File No. 160944 Committee Item No. 1
Board Item No. 12

COMMITTEE/BOARD OF SUPERVISORS

AGENDA PACKET CONTENTS LIST

Committee: Land Use and Transportation **Date** October 31, 2016

Board of Supervisors Meeting **Date** November 15, 2016

Cmte	Board	
☐	☐	Motion
☐	☐	Resolution
☒	☒	Ordinance
☒	☒	Legislative Digest
☐	☐	Budget and Legislative Analyst Report
☐	☐	Youth Commission Report
☐	☐	Introduction Form
☒	☒	Department/Agency Cover Letter and/or Report
☐	☐	Memorandum of Understanding (MOU)
☐	☐	Grant Information Form
☐	☐	Grant Budget
☐	☐	Subcontract Budget
☐	☐	Contract/Agreement
☐	☐	Form 126 - Ethics Commission
☐	☐	Award Letter
☐	☐	Application
☐	☐	Form 700
☐	☐	Vacancy Notice
☐	☐	Information Sheet
☐	☐	Public Correspondence

OTHER (Use back side if additional space is needed)

☒	☒	CEQA Determination
☒	☒	Findings
☒	☒	2016 San Francisco Building Code
☒	☒	Building Inspection Commission Recommendation
☒	☒	2016 California Building Code
☒	☒	2016 International Building Code
☐	☐	
☐	☐	
☐	☐	
☐	☐	

Completed by: Alisa Somera **Date** October 27, 2016
Completed by: Alisa Somera **Date** November 1, 2016

[Building Code - Repeal of Existing 2013 Code and Enactment of 2016 Edition]

Ordinance repealing the 2013 Building Code in its entirety and enacting a 2016 Building Code consisting of the 2016 California Building Code and the 2016 California Residential Code, as amended by San Francisco; adopting environmental findings and findings of local conditions under the California Health and Safety Code; providing for an operative date of January 1, 2017; and directing the Clerk of the Board to forward the legislation to the California Building Standards Commission as required by State law.

NOTE: **Unchanged Code text and uncodified text** are in plain Arial font.
Additions to Codes are in *single-underline italics Times New Roman font*.
Deletions to Codes are in ~~*strikethrough italics Times New Roman font*~~.
Board amendment additions are in double-underlined Arial font.
Board amendment deletions are in ~~strikethrough Arial font~~.
Asterisks (* * * *) indicate the omission of unchanged Code subsections or parts of tables.

Be it ordained by the People of the City and County of San Francisco:

Section 1. Environmental Findings. The Planning Department has determined that the actions contemplated in this ordinance comply with the California Environmental Quality Act (California Public Resources Code Sections 21000 et seq.). Said determination is on file with the Clerk of the Board of Supervisors in File No. 160944 and is incorporated herein by reference. The Board affirms this determination.

Section 2. General Findings.

(a) The State of California adopts a new California Building Standards Code every three years (the "triennial State Code") with supplements published in intervening years. The triennial State Code goes into effect throughout the State of California 180 days after its

publication by the California Building Standards Commission or at a later date established by the Commission.

(b) The California Building Standards Code is contained in Title 24 of the California Code of Regulations. It consists of 12 Parts based upon model codes that are amended by the State agencies with jurisdiction over the subject matter. The California Building Code is Part 2 of Title 24 of the California Code of Regulations; the California Residential Code is Part 2.5. The 2016 California Building Code and 2016 California Residential Code will go into effect throughout California on January 1, 2017.

(c) Local jurisdictions must enforce the California Building Standards Code but they may also enact more restrictive building standards that are reasonably necessary because of local conditions caused by climate, geology, or topography. Local amendments may be made to a triennial State Code and also throughout the intervening years. However, local amendments previously adopted are not automatically applicable to a new triennial State Code. Rather, they must be re-enacted with the required findings of local conditions, expressly made applicable to the new triennial State Code, and with an operative date no earlier than the effective date of the new State Code.

(d) As in past triennial State Code adoption cycles, by this ordinance the Board of Supervisors repeals the 2013 San Francisco Building Code in its entirety, enacts the 2016 San Francisco Building Code, and re-enacts the existing local amendments and makes them applicable to the 2016 California Building Code. Incorporation of the 2016 California Residential Code with local amendments into the 2016 San Francisco Building Code is as described in a separate companion ordinance.

(e) Pursuant to Charter Section D3.750-5, the Building Inspection Commission considered and approved San Francisco's amendments to the 2016 California Building Code at a duly noticed public hearing that was held on August 17, 2016.

Section 3. Findings regarding Local Conditions.

(a) California Health and Safety Code Sections 17958.7 and 18941.5 provide that before making any changes or modifications to the California Building Code and any other applicable provisions published by the California Building Standards Commission, the governing body must make an express finding that each such change or modification is reasonably necessary because of specified local conditions. The local amendments together with the required findings must be filed with the California Building Standards Commission before the local changes or modifications can go into effect.

(b) The City and County of San Francisco is unique among California communities with respect to local climatic, geological, topographical, and other conditions. A specific list of findings that support San Francisco's modifications to the 2016 California Building Code, with a section-by-section correlation of each modification with a specific numbered finding, are contained in Exhibit A entitled "Standard Findings for San Francisco Building Standards Code Amendments."

(c) Pursuant to California Health and Safety Code Sections 17958.7 and 18941.5, the Board of Supervisors finds and determines that the local conditions described in Exhibit A constitute a general summary of the most significant local conditions giving rise to the need for modification of the 2016 California Building Code provisions published by the California Building Standards Commission. The Board of Supervisors further finds and determines that the proposed modifications are reasonably necessary based upon the local conditions set forth in Exhibit A.

Section 4. Repeal of 2013 San Francisco Building Code and Enactment of the 2016 San Francisco Building Code.

(a) The 2013 San Francisco Building Code is hereby repealed in its entirety. The San Francisco Building Code being repealed was enacted on November 5, 2013, by Ordinance Nos. 254-13 and 255-13, with an operative date of January 1, 2014. It was amended by Ordinances 043-14, 046-14, 063-14, 164-14, 169-14, 182-14, 202-14, 224-14, 032-15, 070-15, 159-15, 208-15, 014-16, 023-16, 051-16, 059-16, 060-16, 067-16, and 165-16. These ordinances are available on the website of the Board of Supervisors.

(b) The 2016 San Francisco Building Code is hereby enacted. It consists of (1) the 2016 California Building Code, (2) the 2016 California Residential Code, and (3) San Francisco's existing local amendments which are re-enacted and expressly made applicable to said 2016 California Codes. Copies of the 2016 California Building Code and the stand-alone San Francisco amendments to the 2016 California Building Code and 2016 California Residential Code are declared to be part of Board File No. 160944 and are incorporated into this ordinance by reference as though fully set forth. Additions to the 2016 California Building Code and 2016 California Residential Code are shown in bold underlined type; deletions are shown with bold strikethrough type. Incorporation of the 2016 California Residential Code with local amendments into the 2016 San Francisco Building Code is as described in a separate companion ordinance.

Section 5. Continuance of Actions Under Prior Code. Nothing contained in this ordinance shall be construed as abating any action now pending under or by virtue of any ordinance of the City and County of San Francisco hereby repealed, nor shall this ordinance be construed as discontinuing, abating, modifying or altering any penalties accruing, or to accrue, or as waiving any right of the City under any such ordinance.

Section 6. Severability. If any section, subsection, sentence, clause, or phrase of this ordinance is, for any reason, held to be invalid, such decision shall not affect the validity of the remaining portions of this ordinance. The Board of Supervisors hereby declares that it would have passed this ordinance, and each section, subsection, sentence, clause, or phrase of this Ordinance, irrespective of the fact that any one or more sections, subsections, sentences, clauses, or phrases be declared invalid.

Section 7. Effective and Operative Dates. This ordinance shall become effective 30 days after enactment. Enactment occurs when the Mayor signs the ordinance, the Mayor returns the ordinance unsigned or does not sign the ordinance within ten days of receiving it, or the Board of Supervisors overrides the Mayor's veto of the ordinance. This ordinance shall take effect and be in full force on and after either January 1, 2017 or its effective date if the effective date is later.

Section 8. Directions to Clerk. Upon final passage of this ordinance, the Clerk of the Board of Supervisors is hereby directed to transmit this ordinance with the Exhibit A attachment and the San Francisco modifications to the 2016 California Building Code and the 2016 California Residential Code to the California Building Standards Commission pursuant to the applicable provisions of State law.

APPROVED AS TO FORM:
DENNIS J. HERRERA, City Attorney

By: Judith A. Boyajian
JUDITH A. BOYAJIAN
Deputy City Attorney
n:\land\as2016\1600669\01129814.docx

FILE NO. 160944

LEGISLATIVE DIGEST

[Building Code - Repeal of Existing 2013 Code and Enactment of 2016 Edition]

Ordinance repealing the 2013 Building Code in its entirety and enacting a 2016 Building Code consisting of the 2016 California Building Code and the 2016 California Residential Code, as amended by San Francisco; adopting environmental findings and findings of local conditions under the California Health and Safety Code; providing for an operative date of January 1, 2017; and directing the Clerk of the Board to forward the legislation to the California Building Standards Commission as required by State law.

Existing Law

The Building Code regulates and controls the design, construction, quality of materials, use and occupancy, location, maintenance and demolition of all buildings and structures, and quarrying, grading, excavation and filling of land. The current San Francisco Building Code consists of the 2013 California Building Code (which incorporates the 2012 International Building Code), the 2013 California Residential Code (which incorporates the 2012 International Residential Code), and San Francisco's local amendments to those California Codes ("San Francisco Amendments"). Chapter 36 of the San Francisco Building Code serves as a directory of where the provisions of the California Residential Code may be found in the San Francisco Building Code.

Amendments to Current Law

On January 1, 2017, a 2016 California Building Code and 2016 California Residential Code ("California Codes") will go into effect throughout the State. The San Francisco Amendments to the 2013 editions of these California Codes must be re-enacted and made applicable to the 2016 California Codes. Therefore, as in past State Code adoption cycles, San Francisco will repeal its existing Building Code in its entirety and adopt a new Building Code consisting of the new model code, as amended by the State of California, and as further amended by San Francisco. The San Francisco Amendments to the 2013 California Codes will be carried forward and made applicable to the 2016 California Codes with no or only minor technical changes.

The San Francisco Amendments are not integrated into the text of the California Codes but rather are separately printed in a stand-alone document. Therefore, the user must consult both texts in order to determine the complete code requirement. In the San Francisco Amendments, additions to the 2016 California Codes are shown in bold type; deletions are shown with strikethrough.

Background Information

The State of California adopts a new California Building Standards Code every three years (the "triennial State Code") with supplements published in intervening years. The triennial State Code goes into effect throughout the State 180 days after its publication by the California Building Standards Commission or at a later date established by the Commission. In the current triennial State Code adoption cycle, the California Building Standards Code will go into effect on January 1, 2017. The California Building Standards Code is contained in Title 24 of the California Code of Regulations, and consists of several parts that are based upon model codes with amendments made by the State agencies with jurisdiction over the subject matter. The California Building Code is Part 2 of Title 24 of the California Code of Regulations; the California Residential Code is Part 2.5.

Local jurisdictions must enforce the California Building Standards Code but they may also enact more restrictive building standards that are reasonably necessary because of local conditions caused by climate, geology, or topography. Local amendments may be made to a triennial State Code and also throughout the intervening years. However, local amendments previously adopted are not automatically applicable to a new triennial State Code. Rather, they must be re-enacted with the required findings of local conditions, expressly made applicable to the new triennial State Code, and with an operative date no earlier than the effective date of the new State Code.

n:\legana\as2016\1600669\01131480.doc

BOARD of SUPERVISORS

City Hall
Dr. Carlton B. Goodlett Place, Room 244
San Francisco 94102-4689
Tel. No. 554-5184
Fax No. 554-5163
TDD/TTY No. 554-5227

October 6, 2016

Lisa Gibson
Acting Environmental Review Officer
Planning Department
1650 Mission Street, Ste. 400
San Francisco, CA 94103

Dear Ms. Gibson:

On September 6, 2016, Building Inspection Commission introduced the following proposed legislations:

File No. 160944
Ordinance repealing the 2013 Building Code in its entirety and enacting a 2016 Building Code consisting of the 2016 California Building Code and the 2016 California Residential Code, as amended by San Francisco; adopting environmental findings and findings of local conditions under the California Health and Safety Code; providing for an operative date of January 1, 2017; and directing the Clerk of the Board to forward the legislation to the California Building Standards Commission as required by State law.

File No. 160945
Ordinance adding the provisions of the 2016 California Residential Code with local amendments into various chapters of the 2016 San Francisco Building Code, and adding Chapter 36 to the Building Code to serve as a directory of where such provisions may be found; adopting environmental findings and findings of local conditions under the California Health and Safety Code; providing for an operative date of January 1, 2017; and directing the Clerk of the Board to forward the legislation to the California Building Standards Commission as required by State law.

File No. 160946
Ordinance repealing the 2013 Electrical Code in its entirety and enacting a 2016 Electrical Code consisting of the 2016 California Electrical Code as amended by San Francisco; adopting environmental findings and findings of local conditions under the California Health and Safety Code; providing an operative date of January 1, 2017; and directing the Clerk of the Board of Supervisors to forward the legislation to the California Building Standards Commission as required by State law.

File No. 160947
Ordinance enacting a 2016 San Francisco Existing Building Code consisting of the 2016 California Existing Building Code with San Francisco amendments; adopting environmental findings and findings of local conditions under the California Health and Safety Code; providing for an operative date of January 1, 2017; and directing the Clerk of the Board to forward the legislation to the California Building Standards Commission as required by State law.

File No. 160948
Ordinance repealing the 2013 Green Building Code in its entirety and enacting a 2016 Green Building Code consisting of the 2016 California Green Building Standards Code as amended by San Francisco; adopting environmental findings and findings of local conditions under the California Health and Safety Code; providing for an operative date of January 1, 2017; and directing the Clerk of the Board of Supervisors to forward the legislation to the California Building Standards Commission as required by State law.

File No. 160949
Ordinance repealing the 2013 Mechanical Code in its entirety and enacting a 2016 Mechanical Code consisting of the 2016 California Mechanical Code as amended by San Francisco; adopting environmental findings and findings of local conditions under the California Health and Safety Code; providing an operative date of January 1, 2017; and directing the Clerk of the Board of Supervisors to forward the legislation to the California Building Standards Commission as required by State law.

File No. 160950
Ordinance repealing the 2013 Plumbing Code in its entirety and enacting a 2016 Plumbing Code consisting of the 2016 California Plumbing Code as amended by San Francisco; adopting environmental findings and findings of local conditions under the California Health and Safety Code; providing an operative date of January 1, 2017; and directing the Clerk of the Board of Supervisors to forward the legislation to the California Building Standards Commission as required by State law.

This legislation is being transmitted to you for environmental review.

Angela Calvillo, Clerk of the Board

By: Alisa Somera, Legislative Deputy Director
Land Use and Transportation Committee

Not defined as a project under CEQA Guidelines Sections 15378 and 15060(c)(2) because they do not result in a physical change in the environment.

Attachment

c: Joy Navarrete, Environmental Planning
Jeanie Poling, Environmental Planning

Joy Navarrete Digitally signed by Joy Navarrete DN: cn=Joy Navarrete, o=Planning, ou=Environmental Planning, email=joy.navarrete@sfgov.org, c=US Date: 2016.10.20 15:03:12 -07'00'

Proposed 2016 San Francisco Building/Existing Building/Electrical/Plumbing/Mechanical/Green Building Code Amendment Correction List

PROPOSED 2016 SAN FRANCISCO BUILDING CODE AMENDMENTS CORRECTIONS	
Section No.	**Correction**
102A.3.1	Duplicated text and section number have been deleted.
202	Story, First in Section 202 has been deleted.
406.3	Section number of 406.3 and a typo in the text have been corrected
1012.2	Exception number in Section 1012.2 has been corrected.
1016.2	Item number has been corrected.
1207	Section numbers in 1207 has been corrected.
Finding Table Section No.	**Correction**
102A.4.1	Section 102A.4.1 has been deleted in the Finding Table.
102A.4.2	Section 102A.4.2 has been deleted in the Finding Table.
102A.7.1	Section 102A.7.1 has been deleted in the Finding Table.
102A.7.2	Section 102A.7.2 has been deleted in the Finding Table.
102A.7.3	Section 102A.7.3 has been deleted in the Finding Table.
102A.10	Section 102A.10 has been deleted in the Finding Table.
103A.5	Section 103A.5 has been added to the Finding Table.
106A.1.14	Section 106A.1.14 has been added to the Finding Table.
106A.3.1	Section 106A.3.1 has been added to the Finding Table.
1011.5.5.1	Section 1011A.5.5.1 has been added to the Finding Table.
Chapter 11D	Chapter 11D has been added to the Finding Table.
1207	Section 1207 has been corrected in the Finding Table.
1312A.1	A typo in Section 1312A.1 has been corrected.
1510.10	Section 1510.10 has been corrected.
1705.1.1	Section 1705.1.1has been added to the Finding Table.
PROPOSED 2016 SAN FRANCISCO EXISTING BUILDING CODE AMENDMENTS CORRECTIONS	
Section No.	**Correction**
301.2.1	The reference in this section has been corrected to Section 403.
407.4.1	Section 407.4.1 has been corrected.
Finding Table Section No.	**Correction**
326.4.1	Section 326.4.1 has been added to the Finding Table.
326.4.2	Section 326.4.2 has been added to the Finding Table.
404D.2.1	Section 404D.2.1 has been added to the Finding Table.
Table 4D-A	Table 4D-A has been added to the Finding Table.

Table 403E	Table 403E has been added to the Finding Table.
PROPOSED 2016 SAN FRANCISCO PLUMBING CODE AMENDMENTS CORRECTIONS	
Section No.	**Correction**
1101.2.3	The reference has been corrected to 1101.2.2
Finding Table Section No.	**Correction**
603.3	Section 603.3 has been added in the Finding Table.
PROPOSED 2016 SAN FRANCISCO ELECTRICAL CODE AMENDMENTS CORRECTIONS	
Section No.	**Correction**
89.117. (A)	A parenthesis on the left side has been added.
230.43	Section 230.43 has been corrected by deleting the word "general" in the State language
230.71	Section 230.71 has been corrected by deleting the old San Francisco amendment.
330.12	Section 330.12 has been corrected by changing "Revise Item (1)"
411.5	A comma has been added in the text.
700.16	Change to "Revise the first paragraph of this section as follows".
760.46	Editor's Note has been deleted.
Finding Table Section No.	**Correction**
210.5(C)(1)(a)	Section 210.5(C)(1)(a) has been corrected in the Finding Table.
215.12(C)(a)	Section 215.12(C)(a) has been corrected in the Finding Table.
330.12	Section 330.12 has been added in the Finding Table.
355.10(A)	Section 355.10(A) has been corrected in the Finding Table.
PROPOSED 2016 SAN FRANCISCO MECHANICAL CODE AMENDMENTS CORRECTIONS	
Finding Table Section No.	**Correction**
101.2	Section 101.2 has been deleted in the Finding Table.
PROPOSED 2016 SAN FRANCISCO GREEN BUILDING CODE AMENDMENTS CORRECTIONS	
Section No.	**Correction**
Chapter 4	The title of Chapter 4 has been corrected.
Chapter 5	The title of Chapter 5 has been corrected.
Finding Table Section No.	**Correction**

4.201.1	Section 4.201.1 in the Finding Table has been deleted.
5.101.1	Section 5.101.1in the Finding Table has been deleted.
5.201.1.2	Section 5.201.1.2 has been added to the Finding Table.

2016 San Francisco Building Code Findings Including Building and Residential Standards

Chapter 1A

Section #	Finding #	Section #	Finding #	Section #	Finding #
101A	9	105A.1.1	9	106A.3.4	9
101A.1	9	105A.1.1.1	9	106A.3.4.1	9
101A.2	9	105A.1.1.2	9	106A.3.4.2	9
101A.3	9	105A.1.1.3	9	106A.3.5	9
101A.3.1	9	105A.1.1.4	9	106A.3.6	9
101A.4	9	105A.1.2	9	106A.3.7	9
101A.4.1	9	105A.1.3	9	106A.3.8	9
101A.4.2	9	105A.1.4	9	106A.3.8.1	9
101A.5	9	105A.1.5	9	106A.4	9
101A.6	9	105A.1.5.1	9	106A.4.1	9
101A.7	9	105A.1.5.2	9	106A.4.1.1	9
101A.7.1	9	105A.1.5.3	9	106A.4.1.2	9
101A.7.2	9	105A.1.5.4	9	106A.4.1.2.1	9
101A.7.3	9	105A.1.6	9	106A.4.1.2.2	9
101A.8	Reserved	105A.1.7	9	106A.4.1.2.3	9
101A.9	Reserved	105A.1.8	9	106A.4.1.2.4	9
101A.10	Reserved	105A.1.9	9	106A.4.1.3	9
101A.11	Reserved	105A.1.10	9	106A.4.1.3.1	9
101A.12	Reserved	105A.1.11	9	106A.4.1.3.2	9
101A.13	Reserved	105A.1.12	9	106A.4.1.3.3	9
101A.14	Reserved	105A.2	9	106A.4.1.3.4	9
101A.15	Reserved	105A.2.1	9	106A.4.1.4	9
101A.16	Reserved	105A.2.2	9	106A.4.1.4.1	9
101A.17	Reserved	105A.2.3	9	106A.4.1.4.2	9
101A.18	Reserved	105A.2.4	9	106A.4.1.4.3	9
101A.19	Reserved	105A.2.5	9	106A.4.1.4.4	9
101A.20	9	105A.2.6	9	106A.4.1.4.5	9
101A.21	9	105A.2.7	9	106A.4.1.4.6	9
101A.21.1	9	105A.2.8	9	106A.4.2	9
101A.21.2	9	105A.2.8.1	9	106A.4.3	9
101A.21.3	9	105A.2.8.2	9	106A.4.4	9
102A	9	105A.2.8.3	9	106A.4.4.1	9
102A.1	9	105A.2.8.4	9	106A.4.4.2	9

160944 & 160945

Section #	Finding #	Section #	Finding #	Section #	Finding #
102A.2	9	105A.2.8.5	9	106A.4.5	9
102A.2.1	9	105A.2.8.6	9	106A.4.6	9
102A.2.2	9	105A.2.8.7	9	106A.4.7	9
102A.3	9	105A.2.8.8	9	106A.4.8	9
102A.3.1	9	105A.2.8.9	9	106A.4.9	9
102A.4	9	105A.2.9	9	106A.4.10	9
102A.5	9	105A.2.10	9	106A.4.11	9
102A.6	9	105A.3	9	106A.4.12	9
102A.7	9	105A.3.1	9	106A.4.13	9
102A.8	9	105A.3.2	9	107A.	9
102A.11	9	105A.3.3	9	107A.1	9
102A.11.1	9	105A.3.4	9	107A.1.2	9
102A.11.2	9	105A.3.4.1	9	107A.2	9
102A.11.3	9	105A.3.5	9	107A.3	9
102A.12	9	105A.3.6	9	107A.3.1	9
102A.13	9	105A.3.7	9	107A.3.2	9
102A.14	9	105A.3.8	9	107A.3.3	9
102A.15	9	105A.3.9	9	107A.3.4	9
102A.16	9	105A.3.10		107A.4	9
102A.17	9	105A.4	9	107A.5	9
102A.18, 102A.18.1	9 9	105A.4.1	9	107A.6	9
102A.18.2	9	105A.4.2	9	107A.6.1	9
102A.19	9	105A.4.3	9	107A.6.2	9
102A.19.1	9	105A.4.3.1	9	107A.7	9
102A.19.2	9	105A.4.4	9	107A.7.1	9
102A.19.3	9	105A.4.4.1	9	107A.7.2	9
102A.19.4	9	105A.4.4.2	9	107A.7.2A	9
102A.19.5	9	105A.4.4.3 105A.5	9 Reserved	107A.7.3	9
102A.20	9	105A.6.	9	107A.8	9
103A	9	105A.6.1	9	107A.9	9
103A.1	9	105A.6.2	9	107A.10	9
103A.2	9	105A.6.3	9	107A.11	9
103A.2.1	9	105A.8	9	107A.11.1	9
103A.2.2	9	106A	9	107A.11.2	9
103A.3	9	106A.1	9	107A.12	9
103A.3.1	9	106A.1.1	9	107A.13	9
103A.3.2	9	106A.1.2	9	107A.13.1	9
103A.3.3	9	106A.1.3	9	107A.13.2	9

Section #	Finding #	Section #	Finding #	Section #	Finding #
103A.3.4	9	106A.1.3.1	9	107A.13.3	9
103A.3.5	9	106A.1.4	9	107A.13.3.1	9
103A.4	9	106A.1.4.1	9	107A.13.3.1.1	9
103A.4.1	9	106A.1.4.2	9	107A.13.3.2	9
103A.4.2	9	106A.1.5	9	107A.13.4	9
103A.4.3	9	106A.1.6	9	107A.13.5	9
103A.4.4	9	106A.1.6.1	9	107A.13.6	9
103A.4.5	9	106A.1.7	9	107A.13.7	9
103A.4.5.1	9	106A.1.8	9	107A.13.8	9
103A.4.5.2	9	106A.1.9	9	107A.13.9	9
103A.4.5.3	9	106A.1.9.1	9	107A.13.9.1	9
103A.4.6	9	106A.1.9.2	9	107A.13.9.2	9
103A.4.7	9	106A.1.9.3	9	107A.13.10	9
103A.5	9	106A.1.10	9	107A.13.11	9
103A.5.1	9	106A.1.10.1	9	107A.13.12	9
103A.5.2	9	106A.1.10.2	9	107A.13.13	9
103A.5.3	9	106A.1.10.3	9	107A.13.14	9
103A.5.4	9	106A.1.11	9	107A.13.15	9
103A.5.5	9	106A.1.12	9	108A	9
103A.5.6	9	106A.1.13	9	108A.1	9
104A	9	106A.1.14	9	108A.2	9
104A.1	9	106A.1.14.1	9	108A.3	9
104A.2	9	106A.1.14.2	9	108A.3.1	9
104A.2.1	9	106A.1.14.3	9	108A.3.2	9
104A.2.2	9	106A.1.14.4	9	108A.4	9
104A.2.3	9	106A.1.14.5	9	108A.5	9
104A.2.4	9	106A.2	9	108A.5.1	9
104A.2.5	9	106A.3.1	9	108A.5.2	9
104A.2.6	9	106A.3.1.1	9	108A.5.3	9
104A.2.7	9	106A.3.1.2	9	108A.5.4	9
104A.2.7.1	9	106A.3.1.3	9	108A.5.5	9
104A.2.8	9	106A.3.2	9	108A.5.6	9
104A.2.8.1	9	106A.3.2.1	9	108A.5.7	9
104A.2.8.3	9	106A.3.2.2	9	108A.5.8	9
104A.2.9	9	106A.3.2.2.1	9	108A.5.9	9
104A.2.10	9	106A.3.2.2.2	9	108A.6	9
104A.2.11	9	106A.3.2.3	9	108A.7	9
104A.3	9	106A.3.2.4	9	108A.7.1	9
104A.3.1	9	106A.3.2.4.1	9	108A.8	9

160944 & 160945

Section #	Finding #	Section #	Finding #	Section #	Finding #
104A.3.2	9	106A.3.2.4.2	9	109A	9
104A.4	9	106A.3.2.4.3	9	109A.1	9
104A.4.1	9	106A.3.2.4.4	9	109A.2	9
104A.4.2	9	106A.3.2.5	9	109A.3	9
104A.5	9	106A.3.2.5.1	9	109A.4	9
104A.6	9	106A.3.2.5.2	9	109A.5	9
104A.6.1	9	106A.3.2.5.3	9	109A.6	9
104A.6.2	9	106A.3.2.5.4	9	109A.7	9
104A.6.3	9	106A.3.2.6	9	109A.8	9
105A	9	106A.3.2.6.1	9	110A.	9
105A.1	9	106A.3.2.6.2	9		
		106A.3.2.6.3	9		
		106A.3.2.6.4	9		
		106A.3.2.6.5	9		
		106A.3.2.6.6	9		
		106A.3.2.6.7	9		
		106A.3.2.6.8	9		
		106A.3.3	9		

CHAPTER 2

Section #	Finding #	Section #	Finding #	Section #	Finding #
202	9				

CHAPTER 3
NO S.F. AMENDMENTS

CHAPTER 4

Section #	Finding #	Section #	Finding #	Section #	Finding #
406.3	5	435.3.5	5		
406.3.7	5	456.1	5		

CHAPTER 5
NO S.F. AMENDMENTS

CHAPTER 6
NO S.F. AMENDMENTS

CHAPTER 7

Section #	Finding #	Section #	Finding #	Section #	Finding #
707.1	5,9				

CHAPTER 7A
NO S.F. AMENDMENTS

CHAPTER 8
NO S.F. AMENDMENTS

CHAPTER 9

Section #	Finding #	Section #	Finding #	Section #	Finding #
901.4	1,2,5	907.2.9.1	2,5		
903.2.8	2,5	907.2.9.5	2,5		
Table 903.2.11.6	2,5	907.2.11.6	2,5		

905.3.4	1,2,5	912.7	2,5		

CHAPTER 10

Section #	Finding #	Section #	Finding #	Section #	Finding #
1010.1.2	3	1011.12.3	3	1015.4	3
1011.5.5	3	1012.2	3	1016.2	3
1011.5.5.1	3	1013.1	3,5	1016.3	3
1011.12	3				

CHAPTER 10A

Section #	Finding #	Section #	Finding #	Section #	Finding #
1001A.	9	1003A.6	5	1005A.5	5
1001A.1	9	1003A.7	5	1005A.6	5
1001A.2	9	1003A.8	5	1005A.7	5
1001A.3	9	1004A.	5	1005A.8	5
1002A.	9	1004A.1	5	1005A.8.1	5
1003A.	5	1004A.2	5	1005A.8.2	5
1003A.1	5	1004A.3	5	1005A.8.3	5
1003A.2	5	1004A.4	5	1005A.8.4	5
1003A.2.1	5	1005A.	5	1005A.8.5	5
1003A.2.2	5	1005A.1	5	1005A.8.6	5
1003A.3	5	1005A.2	5	1005A.8.7	5
1003A.4	5	1005A.3	5	1005A.8.8	5

1003A.5	5	1005A.4	5		
		1005A.4.1	5		

CHAPTER 11
[RESERVED]

CHAPTER 11A
NO S.F. AMENDMENTS

CHAPTER 11B
NO S.F. AMENDMENTS

CHAPTER 11C
NO S.F. AMENDMENTS

CHAPTER 11D

Section #	Finding #	Section #	Finding #	Section #	Finding #
1101D	6,9	1105D.1	6,9	1107D	6,9
1101D.1	6,9	1105D.2	6,9	1108D	6,9
1101D.2	6,9	1105D.2.1	6,9	1109D	6,9
1102D	6,9	1105D.3	6,9	1110D	6,9
1103D	6,9	1106D	6,9	1111D	6,9
1104D	6,9	1106D.1	6,9	1112D	6,9
1104D.1	6,9	1106D.1.1	6,9	1113D	6,9
1104D.2	6,9	1106D.2	6,9	1113D.1	6,9
1104D.3	6,9	1106D.3	6,9	1113D.2	6,9
1104D.4	6,9	1106D.4	6,9	1114D	6,9
1105D	6,9	1106D.5	6,9	1115D	6,9

CHAPTER 12

Section #	Finding #	Section #	Finding #	Section #	Finding #
1203.5	5	1207.6	9	1207.8	4
1203.6	5	1207.7	4	1207.9	4
1205.1	5	1207.7.1	4	1207.10	4
1205.2.2	5	1207.7.2	4	1208.4	4,9
1205.4	5	1207.7.3	4		

CHAPTER 13
NO S.F. AMENDMENTS

CHAPTER 13A

Section #	Finding #	Section #	Finding #	Section #	Finding #
1301A	9	1307A.1	9	1312A.1	9
1302A	9	1308A	9	1312A.2	9
1303A	9	1308A.1	9	1313A	9
1304A	9	1309A	9	1313A.1	9
1304A.1	9	1309A.1	9	1313A.2	9
1304A.2	9	1310A	9	1313A.3	9
1305A	9	1310A.1	9	1313A.4	9
1305A.1	9	1311A	9	1313A.5	9
1306A	9	1311A.1	9	1314A.	9
1306A.1 1306A.1.1	9 9	1311A.2	9	1314A.1	9

1306A.2	9	1311A.3	9	1314A.2	9
1306A.2.1	9	1311A.4	9	1314A.3	9
1306A.2.2	9	1311A.4.1	9	1314A.4	9
1306A.3	9	1311A.4.2	9	1314A.5	9
1307A	9	1312A	9	1314A.6	9

CHAPTER 13B

Section #	Finding #	Section #	Finding #	Section #	Finding #
1301B.	9	1303B.	9	1305B.	9
1302B.	9	1304B.	9		

CHAPTER 13C
RESERVED

CHAPTER 13D

Section #	Finding #	Section #	Finding #	Section #	Finding #
1301D	9	1305D.1	9	1307D	9
1302D	9	1305D.2	9	1308D	9
1303D	9	1306D	12	1309D	9
1304D	9	1306D.1	5,12,15	1310D	9
1305D	9	1306D.2	12	1311D	9

CHAPTER 14

Section #	Finding #	Section #	Finding #	Section #	Finding #
1403.8	3,5,7				

CHAPTER 15

Section #	Finding #	Section #	Finding #	Section #	Finding #
1501.1	7	1505.1	1,2,3,5	1507.9	1,2,3,5

1503.4	7	Table 1505.1	1,2,3,5	1510.2.2	5
		1507.8	1,2,3,5	1510.10	5

CHAPTER 16

Section #	Finding #	Section #	Finding #	Section #	Finding #
1604.11	9			Table 1607.1	1,9

CHAPTER 16A
NO S.F. AMENDMENTS

CHAPTER 17

Section #	Finding #	Section #	Finding #	Section #	Finding #
1704.2	1,4,5	1705.4.4	1,4,5	1705.21	5
1705.1.1	1	1705.5.4	1,4,5	1705.22	5
1705.4.3	1,4,5	1705.19	1,4,5		
		1705.20	1,4,5		

CHAPTER 17A
NO S.F. AMENDMENTS

CHAPTER 18
NO S.F. AMENDMENTS

CHAPTER 18A
NO S.F. AMENDMENTS

CHAPTER 19
NO S.F. AMENDMENTS

CHAPTER 19A

NO S.F. AMENDMENTS

CHAPTER 20
NO S.F. AMENDMENTS

CHAPTER 21
NO S.F. AMENDMENTS

CHAPTER 21A
NO S.F. AMENDMENTS

CHAPTER 22
NO S.F. AMENDMENTS

CHAPTER 22A
NO S.F. AMENDMENTS

CHAPTER 23

Section #	Finding #	Section #	Finding #	Section #	Finding #
2304.12.1.5	8	2304.12.2.3	8		
2304.12.3.2	8				

CHAPTER 24

Section #	Finding #	Section #	Finding #	Section #	Finding #
2405.3	[CRC R308.6.6]				

CHAPTER 25
NO S.F. AMENDMENTS

CHAPTER 26

Section #	Finding #	Section #	Finding #	Section #	Finding #
2603.3	5	2603.6	5		
2603.4.1.5	5				

CHAPTER 27
NO S.F. AMENDMENTS

CHAPTER 28
NO S.F. AMENDMENTS

CHAPTER 29
NO S.F. AMENDMENTS

CHAPTER 30

Section #	Finding #	Section #	Finding #	Section #	Finding #
3010.1	9	3010.2	9		

CHAPTER 31

Section #	Finding #	Section #	Finding #	Section #	Finding #
3103.1.1	9	3107.3	4,6	3107.7	9
3107	9	3107.4	1,2,5,8	3112	9
3107.1	9	3107.5	1,2,5,8	3112.1	9
3107.1.1	9	3107.5.1	1,2,5,8	3112.2	9
3107.1.2	9	3107.5.2	1,2,5,8	3112.3	9
3107.1.3	9	3107.5.3	1,2,5,8	3112.4	9
3107.1.4	9	3107.5.4	1,2,5,8	3112.5	9
3107.1.5	9	3107.6	8		
3107.2	9	3107.6.1	8		
		3107.6.2	8		

CHAPTER 31A RESERVED
NO S.F. AMENDMENTS

CHAPTER 31B
NO S.F. AMENDMENTS

CHAPTER 31C
NO S.F. AMENDMENTS

CHAPTER 31D
NO S.F. AMENDMENTS

CHAPTER 31E RESERVED
NO S.F. AMENDMENTS

CHAPTER 31F
NO S.F. AMENDMENTS

CHAPTER 32

Section #	Finding #	Section #	Finding #	Section #	Finding #
3201.4	7	3203.2	2,4,5,6	3203.2.5	2,4,5,6
3202.3.1	6,7	3203.2.1	2,4,5,6	3203.3	2,4,5,6
3202.3.2	2,4,6	3203.2.2	2,4,5,6		
3202.3.4	3,5	3203.2.3	2,4,5,6		
3203.1	2,5	3203.2.4	2,4,5,6		

CHAPTER 33

Section #	Finding #	Section #	Finding #	Section #	Finding #
3302.4	5,6	3304.1	9	3306.12	5,6
3303.1.1	5,6	3306.10	5,6	3307.1	5,6
3303.1.2	5,6	3306.11	5,6	3311.2	5,6
3303.4	5,6				

3303.8	5,6				

CHAPTER 34
NO S.F. AMENDMENTS

CHAPTER 35
NO S.F. AMENDMENTS

CHAPTER 36
(Index to California Residential Code Provisions)

Section #	Finding #	Section #	Finding #	Section #	Finding #
CHAPTER 1	9	CHAPTER 6	1,2,3,4,5,7,8,9,10	CHAPTER44	9
CHAPTER 2	9	CHAPTER 7	1,2,3,4,5,7,8,9,10	APPENDIX H	N/A
CHAPTER 3	1,2,3,4,5,7,8,9,10	CHAPTER 8	1,2,3,4,5,7,8,9,10	APPENDIX R	1,2,3,4,5,7,8,9,10
CHAPTER 4	1,2,3,4,5,7,8,9,10	CHAPTER 9	1,2,3,4,5,7,8,9,10		
CHAPTER 5	1,2,3,4,5,7,8,9,10,	CHAPTER 10	1,2,3,4,5,7,8,9,10		

APPENDIX J

Section #	Finding #	Section #	Finding #	Section #	Finding #
J103	9	J104.3	1,4	J109	7
J103.2	9	J106	7	J109.5	7
J104	1,4	J106.1	7	J112	9

2016
San Francisco Building Code

Amendments to the

2016 California Building Code
2016 California Residential Code

Operative date: January 1, 2017

PROPOSED SAN FRANCISCO BUILDING CODE AMENDMENTS 2016 Edition

Chapter 1
SCOPE AND ADMINISTRATION

Division I
CALIFORNIA ADMINISTRATION

No San Francisco Building Code Amendments.

Division II
SCOPE AND ADMINISTRATION

See Chapter 1A for the Administration provisions of the San Francisco Building Code.

Chapter 1A
SAN FRANCISCO ADMINISTRATION

The City and County of San Francisco adopts the following Chapter 1A for the purpose of administration of the ~~2013~~ 2016 San Francisco Building Code. Certain specific administrative and general code provisions as adopted by various state agencies may be found in Chapter 1, Divisions I and II of this code.

SECTION 101A – TITLE, SCOPE AND GENERAL

101A.1 Title. These regulations shall be known as the "~~2013~~ 2016 San Francisco Building Code," may be cited as such and will be referred to herein as "this code." The ~~2013~~ 2016 San Francisco Building Code amends the ~~2013~~ 2016 California Building Code and the ~~2013~~ 2016 California Residential Code which is Part 2 & 2.5 respectively of the 12 parts of the official compilation and publication of the adoption amendment and repeal of the building regulations to the California Code of Regulations, Title 24, also referred to as the California Building Standards Code. The California Building Code and California Residential Code incorporates by adoption the ~~2012~~ 2015

International Building Code and ~~2012~~ 2015 International Residential Code respectively of the International Code Council with necessary California amendments.

101A.2 Purpose. The purpose of this code is to establish the minimum requirements to safeguard the public health, safety and general welfare through structural strength, means of egress facilities, stability, access to persons with disabilities, sanitation, adequate lighting and ventilation and energy conservation, and safety to life and property from fire and other hazards attributed to the built environment; to regulate and control the demolition of all buildings and structures, and the quarrying, grading, excavation, and filling of land; and to provide safety to fire fighters and emergency responders during emergency operations.

The further purpose of this code is to ensure that barrier-free design is incorporated in all buildings, facilities, site work and other developments to which this code applies and to ensure that they are accessible to and usable by persons with disabilities.

101A.3 Scope. The provisions of this code shall apply to the construction, alteration, movement, enlargement, replacement, repair, equipment, use and occupancy, location, maintenance, removal and demolition of every building or structure or any appurtenances connected or attached to such buildings or structures.

101A.3.1 Non-state-regulated buildings, structures and applications. Except as modified by local ordinance pursuant to Section 1.1.8, the following standards in the California Code of Regulations, Title 24, Parts 2, 2.5, 3, 4, 5, 6, 9, 10, and 11 shall apply to all occupancies and applications not regulated by a state agency.

101A.4 Effective Date of this code.

101A.4.1 Only those standards approved by the California Building Standards Commission and code amendments, additions or deletions adopted by the City and County of San Francisco that are effective at the time an application for building permit is deemed acceptable for building plan review by the Department of Building Inspection shall apply to the plans and specifications for, and to the construction performed under, that permit. For the effective dates of the provisions contained in this code, see History Notes page of this code.

101A.4.2 Appendices. Provisions contained in the appendices of this code shall not apply unless specifically adopted by a state agency or adopted by a local enforcing agency in compliance with Health and Safety Code Section 18901 et. Seq. for Building Standards Law, Health and Safety Code Section 17950 for State Housing Law and Health and Safety Code Section 13869.7 for Fire Protection Districts.

101A.5 Validity. If any chapter section, subsection, sentence, clause or phrase of this code is for any reason held to be unconstitutional, contrary to statute, exceeding the authority of the state as stipulated by statutes, or otherwise inoperative, such decision shall not affect the validity of the remaining portion of this code.

101A.6 Reference Documents. The codes, standards and publications adopted and set forth in this code, including other codes, standards and publications referred to therein are, by title and date of publication, hereby adopted as standard reference documents of this code.

When this code does not specifically cover any subject relating to building design and construction, recognized architectural or engineering practices shall be employed. The National Fire Codes and Fire Protection Handbook of the National Fire Protection Association are permitted to be used as authoritative guides in determining recognized fire-prevention engineering practices.

In the event of any differences between these building standards and the standard reference documents, the text of these building standards shall govern.

101A.7 Order of Precedence.

101A.7.1 Specific provisions. Where a specific provision varies from a general provision, the specific provision shall apply.

101A.7.2 Conflicts. When the requirements of this code conflict with the requirements of any other part of the California Building Standards Code, Title 24, any provision contained elsewhere in the San Francisco Municipal Code, or any regulation or requirement adopted by the Public Utilities Commission or other City agency under its Charter authority, the most restrictive requirement shall prevail.

101A.7.3 Fire Codes. Nothing in these building standards shall diminish the requirements of the state fire marshal.

Sections 101A.8 – 101A.19 are reserved

101A.20 Central Permit Bureau. A Central Permit Bureau is hereby established in the Department of Building Inspection. The Central Permit Bureau shall process applications for permits required in Section 106A.1 of this code and for certain other permits required by ordinance or regulation for other departments and bureaus of the City and County of San Francisco. Permit processing procedures are detailed in an Administrative Bulletin issued by the Building Official in cooperation with other departments and bureaus. The Central Permit Bureau shall arrange for the review of permit applications, the issuance of permits and the collection of fees as fixed by law.

The fees collected by the Central Permit Bureau shall be credited to the account of the department or bureau authorized by ordinance or Charter to approve such permits. The Controller, in conjunction with the Central Permit Bureau and the concerned departments and bureaus, shall analyze the cost to the City and County of San Francisco of regulation and inspection required by each such class of permit and shall propose the rates to be fixed therefor by ordinance, which shall not be less than the cost to the City and County of San Francisco of such regulation and inspection.

101A.21 Safety assessment placards. This section establishes standard placards to be used to indicate the condition of a building or structure after a natural or human-created disaster. A description of the placards to be used is set forth in this Section. The Building Official and their authorized representatives are authorized to post the appropriate placard at each entry point to a building or structure upon completion of a safety assessment. A safety assessment is a visual, nondestructive examination of a building or structure for the purpose of determining the condition for continued occupancy.

101A.21.1 Application of provisions. The provisions of this section are applicable to all buildings and structures of all occupancies regulated by the City and County of San Francisco.

101A.21.2 Description of placards. The Department of Building Inspection shall use the form of standard placards that the Applied Technology Council has recommended and revises from time to time. The actual placards shall be in a form that the Building Official approves. In addition, the ordinance number, the name of the department, its address, and phone number shall be permanently affixed to each placard. In addition, each placard shall include the following language or its equivalent as determined by the Building Official: Any unauthorized removal, alteration, or

covering of this placard shall be considered a violation of the San Francisco Building Code and the responsible person(s) shall be subject to applicable penalties set forth in the code. A general description of the placards is as follows:

1. INSPECTED – LAWFUL OCCUPANCY PERMITTED. This placard is to be posted on any building or structure where no apparent structural hazard has been found. This placard is not intended to mean that there is no damage to the building or structure.

2. RESTRICTED USE. This placard is to be posted on each building or structure that is damaged to such an extent that restrictions on continued occupancy are required. The person or persons authorized to post this placard will note in general terms the type of damage encountered and will note with specificity any restrictions on continued occupancy.

3. UNSAFE – DO NOT ENTER OR OCCUPY. This placard is to be posted on each building or structure that is damaged to such an extent that continued occupancy poses a threat to life safety. Buildings or structures posted with this placard shall not be entered under any circumstance except as authorized in writing by the Building Official of Building Inspection or his or her authorized representative. Authorized safety assessment individuals or teams may enter these buildings at any time. This placard is not to be used or considered to be a demolition order. The person or persons authorized to post this placard will note in general terms the type of damage encountered.

101A.21.3 Removal or alteration prohibited. Once it has been attached to a building or structure, a placard is not to be removed, altered, or covered except by an authorized representative of the Department or upon written notification from the Department. Any unauthorized removal, alteration, or covering of a placard shall be considered a violation of this code and the responsible person(s) shall be subject to the penalties set forth herein.

SECTION 102A – UNSAFE BUILDINGS, STRUCTURES OR PROPERTY

All buildings, structures, property, or parts thereof, regulated by this code that are structurally unsafe or not provided with adequate egress, or that constitute a fire hazard, or are otherwise dangerous to human life, safety or health of the occupants or the occupants of adjacent properties or the public by reason of inadequate maintenance, dilapidation, obsolescence or abandonment, or by reason of occupancy or use in violation of law or ordinance, or were erected, moved, altered, constructed or maintained in violation of law or ordinance are, for the purpose of this chapter, unsafe.

Whenever the Building Official determines by inspection that property or properties either improved or unimproved are unstable because of landslide, subsidence or inundation or that such occurrences are deemed imminent as described above, the Building Official shall give written notice to the owner or owners that said property or properties are unsafe. The notice shall specify the conditions creating the unsafe classification.

All such unsafe buildings, structures, property, or portions thereof, are hereby declared to be public nuisances and shall be vacated, repaired, altered or demolished as hereinafter provided.

102A.1 Fire Hazard. No person, including but not limited to the state and its political subdivisions, operating any occupancy subject to these regulations shall permit any fire hazard, as defined in this section, to exist on premises under their control, or fail to take immediate action to abate a fire hazard when requested to do so by the enforcing agency.

Note: "Fire hazard" as used in these regulations means any condition, arrangement or act which will increase, or may cause an increase of, the hazard or menace of fire to a greater degree

than customarily recognized as normal by persons in the public service of preventing, suppressing or extinguishing fire; or which may obstruct, delay or hinder, or may become the cause of obstruction, delay or hindrance to the prevention, suppression or extinguishment of fire.

102A.2 Authority to Enforce. Subject to other provisions of law, for administration, enforcement, actions, proceedings, abatement, violations and penalties in structures subject to State Housing Law, refer to Health and Safety Code Sections 17910 through 17995.5 and California Code of Regulations, Title 25, Division 1, Chapter 1, Subchapter 1.

102A.2.1 Mobilehome parks and special occupancy parks. Subject to other provisions of law, for administrative, enforcement, actions, proceedings, abatement, inspections and penalties applicable to the Mobilehome Parks Act, refer to California Health and Safety Code, commencing with Section 18200 and California Code of Regulations, Title 25, Division 1, Chapter 2.

102A.2.2 Employee Housing. Subject to other provisions of law, for administrative, enforcement, actions, proceedings, violations and penalties applicable to the Employee Housing Act, refer to Safety Code, Sections 17000 through 17062.5 and California Code of Regulations, Title 25, Division 1, Chapter 1, Subchapter 3.

102A.3 Inspections. The Building Official may inspect or cause the inspection of any building, structure or property for the purpose of determining whether it is unsafe whenever:

(a) The Building Official, with reasonable discretion, determines that such inspection is necessary or desirable; or,

(b) Any person or any agency or department of the City submits to the Building Official a complaint which, in the Building Official's opinion, establishes reasonable cause to believe that the building, structure or property or any portion thereof is unsafe.

102A.3.1. Dwelling Units constructed or installed without required permit(s). In the case of an unauthorized Dwelling Unit constructed or installed in an existing building without the required permit or permits, in addition to the above requirements the written notice of violation shall order the property owner to file an application for a building and other permits required to legalize the unit pursuant to Building Code Section 106A.3.1.3 and Planning Code Section 207.3.

EXCEPTIONS:

1. Removal of the unit has been approved by the Planning Commission pursuant to Planning Code Section 317; or
2. After performing a screening under Section 106A.3.1.3(a) of this Code, the Department has determined that the unauthorized Dwelling Unit is not able to be legalized under Section 106A.3.1.3 of this Code; or
3. The Building Official has determined that a serious and imminent hazard under Section 102A.16 of this Code exists on the subject property.

Upon submission of an application for legalization or removal of an unauthorized Dwelling Unit by the owner or the owner's authorized agent, the Department will suspend a notice of violation issued pursuant to this Section 102A.3.1 pending a decision on the application unless the Building Official has determined that a serious and imminent hazard exists on the property. If approval of either legalization or removal of the unauthorized welling Unit occurs within one year of issuance of the notice of violation, the notice of violation and any liens recorded against the property with respect to the violation will be rescinded. The Building Official may extend this time if a delay in obtaining approval is not the fault of the property owner.

102A.4 Notice of Municipal Code Violation.

(a) When the Building Official observes or otherwise determines any condition which renders the building, structure or property unsafe, the Building Official shall, within 15 days, serve a Notice of Municipal Code Violation ("NOV") upon the building owner. The Building Official shall not issue successive NOVs for the same violation or violations as a means of extending the filing time or the enforcement process or as a means of following up with the building owner.

(b) The NOV shall identify each violation observed or otherwise established, including the violations which render the building, structure or property unsafe, and shall state a deadline for the building owner to abate the violations and a date for reinspection. The NOV shall also set forth the penalties, fees and costs as prescribed in Sections 102A.7(d) and 103A of this code. The NOV shall be a public record subject to disclosure pursuant to Administrative Code Chapter 67.

(c) The Building Official shall mail a copy of the NOV to the building owner by first class mail at the address listed with the Assessor-Recorder's Office. The Building Official shall post the NOV in a conspicuous place on the subject property and make a copy of the NOV available to each tenant of the subject property.

102A.5 Notice of Administrative Hearing.

(a) If the Building Official determines that the building owner has not corrected the code violations by the deadline provided in the NOV, the Building Official shall schedule an administrative hearing on the violations, to be heard within 60 days of the deadline, unless the building owner demonstrates to the Building Official's satisfaction that the building owner has made substantial progress in abating the violations.

(b) The Building Official shall issue a Notice of Administrative Hearing ("Hearing Notice") to the building owner. The Hearing Notice shall state the date, hour and place of the hearing and contain a conspicuous warning setting forth the penalties, fees and costs prescribed in Sections 102A.7(d) and 103A of this Code. The Hearing Notice shall include a copy of the NOV. The Hearing Notice shall inform all interested parties who desire to be heard in the matter that they may appear to show cause why the property, building or structure, or portion thereof, should not be ordered repaired, altered, vacated and repaired or altered, or vacated and demolished.

(c) The Building Official shall serve the Hearing Notice on the building owner by certified mail to the building owner at the address listed with the Assessor-Recorder's Office and shall post the NOV in a conspicuous place on the subject property. The Building Official shall mail the Hearing Notice on the building owner at least 10 days prior to the date set for the hearing.

(d) In addition to serving the NOV on the building owner, the Building Official shall send a copy of the NOV by certified mail to:

(1) The person, if any, in real or apparent charge and control of the premises involved;

(2) The holder of any mortgage, deed oftrust, lien or encumbrance of record;

(3) The owner or holder of any lease of record; and,

(4) The record holder of any other estate or interest in the building, structure or property, or the land upon which it is located.

The failure of any owner or other person to receive such notice shall not affect in any manner the validity of any proceedings taken hereunder.

(e) The person serving the Hearing Notice shall complete a declaration under penalty of perjury, certifying the date and manner in which such Hearing Notice was given, and the Building Official shall retain the certified mail receipt card, if any, for the Hearing Notice.

(f) In addition to the Hearing Notice, the Building Official shall provide the building owner with an information sheet regarding the enforcement process, the building owner's rights and duties prior to the hearing, and the information the building owner must bring to the hearing.

102A.6 Conduct of Administrative Hearing.

(a) The Building Official shall conduct the Administrative Hearing, or may designate a Hearing Officer who shall have the same authority as the Building Official to hear and decide the case and

to make any orders consistent with this Code. For purposes of Sections 102A.6 through 102A.7, "Hearing Officer" shall include the Building Official if the Building Official conducts the Administrative Hearing. The Hearing Officer shall not be the same individual who signed the NOV.

(b) The Hearing Officer shall hold the Administrative Hearing at the time and place designated in the Hearing Notice. The Hearing Officer may, in his or her discretion and for good cause shown, continue the hearing one time, for a period not to exceed 30 days. All persons having an interest in the building, structure or property or having knowledge of facts material to the allegations of the NOV, including the list of code violations, may present evidence for consideration by the Hearing Officer, subject to any rules adopted by the Hearing Officer for the orderly conduct of the hearing.

102A.7 Administrative Order.

(a) Within 30 days following the conclusion of the Administrative Hearing, the Hearing Officer shall issue a written decision ("Administrative Order").

(b) The Administrative Order shall state in reasonable detail which conditions render the building, structure, or property, or portion thereof, unsafe, and shall state the work required to be done to satisfy the Administrative Order. The Administrative Order shall include a copy of the NOV. The Administrative Order may direct the building owner to repair, alter, vacate, and/or demolish the subject property.

(c) The Administrative Order shall specify the time within which the building owner shall repair, alter, vacate, and/or demolish the building, structure, or property, or portion thereof, or otherwise comply with the Order. The time for compliance with the Administrative Order shall not to exceed 180 days from permit issuance. The Hearing Officer may, in his or her discretion and for good cause shown, extend the time for compliance with the Administrative Order once, for a period limited to the minimum time necessary for completion and not to exceed 90 days, following a written request by the building owner.

(d) In addition to any monetary penalties authorized in Section 103A, the Department shall be entitled to its costs of preparation for and appearance at the Administrative Hearing, and all prior and subsequent attendant and administrative costs, and the Department shall assess these costs upon the building owner monthly, at the rates set under Section 110A, Tables 1A-D (Standard Hourly Rates) and 1A-K (Penalties, Hearings, Code Enforcement Assessments), until the costs are paid in full. In addition, the Department shall be entitled to its attorneys fees and costs, including but not limited to expert witness fees, incurred in bring the administrative enforcement action. The violations cited in the Administrative Order will not be deemed legally abated until the building owner makes full payment of the penalties and costs, and failure to pay the assessment of costs shall result in tax lien proceedings against the property.

(e) The Hearing Officer shall serve the Administrative Order on the building owner in the same manner as the Hearing Notice. The Building Official shall record a copy of the Administrative Order in the Assessor-Recorder's Office. When the Building Official determines that the work required under the Administrative Order has been completed and the building, structure, or property, or portion thereof, no longer is unsafe, the Building Official shall issue and record a rescission of the Administrative Order with the Assessor-Recorder's Office.

(f) Any person may appeal an Administrative Order pursuant to Section 105A.2. The Hearing Officer shall inform the building owner, at the Administrative Hearing and in the Administrative Order, of the right of appeal to the Abatement Appeals Board provided that the appeal is made in writing and filed with the Secretary of the Abatement Appeals Board within 15 days after the Order is posted and served. The 15-day limitation shall not apply when any type of a moratorium authorized in Section 105A.2 is sought. Where construction materials, methods, types of construction, or compliance with the time limits set forth in Table No. 16B-A are the bases, in whole or in part, of the Building Official's finding that an unreinforced masonry building, or portion thereof, is unsafe, the Abatement Appeals Board shall refer these matters to the Board of Examiners established in Section 105A.1 of this Code. Where construction materials, methods, and

types of construction are the bases, in whole or in part, of the Building Official's finding that the building, or structure, or portion thereof, is unsafe, the Abatement Appeals Board shall refer these matters to the Board of Examiners for its examination and determination with respect to such materials, methods, and types of construction. The Board of Examiners shall approve or disapprove such materials, methods, and types of construction, and may attach conditions to its approval, and shall forward a copy of its report to the Abatement Appeals Board. The Abatement Appeals Board shall include in its decision the findings of the Board of Examiners.

102A.8 Remedies are Non-Exclusive. Notwithstanding the provisions of Sections 102A.4 through 102A.7, the City Attorney may institute civil proceedings for injunctive and monetary relief, including civil penalties, against a building owner for violations of the Municipal Code under any circumstances, without regard to whether a complaint has been filed or the Building Official has issued a NOV or an Administrative Order. In any civil action filed by the City Attorney under this Section 102A.8, the City Attorney may seek recovery of and the court may award the City its attorneys fees and costs, including but not limited to expert witness fees, incurred in bringing the proceedings.

102A.11 Violation – Penalties for Disregarding Order.

102A.11.1 Failure to comply. The owner of any building, structure, or property or portion thereof determined by the Building Official to be unsafe who has failed to comply with any order shall be guilty of a misdemeanor as set forth in Section 103A.

102A.11.2 Failure to vacate. The occupant or lessee in possession who fails to comply with the order to vacate said building or portion thereof in accordance with any order given as provided for hereinabove shall be guilty of a misdemeanor as set forth in Section 103A.

102A.11.3 Removal of notice. Any person who removes any notice or order posted as required in this section shall be guilty of a misdemeanor as set forth in Section 103A.

102A.12 Costs of Abatement by the City and County of San Francisco. Whenever the Building Official, pursuant to authority conferred by this code, causes a building, structure, or property, or portion thereof, to be barricaded, secured, repaired or altered, demolished, or have other actions taken by the Department or its contractor to remedy an unsafe condition, the cost thereof shall be paid from the Repair and Demolition Fund and assessed against said property.

102A.13 Repair and Demolition Fund. A special revolving fund, to be known as the Repair and Demolition Fund, may be used for the purpose of defraying the costs and expenses (including Department administrative costs) which may be incurred by the Building Official in carrying out the actions described in Section 102A.12.

The Board of Supervisors may, by transfer or by appropriation, establish or increase the special revolving fund with such sums as it may deem necessary in order to expedite the performance of the work of securing, repairing, altering or demolition. The Repair and Demolition Fund shall be replenished with all funds collected under the proceedings hereinafter provided for, either upon voluntary payments or as the result of the sale of the property after delinquency, or otherwise. Balances remaining in the Repair and Demolition Fund at the close of any fiscal year shall be carried forward in such fund.

102A.14 Failure to Comply with Order. Whenever an order to repair, alter, vacate and alter or repair, or vacate and demolish any building, structure or property, or portion thereof, has not been complied with within the time set by the Building Official, or within such additional time as the

Building Official may for good cause extend, or within the time fixed by the Abatement Appeals Board, the Building Official shall have the power, in addition to any other remedy provided herein or by law or any other ordinance, to:

1. Cause the building, structure, property, or portion thereof, to be vacated, barricaded, or otherwise secured against use or occupancy pending the correction of all conditions ordered to be corrected, or pending demolition; or

2. Cause the building, structure, property, or portion thereof, to be dismantled or demolished and the site cleared by such means as the Building Official shall deem advisable; or

3. Cause the building, structure, property, or portion thereof, to be repaired or altered, so as to render it safe and in compliance with applicable laws and ordinances, by such means as the Building Official shall deem advisable.

Any work done pursuant to the authority herein shall be performed in accordance with the limitations as to repair expenditure as contained in Section 102A.16 and with the established practices applicable to the Department.

102A.15 Forfeiture of Owner's Right to Do Work. Whenever, pursuant to Section 102A.14, the Building Official intends to cause to be done any of the work described therein, the Building Official shall provide notice in the manner set forth in Section 102A.4, of the Building Official's intention to do such work, and shall specify a date certain upon which the Building Official shall solicit bids to accomplish the necessary work, which shall be not sooner than 10 days from the date such notice is given. From and after said date certain the owner and every other person having charge or control over said building, structure or property shall be deemed to have forfeited all right to do such work and is thereafter prohibited from doing any such work except as the Building Official may allow.

102A.16 Serious and Imminent Hazards – Emergency Orders. Notwithstanding any other provisions of this chapter, whenever, in the judgment of the Building Official, it appears from an inspection or notice of violation that there exists in, on, or near any building, structure, property, or portion thereof, any condition constituting an imminent and substantial hazard to the life, health or safety of the occupants or other persons, or to such building, structure, or property requiring prompt action to correct said condition, the Building Official shall have the power to issue an order in writing detailing the serious and imminent hazard conditions and requiring:

1. That the building, structure, property, or portion thereof, be vacated and thereafter be kept vacant until the Building Official gives written permission that the same may be reoccupied, without giving the notice and holding the hearing prescribed in Sections 102A.4 through 102A.6, whenever, by reason of serious and imminent danger, prompt vacating of the premises, building, structure or property, or a portion thereof, appears necessary in the judgment of the Building Official;

2. That the building, structure, property, or a portion thereof, be barricaded, boarded up, or otherwise secured against entry, occupancy or use by all persons, except as permitted by said order;

3. That the building, structure, property, or a portion thereof, be demolished or that serious and imminent hazard conditions be repaired, altered, corrected or eliminated in accordance with the particulars set forth in the order.

The order shall contain time frames required for compliance with the order and shall set forth the street address of the building or structure and a description of the building, structure, or property sufficient for identification.

In such cases of serious and imminent hazard, the order may be issued by the Building Official without giving the notice and holding the hearing specified in Sections 102A.4 through 102A.6. A copy of said order shall be posted in a conspicuous place upon the building, structure, or

property, a copy shall be served in the manner prescribed in Section 102A.4, and a copy shall be recorded in the Assessor-Recorder's Office.

The Building Official shall have the further power under this section to cause or compel the work required under the order to be undertaken by such means as the Building Official may deem advisable if the owner and all other persons having an interest in the building, structure, or property have failed, for a period of not more than 48 hours after the posting and service of the order, to comply with the order.

Whenever the Building Official orders that repairs or alterations be made pursuant to this Section, the authority of the Building Official to repair or alter, or cause repairs or alterations to be made to comply with the order, shall be limited to repairs or alterations whose cost does not exceed 50 percent of the value, as defined by the Assessor, of the building, structure, property, or portion thereof.

102A.17 Assessment of Costs. The Building Official shall take action to have the costs of all work done or caused to be done pursuant to the provisions of Section 102A.14 or Section 102A.16 assessed against the parcel or parcels of land upon which said building, structure, property or portion thereof is situated. Such costs shall include, in addition to the cost of barricading, securing, repairing, or demolishing the building and the clearing of the site, the cost to the City and County of San Francisco of administration and supervision of such work. See Section 110A, Table 1A-K – Penalties, Hearings, Code Enforcement Assessments – for applicable rates.

102A.18 Report of Costs, Notice of Hearing on Confirmation.

102A.18.1 Preparation of delinquency report. If any penalty or assessment imposed pursuant to Section 102A is not received within the required time period, the Building Official shall initiate proceedings to make the penalty or assessment, plus accrued interest, a special assessment lien against the real property which is the subject of the penalty or assessment. The Building Official shall prepare a delinquency report for the Board of Supervisors. For each delinquent account, the report shall contain the owner's name, the amount due, including interest, and a description of the real property. The report shall also indicate which of the delinquent accounts should be exempted from the lien procedure because of the small amounts involved, or because another debt collection procedure is more appropriate. The descriptions of the parcels shall be those used for the same parcels on the Recorder/Assessor's Office records for the current year.

102A.18.2 Notice. Five days prior to forwarding the delinquency report to the Board of Supervisors, the Building Official shall serve copies of the report in the manner prescribed in Section 102A.4 and shall post the report at the subject properties. Upon receipt of the report, the Board of Supervisors shall fix a time, date and place for hearing the report and any protests or objections thereto, and shall mail notice of the hearing not less than ten days prior to the date of hearing to each owner of real property described in the report.

102A.19 Hearing and confirmation of report for special assessment of costs.

102A.19.1 Hearing and confirmation. The Board of Supervisors shall hold a hearing on the report along with protests or objections by the representatives of the real property liable to be assessed for such delinquent accounts. The Board of Supervisors may make such revisions, corrections, or modifications of the report as it may deem just, after which, by motion or resolution, the report shall be confirmed. The Board of Supervisor's decision on the report and on all protests or objections thereto shall be final and conclusive and shall constitute confirmation of the report; provided, however, that any delinquent account may be removed from the report by payment in

full at any time prior to confirmation of the report. The Clerk of the Board of Supervisors shall cause the confirmed report to be verified in form sufficient to meet recording requirements.

102A.19.2 Collection of assessment. Upon confirmation of the report by the Board of Supervisors, the delinquent charges contained therein shall constitute a special assessment against the property identified in the report. Each such assessment shall be subordinate to all existing special liens previously imposed upon such property and shall be paramount to all other liens except those for State, County and municipal taxes with which it shall be in parity. The lien shall continue until the assessment and all interest due and payable thereon are paid. All laws applicable to the levy, collection and enforcement of municipal taxes shall be applicable to said special assessment.

102A.19.3 Recordation charges. The Clerk of the Board of Supervisors shall cause the confirmed and verified report to be recorded in the Assessor- Recorder's Office within 10 days of its confirmation. The special assessment lien on each parcel or property described in said report shall include additional charges for administrative expenses. See Section 110A, Table 1A-K – Penalties, Hearings, Code Enforcement Assessments – for Lien Recordation charges.

102A.19.4 Filing with Controller and Tax Collector; Distribution of proceeds. After the report is recorded, the Clerk of the Board of Supervisors shall file a certified copy with the Controller and Tax Collector, whereupon it shall be the duty of said officers to add the amount of said special assessment to the next regular bill for taxes levied against said parcel or parcels, and thereafter said amount shall be collected at the same time and in the same manner as ordinary taxes are collected for the City and County of San Francisco, and shall be subject to the same penalties and the same procedures for foreclosure and sale in case of delinquency as is provided for property taxes.

102A.19.5 Release of lien, recording fee. Upon payment to the Tax Collector of the special assessment, the Tax Collector shall cause a release lien to be recorded with the Assessor-Recorder's Office, and from the sum collected pursuant to Section 102A.19.3 above, shall pay to the Assessor-Recorder's Office the required recording fee.

102A.20 Continuance of gas and electricity. In the event that electricity or gas service to a building, structure, property, or portion thereof is about to be discontinued by the utility company for nonpayment of bills, the Building Official, through the issuance of an Emergency Order, may order that the utility company continue said service to protect the life, health and safety of the occupants. Said order shall be issued pursuant to the provisions of Section 102A.16 of this code and shall remain in force for six months, unless otherwise specified by the Building Official.

The funds for the continuance of said services shall be provided from the Repair and Demolition Fund. Said costs and administrative costs incurred by the City and County of San Francisco shall be assessed against the parcel or parcels of land upon which said building, structure or property is situated. See Section 110A, Table 1A-K – Penalties, Hearings, Code Enforcement Assessments – for applicable rate.

If payment is not received from the property owner within the required time period, a Report of Costs pursuant to Section 102A.18 shall be prepared for all such costs. Submittal, confirmation, recordation and collection of the special assessment shall follow the procedures provided in Section 102A.19.

The provisions of Section 102A.20 shall only apply to buildings, structures, property, or portions thereof for which the owner, and not the tenant, is responsible for payment of said utility bills.

(Amended by Ord. 23-16, File No. 150494, App. 3/4/2016, Eff. 4/3/2016; Ord. 33-16, File No. 160115, App. 3/11/2016,

Eff. 4/10/2016; Ord. 60-16, File No. 151085, App. 4/27/2016, Eff. 5/27/2016, Oper. 6/1/2016)

SECTION 103A – VIOLATIONS

It shall be unlawful for any person, firm or corporation to erect, construct, enlarge, alter, repair, move, improve, remove, convert or demolish, equip, use, occupy or maintain any building, structure, property, or portions thereof or cause or permit the same to be done in violation of this code.

Any person, the owner or the owner's authorized agent, who violates, disobeys, omits, neglects, or refuses to comply with, or resists or opposes the execution of any of the provisions of this code, shall be liable for a civil penalty, not to exceed $500 for each day such violation is committed or permitted to continue, which penalty shall be assessed and recovered in a civil action brought in the name of the people of the City and County of San Francisco by the City Attorney in any court of competent jurisdiction. Any penalty assessed and recovered in an action brought pursuant to this paragraph shall be paid to the City Treasurer and credited to the Department's Special Fund.

Any person, the owner or the owner's authorized agent, who violates, disobeys, omits, neglects, or refuses to comply with, or who resists or opposes the execution of any of the provisions of this code, shall be guilty of a misdemeanor, and upon conviction thereof shall be punished by a fine not exceeding $500, or by imprisonment not exceeding six months, or by both such fine and imprisonment, unless otherwise provided in this code, and shall be deemed guilty of a separate offense for every day such violation, disobedience, omission, neglect or refusal shall continue. Any person who shall do any
work in violation of any of the provisions of this code, and any person having charge of such work who shall permit it to be done, shall be liable to the penalty provided.

It shall be unlawful for any person to interfere with the posting of any notice provided for in this code, or to tear down or mutilate any such notice posted by the Department.

103A.1 Pursuant to Health and Safety Code Section 13112, any person who violates any order, rule or regulation of the state fire marshal is guilty of a misdemeanor punishable by a fine of not less than $100.00 or more than $500.00, or by imprisonment for not less than six months, or by both. A person is guilty of a separate offense each day during which he or she commits, continues or permits a violation of any provision of, or any order, rule or regulation of, the state fire marshal as contained in this code.

Any inspection authority who, in the exercise of his or her authority as a deputy state fire marshal, causes any legal complaints to be filed or any arrest to be made shall notify the state fire marshal immediately following such action.

103A.2 Actions and proceedings. Subject to other provisions of law, California Code of Regulations, Title 25, Division 1, Chapter 1 commencing with Section 1 and Health and Safety Code, Sections 17980 through 17995.5 address punishments, penalties and fines for violations of building standards in structures subject to the State Housing Law.

103A.2.1 Actions and proceedings. Subject to other provisions of law, California Code of Regulations, Title 25, Division 1, Chapter 2 commencing with Section 1000 and Health and Safety Code, Section 18700 addresses punishments, penalties and fines for violations of building standards subject to the Mobilehome Parks Act.

103A.2.2 Actions and proceedings. Subject to other provisions of law, California Code of Regulations, Title 25, Division 1, Chapter 1 commencing with Section 600 and Health and Safety Code, Sections 17060 through 17062.5 address punishments, penalties and fines for violations of building standards subject to the Employee Housing Act.

103A.3 Restrictions of unlawful residential demolition replacement.

103A.3.1 Demolition without permit. Whenever the demolition of any building or structure containing one or more residential units takes place without the issuance of a demolition permit as required by this code, the site on which the unlawful demolition occurred shall be subject to the following restriction: For five years from the date of the unlawful demolition, no permit authorizing the construction or alteration of any building or structure for that site shall be issued, except for a permit for the construction or alteration of a building or structure with the same number of residential units, with the same proportion of residential to nonresidential units, and with the same or fewer square feet as the building or structure that was unlawfully demolished.

103A.3.2 Definitions. For the purposes of this section, the following definitions shall apply:

DEMOLITION means the total tearing down or destruction of a building containing one or more residential units, or any alteration which destroys or removes, as those terms are defined by the Building Official of the Department of Building Inspection, principal portions of an existing structure containing one or more residential units.

PRINCIPAL PORTION means that construction which determines the shape and size of the building envelope (such as the exterior walls, roof and interior bearing elements), or that construction which alters two-thirds or more of the interior elements (such as walls, partitions, floors or ceilings).

RESIDENTIAL UNIT means any dwelling unit, as defined in this code, or any guest room, as defined in the San Francisco Housing Code, other than the following:

1. Any guest room in a building classified as a residential hotel pursuant to the Residential Hotel Unit Conversion and Demolition Ordinance

2. Any residential unit in a building where the demolition or alteration is required to comply with
this code, the Housing Code or the City Planning Code.

103A.3.3 Hearing. The Building Official shall hold a hearing within a reasonable period of time after discovering that an unlawful demolition may have taken place. The Building Official shall cause notice to be given to the owners of the affected property, and to the owners and occupants of property on the same block as the affected property's site and across the street from the site for one block (that is, on lots which abut the same street as that which abuts the site to the nearest intersections on either side of the site), using the names and addresses of the owners as shown on the last assessment rolls of the City and County of San Francisco. For corner lots, notice shall be provided to the owners and occupants of property on the same block as the affected property's site and for one block along both streets which the lot abuts (that is, on lots which abut the two streets which the site abuts to the nearest intersection on either side of the site) and, in addition, to the other corner lots at the intersection where the site is located. Notice may be given either by personal service or any mail, not less than 30 days before the scheduled date of the hearing. Immediately after giving such notice, the Building Official shall cause a copy of the notice, printed on a card of not less than 8 inches by 10 inches (203.2 mm × 254 mm), to be posted in a conspicuous place on the affected property. The notice shall specify the date and nature of the hearing and that the following issues will be determined at the hearing: whether an unlawful demolition has taken place as described in Sections 103A.3.1 and 103A.3.2, and, if so, the number of residential units that existed on the site, the proportion of residential to nonresidential units that existed on the site and the total

square feet of the building or structure that existed on the site. Upon determination that an unlawful demolition has taken place, the Building Official shall promptly record a notice in the official records of the Recorder of the City and County of San Francisco; the recorded notice shall state that the property is subject to the restrictions set forth in Section 103A.3.1 of this code.

Upon determination that an unlawful demolition has taken place, the Building Official shall assess the owner all costs incurred by the City and County of San Francisco in detecting violations of this section and conducting the Building Official's hearing by sending a notice of payment due to the property owner at the address shown on the City's last assessment rolls. The notice shall list the costs incurred by the City in detecting violations of the ordinance and conducting the Building Official's hearing, advise the owner that he or she is liable for these costs and advise the owner that payment to the City is due within 60 days of the mailing date of the notice. The notice shall also advise that, if payment of the costs is not received within 30 days of the due date, a lien may be imposed on the property pursuant to the report and confirmation procedure set forth in Sections 102A.18 and 102A.19 of this code.

103A.3.4 Civil penalties. Any agent, contractor or other person acting on behalf of the owner of a building or structure containing one or more residential units who causes or permits the demolition of the building or structure with the knowledge that a demolition permit has not been issued as required by this code shall be subject to a civil penalty of $5,000. Any owner who causes or permits the demolition of his or her building or structure containing one or more residential units with the knowledge that no demolition permit has been issued as required by this code shall be subject to a civil penalty of $1,000.

103A.3.5 Penalties nonexclusive. The penalties set forth in this section are not exclusive, but are in addition to any other penalties set forth in this code.

103A.4. Vacant or abandoned buildings – Annual registration; registration fee; maintenance and security requirements.

103A.4.1. Definition. A building shall be defined as a vacant or abandoned if it (1) is unoccupied and unsecured; or (2) is unoccupied and secured by boarding or other similar means; or (3) is unoccupied and unsafe as defined in Section 102A of this Code; or (4) is unoccupied and has multiple code violations; or (5) has been unoccupied for over 30 days. A building which is partially unoccupied and has been cited for blight under Chapter 80 of the San Francisco Administrative Code, shall also be deemed a vacant or abandoned building that is subject to this Section. Commercial Storefronts, as defined in Section 103A.5.1 of this Code, located within vacant or abandoned buildings shall be subject to the enforcement provisions in Sections 103A.5-103A.5.6 of this Code.

For purposes of this Section 103A.4. a building shall not be considered vacant or abandoned if:

(1) There is a valid building permit for repair, rehabilitation, or construction of a building on the parcel and the owner completes the repair, rehabilitation, or construction within one year from the date the initial permit was issued; or

(2) The building complies with all codes, does not contribute to blight as defined in Chapter 80 of the San Francisco Administrative Code, is ready for occupancy, and is actively being offered for sale, lease, or rent.

(3) The building complies with all codes, does not contribute to blight as defined in Chapter 80 of the San Francisco Administrative Code, and is undergoing a probate process that does not exceed two years. Upon expiration of the two-year period, the building shall become subject to the requirements of Section 103A.4.

103A.4.2. Property owner's obligation to register a vacant or abandoned building. The owner of a building defined as vacant or abandoned under Section 103A.4.1 shall register that building with the Department 30 days after it has become vacant or abandoned on a form provided by the Department. The form shall describe the methods by which the owner has secured the property against unauthorized entry, declare any future plans for the property, state whether or not there is fire and liability insurance coverage, and provide such other information as the Department may require. A registration fee shall be paid at the time of registration and annually thereafter. See Section 110A, Table 1A-J for applicable fee.

103A.4.3. Notice. Whenever the Director has probable cause to believe, based upon an inspection, complaint, or report from another agency of the City and County of San Francisco or other governmental agency, that a building is vacant or abandoned and it has not been registered as required by this Section 103A.4, the Director shall serve the owner of record, as shown on the Assessor's Records, or authorized agent with a written notice requiring the owner to register the building with the Department as vacant or abandoned and pay the registration fee within the period of time specified in the notice, which shall be no greater than 30 days.

103A.4.4. Sign posting. The owner of record of the vacant or abandoned building is required to post a sign at the front of the building, in a conspicuous location protected from the weather, that provides the current name, address, and phone number of the owner of record and authorized agent if different from the owner. If a notice of default or foreclosure has been recorded for the property, the lender's name, address, and telephone number must also be provided. The sign shall be no smaller than 8-1/2 inches by 11 inches.

103A.4.5. Maintenance and security requirements. The following maintenance and security requirements shall apply to a vacant or abandoned building. The Director has the discretion to modify these requirements in the case of a partially vacant building, and to modify or waive some or all of these requirements in the case of a building that has been damaged by fire, a natural disaster, or other calamity.

103A.4.5.1. Maintenance of property – exterior. The property owner shall actively maintain and monitor the exterior of the building and the grounds so that they remain in continuing compliance with all applicable codes and regulations, and do not contribute to and are not likely to contribute to blight as defined in Chapter 80 of the Administrative Code. Active maintenance and monitoring shall include, but not be limited to:

(1) Maintenance of landscaping and plant materials in good condition;

(2) Regular removal of all exterior trash, debris, and graffiti;

(3) Maintenance of the exterior of the building in a good condition that is structurally safe and preserves the physical integrity of the structure, including but not limited to paint and finishes, foundation, roof, chimneys, flues, gutters, downspouts, scuppers, flashing, skylights, windows, exterior stairs and decks;

(4) Prevention of criminal activity on the premises and trespass by unauthorized persons; and

(5) Turning off all utilities that are not necessary for the upkeep and maintenance of the building.

103A.4.5.2. Maintenance of property – interior. The property owner shall preserve the interior of the building from damage by the elements or plumbing leaks, and keep it free from accumulation of garbage and other debris, and from infestation by rodents, insects, or other pests.

103A.4.5.3. Security. The building shall be secured against unauthorized entry. The methods of security shall be as approved by the Director, who shall take into consideration whether the property has been cited for nuisance activities or criminal conduct by another department of the City and County of San Francisco or other government agency.

103A.4.6. Insurance. The owner of record shall maintain whatever fire and liability insurance coverage the Director determines is necessary. Any insurance policy shall require notice to the Department in the event of cancellation of insurance or a reduction in coverage.

103A.4.7. Violation a public nuisance; enforcement. A property in violation of the provisions of this section is deemed to be a public nuisance and subject to enforcement by the Department and penalties under Section 102A and 103A of this Code or under other applicable sections of the San Francisco Municipal Code.

103A.5 Vacant or Abandoned Commercial Storefronts – Annual Registration; Registration Fees; Maintenance and Security Requirements.

103A.5.1 Definitions. For the purposes of Section 103A.5, including Sections 103A.5.1-103A.5.3.6:

***COMMERCIAL STOREFRONT.* A Commercial Storefront shall be any area within a building that may be individually leased or rented for any purpose other than Residential Use as defined in Planning Code Sections 790.88 and 890.88.**

***VACANT OR ABANDONED.* A Commercial Storefront shall be Vacant or Abandoned if it (1) is unoccupied and unsecured; or (2) is unoccupied and secured by boarding or other similar means; or (3) is unoccupied and unsafe as defined in Section 102A of this Code; or (4) is unoccupied and has multiple code violations; or (5) has been unoccupied for over 30 days. Notwithstanding the foregoing sentence, a Commercial Storefront shall not be considered Vacant or Abandoned if**

(1) There is a valid building permit for repair, rehabilitation, or construction of the Commercial Storefront and the owner completes the repair, rehabilitation, or construction within one year from the date the initial permit was issued, unless the Department, in its sole discretion, determines that the owner needs additional time to complete the repair, rehabilitation, or construction of the Commercial Storefront; or

(2) The owner or leaseholder has filed an application for, and is actively seeking to obtain, authorization, permits or a license required by state or local law permitting the lawful use and occupancy of the Commercial Storefront; or

(3) The Commercial Storefront complies with all provisions of state and local law, does not contribute to blight as defined in Chapter 80 of the Administrative Code, is ready for occupancy, and the owner provides evidence satisfactory to the Department that the Commercial Storefront is actively being offered for sale, lease, or rent. Satisfactory evidence shall include, but is not limited to, evidence that the owner has hired a real estate agent or other rental agent who advertises and promotes the Commercial Storefront for rent, lease or sale, or proof that the Commercial Storefront is offered for sale on the Multiple Listing Service or any other comparable real estate listing service.

103A.5.2 Property owner's obligation to register a vacant or abandoned commercial storefront; registration fee. The owner of a Vacant or Abandoned Commercial Storefront shall, within 30 days after it has become vacant or abandoned, register the Commercial Storefront with the Department on a form provided by the Department. The form shall describe the methods by which the owner has secured the Commercial Storefront against unauthorized entry, provide a contact phone

number for the Commercial Storefront owner or party responsible for maintenance of the Commercial Storefront, state the most recent legal use of the Commercial Storefront, state the square footage of the Commercial Storefront, declare any future plans for the Commercial Storefront, state whether there is fire and liability insurance coverage, and provide such other information as the Department may require. A registration fee shall be due 270 days after the Commercial Storefront has become vacant or abandoned, unless the Director has issued a notice to register under Section 103A.5.4, in which case the registration fee shall be due 270 days after the issuance of the notice ("registration payment deadline"). The registration payment deadline will serve as the date for calculating an annual renewal fee which shall be paid every year the Commercial Storefront remains Vacant or Abandoned. However, if the owner rents the Commercial Storefront to a tenant who occupies the premises in a manner that complies with all provisions of state and local law prior to the registration payment deadline, the Commercial Storefront shall be removed from the Department's registry and the owner need not pay the registration fee. The registration fee shall be equal to the amount due under Section 103A.4.2 of this Code. See Section 110A, Table 1A-J for applicable fees.

103A.5.3 Maintenance of vacant or abandoned commercial storefront registry. The Department shall maintain a registry of all Vacant or Abandoned Commercial Storefronts within the City and shall furnish a copy of the registry to the Office of Economic and Workforce Development at least once per fiscal quarter.

103A.5.4 Notice. Whenever the Director has probable cause to believe, based upon an inspection, complaint, or report from another agency of the City or other governmental agency, that a Commercial Storefront is Vacant or Abandoned and has not been registered as required by Section 103A.5.2, the Director shall serve the owner of record, as shown on the Assessor's Records, or authorized agent with a written notice requiring the owner to register the Commercial Storefront with the Department as Vacant or Abandoned within the period of time specified in the notice, which shall be no greater than 30 days. Additionally, the owner shall pay the associated registration fee within 270 days of the issuance of the notice to register if required by Section 103A.5.2.

103A.5.5 Sign posting, maintenance, security, and insurance. All requirements listed in Sections 103A.4.4-103A.4.6 of this Code shall also apply to Vacant or Abandoned Commercial Storefronts. All such requirements shall be fulfilled by the owner within 30 days of the Commercial Storefront becoming Vacant or Abandoned, or within 30 days of the issuance of notice to register, regardless of the owner's intentions to rent the Commercial Storefront before the registration payment deadline lapses.

103A.5.6 Violation a public nuisance; enforcement. A Commercial Storefront in violation of this Section 103A.5, including Sections 103A.5.1-103A.5.6, is deemed to be a public nuisance and subject to enforcement by the Department and penalties under Sections 102A and 103A of this Code or other applicable sections of the Municipal Code.

(Amended by Ord. 182-14, File No. 140284, App. 8/7/2014, Eff. 9/6/2014; Ord. 14-16, File No. 151079, App. 2/18/2016, Eff. 3/19/2016)

SECTION 104A – ORGANIZATION AND ENFORCEMENT

104A.1 Enforcement agency. The Department of Building Inspection shall be the administering and enforcing agency under this code.

104A.2 Powers and duties of Building Official.

104A.2.1 General. The Building Official is hereby authorized and directed to enforce all the provisions of this code. For such purposes, the Building Official shall have the powers of a law enforcement officer.
Pursuant to Health and Safety Code Section 13108, upon the written request of the chief fire official of any city, county or fire-protection district, the State Fire Marshal may authorize such chief fire official and his or her authorized representatives, in their geographical area of responsibility, to make fire- prevention inspections of state-owned or state- occupied buildings, other than state institutions, for the purpose of enforcing the regulations relating to fire and panic safety adopted by the State Fire Marshal pursuant to this section and building standards relating to fire and panic safety published in the California Building Standards Code. Authorization from the State Fire Marshal shall be limited to those fire departments or fire districts which maintain a fire-prevention bureau staffed by paid personnel.
Pursuant to Health and Safety Code Section 13108, any requirement or order made by any chief fire official who is authorized by the State Fire Marshal to make fire-prevention inspections of state-owned or state occupied buildings, other than state institutions, may be appealed to the State Fire Marshal. The State Fire Marshal shall, upon receiving an appeal and subject to the provisions of Chapter 5 (commencing with Section 18945) of Part 2, 5 of Division 13 of the Health and Safety Code, determine if the requirement or order made is reasonably consistent with the fire and panic safety regulations adopted by the Office of the State Fire Marshal and building standards relating to fire and panic safety published in the California Building Code.
The Building Official shall have the power to render interpretations of this code and to adopt and enforce rules and supplemental regulations to clarify the application of its provisions. Such interpretations, rules and regulations shall be in conformance with the intent and purpose of this code. Such rules and regulations, commonly referred to as Code Rulings and Administrative Bulletins supplemental to this code shall not take effect until approved by the Building Inspection Commission and signed by the Building Official except in unusual circumstances where the Building Official has determined that there is an immediate need to protect the public health and safety. When the Building Official finds that such circumstances exist, the Building Official may order immediate enforcement of a particular rule or regulation. The Building Official shall arrange for a subscription service to such rules and regulations, the entire cost of which is to be borne by the subscribers.
NOTE: "Code Rulings" and "Administrative Bulletins" may be found in the Department's Rules and Regulations printed at the back of this code.

104A.2.2 Deputies. In accordance with prescribed procedures and with the approval of the appointing authority, the building official may appoint such number of technical officers and inspectors and other employees as shall be authorized from time to time. The building official may deputize such inspectors or employees as may be necessary to carry out the functions of the code enforcement agency.

104A.2.3 Right of entry. When it is necessary to make an inspection to enforce the provisions of this code or other codes or ordinances, or when the Building Official has reasonable cause to believe that there exists in a building or upon a premises a condition that is contrary to or in violation of this code or other codes or ordinances that makes the building or premises unsafe, dangerous or hazardous, the Building Official may enter the building or premises at reasonable times to inspect or to perform the duties imposed by this code or other codes or ordinances, provided that if such building or premises be occupied that credentials be presented to the occupant and entry requested. If such building or premises be unoccupied, the Building Official shall first make a reasonable effort to locate the owner or other person having charge or control of the building or premises and

request entry. If entry is refused, the Building Official shall have recourse to the remedies provided by law to secure entry.

104A.2.4 Stop orders.

(a) Whenever any work is being done contrary to the provisions of this code, or other pertinent laws or ordinances implemented through the enforcement of this code, the building official may order the work stopped by notice in writing served on any persons engaged in the doing or causing such work to be done, and any such persons shall forthwith stop such work until authorized by the building official to proceed with the work.

(b) If the building official determines that a project has a history of repeated violations of this code or other pertinent laws or ordinances implemented through the enforcement of this code, the building official may stop all work on the project until all the code violations have been fully investigated and resolved. The director of any department with permitting authority for the project, including but not limited to the Director of Public Works and the Director of Planning, may request the building official to stop all work on the project pending an investigation and resolution of the code violations at issue.

104A.2.5 Occupancy violations. Whenever any building, structure, property or portion thereof regulated by this code is being used contrary to the provisions of this code or the code in effect at the time the use was commenced, the Building Official may order such use discontinued and the building, structure, property or portion thereof, vacated by notice served on any person involved in said use or causing such use to be continued. Such person shall discontinue the use within the time prescribed by the Building Official after receipt of such notice to make the building, structure, property or portion thereof, comply with the requirements of this code; provided, however, that in the event of an unsafe building, structure or property the provisions of Section 102A shall apply.

104A.2.6 Liability. The Building Official charged with the enforcement of this code, acting in good faith and without malice in the discharge of the duties required by this code or other pertinent law or ordinance shall not thereby be rendered personally liable for damages that may accrue to persons or property as a result of an act or by reason of an act or omission in the discharge of such duties. A suit brought against the building official or employee because of such act or omission performed by the building official or employee in the enforcement of any provision of such codes or other pertinent laws or ordinances implemented through the enforcement of this code or enforced by the code enforcement agency shall be defended by this jurisdiction until final termination of such proceedings, and any judgment resulting therefrom shall be assumed by this jurisdiction. This code shall not be construed to relieve from or lessen the responsibility of any person owning, operating or controlling any building or structure for any damages to persons or property caused by defects, nor shall the code enforcement agency or its parent jurisdiction be held as assuming any such liability by reason of the inspections authorized by this code or any permits or certificates issued under this code.

104A.2.7 Modifications. When there are practical difficulties involved in carrying out the provisions of this code, the building official may grant modifications for individual cases. The building
official shall first find that a special individual reason makes the strict letter of this code impractical and that the modifications are in conformance with the intent and purpose of this code and that

such modifications does not lessen any fire-protection requirements or any degree of structural integrity. The details of any action granting modifications shall be recorded and entered in the files of the code enforcement agency.

104A.2.7.1 Local equivalencies. Due to unique topographical conditions in the City and County of San Francisco, including but not limited to the City's built environment and historic pattern of development, equivalencies to certain code requirements have been developed by the Department and are approved on an individual basis if specific conditions are met. Wherever in this code a reference to Local Equivalency is made, details of the equivalency to the specific code requirement may be found in the Department's Rules and Regulations printed at the back of this code.

104A.2.8 Alternate materials, design, and methods of construction. The provisions of this code are not intended to prevent the use of any material, alternate design or method of construction not specifically prescribed by this code, provided any alternate has been approved and its use authorized by the building official.

The building official may approve any such alternate, provided the building official finds that the proposed design is satisfactory and complies with the provisions of this code and that the material, method or work offered is, for the purpose intended, at least the equivalent of that prescribed in this code in suitability, strength, effectiveness, fire resistance, durability, safety and sanitation.

The building official shall require that sufficient evidence or proof be submitted to substantiate any claims that may be made regarding its use. The details of any action granting approval of an alternate shall be recorded and entered in the files of the code enforcement agency.

104A.2.8.1 Alternate for materials, design, tests and methods of construction. Subject to other provisions of law, alterations, repairs, replacements, occupancy, use and maintenance provisions, and moved buildings are referenced in the State Housing Law, Health and Safety Code, Sections 17912, 17920.3, 17922 (c), 17922.3, 17958.8 and 17958.9 and California Code of Regulations, Title 25, Chapter 1 commencing with Section 1. Health and Safety Code Sections 17958.8 and 17958.9 are repeated here to provide clarity and read as follows:

Section 17958.8. Local ordinances or regulations governing alterations and repair of existing buildings shall permit the replacement, retention, and extension of original materials and the use of original methods of construction for any building or accessory structure subject to this part, including a hotel, lodging house, motel, apartment house, or dwelling, or portions thereof, as long as the portion of the building and structure subject to the replacement, retention, or extension of original materials and the use of original methods of construction complies with the building code provisions governing that portion of the building or accessory structure at the time of construction, and the other rules and regulations of the department or alternative local standards governing that portion at the time of its construction and adopted pursuant to Section 13143.2 and the building or accessory structure does not become or continue to be a substandard building.

Section 17958.9. Local ordinances or regulations governing the moving of apartment houses and dwellings shall, after July 1, 1978, permit the retention of existing materials and methods of construction so long as the apartment house or dwelling complies with the building standards for foundation applicable to new construction, and does not become or continue to be a substandard building.

<u>104A.2.8.2 Reserved</u>

104A.2.8.3 Approval and evaluation of materials or systems, methods and types of construction, fabricators, and testing or plan review agencies. General. This section is applicable to evaluations conducted and to approvals granted by the Department, for use in San Francisco, for alternate materials not covered in this code; for plant fabrications of building components which normally require special inspection; for testing or plan review agencies; for evaluation of materials, product methods and types of construction.

Any approval shall be void if, after approval, the design or nature of the device or material, the method of construction, the quality control program, or the capabilities of the agency, are found to deviate in any way from that represented to the Department or the conditions of approval, without first obtaining written authorization from the Building Official.

Any approval may be suspended or revoked if the Building Official finds the approved device or material, method of construction, or quality control program does not meet the requirements of Sections 104A.2.8 or 1701 to such an extent that the approval should not have been granted. See Section 110A, Table 1A-J – Product Approvals – for applicable fees. The fees specified are application fees and are not refundable regardless of whether the action taken is an approval or a denial or whether a subsequent request for hearing by the Board of Examiners is filed, except for the case where an application was filed at the request or on the advice of the Department for situations which subsequently are determined to not require an approval.

Each approval shall become null and void unless renewed within the specified period.

104A.2.9 Tests. Whenever there is insufficient evidence of compliance with any of the provisions of this code or evidence that any material or construction does not conform to the requirements of this code, the building official may require tests as proof of compliance to be made at no expense to this jurisdiction

Test methods shall be as specified by this code or by other recognized test standards. If there are no recognized and accepted test methods for the proposed alternate, the building official shall determine test procedures.

All tests shall be made by an approved agency. Reports of such tests shall be retained by the building official for the period required for the retention of public records.

104A.2.10 Cooperation of other officials and officers. The building official may request, and shall receive, the assistance and cooperation of other officials of this jurisdiction so far as is required in the discharge of the duties required by this code or other pertinent law or ordinance.

104A.2.11 Code revisions. The Building Official shall transmit to the Building Inspection Commission, at intervals not exceeding three years, recommendations for changes to this code, based on studies of the following:

1. Requests of the Board of Examiners for modifications from the code, and for approvals of alternate materials, alternate designs and methods of construction.

2. Code changes recommended by the Board of Examiners.

3. Code changes recommended by the Code Advisory Committee or other bodies subordinate to the Building Inspection Commission.

4. Results obtained and problems encountered in legal actions taken to correct code violations.

5. Changes or improvements in materials, methods of construction or design, and changes proposed by interested persons.

6. Investigations of fire and structural damage to buildings, and of determination of unsatisfactory building performance.

7. Periodic changes to the California Building Code and other State regulations which may affect this code.

8. Administrative Bulletins and Code Rulings currently in effect.

9. Violations of the code found on inspections or investigations.

104A.3 Service of notices.

104A.3.1 Notices sent. Whenever a notice is required to be given under this code, unless different provisions are otherwise specifically made, such notice may be given either by personal delivery to the person to be notified or by deposit in the United States mail in a sealed envelope, postage prepaid, addressed to the person to be notified at such
person's last known business or residence address. Service by mail shall be deemed to be have been completed at the time of deposit in the United States mail.

104A.3.2 Proof of notice. Proof of giving any notice may be made by the certificate of any officer or employee of the City and County of San Francisco or by affidavit of any person over the age of eighteen years, which shows service in conformity with the San Francisco Municipal Code or other provisions or law applicable to the subject matter concerned.

104A.4 Code enforcement and rehabilitation fund.

104A.4.1 Establishment. There is hereby established in the Treasury of the City and County of San Francisco a special fund to be known and designated as the Code Enforcement and Rehabilitation Fund, into which shall be deposited all funds allocated by the State Controller from the Local Agency Code Enforcement and Rehabilitation Fund.

104A.4.2 Use of funds. The Code Enforcement and Rehabilitation Fund shall be used exclusively to defray costs incurred in the enforcement of local code provisions mandated by State law.

104A.5 Building Inspection Fund. All fees collected pursuant to this code shall be deposited into the Building Inspection Fund established by the City Controller pursuant to Section 10.117-78 of the San Francisco Administrative Code. This fund shall be used by the Department, subject to the approval of the Building Inspection Commission, to defray costs incurred for, but not limited to, personnel, supplies, and equipment used in evaluating the applications, maintaining files and records, and for disseminating information, reviewing plans and making inspections to determine compliance with the conditions of approvals. Any charges established by the Building Official or the Building Inspection Commission for copies of approvals, publications or other Department records shall be deposited into this fund.

104A.6 Multiple Languages in Notices

104A.6.1 Definitions. For the purposes of this section, the following definitions shall apply:

DEDICATED TELEPHONE NUMBER means a telephone number for a recorded message in a language of limited English proficient residents. The recorded message shall advise callers as to what information they should leave on the message machine so that the Department may return the call with information about the notice in the requested language.

LANGUAGE OF LIMITED ENGLISH PROFICIENT RESIDENTS means each of the two languages other than English spoken most commonly by San Francisco residents of English proficiency as determined by the Planning Department based on its annual review of United States census and other data as required by San Francisco Administrative Code Section 91.2(j).

104A.6.2 Applicability of multiple language requirement. The requirements of Section 104A.6.3 shall apply to the following notices:

1. Notices required by Section 103A.3.3 that are mailed or personally served.

2. Notices required by Section 106A.3.2.2.1.
3. Notices required by Section 106A.3.2.3.
4. Notices required by Section 106A.4.6, Subsection 2.
5. Notices required by Section 106A.4.6, Subsection 3.
6. Notices required by San Francisco Existing Building Code Section ~~3426.3.2~~ 328.3.2.
7. Any other notices required by the Building Code to be mailed or personally served to property owners or occupants adjacent to or near a property for which Building Department development approval is sought.

104A.6.3 Multiple language statement in notices. The Building Department shall prepare a cover sheet as specified below and include it with each notice of the type listed in Section 104A.6.2 that is mailed or personally served. For posted notices listed in Section 104A.6.2, the Department shall post
the cover sheet next to the posted notice. The cover sheet shall contain the following statement, printed in each language of limited English proficient residents and, to the extent available Department resources allow, such other languages that the Department determines desirable, with the name of the language in which the statement is made, the time period for a decision on the matter and the dedicated telephone number for the language of the statement inserted in the appropriate blank spaces:
"The attached notice is provided under the Building Code. It concerns property located at the address shown on the attached notice. A hearing may occur, a right to request review may expire or a development approval may become final unless appealed within [insert days until a hearing or deadline for requesting review or appealing a decision]. To obtain information about this notice in [insert name of language] please call [insert dedicated telephone number]. Please be advised that the Building Department will require at least one business day to respond to any call. Provision of information in [insert name of language] is provided as a service by the Building Department and does not grant any additional rights or extend any time limits provided by applicable law."

The Department shall maintain a dedicated telephone number for each language of limited English proficient residents. The Department shall place a return telephone call by the end of the following business day to each person who leaves a message concerning a neighborhood notice at a dedicated telephone number and, when the caller is reached, provide information to the caller about the notice in the language spoken by the caller.

(Amended by Ord. 59-16, File No. 151081, App. 4/27/2016, Eff. 5/27/2016)

SECTION 105A – BOARDS, COMMISSIONS AND COMMITTEES

105A.1 Board of Examiners.

105A.1.1 Establishment. There is hereby created a Board of Examiners who are qualified by experience and training to pass upon matters pertaining to building design and construction. The functions of the Board of Examiners shall be:

105A.1.1.1 To determine whether specific new materials, new methods and types of construction comply with the standards of safety established by this code, and to recommend the approval or disapproval of such new materials, new methods and types of construction.

105A.1.1.2 To determine whether variances from the requirements of this code should be approved for specific cases where new materials, new methods and types of construction are not involved, and where the enforcement of compliance therewith would result in unreasonable hardship.

105A.1.1.3 To recommend to the Building Official reasonable interpretations of the provisions of this code.

105A.1.1.4 To hear appeals from any Abatement Order of the Building Official involving construction methods, assemblies or materials or where safety is involved.
A copy of the findings of the Board of Examiners shall be forwarded to the Abatement Appeals Board.
Matters involving compliance with Chapters 16B and 16C and other related structural provisions of this code regulating the strengthening of unreinforced masonry bearing wall buildings shall be heard by the Board of Examiners as provided in Section 105A.1.

105A.1.2 Definition. The term "standard of safety," as used in this section, shall mean the general degree of safety conforming to the provisions of this code as required to safeguard life or limb, health and public welfare.

105A.1.3 Intent. It is the intent of this section that new materials, new methods and types of construction which do not comply with the standards of safety established by this code shall in no event be approved; but that the requirements of this code, other than those involving such standards of safety, may be modified or waived under the circumstances set forth in this section.

105A.1.4 Membership. The Board of Examiners shall consist of 13 members, which shall include one plumbing member and one electrical member, who shall serve only when cases related to plumbing or electrical code issues are being considered, and one high-rise sprinkler member who shall serve only when cases related to high-rise sprinkler issues are being considered, and three seismic improvement members who shall serve only when cases related to San Francisco Existing Building Code Chapter ~~34B~~ 4D seismic retrofit issues are being considered. All members are to be appointed by the Building Inspection Commission and shall serve at the Building Inspection Commission's pleasure for a three-year term or until a successor is appointed. The present members shall be continued in office until the expiration of their terms.
In the event a vacancy occurs during the term of office of any member of the Board of Examiners, a new appointment shall be made in a manner similar to that described herein for new members.
The membership shall consist of:

1. **A registered structural engineer.**
2. **A registered mechanical engineer.**
3. **A registered electrical engineer.**
4. **A registered fire protection engineer.**
5. **A licensed general contractor.**
6. **A licensed architect.**
7. **A building trades representative.**
8. **As the plumbing member, a licensed plumbing contractor.**
9. **As the electrical member, a licensed electrical contractor.**
10. **As a high-rise sprinkler member, one building owner representative.**
11. **As a Seismic Improvement member, one tenant also a licensed or registered architect, civil or structural engineer.**
12. **As a Seismic Improvement member, one property owner also a licensed or registered architect, civil or structural engineer.**
13. **As a Seismic Improvement member, one registered structural engineer specializing in seismic improvement.**

The terms "registered" and "licensed" shall be understood to mean by the State of California. The Building Inspection Commission shall make such appointments after giving careful consideration to nominations made by technical associations and general contractor organizations including the Consulting Engineers Association of California, the Structural Engineers Association of Northern California, the San Francisco District of the Associated General Contractors of California, the Plumbing and Mechanical Cooling Contractors of San Francisco, the San Francisco Electrical Contractors Association, the San Francisco Chapter of the American Institute of Architects, and the San Francisco Building Trades Council. Each member of the Board of Examiners shall receive compensation of $125 per meeting attended.

The following shall constitute ex officio members of the Board of Examiners, without vote and without compensation: The Building Official, who shall act as Secretary of the Board of Examiners, and the Fire Marshal.

In the event a member cannot attend meetings of the Board of Examiners for a period of three or more consecutive meetings due to illness, work away from San Francisco, or any other valid reason, the Building Inspection Commission may appoint an alternate member representing the same profession or trade as the absent member and meeting the same registration or licensing requirements as the absent member. The appointment of such alternate need not require solicitation of nominees from the respective organizations. The alternate shall serve on the Board of Examiners until the return of the absent member or until the expiration of the absent member's term, whichever comes first. The compensation indicated in section 4 above shall be paid the alternate member for each meetings attended. The alternate member shall, during the time of service on the Board of Examiners, have all the rights, duties, and privileges of a duly appointed member of the Board of Examiners.

105A.1.5 Board of Examiners's authority with respect to applications for approval of materials, methods and types of construction. Where application has been made to the Building Official to approve new materials, new methods and types of construction which the applicant believes meet the standards of safety set by this code, and where the approval of such application has been denied by the Building Official, the Board of Examiners shall have authority, at the request of the applicant, to determine whether such materials, methods and types of construction comply therewith.

105A.1.5.1 The Board of Examiners shall adopt rules and specifications for examining and testing proposed materials and methods of construction. A copy of such rules and specifications shall be furnished to the applicant.

105A.1.5.2 The applicant shall cause to be made, at the applicant's expense, all reasonable tests and examinations required by the Board of Examiners to substantiate the applicant's claims that any proposed new materials, new methods and types of construction comply with the standards of safety established by this code.

105A.1.5.3 The Board of Examiners shall have power to call upon such experts as it deems necessary to consider and report upon the technical matters concerning such application. The engagement of the services of such experts shall be with the consent of and at the expense of the applicant, and the Board of Examiners shall have power to require security for the payment of such expense. Such expense shall be in addition to the required filing fees as set forth in Section 110A, Table 1A-K – Penalties, Hearings, Code Enforcement Assessments. Any official or employee of the City and County of San Francisco called upon by the Board of Examiners shall serve without compensation beyond their normal salary.

105A.1.5.4 The Board of Examiners shall certify the results of examinations and tests, together with its recommendation on the application, to the Building Official. If the Board of Examiners recommends approval, the Building Official shall thereupon approve the materials or methods of construction. The Board of Examiners shall have power to attach such conditions to its recommendations as it deems necessary in the interest of public safety, and the Building Official's approval shall be granted subject to such conditions.

105A.1.6 Board of Examiners' authority with respect to applications for variances from code requirements. Where new materials, new methods and types of construction are not involved, the Board of Examiners shall have authority to consider the application for a permit, the approval of which would require a variance from the provisions of this code.
If the Board of Examiners finds that such variance will not result in a condition less safe and less desirable from the viewpoint of public welfare than would result from the enforcement of compliance with such provisions, it shall recommend to the Building Official the approval of such permit. Upon receipt of such recommendation, the Building Official shall approve such permit. The Board of Examiners may attach to such recommendations any conditions which public safety and welfare may require, and the Building Official in approving such permit shall incorporate such conditions therein.

105A.1.7 Application for consideration by Board of Examiners. All applications to the Board of Examiners shall be made in writing and shall be filed with the Secretary of the Board of Examiners. The Board of Examiners shall act upon each application without unreasonable or unnecessary delay. See Section 110A, Table 1A-K – Penalties, Hearings, Code Enforcement Assessments – for applicable fee.

105A.1.8 Procedure. The Board of Examiners shall establish reasonable rules and regulations for its own procedures not inconsistent with the provisions of this code and the Charter of the City and County of San Francisco. The Board of Examiners, by a majority vote, shall choose its officers, which shall consist of the President and Vice-President.

105A.1.9 Meetings. Meetings of the Board of Examiners shall be held at the call of the Secretary of the Board of Examiners and at such times and places as the Board of Examiners may determine. All meetings of the Board of Examiners shall be public meetings.

105A.1.10 Quorum. Four members of the Board of Examiners shall constitute a quorum, and action of the Board of Examiners shall require the affirmative votes of not less than three members. No member of the Board of Examiners shall pass upon any question in which the member, or any corporation in which the member is a shareholder or holds an interest.

105A.1.11 Decisions by resolution. Every decision and recommendation of the Board of Examiners shall be by resolution filed with the Building Official. A copy shall be mailed to the applicant. A copy shall also be sent to other interested bureaus or departments charged with the enforcement of this code. The Board of Examiners shall arrange for a subscription service to its agenda and decisions, the entire cost of which shall be borne by the subscribers.

105A.1.12 Record of meetings. The Board of Examiners shall maintain a tape recording of each meeting. Upon request, these tape recordings shall be made available for duplication by independent agencies with proper security afforded as determined by the Building Official. All costs of duplication shall be borne by the party requesting duplication.

105A.2 Abatement Appeals Board.

105A.2.1 Establishment. There is hereby established an Abatement Appeals Board, consisting of the seven members of the Building Inspection Commission, to pass upon matters pertaining to housing, building and construction.

105A.2.2 Membership. Members of the Abatement Appeals Board shall be the Building Inspection Commission who are appointed and serve for the terms as prescribed by the Charter of the City and County of San Francisco. The Building Official or designee shall act as Secretary to the Abatement Appeals Board.

105A.2.3 Powers. Except for cases involving disabled access, which shall be heard by the Access Appeals Commission, the Abatement Appeals Board shall have the power to hear and decide appeals from Orders of Abatement after public hearing by the Building Official of Building Inspection, and to hear appeals –regarding- the issuance of a final bill for assessment of costs imposed pursuant to Section 102A upon a showing of substantial error by the Department. Appeals for assessment of cost must be filed by the property owner in writing with the Secretary of the Abatement Appeals Board within 15 days of the mailing of the assessment of cost notice. See Section 110A, Table 1A-D-Standard Hourly Rates, and Table 1A-K – Penalties, Hearings, Code Enforcement Assessments – for applicable fees. The Abatement Appeals Board may uphold, modify or reverse such orders, provided that the public health, safety and public welfare are secured most nearly in accordance with the intent and purpose of this code and the San Francisco Housing Code.

105A.2.4 Procedure. The Abatement Appeals Board shall establish reasonable rules and regulations for its own procedures consistent with the provision of this code and the Charter of the City and County of San Francisco. The Abatement Appeals Board, by majority vote, shall choose its officers which shall consist of the President and Vice-President.

105A.2.5 Quorum. Four members of the Abatement Appeals Board shall constitute a quorum. Any action of the Abatement Appeals Board shall require the concurrence of four members. No member of the Abatement Appeals Board shall pass upon any case in which the member, or any corporation in which the member is a shareholder, or holds an interest.

105A.2.6 Hearings. All hearings of the Abatement Appeals Board shall be public hearings. Within 10 days after the filing of an appeal, the Abatement Appeals Board shall fix the time and place for a hearing, which shall not be more than 30 days after the date of filing. The notice of the hearing of such appeal shall be posted in a conspicuous place upon the property that is the subject of the appeal and shall be served upon the appellant and transmitted to the Building Official of Building Inspection at least 10 days prior to the date set for the hearing. Once an appeal is filed, the order of the Building Official shall be stayed until a decision is rendered.

For good cause shown, one continuance of a hearing may be granted by the Abatement Appeals Board; such continuance shall not exceed 60 days.

105A.2.7 Rehearing. The Abatement Appeals Board may rehear an appeal upon which a decision has been rendered, provided a request for a rehearing has been made in writing within 10 days of the date of issuance of the decision.

105A.2.8 Findings and decisions. The Abatement Appeals Board shall issue its findings and decisions no later than 10 days after the conclusion of the hearing. Such findings and decisions shall within five days thereafter be posted in a conspicuous place upon the property that is the subject of the appeal, served on the appellant, and transmitted to the Building Official.

105A.2.8.1. Failure of appellant to appear. In the event the appellant fails to appear at the hearing or if the Abatement Appeals Board fails to issue its findings and decisions within the time set forth above, or denies the appeal, the order of the Building Official shall be immediately effective from the date the order was issued; however the time that the matter was under appeal shall not be counted toward the time set in the order for compliance.

EXCEPTION: Except in cases of lack of quorum, failure of the Abatement Appeals Board to meet any of the time periods specified herein shall result in the Building Official's order taking effect immediately.

105A.2.8.2 Life-safety hazards. In any appeal of a decision where the Abatement Appeals Board finds that there exists in, on, or near any building, structure or property, any condition constituting a serious and imminent hazard to the life, health, or safety of any person, structure, or property, any decision of the Abatement Appeals Board modifying the order of the Building Official shall provide for immediate protection of the public, and that work to correct each such hazard commence within 30 days and be completed within 90 days after service of such decision. With respect to violations which are not found by the Abatement Appeals Board to constitute a serious and imminent hazard, any decision of the Abatement Appeals Board modifying the order of the Building Official shall provide that the work to repair such violations commence within 60 days and be completed within a reasonable time, not to exceed 18 months.

105A.2.8.3 Moratorium – financial hardship. In any case of extreme financial hardship, the Abatement Appeals Board may grant a moratorium to correct conditions which are not serious and imminent hazards. Such a moratorium shall be granted only to an owner occupant of a single- or two-family dwelling where all such serious and imminent hazards, as found by the Building Official, have been corrected. The decision of the Abatement Appeals Board in any case in which a moratorium is granted shall contain the duration of the moratorium and the conditions for its termination. A copy of the decision granting a moratorium shall be recorded in the Assessor-Recorder's Office.

105A.2.8.4 Moratorium – displacement. Notwithstanding the provisions of this code and the San Francisco Housing Code, the Abatement Appeals Board, upon the written appeal of any person, may grant a moratorium from enforcement of an order of the Building Official made pursuant to Section 102A in order to prevent displacement of low and moderate income persons from affordable housing, if the Board finds that:

1. The Building Official's order from which the appeal is taken was issued after April 1, 1986; and

2. The property is a Group R, Division 1 building as defined in this code; and

3. The building was constructed prior to January 1, 1956; and

4. The condition does not constitute a serious and imminent hazard or a life hazard as defined in Section 213 of this code; and

5. The condition does not violate the Fire Code or any code other than this code and the San Francisco Housing Code; and

6. The condition does not affect adequate egress from the building; and

7. The condition does not endanger the life, limb, health, property, safety, or welfare of the public or the occupants of the building; and

8. Fifty percent or more of the households living in the building are paying annual rent equal to or less than 30 percent of the annual rent of low and moderate income as determined in Section 104A.4 of the Building Code; and

9. The abatement of the condition will have a reasonable probability of resulting in the displacement of occupants who are of low and moderate income as defined above.

105A.2.8.5 Findings. The Board shall serve the Building Official, the property owner, and the person requesting the moratorium if other than the property owner, by sending a copy of its findings and decision by certified mail to such persons at their last known address. A copy of the findings and the decision granting a moratorium shall be recorded in the Assessor-Recorder's Office.

105A.2.8.6 Term of moratorium. The maximum term of the moratorium shall be 10 years from the date that the Board's findings and decision are served on the Building Official. At any time during the term of a moratorium under this section, any person may request that the Abatement Appeals Board extend the moratorium for one or more five-year periods by filing a written request with the Secretary of the Board. The Board shall hold a hearing on the request and shall issue separate findings and decisions regarding each request for an extension. The findings must address the nine criteria listed in this section. Any request for an extension of the moratorium shall be subject to the notice and hearing procedures of this section.

105A.2.8.7 Rescission of moratorium. At any time during the term of a moratorium, any person, including the Building Official, may request that the Abatement Appeals Board rescind the moratorium by filing a written request with the Board. The Board shall hold a hearing on the request and issue separate findings and decisions regarding each such request for a rescission. Any request for a rescission of the moratorium shall be subject to the notice and hearing procedures of this section.

105A.2.8.8 Violations listed. The moratorium shall apply only to those code violations expressly listed therein. All other violations which exist and are not so listed in the findings and decisions granting the moratorium shall be abated in accordance with Section 102A.

105A.2.8.9 Duration. Once the Board's order granting a moratorium is issued, the building is no longer considered a nuisance or a substandard building for the duration of the moratorium with respect to those code violations expressly listed in the Board's findings and decisions.

105A.2.9 Failure to comply. Upon the failure of any owner to comply with the order of the Building Official or the Abatement Appeals Board, the matter shall be referred within five days to the City Attorney's Office for appropriate legal action.

105A.2.10 Compensation. The members of the Abatement Appeals Board shall serve without compensation.

105A.3 Access Appeals Commission.

105A.3.1 Establishment; composition; purpose. Pursuant to the provisions of Section 19957.5 of the Health and Safety Code of the State of California, there is hereby established an Appeals Board to be known as the Access Appeals Commission composed of five members to hear written appeals brought by any person regarding action taken by the Department in the enforcement of the requirements of Part 5.5 (commencing with Section 19955), Division 13 of the Health and Safety Code of the State of California, including the exceptions contained in Section 19957 thereof, as well as action taken by the Department in the enforcement of the disabled access and adaptability provisions of this code.

105A.3.2 Appointments; qualifications; terms; vacancies; compensation. Members of the Access Appeals Commission shall be qualified and appointed as follows:

1. Two members of the Access Appeals Commission shall be persons with a physical disability, two members shall be experienced in construction, and one member shall be a public member. All shall be appointed by the Building Inspection Commission and serve at its pleasure. The terms shall be staggered and the term of each member shall be four years. Members shall continue in office until the expiration of his or her term and until his or her successor is appointed and qualified.

2. Upon a vacancy occurring in the membership of the Access Appeals Commission and upon the expiration in the term of office of any member, a successor shall be appointed by the Building Inspection Commission. When a vacancy occurs for any reason other than the expiration of a term of office, the appointee to fill such vacancy shall hold office for the unexpired term of his or her predecessor. The members of the Access Appeals Commission shall be reimbursed at $125 per meeting attended. The Building Official or his or her designated representative shall act as Secretary of the Access Appeals Commission, without vote and without additional compensation. The Department shall provide necessary staff service to the Access Appeals Commission.

105A.3.3 Powers and duties; finality. The Access Appeals Commission shall conduct hearings on written appeals made under Section 105A.3.4 hereof. In hearing such appeals, the Access Appeals Commission may approve or disapprove the Department's interpretations of Part 5.5, Division 13 of the Health and Safety Code of the State of California and of the disability access and adaptability requirements of this code and actions taken by the Department to enforce said requirements and abate violations. The Commission shall also make determinations on equivalent facilitation, technical infeasibility, unreasonable hardship, extensions of time, and such other matters as Chapter 11D – Mandatory Accessibility Improvements for Buildings with a Place of Public Accommodation may require or authorize. All such approvals or disapprovals shall be final and conclusive as to the Department, in the absence of fraud or prejudicial abuse of discretion. See Section 110A, Table 1A-K – Penalties, Hearings, Code Enforcement Assessments – for applicable fee.

105A.3.4 Form of appeal – action on. All appeals to the Access Appeals Commission shall be made in writing and shall be filed with the Secretary of the Access Appeals Commission. The Access Appeals Commission shall act upon each appeal without unreasonable or unnecessary delay.

105A.3.4.1 Rehearings. The Access Appeals Commission may rehear an appeal upon which a decision has been rendered upon motion of a member of the Access Appeals Commission and upon the affirmative vote of at least three of its members, provided that a request for a rehearing has been made in writing within 10 days of the date of the decision. See Section 110A, Table 1A-K – Penalties, Hearings, Code Enforcement Assessments – for applicable fee.

105A.3.5 Procedure. The Access Appeals Commission shall establish reasonable rules and regulations for its own procedure not inconsistent with the provisions of this code and the Charter of the City and County of San Francisco. The Access Appeals Commission, by a majority vote, shall choose its officers, other than the Secretary.

105A.3.6 Meetings. Meetings of the Access Appeals Commission shall be at such times as the Access Appeals Commission may determine. All meetings of the Access Appeals Commission shall be public meetings.

105A.3.7 Agenda and record. The Access Appeals Commission shall arrange for the maintenance of a record of its agenda, actions and recommendations which shall be available to the public upon request for the cost of reproduction.

105A.3.8 Decisions by resolution. Every decision and recommendation of the Access Appeals Commission shall be by resolution, which shall be retained as part of the Access Appeals Commission's official records. A copy shall be mailed to the appellant.

105A.3.9 Waiver of fee. An exemption from paying the Access Appeals Commission Filing Fees specified in Section 110A, Table 1A-K – Penalties, Hearings, Code Enforcement Assessments – may be granted upon the appellant's filing with the Department a declaration of indigency under penalty of perjury. The declaration shall be made on a form provided by the Department and shall be accompanied by such documentary proof as the Building Official shall require.

105A.3.10 Notice to Mayor's Office of Disability. Materials for each matter to be decided by the Commission shall be sent to the Mayor's Office of Disability, together with a copy of the meeting agenda, at the same time and in the same manner as the materials and agenda are provided to members of the Commission.

105A.4 Code Advisory Committee.

105A.4.1 Establishment. There is hereby created a Code Advisory Committee consisting of seventeen members who are qualified by experience and training to pass upon matters pertaining to the development and improvement of the content of this code and the San Francisco Housing Codes and their related rules and regulations as well as provisions of other parts of the Municipal Code that the Building Official and the Building Inspection Commission determines have an impact on construction permits.

105A.4.2 Functions. Its functions shall be:

1. To review recommendations for code changes made by the Building Official the Building Inspection Commission pursuant to Section 104A.2.11.

2. To develop, review and recommend code changes to the Building Official and the Building Inspection Commission.

3. To review rules and regulations promulgated by the Building Official and the Building Inspection Commission pursuant to Section 104A.2.1.

4. To recommend to the Building Official and the Building Inspection Commission, within 30 days after the effective date of a new edition of a code, which existing Section 104A.2 rules and regulations should remain in effect, be modified or be canceled.

105A.4.3 Membership. The Code Advisory Committee shall consist of 17 members appointed by the Building Inspection Commission to serve at the Building Inspection Commission's pleasure for a three-year term or until a successor is appointed and qualified.

105A.4.3.1 Members. In the event that a vacancy occurs during the term of office of any member of the Code Advisory Committee, a new member shall be appointed in a manner similar to that described herein for new members. The membership shall consist of:

1. A licensed architect whose practice is primarily in the area of major commercial and institutional projects of Type I and II construction.

2. A licensed architect whose practice is primarily in the area of smaller commercial and residential projects of Type III and V construction.

3. A registered civil engineer whose practice is primarily in the area of major commercial and institutional projects of Type I and II construction and who has the authority to use the title "Structural Engineer."

4. A registered civil engineer whose practice is primarily in the area of smaller commercial and residential projects of Type III and V construction.

5. A registered mechanical engineer or licensed mechanical contractor.

6. A registered fire protection engineer who practices in the area of fire protection.

7. A registered electrical engineer or licensed electrical contractor.

8. A representative of a licensed general contractor whose work is primarily in the area of major commercial and institutional projects of Type I and II construction.

9. A representative of a licensed general contractor whose work is primarily in the area of alterations, remodeling or restoration.

10. A representative of a licensed general contractor whose work is primarily the construction of single- and multifamily residential construction for its own account.

11. A commercial property owner or a person practicing in the area of property management.

12. A representative of the general business community.

13. A person qualified in the area of historical preservation.

14. A person, preferably with a disability, who is knowledgeable about disability access regulations.

15. Three at-large members who may, but need not, possess technical skills or knowledge.

The terms "registered and "licensed" shall be understood to mean registered or licensed by the State of California.

The Building Inspection Commission shall make appointments after giving careful consideration to nominations made by technical associations and other organizations, including the San Francisco Chapter of the American Institute of Architects, the Structural Engineers Association of Northern California, the Society of Fire Protection Engineers, the San Francisco District of the Associated General Contractors of California, American Society of Heating, Refrigerating and Air-Conditioning Engineers, Inc., Sheet Metal and Air Conditioning Contractors National Association, San Francisco Bay Area Chapter of the National Association of the Remodeling Industry, National Electrical Contractors Association, the Residential Builders Association of San Francisco, Inc., the San Francisco Chapter of the Building Owners and Managers Association of California, the San Francisco Chamber of Commerce and the Foundation for San Francisco's Architectural Heritage.

The following shall constitute ex officio members of the Code Advisory Committee without vote: The Building Official of the Department, who shall act as Secretary of the Code Advisory Committee, and the Fire Marshal.

105A.4.4 Procedure. The Code Advisory Committee shall establish reasonable rules for its own procedures not inconsistent with the provisions of this code and the Charter of the City and County of San Francisco. The Code Advisory Committee, by a majority vote, shall choose its officers, which shall consist of the Chairperson and the Vice- Chairperson.

105A.4.4.1 Quorum. A majority of the voting members of the Code Advisory Committee shall constitute a quorum. Any action taken by the Code Advisory Committee shall require an affirmative vote of not less than a majority of the Code Advisory Committee members present and voting. No member of the Code Advisory Committee shall pass upon any question in which the member, the firm that employs the member or any corporation in which the member is a shareholder, holds a financial interest.

105A.4.4.2 Meetings. Meetings of the Code Advisory Committee shall be scheduled at a regular place and time but not less than once monthly. The exact time and place shall be established by the

Code Advisory Committee in its rules and regulations of procedure. All meetings of the Code Advisory Committee shall be open to the public.

105A.4.4.3 Agenda and record. The Code Advisory Committee shall arrange for the maintenance of a record of its agenda, actions and recommendations which shall be available to the public upon request for the cost of reproduction.

105A.5 Reserved.

105A.6 Structural Advisory Committee.

105A.6.1 Establishment. There is hereby created a three-member Structural Advisory Committee, to advise the Building Official on matters pertaining to the design and construction of buildings with special features or special design procedures. Upon request by the Building Official, the engineer of record for such a project shall demonstrate to the Structural Advisory Committee how the structural concepts, designs, details, erection methods and quality control will produce a structure that would meet the intent of Section 101A.2.

105A.6.2 Members. For consideration of each building with such special features, the Structural Advisory Committee shall consist of members who are knowledgeable in the structural engineering and construction issues presented by those special features. Members shall be selected from a list of qualified engineers submitted by the Structural Engineers Association of Northern California and approved by the Building Official. One member shall be selected by the Building Official, one member shall be selected by the owner, and the third member shall be selected jointly. Compensation of the Structural Advisory Committee members shall be by the owner. However, when the project for which Committee review is required is located in the Edgehill Mountain Slope Protection Area, as defined by Building Code Section 106A.4.1.2 or the Northwest Mt. Sutro Slope Protection Area as defined by Building Code Section 106A.4.1.3 or is subject to Committee review pursuant to the Slope Protection Act, Building Code Section 106A.4.1.4.5, (a) the Committee shall consist of a structural engineer, a geologist and a geotechnical engineer; (b) the Committee shall consult with an architect, who shall be a voting member of the Committee; (c) the selection of the Committee members shall be as follows: one member shall be selected jointly by the Building Official and the Director of Public Works, one member shall be selected solely by the Building Official and one member shall be selected by the Building Official and the owner from recommendations made by interested persons, including but not limited to residents of the neighborhood surrounding the project location; and (d) to the extent feasible, the Committee members should be selected from a list submitted by the Structural Engineers Association of Northern California.

105A.6.3 Report. The Structural Advisory Committee shall submit to the Building Official a written report which shall include professional opinions concerning, but not limited to, the following:

1. The validity and appropriateness of the structural design concepts and criteria.
2. An evaluation of the structural design of the building or structure to determine its capability to perform satisfactorily beyond the elastic stresses stipulated by the code, with sufficient redundancy to accommodate overloads or failures of specific structural components.
3. The constructability of proposed structural details and erection methods.
4. The sufficiency of the proposed inspection, testing and monitoring to be provided during prior to and during construction.

105A.7 Reserved

105A.8. Appellate authority of the Building Inspection Commission. The appellate authority of the Building Inspection Commission is as set forth in Section D3.750-4 of the San Francisco Charter, as implemented by Chapter 77 of the San Francisco Administrative Code.

(Amended by Ord. 51-16, File No. 150732, App. 4/22/2016, Eff. 5/22/2016, Oper. 6/21/2016)

SECTION 106A – PERMITS

106A.1 Permits required. Except as specified in Section 106A.2, no building or structure regulated by this code shall be erected, constructed, enlarged, altered, repaired, moved, improved, removed, converted or demolished unless a separate permit for each building or structure has first been obtained from the Building Official.
When considering an application for a permit for development of "dwellings" as defined in Chapter 87 of the San Francisco Administrative Code, the Department of Building Inspection shall comply with that chapter which requires, among other things, that the Department of Building Inspection not base any decision regarding the development of "dwellings" in which "protected class" members are likely to reside on information which may be discriminatory to any member of a "protected class" (as all such terms are defined in Chapter 87 of the San Francisco Administrative Code).

106A.1.1 Separate permits required. Where buildings or structures are constructed on top of a base structure, and such structures are likely to have their own addresses or functional identities, separate permits shall be required for the base structure and for each of the top buildings or structures.

106A.1.2 Permit and fees for grading, excavation, or filling of land. The valuation for the permit shall be based on the volume of material to be handled, and on a cost schedule posted in the Department. The permit issuance and plan review fees shall be the same as those for new construction. See Section 110A, Table 1A-A – Building Permit Fees, and Table 1A-B – Other Building Permit and Plan Review Fees. See Chapter 33 and Appendix J for general grading provisions.

106A.1.3 Permits and fees for subsidewalk space. A building permit shall be obtained for construction of subsidewalk space. The fee for said permit shall be the fee set for building permits. See Section 110A, Table 1A-F – Specialty Permit Fees – for applicable fees.
Permits for the use of subsidewalk space, except for subsurface space used to connect a building, structure or property with the San Francisco Bay Area Rapid Transit district facilities, shall be granted after approval by the Building Official and the City Engineer. Permission for the use of subsurface space to connect with the San Francisco Bay Area Rapid Transit District facilities, shall be granted only as set forth in Section 106A.1.3.1. The City may reserve any part of the subsidewalk space for its own use or the use of the public. The Board of Supervisors reserves the right to suspend or annul the privilege of maintaining such subsidewalk space or to exact a license or rental for the use thereof. The granting of a permit to use the subsidewalk space shall carry with it the right to excavate the space and to build the necessary retaining walls. If the street in front of the building is paved, a deposit will be required of the subsidewalk space. See Section 110A, Table 1A-F – Specialty Permit Fees – for required deposit. The deposit will be refunded to the permittee upon the endorsement of the permit issued therefor and a certificate from the Department of Public Works, Bureau of Engineering, certifying to the satisfactory condition of such roadway at the end of two years after the time the pavement was restored. Should the permittee fail to restore any

pavement, the Director of the Department of Public Works may, after 10 days' notice in writing posted on the building, restore the pavement and deduct the cost of such restoration from the deposit. In lieu of the deposit required herein, a bond in the amount of the deposit may be accepted in the manner set forth in Article 8 of the San Francisco Public Works Code.
No permit shall hereafter be issued by any officer, board or commission of San Francisco to make use of the subsidewalk space within the street lines of Market Street between Steuart Street and Castro Street, except a permit may be granted for the use as subsidewalk space for the following:

1. The space lying contiguous to the property line and extending along a line parallel thereto and up to 22 feet distant therefrom wherever such space is located in Market Street between Steuart Street and Van Ness Avenue.

2. The space lying contiguous to the property line and extending along a line parallel thereto and up to 10 feet distant there from wherever such space is located in Market Street between Van Ness Avenue and Castro Street.

Due consideration shall be given to the needs and requirements for the use of subsidewalk space by public utilities.
The remainder of the subsidewalk space is hereby expressly reserved for public use.

106A.1.3.1 Subsurface connection to San Francisco Bay Area Rapid Transit District facilities. Permission to use subsurface space to connect any building or structure or premises with the San Francisco Bay Area Rapid Transit District facilities shall be first obtained from the Board of Supervisors of San Francisco by resolution, prior to filing a permit to construct the connection. The Board of Supervisors reserves the right to suspend or annul the permission to use any subsurface space to connect any building, structure or premises with the San Francisco Bay Area Rapid Transit District facilities or to exact a license or rental for the use thereof. Upon the Board of Supervisors passing a resolution approving the connection, an application for a building permit to construct the connection shall be filed with the Department. The application, together with plans and specifications, shall be referred for approval to the Planning Department, the Department of Public Works, Bureau of Engineering, and any other department having jurisdiction. If approved, the approvals shall be endorsed in writing on the application by the respective departments and bureaus. The Department shall issue a building permit when the application has been approved by the Building Official, and upon payment of all required permit fees. In addition to the building permit and plan checking fees, the deposit required in Section 106A.1.3 shall also be paid to the Department and refunded as set forth in Section 106A.1.3, provided that all work under the building permit has been satisfactorily completed.

106A.1.4 Permits and fees for moving buildings.

106A.1.4.1 General. The applicant for a permit for moving a building shall pay a permit fee for documentation and inspection of the moving work. See Section 110A, Table 1A-F – Specialty Permit Fees – for applicable fee. A permit and plan review fee for work required at the building's new site shall be per Section 110A, Table 1A-A – Building Permit Fees, and Table 1A-B – Building Permit Application and Plan Review Fees.

106A.1.4.2 Permit application for new site. Before a permit may be issued for moving a building, a building permit must be obtained for the necessary alterations and additions to the building on the new site. The application for the alterations at the new site is to be accompanied by complete plans showing floor plans, elevations, plot plan, and such other information as contained in Section 106A.3.3 as may be required by the Building Official.

106A.1.5 Permit and fees for demolition of buildings. A permit shall be required for demolishing any structure. See Section 110A, Table 1A-F – Specialty Permit Fees – and Section 110, Table 1A-L – Public Information – for applicable fees. See Section 3303 for general requirements.

106A.1.6 Permits and fees for chimneys, flues. A flue permit shall be required to erect, construct, alter or repair any chimney or flue except when it is a Type 1 grease hood or is constructed of masonry. A separate flue permit shall be required for each flue or chimney. Grease and masonry flues and chimneys shall require building permits per Section 106A. See Section 110A, Table 1A-F – Specialty Permit Fees – for applicable fees.

106A.1.6.1 Permits for boiler flues. A boiler flue permit shall be required to:

1. **Install, alter, or replace any boiler flue or section thereof;**
2. **Install any approved type heat reclaimer or other approved type device within a boiler gas flue.**

106A.1.7 Permits and fees for temporary buildings or structures. A permit is required for the construction and erection of temporary reviewing stands, bleachers, grandstands and other miscellaneous structures. The Building Official may require that any temporary building or structure be inspected by a registered civil engineer and found to be in compliance with all provisions of this code before it is permitted to be used by the public. See Section 110A, Table 1A-F – Specialty Permit Fees – for applicable fee.

106A.1.8 Garage door permits and fees. A garage door permit shall be required for the installation of such doors in existing buildings. See Section 110A, Table 1A-F – Specialty Permit Fees – for applicable fee.
The provisions of this section shall not apply where structural alterations are made, or are required in connection with the installation of garage doors. This section also shall not apply to the alteration, repair, or replacement of garage doors in public garages. In all these cases, the permit and fee requirements of Sections 106A, 107A and 110A shall apply.

106A.1.9 Permits and fees for signs.

106A.1.9.1 General. A sign regulated under Chapter 31 shall not be erected or altered until a sign permit has been obtained for such work. Application for a permit shall be made at the Department on supplied forms. Where signs are illuminated by electric lighting, a separate permit shall be obtained as required in the Electrical Code. Replacement of copy on the face of a sign, without affecting the structural members or the attachment to a building, structure, or the ground, shall not require a sign permit.

106A.1.9.2 Permit fees. Permit fees for signs shall be based upon job valuation. See Section 110A, Table 1A-A – Building Permit Fees – for applicable fees.

106A.1.9.3 Plan review fees for signs. See Section 110A, Table 1A-A – Building Permit Fees – for applicable fee.

106A.1.10 Permit and fees for residential elevators and lifts.

106A.1.10.1 General. An elevator or lift regulated under Chapter 30 shall not be installed or altered until a building permit has been obtained for such work.

106A.1.10.2 Fees. The permit fees and plan review fees shall be those required in Section 110A, Tables 1A-A and 1A-B. The valuation shall be based on the total installation, including those portions, if any, which are regulated by the State.

106A.1.10.3 Exemption. Elevators regulated by the State of California are exempt from permits and the provisions of this code. However, the elevator shafts and enclosures, and any structural alterations or strengthening work to accommodate the installation, shall comply with the permit and other requirements of this code.

106A.1.11 Permit and fees for boilers. A separate building permit shall be required for a new boiler installation or replacement except where a building permit has been issued which included such work, the fee for which shall be the minimum fee per Section 110A, Table 1A-A – Building Permit Fees. In addition, a permit to operate the boiler is required and shall be charged a fee based on the schedule in Section 110A, Table 1A-M – Boiler Fees. The fee for renewal of a permit to operate shall be based on the same schedule. Such fee shall be paid whether or not a permit to operate is issued. All fees shall be paid at the time of application for permits. Any additional fees billed will be increased to twice the billed amount when payment is not received by the Department within 30 days of billing. Failure to pay required fees will result in cancellation of the issued permit to operate. See Chapter 10 of the Mechanical Code for boiler requirements.

106A.1.12 Permit and fees for change in occupancy or use. Whenever a change in occupancy or use is made, a building permit shall be required to legalize the changed use or occupancy. The fee shall be the minimum fee required for filing for a permit and must be secured prior to the change of occupancy.
In the event any alteration work is required, the alteration permit shall be considered sufficient for this requirement and no additional permit will be required or additional fee required for the change in use or occupancy except as set forth in Section 109A.8.

106A.1.13 Permits and fees for construction of an impervious surface in a front yard setback.
1. General. It shall be unlawful for any person, firm or corporation to commence or proceed with the construction of an impervious surface in a front yard setback area, other than a driveway as defined in the Planning Code Section 136(c) (30), unless a permit is first obtained. See Section 110A, Table 1A-F – Specialty Permit Fees – for applicable fee.
2. Referral to Planning Department. The Department shall refer all applications for a permit pursuant to this section to the Planning Department for a determination regarding the proposed construction's compliance with Sections 132(g) and 136(c) (30) of the Planning Code. The Department may not issue the permit unless Planning determines the proposed construction to be compliant.
3. Penalty for violation. Any person, firm or corporation violating the provisions of this Section shall be guilty of an infraction. Every violation determined to be an infraction is punishable by (1) a fine not exceeding $100 for a first violation, (2) a fine not exceeding $200 for a second violation within one year, and (3) a fine not exceeding $500 for a third violation within one year.

106A.1.14. Damaged apartment houses where residential occupants have been displaced, preliminary information and Action Plan required. Whenever an Apartment House, as defined in the Housing Code, has been damaged by fire or other emergency that results in the displacement of residential occupants, the property owner shall submit to the Department's Building Inspection Division, with a copy to the Housing Inspection Division, the following information and an Action Plan within the timeframe specified. The Department shall include a statement in all applicable Notices of Violation issued pursuant to this Section that allowing the residential occupants to

retrieve their personal property in a safe manner through a visit supervised by the property owner's engineer, general contractor, or other industry professional for a short duration is not in conflict with the issued Notice of Violation.

106A.1.14.1. Information submittal. Within 72 hours of the posting of a Notice of Violation on the subject site, the property owner shall provide the following information in writing:

- **(a) a description of the steps taken and the methods used to stabilize and secure the subject building and premises, including but not limited to the following, as appropriate: (1) fencing the building perimeter, (2) securely barricading all windows, openings, and other points of entry to the building from the outside, (3) assessing the property at least weekly to ensure that no unauthorized entry is occurring and that any fencing and barricades are secure and remain in place, and (4) providing 24-hour security;**
- **(b) if the City has determined that the subject building, or portions thereof, is unsafe for occupancy, a description of the steps taken and the methods used to either secure the personal property of the residential occupants or allow them to retrieve their personal property, including but not limited to the following: (1) fencing the building perimeter, barricading all points of entry, or taking the other steps listed in Section 106A.l.l 4.l (a) above, and (2) obtaining the recommendations of a structural engineer or other appropriate consultant for allowing the residential occupants access to the building or undamaged portions thereof for the purpose of obtaining their personal belongings; and**
- **(c) the name and contact information of the owner or an agent of the owner who is able to respond to questions and concerns from the residential occupants and others.**

106A.l.14.2. Action Plan submittal. Within 30 days from release of the scene by the Fire Department and other emergency responders, the property owner shall submit an Action Plan in the form required by the Department that contains the following elements:

- **(a) a description of the steps taken and the methods used to stabilize and secure the subject building and premises, including supporting documentation by a structural engineer or other industry professional as specified in the Notice of Violation, including but not limited to the following, as appropriate: (1) fencing the building perimeter, (2) securely barricading all windows, openings, and other points of entry to the building from the outside, (3) assessing the property at least weekly to ensure that no unauthorized entry is occurring and that any fencing and barricades are secure and remain in place, and (4) providing 24-hour security;**
- **(b) a summary of the extent of fire or water damage to the building, describing with specificity the damage to individual dwelling units that were occupied prior to the damage by fire or other emergency;**
- **(c) a description of the repairs necessary to bring the building into compliance with any Notices of Violation issued by the Department of Building Inspection, Fire Department, or Health Department;**
- **(d) a general schedule an description of the permits that will be filed to comply with (3) above;**
- **(e) the contact information of the individuals who will perform the work under (3) above, which information shall be updated as necessary and kept current;**
- **(f) an estimated date (month and year) when the displaced residential occupants can reoccupy the building. The estimated date shall be within a time reasonably necessary to accomplish the required repairs;**
- **(g) proof that the owner has complied with the notice requirements of Section 106A. l.14. 3; and**

(h) information about prior complaints, notices of violation, and the status of their abatement or compliance with code requirements.

106A.1.14.3. Updating information. Within 90 days from the submission of the Action Plan to the Department required by Section 106A.1.14.2, and every 90 days thereafter, the property owner shall provide to the Department any new or corrected information concerning items (a) through (h) in Section 106A.1.14. 2 above, including but not limited to any change to the estimated date by which the displaced residential occupants can reoccupy the building.

106A.1.14.4. Notice of filing of Action Plan. Within 72 hours of the filing of the required Action Plan with the Department, the property owner shall (a) post a notice of the filing in a prominent location at the building site and (b) mail or personally deliver a notice of the filing to each displaced residential occupant at their last known location.

106A.1.14.5. Re-inspection of the premises. Following a fire that has resulted in the displacement of residential occupants, the Department shall re-inspect the premises at least every 90 days until the property owner has responded to and abated all pending Notices of Violation. If the property owner does not give the Department access to the premises necessary to conduct such re-inspection(s), the Department shall request assistance from the City Attorney to gain access to the premises or take such other action as the City Attorney deems appropriate.

106A.2 Work exempt from permit. Exemptions from the permit requirements of this code shall not be deemed to grant authorization for any work to be done in any manner in violation of the provisions of this code or any other laws or ordinances of this jurisdiction. A building permit shall not be required for the following:

1. One-story detached accessory buildings or structures used as tool and storage sheds, playhouses and similar uses, provided the projected roof area does not exceed 100 square feet (9.29 m^2).
2. Fences not over 6 feet (1829 mm) high located at the rear and side lot lines at the rear of the property, and all fences not over 3 feet (914.4 m) in height.
3. Amusement devices not on fixed foundations.
4. Movable cases, counters and partitions not over 5 feet 9 inches (1753 mm) high.
5. Retaining walls that are not over 4 feet (1219 mm) in height measured from the bottom of the footing to the top of the wall, unless supporting a surcharge or impounding Class I, II or III-A liquids.
6. Water tanks supported directly upon grade if the capacity does not exceed 5,000 gallons (18 927 L) and the ratio of height to diameter or width does not exceed 2.1.
7. Platforms, sidewalks, walks and driveways when not part of an exit, and not more than 30 inches (762 mm) above grade and not over any basement or story below and which, for residential buildings required to be accessible to persons with disabilities, are not part of a required accessible route.
8. Painting, papering and similar finish work.
9. Temporary motion picture, television and theater stage sets and scenery.
10. Minor repairs to existing interior plaster or wallboard, except when part of a fire-resistive assembly.
11. Prefabricated swimming pools accessory to a Group R, Division 3 Occupancy in which the pool walls are entirely above the adjacent grade and if the capacity does not exceed 5,000 gallons (18 927 L).

12. State-owned buildings under the jurisdiction of the state fire marshal. Unless otherwise exempted, separate plumbing, electrical and mechanical permits will be required for the above-exempted items.

13. Reroofing without the installation, repair or removal of roof sheathing, if the total surface area of the roof reroofed in any 12-month period does not exceed 25 percent of the entire surface area of the roof.

14. Surface mounting of readily removable materials on interior walls.

15. Work performed on structures owned and occupied by the Federal or State government. This exemption shall not apply to privately operated structures erected on government-owned land, or to privately owned land or structures leased to the Federal or State government, or to structures owned and operated by State educational institutions unless such structures are owned and used exclusively for educational purposes or other uses related to the institution's educational purposes, such as student cafeterias or dormitories.

16. Installations or replacement of floor coverings in areas other than bathrooms and toilet rooms not requiring the removal of existing required flooring.

17. Repair and replacement of glazing in conformity with this code, and provided wire glass shall be replaced in kind.

18. Replacement of doors, except garage doors, in all occupancies, provided they are not part of fire- resistive assemblies required by this code.

19. Work performed on structures owned or leased by the City and County of San Francisco where the construction or modification of said structure is financed in whole or in part by the issuance of lease revenue bonds prior to July 1, 1989.

20. See Section 3107.1.1 for exempt signs.

21. See Section J103.2 for grading permit exemptions.

22. See Section 106A.1.10.3 for Elevators regulated by the state exemption.

106A.3.1 Application. To obtain a permit, the applicant shall first file an application therefor in writing on a form furnished by the code enforcement agency for that purpose. Every such application shall:

1. Identify and describe the work to be covered by the permit for which application is made.

2. Describe the land on which the proposed work is to be done by legal description, street address or similar description that will readily identify and definitely locate the proposed building or work.

3. For new buildings or structures, indicate the use or occupancy of all parts of the building or structure for which the proposed work is intended. For alteration work, indicate the proposed use or occupancy and the most current legal use or occupancy of all portions of the building or structure affected by or relevant to the proposed work.

4. Be accompanied by plans, diagrams, computations and specifications and other data as required in Section 106A.3.2.

5. State the valuation of any new building or structure or any addition, remodeling or alteration to an existing building.

6. Be signed by the owner, or the owner's authorized agent, who may be required to submit evidence to indicate such authority. Such agent shall be responsible for advising the owner of all conditions attached to the application by the various approving agencies.

7. Give such other data and information as may be required by the building official.

8. Include, when available, the name, address and telephone number of the owner or contractor. When applicable, State and City license numbers shall be indicated.

9. Contain an agreement by the owner of the premises to hold harmless the City and County of San Francisco and its officials and employees from all costs, liability and damages resulting, whether directly or indirectly, from use or occupancy of the sidewalk, street or

subsidewalk space, or from anything in connection with the work included in the permit. The agreement shall run with the land and be binding on all of the owner's successors in title.

10. Include an affidavit, signed under penalty of perjury, that the owner, or the owner's authorized representative, is not removing a legal or illegal dwelling unit, as defined in the Housing Code, when the work included in the permit is removal of a stove, kitchen, as defined in the Housing Code, or bathroom, as defined in the Housing Code. Such affidavit shall be posted prominently for at least fifteen (15) days in a conspicuous common area within the building where the work is proposed and shall be provided via hand delivery or U.S. mail to all tenants residing in the building.

106A.3.1.1 Application processing. The application, plans, specifications and other information submitted shall be referred for such review and approval as is required under applicable ordinances and laws. Each such reviewing bureau, department or agency shall indicate in a manner determined by the Building Official its approval, approval with conditions, or disapproval.

106A.3.1.2 Transfer of application. Applications are transferable with payment of additional fees when the new owner submits a letter to the Department agreeing to all conditions of approval, stipulations and agreements contained on the application, per Table 1A-D.

106A.3.1.3 Authorization of dwelling units installed without a permit.

(a) Screening required. Prior to filing a permit application to legalize an existing unauthorized dwelling unit under Section 207.3 of the Planning Code, the owner of the building or the owner's authorized agent shall submit the following information to the Department for the purpose of determining whether the unauthorized dwelling unit can comply with the requirements of this Code or other codes administered and enforced by the Department, or whether equivalencies from Code requirements can be obtained:

(1) a Dwelling Unit Legalization Checklist form, created by the Department, together with floor plans for the entire building and a plan showing the location of all structures on the subject lot;

(2) evidence from the San Francisco Water Department, telephone, gas or electric records, written lease agreements, or other evidence acceptable to the Department showing that the dwelling unit for which approval is sought existed prior to January 1, 2013;

(3) an assessment prepared by a licensed contractor, architect, or engineer that outlines a plan to comply with all applicable requirements of the Building Code and other Codes administered and enforced by the Department; and

(4) other information as the Building Official shall require.

(b) Imminent and substantial hazard. If the Department identifies an imminent and substantial hazard as described in Section 102A.16 of this Code during the screening process, the Department shall inform the applicant of the appropriate remedial actions and notifications to tenants. The Department shall not pursue remedial code enforcement actions and notifications to tenants based solely on information provided by the applicant during the screening process, unless the Department identifies an imminent and substantial hazard or the applicant consents.

(c) Application process; required permit(s). After completion of the screening process required by subsection (a) a property owner or the owner's authorized agent may file applications with the Department, Fire Department, or other City department for any building or other permits that are required in order to legalize one existing unauthorized dwelling unit on the property. The

application(s) shall refer explicitly to this Section 106A.3.1.3 and Section 207.3 of the Planning Code. If there is more than one existing unauthorized unit on the site, the owner or agent shall designate the unauthorized unit for which legalization is sought. The approval, issuance, expiration, or cancellation of an application filed pursuant to this Section 106A.3.1.3 and any resulting permits shall be in accordance with the provisions of all City codes, except as provided below. Cancellation or disapproval of the application or any resulting permit shall terminate all rights under this Section created by the application. A dwelling unit is not lawful unless and until all necessary approvals have been obtained.

(d) Notices of violation. If the Department has issued a notice of violation for the unauthorized unit for which legalization is being sought and all violations would be corrected by legalization of the unit, the Director shall:

(1) temporarily suspend the notice of violation and enforcement action upon initiation of the process set forth in subsection (a) by the owner or owner's authorized agent and acceptance of the required applications by the City; and

(2) rescind the notice of violation and remove any related liens on the property if legalization of the unit is approved within one year of initiation of the process set forth in subsection (a).

(e) Funding resources information. The Department shall provide information about the Mayor's Office of Housing and Community Development Code Enforcement Rehabilitation Fund and other potential funding sources that may be available for code compliance.

106A.3.2 Submittal documents. Plans, specifications, engineering calculations, diagrams, soil investigation reports, special inspection and structural observation programs and other data shall constitute the submittal documents for a permit. When such plans are not prepared by an architect, land surveyor, or an engineer, the Building Official may require the applicant submitting such plans or other data to demonstrate that state law does not require that the plans be prepared by a licensed architect, land surveyor, or engineer. The Building Official may require plans, computations and specifications to be prepared and designed by an engineer or architect licensed by the state to practice as such even if not required by State law. Materials submitted by a licensed architect, land surveyor, or engineer must be signed and sealed with an original signature on the first sheet of each set of documents, and facsimile stamps plus the required registration seal of the architect, land surveyor, or engineer on the balance of the sheets.
Two complete sets of plans and specifications and three copies of the soil investigation report (when required) shall be submitted. Additional complete sets of plans and specifications may be required for special permit processing services that may be offered by the City and County of San Francisco.

EXCEPTIONS:

1. The requirements for plans or specifications may be waived by the Building Official, provided that the nature and extent of the proposed construction can be clearly described in writing, and such a description is filed with the application.

2. In addition to all other requirements of Section 106A.3.2, the following requirements shall apply to: (a) applications for construction of new buildings or structures, and to alterations that involve a substantial increase in the building envelope of an existing building or structure, within the Edgehill Mountain Slope Protection Area, created by Building Code Section 106A.4.1.2, and within the Northwest Mt. Sutro Slope Protection Area, created by Section 106A.4.1.3 and (b) application for construction on property subject to the Slope Protection Act created by Building Code Section 106A.4.1.4:
The Building Official may not waive the requirements for submittal documents set forth in Section 106A.3.2.

Submittal documents shall substantiate that the building or structure will comply with applicable codes and regulations.
Submittal documents shall include (1) plans prepared by a State-licensed architect, land surveyor, or engineer and (2) a construction/staging plan establishing that the proposed construction will not compromise the health, safety or welfare of neighboring property owners. Submittal documents shall demonstrate to the satisfaction of the Building Official, based on consultation with and written communications from appropriate City officials, including the Director of the Department of Public Works, that there is sufficient infrastructure (including utilities and streets) to support the proposed residential development and that the proposed emergency vehicle access routes comply with the standards in use by the Fire Department or similar agency in effect at the time the application is submitted.

106A.3.2.1 Incomplete applications. The Department will not process an application which is not completely or properly filled out pursuant to the requirements of this section. When the submittal documents do not contain the information required by this the application shall not be accepted.

106A.3.2.2 Demolition. An application for a permit to demolish a building or structure shall not be deemed complete until (a) the applicant declares under penalty of perjury that every party who has a recorded interest in the property that is the subject of the application has been notified of the filing of the application. See Section 110A, Table 1A-L – Public Information – for fee to defray the cost of maintaining records of such declarations and other attendant costs and (b) the Department receives written notice from the Department of Environment that the Department of the Environment has approved the applicant's waste diversion plan in accordance with Chapter 14 of the Environment Code.

106A.3.2.2.1 Demolition application and notification. Upon receipt of an application which would authorize the tearing down or demolition of a building or structure, the Department shall mail written notice to the owners of properties at least 300 feet (91.44 m) in every direction from the edge of the property on which the proposed demolition work will take place, as shown on the last annual tax roll, and shall provide notice to each residential tenant of the property that is the subject of the application and of the property immediately adjacent to such property. Said notice shall include the street address of the proposed work and the name and address of the property owner and, if known, of the contractor.

106A.3.2.2.2 Notice to interested parties. Any of the following organizations or groups may request notification of the receipt by the Department of an application for a demolition permit and of the issuance thereof:

1. **Architectural or historic preservation or housing conservation groups.**
2. **Recycling companies.**

Such request shall be in writing to the Department, on forms furnished by the Department. The organization or group shall specify the area(s) of the City and County of San Francisco for which notification is requested, and the Building Official shall establish the boundaries of such areas for purposes of such notification. Requests shall be made annually, within 30 days after July 1 of each year. See Section 110A, Table 1A-L – Public Information – for fees. Fees may be prorated by the Department for any requests which are received at other times during the year.

106A.3.2.3 Substantial alterations – Notification, sign posting and affidavits. In addition to any other requirements for notice set forth in this code, the following shall apply:
Any person filing an application to (1) substantially alter, as that term is defined by the Building Official, an apartment house or residential hotel (as defined in Section 41.4(p) of the Administrative Code) that contains five or more dwelling units, or (2) remove a legal or illegal dwelling unit, as

defined in the Housing Code, shall post a sign at least 15 inches by 15 inches (381 mm × 381 mm) in a conspicuous common area of the apartment house or residential hotel for at least 15 days with the following information: notice that the application has been made, the nature of the work to be performed, the means of obtaining information from the Department, and the procedure for appealing the issuance of building permits. When the permit application proposes to remove a legal or illegal dwelling unit, the posted sign shall also contain a list of tenant counseling or legal services that can provide assistance to tenants with understanding and participating in the City's processes, and notice of such application shall be delivered via hand delivery or U.S. mail to all tenants in the building. Such notice shall also include contact information for translation services into Spanish, Chinese, and Russian. In occupied residential unreinforced masonry buildings, required signs shall also include specified information provided by the Building Official. The applicant shall thereafter submit an affidavit signed under penalty of perjury stating that the sign has been posted as required by this section. See Section 110A, Table 1A-L – Public Information – for fee to defray the cost of maintaining records of said affidavits. The Building Official shall not approve the application until this affidavit is submitted. If there is reason to believe that the sign was not posted as required, the Building Official shall investigate the matter, shall provide the applicant an opportunity to respond to any complaint of noncompliance, shall determine whether the requirements of this section have been substantially met, and shall cancel an application or revoke the permit if it is determined they have not been substantially met.

106A.3.2.4 Hazardous Substances.

106A.3.2.4.1 Soil and/or groundwater sampling and analysis required. Applicants for any building or grading permit which involves the disturbance of at least 50 cubic yards (38.23 m^3) of soil shall comply with the requirements for soil and/or groundwater sampling and analysis of Article 22A of the Public Health Code, unless such property is subject to Health Code 22A.9 when any part of the work will occur ~~either~~

(a) bayward of the 1851 high-tide line as indicated on the Map of the City and County of San Francisco (adopted June 27, 1986) (see Figure 1A-1) which is maintained for public distribution by the Building Official~~;~~
(b) ~~or~~ in any area of the City designated by the Director of Public Health under Article 22A of the Health Code;
(c) on any lot within the City either presently or previously zoned for industrial use as defined in Article 22A of the Health Code;
(d) on any lot within the City either presently or previously permitted for industrial use;
(e) on any lot within the City within 150 feet of any of the elevated portions of the following highways: U.S. Highway 101, Interstate 80, Interstate 280;
(f) on any lot in the City known or suspected by the Department of Public Health to contain hazardous substances in the soil and/or groundwater, using the definition of hazardous substance contained in Article 22A of the Health Code, or;
(g) on any lot of the City known or suspected by the Department of Public Health to contain or to be within 100 feet of an underground storage tank.

Note: Figure 1A-1 is included at the end of this chapter.

106A.3.2.4.2 Permit approval.

(a) Except as provided in subsection (b), no building permit application subject to the requirements of this Section shall be considered acceptable for review and approved until the Department receives written notification from the Director of Public Health that the applicant has complied with all applicable provisions of Article 22A of the Health Code that can be completed without a permit, or that the requirements have been waived.

(b) Subsection (a) does not apply to the following extent:

(1) The Building Official may consider an application acceptable for review and issue a site permit pursuant to Section 106A.3.4.2 prior to the time an applicant complies with this Section.

(2) The Building Official may consider an application acceptable for review and issue site permit addenda and other permit(s) to undertake soil sampling or mitigation measures to comply with this section.

106A.3.2.4.3 No time limits. For the purposes of completing the requirements of this Section, the time limitations set forth in Section 106A.3.7 of the San Francisco Building Code do not apply.

106A.3.2.4.4 Permit notification and warning.

(a) The Building Department shall provide information to all permit applicants of Bay Area Air Quality Management District and California Air Resources Board regulations, as well as San Francisco Health Code Article 22B and Building Code requirements regarding construction dust control to mitigate potential adverse public health effects from dust in general, and from naturally occurring asbestos that may be released during construction activities.

(b) All building permits and grading permits issued by the Building Department under this Section 106A.3.2.4 shall bear the following printed warning:

WARNING

Under San Francisco Building Code Section 106A.3.2.4.2, certain building permits may be issued only after the permittee analyzes the soil and/or groundwater for the presence of hazardous substances and, where applicable, the Department of Public Health has approved the permittee's site mitigation plan. In issuing this permit, neither the City nor any of its officers or employees make any representation that the soil and/or groundwater on or about the site is free from the presence of hazardous substances. Nor does the City's implementation of this process relieve any person from their duties and responsibilities relating to hazardous substance contamination under state and federal low. Neither subsurface soil analysis under Building Code Section 106A.3.2.4.2 nor the issuance of this permit is intended to alter extinguish, or transfer these responsibilities.

106A.3.2.5 Hunters Point Shipyard.

106A.3.2.5.1 Compliance required. Applicants for any building or grading permit for Hunters Point Shipyard, which involves subsurface disturbance of soil or the extraction or management of groundwater, except where such permit is for purposes of environmental characterization, and except, in the case of property determined by the applicable ROD to be suitable for unrestricted residential use, where such permit involves subsurface disturbance of less than 50 cubic yards (38.23 m^3) of soil, shall comply with the requirements of Article 31 of the Health Code. Hunters Point Shipyard is that area of the City and County of San Francisco shown on Article 31 Map-Figure 1, which is maintained for public distribution by the Building Official. A copy of said Figure is on file with the Clerk of the Board of Supervisors in File No. 100577.

106A.3.2.5.2 Permit approval. No building permit application subject to the requirements of this section shall be deemed to be complete until the Department receives written notification from the Director of Public Health that the applicant has complied with all applicable provisions of Article 31 of the Health Code. Approvals or conditions imposed in writing by the Department of Public Health shall become conditions of the permit issued by the Department, and violation of such approvals or conditions shall be deemed a violation of the permit.

EXCEPTION:

1. The Building Official may issue a site permit pursuant to Section 106A.3.4.2 prior to the time an applicant complies with this section.

2. Site permit addenda and other permit(s) may be issued to excavate soil or undertake soil sampling or implement other requirements of Article 31 of the Health Code.

106A.3.2.5.3 No time limits. For the purposes of completing the requirements of this section, the time limitations set forth in Section 106A.3.7 of the San Francisco Building Code do not apply.

106A.3.2.5.4 Permit notification. All building permits and grading permits issued by the Department of Building Inspection shall bear notice of the above requirements and of the permittee's responsibility to comply.

106A.3.2.6 Construction dust control.

106A.3.2.6.1 Dust control required. All applicants for a building, demolition, excavation, grading, foundation, or other permit required by this Code to construct a new building, to demolish a building, to substantially alter or to add to an existing building shall comply with the requirements for dust control and, in addition, for projects over a half acre the applicant will be required to submit a Dust Control Plan for approval by the San Francisco Health Department as set forth in Article 22B of the San Francisco Health Code.

106A.3.2.6.2 Permit approval. For projects of over one half acre in size, no building or other permit application subject to the requirements of this section shall be approved until the Department of Building Inspection receives either

(a) written notification from the Director of Public Health that the applicant either has a site- specific dust control plan for the project approved by the Director of Public Health or the Director of Public Health has waived the requirement or

(b) the applicant qualifies as an interior only tenant improvement project that will not produce exterior visible dust and therefore is exempt from complying with Article 22B of the San Francisco Health Code.

EXCEPTION: The Director may issue a site permit pursuant to Section 106A.3.4.2 prior to the time an applicant complies with this section.

106A.3.2.6.3 General dust control requirements.

(a) All site preparation work, demolition or construction activities within the City and County of San Francisco that have the potential to create dust or will expose or disturb more than 10 cubic yards or 500 square feet of soil shall comply with the requirements of this Section whether or not the activity requires a permit from the Department of Building Inspection.

(b) For projects over one half acre in size, the project sponsor shall designate a person or persons who will be responsible for monitoring compliance with dust control requirements. The designated person or persons shall be on the site or available by telephone or other means during all times that site preparation, demolition or construction activities may be in progress, including holidays and weekends. The name and telephone number where such person or persons may be reached at all times shall be provided to the Director and to the Director of Public Health prior to commencement of work on the project.

(c) The project sponsor and the contractor responsible for construction activities at the project site shall use the following practices to control construction dust on the site or other practices that result in equivalent dust control that are acceptable to the Director.

(1) Water all active construction areas sufficiently to prevent dust from becoming airborne. Increased watering frequency may be necessary whenever wind speeds exceed 15 miles per hour. Reclaimed water must be used if required by Article 21, Section 1100 et seq. of the San Francisco Public Works Code. If not required, reclaimed water should be used whenever possible.

(2) Provide as much water as necessary to control dust (without creating run-off) in any area of land clearing, earth movement, excavation, drillings, and other dust-generating activity.

(3) During excavation and dirt-moving activities, wet sweep or vacuum the streets, sidewalks, paths, and intersections where work is in progress at the end of the workday.

(4) Cover any inactive (no disturbance for more than seven days) stockpiles greater than ten cubic yards or 500 square feet of excavated materials, backfill material, import material, gravel, sand, road base, and soil with a 10 mil (0.01 inch) polyethylene plastic or equivalent tarp and brace it down or use other equivalent soil stabilization techniques.

(5) Use dust enclosures, curtains, and dust collectors as necessary to control dust in the excavation area.

106A.3.2.6.4 Large projects. If the project is over one half acre in size and the project does not qualify for an interior only tenant improvement project exemption or the Department of Public Health has not issued a waiver for a site-specific dust control plan for the project; construction, demolition, excavation, grading, foundation work, or other permitted activities may not commence until the owner or the owner's agent has submitted to the Department a copy of the Director of Public Health's written approval of the dust control plan. All site preparation and construction activities on the job site shall comply with the general requirements for dust control and the site-specific dust control plan approved by the Director of Public Health. The failure to comply with all provisions of the approved site-specific dust control plan shall be considered a violation of this Code.

106A.3.2.6.5 Waiver of requirements for compliance for small sites; rescission of waiver. For sites less than a half acre in size:

(a) The Director may waive these requirements if the applicant demonstrates to the Director's satisfaction that the proposed site preparation, demolition or construction activities are unlikely to result in any visible windblown dust.

(b) If at any time, contrary to the applicant's assertions, the construction activities produce visible windblown dust, the Director may issue a written order rescinding the waiver. A copy of the rescission order shall be personally served on the owner of the property at the address on file with the Department of Building Inspection and posted on the job site.

(c) If the Director orders rescission of the waiver, the owner of the property and the contractor or other persons responsible for construction activities at the site shall comply immediately with the above dust control requirements.

106A.3.2.6.6 Permit notification. All building, demolition, excavation, grading, foundation, or other permit subject to this section issued by the Department of Building Inspection shall bear notice of the above requirements and of the owner's responsibility to control construction dust on the site.

106A.3.2.6.7 Violations. Upon receipt of complaints, the Director is authorized to administer and enforce all provisions of this Section and may enforce the provisions of this Section by any lawful means available for such purpose, including taking actions authorized pursuant to Section 103 of this Code.

106A.3.2.6.8 Fees. The Department shall determine and recommend to the Board of Supervisors the amount of fee that is required to compensate the Department for the costs of enforcing these dust control requirements.

106A.3.3 Information on plans and specifications. Plans and specifications shall be drawn to scale on substantial paper of a size not less than 11-inch by 17-inch (279.4 mm × 431.8 mm) and shall be

of sufficient clarity to indicate the location, nature and extent of the work proposed and show in detail that it will conform to the provisions of this code and all relevant laws, ordinances, rules and regulations. Specific plans and information required shall include any of the following that is appropriate for the work being proposed:

1. The Assessor's block and lot number on the first sheet or page of each set of plans and other submittal documents.

2. A dimensioned plot plan showing sidewalk widths, street widths, lot lines, locations of proposed or existing buildings or structures on the property, and full widths, heights and setbacks of buildings on adjacent properties where their locations or heights affect the code requirements of the subject building or structure. Locations of parking or loading spaces and of aboveground hydrants and utility poles shall also be shown. The Building Official may require the owner to have the lot surveyed and staked by a registered land surveyor or registered civil engineer so that the proper location of the building on the lot may be determined. A copy of this survey shall be filed with the application for the permit.

3. All existing and future finished grades for new buildings or structures and additions to existing buildings or structures, including official curb and street grades.

4. Complete dimensioned exterior elevations showing types of wall materials, locations and sizes of wall openings, roof heights and setbacks from property lines. The existing and future exterior grade profiles on each side of the building extending to any adjoining buildings, structures or properties which might be affected by this work shown on the elevations unless a topographic map prepared by a licensed surveyor is submitted.

5. Dimensioned architectural floor plan for each floor, basement and roof unless the floor plans are identical. The scale shall be not less than 1/8 inch (3.175 mm) to 1 foot (304.8 mm) unless otherwise permitted by the Building Official. The floor plan shall show the gross area of each use area on each floor, and the total area of each floor. Structural, mechanical and other detailed information shall not be superimposed unless the resultant floor plans are clearly legible and understandable.

6. For alteration work, all existing partitions and construction that are to be removed or altered and all that are to remain unchanged.

7. Identification on the architectural floor plans of the use or occupancy classifications of all new and existing areas of the building.

8. Cross-sections as necessary, including information on location and depth of footings of adjacent buildings or structures which might be affected by this work.

9. Information regarding all architectural and structural materials to be installed in the building.

10. Details of all fire-resistive assemblies and elements, and provisions for maintaining the integrity of fire-resistive assemblies or elements where penetrated.

11. Information regarding the installation, location and support of building utilities, including plumbing systems, and electrical equipment, wiring and systems.

12. Structural plans and calculations detailing all components of the vertical load carrying system, including joists, beams, girders, columns, bearing walls and locations and depths of footings. Connection details and cross-sections to show how the loads are transferred and carried from the roof to the foundation. Live load clearly designated on the plan for each use area.

13. Structural plans and calculations detailing all elements of the lateral force resisting system, including horizontal and vertical diaphragms, connections and details that completely identify the lateral force load path from the roof to the foundation.

14. Special inspection and structural observation program required by Sections 106A.3.5, 1704 and 1709.

15. Geotechnical report when work involves significant grading, excavation or fill, or uses special foundations; or when the site is included in the State of California Seismic Hazard

Zones Map, Special Soils Map or other area identified by the Building Official. See Appendix J, for additional grading permit requirements.

16. Hydraulic design drawings and calculations for sprinkler systems and standpipes.

17. Information on plans demonstrating compliance with energy conservation requirements.

18. Information on plans demonstrating compliance with applicable sound transmission requirements.

19. Information on plans demonstrating compliance with applicable disabled access requirements.

20. Information on plans demonstrating compliance with water conservation and reclamation requirements.

21. Landscaping and irrigation plans, when required by the Planning Department, Department of Public Works or other agencies.

22. Photographs when required by the Planning Department or other agencies.

23. For a building that is an unsafe structure as defined in Section 102A, sufficient information to show how all unsafe conditions will be corrected.

24. All other information necessary for determining compliance with applicable codes and regulations.

106A.3.4 Architect or engineer of record.

106A.3.4.1 General. When it is required that documents be prepared by an architect or engineer, the building official may require the owner to engage and designate on the building permit application an architect or engineer who shall act as the architect or engineer of record. If the circumstances require, the owner may designate a substitute architect or engineer of record who shall perform all of the duties required of the original architect or engineer of record. The building official shall be notified in writing by the owner if the architect or engineer of record is changed or is unable to continue to perform the duties.

The architect or engineer of record shall be responsible for reviewing and coordinating all submittal documents prepared by others, included deferred submittal items, for compatibility with the design of the building.

106A.3.4.2 Site permit. A site permit may be issued for the construction or major alteration, as that term is defined by the Building Official, of a building or structure upon approval of preliminary drawings and before the entire working drawings and specifications of the building or structure have been completed and submitted for approval.

Such preliminary drawings and specifications shall clearly indicate the nature, character and extent of the work proposed. The application procedure shall comply with Sections 106A.1 through 106A.4 except for the completeness of plans. The permit issuance fees and plan review fees shall be as set forth in Section 110A, Table 1A-A – Building Permit Fees, and Table 1A-B – Other Building Permit and Plan Review Fees, and shall be calculated on the basis of the total valuation of the work. No construction work shall be done under the site permit. Construction may proceed after the appropriate addenda have been issued. In no case shall construction exceed the scope of the issued addenda.

Site Permit must be issued prior to submittal of 1st addendum.

Plans for construction may be divided and submitted in accordance with an addenda schedule submitted on the site permit drawings or on the first addendum drawings. See Section 110A, Table 1A-B – Other Building Permit and Plan Review Fees – for applicable fee.

The holder of such permit and addenda shall proceed with approved addenda work at the permittee's own risk, without assurance that approvals for the remaining addenda or for the entire building or structure will be granted.

Each addendum must be approved and issued before work shown on that addendum may commence. The time allowed for review, approval and issuance of all addenda is governed by the maximum time allowed per Section 106A.4.4 and Table B – Maximum Time Allowed to Complete All Work Authorized by Building Permit. The extension times may be applied upon payment of fee per Section 110A, Table 1A-J – Miscellaneous Fees. If all required addenda are not approved and issued by the maximum time allowed, the site permit, all previously approved addenda, and all remaining addenda shall be deemed to be canceled. When a site permit has been canceled, an alteration work application shall be required to resume processing. The provisions of Section 107A.3.3 shall apply to such alteration work application.

106A.3.5 Inspection and observation program. When special inspection is required under Chapter 17, the architect or engineer of record shall prepare an inspection program that shall be submitted to the building official for approval prior to issuance of the building permit. The inspection program shall designate the portions of the work that require special inspection and the name or names of the individuals or firms who are to perform the special inspections, and indicate the duties of the special inspectors.
The special inspector shall be employed by the owner, the engineer or architect of record, or an agent of the owner, but not the contractor or any other person responsible for the work.
When structural observation is required under Chapter 17, the inspection program shall name the individuals or firms who are to perform structural observation and describe the stages of construction at which structural observation is to occur.
The inspection program shall include samples of inspection reports and provide time limits for submission of reports.

106A.3.6 Permit facilitator. Any permit applicant may use the services of a Permit Facilitator. The Permit Facilitator shall be under the jurisdiction of the Building Official. The duties of the Permit Facilitator include distributing permit application submittals to various review disciplines, departments or agencies; and providing the project sponsor with a single point of contact regarding permit application status, procedures or requirements. The fee for such service shall be per Table 1A-B – Other Building Permit and Plan Review Fees – and shall be paid upon filing of a permit application.

106A.3.7 Application expiration. The Building Official may hold in abeyance or reject any application, plans, or specifications filed which in the Building Official's opinion, do not provide the necessary information in a clear and concise manner as required in Section 106A.3.3, and shall cancel such an application upon the expiration of the time period set forth per Table A.
[i]At the time the application has been deemed acceptable for building plan review by the Department of Building Inspection, any corrections, additional information, plans or documents that are necessary to complete the processing by the Department of Building Inspection shall be submitted and approved within the following time limitations:

TABLE A – APPLICATION EXPIRATION

Valuation	Time Limitation	Extension Limitation
$1.00 to $1 million	360 calendar days	360 calendar days
Over $1 million	720 calendar days	720 calendar days

[ii]The time limitation shall apply until the application has been approved and permit is issued. A one-time extension per Table A may be granted by the Building Official at any point during the approval process, upon written request by the applicant and payment of fee. Additional extensions

may be granted by the Building Official prior to extension expiration upon written request from the applicant and payment of fee. See Section 110A, Table 1A-J – Miscellaneous Fees – for applicable fee. In the event an extension of time extends the life of an application beyond the effective date of the adoption of a new code, the Building Official may require that all or part of the application be subject to the provisions of the new code and payment of an additional plan review fee per Table 1A-A – Building Permit Fees. In the event the application has not been approved and issued within 60 days before the end of the stated time period in Table A, the Department shall notify the applicant that the application will be canceled in 60 days unless the application is extended. An application which exceeds the stated or extended time period after such notice shall be deemed canceled without further action by the Department.

EXCEPTIONS:

1. For applications resulting from enforcement actions initiated by the Building Official to abate code violations, the above time limits shall be reduced to 30 days and 10 days, respectively. The Building Official may grant an extension for hardship or procedural error. Upon cancellation, such cases shall be referred to the City Attorney for legal action.

2. The above time limits shall not apply to applications which are subject to the work without permit investigation fee per Section 110A, Table 1A-K – Penalties, Hearings, Code Enforcement Assessments. Such applications shall be canceled only through specific action by the Building Official.

3. The above time limits shall be suspended whenever an application is returned to the Planning Department for review due to a design change that the Building Code(s) requires.

106A.3.8 Disapproval of application. Any application that does not meet the requirements of this code or any other laws, ordinances or regulations enforced by any interested departments or agencies shall be disapproved by the Building Official or upon request by the applicant. If such a request is not made by the applicant to disapprove an application, the Building Official shall notify the applicant that the application will be disapproved in 60 days and the application revoked.

106A.3.8.1 Withdrawal of application. Applications filed for permits may be withdrawn by the owner, provided that no part of the work proposed on the application has been performed. All applicable fees must be paid before an application can be withdrawn.

106A.4 Permits issuance.

106A.4.1 Issuance. The application, plans, specifications, computations and other data filed by an applicant for a permit shall be reviewed by the building official. Such plans may/shall be reviewed by other departments of this jurisdiction to verify compliance with any applicable laws under their jurisdiction. If the Building Official finds that the work described in an application for a permit and the plans, specifications and other data filed therewith conform to the requirements of this code and other pertinent laws and ordinances, and that the fees specified in Section 107A have been paid, the building official shall issue a permit therefor to the applicant.

[iii]When the building official issues the permit where plans are required, the building official shall stamp each page of the plans and the first page of the specifications APPROVED. Such approved plans and specifications shall not be changed, modified or altered without authorizations from the building official, and all work regulated by this code shall be done in accordance with the approved plans.

The building official may issue a permit for the construction of part of a building or structure before the entire plans and specifications for the whole building or structure have been submitted or approved, provided adequate information and detailed statements have been filed complying with all pertinent requirements of this code. The holder of a partial permit shall proceed without assurance that the permit for the entire building or structure will be granted.

106A.4.1.1 Transfer of permit. Permits are transferable without payment of fees per Table 1A-D when the new owner submits a letter to the Department agreeing to all conditions of approval, stipulations and agreements contained on the approved application.

106A.4.1.2 Edgehill Mountain Slope Protection Area.

106A.4.1.2.1 Creation. There is hereby created the Edgehill Mountain Slope Protection Area, which is generally bounded by Garcia Avenue, Vasquez Avenue, Kensington Way and Ulloa Street and traversed by Edgehill Way. The Edgehill Mountain Slope Protection Area is comprised of the following Assessor's Block Numbers: 2875, 2876, 2923, 2933, 2934, 2935, 2936A and 2936B. Heightened review of certain permit applications, as provided in this section, shall be made in this area.

106A.4.1.2.2 Purpose. Because landslides, earth movement, ground shaking and subsidence are likely to occur on or near the Edgehill Mountain Slope Protection Area, causing severe damage and destruction to public and private improvements, the Board of Supervisors finds that the public health, safety and welfare is best protected if the Building Official of Building Inspection causes permit applications within the Edgehill Mountain Slope Protection Area for either (1) construction of new buildings or structures or (2) alterations that involve a substantial increase in the envelope of an existing building or structure, to be peer reviewed for structural integrity and effect on hillside stability. The requirements herein for projects in the Edgehill Mountain Slope Protection Area are in addition to all other applicable laws and regulations, including any and all requirements for environmental review under the California Environmental Quality Act; compliance with the requirements contained herein does not excuse a project sponsor from compliance with any other applicable laws and regulations.

106A.4.1.2.3 Mandatory review by Structural Advisory Committee and other city officials. All permit applications submitted to the Central Permit Bureau for construction of new buildings or structures or alterations that involve a substantial increase in the envelope of an existing building or structure (as determined by the Building Official) within the Edgehill Mountain Slope Protection Area shall be submitted to and reviewed by the Structural Advisory Committee, as defined by Building Code Section 105A.6. No permits for such properties located within the Edgehill Mountain Slope Protection Area shall be issued unless and until the Building Official has consulted with and received a written communication from representatives of the Department of Planning, Department of Public Works and Fire Department, each of whom has made a visit to the site for which the project is proposed, and the Building Official has received a written report from the Structural Advisory Committee concerning the safety and integrity of the proposed design and construction. As part of its review, the Structural Advisory Committee shall consider the effect that construction activity related to the proposed project will have on the safety and stability of the Edgehill Mountain Slope Protection Area.

106A.4.1.2.4 Mandatory denial by Building Official. In the event that the Structural Advisory Committee determines that there is a reasonable likelihood that the proposed design and construction would result in unsafe conditions or would increase the likelihood of hillside instability, and such unsafe conditions or instability cannot be mitigated to the satisfaction of the Structural Advisory Committee, the Building Official shall deny the permit. The Building Official's decision to deny the permit is appealable only to the Board of Appeals.

106A.4.1.3 Northwest Mt. Sutro Slope Protection Area.

106A.4.1.3.1 Creation. There is hereby created the Northwest Mt. Sutro Slope Protection Area, which is generally bounded on the east by Crestmont Drive and its undeveloped northern extension, on the south along Oak Park to its intersection with Christopher Boulevard, west to Warren Drive, north along Warren Drive to the 6th Avenue and Kirkham Street intersection, and Kirkham Street in an easterly direction to its end at the undeveloped extension of Crestmont Drive. The Northwest Mt. Sutro Slope Protection Area is comprised of the following Assessor's Block Numbers: 1850, 1851, 2635, 2636, 2638, 2674, 2675, 2676, 2677, and 2686. Heightened review of certain permit applications, as provided in this section, shall be made in this area.

106A.4.1.3.2 Purpose. Because landslides, earth movement, ground shaking and subsidence are likely to occur on or near the Northwest Mt. Sutro Slope Protection Area, causing severe damage and destruction to public and private improvements, the Board of Supervisors finds that the public health, safety and welfare is best protected if the Building Official of Building Inspection causes permit applications within the Northwest Mt. Sutro Slope Protection Area for either (1) construction of new buildings or structures or (2) alterations that involve a substantial increase in the envelope of an existing building or structure, to be peer reviewed for structural integrity and effect on hillside stability. The requirements herein for projects in the Northwest Mt. Sutro Slope Protection Area are in addition to all other applicable laws and regulations, including any and all requirements for environmental review under the California Environmental Quality Act; compliance with the requirements contained herein does not excuse a project sponsor from compliance with any other applicable laws and regulations.

106A.4.1.3.3 Mandatory review by Structural Advisory Committee and other city officials. All permit applications submitted to the Central Permit Bureau for construction of new buildings or structures or alterations that involve a substantial increase in the envelope of an existing building or structure (as determined by the Building Official) within the Northwest Mt. Sutro Slope Protection Area shall be submitted to and reviewed by the Structural Advisory Committee, as defined by Building Code Section 105A.6. No permits for such properties located within the Northwest Mt. Sutro Slope Protection Area shall be issued unless and until the Building Official has consulted with and received a written communication from representatives of the Department of Planning, Department of Public Works and Fire Department, each of whom has made a visit to the site for which the project is proposed, and the Building Official has received a written report from the Structural Advisory Committee concerning the safety and integrity of the proposed design and construction. As part of its review, the Structural Advisory Committee shall consider the effect that construction activity related to the proposed project will have on the safety and stability of the Northwest Mt. Sutro Slope Protection Area.

106A.4.1.3.4 Mandatory denial by Building Official. In the event that the Structural Advisory Committee determines that there is a reasonable likelihood that the proposed design and construction would result in unsafe conditions or would increase the likelihood of hillside instability, and such unsafe conditions or instability cannot be mitigated to the satisfaction of the Structural Advisory Committee, the Building Official shall deny the permit. The Building Official's decision to deny the permit is appealable only to the Board of Appeals.

106A.4.1.4 The Slope Protection Act. This Section of the San Francisco Building Code shall be known as the Slope Protection Act.

106A.4.1.4.1 Creation. The Slope Protection Act shall apply to all property within San Francisco that falls within certain mapped areas of the City, except those properties already subject to the Edgehill Mountain Slope Protection Area or the Northwest Mt. Sutro Slope Protection Area. For

purposes of this Section "property" shall mean a legal lot of record. Heightened review of certain permit applications, as provided in this section, shall be given to all property subject to this Act.

106A.4.1.4.2 Purpose. Because landslides, earth movement, ground shaking and subsidence are likely to occur on or near steeply sloped properties and within other defined areas causing severe damage and destruction to public and private improvements, the Board of Supervisors finds that the public health, safety and welfare is best protected if the Building Official causes permit applications for the construction of new buildings or structures and certain other construction work on property subject to the Slope Protection Act to undergo additional review for structural integrity and effect on slope stability. The requirements for projects subject to the Slope Protection Act are in addition to all other applicable laws and regulations, including any and all requirements for environmental review under the California Environmental Quality Act; compliance with the requirements contained herein does not excuse a project sponsor from compliance with any other applicable laws and regulations.

106A.4.1.4.3 Scope. Properties are subject to these requirements where any portion of the property lies within the areas of "Earthquake-Induced Landslide" in the Seismic Hazard Zone Map, released by California Department of Conservation, Division of Mines and Geology, dated November 17, 2000, or amendments thereto; or within the "Landslide Hazard Areas" mapped as "Landslide Locations" in Figure 4 of the San Francisco Seismic Safety Investigation report prepared by URS/John A. Blume & Associates, Engineers, June 1974, or any successor map thereto.

106A.4.1.4.4 Mandatory submittal of reports and geotechnical engineering review. All permit applications submitted to the Department of Building Inspection for construction subject to the Slope Protection Act shall include report(s) prepared and signed by both a licensed geologist and a licensed geotechnical engineer identifying areas of potential slope instability, defining potential risks of development due to geological and geotechnical factors, and drawing conclusions and making recommendations regarding the proposed development. These reports shall undergo design review by a licensed geotechnical engineer. Such design review shall verify that appropriate geological and geotechnical issues have been considered and that appropriate slope instability mitigation strategies, including drainage plans if required, have been proposed.

106A.4.1.4.5 Structural Advisory Committee and mandatory denial by Building Official. After reviewing all submitted information pursuant to Section 106A.4.1.4.4, the Director, in his or her sole discretion, may require that the permit application be subject to review by a Structural Advisory Committee, as defined by Building Code Section 105A.6. When subject to such Structural Advisory Committee review, no permits shall be issued unless and until the Building Official has consulted with and received a written communication from representatives of the Department of Planning, Department of Public Works and Fire Department, each of whom has made a visit to the site for which the project is proposed, and the Building Official has received a written report from the Structural Advisory Committee concerning the safety and integrity of the proposed design and construction. As part of its review, the Structural Advisory Committee shall consider the effect that construction activity related to the proposed project will have on the safety and stability of the property subject to the Slope Protection Act and properties within the vicinity of such property. In the event that the Building Official establishes a Structural Advisory Committee, and such Committee determines that there is a reasonable likelihood that the proposed design and construction would result in unsafe conditions or would increase the likelihood of hillside instability, and such unsafe conditions or instability cannot be mitigated to the satisfaction of the Committee, the Building Official shall deny the permit. The Building Official's decision to deny the permit is appealable only to the Board of Appeals.

106A.4.1.4.6 Regulations to implement the Slope Protection Act. The Building Official is hereby authorized to adopt rules, regulations, administrative bulletins, or other written guidelines to assist the Department in implementing this Section, including, but not limited to, requirements for applicants to demonstrate that a project site is not subject to the Slope Protection Act.

106A.4.2 Retention of approved construction documents. One set of approved construction documents shall be provided to the party obtaining the permit. The owner shall be responsible for keeping these documents on the building site at all times and making them available for inspection and use by the inspector during such construction until final inspection has been made; failure to do so shall result in stoppage of work. The approved construction documents shall not be changed, modified or altered without authorization from the Building Official; all work shall be done in accordance with these documents.
One set of approved construction documents for all building permits shall be retained by the Department in reproducible form as public records.

106A.4.3 Validity of permit. The issuance of a permit or approval of plans and specifications shall not be construed to be a permit for, or an approval of, any violation of any of the provisions of this code or of any other applicable laws and regulations. Permits presuming to give authority to violate or cancel the provisions of this code or other ordinances of the jurisdiction shall not be valid.
The issuance of a permit based on plans, specifications and other data shall not prevent the Building Official from thereafter requiring the correction of errors in said plans, specifications and other data, or from preventing building operations being carried on thereunder when in violation of this code or other applicable laws and regulations.

106A.4.4 Permit expiration. Every permit issued by the Building Official under the provisions of this code, unless an extension of time has been specifically approved by the Building Official, shall expire by limitation and become null and void when the time allowed in Table B is reached, or when any of the following circumstances is applicable:

1. For Building Official-initiated code compliance permits, the work shall start within 30 days from the date of such permit.

2. If the building or work authorized is suspended or abandoned at any time after the work has started, for a period as follows:

2.1. Thirty days for Building Official- initiated code compliance permits.

2.2. One-hundred-eighty days for all other permits.

3. An extension of time from the stated periods may be permitted for good reason, provided such requests for an extension are submitted to the Building Official in writing prior to the end of the time period accompanied by payment of a fee. Unless approved by the Building Official, no more than one extension of time may be granted.

3.1. For all other permits, see Table B – Maximum Time Allowed to Complete All Work Authorized by Building Permit. The maximum time allowed for Building Official-initiated code compliance permits shall be 12 months for all permits exceeding $25,000 total valuation.

iv **4. A demolition permit shall expire 180 days after issuance. Only one extension of time of 180 days shall be granted upon written request to the Building Official, accompanied by payment of a fee. If there is a permit for a replacement structure, the demolition permit shall expire concurrently with the permit for that replacement structure.**

5. The Building Official may administratively authorize the processing of applications involving compliance actions initiated by the Department, in a manner other than set forth in this code, so as to effect said compliance most expeditiously; provided, however, that due process is assured all applicants. In this regard, the Building Official may reduce the time periods set forth in

this section as they apply to a second application and permit required by the Building Official to effect full compliance with this code and other applicable laws and regulations if by doing so code compliance would be more expeditiously accomplished.
EXCEPTION: In order to avoid repetitive filings and processing of applications to effect code compliance, the Building Official is hereby authorized to establish alternate procedures and extensions of time from cancellation pursuant to Section 106A.4.1 and from expiration pursuant to this section; provided, however, that the Building Official, in establishing alternate procedures and extension of time, shall proceed as expeditiously as possible toward abatement of the violations. When a permit is issued but delayed due to actions before the Board of Appeals or other City agencies, or cases in any court of competent jurisdiction, or is under review by a State or regional regulatory body, the time allowable shall be computed from the date of the final action of the agency or court of jurisdiction.

TABLE B – MAXIMUM TIME ALLOWED TO COMPLETE ALL WORK AUTHORIZED BY BUILDING PERMIT

Valuation	Time Allowed (1)	Extension Limitation
$1.00 to $100,000	360 days	360 days
$100,001 to $2,499,999	1,080 days	720 days
$2,500,000 and above	1,440 days	720 days

NOTES:

(1) For site permits with a valuation of $2,500,000 or more, the time allowed to complete work authorized by the building permit may be increased by 50 percent. For site permits with a valuation less than $2,500,000, use Table B.

106A.4.4.1 Commencement of work on permit expired due to work not started. Before work can be commenced on an expired permit on which no work was performed, a new application shall be filed and a new permit shall be obtained. If not more than one year has elapsed since the expiration of the original permit, the applicant is eligible for reduced fee on the new permit. See Section 110A-Table 1A-B — Commencement of Work Not Started. All other applicable fees in Section 110A - Table 1A-A or any other table in this code, shall be collected in the full amount. To qualify for the reduced fees, the original approved plans and specifications in the possession of the owner shall be submitted with the new application, together with a notarized certification that there are no changes made on those plans and specifications.
In the event a refund has been granted upon the request of the applicant prior to the commencement of the work, the provisions of this section shall not apply and a new permit shall be applied for and all fees will be required to be paid.

106A.4.4.2 Recommencement of work on permit expired due to work not completed. An alteration permit shall be secured for the work not completed. See Section 110A, Table 1A-F — Specialty Permit Fees — for applicable fee to defray cost of certifying site conditions. The permit fee shall be based upon the valuation of the uncompleted work. When the permit is for completing the work as shown on the original approved plans, no additional plan review fee shall be required.

106A.4.5 Suspension or revocation. The building official may, in writing, suspend or revoke a permit issued under the provisions of this code whenever the permit is issued in error or on the basis of incorrect information supplied, or in violation of any ordinance or regulation of any of the provisions of this code.
Any permit issued for which less than the correct permit and plan checking fees were paid shall be considered an invalid permit and shall be suspended until the complete bill of fees has been paid. Failure to pay the correct fees shall be sufficient grounds for denial of a temporary permit of occupancy or a permit of occupancy.

106A.4.6 Notice of permit issuance. Within 24 hours after the issuance of a building permit authorizing the types of work described below, notice of such issuance shall be given in the manner set forth below.

1. For permits to demolish or erect a building or structure, or to move a structure to a new site, the permittee shall obtain from the Department a sign containing the following information: permit number; filing date; address and phone number of the agency to contact for information regarding permit issuance; the date of permit issuance; address and phone of agency to contact to appeal issuance of permit; name, address and phone number of permittee.
For unreinforced masonry buildings, additional information shall be provided, as required by the Building Official.
See Section 110A, Table 1A-L – Public Information – for applicable fee.
The permittee shall cause the sign to be erected on the site of the property to which the application applies.
Location of sign. The sign shall be clearly visible to passing motorists and passing pedestrians. In the case of moved buildings, the sign shall be posted at the site onto which the building is to be moved. The minimum dimensions shall be 30 inches by 30 inches (762 mm × 762 mm), unless the permit relates to a vacant site or a vacant building, in which case the Building Official may require a sign up to 8 feet (2.438 m) wide and 4 feet (1.219 m) high upon a determination that the larger sign will provide better public notice. If a larger sign is required, the permittee shall provide it, and it shall contain the information set forth above. The sign required herein shall be installed as follows: The bottom edge of the sign shall be at least 6 feet (1.829 m) above grade; the face of the sign shall be parallel to the main street frontage and shall be located 5 feet (1.524 m) or less from the street property line; the sign shall be attached to one or more posts substantially embedded into the ground in order to withstand wind or other load factors, or may be attached to an existing front building wall. The background color of the sign shall be white, and the color of the text shall be black; the letter size of the first line shall be a minimum of 8 inches (203.2 mm) high; the size and style of the text shall be such that the message is clear and legible from a distance of 10 feet (3.048 m) to a viewer with normal vision.
Duration of sign posting. The permittee shall cause the sign to be erected within 24 hours after a permit is issued. The sign shall remain posted until either the conclusion of the hearing on the permit before the Board of Appeals or the time for filing such appeal has lapsed without an appeal being filed. Work under a demolition permit shall not begin until 15 days after the date on which the permit is issued.
Revocation for noncompliance. The Building Official shall, after providing the permittee an opportunity to respond to any complaint of noncompliance, revoke any permit where the applicant

has not substantially complied with the provisions of this section or Section 106A.3.2.3 requiring notice of permit application and issuance.
The requirements contained in this code relating to notice are not intended to give any right to any person to challenge in any administrative or judicial proceeding any action for which notice is given if such person would not otherwise have the legal right to do so.

2. For a permit which would authorize a structural addition to an existing building, the Department shall mail written notice to the owners of properties immediately adjacent to the subject building as shown on the current tax roll. See Section 110A, Table 1A-L – Public Information – for applicable fee.

3. For a permit which would authorize the demolition or moving of a building or structure, written notice shall be mailed to the owners of properties within 300 feet (91.44 m) in every direction from the edge of the property on which the proposed demolition work will take place, or from which the building will be moved. Owners notified shall be as shown on the last annual tax roll. Notice to interested organizations or groups shall be made as provided in Section 106A.4 of this code.

4. For changes in occupancy per this code, notice shall be provided as specified in Section 6 of the San Francisco Business and Tax Regulations Code. See Section 110A, Table 1A-L – Public Information – for applicable fee.

5. For a permit that would authorize removal of a legal or illegal dwelling unit, as defined in the Housing Code, permittee shall post a sign at least 15 inches by 15 inches (381 mm x 381 mm) in a conspicuous common area of the building where the work will occur, with the following information: permit number; filing date; address and phone number of the agency to contact for information regarding permit issuance; the date of permit issuance; address and phone number of agency to contact to appeal issuance of permit; name, address and phone number of permittee. The sign shall also contain a list of tenant counseling or legal services that can provide assistance to tenants with understanding and participating in the City's processes. The sign shall remain posted until either the conclusion of the hearing on the permit before the Board of Appeals or the time for filing such appeal has lapsed without an appeal being filed. Such notice shall also include contact information for translation services into Spanish, Chinese, and Russian.

Revocation for noncompliance. The Building Official shall, after providing the permittee an opportunity to respond to any complaint of noncompliance, revoke any permit where the applicant has not substantially complied with the provisions of this section or Section 106A.3.2.3 requiring notice of permit application and issuance.

106A.4.7 Additional work, permit required. When an approved permit has been issued, a separate permit for alteration work shall be required for any change in work or additional work as set forth hereafter. The fees for such additional work shall be as set forth in Section 110A, fee tables, based on the difference in the valuation between the changed work and that of the original permit. The valuation shall be not less than $1. Situations which require a separate permit include the following:

1. Construction differing from the approved construction documents sufficiently to require revised plans or additional plans to be submitted to the Department for approval, including changes in partition layout that impact other code requirements, changes in framing directions, spans, and locations of concentrated loads, and changes in types of materials used. See Section 110A, Table 1A-F – Specialty Permit Fees – for the assessment for this type of additional work.

2. Changes proposed to any building or structure which alter the exterior dimensions more than 6 inches (152.4 mm) either in vertical or horizontal dimension, alter the visual appearance through changes in exterior wall materials or windows, change the number of residential dwelling units or decrease the amount of off-street parking provided.

3. Value of additional work or of changes exceeding 10 percent of the valuation of the approved permit work or $50,000 whichever is the lesser amount.

4. A change in occupancy or use, as defined in this code.

5. A change in the construction type of any portion of the building.

6. An unusual condition requiring a permit procedure to protect the interest of the public.

A separate alteration permit shall not be required where the change or additional work is required by the Board of Appeals as a condition of approving an appealed permit; however, revised plans and plan review fees, including back check fees, shall be required for any such change or additional work. The Board of Appeals may require, as a condition of approval, that revised plans be submitted to the Board for review.

106A.4.8 Replacement of approved construction documents. When the permit holder's set of approved construction documents is not available as required by Section 106A.4.2, a duplicate set of documents shall be submitted to the Department along with a notarized certification that such documents are identical to the approved construction documents except for notations by City agencies. The Department shall then copy such notations from its retained set to the duplicate set and shall stamp the duplicate set APPROVED.
See Section 110A, Table 1A-L – Public Information – for applicable fee.

106A.4.9 Preapplication plan review or inspection. When a party wishes to discuss specific design issues or submit preliminary designs for review and comment by the Department prior to formal application for a permit, a request for preapplication plan review must be submitted in writing to the Building Official. See Section 110A, Table 1A-B – Other Building Permit and Plan Review Fees – for applicable fees. Payment of the minimum fee must be submitted with the letter of request. In cases where on-site discussion with a field inspector is desired, the same request requirements apply. See Section 110A, Table 1A-G – Inspections, Surveys and Reports – for applicable fee.

106A.4.10 Review of mechanical plans. When an application for a permit contains a mechanical component (separate from or in addition to energy conservation design) sufficient in scope or complexity to require review by a mechanical specialist, a fee for this service shall be assessed and is payable before issuance of the permit. See Section 110A, Table 1A-B – Other Building Permit and Plan Review Fees – for applicable fee.

106A.4.11 Review of electrical plans. When an application for a permit contains an electrical component (separate from or in addition to energy conservation design) sufficient in scope or complexity to require review by an electrical specialist, a fee for this service shall be assessed and is payable before issuance of the permit. See Section 110A, Table 1A-B – Other Building Permit and Plan Review Fees – for applicable fee.

106A.4.12 Review of plumbing plans. When an application for a permit contains a plumbing component sufficient in scope or complexity to require review by a plumbing plan reviewer, a fee for this service shall be assessed and is payable before issuance of the permit. See Section 110A, Table 1A-B – Other Building Permit and Plan Review Fees – for applicable fee.

106A.4.13 Premium plan review. At the request of the applicant and upon payment of an additional fee per Table 1A-B – Other Building Permit Application and Plan Review Fees, building permit applications shall be reviewed by the Department of Building Inspection within a guaranteed plan review time set by the Building Official. This building plan review time will be less than normal turnaround times and will be developed on a case-by-case basis depending on the

scope of work and the quality of completeness of the submittal documents. At or before the due date of the guaranteed building plan review time, a thorough set of plan review comments and/or corrections will be sent to the applicant for response. Premium Plan Review does not guarantee plan review times during the recheck process, nor building permit approval and issuance. If the Department fails to complete its plan review within the guaranteed plan review time, the additional fee paid shall be refunded to the applicant upon written request by the applicant. This service is offered for plan review by the Department of Building Inspection only and does not commit any other City agencies or departments to the turnaround times.

(Amended by Ord. 43-14 , File No. 131148, App. 4/17/2014, Eff. 5/17/2014; Ord. 208-15 , File No. 150587, App. 12/9/2015, Eff. 1/8/2016)

SECTION 107A – FEES

107A.1 General. Fees shall be assessed in accordance with the provisions of this section or shall be as set forth in the fee schedule adopted by the jurisdiction.

107A.1.2 Exemption from fees. The fees provided for in this chapter shall not apply to permits issued to perform work on buildings which are owned and occupied by the Federal or State governments. The San Francisco Housing Authority shall be exempt from all permit fees in this chapter except State mandated fees and record retention fees. Permits required under this code for buildings and sites owned or leased by the City and County of San Francisco shall be subject to all fees set forth in this chapter.

107A.2 Permit issuance fees. The minimum permit fee per Section 110A, Table 1A-A – Building Permit Fees – shall be paid at the time an application for a building permit is issued. The New Construction Permit Fee Schedule applies to new buildings or structures. The Alteration Permit Fee Schedule applies to alterations, repairs, additions or other work on an existing building or structure, or to the modification of the scope of an approved permit as required by Section 106A.4.7.
The determination of value or valuation under any of the provisions of this code shall be made by the Building Official. The value to be used in computing the permit issuance and plan review fees shall be the final valuation upon completion of all construction work for which the permit is issued, as well as all finish work, painting, roofing, mechanical, electrical, plumbing, heating, air conditioning, elevators, fire-extinguishing systems and all other permanently installed equipment and construction, even though other permits to perform such work may be required.
The valuation shall be calculated at the time of permit issuance according to a cost schedule posted in the office of the Department or by actual construction cost, whichever is greater. The valuation shall be recalculated at the time of any addenda and/or revision issuance. Any additional fees due resulting from the recalculation of valuation shall be paid prior to addenda and/or revision issuance. The cost schedule shall be adjusted annually based on construction cost data reported by a variety of sources, including without limitation, local contractors, design professionals, cost estimators or nationally published construction cost data books or websites. Contractor overhead and profit shall be reflected in the schedule. The Building Inspection Commission is authorized to waive the annual cost schedule adjustment if it determines that increasing the fees will exceed the cost of providing the services for which the fees are paid.

107A.3 Plan review fees.

(a) When submittal documents are required by Section 106A.3.2, a plan review fee shall be paid at the time of filing an application for a permit for which plans are required pursuant to Section 106A.3.2. Said plan review fee shall be based on the valuation determined by Section 107A.1. See Section 110A, Table 1A-A – Building Permit Fees – for applicable fee.
The plan review fees specified in this section are separate fees from the permit issuance fees specified in Section 107A.2 and are in addition to the permit fees.
When submittal documents are incomplete or changed so as to require additional plan review or when the project involves deferred submittal items as defined in Section 106A.3.4.2, an additional plan review fee shall be charged as shown in Section 110A, Table 1A-B – Other Building Permit and Plan Review Fees.

(b) If a project involves voluntary seismic retrofit upgrades to soft-story, wood-frame buildings, as defined by the Building Official, the applicant for said project shall be exempt from the proportionate share of plan review fees specified under this Chapter that is related to such retrofit work, provided all permit conditions and timelines are met.

107A.3.1 Reduced plan review fee. A reduced plan review fee shall be collected for reviewing submittal documents identical to those filed within one year of the original approved construction documents for which the full plan review fee was paid. For this purpose, plans may be considered identical when they contain only such minor differences as exterior finishes, or if they are identical but opposite hand. See Section 110A, Table 1A-B – Other Building Permit and Plan Review Fees – for the second and each subsequent set of identical submittal documents within the stated time period. To obtain this reduction, the applicant shall submit a copy of the original approved construction documents for which the full plan review fee was paid.
When the submittal documents are substantially changed from those that were previously approved, an additional full plan review fee shall be charged. See Section 110A, Table 1A-B – Other Building Permit and Plan Review Fees – for applicable fee.

107A.3.2 Tenant improvement work. An application for tenant improvement work shall state at the time of filing whether the permit is to include the partition and other improvement work for the entire building. If this work is not to be included, the valuation shall be reduced accordingly. The installation of such work shall then require permits for alteration work, the fees for which shall be in accordance with Section 110A, Table 1A-A – Building Permit Fees.

107A.3.3 Improvement work. When the application is for first-time improvement work in a new building and the valuation of such work was included in the valuation of the original building permit, the valuation for each alteration permit for part or all of such work shall be shown as $500, and the permit fee shall be collected accordingly.

107A.3.4 Site permit and addenda fees. The permit fee for projects submitted under the site permit and addenda process shall be based on Section 110A, Table 1A-A – Building Permit Fees and additional fees as stated in Table 1A-B – Other Building Permit and Plan Review Fees. Twenty-five percent of the plan review fee shall be paid at the time of site permit application submittal, and shall be credited toward the final plan review fee payment at the time of the first construction addendum submittal as determined by the Building Official. One hundred percent of the permit issuance fee shall be paid at the time of the first construction addendum issuance as determined by the Building Official.

107A.4 Expiration of plan review. (See Section 106A.3.7.)

107A.5 Investigation Fees: Work Without a Permit. Whenever any work, for which a permit is required under the provisions of this code, has been started without a permit and where no specific

additional fees are imposed as penalties as provided in this chapter, a special investigation shall be made before a permit may be issued for such work. See Section 110A, Table 1A-K – Penalties, Hearings, Code Enforcement Assessments – for applicable fee. Where only a portion of the work has been commenced without a permit, the investigation fee shall be based upon the portion of the work done without a permit. The cost of any penalty for any work done, in conjunction with the investigation fee, shall be borne by the owner.

The owner or owner's agent may appeal the amount of the investigation fee if they can provide just cause, such as unfamiliarity with this code or demonstrable negligence on the part of one of their employees.

The Building Official may reduce the investigation fee to two times the amount of the permit fee as called for in Section 110A, Table 1A-A – Building Permit Fees – of this code for work that was constructed prior to the current building ownership, provided that substantiating documentation is provided.

Where the Building Official rules against the applicant, appeals of such investigation fee shall be filed with the Board of Appeals in the manner provided in Part III of the San Francisco Municipal Code. Such filing shall be subject to the fees and rules of the Board of Appeals. The Board of Appeals, in re-viewing the appeal of the investigation fee assessed for doing work without a permit, may reduce the amount of said fee, but in no case shall such reduced investigation fee be less than two times the amount of the permit fee as called for in Section 110A, Table 1A-A – Building Permit Fees – of this code.

107A.6 Fee refunds. When no work has been done and the project has been abandoned or the permit expired per Section 106A.4.4, by limitation, a portion of the building issuance fee paid shall be refunded upon written request of the owner when such request is made within six months of permit expiration. See Section 110A, Table 1A-R – Refunds – for applicable refund.

107A.6.1 Plan review fees. When an application is withdrawn, the plan review fee paid may be partially refunded upon written request in the case no site inspection had been made by Department personnel, and plan review had not started within any division of the Department. See Section 110A, Table 1A-R – Refunds – for applicable refund. For other cases, the amount of refund, if any, shall be determined by the Building Official, based on the amount of permit processing work already completed on the application at the time it was withdrawn. Requests for refunds must be made within 30 days of withdrawal by the applicant to the Building Official.

107A.6.2 Fees in error. If the Building Official determines that an error has been made in the assessment of fees, a refund for the portion determined to be in error may be made upon written request by the applicant. See Section 110A, Table 1A-R – Refunds – for applicable refund.

107A.7 Strong Motion Instrumentation Program fee. Pursuant to the provisions of Section 2705 of the Public Resources Code of the State of California, a fee shall be assessed for all building permits except demolitions. See Section 110A, Table 1A-F – Specialty Permit Fees – for applicable fee. All such fees collected shall be handled in accordance with the provisions of Section 2706 of said Public Resources Code.

107A.7.1 Strong Motion Revolving Fund. That portion of the strong motion instrumentation fee retained by the Department as provided for in Section 2705 of the Public Resources Code of the State of California shall be deposited into a special Strong Motion Revolving Fund established by the City Controller. Funds from this revolving fund shall be used, subject to the approval of the

Building Official and the Building Inspection Commission, to defray personnel and equipment costs incurred in carrying out the State mandate. The Strong Motion Revolving Fund shall continue from year to year, and shall not be included in the Cash Reserve Fund.

107A.7.2 California Building Standards Commission administration fee. Pursuant to the provisions of California Health and Safety Code Sections 18930.5, 18931.6, 18931.7 and 18938.39 relating to building materials, cities and counties are required to assess a fee for all building permits. See Section 110A, Table 1A-J for applicable fee. All such fees shall be handled in accordance with the provisions of Section 18931.7 of said Health and Safety Code.

107A.7.2A California Building Standards Commission Fund. That portion of the fee assessed pursuant to Section 107A.7.2 relating to building materials that is retained by the Department of Building Inspection shall be deposited into the California Building Standards Commission Fund established by the City Controller. Funds from this category 2 fund shall be used, subject to the approval of the Building Official and the Building Inspection Commission, for administrative costs and code enforcement education, including but not limited to, certification in the voluntary construction inspector certification program. The California Building Standards Commission Fund shall continue from year to year and shall not be included in the Cash Reserve Fund.

107A.7.3 Technology surcharge on permits. A technology surcharge is hereby established on the cost of permit applications that the Department of Building Inspection processes for all departments and bureaus of the City and County of San Francisco. The surcharge proceeds are to be used solely for the implementation and maintenance of the City-wide Permit and Project Tracking System. The funds shall continue from year to year and shall not be included in the Cash Reserve Fund. See Section 110A, Table 1A-J for the applicable surcharge.

107A.8 Delinquent fees/dishonored checks. Permits will not be issued to any person having outstanding or delinquent balances or dishonored checks on file with the Department of Building Inspection.

107A.9 Survey. A building survey may be requested when a building inspector's assistance is desired to establish code compliance of existing or proposed construction. See Section 110A, Table 1A-G – Inspections, Surveys and Reports – for applicable fees.

107A.10 Building numbers and fees. Every person shall obtain an official street number assignment at the time the person files a permit application or establishes a new parcel and shall place the numbers so assigned on the building in such a position that the number is easily visible to approaching emergency vehicles. The numerals shall not be less than 4 inches (101.6 mm) in height with a minimum stroke width of 1/2 inch (12.7mm) [Reference CRC R319.1] and shall be a contrasting color to the background. All numbers must be made of substantial and permanent material and must be so affixed as not to be easily effaced or removed. Any additional or changed numbers assigned to a building shall be subject to the provisions of this section. See Section 110A, Table 1A-J – Miscellaneous Fees – for applicable fee.

107A.11 Fees for reproduction of reports, records and documents for the public.

107A.11.1 General. In order to provide for the cost of reproducing inspection reports, records, documents and other material in the Department files for the public, including but not limited to records on microfilm, a fee shall be required, payable in advance. Fees shall be chargeable to all persons, as well as City departments; when such reproduction is in response to subpoenas of

records, the attorney requesting such records shall pay the fees. All fees collected shall be deposited into the Building Inspection Fund.

107A.11.2 Reproduction fees. The fees shall be determined based upon the number of pages, type of record, size of microfilm reproduced and the number of copies required. All costs of reproduction shall require the pickup of said reproduced material at the office of the Department unless costs of delivery are provided. The Building Official may make any other rules or regulations necessary to provide for the reproduction of material consistent with the intent of this section. See Section 110A, Table 1A-L – Electrostatic Reproduction – for applicable fees.

107A.12 Fees for services and regulatory functions of the Department. Fees for all services and regulatory functions of the Department as established in various chapters of the San Francisco Municipal Code shall be imposed pursuant to Section 110A et seq.

107A.13 Development impact and in-lieu fees.

107A.13.1 Definitions. (a) The following definitions shall govern interpretation of this Section:

(1) "City" shall mean the City and County of San Francisco.

(2) "Department" shall mean the Department of Building Inspection.

(3) "Development fee" shall mean either a development impact fee or an in-lieu fee. It shall not include a fee for service or any time and material charges charged for reviewing or processing permit applications.

(4) "Development impact fee" shall mean a fee imposed on a development project as a condition of approval by the various departments and agencies of the City and levies against development projects by the San Francisco Unified School District under Section 17620 of the California Education Code and other provisions of State law to mitigate the impacts of increased demand for public services. facilities or housing caused by the development project that may or may not be an impact fee governed by the California Mitigation Fee Act (California Government Code Section 66000 et seq.)

(5) "Development impact requirement" shall mean a requirement to provide physical improvements, facilities or below market rate housing units imposed on a development project as a condition of approval to mitigate the impacts of increased demand for public services, facilities or housing caused by the development project that may or may not be governed by the California Mitigation Fee Act (California Government Code Section 66000 et seq.).

(6) "Development project" shall mean a project that is subject to a development impact or in-lieu fee or development impact requirement.

(7) "First certificate of occupancy" shall mean either a temporary certificate of occupancy or a Certificate of Final Completion and Occupancy as defined in San Francisco Building Code Section 109A, whichever is issued first.

(8) "First construction document" shall mean the first building permit issued for a development project or, in the case of a site permit, the first building permit addendum issued or other document that authorizes construction of the development project. Construction document shall not include permits or addenda for demolition, grading, shoring, pile driving, or site preparation work.

(9) "In-lieu fee" is a fee paid by the project sponsor in lieu of complying with a City requirement that is not a development impact fee within the meaning of the Mitigation Fee Act.

(10) "Neighborhood Infrastructure Seed Fund" shall mean the fund or funds established by the Controller's Office for the purpose of collecting the 20 percent pre-paid portion of the development fees intended to fund pre-development work on any neighborhood infrastructure project funded by any of the six neighborhood infrastructure impact development fees listed in Subsection 107A.13.13.1. In addition, third-party grant monies or loans may also be deposited into

this fund for the purpose of funding pre-development or capital expenses to accelerate the construction start times of any neighborhood infrastructure project funded by any of the six neighborhood infrastructure impact development fees listed in Subsection 107A.13.13.1.

(11) "Project sponsor" or "sponsor" shall mean an applicant seeking approval for construction of a development project subject to this Section, such applicant's successor and assigns, and/or any entity which controls or is under common control with such applicant.

(12) "Unit" shall mean the Department's Development Fee Collection Unit.

107A.13.2 Collection by Department. The Department shall be responsible for collecting all development impact and in-lieu fees, including (a) fees levied by the San Francisco Unified School District if the District authorizes collection by the Department, and (b) fees levied by the San Francisco Public Utilities Commission, if the Commission's General Manager authorizes collection by the Department, deferral of payment of any development fee, and/or resolution of any development fee dispute or appeal in accordance with this Section 107A.13.

107A.13.3 Timing of development fee payments and satisfaction of development impact requirements.

(a) All development impact or in-lieu fees owed for a development project shall be paid by the protect sponsor prior to issuance of the first construction document; provided, however, that the project sponsor may elect to defer payment of said fees under Section 107A.13.3.1.

(b) Any development impact requirement shall be completed prior to issuance of the first certificate of occupancy for the development project.

107A.13.3.1 Fee deferral program; development fee deferral surcharge. A project sponsor may elect to defer payment of any development impact or in-lieu fee collected by the Department to a due date prior to issuance by the Department of the first certificate of occupancy; provided, however, that the project sponsor shall pay 15 percent of the total amount of the development fees owed prior to issuance of the first construction document. If a project is subject to one of the six neighborhood infrastructure impact development fees listed in Subsection 107A.13.3.1.1, the project sponsor shall pay 20 percent of the total amount of the development fees owed prior to issuance of the first construction document. These pre-paid funds shall be deposited as provided in Subsection 107A.13.3.1. 1 below. A project sponsor that received project approval prior to July 1, 2010 and has not yet paid a development impact or in-lieu fee may elect to defer payment under the provisions of this Section notwithstanding a condition of approval that required the fee to be paid prior to issuance of a building or site permit.

This option to defer payment may be exercised by (1) submitting a deferral request to the Department on a form provided by the Department prior to issuance of the first construction document, and (2) agreeing to pay a Development Fee Deferral Surcharge. This deferral option shall not be available to a project sponsor who paid the fee prior to the operative date of July 1, 2010; the project sponsor's reapplication for a building or site permit after expiration of the original permit and refund of the development fees paid shall not authorize the project sponsor to elect the deferral option. The deferral option shall expire on July 1, 2013 unless the Board of Supervisors extends it.

107A.13.3.1.1. Deposit of pre-paid portion of deferred development fees. If a development project is not subject to one of the six neighborhood infrastructure impact fees listed below, the pre-paid portion of the development fees shall be deposited into the appropriate fee account. If there is more than one fee account, the pre-paid portion of the fees shall be apportioned equally.
If a development project is subject to one of the six neighborhood infrastructure impact development fees listed below, the entire 20 percent development fee pre-payment shall be deposited in the appropriate neighborhood infrastructure impact fee account. These pre-paid funds

shall be dedicated solely to replenishing the Neighborhood Infrastructure Seed Fund for that specific neighborhood infrastructure impact fee account. In no event shall a neighborhood infrastructure impact fee specific to one Area Plan be mixed with neighborhood infrastructure impact fees specific to a different Area Plan. If the 20 percent development fee pre-payment exceeds the total amount owed for the neighborhood infrastructure impact fee account, the remaining pre-paid portion of the 20 percent development fee pre-payment shall be apportioned equally among the remaining applicable development fees.
The neighborhood infrastructure development fees subject to the 20 percent pre-payment provision of this Subsection 107A.13.3.1.1 are as follows: (1) the Rincon Hill Community Infrastructure Impact Fee, as set forth in Planning Code Section 418.3(b)(1); (2) the Visitacion Valley Community Facilities and Infrastructure Fee, as set forth in Planning Code Section 420.3(b); (3) the Market and Octavia Community Infrastructure Fee, as set forth in Planning Code Section 421.3(b); (4) the Balboa Park Community iInfrastructure Impact Fee, as set forth in Planning Code Section 422.3(b); (5) the Eastern Neighborhoods Infrastructure Impact Fee, as set forth in Planning Code Section 423.3(b); and (6) the Van Ness and Market Neighborhood Infrastructure Impact Fee, as set forth in Planning Code Section 424.3(b)(ii).

107A.13.3.2 Payment of development fees; payment and calculation of Development Fee Deferral Surcharge. Except for any pre-paid fees, all deferred development fees remaining unpaid shall be paid in full prior to issuance of the first certificate of occupancy at the end of the deferral period. The Development Fee Deferral Surcharge shall be paid when the deferred fees are paid and shall accrue at the Development Fee Deferral Surcharge Rate.
The Development Fee Deferral Surcharge Rate shall be calculated monthly by the Unit as a blended interest rate comprised of 50% of the Treasurer's yield on a standard two-year investment and 50% of the latest updated Monthly Earned Income Yield Rate for the City and County of San Francisco's Pooled Funds, as posted on the San Francisco Treasurer's website and 50% of the Annual Infrastructure Construction Cost Inflation Estimate published by the Office of the City Administrator's Capital Planning Group and approved by the City's Capital Planning Committee consistent with its obligations under Section 409(b) of the San Francisco Planning Code. The annual Infrastructure Construction Cost Inflation Estimate shall be updated by the Office of the City Administrator's Capital Planning Group on an annual basis, in consultation with the Capital Planning Committee, with the goal of establishing a reasonable estimate of construction cost inflation for the next calendar year for a mix of public infrastructure and facilities in San Francisco. The Capital Planning Group may rely on past construction cost inflation data, market trends, and a variety of national, state and local commercial and institutional construction cost inflation indices in developing their annual estimates for San Francisco. Commencing on the effective date of this ordinance, the Unit shall publish the Development Fee Deferral Surcharge on the Department of Building Inspection website at or near the beginning of each month. The accrual of any deferred development fees begins on the first day that a project sponsor elects to defer development fees, but never later than immediately after issuance of the first construction document. The Development Fee Collection Unit shall calculate the final Development Fee Deferral Surcharge for individual projects by multiplying the total development fees otherwise due prior to issuance of the construction document by the Development Fee Deferral Surcharge Rate by the actual day count of the entire Development Fee Deferral Period, which shall be the number of days between the project sponsor's election to defer to final payment of the deferred development fees. The Development Fee Deferral Surcharge shall be apportioned among all development fee funds according to the ratio of each development fee as a percentage of the total development fees owed on the specific project.

107A.13.4 Development Fee Collection Unit. There shall be a Development Fee Collection Unit established within the Department. The Unit's duties include: (1) receiving and organizing

information from various City agencies concerning the amount of development fees owed or specific development impact requirements imposed under various sections of the San Francisco Municipal Code or other legal authority, (2) working with the project sponsor and relevant agencies to resolve any disputes or questions concerning the development fees or development impact requirements applied to specific development projects, (3) ensuring that the first construction document, or first certificate of occupancy if the project sponsor elects to defer payment, is not issued prior to payment of all development fees that are due and owing, (4) confirming with the Planning Department that any outstanding development impact requirements are satisfied prior to issuance of the first certificate of occupancy for projects subject to such requirements, (5) generating Project Development Fee Reports, (6) processing any development fee refunds, (7) publishing and updating the Citywide Development Fee Register, (8) initiating lien proceedings to collect any unpaid development impact or in-lieu fees, and (9) performing such other duties as the Building Official requires. The fee for the Department's services shall be as provided in Section 107A.13.14.

107A.13.5 Citywide Development Fee Register. The Unit shall publish a Citywide Development Fee Register that lists all current San Francisco development impact and in-lieu fees. The Unit shall update the Register whenever a development impact or in-lieu fee is newly enacted, rescinded or amended. The Unit shall make the Register available to the public upon request, including but not limited to posting it on the Department's website.

107A.13.6 Required City Agency or Department Notice to Development Fee Collection Unit. Prior to issuance of any building or site permit for a project, any department or agency responsible for calculating a development fee collected by the Unit or imposing a development impact requirement shall send written or electronic notification to the Development Fee Collection Unit that (i) identifies the development project, (ii) lists which specific development fees and/or development impact requirements are applicable and the legal authorization for their application. (iii) specifies the amount of the development fee or fees that the department or agency calculates is owed to the City or that the project sponsor has elected to satisfy a development impact requirement through the direct provision of public benefits, and (iv) lists the name and contact information for the staff person at each agency or department responsible for calculating the development fee or monitoring the development impact requirement.

107A.13.7 Project Development Fee Report. Prior to the issuance of the building or site permit for a development project that owes a development fee or fees or is subject to development impact requirements, and at any time thereafter, the Development Fee Collection Unit shall prepare and provide to the project sponsor, or any member of the public upon request, a Project Development Fee Report. The Report shall: (i) identify the development project, (ii) list which specific development fees and/or development impact requirements are applicable and the legal authorization for their application, (iii) specify the amount of the development fee or fees that the department or agency calculates is owed or that the project sponsor has elected to satisfy a development impact requirement through the direct provision of physical improvements, (iv) list the name and contact information for the staff person at each agency or department responsible for calculating the development fee or monitoring the development impact requirement, and (v) state whether the development fee or fees are due and payable prior to issuance of the first construction document or whether the project sponsor has requested deferral under Section 107A.13.3.1, and note the status of payment. A copy of the Project Development Fee Report shall always be made available to the project sponsor immediately prior to issuance of the site or building permit for a development project subject to any development fee or fees to provide adequate notice of the proposed development fee or fees. The Development Fee Collection Unit shall not issue a Final Development Fee Report and the respective site or building permit for a development project until

it has received written confirmation from the First Source Hiring Administration (FHSA) that the project sponsor has executed a first source hiring agreement(s) with the FHSA consistent with Administrative Code Section 83.11.

107A.13.8 Failure to give notice of a development fee owed or development impact requirement. The failure of the Unit or a fee-assessing department or agency to give any notice of a development fee owed or development impact requirement shall not relieve the project sponsor of the obligation to pay the development fee when it is due. The procedure set forth in this Section is not intended to preclude enforcement of the development fee or development impact requirements pursuant to any other section of this Code, the Planning Code or other parts of the Municipal Code or under the laws of the State of California.

107A.13.9 Development fee dispute resolution; appeal to Board of Appeals.

107A.13.9.1 Procedure for resolution by Development Fee Collection Unit. If a dispute or question arises concerning the accuracy of the final Project Development Fee Report, including the mathematical calculation of any development fee listed thereon, the Development Fee Collection Unit shall attempt to resolve it in consultation with the department or agency affected by the disputed fee and the project sponsor. A person protesting the accuracy of the Report must submit the issue or issues in writing to the Unit with a copy to the department or agency whose development fee is in dispute. Any public notice of the issuance of the building or site permit shall notify the public of the right to request a copy of the Project Development Fee Report and of/he right of appeal to the Board of Appeals under Section 107A.13.9.2.

107A.13.9.2 Appeal to Board of Appeals.

(a) If the Development Fee Collection Unit is unable to resolve the dispute or question, the project sponsor or a member of the public may appeal the Project Development Fee Report to the Board of Appeals within 15 days of the issuance of the building or site permit under Article 8 et seq. of the San Francisco Business & Tax Regulations Code.

(b) In cases where a project sponsor is not using the site permit process and is required to pay a development fee or fees prior to issuance of the development project's building permit, and chooses not to defer payment under Section 107A.13.3.1, the sponsor may pay a disputed fee under protest and file an appeal within 15 days of the issuance of the permit.

(c) In order to appeal to the Board of Appeals under this Section, a project sponsor appellant must first have attempted to resolve the dispute or question by following the procedure in Section 107A.13.9.1. Evidence of this prior attempt must be submitted to the Board of Appeals in order for the Board to accept the appeal. Members of the public may file an appeal under this Section without providing such evidence.

(d) Promptly after an appeal has been filed, the Board of Appeals shall notify the department or agency whose development fee or development impact requirement is at issue of the fact that an appeal has been filed and the date scheduled for hearing. A representative of the Department of Building Inspection and of the department or agency whose development fee or development impact requirement is in dispute must be present at the appeal hearing.

(e) In hearing any appeal of the Project Development Fee Report, the Board's jurisdiction is strictly limited to determining whether the mathematical calculation of the development fee or the scope of a development impact requirement is accurate and resolving any technical disputes over the use, occupancy, floor area, unit count and mix, or other objective criteria that calculation of the challenged development fee or development impact requirement is based upon.

(f) If a decision by the Board of Appeals requires a refund of all or any portion of the disputed development fee, the refund shall be processed promptly by the Development Fee

Collection Unit under Section 107A.13.11. If a decision requires a new determination regarding the scope of a development impact requirement, such new determination shall be made by the relevant City agency or department prior to issuance of the first certificate of occupancy. Where the Board determines that an additional amount of the fee or fees is due and owing, the additional amount shall be paid prior to issuance of the first certificate of occupancy for the development project.

107A.13.10 Violation of this section deemed a violation of the Building Code. In addition to the lien proceedings authorized Section 107A.13.15, a violation of this Section 107A.13 shall be deemed a violation of the Building Code and subject to the provisions of Section 103A and any investigation or other fees authorized under other sections of this Code to compensate the Department for the cost of abating violations.

107A.13.11 Development fee refunds. Upon notification by the property owner or project sponsor and confirmation by the applicable department or agency that a fee refund is due, the Unit shall process the refund. The fee for processing the refund shall be as set forth in Table 1A-D – Other Building Permit and Plan Review Fees.

107A.13.12 Development fee information a public record. Any notice of development fees due or development impact requirements imposed sent to the Development Collection Unit by any fee-assessing departments and agencies, the Project Development Fee Report issued by the Unit, and any development fee refunds or development impact requirement revisions made are a matter of public record.

107A.13.13 Administrative fee. The fee for services provided by the Department under this Section 107A.13 shall be the Standard Hourly Rate for Administration set forth in Table 1A-D of this Code. The administrative fee is payable within 30 days of the Department's notice that payment is due.

107A.13.14 Administrative procedures. The Building Official is empowered to adopt such administrative procedures as he or she deems necessary to implement this Section. Such administrative procedures shall be generally consistent with the procedural requirements set forth in this Section 107A.

107A.13.15 Wrongful issuance of first construction document or certificate of occupancy; assessment lien; notice. In addition to any other remedy established in this Code or under other authority under the laws of the State of California, if DBI inadvertently or mistakenly issues the first construction document or first certificate of occupancy, whichever applies, for a development project that has not paid a development fee that is due and owing and payment has not been received within 30 days following notice that payment is due, or, in the case where a sponsor has elected to satisfy a development impact requirement through direct provision of physical improvements and where non- compliance with any such requirement is not corrected within 30 days following notice, the Department shall initiate proceedings in accordance with Article XX of Chapter 10 of the San Francisco Administrative Code to make the entire unpaid balance of the fee that is due, including interest at the rate of one and one-half percent per month or fraction thereof on the amount of unpaid fee, a lien against all parcels used for the development project. The penalty fee provisions of this section shall also apply to projects that have elected to provide physical improvements in lieu of paying a development fee, as if they had elected to pay the relevant development fee.
The Department shall send all notices required by Article XX to the owner or owners of the property and to the project sponsor if different from the owner. The Department shall also prepare a preliminary report, and notify the owner and sponsor of a hearing by the Board of Supervisors to confirm such report at least ten days before the date of the hearing. The report shall contain the

owner and sponsor's names, a description of the development project, a description of the parcels of real property to be encumbered as set forth in the Assessor's Map Books for the current year, a description of the alleged violation of this Section, and shall fix a time, date, and place for hearing. The Department shall mail this report to the sponsor and each owner of record of the parcels of real property subject to the lien.

Any notice required to be given to an owner or sponsor shall be sufficiently given or served upon the owner or sponsor for all purposes in this Section if personally served upon the owner or sponsor or if deposited, postage prepaid, in post office letterbox addressed to the owner or sponsor at the official address of the owner or sponsor maintained by the Tax Collector for the mailing of tax bills or, if no such address is available, to the sponsor at the address of the development project, and to the applicant for the site or building permit at the address on the permit application.

Except for the release of the lien recording fee authorized by Administrative Code Section 10.237, all sums collected by the Tax Collector under this Section shall be held in trust by the Treasurer and deposited in the City's appropriate fee account.

(Amended by 54-15, File No. 150150, App. 4/30/2015, Eff. 5/30/2015)

SECTION 108A – INSPECTIONS

108A.1 General. All construction or work for which a permit is required shall be subject to inspection by the building official, and all such construction or work shall remain accessible and exposed for inspection purposes until approved by the building official. In addition, certain types of construction shall have continuous inspection by special inspectors as specified in Section 1701. Approval as a result of an inspection shall not be construed to be an approval of a violation of the provisions of this code or of other ordinances of the jurisdiction. Inspections presuming to give authority to violate or cancel the provisions of this code or of other ordinances of the jurisdiction shall not be valid.

It shall be the duty of the permit applicant to cause the work to remain accessible and exposed for inspection purposes. Neither the building official nor the jurisdiction shall be liable for expense entailed in the removal or replacement of any material required to allow inspection.

In the absence of evidence as to the proper location of the lot on which a building is to be erected, for which a building permit has been or may be issued, the Building Official may require the owner to have the lot surveyed and staked by a registered land surveyor, or registered civil engineer, so that the proper location of the building on the lot may be determined. A copy of this survey shall be filed with the application for the permit.

108A.2 Inspection record card. Any work requiring a permit shall not begin until the permit holder or the permit holder's agent posts an inspection record "Job Card," on the site. This card shall be issued at the time of permit issuance by the Department. The card must be posted in a conspicuous, readily accessible location to allow inspectors to make necessary entries; it must remain on the job site until a final inspection of all work stated in that permit has been completed. After final inspection, the card may be removed and retained as part of the building owner's record.

108A.3 Inspection requests. It shall be the duty of the person doing the work authorized by a permit to notify the building official that such work is ready for inspection. The building official may require that every request for inspection be filed at least one working day before such inspection is desired. Such request may be in writing or by telephone at the option of the building official.

It shall be the duty of the person requesting any inspections required by this code to provide access to and means for inspections of such work.

108A.3.1 Off-hour inspections. Those desiring inspections outside normal business hours (7:30 a.m. to 4:00 p.m., Monday through Friday, excluding legal holidays) may avail themselves of this service by prior arrangement and prepayment. See Section 110A, Table 1A-G – Inspections, Surveys and Reports – for applicable fee.

108A.3.2 Permits by other departments. Those applying for permits issued by other City departments which require an inspection, certification or report by the Department as a condition of issuance of said permits shall apply to the Department for said inspection, certification or report and pay a fee at the Department of Building Inspection. See Section 110A, Table 1A-G – Inspections, Surveys and Reports – for applicable fee.

108A.4 Approval required. No work shall be done on any part of the building or structure beyond the point indicated in each successive inspection without first obtaining the approval of the Building Official. Such approval shall be given only after an inspection shall have been made of each successive step in the construction as indicated by each of the inspections required in Section 108A.5. Any portions which do not comply with the provisions of this code and with the approved construction documents shall be corrected, and no such portion shall be covered or concealed until approved.

108A.5. Required inspections.

108A.5.1 General. The structural framework of any part of any building or structure shall not be covered or concealed without first obtaining the approval of the building official.
Protection of joints and penetrations in fire-resistive assemblies shall not be concealed from view until inspected and approved.

108A.5.2 Foundation inspection. Inspection shall be made after excavations for footings is complete and any required reinforcing steel is in place. For concrete foundations, any required forms shall be in place prior to inspection. All materials for the foundation shall be on the job site; however, where concrete is ready mixed in accordance with approved nationally recognized standards, the concrete need not be on the job site. Where the foundation is to be constructed of approved treated wood, additional inspections may be required by the building official.

108A.5.3 Concrete slab or under-floor inspection. Inspection shall be made after all in-slab or under- floor reinforcing steel building service equipment, conduit, piping accessories and other ancillary equipment items are installed, before any concrete is placed or floor sheathing installed, including the subfloor.

108A.5.4 Reinforcing steel. Inspection shall be made when reinforcing steel is in place in walls, floor and roof framing and other concrete members, and before any concrete is poured or placed. All reinforcing steel shall be visible for inspection.

108A.5.5 Structural steel. Inspection shall be made when structural steel framework, or any structural steel member of a building, is in place and before being covered or concealed in any manner.

108A.5.6 Frame inspection. Inspection shall be made after the roof, roof deck or sheathing, all framing, fire blocking and bracing are in place and all conduits, plumbing pipes, chimneys and vents to be concealed are complete and the rough electrical, plumbing, and heating wires, conduits, plumbing pipes and ducts are approved.

108A.5.7 Lath or gypsum board inspection. Inspection shall be made after all lathing and gypsum board, interior and exterior, are in place, but before any plastering is applied or before gypsum board joints and fasteners are taped and finished.

108A.5.8 Fire-rated suspended ceilings. Inspection shall be made after the installation of the hangers, lighting fixtures and air diffusers, the protective fixture boxes and main suspended ceiling members and before the ceiling is installed.

108A.5.9 Final inspection. A final inspection shall be made when the construction work has been completed, and the structure is ready for occupancy, but before it is occupied. There shall be a final inspection and approval on all buildings and structures when completed and ready for occupancy or use after plumbing, electrical and special inspection, and any other applicable approvals have been obtained. See Section 109A for certificate of occupancy requirements.

An exclusive electrical or plumbing final approval shall not be given or posted unless it is ascertained by the Building Official that no building permit is required.

108A.6 Special inspections. For special inspections, see Chapter 17.

108A.7 Other inspections. In addition to the called inspections specified above, the building official may make or require other inspections of any construction work to ascertain compliance with the provisions of this code and other laws which are enforced by the code enforcement agency.

108A.7.1 Concealed work. Whenever any work for which called inspections are required is covered or concealed without inspection, or whenever work is performed and concealed without a permit, and in cases where it is necessary to determine if the building or parts thereof are considered unsafe due to any of the conditions as set forth in Section 102A, the Building Official may require that such work be exposed for examination. The work of exposing or recovering or reconstructing such portions of the building or structure shall not entail expense to the City and County of San Francisco or any of its officials or employees, but shall be at the expense of the owner.

108A.8 Reinspection. A reinspection fee shall be assessed for each inspection or reinspection made necessary by any of the following conditions:

1. **When such portion of work for which inspection is called is not complete.**
2. **When corrections called for are not made.**
3. **When the inspection record "Job Card" is not properly posted on the work site.**
4. **When the approved plans are not readily available to the inspector.**
5. **For failure to provide access on the date for which inspection is requested.**
6. **For deviating from plans requiring the approval of the Building Official.**

The first reinspection for failure to comply with requirements shall not be assessed a reinspection fee. All subsequent reinspections on a job for the same or subsequent errors or omissions shall be charged a reinspection fee.

Subsequent to inspector determination of reinspection fee requirements, no required or requested inspections shall be made nor shall the job be given a Certificate of Final Completion and Occupancy or final approval until the required fees are paid at the Central Permit Bureau. See Section 110A, Table 1A-G – Inspections, Surveys and Reports – for applicable fee.

SECTION 109A – CERTIFICATE OF OCCUPANCY; AMENDED CERTIFICATE OF OCCUPANCY FOR EXISTING BUILDING

109A.1 Use and occupancy. No building or structure shall be used or occupied, and no change in the existing occupancy classification of a building or structure or portion thereof shall be made until the building official has issued a certificate of final completion and occupancy or an amended certificate of final completion and occupancy therefor as provided herein, or otherwise has been approved for use by the Department of Building Inspection.
Issuance of a certificate of final completion and occupancy or an amended certificate of final completion and occupancy shall not be construed as an approval of a violation of the provisions of this code or of other ordinances of the jurisdiction. Certificates presuming to give authority to violate or cancel the provisions of this code or other ordinances of the jurisdiction shall not be valid. It shall be the duty of the Police Department, when called upon by the Building Official, to enforce this provision.

109A.2 Change in occupancy or use. Changes in the character or use of a building shall not be made except as specified in San Francisco Existing Building Code Section ~~3408~~ 407 of this code. A certificate of final completion and occupancy shall be required for changes in use or occupancy as set forth in San Francisco Existing Building Code Section ~~3408~~ 407, except for Group R-1 and R-2 Occupancies; Group R-1 and R-2 occupancies shall be subject to the requirements of Sections 109A.7 and 109A.8.

109A.3 Certificate issued. The Building Official shall issue certificates of final completion And Occupancy for buildings or structures erected or enlarged; for each change in occupancy classification in any building, structure or portion thereof; and for buildings or structures seismically upgraded in accordance with the provisions of this code. An Amended certificate of final completion and occupancy shall be issued for an existing building where there is an increase in the number of legal dwelling units resulting in a change of occupancy. The amended certificate of occupancy shall indicate the date the first certificate of occupancy and any subsequent certificates of occupancy for the building or structure were issued. If there is no original certificate of occupancy, the amended certificate of occupancy shall refer to the date of initial construction on file in the records of the Department. The provisions of this section shall not be available for use in RH-1 or RH-1(D) zoning districts, nor shall it apply to any residential dwelling that is inconsistent with existing law.
EXCEPTION: For Group R-1 and R-2 Occupancies, see Sections 109A.7 and 109A.8.

109A.4 Temporary certificate. Temporary certificates of occupancy may be issued if the Building Official finds that no substantial hazard will result from occupancy of any building, or portion thereof, before the same is completed and satisfactory evidence is submitted that the work could not have been completed prior to occupancy. The request for such temporary certificate shall be in writing, and no occupancy of the building shall be made until such certificate is issued. Such temporary certificate shall be valid for a period not to exceed 12 months, unless an extension of time is approved by the Building Official. See Section 110A, Table 1A-G – Inspections, Surveys and Reports – for applicable fee.

109A.5 Posting. No requirements.

109A.6 Revocation. The building official may, in writing, suspend or revoke a certificate of occupancy or an amended certificate of occupancy issued under the provisions of this code whenever the certificate is issued in error, or on the basis of incorrect information supplied, or when it is determined that the building or structure or portion thereof is in violation of any ordinance or regulation or any of the provisions of this code.

109A.7 Certificate or amended certificate of final completion and occupancy, Group R-1 and R-2 occupancy. Before the Department may issue a certificate of final completion and occupancy for a newly-erected building or structure, an amended certificate of final completion and occupancy for an existing building pursuant to Section 109A.3, or Apartment House / Hotel License, a written report of compliance with applicable codes, standards and regulations and any conditions of approval to the building, structure or property shall be obtained from those agencies having jurisdiction. An amended certificate of final completion and occupancy issued for changes to an existing building shall indicate the date the first certificate of occupancy and any subsequent certificates of occupancy for the building or structure were issued. If there is no original certificate of occupancy, the amended certificate of occupancy shall refer to the date of initial construction on file in the records of the Department.

Where any permit for the building, structure or property was appealed to the Board of Appeals and the Board imposed conditions on appeal, the Department may not issue a certificate of final completion and occupancy, an amended certificate of final completion and occupancy, or apartment house / hotel license until it determines that the conditions have been met. A copy of the certificate of final completion and occupancy or amended certificate of final completion and occupancy shall be forwarded to the Board of Appeals.

109A.8 Group R-1 and R-2 occupancy, apartment house /Hotel License. A license shall be required for every Group R-1 and R-2 occupancy structure. The license shall be obtained by paying the necessary fees as set forth in Section 110A, Table 1A-P – apartment house and hotel license fees.

The apartment house / hotel license is not transferable, and a new license must be applied for by the new owner within 30 days of change of ownership.

The apartment house / hotel license shall not be construed as authority to violate, cancel, alter or set aside any of the provisions or requirements of any laws or ordinances of the City and County of San Francisco, nor shall such issuance thereafter prevent requiring corrections of errors or of violations of any applicable law or ordinance of the City and County of San Francisco.

SECTION 110A – SCHEDULE OF FEE TABLES.

1A-A Building Permit Fees

1A-B Other Building Permit and Plan Review Fees

1A-C Plumbing/Mechanical Permit Issuance and Inspection Fees

1A-D Standard Hourly Rates

1A-E Electrical Permit Issuance and Inspection Fee Schedule

1A-F Specialty Permit Fees

1. **Bleachers Permit Fee Table**
2. **Chimney and Flue Permits**
3. **Demolition Permit Fee Table**
4. **Extra Permit Work**
5. **Garage Door Permits**
6. **Grading Permits**

7. House Moving Permit Fee
8. Recommencement of Work Not Completed
9. Reroofing Permits
10. Strong Motion Instrumentation Program Fee
11. Subsidewalk Construction
12. Construction of Impervious Surface in Front Yard Setback Area

1A-G Inspections, Surveys and Reports

1. Standard Inspection Fee
2. Off-Hours Inspection
3. Pre-Application Inspection
4. Reinspection Fee
5. Report of Residential Records (3R)
6. Survey of Nonresidential Buildings
7. Survey of Residential Buildings for any Purpose or Condominium Conversion
8. Temporary Certificate of Occupancy

1A-H Sign Permit Fees

1A-I Reserved

1A-J Miscellaneous Fees

1. Central Permit Bureau Processing Fee
2. Building Numbers
3. Extension of Time: Application Cancellation and Permit Expiration
4. Product Approvals
5. California Building Standards Commission Fee
6. Vacant Building

1A-K Penalties, Hearings, Code Enforcement Assessments

1. Abatement Appeals Board Hearing, Filing Fee
2. Board of Examiners Filing Fees
3. Building Official's Abatement Orders
4. Emergency Order
5. Exceeding the Scope of the Approved Permit

6. **Access Appeals Commission Filing Fee**
7. **Lien Recordation Charges**
8. **Work without Permit: Investigation Fee; Penalty**
9. **Building Commission Hearing Fees**
10. **Additional Hearings Required by Code**
11. **Violation Monitoring**

1A-L Public Information

1. **Public Notification and Record Keeping Fees**
2. **Demolition**
3. **Notices**
4. **Reproduction and Dissemination of Public Information**
5. **Replacement of Approved Plans/Specifications**
6. **Records Retention Fee**

1A-M Boiler Fees

1A-N Energy Conservation

1A-O Reserved

1A-P Residential Code Enforcement and License Fees

1A-Q Hotel Conversion Ordinance Fees

1A-R Refunds

1A-S Unreinforced Masonry Building Retrofit

TABLE 1A-A – BUILDING PERMIT FEES

	NEW CONSTRUCTION [1,3]		*ALTERATIONS* [1,2,3]		*NO PLANS* [1,2,3]
TOTAL VALUATION	*PLAN REVIEW FEE*	*PERMIT ISSUANCE FEE*	*PLAN REVIEW FEE*	*PERMIT ISSUANCE FEE*	*PERMIT ISSUANCE FEE*
$1.00 to $2,000.00	**$131.29 for the first $500.00 plus $5.42 for each additional**	**$56.27 for the first $500.00 plus $2.33 for each additional**	**$144.85 for the first $500.00 plus $2.93 for each additional**	**$62.08 for the first $500.00 plus $1.26 for each additional**	**$167.40 for the first $500.00 plus $3.72 for each additional**

	$100.00 or fraction thereof, to and including $2,000.00	$100.00 or fraction thereof, to and including $2,000.00	$100.00 or fraction thereof, to and including $2,000.00	$100.00 or fraction thereof, to and including $2,000.00	$100.00 or fraction thereof, to and including $2,000.00
$2,001.00 to $50,000.00	$212.59 for the first $2,000.00 plus $13.02 for each additional $1,000.00 or fraction thereof, to and including $50,000.00	$91.22 for the first $2,000.00 plus $5.58 for each additional $1,000.00 or fraction thereof, to and including $50,000.00	$188.80 for the first $2,000.00 plus $17.77 for each additional $1,000.00 or fraction thereof, to and including $50,000.00	$80.98 for the first $2,000.00 plus $7.62 for each additional $1,000.00 or fraction thereof, to and including $50,000.00	$223.20 for the first $2,000.00 plus $5.42 for each additional $1,000.00 or fraction thereof, to and including $50,000.00
$50,001.00 to $200,000.00	$837.55 for the first $50,000.00 plus $8.68 for each additional $1000.00 or fraction thereof, to and including $200,000.00	$359.06 for the first $50,000.00 plus $3.72 for each additional $1000.00 or fraction thereof, to and including $200,000.00	$1,041.76 for the first $50,000.00 plus $10.63 for each additional $1000.00 or fraction thereof, to and including $200,000.00	$446.74 for the first $50,000.00 plus $4.56 for each additional $1000.00 or fraction thereof, to and including $200,000.00	$483.36 for the first $50,000.00 plus $2.66 for each additional $1000.00 or fraction thereof, to and including $200,000.00
$200,001.00 to $500,000.00	$2,139.55 for the first $200,000.00 plus $6.07 for each additional $1000.00 or fraction thereof, to and including $500,000.00	$917.06 for the first $200,000.00 plus $2.60 for each additional $1000.00 or fraction thereof, to and including $500,000.00	$2,636.26 for the first $200,000.00 plus $8.68 for each additional $1000.00 or fraction thereof, to and including $500,000.00	$1,130.74 for the first $200,000.00 plus $3.72 for each additional $1000.00 or fraction thereof, to and including $500,000.00	Plans Required for Submittal
$500,001.00 to $1,000,000.00 (1M)	$3,960.55 for the first $500,000.00 plus $5.42 for each additional $1,000.00 or fraction thereof, to and including $1,000,000.00	$1,697.06 for the first $500,000.00 plus $2.33 for each additional $1,000.00 or fraction thereof, to and including $1,000,000.00	$5,240.26 for the first $500,000.00 plus $5.97 for each additional $1,000.00 or fraction thereof, to and including $1,000,000.00	$2,246.74 for the first $500,000.00 plus $2.56 for each additional $1,000.00 or fraction thereof, to and including $1,000,000.00	Plans Required for Submittal
$1,000,001.00 to $5,000,000.00 (5M)	$6,670.55 for the first $1,000,000.00 plus $4.77 for each additional $1,000.00 or fraction thereof, to and including $1,000,000.00	$2,862.06 for the first $1,000,000.00 plus $2.05 for each additional $1,000.00 or fraction thereof, to and including $1,000,000.00	$8,225.26 for the first $1,000,000.00 plus $5.42 for each additional $1,000.00 or fraction thereof, to and including $1,000,000.00	$3,526.74 for the first $1,000,000.00 plus $2.33 for each additional $1,000.00 or fraction thereof, to and including $1,000,000.00	Plans Required for Submittal
	$25,751.00 for	$11,062.00 for	$29,905.00 for	$12,847.00 for	Plans Required

$5,000,001 .00 (5M) to $50 M	the first $5,000,000.00 plus $1.86 for each additional $1,000.00 or fraction thereof	the first $5,000,000.00 plus $1.04 for each additional $1,000.00 or fraction thereof	the first $5,000,000.00 plus $1.67 for each additional $1,000.00 or fraction thereof	the first $5,000,000.00 plus $0.94 for each additional $1,000.00 or fraction thereof	for Submittal
$50M to $100M	$109,451.00 for the first $50,000,000.00 plus $1.88 for each additional $1,000.00 or fraction thereof	$57,862.00 for the first $50,000,000.00 plus $1.34 for each additional $1,000.00 or fraction thereof	$105,055.00 for the first $50,000,000.00 plus $2.05 for each additional $1,000.00 or fraction thereof	$55,147.00 for the first $50,000,000.00 plus $1.47 for each additional $1,000.00 or fraction thereof	Plans Required for Submittal
$100M to $200M	$203,451.00 for the first $100,000,000.00 plus $0.84 for each additional $1,000.00 or fraction thereof	$124,862.00 for the first $100,000,000.00 plus $0.92 for each additional $1,000.00 or fraction thereof	$207,555.00 for the first $100,000,000.00 plus $0.75 for each additional $1,000.00 or fraction thereof	$128,647.00 for the first $100,000,000.00 plus $0.84 for each additional $1,000.00 or fraction thereof	Plans Required for Submittal
$200M and up	$287,451.00 for the first $200,000,000.00 plus $1.54 for each additional $1,000.00 or fraction thereof	$216,862.00 for the first $200,000,000.00 plus $1.89 for each additional $1,000.00 or fraction thereof	$282,555.00 for the first $200,000,000.00 plus $1.59 for each additional $1,000.00 or fraction thereof	$212,647.00 for the first $200,000,000.00 plus $1.93 for each additional $1,000.00 or fraction thereof	Plans Required for Submittal

NOTES:

1. These permit fees do not include other fees that may be required by other Departments: Public Works, Planning, Fire, Public Health, etc., nor do they include plumbing, electrical or mechanical permit fees unless so stated in the other fee tables.

2. A surcharge of $5.00 shall be added to those alteration permits sought for buildings classified as R3 (one/two-family dwelling) and E3 (licensed day care) that were constructed prior to 1979 to implement the interior lead safe work practices provisions of Section 3407 *et seq.* of this code.

3. All permit fees related to reviewing the structural integrity of awning replacements for permits submitted "over the counter" at the Central Permit Bureau are hereby waived for any permit issued to a Small Business Enterprise for such activities during the month of May. For purposes of this Section, a Small Business Enterprise shall be a business that has 100 or fewer employees. The Planning Department and the Department of Building Inspection shall establish process by which those two departments will certify that an applicant is a Small Business Enterprise for the purpose of this Section and Section 355 of the Planning Code.

(Amended by Ord. 63-14 , File No. 140312, App. 5/8/2014, Eff. 6/7/2014; Ord. 159-15 , File No. 150559, App. 9/17/2015, Eff. 10/17/2015)

TABLE 1A-B – OTHER BUILDING PERMIT AND PLAN REVIEW FEES

1. Plan Review Fees Not Covered in Table 1A-A:	Plan Review Hourly Rate - Minimum One Hour
2. Back Check Fee:	Plan Review Hourly Rate - Minimum One Hour
3. Commencement of work not started: a. Building, Plumbing, Mechanical, or Electric Permit Fee: b. Plan Review Fee:	See SFBC Section 106A.4.4.1 Note: Compliance with additional codes is required. 75% of current fee 100% of current fee
4. Permit Facilitator Fee:	Plan Review Hourly Rate Hourly - Minimum Three Hours See SFBC Section 106A.3.6
5. Pre-application Plan Review Fee:	Plan Review Hourly Rate - Minimum Two Hours Per Employee
6. Reduced Plan Review Fee:	50% of the Plan Review Fee
7. Sign Plan Review Fee:	See Table 1A-A– Building Permit Fees
8. Site Permit Fee:	25% of Plan Review Fee based on Table 1A-A. Minimum fee $500.00
9. Premium Plan Review Fee– Submitted application:	50% of Plan Review Fee plus $1,000.00
10. Premium Plan Review Fee– Over the counter building plan review by appointment:	50% of Plan Review Fee plus $400.00
11. Other Services:	Hourly Rates per Table 1A-D

NOTES:

1. See Table 1A-D-Standard Hourly Rates.
2. "Back check" is defined as: (1) that time spent reviewing applicant-initiated revisions to plans that do not affect the valuation, scope or size of the project; or (2) any additional plan review performed on required corrections to plans beyond the standard review process, as determined by the Building Official. Plan review required for applicant-initiated revisions effecting valuation, scope, or size or project may be assessed a new plan review fee in addition to the initial plan review fee as determined by the Building Official.

TABLE 1A-C – PLUMBING/MECHANICAL PERMIT ISSUANCE AND INSPECTION FEES

A. Permit applicants shall show a complete itemization of the proposed scope of work and select the appropriate fee category.

B. A separate permit is required for each structure, condominium unit, existing apartment unit, high- rise office floor, suite, or tenant space.

C. Standard hourly issuance/inspection rates will apply for installations not covered by the fee categories below.

D. Fees shall be paid in full prior to approval for occupancy, job card signature, gas tags, or final signoff, as applicable.

E. See Table 1A-R for refund policy.

1. Permit Issuance Fees by Category:

CATEGORY 1P	Single Residential Unit– water service, sewer replacement, single plumbing fixture installation, shower pan installation, or kitchen or bathroom remodels	$148.80
CATEGORY 1M	Single Residential Unit– mechanical gas appliance (furnace, hydronic heat, heat pump)	$139.50
CATEGORY 2PA	Plumbing installation for residential construction with 6 or less dwelling units or guest rooms; without underground plumbing installation (includes water, gas, waste, and vent)	$255.75
CATEGORY 2PB	Plumbing installation for residential construction with 6 dwelling units or guest rooms or less; with underground plumbing installation (includes water, gas, waste, and vent)	$372.00
CATEGORY 2M	Mechanical gas appliances for residential construction with 6 dwelling units or guest rooms or less	$223.20
CATEGORY 3PA	7– 12 Dwelling Units	$534.75
CATEGORY 3PB	13– 36 Dwelling Units	$1,069.50
CATEGORY 3PC	Over 36 Dwelling Units	$4,464.00
CATEGORY 3MA	7– 12 Dwelling Units	$534.75
CATEGORY 3MB	13– 36 Dwelling Units	$1,069.50
CATEGORY 3MC	Over 36 Dwelling Units	$4,464.00
CATEGORY 4PA	Fire sprinklers– one and two family dwelling units	$139.50
CATEGORY 4PB	Fire sprinklers– 3 or more dwelling units or guest rooms, commercial and office– per floor	$232.50

CATEGORY 5P/5M	Office, mercantile & retail buildings: New or Tenant Improvements; heating/cooling equipment to piping connected thereto– per tenant or per floor, whichever is less	$302.25
CATEGORY 6PA	Restaurants (new and remodel) fee includes 5 or less drainage and or gas outlets– no fees required for public or private restroom	$289.23
CATEGORY 6PB	Restaurants (new and remodel) fee includes 6 or more drainage and/or gas outlets– no fees required for public or private restroom	$818.40
CATEGORY 8	New boiler installations over 200 kbtu	$255.75
CATEGORY 9P/M	Surveys	$279.00
CATEGORY 10P/M	Condominium conversions	$339.45
BOILER MAINTENANCE PROGRAM	(Permit to operate– PTO) See Table 1A-M– Boiler Fees for additional boiler- related fees.	$48.36 each
2.	Standard inspection fees Reinspection or additional inspection per SFBC Section 108A.8	Hourly inspection rate

A permit may include more than one category, and each category will be charged separately.

(Amended by Ord. 159-15 , File No. 150559, App. 9/17/2015, Eff. 10/17/2015)

TABLE 1A-D – STANDARD HOURLY RATES

1. Plan Review $173.91 per hour
2. Inspection $158.10 per hour, $167.40 per hour for OSHPD inspection
3. Administration $96.72 per hour, with a minimum charge of $48.36 for 30 minutes or less

(Amended by Ord. 159-15 ; File No. 150559, App. 9/17/2015, Eff. 10/17/2015)

TABLE 1A-E – ELECTRICAL PERMIT ISSUANCE AND INSPECTION FEE SCHEDULE

A. Permit applicants are required to itemize the proposed scope of work and select the appropriate category and fee amount.

B. Separate permits are required for each structure, condominium unit, existing dwelling unit (except in R3 occupancies), common area, commercial office floor or individual tenant space.

C. Standard hourly permit issuance and inspection rates shall apply for installations not covered by this fee schedule.

D. Fees shall be paid in full prior to obtaining: occupancy approval, job card signature, permission to energize, or final signoff, as applicable.

E. For the purpose of fee calculation: appliances and utilization equipment each count as one outlet or device in addition to receptacles, switches, and light outlets.

F. All permit fees related to reviewing the installation of pedestrian level lighting are hereby waived for any permit issued for such activities for Small Business Enterprises during the month of May. For purposes of this Section, a Small Business Enterprise shall be a business that has 100 or fewer employees. The Planning Department and the Department of Building Inspection shall establish process by which those two departments will certify that an applicant is a Small Business Enterprise for the purpose of this Section and Section 355 of the Planning Code.

See Table 1A-R for refund policy.

See Table 1A-J for permit extensions.

DRAFT

Category 1
General Wiring: Residential Buildings up to 10,000 sq. ft.

Up to 10 outlets and/or devices $148.80

11 to 20 outlets and/or devices $223.20

Up to 40 outlets and/or devices, includes up to 200 Amp service upgrade $279.00

* More than 40 outlets and/or devices $390.60

* Buildings of 5,000 to 10,000 sq. ft. $558.00

Category 2
General Wiring: Nonresidential Buildings & Residential Buildings over 10,000 sq. ft.

Up to 5 outlets and/or devices $223.20

6 to 20 outlets and/or devices $334.80

* Areas up to 2,500 sq. ft. $446.40

* 2,501 to 5,000 sq. ft. $669.60

* 5,001 to 10,000 sq. ft. $1,116.00

* 10,001 to 30,000 sq. ft. $2,232.00

* 30,001 to 50,000 sq. ft. $4,464.00

* 50.001 to 100,000 sq. ft. $6,696.00

* 100,001 to 500,000 sq. ft. $13,392.00

* 500,001 to 1,000,000 sq. ft. $30,132.00

* More than 1,000,000 sq. ft. $60,264.00

* Includes Category 3 & 4 installations in new buildings or major remodel work

Category 3
Service Distribution and Utilization Equipment
Includes: Generators, UPS, Transformers and Fire Pumps
(Use Category 3 for installations separate from the scope of work in Categories 1 or 2)

225 amps rating or less $223.20

250 to 500 amps $334.80

600 to 1000 amps $446.40

1,200 to 2,000 amps $669.60

More than 2,000 amps $892.80

600 volts or more $892.80

150 kva or less $223.20

151 kva or more $334.80

Fire Pump installations $446.40

Category 4
Installations of Fire Warning and Controlled Devices
(Use Category 4 for installations separate from the scope of work in Categories 1 or 2)

Up to 2,500 sq. ft. $223.20

2,501 to 5,000 sq. ft. $334.80

5,001 to 10,000 sq. ft. $669.60

10,001 to 30,000 sq. ft. $1,116.00

30,001 to 50,000 sq. ft. $2,232.00

50,001 to 100,000 sq. ft. $4,464.00

100,001 to 500,000 sq. ft. $6,696.00

500,001 to 1,000,000 sq. ft. $15,066.00

More than 1,000,000 sq. ft. $30,132.00

Fire Warning and Controlled Devices (Retrofit Systems)

Buildings of not more than 6 dwelling units $334.80

Buildings of not more than 12 dwelling units $446.40

Buildings with more than 12 dwelling units and non-residential occupancy

Building up to 3 floors $669.60

4-9 floors $1,339.20

10-20 floors $2,232.00

21-30 floors $4,464.00

More than 30 floors $6,696.00

Category 5
Miscellaneous Installations

Remodel/Upgrade of Existing Hotel Guest/SRO Rooms

Up to 6 rooms $279.00

Each additional group of 3 rooms $139.50

Data, Communications, and Wireless Systems

10 cables or less Exempt

11 to 500 cables $158.10

Each additional group of 100 cables $23.25

Security Systems, 10 components or less $158.10

Each additional group of 10 components $9.30

Includes installations and devices that interface with life safety systems; excludes installations in R3 Occupancies

Office Workstations, 5 or less $158.10

Each additional group of 10 workstations $46.50

Temporary Exhibition Wiring, 1 to 100 booths (1 inspection) $223.20

Each additional group of 10 booths $23.25

Exterior Electrical Sign $158.10

Interior Electrical Sign $158.10

Each Additional Sign, at the same address $37.20

Garage Door Operator (Requiring receptacle installation) $158.10

Quarterly Permits $348.75

Maximum five outlets in any one location

Survey, per hour or fraction thereof $158.10

Survey, Research, and Report preparation, per hour or fraction thereof $279.00

Witness Testing: life safety, fire warning, emergency, and energy management systems

Hourly Rate $158.10

Additional hourly rate $158.10

Off-hour inspections: (two hour minimum) $316.20

Additional off-hourly rate $237.15

Energy Management, HVAC Controls, and Low-Voltage Wiring Systems

1-10 floors (3 inspections) $446.40

Each additional floor $46.50

Solar Photovoltaic Systems

10 KW rating or less $158.10

Each additional 10 KW rating $93.00

Standard Hourly Inspection Rate See Table 1A-D

(Amended by Ord. 63-14 , File No. 140312, App. 5/8/2014, Eff. 6/7/2014; Ord. 159-15 , File No. 150559, App. 9/17/2015, Eff. 10/17/2015)

TABLE 1A-F – SPECIALTY PERMIT FEES

1. Bleachers Permit Fee:	See Table 1A-A for New Construction Fees
2. Chimney and Flue Permit Fee:	See Table 1A-A for New Construction Fees
3. Demolition Permit Fee:	See Table 1A-A for New Construction Fees
4. Extra Permit Work: (exceeding scope)	2 times the standard fees for work remaining to be done or not covered in original permit scope
5. Garage Door Permit Fee: Each garage door in an existing building	$148.80
6. Grading Permit Fee:	See Table 1A-A for New Construction Fees
7. House Moving Permit Fee:	Standard Hourly Inspection Rate - Minimum 3 Hours
8. Recommencement of Work Not Completed:	Standard Inspection Fee per Table 1A-G; See also Table 1A-B– Commencement of Work Not Started
9. Reroofing Permit Fee:	$148.80 for Single-Family homes and duplexes $223.20 for all others
10. Strong Motion Instrumentation Program Fee:	
Group R Occupancies of 3 stories or less, except hotels and motels	0.00013 times the valuation
Hotels and motels, all buildings greater than 3 stories, all occupancies other than Group R	0.00024 times the valuation
Minimum fee	$1.60
11. Subsidewalk Construction Permit Fee:	
Construction	See Table 1A-A for New Construction Fees
12. Construction of impervious surface in the required front and setback area	$148.80

(Amended by Ord. 159-15 , File No. 150559, App. 9/17/2015, Eff. 10/17/2015)

TABLE 1A-G – INSPECTIONS, SURVEYS AND REPORTS

1. Standard Hourly Rate	See Table 1A-D
2. Off-hours inspection	Standard Hourly Inspection Rate - Minimum Two Hours plus permit fee
3. Pre-application inspection	Standard Hourly Inspection Rate - Minimum Two Hours
4. Re-inspection fee	Standard Hourly Inspection Rate
5. Report of residential records (3R)	$148.80
6. Survey of nonresidential buildings:	Standard Hourly Inspection Rate - Minimum Two Hours
7. Survey of residential buildings for any purpose or Condo Conversions:	
Single unit	$1,627.50
Two to four units	$2,139.00
Five + units	$2,139.00 plus Standard Hourly Inspection Rate
Hotels:	
Includes 10 guestrooms	$1,627.50
11 + guestrooms	$2,139.00 plus $39.53 per guestroom over 11
8. Temporary Certificate of Occupancy	Standard Hourly Inspection Rate - Minimum Two Hours

(Amended by Ord. 159-15 , File No. 150559, App. 9/17/2015, Eff. 10/17/2015)

TABLE 1A-H – SIGN PERMIT FEES

Nonelectric and electric sign permit fee– See Table 1A-A for New Construction Fees

NOTE: See also Table 1A-E for required Electrical Sign Permits and Inspections

TABLE 1A-I – RESERVED

TABLE 1A-J – MISCELLANEOUS FEES

1. Central Permit Bureau Processing Fee for Miscellaneous	Standard Administration Hourly Rate -

Permits from other disciplines	Minimum One- Half Hour
2. Building numbers (each entrance)	$96.72 NEW ADDRESSES $195.30 CHANGE OF EXISTING ADDRESS OR LOT NUMBER
3. Extension of time: application cancellation and permit expiration:	
Each application extension (in plan review)	$148.80 plus 20% of All Plan Review Fees
Each permit extension	$148.80 plus 10% of All Permit Issuance Fees
4. Product approvals:	
General approval - initial or reinstatement	Standard Hourly Plan Review Rate - Minimum Three Hours
General approval - modification or revision	Standard Hourly Plan Review Rate - Minimum Three Hours
General approval - biannual renewal	Standard Hourly Plan Review Rate - Minimum Three Hours
5. California Building Standards Commission Fee	Pursuant to the provisions of California Health and Safety Code Sections 18930.5, 18931.6, 18931.7 and 18938.39
6. Vacant building - Initial and annual registration fee	Standard Inspection Hourly Rate - Minimum Four and One-Half Hours

(Amended by Ord. 159-15 , File No. 150559, App. 9/17/2015, Eff. 10/17/2015)

TABLE 1A-K – PENALTIES, HEARINGS, CODE ENFORCEMENT ASSESSMENTS

1. Abatement Appeals Board hearing, filing fee	$158.10 per case
2. Board of Examiners filing fees:	
Each appeal for variance from interpretation of code requirements	Standard Hourly Plan Review Rate - Minimum Two Hours
Each appeal for approval of substitute materials or methods of construction	Standard Hourly Plan Review Rate - Minimum Four Hours
3. Building Official's abatement order hearing	Standard Hourly Plan Review Rate - Minimum Two Hours
4. Emergency order	Standard Hourly Plan Review Rate - Minimum

	Two Hours
5. Exceeding the scope of the approved permit	2 times the issuance fee
6. Access Appeals Commission:	
Filing fee	Standard Hourly Plan Review Rate - Minimum Two Hours per appeal
Request for a rehearing	Standard Hourly Plan Review Rate - Minimum Two Hours
7. Lien recordation charges	$173.91 or 10 percent of the amount of the unpaid balance, including interest, whichever is greater
8. Work without permit: investigation fee:	
Building, Electrical, Plumbing or Mechanical Code violations	9 times the Permit Issuance Fee plus the original permit fee
9. Building Inspection Commission hearing fees:	
Notice of appeal	Standard Hourly Plan Review Rate - Minimum Four Hours
Request for jurisdiction	Standard Hourly Plan Review Rate - Minimum Four Hours
Request for rehearing	Standard Hourly Plan Review Rate - Minimum Two Hours
10. Additional hearings required by Code	Standard Hourly Plan Review Rate - Minimum Four Hours
11. Violation monitoring fee (in-house)	Standard Administration Hourly Rate– Minimum One- Half Hour Monthly

(Amended by Ord. 159-15 , File No. 150559, App. 9/17/2015, Eff. 10/17/2015)

TABLE 1A-L – PUBLIC INFORMATION

1. Public notification and record keeping fees:	
Structural addition notice	Standard Administration Hourly Rate - Minimum One- Half Hour
Affidavit record maintenance	$15.00
Posting of notices (change of use)	Standard Administration Hourly Rate - Minimum One- Half Hour

Requesting notice of permit issuance (each address) per year	Standard Administration Hourly Rate - Minimum One- Half Hour
30-inch by 30-inch (762 mm by 762 mm) sign	$15.00

2. Demolition:

Notice of application and permit issuance by area/interested parties:	
1 area (1 area = 2 blocks)	$96.72 per annum per each area

3. Notices:

300-foot (91.44 m) notification letters	Standard Administration Hourly Rate - Minimum One and One-Half Hour
Residential tenants notification	Standard Administration Hourly Rate - Minimum One- Half Hour

4. Reproduction and dissemination of public information:

Certification of copies:	
1 to 10 pages	$15.00
Each additional 10 pages or fraction thereof	$3.50
Electrostatic reproduction:	
Each page photocopy	$0.10
35 mm duplicards from microfilm rolls (Diazo card)	$3.50
Hard copy prints:	
8 1/2 inch by 11 inch copy from microfilm roll	$0.10
11 inch by 17 inch copy of plans	$0.10
8 1/2 inch by 11 inch copy from aperture cards or from electronic copies of building records (scanned or computer generated)	$0.10

5. Replacement of approved construction documents:

Each sheet of plans (Larger than 11 × 17)	ACTUAL COST CHARGED BY VENDOR

6. Records Retention Fee

Each page of plans per page of plans	$3.00
Each page of supporting documentation (e.g., soil reports, structural calculations, acoustical reports, energy calculations, etc.) per page of documentation	$0.10

(Amended by Ord. 159-15 , File No. 150559, App. 9/17/2015, Eff. 10/17/2015)

TABLE 1A-M – BOILER FEES

Permit to install or replace	See Table 1A-C - Category 8
Permit to operate (certificate issued)	Standard Administration Hourly Rate - Minimum One- Half Hour
Renew permit to operate (certificate issued)	Standard Administration Hourly Rate - Minimum One- Half Hour
Replacement of issued permit to operate	Standard Administration Hourly Rate - Minimum One- Half Hour
Connection to utility company provided steam (includes permit to operate)	Standard Administration Hourly Rate - Minimum One- Half Hour
Boiler Maintenance Program	$48.36

Renewal required:

1. Low-pressure boilers every 12 months. (See definition of low-pressure boilers in Chapter 2.)
2. Water heaters when alteration or replacement permits are issued.

(Amended by Ord. 159-15 , File No. 150559, App. 9/17/2015, Eff. 10/17/2015)

TABLE 1A-N – ENERGY CONSERVATION

	INITIAL INSPECTION	*COMPLIANCE INSPECTION*
Single-family dwellings and two-family dwellings	$158.10	$79.05
Apartment houses and residential hotels:		
Up to 20 rooms	$237.15	$118.58
Each additional 10 rooms or portion thereof	$79.05	$48.36
Energy reports and certificates:		$48.36
Filing fee for appeals:		$96.72

Certification of qualified energy inspector:		$186.00

(Amended by Ord. 159-15 , File No. 150559, App. 9/17/2015, Eff. 10/17/2015)

TABLE 1A-O – RESERVED

TABLE 1A-P – RESIDENTIAL CODE ENFORCEMENT AND LICENSE FEES

1. One- and Two-family dwelling unit fees:	$52.00 per rental unit
2. Apartment house license fees:	
Apartment houses of 3 to 12 units	$326.00 per annum
Apartment houses of 13 to 30 units	$488.00 per annum
Apartment houses of more than 30 units	$488.00 and $55.00 for each additional 10 units or portion thereof
3. Hotel license fees:	
Hotels of 6 to 29 rooms	$256.00 per annum
Hotels of 30 to 59 rooms	$470.00 per annum
Hotels of 60 to 149 rooms	$584.00 per annum
Hotels of 150 to 200 rooms	$660.00 per annum
Hotels of more than 200 rooms	$660.00 and $55.00 for each additional 25 rooms or portion thereof

TABLE 1A-Q – HOTEL CONVERSION ORDINANCE FEES

Annual unit usage report	$96.72
1. Appeal of initial or annual status determination:	Standard Inspection Hourly Rate pursuant to Section 110A of this code shall apply for Department Inspector's work on such request plus fees for Hearing Officer
2. Challenge to claims of exemption:	
Usage report	$48.36
Claim of exemption based on low-income housing	$316.20

Claim of exemption based on partially completed conversion	$474.30
3. Complaint of unlawful conversion	$48.36
Determination by Department of Real Estate and cost of independent appraisals	Actual costs
4. Initial unit usage report	$316.20
5. Permit to convert	$474.30
6. Request for hearing to exceed 25% tourist season rental limit:	
Inspection staff review - standard hourly inspection fee	Standard Inspection Hourly Rate
Statement of exemption - Hearing Officer fee	$316.20
7. Unsuccessful challenge:	
Usage report:	
Inspection staff review - standard hourly inspection fee	Standard Inspection Hourly Rate
Statement of exemption - Hearing Officer fee	$316.20
Request for winter rental:	
Standard hourly inspection fee	Standard Inspection Hourly Rate

(Amended by Ord. 159-15 , File No. 150559, App. 9/17/2015, Eff. 10/17/2015)

TABLE 1A-R – REFUNDS

Partial or complete refunds of only those fees contained herein will be given, provided the applicant meets the refund requirements of the applicable section of this code. No other fees are refundable, except as follows:

1. Application or Permit Issuance Fee:	
Building, plumbing, electrical or mechanical permit issuance fee	Amount paid less $160.00 or actual costs, whichever is greater. No refunds given after work started.
	Amount determined by the Building Official less $160.00
Plan Review Fees (each)	No Refund due after application deemed acceptable for Department of Building Inspection Plan Review
2. Miscellaneous Fees:	Amount paid less $52.00

No refunds less than $52.00

No existing permittee who paid a fee under the fee schedules in effect at the time the fee was paid shall be eligible for a refund or subject to a fee reassessment as a result of an amendment to the fee schedules. If the Building Official determines that an error has been made in the assessment of fees, a refund for the portion determined to be in error may be made upon written request by the applicant.

(Amended by Ord. 159-15 , File No. 150559, App. 9/17/2015, Eff. 10/17/2015)

TABLE 1A-S – UNREINFORCED MASONRY BEARING WALL BUILDING RETROFIT

Review of Inventory Form (Section 1604B.2.1)	Standard Plan Review Hourly Rate - Minimum Two Hours
Review of the summary of the engineering report (Section 1604B.2.3)	Standard Plan Review Hourly Rate - Minimum Two Hours
Board of Examiners filing fees (Section 105A7.4):	
Each appeal for a variance from or interpretation of code requirements	Standard Plan Review Hourly Rate - Minimum Two Hours
Each appeal for the approval of substitute materials or methods of design or construction (Section 105A.7.3)	Standard Plan Review Hourly Rate - Minimum Four Hours

FIGURE 1A-I –1851 HIGH-TIDE LINE MAP

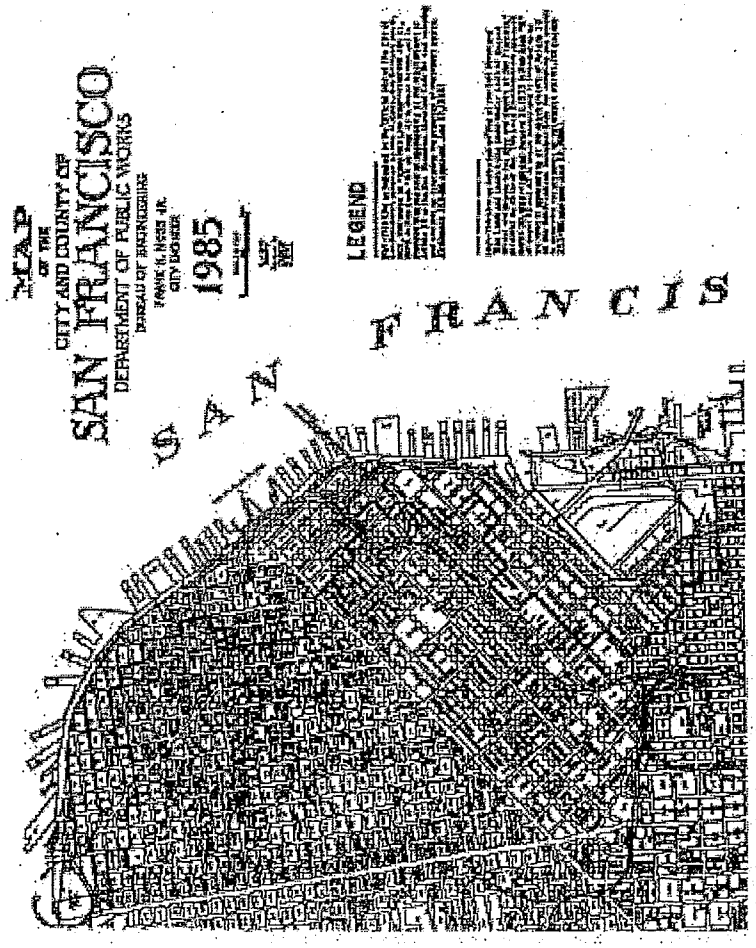
MAP
OF THE
CITY AND COUNTY OF
SAN FRANCISCO
DEPARTMENT OF PUBLIC WORKS
1985
LEGEND
SAN FRANCIS

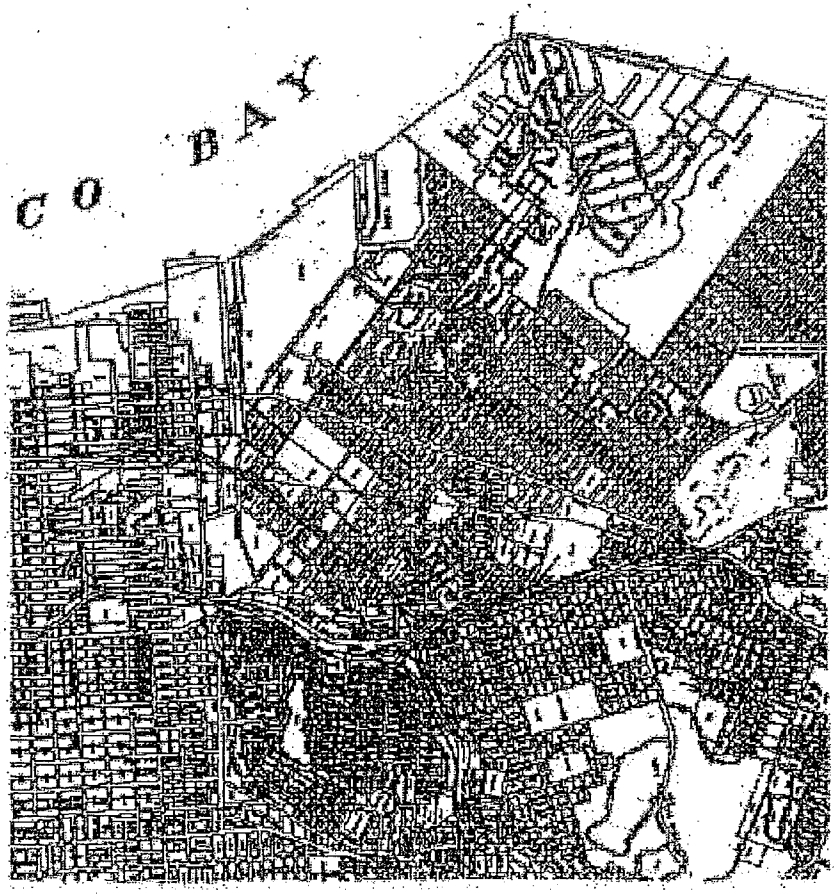

Chapter 2
DEFINITIONS

SECTION 202 – DEFINITIONS

202 Add this definition as follows:

KITCHEN. That portion in a residential dwelling unit that is a room or area used for cooking, food storage and preparation and washing dishes, including associated counter tops and cabinets, refrigerator, stove, ovens and floor area.

*202 Revise the first sentence of the following two definitions under **STANDPIPE SYSTEM:***

STANDPIPE SYSTEM, CLASSES OF. Standpipe classes are as follows:

Class I system. A system providing **3" (76.2 mm)** hose connections to supply water for use by fire

departments and those trained in handling heavy fire streams.

Class III system. A system providing 1-1/2-inch (38 mm) hose stations to supply water for use by building occupants and **3" (76.2 mm)** hose connections to supply a larger volume of water for use by fire departments and those trained in handling heavy fire streams.

Chapter 3
USE AND OCCUPANCY CLASSIFICATION

No San Francisco Building Code Amendments

Chapter 4
SPECIAL DETAILED REQUIREMENTS BASED ON USE AND OCCUPANCY

SECTION 406 – MOTOR-VEHICLE-RELATED OCCUPANCIES

406.3 Change the section numbering to include the new added section:

406.3 Private garages and carports. Private garages and carports shall comply with Section 406.3.1 through **406.3.7.**

406.3.7 Add the following section:

406.3.7 Ventilation.

Ventilation shall be provided as follows: Natural ventilation shall be required, and such space shall be provided with ventilation outlets in the walls or exterior doors. The total net area of such ventilation outlets shall be 200 square inches (0.129 m^2) for a space up to 1,000 square feet (92.903 m^2) in area and shall be increased 30 square inches (0.0194 m^2) for each additional 200 square feet (18.58 m^2) of floor area up to maximum floor area of 3,000 square feet (278.709 m^2).

SECTION 435 – SPECIAL PROVISIONS FOR LICENSED 24-HOUR CARE FACILITIES IN A GROUP R-2.1, R-3.1, R-4

435.3 Add the following section:

435.3.5 For detached one- and two-family dwellings, and townhouses not more than three stories above grade plane in height with a separate means of egress, buildings housing protective social-care homes or in occupancies housing inmates who are not restrained need not be of one-hour fire-resistive construction when not more than two stories in height. In no case shall individual floor areas exceed 3,000 square feet (279 m^2). The fire-resistive protection of the exterior walls shall not

be less than one hour where such walls are located within 5 feet (1524 nn) of the property line. Openings within such walls are not permitted. Openings within non-rated walls need not be protected. [CRC ~~R325.3.2~~*R335.9*]

SECTION 456 – FENCES

456 Add the following section:

456.1 Fences. Fences on any property containing a Group R Occupancy shall not be higher than 10 feet (3.048 mm). Fences located less than 10 feet (3.048 mm) from any public sidewalk shall not be higher than 10 feet (3.048 mm) unless they are of open-type materials such as chain link fabric. Fence height shall be measured from the level of general existing adjacent ground of the general area prior to the improvement of the properties. A fence or railing placed on top of the retaining wall shall be measured from the top of the wall.
Fences constructed wholly or in part of barbed wire are prohibited, except when permitted with the express written permission of the Building Official, and the Fire Department in the following situations:

1. On top of a fence more than 7 feet (2.134 m) high, protecting a dangerous or hazardous area.

2. Within a private area, enclosed by a seven- foot-high (2.134 m) fence, such that entry to the area is limited by the outer, nonbarbed fence.

3. In special instances for localized protection, and in areas within or atop a building to isolate dangerous conditions.

Chapter 5
GENERAL BUILDING HEIGHTS AND AREAS

No San Francisco Building Code Amendments

Chapter 6
TYPES OF CONSTRUCTION

No San Francisco Building Code Amendments

Chapter 7
FIRE AND SMOKE PROTECTION FEATURES

SECTION 707 – FIRE BARRIERS

707.1 Add a second paragraph to this section as follows:

Information technology rooms shall be in accordance with the Fire Code and Electrical Code.

Chapter 7A [SFM]
MATERIALS AND CONSTRUCTION METHODS FOR EXTERIOR WILDFIRE EXPOSURE

No San Francisco Building Code Amendments

Chapter 8
INTERIOR FINISHES

No San Francisco Building Code Amendments

Chapter 9
FIRE PROTECTION SYSTEMS

SECTION 901 – GENERAL

901.4 Add a second paragraph as follows:

Notwithstanding any other provisions of the California Building Code or other codes or regulations, Fire Department connections shall have 3-inch (76.2 mm) National Standard hose threads.

SECTION 903 – AUTOMATIC SPRINKLER SYSTEMS

903.2.8 Add exception 5 as follows:

5. An automatic residential fire sprinkler system shall not be required when additions or alterations are made to existing townhouses, one- and two- family dwellings not more than three stories above grade plane that do not have an automatic residential fire sprinkler system installed. [CRC 1.1.3, R313.1, R313.2]

Table 903.2.11.6 Add a new line to the end of the Table as follows:

TABLE 903.2.11.6
ADDITIONAL REQUIRED SUPPRESSION SYSTEMS

SECTION	SUBJECT
3202.3.4	**Pedestrian Walkways over Public Streets**

SECTION 905 – STANDPIPE SYSTEMS

905.3.4 Revise this section as follows:

905.3.4 Stages. Stages greater than 1,000 square feet in area (93 m^2) shall be equipped with a Class III wet standpipe system with 1-1/2-inch and **3-inch (38 mm and 76.2 mm)** hose connections on each side of the stage.

SECTION 907 – FIRE ALARM AND DETECTION SYSTEMS

907.2.9.1 Revise Item 3 and Item 4 as follows:

3. The building contains more than **6** dwelling units or sleeping units.

4. Congregate living facilities or congregate residences **three or more stories in height or having an occupant load of 11 or more.**

907.2.9.5 Add the following section:

907.2.9.5 Automatic smoke detection system. An automatic smoke detection system that activates the occupant notification system in accordance with Section 907.6 shall be installed throughout all interior corridors serving sleeping units.

Exceptions:

1. An automatic smoke detection system is not required in buildings that do not have interior corridors serving sleeping units and where each sleeping unit has a means of egress door opening directly to an exit or to an exterior exit access that leads directly to an exit.

2. An automatic smoke detection system is not required in buildings when all of the following conditions are met:

2.1. The building is equipped throughout with a supervised automatic sprinkler system installed in accordance with Section 903.3.1.1 or 903.3.1.2.

2.2. The notification devices will activate upon sprinkler water flow; and

2.3. At least one manual ~~fire alarm box~~ <u>pull station</u> is installed in an approved location.

907.2.11.6 Add a second paragraph as follows:

Group R-3 congregate living facilities having an occupant load of 6 or more shall be provided with

a manual fire alarm system.

SECTION 912 – FIRE DEPARTMENT CONNECTIONS

912 Add the following section:

912.7 Number of connections required. Sprinkler systems requiring a 4-inch (101.6 mm) or larger water service shall have two or more inlet connections as necessary to meet hydraulic demand.

Chapter 10
MEANS OF EGRESS

SECTION 1010 – DOORS, GATES AND TURNSTILES

1010.1.2 Revise item 4 as follows:

4. **Other than the main egress door at the primary entry,** doors within or serving a single dwelling unit in Groups R-2 and R-3.

SECTION 1011 – STAIRWAYS

1011.5.5 Modify the first sentence of the first paragraph as follows:

For all occupancies except R-3 one and two family dwellings and townhouses nosings shall have a curvature or bevel of not less than $^{1}/_{16}$ (1.6 mm) but not more than $^{9}/_{16}$ (14.3 mm) from the foremost projection of the tread. Risers shall be solid and vertical or sloped under the tread above from the underside of the nosing above at an angle not more than 30 degree (0.52 rad) from the vertical.

1011.5.5 Add a second paragraph as follows:

For R-3 one and two family dwellings and townhouses, the radius of curvature at the nosing shall be no greater than 9/16 inch (14mm). A nosing not less than 3/4 inch (19 mm) but not more than 1-1/4 inches (32 mm) shall be provided on stairways with solid risers. The greatest nosing projection shall not exceed the smallest nosing projection by more than 3/8 inch (9.5 mm) between two stories, including the nosing at the level of floors and landings. Beveling of nosings shall not exceed 1/2 inch (12.7 mm).

***Exception*: A nosing <u>projection</u> is not required where the tread depth is <u>no less than</u> 11 inches (279 mm). [*CRC R311.7.5.3*]**

1011.5.5.1 Modify the first sentence of the first paragraph as follows:

<u>For all occupancies except R-3 one and two family dwellings and townhouses</u> the leading edge (nosings) of treads shall project not more than $1^{1}/_{4}$ inches (32 mm) beyond the tread below.

1011.12 Add a sentence to the end of the Exception as follows:

Exception: Other than where required by Section 1011.12.1, in buildings without an occupied roof access

to the roof from the tip story shall be permitted to be by an alternating tread device, a ships ladder or a permanent ladder. **Stairs or ladders used only to attend equipment or window wells are exempt from the requirements of this chapter.**

1011.12.3 Add new sections as follows:

1011.12.3 <u>Stairway replacement.</u> Stairways that replace existing stairways in residential occupancies and which complied with the code in effect at the time they were constructed, and which have been adequately maintained and increased in relation to any increase in occupant load, alteration or addition, or any change in occupancy, may be reconstructed in the same configuration and construction as the existing stairways.

SECTION 1012 – RAMPS

1012.2 Add an exception as follows:

***Exception*: For R-3 one and two family dwellings and townhouses, where it is technically infeasible to comply because of site constraints, ramps may have a maximum slope of one unit vertical in eight horizontal (12.5 percent). [CRC R311.8.1]**

SECTION 1013 – EXIT SIGNS

1013.1 Add the following sentence after the exceptions:

Doorways or other openings leading to a fire escape, except within individual dwelling units, shall be provided with a sign reading "FIRE ESCAPE" in letters not less than 6 inches (152 mm) high, in high contrast with the background.

SECTION 1015 – GUARDS

1015.4 Revise exception 1 as follows:

1. **For occupancies other than R-3 and Townhouses,** from a height of 36 inches (914 mm) to 42 inches (1067 mm), guards shall not have openings which allow passage of a sphere 4 3/8 inches (111 mm) in diameter.

SECTION 1016 – EXIT ACCESS

1016.2 Add item 5 as follows:

7. [Reference CRC R311.1] For one- and two- family dwellings and townhouses, means of egress is allowed to pass through rooms and intervening spaces except garages.

1016.3 Add a section as follows:

1016.3 [Reference CRC R311.4] Vertical egress. For habitable levels or basements in R-3 occupancies or townhouses that are located more than one story above or more than one story

below an egress door, the maximum travel distance from any occupied point to a stairway or ramp that provides egress from such habitable level or basement shall not exceed 50 feet (15240 mm).

Add chapter as follows:

Chapter 10A
SECURITY REQUIREMENTS

SECTION 1001A – SCOPE

1001A.1 General. This chapter shall apply to all Group R, Division 1 and R, Division 2 Occupancies.

1001A.2 Apartment houses. Apartment houses (Group R, Division 1 and R, Division 2 Occupancies) and buildings containing more than two residential condominium units shall meet the security requirements of this chapter.

1001A.3 Hotels and motels. Hotels and motels shall comply with the security requirements of this chapter. For the purpose of this chapter, any building open to the public and offering accommodations to transient persons for compensation shall be considered as a hotel or motel.

SECTION 1002A – DEFINITIONS

For the purpose of this chapter, certain terms are defined as follows:

AUXILIARY LOCKING DEVICE is a secondary locking system added to the primary locking system to provide additional security.

BURGLARY-RESISTANT GLAZING MATERIALS are materials which are defined in ANSI/UL Standard 972.

DEADBOLT is a lock bolt which must be actuated by a key, a knob or thumb-turn and when projected becomes locked against return by end pressure, and does not have spring action, as a latch bolt does. A SINGLE CYLINDER DEADBOLT is a deadbolt lock which is activated from the outside by a key and from the inside by a knob, thumb-turn lever or similar mechanism. A DOUBLE CYLINDER DEADBOLT is a deadbolt which can only be activated by a key from both interior and exterior.

DEADLATCH or DEADLOCKING LATCH BOLT is a spring-actuated latch bolt having a beveled end and an incorporated plunger which, when depressed, automatically locks the projected latch bolt against return by end pressure.

PRIMARY LOCKING DEVICE is the single locking system on a door or window unit whose function is to prevent unauthorized intrusion.

WINDOW LOCKING DEVICE is part of a window assembly which is intended to prevent movement of the movable sash, and may be the sash lock or sash operator.

SECTION 1003A – GENERAL REQUIREMENTS FOR SECURITY

1003A.1 Clearances. The clearance between the door and the frame and between meeting edges of doors swinging in pairs shall not exceed 1/8 inch (3.2 mm). The clearance between the door and the floor with either flush or raised sill shall be not more than 3/4 inch (19.1 mm).

1003A.2 Door assemblies. Excluding main entry doors, all exterior swinging doors, and swinging interior and exterior entry doors, including assemblies and related hardware, which are directly accessible from the ground level or by stairs or by ramp, or from roof areas, or parking lot, or garage areas, shall meet the requirements of Grade 20 of ANSI/ASTM F476, Standard Test Methods for Security of Swinging Door Assemblies.

All such doors shall be self-closing continuously locked, and openable from the interior with no special effort or knowledge or key. Where electrically operated locks are used, they must be self-latching and locking and shall have manual release capability from the interior requiring no special effort or knowledge or key.

1003A.2.1 Main entrance. All main entry doors, including electrically operated main entry doors, shall be provided with a primary locking device. "Main entry doors" shall be defined as exterior doors leading directly into the lobby, registration areas or employee entrances.

1003A.2.2 Viewer. Each door shall be provided with a minimum 135-degree viewer which does not have sighting capability when viewed from the outside. Mounting height shall not exceed 58 inches (1473 mm).

1003A.3 Fire-rated door assemblies. Fire-rated door assemblies shall meet the requirements of Grade 20, ANSI/ASTM F476.

1003A.4 Glazing. All glazing within 40 inches (1016 mm) of any locking mechanism of exterior and interior dwelling unit doors shall be of safety glass or burglar-resistant glazing. This requirement shall not exempt the swinging door assembly standards of Grade 20 of ANSI/ASTM F476.

1003A.5 Metal gates. Metal gates shall conform to the following:

1. Latch bolt protected by a security plate.
2. Hinges, bolts, screws shall be nonremovable.
3. Areas within 40 inches (1016 mm) of latch mechanism protected by mesh screen or approved equal.
4. Interior release mechanism protected with cover.
5. For electrically operated locks, see Section 1003A.2.

1003A.6 Sliding glass doors. Sliding glass door assemblies shall be so designed that the door cannot be lifted from the track when the door is in a locked position.

In addition to the primary locking device, all sliding glass doors shall have an auxiliary locking device permanently mounted and not accessible from the exterior of the building but easily accessible from the interior.

1003A.7 Sliding glass windows. Sliding glass window assemblies shall be so designed that the moving panel cannot be lifted from the track while in a closed position.

1003A.8 Parking areas. Parking space numbering shall not correspond to the guest room or dwelling unit number.

Exterior parking areas and access thereto shall be provided with a minimum of 1/2 foot-candle (5.38 lx) of light on the parking surface when the area is unoccupied. Lighting devices shall be protected by weather- and vandalism-resistant covers.

SECTION 1004A – SPECIAL HOTEL AND MOTEL SECURITY REQUIREMENTS

1004A.1 Entry doors to guest rooms.
EXCEPTION: Residential care facilities licensed by the State of California under Title 22 of the California Code of Regulations shall not be required to comply with the requirements of this subsection.

Locks shall be a combination of minimum 1/2-inch (12.7 mm) throw deadlatch with a minimum 1-inch (25.4 mm) deadbolt.

All locks shall be capable of locking out all keys, except the emergency keys for guest privacy while inside the room, and so constructed that both deadlatch and deadbolt are retracted simultaneously by a single knob or lever.

1004A.2 Communicating door between guest rooms. Communicating doors between guest rooms if not required to be fire-rated shall meet the requirements of Grade 20 of ANSI/ASTM F476 and be of minimum 1 3/8-inch (35 mm) bonded wood core or approved equal.

1004A.3 Roof openings. All skylights leading directly to guest rooms, offices and enclosed commercial space shall be provided with burglary- resistant glazing as defined in Section 1002A.

1004A.4 Message and key box – front desk. The message and room key location at the front desk shall not be visible from public view so as to determine an unoccupied room.

SECTION 1005A – SPECIAL APARTMENT HOUSE AND CONDOMINIUM SECURITY REQUIREMENTS

1005A.1 Voice communications. A two-way voice communication system shall be provided between the common entry door and all interior dwelling units. All systems shall provide direct communication.

1005A.2 Lighting. Lighting shall be a minimum of 1/2 foot-candle (5.38 lx) of light on the ground surface from the street to the entry door. Lighting devices shall be protected by weather- and vandalism-resistant covers.

1005A.3 Master keying. Exterior and main entrance door locks shall not be on any master key system.

1005A.4 Entry doors. Entry doors and door assemblies shall comply with the following:

1005A.4.1 Locks shall be combination 1/2-inch (12.7 mm) throw deadlatch with a minimum 1-inch (25.4 mm) throw deadbolt, and so constructed that both the deadlatch and deadbolt retract simultaneously by knob or lever. The deadbolt shall have the ability to be thrown from the exterior.

1005A.5 Exit doors. All exit doors from corridors to exit stairways and from interior stairwells and interior fire escapes shall meet the requirements of Grade 20 of ANSI/ASTM F476 and be continuously locked from the outside.

Locking devices shall be self-latching or self- locking and shall be openable from the interior with no special effort or knowledge or key. [See Section 1008.1.9]

1005A.6 Glazed openings. Glazed openings accessible from the ground level, by stairs, ramps, parking lots or garage areas, shall be with approved safety glass or burglar-resistant glazing as defined in Section 1002A. Protective iron grill work may only be installed where it does not interfere with the required means of egress.

1005A.7 Roof openings. All skylights leading directly to interior corridors, stairwells, dwelling units and utility rooms shall be provided with burglary-resistant glazing as defined in Section 1002A.

1005A.8 Garage doors. All doors of the sectional overhead, one-piece overhead, swing or sliding types used on the exterior of a building shall conform to the following standards:

1005A.8.1 Panels of wood doors shall be at least 5/16-inch (7.94 mm) thick, except sectional overhead doors may have panels 1/4-inch (6.35 mm) thick.

1005A.8.2 Aluminum doors shall be constructed of at least 0.025-inch (0.635 mm) thick sheet aluminum, riveted, welded or bolted to framing members at least 12 inches (305 mm) on center.

1005A.8.3 Steel doors shall be constructed of at least 0.023-inch (0.584 mm) thick galvanized steel, riveted, welded or bolted to framing members at least 12 inches (305 mm) on center.

1005A.8.4 Fiberglass sectional doors shall be constructed of formed fiberglass panels of density of at least 5 1/2 oz. per square foot (1678 g/m^2), pressure sealed to aluminum framing members.

1005A.8.5 Overhead doors shall be made lockable by either:

For doors 16 feet (4877 mm) wide or less, a slide bolt - minimum diameter 3/8-inch (9.5 mm) minimum projection 1-1/2 inches (38 mm) - locking into the door jamb, capable of utilizing a padlock with a minimum 9/32-inch (7.14 mm) shackle. For doors over 16 feet (4877 mm) wide, except sectional doors, two slide bolt locks shall be required. Slide bolt assemblies shall be attached to the door with bolts which are nonremovable from the exterior.

Electrical operator with automatic locking capability, either inherently in the mechanism or as an added feature.

By at least one single-bar lock mounted in the end stile, with locking bar or bolt extending into the receiving guide a minimum of 1 inch (25.4 mm), and with minimum five-pin tumble operation. For doors over 16 feet (4877 mm) wide, except sectional doors, two single-bar locks shall be required.

Center locking-handle devices will require actuating straps to be enclosed by rigid conduits securely fastened to the door.

1005A.8.6 Swinging garage doors shall be lockable by a cylinder deadbolt.

1005A.8.7 Doors operated by electrical means shall be provided with manual release capability from the interior, requiring no special effort or knowledge or key.

1005A.8.8 Manually operated chain-driven garage doors shall require approval of the Authority Having Jurisdiction.

Chapter 11
RESERVED

No San Francisco Building Code Amendments

Chapter 11A
HOUSING ACCESSIBILITY

No San Francisco Building Code Amendments

Chapter 11B
ACCESSIBILITY TO PUBLIC BUILDINGS, PUBLIC ACCOMMODATIONS, COMMERCIAL BUILDINGS AND PUBLICLY FUNDED HOUSING

No San Francisco Building Code Amendments

Chapter 11C
STANDARDS FOR CARD READERS AT GASOLINE FUEL-DISPENSING FACILITIES

No San Francisco Building Code Amendments

Add chapter as follows:

Chapter 11D
MANDATORY ACCESSIBILITY IMPROVEMENTS FOR BUILDINGS WITH A PLACE OF PUBLIC ACCOMMODATION

SECTION 1101D – SCOPE

Any building or portion of a building with a Place of Public Accommodation subject to the requirements of Chapter 11B of this Code is within the scope of this Chapter.

Exception: A building that was constructed under a building or site permit application filed on or after January 1, 2002.

A building constructed under the Building Code in effect on or after January 1, 2002 is presumed to be accessible to persons with disabilities and will be exempt from this Chapter 11D upon receipt by the Department of a written notice of exemption from the Owner or the Owner's authorized agent that provides a construction permit application number dated on or after January 1, 2002 and contact information for the Owner and/or Owner's authorized agent.

1101D.1. Compliance with Federal or State Laws. Nothing in this Chapter 11D is intended to relieve the Owner or the operator of a Place of Public Accommodation of their obligation to comply with the requirements of any Federal or State law, including but not limited to the Americans with Disabilities Act, or to modify or extend the time for compliance with any such law.

1101D.2. Contractual Obligations. Nothing in this Chapter 11D is intended to interfere with any contractual obligations between the Owner of a building within the scope of this Chapter and any lessee of space within the building.

(Added by Ord. 51-16, File No. 150732, App. 4/22/2016, Eff. 5/22/2016, Oper. 6/21/2016)

SECTION 1102D – DEFINITIONS

For the purposes of this Chapter 11D, the following definitions shall apply:

" *Accessible Entrance Route.* " An identifiable path of travel by means of which a Primary Entry may be approached, entered and exited, and which connects the Primary Entry with an exterior approach (including any adjacent sidewalks, streets and parking areas).

" *Building Official.* " The Director of the Department or the Director's designee.

" *California Construction-Related Accessibility Standards Compliance Act.* " Sections 55.51 through 55.53 of the California Civil Code as amended from time to time.

" *California Historical Building Code.* " Part 8 of Title 24, California Code of Regulations.

" *CASp Inspector.* " A person who has been certified by the State of California as a certified access specialist authorized to inspect a Place of Public Accommodation for compliance with construction-related accessibility standards.

" *Checklist for Alterations to Commercial Storefront for Accessibility.* " A Checklist developed by or with the input of City departments or agencies with review authority over the subject buildings.

" *Department.* " The Department of Building Inspection.

" *Design Professional.* " A "Registered Design Professional" as defined in Chapter 2 of the Building Code.

" *Disability Access Compliance Unit* " or " *Compliance Unit.* " The Unit within the Department established under Section 1112D of this Chapter.

" *Equivalent Facilitation.* " As defined in Chapter 2 of the Building Code.

" *Historic Resource.* " A building designated pursuant to Articles 10 and 11 of the Planning Code, listed on or determined eligible for listing on the California Register of Historic Resources or the National Register of Historic Places, or that is a 'qualified historical building' as defined in the California Historical Building Code.

" *Inspector.* " A CASp Inspector or a Design Professional approved by the Building Official as qualified to evaluate compliance with disability access requirements.

" *Owner.* " The owner of a building within the scope of this Chapter 11D.

" *Place of Public Accommodation.* " As defined in Section 55.52 of the California Construction-Related Accessibility Compliance Act and 42 USC Section 12181(7) of the Americans with Disabilities Act of 1990, as those Acts are amended from time to time.

" *Primary Entry.* " As defined in Chapter 2 of this Code, the principal entrance through which most people enter the building, as designated by the Building Official. If there are multiple commercial tenants or spaces, a building may have multiple Primary Entries.

" *Technically Infeasible.* " As defined in Chapter 2 of the Building Code.

" *Technical Infeasibility.* " A Code requirement is Technically Infeasible.

" *Unreasonable Hardship.* " As defined in Chapter 2 of the Building Code.

(Added by Ord. 51-16, File No. 150732, App. 4/22/2016, Eff. 5/22/2016, Oper. 6/21/2016)

SECTION 1103D – COMPLIANCE CATEGORIES

The Department shall assign each building within the scope of this Chapter 11D to one of the following four categories. If a building does not clearly fall within one of these categories, the Building Official shall assign it to the category he or she determines is the

most appropriate. The Building Official's decision is appealable to the Building Inspection Commission pursuant to Section 77.3(b) of the Administrative Code.

Category One: The Primary Entry or Entries and the Accessible Entrance Route(s) comply with Code requirements. A building qualifies under Category One if any of the following descriptions applies:

(a) A building or portion thereof was constructed or altered under a permit application filed prior to July 1, 1992 and all Primary Entries and Accessible Entrance Routes are in compliance with the requirements of the 1998 California Building Code.

(b) A building or portion thereof was constructed or altered under a permit application filed on or after July 1, and prior to January 1, 2002, all Primary Entries and Accessible Entrance Routes are in compliance with the requirements of the 1998 California Building Code or a later Building Code in effect at the time of any permit application for a tenant improvement or other alteration, and the Department gave final approval of the accessible entry work under the construction permit or any alteration permits.

(c) A building is eligible to use the California Historical Building Code, a permit application was filed on or after January 1,1995, all Primary Entries and Accessible Entrance Routes are in compliance with the California Historical Building Code in effect at the time of the permit application, and the Department gave final approval of the accessible entry work under the construction permit or any alteration permits.

Category Two: There are no steps to the Primary Entry or Entries and one or more elements of the Primary Entry or Entries or the Accessible Entrance Route(s) do not comply with Code requirements. A building qualifies under Category Two if any of the following descriptions applies:

(a) A building or portion thereof was constructed or altered under a permit application filed prior to July 1, 1992, the building has a Primary Entry or Entries with no steps, and one or more elements of the Primary Entry or Entries or the Accessible Entrance Route(s) are not in compliance with the requirements of the 1998 California Building Code.

(b) A building or portion thereof was constructed or altered on or after July 1, 1992 and prior to January l, 2002, the building has a Primary Entry or Entries with no steps, and one or more elements of the Primary Entry or Entries or the Accessible Entrance Route(s) are not in compliance with the requirements of the 1998 California Building Code or a later Building Code in effect at the time of any permit application for a tenant improvement or other alteration, or the Department did not give final approval of the accessible entry work under the construction permit or any alteration permit.

(c) A building is eligible to use the California Historical Building Code, a permit application was filed on or after January l, 1995, the Primary Entry or Entries has no steps, and one or more elements of the Primary Entry or Entries or the Accessible Entrance Route(s) are not in compliance with the California Historical Building Code in effect at the time of permit application, or the Department did not give final approval of the accessible entry work under a construction permit or any alteration permit.

Category Three: There is one step to the Primary Entry or Entries and one or more

elements of the Primary Entry or Entries or the Accessible Entrance Route(s) do not comply with Code requirements. A building qualifies under Category Three if the building or portion thereof was constructed or altered under a permit application filed prior to July 1, 1992, the Department gave final approval of the work under the permit, the building has a Primary Entry or Entries with one step and one or more elements of the Primary Entry or Entries or the Accessible Entrance Route(s) are not in compliance with the requirements of the 1998 California Building Code.

Category Four: The building has a Primary Entry or Entries with more than one step and one or more elements of the Primary Entry or Entries and/or the Accessible Entrance Route(s) do not comply with minimum Code requirements. A building qualifies under Category Four if the building or portion thereof was constructed or altered under a permit application filed prior to July 1, 1992, the building has a Primary Entry or Entries with more than one step, and one or more elements of the Primary Entry or Entries or the Accessible Entrance Route(s) are not in compliance with the requirements of the 1998 California Building Code, or the Department did not give final approval of the accessible entry work under the construction permit.

(Added by Ord. 51-16, File No. 150732, App. 4/22/2016, Eff. 5/22/2016, Oper. 6/21/2016)

SECTION 1104D – INSPECTION AND SUBMISSION OF PRIMARY ENTRY COMPLIANCE CHECKLIST

1104D.1. Category One Buildings. The Owner of a building classified in Section 1103D as Category One shall obtain an inspection of the elements on the Department's Category One Primary Entry Compliance Checklist by an Inspector. On or before the time for compliance specified in Section 1107D, the Owner shall submit to the Department's Disability Access Compliance Unit a copy of the Checklist completed and signed by the person who performed the inspection and including his or her business contact information and a professional stamp, CASp number, or California State License Bureau contractor's license number, whichever is applicable.

If any elements on the Checklist are found by the Inspector or licensed general contractor to be not in compliance with the standards for accessible entries set forth in the applicable California Building Code or California Historical Building Code, or the Department did not give final approval of the accessible entry work, the noncomplying elements shall be clearly specified in detail, the building shall be reassigned by the Building Official to the appropriate Category, and the Owner shall comply with all requirements of that Category. The Building Official's decision is appealable to the Building Inspection Commission pursuant to Section 77.3(b) of the Administrative Code.

1104D.2. Category Two Buildings. The Owner of a building classified in Section 1103D as Category Two shall obtain an inspection of the elements on the Department's Category Two Primary Entry Compliance Checklist by an Inspector. On or before the time for compliance specified in Section 1107D, the Owner shall submit to the Department's Disability Access Compliance Unit a copy of the Checklist completed and signed by the person who performed the inspection and including his or her business contact information and a professional stamp or CASp number.

Each element on the Checklist found by the Inspector to be not in compliance with the applicable standards for accessible entries set forth in the applicable Building Code or California Historical Building Code, including a failure to obtain final Department approval of the accessible entry work, shall be specified in detail and one of the following four options selected by the Owner as the method by which the Owner will address the Code deficiency within the time specified for compliance in Section 1107D:

(a) Option 1. The Owner shall submit to the Disability Access Compliance Unit:

(1) Plans showing how the non-complying element or elements will be brought into full compliance with the applicable standards for accessible entries set forth in either the California Building Code or the California Historical Building Code, and.

(2) If the Owner elects to use the California Historical Building Code, documentation showing that the building is qualified to use the California Historical Building Code.

The Owner must subsequently apply for and obtain a building permit to do the required work within the time specified for compliance in Section 1107D.

(b) Option 2. The Owner shall submit to the Disability Access Compliance Unit:

(1) Plans, drawings, or other documentation required by the Compliance Unit demonstrating that bringing the non-complying element or elements into full compliance with the applicable Code standards for accessible entries is Technically Infeasible, and

(2) Plans, drawings, a written explanation, or other documentation required by the Compliance Unit showing what Equivalent Facilitation will be provided.

The Owner must subsequently apply for and obtain a building permit to do the work required within the time specified for compliance in Section 1107D.

(c) Option 3. The Owner shall submit to the Disability Access Compliance Unit a Request for Approval of an Unreasonable Hardship form together with plans, drawings, a written explanation, or other documentation required by the Compliance Unit showing what Equivalent Facilitation will be provided. The Compliance Unit will review the request and either approve or deny it, and then forward the request and equivalency submittal information to the Access Appeals Commission for a hearing pursuant to Section 1110D and Section 105A.3.3 of this Code.

The Owner must subsequently apply for and obtain a building permit to do the work required within the time specified for compliance in Section 1107D.

(d) Option 4. The Owner shall submit to the Disability Access Compliance Unit a statement of intent to request a hearing by the Access Appeals Commission to review the matter pursuant to Section 1110D and Section 105A.3.3 of this Code.

The request for a hearing by the Access Appeals Commission shall be submitted pursuant to the procedures of Section 105A.3 of this Code and in sufficient time to obtain a decision prior to the other compliance timelines in Table 1107D.

1104D.3. Category Three Buildings. The Owner of a building classified in Section 1103D

as Category Three shall obtain an inspection of the elements on the Department's Category Three Primary Entry Compliance Checklist by an Inspector (as defined in Section 1102D). On or before the time for compliance specified in Section 1107D, the Owner shall submit to the Department's Disability Access Compliance Unit a copy of the Checklist completed and signed by the person who performed the inspection and including his or her business contact information and a professional stamp or CASp number.

Each element on the Checklist found by the Inspector to be not in compliance with the applicable standards for accessible entries set forth in the applicable California Building Code or California Historical Building Code shall be specified in detail and one of the options set forth in Section 1104D.2 (a) through (d) selected by the Owner as the method by which the Owner will address the Code deficiency within the time specified for compliance in Section 1107D.

1104D.4. Category Four Buildings. The Owner of a building classified in Section 1103D as Category Four shall obtain an inspection of the elements on the Department's Category Four Primary Entry Compliance Checklist by an Inspector. On or before the time for compliance specified in Section 1107D, the Owner shall submit to the Department's Disability Access Compliance Unit a copy of the Checklist completed and signed by the person who performed the inspection and including his or her business contact information and a professional stamp or CASp number.

Each element on the Checklist found by the Inspector to be not in compliance with the applicable standards for accessible entries set forth in the applicable California Building Code or California Historical Building Code shall be specified in detail and one of the options set forth in Section 1104D.2 (a) through (d) selected by the Owner as the method by which the Owner will address the Code deficiency within the time specified for compliance in Section 1107D.

(Added by Ord. 51-16, File No. 150732, App. 4/22/2016, Eff. 5/22/2016, Oper. 6/21/2016)

SECTION 1105D – EQUIVALENT FACILITATION; TECHNICAL INFEASIBILITY, OR UNREASONABLE HARDSHIP.

1105D.1. Equivalent Facilitation. The Department shall develop an Approved Barrier Removal Standard in consultation with the Access Appeals Commission, the Planning Department, and the Department of Public Works. The Disability Access Compliance Unit shall maintain the Approved Barrier Removal Standard and review any proposal for Equivalent Facilitation under this Chapter 11D for compliance with that Standard. Any proposal for Equivalent Facilitation that does not comply with the Approved Barrier Removal Standard must be approved by the Access Appeals Commission.

1105D.2. Technically Infeasible. A request for a finding that compliance is Technically Infeasible can be based upon either a structural or a non-structural condition.

(a) Structural Technical Infeasibilify. A structural Technical Infeasibility is an existing condition of the building where full compliance would require the removal or alteration of

a load-bearing structural element that is an essential part of the structural frame.

(b) Non-structural Technical Infeasibility. A non-structural Technical Infeasibility may include conditions where full compliance would require encroaching into the required egress width, interfering with pedestrian use of the sidewalk or a permanent easement, and similar conditions that do not impact the structural elements or frame. The Disability Access Compliance Unit shall compile a list of non-structural conditions that the Department would accept as supporting a request for a finding of Technical Infeasibility and provide other written guidance, and may require that a request based on a non-structural condition be ratified by the Access Appeals Commission pursuant to Section 105A.3.3 of this Code.

1105D.2.1. Acceptance of previously-granted determinations of Technical Infeasibility. Under the California Building Code, all findings of Technical Infeasibility must be documented by the Department and can only be made on a case-by-case basis. The Department will accept and record a previously-approved finding of Technical Infeasibility for a building within the scope of this Chapter 11D if: (1) the finding of Technical Infeasibility was approved by the Department and can be documented, (2) the finding of Technical Infeasibility is applicable to the elements covered by this Chapter 11D, and (3) an Inspector has submitted written documentation acceptable to the Department that all conditions and requirements of the Technical Infeasibility are unchanged and remain applicable.

1105D.3. Unreasonable Hardship. The Compliance Unit, in consultation with the Access Appeals Commission, shall develop and publish guidelines specifying the conditions under which an Unreasonable Hardship would be approved by the Department. All Unreasonable Hardships must be ratified by the Access Appeals Commission pursuant to Section 11B-202.4, Exception 8, and Section 1.9.1.5 of the California Building Code.

(Added by Ord. 51-16, File No. 150732, App. 4/22/2016, Eff. 5/22/2016, Oper. 6/21/2016)

SECTION 1106D – BUILDING PERMIT REQUIRED; INSPECTION AND COMPLETION OF WORK; VALUATION APPLIED TO FUTURE PROJECTS

1106D.1. Building Permit Required. A building permit is required to make any and all modifications to a building either mandated or authorized by this Chapter 11D. All work required by this Chapter 11D shall be considered by the Department to be barrier removal and no additional path of travel upgrade shall be required. Only those elements that are actually altered will be required to comply with the current requirements of this Code.

1106D.1.1. Historic Resources.

(a) For a building considered to be a Historic Resource, the plans submitted with the building permit application shall be prepared in conjunction with a Design Professional and in compliance with the California Historical Building Code, requirements of the San Francisco Planning Department, and guidelines developed and published by the

Compliance Unit.

(b) As required by Articles 10 and 11 of the Planning Code, a permit application for a Historic Resource designated pursuant to Article 10 or 11 of the Planning Code must be approved by the Historic Preservation Commission unless delegated for review and approval without a hearing to Planning Department staff.

1106D.2. Alteration Work That May Be Included in the Permit Application. The only work that may be included in the permit required by Section 1106D.1 is: (a) the work to a Primary Entry or Accessible Entrance Route mandated by Section 1104D or (b) any voluntary disability access improvements authorized by Section 1109D.

1106D.3. Inspection of Work. All work completed by permit under Option 1 of Section 1104D.2 for Category Two, Category Three, and Category Four buildings shall be inspected by the Department's field inspector that is assigned to that district. If the work complies with requirements of this Chapter 11D, the inspector shall issue to the Owner a Certificate of Final Completion stipulating that the work complies with the requirements and shall provide a copy of the Certificate of Final Completion to the Disability Access Compliance Unit. Upon request, the Owner may obtain a final inspection and approval by a Department inspector who is certified as a CASp Inspector; the inspection fee set forth in Table IA-D of Section 110[1] of this Code shall apply.

All work completed by permit under Options 3 and 4 of Section 1104D.2 for Category Two, Category Three, and Category Four buildings shall be inspected by a Department CASp Inspector. If the work complies with requirements of this Chapter 11D, the inspector shall issue to the Owner a Certificate of Final Completion stipulating that the work complies with the requirements of this Chapter and shall list his or her CASp number where applicable on both the Certificate of Final Completion and the completed job card.

1106D.4. Completion of Work; Certificate of Final Completion. Notwithstanding any other provision of this Code, all work mandated by this Chapter 11D must be completed within the time periods specified in Section 106A.4.4 of this Code for Permit Expiration unless an extension of time is granted pursuant to Section 1108D. Any Certificate issued by the Department upon final completion of the work required by this Chapter 11D shall state that compliance is with Chapter 11D of this Code and not with the requirements of either the Americans with Disability Act or the California Building Code.

1106D.5. Valuation Applied to Future Projects. As authorized by the Building Code, the valuation of both the mandatory and the voluntary disability access improvements performed under this Chapter 11D may be used to comply with path of travel upgrade requirements in Building Code Section 11B-202.4 Exception #8 of this Code for any future project within the same building of portion of a building for a period of time not to exceed four years from the completion date of the work; provided, however, that only the valuation of the work described in 1106D.2(a) or (b) shall be allowed for this purpose. In order to use the valuation of voluntary disability improvements for this purpose, the Owner must follow the recommended order of priority for making accessibility improvements set forth in Section 11B-202.4 of this Code.

(Added by Ord. 51-16, File No. 150732, App. 4/22/2016, Eff. 5/22/2016, Oper. 6/21/2016)

SECTION 1107D – COMPLIANCE SCHEDULE; OPTION TO COMPLY WITH CURRENT CODE REQUIREMENTS

The time for compliance with the requirements of this Chapter 11D are set forth in the following Table 1107D. The Owner of a building within the scope of this Chapter must submit all required forms, documents and permit applications to the Department prior to the deadlines set forth in Table 1107D but may comply with the requirements of this Chapter 11D, or elect to comply with the requirements and procedures of the Building Code then in effect, at any time prior to the deadlines set forth in Table 1107D.

TABLE 1107D
COMPLIANCE SCHEDULE[1]

	Submit compliance Checklist and specify compliance Option	File application for required building permit(s)	Obtain required building permit(s) [2]
Category One Buildings	12	N/A	N/A
Category Two Buildings	12	15	27
Category Three Buildings	24	27	39
Category Four Buildings	30	33	45

1 Unless otherwise specified, time period is in months measured from the effective date of this Chapter 11D.

2 Pursuant to Section 1106D.4, all mandated work must be completed within the time periods specified in Section 106A.4.4 of this Code for Permit Expiration unless an extension of time of time is granted pursuant to Section 1108D

(Added by Ord. 51-16, File No. 150732, App. 4/22/2016, Eff. 5/22/2016, Oper. 6/21/2016)

SECTION 1108D – EXTENSIONS OF TIME

(a) For good cause shown, the Building Official may grant one extension of time for up to six months from the compliance timelines in Table 1107D. For good cause shown, one or more additional extensions of time may be granted by the Access Appeals Commission pursuant to Section 1110D; provided, however, that in no event shall the Commission extend the time to complete the mandatory work required by this Chapter 11D beyond six years from the effective date of this Chapter 11D. The Commission's decision shall be

final.

(b) A written request for an extension of time shall be submitted to the Department or to the Access Appeals Commission prior to the time for compliance.

(c) For purposes of this Chapter 11D, good cause may include but is not limited to:

(1) The pendency of a request for a finding of Equivalent Facilitation or Technical Infeasibility;

(2) The desirability of coordinating the mandatory work required by this Chapter 11D with voluntary disability access improvements;

(3) Financial hardship;

(4) A legal hardship such as an existing lease; or

(5) A undue procedural delay by the Department or another reviewing City agency.

(Added by Ord. 51-16, File No. 150732, App. 4/22/2016, Eff. 5/22/2016, Oper. 6/21/2016)

SECTION 1109D – VOLUNTARY DISABILITY ACCESS IMPROVEMENTS

In addition to the mandatory requirements of this Chapter 11D, the Owner may elect to make additional corrections to the building or a portion thereof to comply with other State or Federal disability access requirements.

(Added by Ord. 51-16, File No. 150732, App. 4/22/2016, Eff. 5/22/2016, Oper. 6/21/2016)

SECTION 1110D – APPEAL PROCEDURE

Any procedure provided under this Code to appeal accessibility issues is available in order to achieve compliance with this Chapter 11D. In addition, appeals to the Access Appeals Commission may be made in accordance with the provisions of this Chapter 11D and 105A.3 of this Code.

(Added by Ord. 51-16, File No. 150732, App. 4/22/2016, Eff. 5/22/2016, Oper. 6/21/2016)

SECTION 1111D – ENFORCEMENT

Whenever the Owner of a building within the scope of this Chapter 11D fails to undertake or complete any action required by this Chapter within the time for compliance set forth in Table 1107D, the Owner shall be considered to be in violation of this Code and the Building Official is authorized to abate the violation in accordance with Section 102A of this Code.

(Added by Ord. 51-16, File No. 150732, App. 4/22/2016, Eff. 5/22/2016, Oper. 6/21/2016)

SECTION 1112D – DISABILITY ACCESS COMPLIANCE UNIT

The Building Official shall establish within the Department a Disability Access

Compliance Unit to enforce this Chapter 11D and to perform such other duties as the Building Official shall require. The Unit shall have at least one CASp Inspector from the Department and such other departmental employees as the Building Official deems appropriate. The Compliance Unit shall consult and coordinate with other City agencies with review authority over the permits necessary to comply with the requirements of this Chapter, including but not limited to the Planning Department and Department of Public Works, and any other City agencies that the Building Official determines are necessary or desirable to achieve the purposes of this Chapter.

The Compliance Unit shall track and maintain records; coordinate review of checklists, documents, and permits; provide information to the owners of buildings subject to this Chapter, tenants of said buildings, and members of the public; provide guidance, training and assistance to the Department's plan review staff and field inspectors; develop the informational material described in Section 1113D; and provide such progress reports on the effectiveness of this Chapter as the Compliance Unit deems appropriate or as the Building Official or the Access Appeals Commission may require.

(Added by Ord. 51-16, File No. 150732, App. 4/22/2016, Eff. 5/22/2016, Oper. 6/21/2016)

SECTION 1113D – COORDINATION WITH OTHER CITY AGENCIES; REPORT TO THE BOARD OF SUPERVISORS

1113D.1. Coordination with Other Agencies. The Department shall coordinate with the Planning Department, the Department of Public Works, and other City departments with review authority over the accessibility improvements mandated or authorized by this Chapter 11D, as well as with the Office of Small Business, the Mayor's Office on Disability, and other appropriate City agencies, to develop and implement (1) outreach tools, (2) pre-screening procedures, (3) methods to streamline the process, (4) proposed Code revisions, and (5) administrative bulletins, brochures, checklists, and guidelines or other documents to implement the purpose and objectives of this Chapter. The Checklist for Alterations to Commercial Storefront for Accessibility in existence on the effective date of this Chapter 11D, as amended from time to time, and other guidance documents shall be used to review and approve the disability access improvements mandated or authorized by this Chapter 11D.

1113D.2. Report to the Board of Supervisors. Within one year from the effective date of this Chapter 11D, and following consultation and coordination with other appropriate City departments and agencies, the Department shall submit a report in writing to the Board of Supervisors concerning the effectiveness of this Chapter and including recommendations, if any, for amendments to this Chapter. A progress report shall be submitted to the Board of Supervisors once a year thereafter until completion of this Chapter's disability access improvement program.

(Added by Ord. 51-16, File No. 150732, App. 4/22/2016, Eff. 5/22/2016, Oper. 6/21/2016)

SECTION 1114D – NOTICE

The Department shall post on its website the requirements of this Chapter 11D. The Department shall also prepare any administrative bulletins, brochures, or other materials

that the Building Official determines are necessary or desirable to notify property owners and tenants about the requirements of this Chapter and shall coordinate with the Office of Small Business and, in the Building Official's discretion, other City departments concerning appropriate methods for providing notice about the requirements.

(Added by Ord. 51-16, File No. 150732, App. 4/22/2016, Eff. 5/22/2016, Oper. 6/21/2016)

SECTION 1115D – ADMINISTRATIVE FEE

In addition to any other permit fees that may apply, the Department shall charge the Owner of each property within the scope of this Chapter 11D an administrative fee to compensate the Department for the cost of the services necessary to implement and enforce Chapter 11D's disability access improvement program. The administrative fee shall be the Standard Hourly Rate for Administration set forth in Table 1A-D of this Code. The administrative fee is payable within 30 days of the Department's notice that payment is due.

(Added by Ord. 51-16, File No. 150732, App. 4/22/2016, Eff. 5/22/2016, Oper. 6/21/2016)

Chapter 12
INTERIOR ENVIRONMENT

SECTION 1203 – VENTILATION

1203.5 Add a second paragraph and a third paragraph as follows:

In other than high-rise buildings, public corridors, public hallways and other public spaces having openings into adjoining dwelling units, guest rooms, or congregate residences within R-1 and R-2 Occupancies, shall be provided with natural ventilation by means of openable exterior openings with an area of not less than 1/25 of the floor area of such rooms or spaces with a minimum of 4 square feet (0.37 m^2).

In lieu of required exterior openings for natural ventilation, a mechanical ventilating system may be provided. Such system shall be capable of providing two air changes per hour in public corridors, public hallways and other public spaces having openings into adjoining dwelling units, guest rooms, or congregate residences with R-2 occupancies, with a minimum of 7-1/2 cubic feet per minute (3-1/2 L/s) of outside air per occupant during such time as the building is occupied.

1203.6 Add a second paragraph as follows:

For all buildings containing any sensitive land use located within the Air Pollutant Exposure Zone, as determined by the Director of Public Health pursuant to Article 38 of the San Francisco Health Code, that are:

(a) **Newly constructed;**

(b) **Undergoing a "Major Alteration to Existing Building" as defined by the San Francisco Green Building Code; or**

(c) **Applying for a San Francisco Planning Department-permitted Change of Use, such buildings shall incorporate an enhanced ventilation system designed and constructed to be in compliance with San Francisco Health Code Article 38.**

(Amended by Ord. 224-14, File No. 140806, App. 11/7/2014, Eff. 12/7/2014)

SECTION 1205 – LIGHTING

1205.1 Add an exception after the first paragraph:

Exception: Habitable rooms (excluding kitchens, home offices and media rooms) within a dwelling unit or congregate residence shall be provided with natural light by means of exterior glazed openings in accordance with Section 1205.2.

1205.2.2 Add the following paragraphs after the Exceptions:

The depth of all structural projections, including balconies, decks, porches, rooms or roofs, shall not exceed 9 feet (2.134 m) when extending over exterior wall openings that provide required natural light or natural ventilation for spaces intended for human occupancy.

The height of a balcony, deck or porch shall not be less than 7 feet (2.134 m) measured from the floor to the lowest projection above.

1205.4 Revise this section as follows:

1205.4 Stairway illumination. Stairways within dwelling units and exterior stairways serving a dwelling unit shall have an illumination level on tread runs **and landings** of not less than 1 foot-candle (11 lux). Stairs in other occupancies shall be governed by Chapter 10.
Exception: **An artificial light source is not required at the top and bottom landing, provided an artificial light source is located directly over each stairway section.**

SECTION 1207 – SOUND TRANSMISSION

1207 Add the following sections:

1207.6 Definitions. The following definitions apply to Sections 1207.4 through 1207.9 of this Code.

***COMMUNITY NOISE EQUIVALENT LEVEL (CNEL)* is a metric similar to the Ldn, except that a 5 dB adjustment is added to the equivalent continuous sound exposure level for evening hours (7 p.m. to 10 p.m.) in addition to the 10 dB nighttime adjustment used in the Ldn.**

***DAY-NIGHT AVERAGE SOUND LEVEL (Ldn)* is the A-weighted equivalent continuous sound exposure level for a 24-hour period with a 10 dB adjustment added to sound levels occurring during nighttime hours (10 p.m. to 7 a.m.).**

NORMALIZED A-WEIGHTED SOUND LEVEL DIFFERENCE (Dn) means for a specified source room sound spectrum, the difference, in decibels, between the average sound levels produced in two rooms after adjustment to the expected acoustical conditions when the receiving room under test is normally furnished.

1207.7 Exterior Sound Transmission Control.

1207.7.1 Application. Residential structures located in noise critical areas, such as in proximity to highways, county roads, city streets, railroads, rapid transit lines, airports, nighttime entertainment venues, or industrial areas, shall be designed to prevent the intrusion of exterior noises beyond levels prescribed by the Municipal Code. Proper design to accomplish this goal shall include, but not be limited to, orientation of the residential structure, setbacks, shielding, and sound insulation of the building.

1207.7.2 Allowable interior noise levels. Interior noise levels attributable to exterior sources shall not exceed 45 dB in any habitable room. The noise metric shall be either the day-night average sound level (Ldn) or the community noise equivalent level (CNEL), whichever results in a higher measurement of noise level.

1207.7.3 Other noise sources. Residential structures to be located where the Ldn or CNEL exceeds 60 dB shall require an acoustical analysis showing that the proposed design will limit exterior noise to the prescribed allowable interior level. The Planning Department's map titled Areas Potentially Requiring Noise Insulations, and similar maps and guidance produced by the Planning Department, shall be used where possible to identify sites with noise levels potentially greater than 60 dB.

1207.8 Compliance.

(a) Evidence of compliance with Section 1207.7 shall consist of submittal of an acoustical analysis report, prepared under the supervision of a person experienced in the field of acoustical engineering, with the application for a building permit. The report shall show topographical relationships of noise sources and dwelling sites, identification of noise sources and their characteristics, predicted noise spectra and levels at the exterior of the proposed dwelling structure considering present and future land usage, the basis or bases for the prediction (measured or obtained from published data), noise attenuation measures to be applied and an analysis of the noise insulation effectiveness of the proposed construction showing that the prescribed interior noise level requirements are met.

(b) If interior allowable noise levels are met by requiring that windows be unopenable or closed the design for the structure must also specify a ventilation or air-conditioning system to provide a habitable interior environment. The ventilation system must not compromise the dwelling unit or guest room noise reduction.

1207.9 Field Testing.

(a) When inspection indicates that the construction is not in accordance with the approved design, or that the noise reduction is compromised due to sound leaks or flanking paths, field testing may be required. A test report showing compliance or noncompliance with prescribed interior allowable levels shall be submitted to the building official.

(b) Field measurements of outdoor sound levels shall generally follow the guidelines prepared by the American Society for Testing and Materials (ASTM) in ASTM E 1014.

(c) Field measurements of the A-weighted airborne sound insulation of buildings from exterior sources shall generally follow the guidelines prepared by the American Society for Testing and Materials (ASTM) in ASTM E 966.

(d) For the purpose of this Section ~~1207.7,~~[1] 1207.9, sound level differences measured in unoccupied units shall be normalized to a receiving room reverberation time of one-half second. Sound level differences measured in occupied units shall not be normalized to a standard reverberation time.

1207.10 The Department of Building Inspection shall consult with the Planning Department to ensure that notice to sponsors of residential development projects affected by Sections 1207.6 through 1207.9 are provided with notice of the requirements of this Section as soon as practicable in the project approval process.

(Amended by Ord. 70-15, File No. 141298, App. 5/21/2015, Eff. 6/20/2015)

SECTION 1208 – INTERIOR SPACE DIMENSIONS

1208.4 Revise paragraph 1 this section and add paragraphs 5 and 6 of this section as follows:

1208.4. Efficiency dwelling units. ~~An efficiency living unit shall conform to the requirements of the code except as modified herein:~~ **Efficiency dwelling units shall comply with the following:**

1. The unit shall **be occupied by no more than two persons and** have a living room of not less than **150** square feet of floor area. **An additional 100 square feet (9.3 m^2) of floor area shall be provided for each occupant of such unit in excess of two.**
2. The unit shall be provided with a separate closet.
3. The unit shall be provided with a kitchen sink, cooking appliance and refrigeration facilities, each having a clear working space of not less than 30 inches (762 mm) in front. Light and ventilation conforming to this code shall be provided.
4. The unit shall be provided with a separate bathroom containing a water closet, lavatory and bathtub or shower.
5. **The total area of the unit shall be no less than 220 square feet, which area shall be measured from the inside perimeter of the exterior walls of the unit and shall include closets, bathrooms, kitchen, living, and sleeping areas.**

6. **Subsections 1 - 5 apply only to new construction of a structure or building. For purposes of the preceding sentence, new construction shall mean the creation of an entirely new structure or building and shall not apply to improvement, renovation, rehabilitation, or any other change to an existing structure or building. Existing buildings or structures are subject only to Subsections 1 - 4 except that for purposes of Subsection 1 the unit shall have a living room of not less than 220 square feet (20.4 m^2) of floor area for up to two occupants.**

Chapter 13
ENERGY EFFICIENCY

No San Francisco Building Code Amendments

Add chapters as follows:

Chapter 13A
COMMERCIAL WATER CONSERVATION

SECTION 1301A – TITLE

This chapter shall be known as the "Commercial Water Conservation Ordinance."

SECTION 1302A – INTENT

It is the intent of this chapter to conserve existing water supplies by managing the overall demand for water in commercial buildings, including tourist hotels and motels, by requiring the installation of water conservation devices in commercial buildings upon the occurrence of specific events and in any event no later than January 1, 2017.

SECTION 1303A – DEFINITIONS

For the purpose of this chapter, certain terms are defined as follows:

ACCESSIBLE means there is sufficient space in which to install the specified water and energy conservation measure without significant alteration to the structure. For ducts, plenums or pipes, "accessible" shall mean all ductwork, plenums or pipes located in mechanical rooms, on roofs and around all air handling units. In addition, pipes located above movable ceiling panels shall be considered accessible, but not ducts or plenums.

ACCESSIBLE ATTIC SPACE means a space between a ceiling joist and roof rafter where the vertical clear height from the top of the bottom chord of the truss or ceiling joist to the underside of the roof sheeting at the roof ridge is greater than 18 inches (957 mm).

BUILDING OCCUPANCY means OCCUPANCY as defined in Chapter 3 of this code and shall also, where practicable, include the primary business activity of the property as classified by Standard Industrial Classification (SIC).

BUILDING TYPE means the type of building construction, as defined in Chapter 6 of this code, and shall take into consideration whether the building is a high-rise building as defined by Section 403 of this code.

COMMERCIAL BUILDING means any privately owned building except those residential buildings and portions of mixed residential- commercial buildings that are subject to the energy or water conservation requirements of Chapter 12 or Chapter 12A of the San Francisco Housing Code (Residential Energy Conservation Ordinance and Residential Water Conservation Ordinance).

COST-EFFECTIVE means having a simple economic payback that does not exceed four years or the expected life of an energy conservation measure, whichever is shorter.

ESTABLISHED CONTRACTOR'S COST means the contractor's fee, including labor and material, plus the engineer's fee to do the required work, provided that the engineer's fees do not exceed the schedule of fees provided by the Building Official.

PERMIT APPLICANT means the person listed on the building permit application as the owner or lessee of the building.

QUALIFIED INSPECTOR means an inspector defined in Section 1314A, who is authorized to perform a water conservation inspection.

QUALIFIED PROFESSIONAL means a person regularly engaged in the field of making repairs, adjustments and inspection of energy-using equipment contained in HVAC, lighting or service hot water systems.

SERVICE HOT WATER means the supply of hot water for domestic or commercial purposes other than comfort heating.

SIMPLE ECONOMIC PAYBACK means the time needed to recover a conservation investment on the basis of expected energy savings at current energy costs. Simple economic payback is expressed in years, and is calculated by dividing the established contractor's cost of a conservation measure by the estimated dollar savings in the first year. Available tax credits, incentives and future energy costs are not considered in the calculation.

WATER CONSERVATION INSPECTION means inspection of a commercial building for compliance with the requirements of this chapter.

SECTION 1304A – RULES AND GUIDELINES

1304A.1 Adopt rules. The Building Official, in cooperation with the General Manager of the Public Utilities Commission and other advisors as the Building Official may deem appropriate,

shall adopt reasonable rules and guidelines implementing the provisions and intent of this chapter and shall make them available to the public along with the informational brochure described in Section 1307A. The Building Official, in cooperation with the General Manager of the Public Utilities Commission, may amend these rules and guidelines from time to time after considering public input.

1304A.2 Inspection procedures. The Building Official shall include coverage of this chapter's requirements in the Water Inspection Procedures established by the Department.

SECTION 1305A – CIVIL REMEDIES

1305A.1 Abatement. A commercial building shall constitute a nuisance under the terms of Section 102A of this code when the installation of a water conservation measure in a commercial building is required pursuant to this chapter and the water conservation measure has not been installed.

The nuisance shall be abated by civil action pursuant to procedures set forth in Section 102A of this code for unsafe buildings; provided, however, that in no event shall any violation constitute a misdemeanor.

SECTION 1306A – REQUIREMENTS

1306A.1 Building additions. For building additions where the sum of concurrent building permits by the same permit applicant would increase the floor area of the space in a building by more than ten percent, the permit applicant shall obtain a valid water conservation inspection and shall comply with the applicable water conservation measures required by this chapter as a condition for issuance of a Certificate of Final Completion and Occupancy by the Department upon completion of the addition.

1306A.1.1 Scope. This subsection shall apply to the entire building.

1306A.2 Building alterations and improvements.

1306A.2.1 For alterations or improvements where the total construction cost estimated in the building permit is greater than $150,000, as a condition for issuance of a Certificate of Final Completion and Occupancy, or final permit sign off, by the Department upon completion of the alterations or improvements, the permit applicant shall obtain a valid water conservation inspection and shall install the applicable water conservation devices required by this chapter that serve the specific area of alteration or improvement.

1306A.2.2 Notwithstanding Section 1306A.2.1, for any alterations or improvements to a room containing any of the water conservation devices identified in Section 1313A, as a condition for issuance of a Certificate of Final Completion and Occupancy or final permit sign off by the Department upon completion of the alterations or improvements, the permit applicant shall install the applicable water conservation devices required by this chapter in that room.

1306A.3 On or before January 1, 2017, all commercial buildings shall be in compliance with this chapter, and the owner or the owner's authorized representative shall cause a water conservation inspection to be completed, and shall have a certificate of compliance on file with the Department

for the entire building, or the entire portion of the mixed residential and commercial building that is subject to the required water compliance measures identified in Section 1313A.

SECTION 1307A – INFORMATIONAL BROCHURE

1307A.1 The Department shall make available to the public an informational brochure specifying the water conservation requirements.

SECTION 1308A – POSTPONEMENTS OF REQUIREMENTS

1308A.1 Postponement for demolition. The duty of an owner or permit applicant to comply with inspection and water conservation requirements applicable to any portion of a building subject to this chapter shall be postponed for one year from the date of issuance of a demolition permit for said building. If the building is demolished and a certificate of completion is issued by the Department before the end of the one-year postponement, the requirements of this chapter shall not apply. If the building is not demolished after the expiration of one year, the provisions of this chapter shall apply, subject to appeal, even though the demolition permit is still in effect or a new demolition permit has been issued.

SECTION 1309A – EARLY COMPLIANCE WITH WATER CONSERVATION MEASURES

1309A.1 Early compliance. To encourage early compliance with the requirements of this chapter, compliance pursuant to Section 1311A may be completed at any time before compliance would otherwise be required. In the event of early compliance, a water conservation inspection shall be completed and a certificate of compliance shall be filed with the Department in accordance with Section 1311A.

SECTION 1310A – WATER CONSERVATION INSPECTIONS

1310A.1 Inspections. A water conservation inspection which satisfies the requirements of this chapter shall be performed as required by this chapter.

SECTION 1311A – PROOF OF COMPLIANCE WITH WATER CONSERVATION MEASURES

1311A.1 Inspection form. The Department shall provide standardized forms, that may be paper and/or electronic suitable for conducting a valid water conservation inspection and certifying compliance with the requirements of this chapter. The inspection form shall be completed and

signed by a qualified inspector, furnished to the permit applicant, building owner or the owner's authorized representative, and submitted to the Department in accordance with this Section.

1311A.2 Certificate of compliance. When all of the water conservation requirements have been met, a certificate of compliance shall be signed and submitted to the Department.

1311A.3 Public records. Water conservation inspection results and certificates of compliance shall be public information, shall be available for inspection by any interested person during regular business hours at the Department, and may be made available electronically via the internet.

1311A.4 Fees. Reasonable fees may be required to pay for, but not exceed, the costs of implementing this chapter. Such fees shall be established by the Board of Supervisors upon recommendation of the Director of the Department and shall include:

1. The cost of inspections performed by the Department;
2. The cost of the appeal process and the request for exemption process;
3. The cost of filing and processing documents at the Department;
4. The cost of printing forms and informational brochures by the Department;
5. Other expenses incurred by the City and County of San Francisco in implementing this Chapter.

1311A.4.1 Fee schedule. See Building Code Section 110A, Table 1A-N for the applicable fees, once established.

1311A.4.2 Fee review. The Director of the Department of Building Inspection shall cause an annual report of fees to be made and filed with the Controller as set forth in Section 3.17-2 of the San Francisco Administrative Code. The Controller shall review the report and file it with the Board of Supervisors along with a proposed ordinance readjusting the fee rates as necessary.

SECTION 1312A – APPEALS FROM RESULTS OF A WATER CONSERVATION INSPECTION OR REQUEST FOR EXEMPTION

1312A.1 Notice of appeal. Any person with an interest in the property subject to a water conservation inspection who contests the determination of a qualified inspector regarding required water conservation measures may appeal said decision to the Director within ten working days from the date the completed inspection form was filed with the Department. The notice of appeal shall state, clearly and concisely, the grounds upon which the appeal is based. The burden of proof shall be on the applicant to demonstrate that the water conservation measure is not required under this chapter. The determination of the Director may be appealed to the Building Inspection Commission pursuant to the appeal procedures established in the Administrative Code Chapter 77.

1312A.2 Exemptions. Any person with an interest in the property subject to a water conservation inspection who claims an exemption pursuant to Section 1313A.3 and 1313A.4 of this chapter may request a determination of exemption from the Director by filing the request and stating the basis for the claim. The burden of proof shall be on the applicant to demonstrate the qualifications for the exemption. The determination of the Director may be appealed to the Building Inspection Commission pursuant to the appeal procedures established in the Administrative Code Chapter 77. Any appeal or request for exemption to the Director pursuant to this Section shall be accompanied by payment of a filing fee, pursuant to Section 1216 of the San Francisco Housing Code.

SECTION 1313A – REQUIRED WATER CONSERVATION MEASURES

The following water conservation measures are required for commercial buildings:

1313A.1 Showerheads. Replace all showerheads having a maximum flow rate exceeding 2.5 gallons (9.46 liters) per minute, with showerheads not exceeding the maximum flow rate established by the California Energy Commission, as set forth in the Appliance Efficiency Regulations, California Code of Regulations, Title 20, Sections 1601 to 1608, as it may be amended. Showers shall have no more than one showerhead per valve. For purposes of this subsection, the term "showerheads" includes rain heads, rain tiles, or any other fitting that transmits water for purposes of showering.

1313A.2 Faucet aerators. Replace all faucets and faucet aerators having a maximum flow rate exceeding 2.2 gallons per minute at a water pressure of 60 pounds per square inch, with plumbing fittings not exceeding the maximum flow rate established by the California Energy Commission, as set forth in the Appliance Efficiency Regulations, California Code of Regulations, Title 20, Sections 1601 to 1608, as it may be amended. Health-care facilities that are required by this chapter to install faucet aerators may satisfy that requirement by installing other flow restricting devices, such as laminar flow control devices.

1313A.3 Water closets. Replace all water closets that have a rated water consumption exceeding 1.6 gallons per flush with fixtures not exceeding the rated maximum water consumption established in the San Francisco Plumbing Code Chapter 4, Section 402.2, as it may be amended. An owner of a commercial building may request an exemption from replacing a water closet in the building if the replacement would detract from the historical integrity of the building, as determined by the Director of the Department of Building Inspection pursuant to the California Historic Building Code and Section 1312A.2.

1313A.4 Urinals. Replace all urinals that have a flow rate exceeding one gallon per flush with fixtures not exceeding the maximum flow rate established in the San Francisco Plumbing Code, Section 402.3, as it may be amended. An owner of a commercial building may request an exemption from replacing a urinal in the building if the replacement would detract from the historical integrity of the building, as determined by the Director of the Department of Building Inspection pursuant to the California Historical Building Code and Section 1312A.2.

1313A.5 Leak repair. All water leaks shall be located and repaired. To determine the existence of leaks, the following is required.

1. Visual inspection or water meter registration. If water meter registration is used, compliance is achieved if there is no meter movement for ten minutes while all fixtures are shut off.

2. All tank type water closets shall be tested with leak detector tablets or dye to detect slow valve leaks and all flushometer type fixtures shall be visually checked for proper operation with respect to timing and leaks.

SECTION 1314A – WATER CONSERVATION INSPECTIONS

1314A.1 Inspections. Inspections to determine compliance with the water conservation requirements of this chapter may be conducted by one of the following:

1. An authorized inspector of the Department;

2. A private inspector authorized by the Building Official pursuant to established rules and guidelines;

3. A private inspector hired by the Department, or Public Utilities Commission, on a contractual basis under terms and fees to be recommended by the Departments and established by the Board of Supervisors.

1314A.2 Qualified inspector duties. The duties of a qualified inspector shall be as follows:

1. To inspect portions of a building that are subject to this chapter to determine whether the water conservation standards specified in Section 1313A have been met and, if met, to sign a certificate of compliance, pursuant to Section 1311A, and to furnish it to the permit applicant, building owner or owner's agent;

2. To record on an official inspection form, pursuant to Section 1311A, all measures required by this chapter for which the building is in noncompliance, and to sign the inspection form and furnish it to the permit applicant, building owner or owner's agent.

1314A.3 Private water inspectors. Private inspectors shall be required to demonstrate financial responsibility by being insured and / or bonded in amounts to be determined by the Building Official.

1314A.4 Conflict of interest. No authorized inspector may conduct a water inspection on any building in which that inspector has a financial interest. For the purposes of this section, an inspector shall be deemed to have a financial interest in a building if the inspector:

1. Is an owner of the building or the property upon which the building is located in full or in part;

2. Is a full- or part-time employee of the building or its owners;

3. Is regularly placed on the building staff by a company that provides building engineering, operations and maintenance, or other building services to the property.

1314A.5 Inspector as employee. No inspector may approve a certificate of water conservation compliance for a building where that inspector is an employee or officer of a company that performed construction or repair work required by this chapter.

1314A.6 Limitation. Water conservation inspections are intended to enforce the provisions of this chapter only, and are not intended to determine compliance or noncompliance with any other portions of this code.

Add the chapter as follows:

Chapter 13B
CONSTRUCTION AND DEMOLITION DEBRIS RECOVERY PROGRAM

SECTION 1301B – TITLE

This chapter shall be known as the "Construction and Demolition Debris Recovery Program."

SECTION 1302B – RECOVERY OF CONSTRUCTION AND DEMOLITION DEBRIS

Under the requirements set forth herein and in Chapter 14 of the Environment Code, all construction and demolition debris in amounts of one cubic yard or greater generated in the course of a construction or demolition project must be transported off the site by a registered transporter, unless transported by the owner of the site, and handled, processed and otherwise managed by a registered facility for recovery of the materials. All persons subject to these requirements, including an applicant for any building or demolition permit shall comply with the requirements for construction and demolition debris recovery set forth in Chapter 14 of the Environment Code.

SECTION 1303B – DEFINITIONS

"Construction and demolition debris" shall mean building materials and solid waste generated from construction and demolition activities, including, but not limited to, fully-cured asphalt, concrete, brick, rock, soil, lumber, gypsum wallboard, cardboard and other associated packaging, roofing material, ceramic tile, carpeting, fixtures, plastic pipe, metals, tree stumps, and other vegetative matter resulting from land clearing and landscaping for construction, deconstruction, demolition or land developments. This term does not include refuse regulated under the 1932 Refuse Collection and Disposal Initiative Ordinance or sections of the Municipal Code that implement the provisions of that ordinance; materials from the public right-of-way; or, unless specified in Chapter 14 of the Environment Code, materials source separated for reuse or recycling. Hazardous waste, as defined in California Health and Safety Code section 25100 et seq., as amended, is not Construction and Demolition Debris for purposes of this Chapter.

"Registered Transporter" or "Registered Facility" shall mean a person who holds a valid registration issued by the Director of the Department of the Environment pursuant to Chapter 14 of the Environment Code. "Transporter" does not include a person that owns and operates only vehicles with no more than two axles and no more than two tires per axle.

SECTION 1304B – PERMIT CONDITION

The provisions of Chapter 14 of the Environment Code and any approvals or conditions imposed in writing by the Department of the Environment are conditions of the permit issued by the Department under Section 106A.1, and a violation of Chapter 14 or such approvals or conditions shall be deemed non-compliance with the permit.

SECTION 1305B – PERMIT NOTIFICATION

Permit application materials shall bear notice of and reference to the above requirements and the owner's responsibility for compliance with such requirements.

Add the chapter as follows:

Chapter 13C
[RESERVED]

Note: For Green Building Requirements see the San Francisco Green Building Code.

Add the chapter as follows:

Chapter 13D
COMMERCIAL LIGHTING EFFICIENCY ORDINANCE

The City and County of San Francisco adopts the following Chapter 13D for the purpose of reducing public demand for electricity and the associated detriment to the environment of energy production and delivery by requiring commercial buildings to install or adopt more energy efficient lighting measures.

SECTION 1301D – TITLE

This Chapter shall be known as the "Commercial Lighting Efficiency Ordinance."

SECTION 1302D – PURPOSE

The purpose of this Chapter is to reduce public demand for electricity and the associated detriment to the environment of energy production and delivery by requiring commercial buildings to install or adopt more energy efficient lighting measures.

SECTION 1303D – SCOPE

The provisions of this Chapter shall apply to all privately owned non-residential buildings, including school facilities, the non-residential portions of mixed-use commercial and residential buildings, tourist hotels, and the common areas of residential hotels and multiple-unit residential buildings, all as herein defined.

EXCEPTIONS:

The provisions of this Chapter do not apply to:

1. Residential buildings and residential hotels, except that it shall apply to their common areas.

2. The residential portions of mixed-use commercial and residential buildings, except that it shall apply to their common areas.

SECTION 1304D – DEFINITIONS

For the purpose of this Chapter, certain terms are defined as follows:

COMMERCIAL BUILDING is any privately owned building that is occupancy group A, B, E, F, H, I, L, M or S as defined in this Code and any tourist hotels, as herein defined. When a building is designated for more than one type of occupancy, "Commercial Building" shall mean those spaces within the mixed use building designated as A, B, E, F, H, I, L, M or S or tourist hotel, as herein defined. Except for tourist hotels as herein defined, "Commercial Building" shall include only the common areas of any R ("residential") occupancy buildings for the common areas of any R ("residential") occupancy portions of mixed use buildings.

COMMON AREA is any area, space or room of a building that is made available to the general public as either a client or guest.

DIRECTOR is the Director of the Department of Building Inspection, or his or her designee

EXIT SIGNS are signs located and illuminated as required by the Building Code

LINEAR FLUORESCENT LAMP is a "tube" or "bulb" formed in a straight shape, as distinguished from a circular or u-shape, but not including linear specialty lamps such as black lights.

LUMENAIRE is an interior or exterior complete lighting unit, including internally or externally illuminated signs, consisting of the lamp and the parts designed to distribute the light, to protect the lamp, and to connect the lamp to the power supply, but not including illuminated utilization equipment or exit signs as defined herein.

OCCUPANCY SENSOR CONTROL DEVICE is a device that automatically turns off a luminaires or series of luminaires not more than 30 minutes after it senses that the area is vacated.

TOURIST HOTEL is any residential building, or portion thereof, which is occupied as a hotel, motel or inn and which has a certificated of use for tourist occupancy, or any portion of a residential building which is converted to tourist hotel use pursuant to the Residential Hotel Conversion Ordinance (S.F. Administrative Code, Article 41) or other City law.

UTILIZATION EQUIPMENT is commercial, retail or industrial equipment, including but not limited to refrigeration equipment, fully enclosed retail display cases, vending machines,

printing equipment or conveyors, which uses 4-foot or 8-foot linear fluorescent lamps as an integrated part of such equipment. "Utilization Equipment" shall not include furniture or workstations.

SECTION 1305D – COMPLIANCE REQUIREMENTS

1305D.1 Compliance deadline. No later than December 31, 2011 ("Compliance Deadline"), the owner of each building subject to this Chapter shall self-certify that the entire building meets the standards specified in this Chapter 13D, and if the building is not certified, the building owner shall make such repairs as may be required to conform to this Chapter.

1305D.2 Stay of compliance deadline. The Compliance Deadline stated in Section 1305D.1 shall be stayed for up to two years form the date of an application for a demolition permit for any building subject to this Chapter. If the building is demolished and a Certificate of Completion issued by the Department before the end of the two-year postponement, the requirements of this Chapter shall not apply. If the building is not demolished after the expiration of two year, the provisions of this Chapter shall apply even though the demolition permit is till in effect or a new demolition permit has been issued.

SECTION 1306D – LIGHTING EFFICIENCY MEASURES

1306D.1. Mercury content. The mercury content of each 4-foot linear fluorescent lamp installed after the Compliance Deadline in a luminaires in a building subject to this Chapter shall not exceed 5 mg. The mercury content of each 8-foot linear fluorescent lamp installed after the Compliance Deadline in a luminaires in a building subject to this Chapter shall not exceed 10 mg.

1306D.2. Energy efficiency. The lamp and ballast system in each luminaires that utilizes one or more 4-foot of 8-foot linear fluorescent lamps to provide illumination in a building subject to this Chapter must meet at least one of the following requirements:

1. The lamp and ballast system emits 81 or more lumens per watt of electricity consumed.
2. The luminaires is controlled by an occupancy sensor control device that does not control an area in the building of more than 250 square feet.
3. The luminaires is fitted with a lighting efficiency measure approved by the Director as equivalent to the measures in subsection (1) or (2).
4. The Director finds, based on the facts of the particular building and luminaires, that the energy savings from installing lighting efficiency measures meeting the requirements of this Section will be so insignificant over the life of the luminaires that the measure is not cost efficient.
5. If the owner of a Commercial Building elects to meet the requirements of this Section 1306D.2 with measures that require permits, such permits shall comply with all other applicable requirements of this Code and all other applicable state and local laws.

SECTION 1307D – ENFORCEMENT

Any building maintained in violation of this Chapter shall constitute a public nuisance under the terms of Section 102A of this Code and such nuisance may be abated pursuant to the procedures set forth in Section 102A of this code for unsafe buildings.

SECTION 1308D – RULES

The director, after consulting with the Department of the Environment, and in accordance with Section 104A.2.1 of this Code, shall adopt, and may amend, reasonable rules, guidelines and forms for implementing the provisions and intent of this Chapter.

SECTION 1309D – UNDERTAKING FOR THE GENERAL WELFARE

In undertaking the enforcement of this Chapter, the City and County of San Francisco is assuming an undertaking only to promote the general welfare. It is not assuming, nor is it imposing on its officers and employees, an obligation for breach of which it is liable in money damages to any person who claims that such breach proximately caused injury.

SECTION 1310D – PREEMPTION

Nothing in this Chapter shall be interpreted or applied so as to create any power or duty in conflict with any federal or state law or regulation.

SECTION 1311D – SEVERABILITY

If any provision or clause of this Chapter or the application thereof to any person or circumstance is held to be unconstitutional or to be otherwise invalid by any court of competent jurisdiction, such invalidity shall not affect other provisions, and clauses of this Chapter are declared to be severable.

Chapter 14
EXTERIOR WALLS

SECTION 1403 – PERFORMANCE REQUIREMENTS

1403.8 Add a section as follows:

1403.8 Projections and appendages. Provisions shall be made at the outer edge of all projections and appendages to control rainwater backflow under the projection. Ventilation shall be provided for all enclosed spaces of exposed soffits, bays and other projections in wood framed construction.

Where an uncovered balcony or deck with an impervious surface exceeds 200 square feet (18.58 m^2) in area, drainage shall be conveyed directly to a building drain or building sewer or be conveyed to an approved alternate location based on approved geotechnical and engineering design.

Chapter 15
ROOF ASSEMBLIES AND ROOFTOP STRUCTURES

SECTION 1501 – GENERAL

1501.1 Add a second paragraph as follows:

For qualified historical buildings or properties, see ~~Section 3409~~ 2016 California Existing Building Code, Chapter 12.

SECTION 1503 – WEATHER PROTECTION

1503.4 Add a second paragraph as follows:

All storm- or casual water from roof areas which total more than 200 square feet (18.58 m^2) shall drain or be conveyed directly to the building drain or storm drain or to an approved alternate location based on approved geotechnical and engineering design. Such drainage shall not be directed to flow onto adjacent property or over public sidewalks. Building projections not exceeding 12 inches (305 mm) in width are exempt from drainage requirements without area limitations.

SECTION 1505 – FIRE CLASSIFICATION

1505.1 Revise the first sentence as follows:

1505.1 General. Roof assemblies shall be divided into the classes defined below. Class A **or** B ~~and C~~ roof assemblies and roof coverings required to be listed by this section shall be tested in accordance with ASTM E 108 or UL 790.

1505.1 Add the following at the end of the first paragraph:

Class B or better roof coverings shall be used on all buildings.

1505.1 Add the following second exception:

2. Detached accessory structures with a roof of less than 200 square feet (18.58 m^2) may have roof coverings of Class A, B or C.

Table 1505.1 Revise the table as follows:

TABLE 1505.1 – MINIMUM ROOF COVERING CLASSIFICATION FOR TYPES OF CONSTRUCTION

IA	IB	IIA	IIB	IIIA	IIIB	IV	VA	VB
B	B	B	~~BC~~	B	~~BC~~	B	B	~~BC~~

SECTION 1507 – REQUIREMENTS FOR ROOF COVERINGS

1507.8 Add the following sentence at the end of the paragraph:

Untreated wood shingles shall not be permitted.

1507.9 Add the following sentence at the end of the paragraph:

Untreated wood shakes shall not be permitted.

SECTION 1510 – ROOF TOP STRUCTURES

1510.2.2 Add the following sentence at the end of this section:

Penthouses shall be of a size no larger than the minimum clearances required for the mechanical equipment to be installed or no larger than the vertical shaft opening in the roof.

1510.10 Add the following section:

1510.10 Occupied Roof decks. May be constructed of wood when the following conditions are met:

1. The occupied roof deck is less than 500 square feet (46.45 m^2) in area.

2. The deck boards are spaced not greater than 1/8 inch (3.2 mm) apart.

3. Any open space around the perimeter between the deck and the roof surface shall be enclosed to within 1 inch (25.4 mm) of the roof surface.

4. The decking is constructed of fire-retardant- treated wood approved for exterior use, or 2-inch (50.8 mm) nominal all heart redwood. Guardrails and fences may be constructed of any material permitted by this code.

5. The deck is installed on top of a Class A or B fire-resistive roof assembly. The deck shall not be considered part of such roof assembly.

~~**6. Building Construction Type 3, 4, 5**~~

Chapter 16
STRUCTURAL DESIGN

[Editor's Note: 2013 SFBC Chapter 16B, 16C and 16D Amendments have been relocated to the San Francisco Existing Building Code.]

SECTION 1604 – GENERAL DESIGN REQUIREMENTS

1604.11 Add the following section:

1604.11 Earthquake Recording Instrumentation. The City and County of San Francisco adopts Appendix L.

SECTION 1607 – LIVE LOADS

TABLE 1607.1 — MINIMUM UNIFORMLY DISTRIBUTED LIVE LOADS AND CONCENTRATED LIVE LOADS

Table 1607.1 Add the following footnote o to Occupancy or Use 29, Sidewalks and Driveways

o Driveways subject to vehicle loading shall be designed in accordance with the American Association of State Highway and Transportation Officials (AASHTO) HS-20 Standard Specification for Highways and Bridges. Sidewalks subject to vehicle loading shall be designed for a concentrated load of 10,000 pounds placed upon any space 2½ feet (762 mm) square, wherever this load upon an otherwise unloaded sidewalk would produce stresses greater than those caused by the uniform load of 250 psf required therefor.

Chapter 16A
STRUCTURAL DESIGN

No San Francisco Building Code Amendments

Chapter 17
SPECIAL INSPECTIONS AND TESTS

SECTION 1704 – SPECIAL INSPECTIONS AND TESTS, CONTRACTOR RESPONSIBILITY AND STRUCTURAL OBSERVATION

1704.2 *Replace Exception 2 as follows:*

2. ~~Unless otherwise required by the building official, special inspections are not required for Group U occupancies that are accessory to a residential occupancy including ,but not limited to, those listed in Section 312.1.~~

The special inspections and verifications for foundation concrete, other than cast-in-place drilled piles or caissons, are not required for occupancies in Group R-3 and occupancies in Group U that are accessory to a residential occupancy, but not limited to, those listed in Section 312.1.

This exception shall not apply to foundations serving as retaining walls of soil over 5 feet (1829 mm) in height measured from the base of the foundation, or the structural design of the footing based on a specified compressive strength, f'_c, greater than 2,500 pounds per square inch (psi) (17.2 MPa), regardless of the compressive strength specified in the construction documents or used in the footing construction.

SECTION 1705 – REQUIRED SPECIAL INSPECTIONS AND TESTS

1705.1.1. Add item 4 as follows:

4. Work which, in the opinion of the Director, involves unusual hazards or conditions such as underpinning, shoring, removal of hazardous materials and new construction methods not covered by this code.

1705.4.3 Add the following section:

1705.4.3 Exterior facing. Special inspection is required during fastening of all exterior veneer and ornamentation facing units constructed of concrete, masonry, stone or similar materials, and all curtain walls weighing more than 15 pounds per square foot (73.23 kg/m^2) of wall.

EXCEPTIONS:

1. **Veneers weighing less than 5 pounds per square foot (24.46 kg/m^2) located less than 15 feet (4.57 m) above grade.**
2. **Anchored veneer located less than 10 feet (3.048 m) above grade.**

1705.4.4 Add the following section:

1705.4.4 Retrofit of unreinforced masonry bearing wall buildings. Special inspection is required:

1 **During the testing of mortar quality and performance of masonry shear tests in accordance with SFEBC Section 414B when required by SFEBC Sections 406B.3.3 and 407B.2.**

2 **During repointing operations in accordance with SFEBC Section 416B when required by SFEBC Sections 406B.3.3.7 and 407B.1.**

3 **During the installation of new shear bolts when required by the exception to SFEBC Section 407B.4.**

4 **Prior to the placement of the bolt and grout or adhesive for embedded bolts as required by**

SFEBC Section 407B.4.

5 **During the prequalification tests in accordance with SFEBC Section 415B.3 as permitted by Footnote 8 to SFEBC Table 4B-E.**

1705.5.4 Add the following section:

1705.5.4 Shear walls and floor systems used as shear diaphragms. All connections, including nailing, tiedowns, framing clips, bolts and straps, for those parts of a lateral force resisting system utilizing the following components:

1 **Plywood diaphragms, where shear values exceed 2/3 the values in Tables 2306.3.1 and 2306.3.2.**

2 **Double sheathed shear walls, in all cases.**

3 **Plywood shear walls, wherever nailing or hardware are not visible to the district inspector at the time of cover-up inspection.**

If nailing is not visible to the inspector at the called inspection, or if the special inspector has not inspected the work prior to the concealment, all work concealing such nailing shall be removed in order to permit a complete inspection.

4 **Gypsum wallboard shearwalls where shear values exceed one-half of the values permitted by Footnote a of Table 2306.4.5.**

5 **Fiberboard shearwalls where shear values exceed one-half of the values in Table 2306.4.4.**

6 **Particle-board diaphragms, where shear values exceed one-half of the values in Table 2306.4.3.**

1705.19 Add the following section:

1705.19 Demolition. Demolition of buildings more than two stories or 25 feet (7.62 m) in height. See Section 3303 for demolition requirements.

EXCEPTION: Type V buildings.

1705.20 Add the following section:

1705.20 Bolts Installed in Existing Masonry or Concrete. Except for through bolts with plate washers conforming to SFEBC Table 4B-E, bolts that are newly installed in existing masonry or concrete shall be tested in accordance with SFEBC Section 415B. The number and type of tests required shall be the same as required by SFEBC Section 407B.

1705.21 Add the following section:

1705.21 Construction subject to the Slope Protection Act, created by Section 106A.4.1.4; or construction of a new building or structure, or alterations that involve a substantial increase in the envelope of an existing building or structure within the Edgehill Mountain Slope Protection Area, created by Building Code Section 106A.4.1.2, or the Northwest Mt. Sutro Slope Protection Area,

created by Building Code Section 106A.4.1.3; provided, however, that, until the special inspection reports required by Building Code Section 1704.2.4 are submitted to and approved by the Department, the phase of construction subsequent to the phase or element for which the report was completed cannot commence.

1705.22 Add the following section:

1705.22 Crane Safety. No owner or other person shall operate, authorize or permit the operation of a tower crane on a high-rise building structure until a signed Crane Site Safety Plan, Submittal Form and Crane Safety Compliance Agreement have been accepted by the Building Official.

Chapter 17A
SPECIAL INSPECTIONS AND TESTS

No San Francisco Building Code Amendments

Chapter 18
SOILS AND FOUNDATIONS

No San Francisco Building Code Amendments

Chapter 18A
SOILS AND FOUNDATIONS

No San Francisco Building Code Amendments

Chapter 19
CONCRETE

No San Francisco Building Code Amendments

Chapter 19A
CONCRETE

No San Francisco Building Code Amendments

Chapter 20
ALUMINUM

No San Francisco Building Code Amendments

Chapter 21
MASONRY

No San Francisco Building Code Amendments

Chapter 21A
MASONRY

No San Francisco Building Code Amendments

Chapter 22
STEEL

No San Francisco Building Code Amendments

Chapter 22A
STEEL

No San Francisco Building Code Amendments

Chapter 23
WOOD

SECTION 2304 – GENERAL CONSTRUCTION REQUIREMENTS

2304.12.1.5 Add the following second paragraph:

Walls not accessible for maintenance shall have exterior covering of siding or plywood that are either treated wood or wood of natural resistance to decay. Plywood shall be exterior type, C-C Grade minimum, and not less than 1/2-inch (12.7 mm) thickness unless applied over sheathing.

Plywood manufactured with redwood or cedar faces but with inner plys of other species conforming to DOC Standard PS1-95 may be used, provided the exposed outer face is plugged and not grooved or patterned.

2304.12.3.2 Add the following section:

2304.12.3.2 Wood structural members. Wood structural members that support moisture permeable floors or roofs that are exposed to the weather, such as concrete or masonry slabs, shall be of naturally durable or preservative-treated wood unless separated from such floors or roofs by an impervious moisture barrier **extending up the walls not less than 4 inches (101.6 mm) or shall otherwise be adequately flashed and counter flashed.**

Regardless of finish flooring type or structural materials, the wood sub-floor of toilet rooms and bathrooms shall be protected by a waterproof membrane. Where a single ply sheet membrane is used, all adhesives shall be of a waterproof type and shall be applied so as to form a full unbroken coat between the backing and the membrane being applied. All seams and joints shall be thoroughly sealed.

***Exception*: Interior floors in Group R, Division 3 Occupancies.**

2304.12.2.3 Add the following 2nd paragraph with exception, and 3rd paragraph:

Weather-exposed stairways constructed with concrete, masonry, brick, tile or terrazzo shall be supported on hot-dipped galvanized steel or reinforced concrete stringers.

EXCEPTION: In Group R, Division 3 Occupancies, wood construction on masonry or concrete foundations may be used as supports, and the area under the stair shall be ventilated in compliance with 2304.12.7.

Weather-exposed stairs of precast concrete or metal pan treads may be supported on wood stringers, provided the entire stairway is exposed and the treads are connected to the stringers by hot-dipped galvanized steel or other approved corrosion-resistant fasteners.

Chapter 24
GLASS AND GLAZING

SECTION 2405 – SLOPED GLAZING AND SKYLIGHTS

2405.3 revise this exception as follows:

3. Any glazing material, including annealed glass, is permitted to be installed without screens in the sloped glazing systems of commercial or detached noncombustible green houses used exclusively for growing plants and not open to the public, provided that the height of the greenhouse at the ridge does not exceed 30 feet (9144 mm) above grade **except that for R-3 occupancies and townhouses, *the greenhouse height at the ridge does not exceed 20 feet (6096 mm) above grade. [CRC R308.6.6]***

Chapter 25
GYPSUM BOARD, GYPSUM PANEL PRODUCTS AND PLASTER

No San Francisco Building Code Amendments

Chapter 26
PLASTIC

SECTION 2603 – FOAM PLASTIC INSULATION

2603.3 Revise the first sentence of Exception 3 as follows:

3. Foam plastic insulation that is part of a Class A~~,~~ **or** B ~~or C~~, roof-covering assembly provided the assembly with the foam plastic insulation satisfactorily passes ~~FM 4450~~ **NFPA 276** or UL 1256.

2603.4.1.5. Revise this section as follows:

2603.4.1.5 Roofing. Foam plastic insulation under a roof assembly or roof covering that is installed in accordance with the code and the manufacturer's instructions shall be separated from the interior of the building by wood structural panel sheathing not less than 0.47 inch (11.9mm) in thickness bonded with exterior glue, **and identified as Exposure 1** with edges supported by blocking, tongue-and-groove joints or other approved type of edge support, or an equivalent material. A thermal barrier is not required for foam plastic insulation that is a part of a Class A~~,~~ **or** B ~~or C~~, roof- covering assembly, provided the assembly with the foam plastic insulation satisfactorily passes ~~FM 4450~~ **NFPA 276** or UL 1256

2603.6 Revise this section as follows:

2603.6 Roofing. Foam plastic insulation meeting the requirements of Sections 2603.2, 2603.3 and 2603.4 shall be permitted as a part of a roof-covering assembly, provided the assembly with the foam plastic insulation is a Class A~~,~~ **or** B ~~or C~~, roofing assembly where tested in accordance with ASTM E 108 or UL 790.

Chapter 27
ELECTRICAL

No San Francisco Building Code Amendments

Chapter 28
MECHANICAL SYSTEMS

No San Francisco Building Code Amendments

Chapter 29
PLUMBING SYSTEMS

No San Francisco Building Code Amendments

~~SECTION 2902 – MINIMUM PLUMBING FIXTURES~~

~~**2902.1 Minimum plumbing fixtures. For new construction and changes of occupancy, plumbing fixtures shall be provided for the type of occupancy and in the minimum number shown in Table 2902.1. The minimum number of fixtures shown in Table 2902.1 is assumed to be based on 50 percent male and 50 percent female.**~~

~~**Exception: Where circumstances dictate that a different ratio is needed, the adjustment shall be approved by the Building Official.**~~

~~**The minimum number of plumbing fixtures required to serve existing occupancies shall be the number of fixtures required at the time of original construction or at the time of work previously performed under properly issued permits.**~~

~~**A drinking fountain need not be provided in a drinking or dining establishment.**~~

~~**2902.2 Sanitary facilities. Each building shall be provided with sanitary facilities, including provisions for accessibility.**~~

~~**2902.3 Accessibility for persons with disabilities. Where facilities for persons with disabilities are required, Chapter 11A or 11B of the California Building Code shall be used.**~~

~~**2902.4 Separate facilities. Separate facilities shall be provided for each sex.**~~

~~**Exceptions:**~~

~~**1. In structures or tenant spaces with a total occupant load, including both employees and customers, of 15 or less.**~~

~~**2. In groups B, F, H, M, and S occupancies, where there are four or fewer employees.**~~

~~**TABLE 2902.1 – MINIMUM PLUMBING FIXTURES**~~

~~**TABLE 2902.1 – MINIMUM PLUMBING FIXTURES**~~ ~~**[1, 2, 3]**~~

~~TYPE OF BUILDING OR OCCUPANCY[4]~~	~~WATER CLOSETS[5] (Fixtures per person)~~		~~LAVATORIES[5] (Fixtures per person)~~		~~BATHTUB OR SHOWER (Fixtures per person)~~
	~~Male~~	~~Female~~	~~Male~~	~~Female~~	
~~For the occupancies listed below, use 30 square feet (2.78 m^2) per occupant for the minimum number of plumbing fixtures.~~					

...

Chapter 30
ELEVATORS AND CONVEYING SYSTEMS

3010 Add the following section:

SECTION 3010 – PRIVATE RESIDENCE ELEVATORS

3010.1 PRIVATE RESIDENCE TYPE ELEVATOR is a power passenger elevator which is limited in size, capacity, rise and speed and is installed in a private residence or in a multiple dwelling as a means of access to a private residence.

3010.2 Construction. The construction and installation of private residence elevators, dumbwaiters, and private residence special access lifts shall comply with ANSI/ASME 17.1-2013.

[Note: For other than private residence elevators, dumbwaiters, and private residence special access lifts, see Title 8, California Code of Regulations, California Elevator Safety Regulations.]

Chapter 31
SPECIAL CONSTRUCTION

SECTION 3103 – TEMPORARY STRUCTURES

3103.1.1 Add this sentence to the end of the paragraph.

See Section 106A.1.7 for permit requirements.

SECTION 3107 – SIGNS

Replace this section with the following sections:

3107.1 General. Except as otherwise provided herein, all signs placed upon or attached to any building, structure or property shall comply with this chapter and shall be installed under a valid sign permit.

The electrical portion of the sign shall be constructed in accordance with the requirements of the Electrical Code, and an electrical permit shall be obtained in accordance with that code.

Plans shall be filed with the application for a permit for any sign. When required, computations shall be provided.

3107.1.1 Exempt signs. The following signs are exempt from the requirements of this code:

1. Signs painted on structures. However, such signs must comply with the San Francisco Planning Code, and an application shall be filed with the Department.
2. Bulletin boards for public, charitable or religious institutions, when such boards are located on the premises of said institutions.
3. Real estate signs advertising the sale, rental or lease of the premises on which they are maintained, which do not exceed 15 square feet (1.39 m^2) in size, and which are mounted flush to the building.
4. Professional occupation signs denoting only the name and profession of an occupant in a commercial building, public institutional building or dwelling house, and not exceeding 3 square feet (0.278 m^2) in area for each occupant.

3107.1.2 Prohibitions. The following prohibitions apply to signs:

1. No signs shall be erected, relocated or maintained so as to block any exits or required windows. No sign shall be attached to a standpipe, gutter drain, stairway or fire escape, or interfere with the function or operation of any standpipe or fire escape. No roof sign shall be located within 6 feet (1.829 m) of a standpipe outlet.
2. No sign shall be increased in size, altered in shape or changed by the addition of other signs or advertising matter not specifically allowed by the provisions of this code and the San Francisco Planning Code.
3. No wall sign shall extend across or in front of any window or other exterior opening located above the first story of a building, except as approved by the Building Official.
4. No wall sign erected on a wall adjacent to and facing a street, public space or yard shall project above the parapet walls.

EXCEPTIONS:

1. On a building located on a corner lot, a wall sign may project a maximum of 7 feet (2.134 m) above the roof line on only one street.
2. On any frontage, signs not more than 10 feet (3.048 m) long for any 40-foot (12.19 m) frontage and occupying no more than 25 percent of the lot frontage may project a maximum of 7 feet (2.134 m) above the roof line.

3107.1.3 Permit number on sign. Every sign shall have the permit number clearly painted and maintained on its face or edge, and of such size and location as to be legible from the sidewalk level, ground level or an easily accessible location. Electric signs may have an approved metal tag attached to them instead of painted characters.

3107.1.4 Revocable permits. The permit for any sign over public property may be revoked. A permit granted under Chapter 1A and this chapter for a sign over public property shall not be construed to create any perpetual right but is a revocable license which may be terminated by revocation by the Board of Supervisors.

3107.1.5 Existing signs. This chapter shall not render unlawful the existence or maintenance of any sign erected or maintained by a lawful permit issued prior to the adoption of this ordinance. EXCEPTION: Signs for which lawful permits were issued and which, due to a sidewalk narrowing or street widening project, no longer conform to the requirements of Section 3107.3 shall be altered to conform not later than 90 days following completion of such project.

3107.2 Definitions. For the purposes of this chapter, certain terms are defined as follows:
APPROVED PLASTIC is a plastic material found to be suitable functionally for the purpose for which it is intended and which complies with the requirements of Chapter 26. For outdoor signs, the approval of the plastic shall be based upon considerations of flame spread value only. For indoor signs, the approval shall be based upon flame spread and smoke density values.
AREA OF A SIGN is that area of exposed vertical surface which is included within a rectangle enclosing all the features of the sign. In cases of an irregular sign, it is the sum of the areas of the enclosing rectangles estimated to the nearest 5 square feet (0.465 m^2).
BUSINESS SIGN is a sign which directs attention to a business, commodity, service, industry or other activity which is sold, offered or conducted on the premises upon which such sign is located, or to which it is affixed.
SIGN is any structure, part thereof, or device or inscription which is located upon, attached to or painted, projected or represented on the exterior of any building or structure, including an awning, canopy, marquee or similar appendage, or affixed to the glass on the outside or inside of a window so as to be seen from the outside of the building, and which displays or includes any numeral, letter, word, model, banner, emblem, insignia, symbol, device, light, trademark or other representation used as, or in the nature of, an announcement, advertisement or designation by or of any person, firm, group, organization, place, commodity, product, service, business, profession, enterprise or industry. A sign includes the support, uprights and framework of the display.

3107.3 Height, projection, and location.

Height, projection and location of all signs shall be as specified in Article 6 of the San Francisco Planning Code. No sign shall project past the curbline of any street, alley or public way.

The minimum vertical clearance of signs over public sidewalks shall be 10 feet (3.048 m). Additionally, signs or portions within the outer one- third of a sidewalk shall have 12-foot (3.658 m) clearance, and when within 2 feet (0.61 m) of the curbline shall have 14-foot (4.267 m) clearance.

Roof signs shall be not less than 5 feet (1.524 m) above the roof. Supports shall be spaced at least 6 feet (1.829 m) apart.

3107.4 Design.

The design shall make allowances for the effects of corrosion and lack of maintenance.

No anchor or support of any sign shall be connected to, or suspended by, an unbraced parapet wall, unless such wall is designed in accordance with the requirements for parapet walls specified in Chapter 16.

Fasteners and braces shall be of noncombustible construction, except that stringers for attachment of roof signs may be of 6-inch (152.4 mm) minimum dimension redwood or approved preservative-treated lumber.

3107.5 Construction.

3107.5.1 General. All signs shall be constructed of noncombustible materials except that approved plastics may be used in sign facings as described in Section 3107.5.2. All ferrous metal and all fastenings used in construction or installation, excluding stainless steel, shall be hot-dipped galvanized, porcelain-enameled or otherwise protected in an approved manner against corrosion.

Aluminum may only be used for minor internal members, such as stiffeners and closures, and for sign faces and nonstructural trim. The minimum thickness shall be 0.0299 inch (0.76 mm).

Steel shapes or plates used for primary support shall be not less than 3/16 inch (4.76 mm) in thickness. Sheet metal formed integrally with the sign face or used as cabinet cover shall be not less than 0.0239 inch (24 gauge). Secondary support members not formed integrally with the design face shall be not less than 0.1046 (12 gauge) inch.

The minimum material thickness requirements in this section pertain to the base metal before application of protective covering and need not apply to signs located inside a building.

3107.5.2 Plastics. Where plastics are included in a sign, the application to install a sign shall set forth the manufacturer's trade name, or the common name of the plastic material to be used in the sign, thickness of plastic, aspect ratio, corrugation type, if any, and span. The plastic employed in the signs shall be identified as set forth in Chapter 26 with the manufacturer's trade name, or with the common name of the plastic material.

Plastic sign facing shall conform to the provisions of this section. Plastic sign faces, formed or flat, letters and decorations shall be of sufficient thickness or so formed or supported that they will withstand all loads required by this code.

Plastic facing shall be mounted in a metal frame. Proper provision shall be made for the difference in thermal expansion between plastic members and the frame.

3107.5.3 Electric plastic signs. Every electric sign containing approved plastics shall comply with the minimum requirements set forth in the Standard for Electric Signs, UL No. 48. The attachment of Underwriters Laboratories label, or other approved laboratory per the Electrical Code, shall be sufficient proof that a sign has complied with the requirements of the Electrical Code.

3107.5.4 Wood-faced signs. Projecting signs with wood facing or backing are permitted on any building.

Plywood used for signs shall be exterior grade and not less than 5/8-inch (15.88 mm) thickness. Lumber shall be not less than 1-inch (25.4 mm) nominal and shall be finished to provide a weather- resistant finish.

3107.6 Ground signs.

3107.6.1 Height. The maximum height of a ground sign constructed with wood supports shall be 30 feet (9.14 m), as measured from the top of the sign to the sidewalk in front of the sign or the existing ground under the sign, whichever is higher.

3107.6.2 Design and construction. The design and construction of wood signs shall comply with Chapters 16 and 23 of this code. All wood within 12 inches of the ground shall be pressure-treated wood.

3107.7 Removal of business signs. It shall be unlawful for any person to allow any business sign to remain posted more than 180 days after the activity for which the business sign has been posted has ceased operation on the premises if such person (1) owns, leases or rents the property on which the sign is posted, or (2) owns or operates such business, service, industry or other activity.

SECTION 3112 – WOODBURNING APPLIANCES

3112 Add a section as follows

3112.1 Woodburning appliances. All woodburning appliances installed in new buildings or woodburning appliances being added, reconstructed or replaced in existing buildings shall comply with this section.
Gas fireplaces shall be exempt from the requirements of this section. However, the conversion of a gas fireplace to burn wood shall constitute the installation of a woodburning appliance and shall be subject to the requirements of this section.

3112.2 Definitions. The definitions set forth in this section shall govern the application and interpretation of this section.

BAY AREA AIR QUALITY MANAGEMENT DISTRICT means the air quality agency for the San Francisco Bay Area established pursuant to California Health and Safety Code Section 40200.

EPA means the United States Environmental Protection Agency.

EPA CERTIFIED WOOD HEATER means any wood heater that meets the standards in Title 40, Part 60, Subpart AAA, Code of Federal Regulations in effect at the time of installation and is certified and labeled pursuant to those regulations.

FIREPLACE means any permanently installed masonry or factory-built appliance that burns wood, except a pellet-fueled wood heater, designed to be used with an air-to-fuel ratio greater than or equal to 35 to one.

GARBAGE means all solid, semisolid and liquid wastes generated from residential, commercial and industrial sources, including trash, refuse, rubbish, industrial wastes, asphaltic products, manure, vegetable or animal solids and semisolid wastes, and other discarded solid and semisolid wastes.

GAS FIREPLACE means any device designed to burn natural gas in a manner that simulates the appearance of a woodburning fireplace.

PAINTS means all exterior and interior house and trim paints, enamels, varnishes, lacquers, stains, primers, sealers, undercoatings, roof coatings, wood preservatives, shellacs, and other paints or paint-like products.

PAINT SOLVENTS means all original solvents sold or used to thin paints or to clean up painting equipment.

PELLET-FUELED WOOD HEATER means any appliance that burns wood and operates exclusively on wood pellets.

RECONSTRUCTION means the complete rebuilding of the woodburning appliance such that all or a substantial portion of its parts are new. It does not include repairs made to the appliance in order to make it safer or more efficient.

SOLID FUEL means wood or any other nongaseous or nonliquid fuel.

TREATED WOOD means wood of any species that has been chemically impregnated, painted or similarly modified to improve resistance to insects or weathering. It does not include products such as Duraflame or Presto logs that are specifically designed and sold to be burned in a woodburning appliance.

WASTE PETROLEUM PRODUCTS means any petroleum product other than gaseous fuels that has been refined from crude oil and has been used, and as a result of use has been contaminated with physical or chemical impurities.

WOODBURNING APPLIANCE means fireplace, wood heater, or pellet-fueled wood heater or any similar device burning any solid fuel used for aesthetic or space-heating purposes.

WOOD HEATER means a stove that burns wood.

3112.3 Unauthorized appliances prohibited. No person shall install a woodburning appliance that is not one of the following:

1. **A pellet-fueled wood heater;**
2. **An EPA-certified wood heater; or**

3. A fireplace certified by the Northern Sonoma Air Pollution Control District.

Exceptions:

1. Woodburning appliances that are designed primarily for food preparation in new or existing restaurants or bakeries.

2. Historic woodburning appliances installed in historic structures, as determined by the Building Official of the Department of Building Inspection in consultation with the Director of the Department of Planning.

3112.4 Prohibited fuels. The following fuels are prohibited from use in a woodburning appliance:

1. Garbage;
2. Treated wood;
3. Plastic products;
4. Rubber products;
5. Waste petroleum products;
6. Paints or paint solvents;
7. Coal;
8. Glossy or colored paper;
9. Particle board; or
10. Saltwater driftwood.

3112.5 Certification. Any person who plans to install a woodburning appliance must submit documentation to the Building Official demonstrating that the appliance is a pellet-fueled wood heater, a certified wood heater, or a fireplace certified by Northern Sonoma Air Pollution Control District.

NOTE: Ordinance 13-02, adopted 1-14-2002, which amended Section 3102.8, contained the following findings:

(a) In 1982, the State Air Resources Board (ARB) adopted a particulate matter (PM10) Ambient Air Quality Standard (AAQS). Levels for the PM10 AAQS were selected pursuant to California Code of Regulations Title 17 Section 70200 to protect the health of people who are sensitive to exposure to fine particles.

(b) Research indicates that wood smoke is a significant contributor to PM10 levels that pose significant health risks.

(c) The City and County of San Francisco desires to lessen the risk to life and property from air pollution from woodburning appliances.

(d) The City and County of San Francisco finds that the proposed regulation will significantly reduce the increases in particulate emissions from future installation and construction activities.

(e) The City and County of San Francisco finds a need exists to adopt regulations which apply to woodburning combustion emissions.

Chapter 31A
SYSTEMS FOR WINDOW CLEANING OR EXTERIOR BUILDING MAINTENANCE

No San Francisco Building Code Amendments

Chapter 31B [DPH]
PUBLIC POOLS

No San Francisco Building Code Amendments

Chapter 31C [DPH]
RADIATION

No San Francisco Building Code Amendments

Chapter 31D [DPH]
FOOD ESTABLISHMENTS

No San Francisco Building Code Amendments

Chapter 31E
RESERVED

No San Francisco Building Code Amendments

Chapter 31F [SLC]
MARINE OIL TERMINALS

No San Francisco Building Code Amendments

Chapter 32
ENCROACHMENTS INTO PUBLIC RIGHT-OF-WAY

SECTION 3201 – GENERAL

3201.4 Revise this section as follows:

3201.4 Drainage. Drainage water collected from a roof, awning, canopy, or marquee, and condensate from mechanical equipment **shall be conducted to the building drain or building sewer, and** shall not flow over a public walking surface.

SECTION 3202 – ENCROACHMENTS

3202.3.1 Replace this section as follows:

3202.3.1 Awnings, canopies, marquees and signs. Awnings, canopies, marquees and signs shall be constructed so as to support applicable loads as specified in Chapter 16. **Canopies shall be allowed only over entrance doorways and only for Occupancy Groups A, B, F-1, M, S-1, S-2 and R. Canopies may be constructed as awnings and with the same limitations except that:**

1. **The maximum width shall be 10 feet (3.048 m); and**
2. **The maximum extension over public sidewalk may be to a point 2 feet (0.61 m) from the curb; and**
3. **The outer column support shall be located in the outer one-third of the sidewalk.**

3202.3.2 Replace this section as follows:

3202.3.2 Windows, balconies, architectural features and mechanical equipment.

A 3-foot (0.914 m) projection shall be permitted for bay and oriel windows when the clearance above grade is at least 10 feet (3.048 m) and the width of the sidewalk is greater than 9 feet (2.74 m). Where the sidewalk width is 9 feet (2.74 m) or less, the projection shall not exceed 2 feet (0.61 m).

For all other appendages, a 2-foot (0.61 m) projection is permitted when the clearance above grade is at least 10 feet (3.048 m). The projection may be increased 1 inch (25.4 mm) for each additional foot of clearance over 10 feet (3.048 m), to a maximum of 4 feet (1.219 m).

3202.3.4 Add the following after the first paragraph as follows:

A covered pedestrian walkway may be constructed over a street between buildings of only Types I-A and I-B construction. Permission from the Board of Supervisors and approval of the Department of Public Works and Planning Commission is required. The pedestrian walkway shall comply with the following conditions:

1. **The pedestrian walkway shall be equipped with an automatic sprinkler system. The supporting structure shall be three-hour fire-resistive construction. Columns located within 8 feet (2.438 m) of the curb, or otherwise vulnerable to vehicle impact, shall either be designed for such impact or protected from the impact.**

2. **The openings in the exterior walls of the buildings at the ends of the pedestrian walkway shall be protected by 1½ hour fire assemblies.**

SECTION 3203 – SIDEWALK CONSTRUCTION

3203 Add a section as follows:

3203.1 General. Sidewalks shall be constructed in accordance with the Public Works Code.

Sidewalks over excavated areas shall be supported on noncombustible construction with 3-hour fire-rated protection. The sidewalk shall be waterproofed by use of a hot mopped asphalt membrane or other approved means.

3203.2 Openings in Sidewalks.

3203.2.1 Sidewalk trapdoor. Every basement extending under the sidewalk shall have an approved sidewalk trapdoor. The minimum size of the trapdoor opening shall be 4 feet by 4 feet (1.219 m by 1.219 m). However, trapdoors shall not be required where the basement is provided with an automatic sprinkler system.

3203.2.2 Sidewalk elevators. All openings hereafter constructed in sidewalks for sidewalk elevators shall be located in the outer half of the sidewalks, next to the curb. The outer edges of the openings shall be not more than 30 inches (762 mm) from the outer line of the curb. The length of the sides of the openings at right angles to the curb shall not exceed one-half of the width of the sidewalk and in no case shall it exceed 5 feet (1.524 m).

3203.2.3 Any other purpose. Openings on the sidewalks for any other purpose, if placed outside the property line, shall be covered with approved gratings having a maximum opening between bars of ½ inch (12.7 mm), or with covers having a rough surface, and rabbeted flush with the sidewalk. When a cover is placed in any sidewalk, it shall be placed as near as practicable to the line of the curb. All spaces under sidewalks shall be thoroughly ventilated.

3203.2.4 Framing. All framing supporting only the sidewalk opening shall be of noncombustible material.

3203.2.5 Guards. Metal guards will be required for openings in sidewalks in accordance with the Police Code.

3203.3 Electrical Transformers. No portion of any electrical transformer pad shall be constructed, nor electrical transformer installed on the surface of any portion of any public sidewalk.

Chapter 33
SAFEGUARDS DURING CONSTRUCTION

SECTION 3302 – CONSTRUCTION SAFEGUARDS

3302 Add a new section as follows:

3302.4 Fencing. Provide for the enclosing, fencing, and boarding up or by fire watch or other means of preventing access to the site by unauthorized persons when work is not in progress.

SECTION 3303 – DEMOLITION

3303.1 Add new sections as follows:

3303.1.1 Buildings other than Type V. The demolition of structures of Types I, II, III and IV construction greater than two stories or 25 feet (7.62 m) in height shall comply with the requirements of this section.

The requirements of this section shall also apply to the demolition of post-tensioned and pre- tensioned concrete structures.

3303.1.2 Required plans. Prior to approval of an application for a demolition permit, two sets of detailed plans shall be submitted for approval, showing the following:

1. **The sequence of operation floor by floor, prepared by a registered civil engineer or licensed architect.**
2. **The location of standpipes.**
3. **The location and details of protective canopies.**
4. **The location of truck crane during operation.**
5. **Any necessary fence or barricade with lights.**
6. **Any floor or wall left standing.**
7. **The schedule of the days when the demolition will be done, i.e., on weekdays or on Sundays.**

3303.4 Replace this section with the following:

3303.4 Vacant Lot. When a building is demolished, the permittee must remove all debris and remove all parts of the structure above grade except those parts that are necessary to provide support for the adjoining property.

3303.8 Add a new section as follows:

3303.8 Special inspection. A registered civil engineer or licensed architect shall supervise the demolition work in accordance with rules and regulations adopted by the Building Official pursuant to Section 104A.2.1 to assure the work is proceeding in a safe manner and shall submit written progress reports to the Department in accordance with Section 1704.2.4.

SECTION 3304 – SITE WORK

3304.1 Add a second paragraph as follows:

The City and County of San Francisco adopts Appendix J for the purpose of regulating excavation and grading.

3304.1 Add a third paragraph as follows:

Temporary wood shoring and forms. All wood used for temporary shoring, lagging or forms that will be backfilled against or otherwise left permanently in place below grade shall be treated wood as defined in Section 2302.

SECTION 3306 – PROTECTION OF PEDESTRIANS

3306.10 Add a section as follows:

3306.10 Chutes. Chutes for the removal of materials and debris shall be provided in all parts of demolition operations that are more than 20 feet (6.096 m) above the point where the removal of material is effected. Such chutes shall be completely enclosed. They shall not extend in an unbroken line for more than 25 feet (7.62 m) vertically but shall be equipped at intervals of 25 feet (7.62 m) or less with substantial stops or offsets to prevent descending material from attaining dangerous speeds.

The bottom of each chute shall be equipped with a gate or stop with a suitable means for closing or regulating the flow of material.

Chutes, floors, stairways and other places affected shall be watered sufficiently to keep down the dust.

3306.11 Add a section as follows:

3306.11 Falling debris. Wood or other construction materials shall not be allowed to fall in large pieces onto an upper floor. Bulky materials, such as beams and columns, shall be lowered and not allowed to fall.

3306.12 Add a section as follows:

3306.12 Structure stability. In buildings of wood frame construction, the supporting structure shall not be removed until the parts of the structure being supported have been removed.

In buildings with basements, the first floor construction shall not be removed until the basement walls are braced to prevent overturning, or an analysis acceptable to the Building Official is submitted which shows the walls to be stable without bracing.

SECTION 3307 – PROTECTION OF ADJOINING PROPERTY

3307.1 Insert a note at the end of this section as follows:

3307.1 Protection required. Adjoining public and private property shall be protected from damage during construction, remodeling and demolition work. Protection must be provided for footings, foundations, party walls, chimneys, skylights, and roofs. Provisions shall be made to control water runoff and erosion during construction or demolition activities. The person making or causing an excavation to

be made shall provide written notice to the owners of adjoining buildings advising them that the excavation is to be made and that the adjoining buildings should be protected. Said notification shall be delivered not less than 10 days prior to the scheduled starting date of the excavation.

Note: Other requirements for protection of adjacent property of adjacent and depth to which protection is requested are defined by California Civil Code Section 832, and is reprinted herein for convenience.

Section 832. Each coterminous owner is entitled to the lateral and subjacent support which his land receives from the adjoining land, subject to the right of the owner of the adjoining land to make proper and usual excavations on the same for purposes of construction or improvement, under the following conditions:

1. Any owner of land or his lessee intending to make or to permit an excavation shall give reasonable notice to the owner or owners of adjoining lands and of buildings or other structures, stating the depth to which such excavation is intended to be made, and when the excavating will begin.

2. In making any excavation, ordinary care and skill shall be used, and reasonable precautions taken to sustain the adjoining land as such, without regard to any building or other structure which may be thereon, and there shall be no liability for damage done to any such building or other structure by reason of the excavation, except as otherwise provided or allowed by law.

3. If at any time it appears that the excavation is to be of a greater depth than are the walls or foundations of any adjoining building or other structure, and is to be so close as to endanger the building or other structure in any way, then the owner of the building or other structure must be allowed at least 30 days, if he so desires, in which to take measures to protect the same from any damage, or in which to extend the foundations thereof, and he must be given for the same purposes reasonable license to enter on the land on which the excavation is to be or is being made.

4. If the excavation is intended to be or is deeper than the standard depth of foundations, which depth is defined to be a depth of nine feet below the adjacent curb level, at the point where the joint property line intersects the curb and if on the land of the coterminous owner there is any building or other structure the wall or foundation of which goes to standard depth or deeper then the owner of the land on which the excavation is being made shall, if given the necessary license to enter on the adjoining land, protect the said adjoining land and any such building or other structure thereon without cost to the owner thereof, from any damage by reason of the excavation, and shall be liable to the owner of such property for any such damage, excepting only for minor settlement cracks in buildings or other structures.

SECTION 3311 – STANDPIPES

3311.2 Replace this section and title with the following:

3311.2 ~~Buildings being demolished.~~<u>Fire Safety During Demolition</u> ~~Where a building is being demolished and a standpipe exists within such a building, such standpipe shall be maintained in an operable condition so as to be available for use by the fire department. Such standpipe shall be demolished with the building but shall not be demolished more than one floor below the floor being~~

~~demolished.~~ **All existing dry standpipes shall be maintained in an operative condition and with all inlets and outlets accessible for use within two floors of the highest remaining portion of a floor of the building. The inlets shall be so identified at the street level as to be easily located by the Fire Department. They shall be removed in place with floor removal and the upper ends capped above the highest remaining valve. The remaining system on the lower floors shall continue operative until all construction above the third floor has been removed.**

Chapter 34
RESERVED

[Editor's Note: 2013 SFBC Chapter 34B Amendments has been relocated to the San Francisco Existing Building Code.]

No San Francisco Building Code Amendments

Chapter 34A
EXISTING STRUCTURES

No San Francisco Building Code Amendments

Chapter 35
REFERENCED STANDARDS

No San Francisco Building Code Amendments

Add the following chapter:

Chapter 36
CALIFORNIA RESIDENTIAL CODE (CRC)

(CRC) CHAPTER 1
SCOPE AND APPLICATION
Replace this chapter with Chapter 1 & 1A of the San Francisco Building Code.
See Chapter 1A for the Administration provisions of the San Francisco Building Code.
(CRC) CHAPTER 2
DEFINITIONS
Replace this chapter with Chapter 2 through 35 of the San Francisco Building Code.

(CRC) CHAPTER 3
BUILDING PLANNING
Replace this chapter with Chapter 2 through 35 of the San Francisco Building Code
(CRC) CHAPTER 4
FOUNDATIONS
Replace this chapter with Chapter 2 through 35 of the San Francisco Building Code
(CRC) CHAPTER 5
FLOORS
Replace this chapter with Chapter 2 through 35 of the San Francisco Building Code
(CRC) CHAPTER 6
WALL CONSTRUCTION
Replace this chapter with Chapter 2 through 35 of the San Francisco Building Code
(CRC) CHAPTER 7
WALL COVERING
Replace this chapter with Chapter 2 through 35 of the San Francisco Building Code
(CRC) CHAPTER 8
ROOF-CEILING CONSTRUCTION
Replace this chapter with Chapter 2 through 35 of the San Francisco Building Code
(CRC) CHAPTER 9
ROOF ASSEMBLIES
Replace this chapter with Chapter 2 through 35 of the San Francisco Building Code
(CRC) CHAPTER 10
CHIMNEYS AND FIREPLACES
Replace this chapter with Chapter 2 through 35 of the San Francisco Building Code
(CRC) CHAPTER 44
REFERENCED STANDARDS
Replace this chapter with Chapters 35 of the San Francisco Building Code
(CRC) APPENDIX A
SIZING AND CAPACITIES OF GAS PIPING
This appendix is not adopted in San Francisco
(CRC) APPENDIX B
SIZING OF VENTING SYSTEMS SERVING APPLIANCES EQUIPPED WITH DRAFT HOODS, CATEGORY 1 APPLIANCES, AND APPLIANCES LISTED FOR USE WITH TYPE B VENTS
This appendix is not adopted in San Francisco
(CRC) APPENDIX C
EXIT TERMINALS OF MECHANICAL DRAFT AND DIRECT-VENT VENTING SYSTEMS
This appendix is not adopted in San Francisco
(CRC) APPENDIX D
RECOMMENDED PROCEDURE FOR SAFETY INSPECTION OF AN EXISTING APPLIANCE INSTALLATION
This appendix is not adopted in San Francisco
(CRC) APPENDIX E
MANUFACTURED HOUSING USED AS DWELLINGS
This appendix is not adopted in San Francisco
(CRC) APPENDIX F
PASSIVE RADON GAS CONTROLS
This appendix is not adopted in San Francisco
(CRC) APPENDIX G
PIPING STANDARDS FOR VARIOUS APPLICATIONS
This appendix is not adopted in San Francisco

(CRC) APPENDIX H
PATIO COVERS
Replace this chapter with Appendix I of the San Francisco Building Code
(CRC) APPENDIX I
PRIVATE SEWAGE DISPOSAL
This appendix is not adopted in San Francisco
(CRC) APPENDIX J
EXISTING BUILDINGS AND STRUCTURES
This appendix is not adopted in San Francisco
(CRC) APPENDIX K
SOUND TRANSMISSION
This appendix is not adopted in San Francisco
(CRC) APPENDIX L
PERMIT FEES
This appendix is not adopted in San Francisco
(CRC) APPENDIX M
HOME DAY CARE—R-3 OCCUPANCY
This appendix is not adopted in San Francisco or applicable in California
(CRC) APPENDIX N
VENTING METHODS
This appendix is not adopted in San Francisco
(CRC) APPENDIX O
AUTOMATIC VEHICULAR GATES
This appendix is not adopted in San Francisco
(CRC) APPENDIX P
SIZING OF WATER PIPING SYSTEM
This appendix is not adopted in San Francisco
(CRC) APPENDIX Q
RESERVED
This appendix is not adopted in San Francisco
(CRC) APPENDIX R
LIGHT STRAW-CLAY CONSTRUCTION
(CRC) APPENDIX S
STRAWBALE CONSTRUCTION
This appendix is not adopted in San Francisco
(CRC) APPENDIX T
RECOMMENDED PROCEDURE FOR WORST-CASE TESTING OF ATMOSPHERE VENTING SYSTEMS UNDER N1102.4 OR N1105 CONDITIONS $\leq 5ACH_{50}$
This appendix is not adopted in San Francisco
(CRC) APPENDIX U
SOLAR-READY PROVISIONS-DETACHED ONE-AND TWO-FAMILY DWELLINGS, MULTIPLE SINGLE-FAMILY DWELLINGS (TOWNHOUSES)
This appendix is not adopted in San Francisco
(CRC) APPENDIX U
SWIMMING POOL SAFETY ACT
This appendix is not adopted in San Francisco
(CRC) APPENDIX W
AREAS PROTECTED BY THE FACILITIES OF THE CENTRAL VALLEY FLOOD PROTECTION PLAN
This appendix is not adopted in San Francisco

Add the following appendices:

CALIFORNIA BUILDING CODE (CBC) APPENDICES

(CBC) APPENDIX A
EMPLOYEE QUALIFICATIONS

This appendix is not adopted in San Francisco

(CBC) APPENDIX B
BOARD OF APPEALS

This appendix is not adopted in San Francisco

(CBC) APPENDIX C
GROUP U-AGRICULTURAL BUILDINGS

No San Francisco Building Code Amendments

(CBC) APPENDIX D
FIRE DISTRICTS

This appendix is not adopted in San Francisco

(CBC) APPENDIX E
SUPPLEMENTARY ACCESSIBILITY REQUIREMENTS

This appendix is not adopted in San Francisco

(CBC) APPENDIX F
RODENTPROOFING

This appendix is not adopted in San Francisco

(CBC) APPENDIX G
FLOOD-RESISTANT CONSTRUCTION

This appendix is not adopted in San Francisco

(CBC) APPENDIX H
SIGNS

This appendix is not adopted in San Francisco

(CBC) APPENDIX I
PATIO COVERS

No San Francisco Building Code Amendments

APPENDIX J
GRADING

San Francisco adopts Appendix J as amended below for grading in San Francisco

SECTION J103 – PERMITS REQUIRED

JI03.2 Add the following five exemptions:

8. **An excavation that (1) is less 2 feet (610 mm) in depth or (2) does not create a cut slope greater than 5 feet (1524 mm) in height and steeper than 1 unit vertical in 1-1/2 units horizontal (66.7% slope).**

9. **A fill less than 1 foot (305 mm) in depth and placed on natural terrain with a slope flatter than 1 unit vertical in 5 units horizontal (20% slope), or less than 3 feet (914 mm) in depth, not intended to support structures, that does not exceed 50 cubic yards (38.3 m^3) on any one lot and does not obstruct a drainage course.**

10. **Grading performed incidental to and in connection with the construction of a building or structure on a single lot, pursuant to a valid building permit issued therefor. The cost of such grading shall be included in the total valuation of the building for determining permit fees, and a separate grading permit will not be required.**

11. **Grading necessary for and incidental to and in connection with the construction of any parks, public streets or roadways, or the construction of sewers, or utilities under or within the boundaries of such roadways or streets when such work is under the direct supervision of the Recreation and Park Department, the Department of Public Works, the Public Utilities Commission or other governmental agencies.**

12. **Grading operations which in the opinion of the Director are of such a minor nature that the proposed work will not affect the adjoining land, or any existing structures, either those on the same or adjoining land. For such grading operations, the requirements of this chapter may be waived in whole or in part.**

SECTION J104 – PERMIT APPLICATION AND SUBMITTALS

J104.3 Replace the exception as follows:

Exception: ~~A geotechnical report is not required where the building official determines that the nature of the work applied for is such that a report is not necessary.~~ **Grading conforming to all of the following requirements:**

1. **No cut section is greater than 10 feet (3.048 m) in vertical height.**
2. **No cut slope is steeper than 2 horizontal to 1 vertical.**
3. **The tops of cut banks are separated from any structure or major improvement by a distance, measured horizontally, equal to not less than the height of the bank.**
4. **Not more than 5,000 cubic yards (3825 m^3) shall be involved in grading.**
5. **Grading performed at a site outside the limits of known slide areas.**

All other grading shall require soils report and the grading plans shall include, but not limited to, the following information:

(1) The design of retaining walls or other structures used to support cuts or fills. Such retaining walls or structures, except when part of a building, may be constructed under this permit, provided the cost of same is included in the valuation shown on the application.

(2) The sequencing of cut and fill operations in a manner that assures interim stability of the site.

SECTION J106 – EXCAVATIONS

J106.1 Delete all exceptions.

SECTION J109 – DRAINAGE AND TERRACING

J109 Add the following section:

J109.5 Surface Drainage. All areas which are surfaced with asphalt, concrete or other paving of similar imperviousness, and which exceed a total area of 200 square feet (18.58 m^2), shall have storm- and casual water drained directly to a public sewer or storm drain.

Drainage shall not be directed to flow onto adjacent property or to drain onto public sidewalks. See Section 1503.4 for roof drainage.

SECTION J112 – GRADING FEES

J112 Add the following section:

SECTION J112 GRADING FEES

The permit and the plan review fees shall be per Section 110A, Table 1A-F - Specialty Permit Fees, Table 1A-A - Building Permit Fees. The valuation shall be based on the volume of earthwork.

(CBC) APPENDIX K
GROUP R-3 AND GROUP R-3.1 OCCUPANCIES PROTECTED BY THE FACILITIES OF THE CENTRAL VALLEY FLOOD PROTECTION PLAN

This appendix is not adopted in San Francisco

(CBC) APPENDIX L
EARTHQUAKE RECORDING INSTRUMENTATION

No San Francisco Building Code Amendments

(CBC) APPENDIX M
TSUMANI-GENERATED FLOOD HAZARD

This appendix is not adopted in San Francisco

DRAFT

BUILDING INSPECTION COMMISSION (BIC)

Department of Building Inspection **Voice (415) 558-6164 - Fax (415) 558-6509**
1660 Mission Street, San Francisco, California 94103-2414

Edwin M. Lee
Mayor

COMMISSION

Angus McCarthy
President

Myrna Melgar
Vice-President

Kevin Clinch
Gail Gilman
John Konstin
Frank Lee
Debra Walker

Sonya Harris
Secretary

Tom C. Hui
Director

August 26, 2016

Ms. Angela Calvillo
Clerk of the Board
Board of Supervisors, City Hall
1 Dr. Carlton B. Goodlett Place, Room 244
San Francisco, CA 94102-4694

RE: Code amendments to the 2016 California Building Standards Code, including the Building, Existing Building, Residential, Mechanical, Plumbing, Electrical, and Green Building Codes and recommend approval to the Board of Supervisors.

Dear Ms. Calvillo:

On August 17, 2016 the Building Inspection Commission held a public hearing on the proposed Code amendments referenced above.

The Commission voted unanimously (7-0) to recommend that the Board of Supervisors approve the amendments.

The Commissioners voted as follows:

President McCarthy	Aye	Vice-President Melgar	Aye
Commissioner Clinch	Aye	Commissioner Gilman	Aye
Commissioner Konstin	Aye	Commissioner Lee	Aye
Commissioner Walker	Aye		

Enclosed please find the Code Advisory Committee's recommendation to the BIC. Under separate cover, copies of the proposed amendments will follow from the Technical Services Division of the Department of Building Inspection.

Should you have any questions, please do not hesitate to call me at 558-6164.

Sincerely,

Sonya Harris
Commission Secretary

cc: Tom C. Hui, Director
Mayor Edwin M. Lee
Supervisor John Avalos
Supervisor London Breed
Supervisor David Campos
Supervisor Malia Cohen
Supervisor Mark Farrell
Supervisor Jane Kim
Supervisor Eric Mar
Supervisor Aaron Peskin
Supervisor Katy Tang
Supervisor Scott Wiener
Supervisor Norman Yee
Deputy City Attorney John Malamut

City and County of San Francisco
Department of Building Inspection

Edwin M. Lee, Mayor
Tom C. Hui, S.E., C.B.O., Director

August 26, 2016

RECEIVED
BOARD OF SUPERVISORS
SAN FRANCISCO
2016 AUG 29 AM 11:12
BY

Angela Calvillo, Clerk of the Board
Board of Supervisors
#1 Dr. Carlton B. Goodlett Place, Room 244
San Francisco, CA 94102-4689

Dear Ms. Calvillo:

Attached please find an original and two copies (1 electronic CD) of seven proposed ordinances (approved by the Building Inspection Commission on August 17, 2016) for the Board of Supervisors approval, which repeal the San Francisco amendments to the 2013 California Building Standards Codes and adopt replacement amendments to the new 2016 California Building Standards Codes effective January 1, 2017. (One copy of these 2016 California Building Standards Codes are hereby provided for your reference in the form of each California adopted model code and their associated California amendments to them.)

The following is a list of accompanying documents:

1) Approval letter from the Building Inspection Commission
2) Exhibit A, Standard Findings
3) San Francisco Building Code Ordinance, Legislative Digest (Includes Residential Code below), Findings, proposed amendment text (Building)
4) San Francisco Building Code; Residential Building Requirements Ordinance, Legislative Digest (included in Building Code above). Findings, proposed amendment text. (Residential)
5) San Francisco Existing Building Code Ordinance, Legislative Digest, Findings, proposed amendment text. (Existing Building)
6) San Francisco Electrical Code Ordinance, Legislative Digest, Findings, proposed amendment text (Electrical)
7) San Francisco Mechanical Code Ordinance, Legislative Digest, Findings, proposed amendment text (Mechanical)
8) San Francisco Plumbing Code Ordinance, Legislative Digest, Findings, proposed amendment text (Plumbing)
9) San Francisco Green Building Code Ordinance, Legislative Digest, Findings, proposed amendment text (Green), Cost effectiveness study.

In order for the San Francisco code amendments to coordinate with the California codes, which have an effective date of January 1, 2017, the timeline for approval and adoption requires that the codes be submitted to the Board of Supervisors on or before August 29, 2016 for introduction and assignment to the Land Use Committee (on September 6, 2016), a thirty-day review and comment period follows prior to hearing at the Land Use Committee on October 17, 2016. When approved, it is proposed that

Technical Services Division
1660 Mission Street – San Francisco CA 94103
Office (415) 558-6205– FAX (415) 558-6401 – www.sfdbi.org

the Board of Supervisor agendize Readings on October 25, 2016 and November 1, 2016. Upon their approval, the ordinances will be forwarded to the Mayor for signature within 10 days, followed by a 30-day wait period (ending approximately December 12, 2016) before filing with the California Building Standards Commission to become effective for an implementation date of January 1, 2017.

The following person may be contacted regarding this matter:

Kirk Means, Building Inspector
Technical Services Division
Department of Building Inspection
Phone: (415) 575-6832
Fax: (415) 558-6401

Attachments: As stated

Table of Contents

1. General
   a. Approval letter from the Building Inspection Commission
   b. Exhibit A – Standard Findings
2. Building Code
   a. Legislative Digest
   b. San Francisco Building Code Ordinance
   c. Findings
   d. San Francisco Building Code Amendments
3. Residential Code
   a. Legislative Digest (Included in Building Code Digest above)
   b. San Francisco Building Code; Residential Building Requirements Ordinance
   c. Findings – See Chapter 36 of the Building Code Findings
   d. Residential Building Requirements – See Chapter 36 of the San Francisco Building Code
4. Existing Building Code
   a. Legislative Digest
   b. San Francisco Existing Building Code Ordinance
   c. Findings
   d. San Francisco Existing Building Code Amendments
5. Electrical Code
   a. Legislative Digest
   b. San Francisco Electrical Code Ordinance
   c. Findings
   d. San Francisco Electrical Code Amendments
6. Mechanical Code
   a. Legislative Digest
   b. San Francisco Mechanical Code Ordinance
   c. Findings
   d. San Francisco Mechanical Code Amendments
7. Plumbing Code
   a. Legislative Digest
   b. San Francisco Plumbing Code Ordinance
   c. Findings
   d. San Francisco Plumbing Code Amendments
8. Green Code
   a. Legislative Digest
   b. San Francisco Green Building Code Ordinance
   c. Findings
   d. San Francisco Green Building Code Amendments
   e. Cost Effectiveness Study

BOARD of SUPERVISORS

City Hall
Dr. Carlton B. Goodlett Place, Room 244
San Francisco 94102-4689
Tel. No. 554-5184
Fax No. 554-5163
TDD/TTY No. 554-5227

October 6, 2016

Lisa Gibson
Acting Environmental Review Officer
Planning Department
1650 Mission Street, Ste. 400
San Francisco, CA 94103

Dear Ms. Gibson:

On September 6, 2016, Building Inspection Commission introduced the following proposed legislations:

File No. 160944
Ordinance repealing the 2013 Building Code in its entirety and enacting a 2016 Building Code consisting of the 2016 California Building Code and the 2016 California Residential Code, as amended by San Francisco; adopting environmental findings and findings of local conditions under the California Health and Safety Code; providing for an operative date of January 1, 2017; and directing the Clerk of the Board to forward the legislation to the California Building Standards Commission as required by State law.

File No. 160945
Ordinance adding the provisions of the 2016 California Residential Code with local amendments into various chapters of the 2016 San Francisco Building Code, and adding Chapter 36 to the Building Code to serve as a directory of where such provisions may be found; adopting environmental findings and findings of local conditions under the California Health and Safety Code; providing for an operative date of January 1, 2017; and directing the Clerk of the Board to forward the legislation to the California Building Standards Commission as required by State law.

File No. 160946
Ordinance repealing the 2013 Electrical Code in its entirety and enacting a 2016 Electrical Code consisting of the 2016 California Electrical Code as amended by San Francisco; adopting environmental findings and findings of local conditions under the California Health and Safety Code; providing an operative date of January 1, 2017; and directing the Clerk of the Board of Supervisors to forward the legislation to the California Building Standards Commission as required by State law.

File No. 160947
Ordinance enacting a 2016 San Francisco Existing Building Code consisting of the 2016 California Existing Building Code with San Francisco amendments; adopting environmental findings and findings of local conditions under the California Health and Safety Code; providing for an operative date of January 1, 2017; and directing the Clerk of the Board to forward the legislation to the California Building Standards Commission as required by State law.

File No. 160948
Ordinance repealing the 2013 Green Building Code in its entirety and enacting a 2016 Green Building Code consisting of the 2016 California Green Building Standards Code as amended by San Francisco; adopting environmental findings and findings of local conditions under the California Health and Safety Code; providing for an operative date of January 1, 2017; and directing the Clerk of the Board of Supervisors to forward the legislation to the California Building Standards Commission as required by State law.

File No. 160949
Ordinance repealing the 2013 Mechanical Code in its entirety and enacting a 2016 Mechanical Code consisting of the 2016 California Mechanical Code as amended by San Francisco; adopting environmental findings and findings of local conditions under the California Health and Safety Code; providing an operative date of January 1, 2017; and directing the Clerk of the Board of Supervisors to forward the legislation to the California Building Standards Commission as required by State law.

File No. 160950
Ordinance repealing the 2013 Plumbing Code in its entirety and enacting a 2016 Plumbing Code consisting of the 2016 California Plumbing Code as amended by San Francisco; adopting environmental findings and findings of local conditions under the California Health and Safety Code; providing an operative date of January 1, 2017; and directing the Clerk of the Board of Supervisors to forward the legislation to the California Building Standards Commission as required by State law.

This legislation is being transmitted to you for environmental review.

Angela Calvillo, Clerk of the Board

By: Alisa Somera, Legislative Deputy Director
Land Use and Transportation Committee

Attachment

c: Joy Navarrete, Environmental Planning
Jeanie Poling, Environmental Planning

CALIFORNIA
ADOPTED THE FOLLOWING:

FINAL EXPRESS TERMS
FOR STATE AGENCY APPROVED CHANGES
TO
THE 2015 INTERNATIONAL BUILDING CODE (IBC) AND INTERNATIONAL EXISTING BUILDING CODE (IEBC)
FOR
THE 2016 CALIFORNIA BUILDING CODE (CBC) AND CALIFORNIA EXISTING BUILDING CODE CALIFORNIA CODE OF REGULATIONS (CCR), TITLE 24, PART 2 & 10

- THE CALIFORNIA BUILDING STANDARDS COMMISSION (BSC)
- THE DIVISION OF THE STATE ARCHITECT – ACCESS COMPLIANCE (DSA-AC)
- THE DIVISION OF THE STATE ARCHITECT – ACCESS COMPLIANCE (DSA-SS)
- THE DEPARTMENT OF HOUSING AND COMMUNITY DEVELOPEMENT (HCD)
- THE OFFICE OF STATE WIDE HEALTH PLANNING AND DEVELOPMENT (OSHPD)
- THE OFFICE OF STATE WIDE HEALTH PLANNING AND DEVELOPMENT (OSHPD)
- THE OFFICE OF THE STATE FIRE MARSHAL (SFM)

Disclaimer: All Final Express Terms for the above mentioned agencies are available and were obtained from the Building Standards Commission at the following links:
http://www.bsc.ca.gov/Rulemaking/adoptcycle/2015CodeAdoptionCycle/ApprovedStandardsDecember2015.aspxhttp://www.bsc.ca.gov/Rulemaking/adoptcycle/2015CodeAdoptionCycle/ApprovedStandardsJanuary2016.aspx

TABLE OF CONTENTS

DIVISION	AGENCY PROPOSAL #
I) 2015 INTERNATIONAL BUILDING CODE STATE AGENCY AMENDMENTS	
1. THE CALIFORNIA BUILDING STANDARDS COMMISSION	(BSC 05/15)
2. THE DIVISION OF THE STATE ARCHITECT – ACCESS COMPLIANCE	(DSA/AC 01/15)
3. THE DIVISION OF THE STATE ARCHITECT – STRUCTURAL SAFETY	(DSA/SS 02/15)
4. THE DEPARTMENT OF HOUSING AND COMMUNITY DEVELOPMENT-(NON-ACCESSIBILITY)	(HCD 03/15)
5. THE OFFICE OF STATE WIDE HEALTH PLANNING AND DEVELOPMENT – NON-STRUCTURAL	(OSHPD 02/15)
6. THE OFFICE OF STATE WIDE HEALTH PLANNING AND DEVELOPMENT - STRUCTURAL	(OSHPD 04/15)
7. THE OFFICE OF THE STATE FIRE MARSHAL	(SFM 06/15)
II) 2015 INTERNATIONAL EXISTING BUILDING CODE STATE AGENCY AMENDMENTS	
8. THE CALIFORNIA BUILDING STANDARDS COMMISSION	(BSC 06/15)
9. THE DIVISION OF THE STATE ARCHITECT – ACCESS COMPLIANCE	(DSA/AC 02/15)
10. THE DIVISION OF THE STATE ARCHITECT – STRUCTURAL SAFETY	(DSA/AC 03/15)
11. THE DEPARTMENT OF HOUSING AND COMMUNITY DEVELOPMENT-(NON-ACCESSIBILITY)	(HCD 04/15)
12. THE OFFICE OF THE STATE FIRE MARSHAL	(SFM 05/15)

Disclaimer: All Final Express Terms for the above mentioned agencies are available and were obtained from the Building Standards Commission at the following links:
http://www.bsc.ca.gov/Rulemaking/adoptcycle/2015CodeAdoptionCycle/ApprovedStandardsDecember2015.aspxhttp://www.bsc.ca.gov/Rulemaking/adoptcycle/2015CodeAdoptionCycle/ApprovedStandardsJanuary2016.aspx

FINAL EXPRESS TERMS
FOR
PROPOSED BUILDING STANDARDS
OF THE
CALIFORNIA BUILDING STANDARDS COMMISSION

REGARDING PROPOSED CHANGES TO
CALIFORNIA BUILDING CODE
CALIFORNIA CODE OF REGULATIONS, TITLE 24, PART 2

(The State agency shall draft the regulations in plain, straightforward language, avoiding technical terms as much as possible and using a coherent and easily readable style. The agency shall draft the regulation in plain English. A Notation: shall follow the express terms of each regulation listing the specific statutes authorizing the adoption and listing specific statutes being implemented, interpreted, or made specific. (PART 1 – ADMINISTRATIVE CODE)

LEGEND FOR EXPRESS TERMS
1. Existing California amendments or code language being modified are in italics when they appear in the model code text: All such language appears in *italics*, modified language is underlined.
2. New California amendments: All such language appears *underlined and in italics*.
3. Repealed text: All such language appears in ~~strikeout~~.
4. Information for the reader is shown as *[bracketed and in italics].*

FINAL EXPRESS TERMS

ITEM 1. CBSC proposes to bring forward existing California amendments in Chapter 1, Division I, Section 1.1 General, from the 2013 California Building Code for adoption into the 2016 California Building Code with additional amendments as follows:

CHAPTER 1
SCOPE AND ADMINISTRATION
DIVISION I
CALIFORNIA ADMINISTRATION

SECTION 1.1
GENERAL

1.1.1 ***Title.*** *These regulations shall be known as the California Building Code, may be cited as such and will be referred to herein as "this code." The California Building Code is Part 2 of ~~twelve~~ thirteen parts of the official compilation and publication of the adoption, amendment and repeal of building regulations to the California Code of Regulations, Title 24, also referred to as the California Building Standards Code. This part incorporates by adoption the ~~2012~~ 2015 International Building Code of the International Code Council with necessary California amendments.*

1.1.2 ***Purpose.*** *The purpose of this code is to establish the minimum requirements to safeguard the public health, safety and general welfare through structural strength, means of egress facilities, stability, access to persons with disabilities, sanitation, adequate lighting and ventilation and energy conservation; safety to life and property from fire and other hazards attributed to the built environment; and to provide safety to fire fighters and emergency responders during emergency operations.*

1.1.3 Scope. *The provisions of this code shall apply to the construction, alteration, movement, enlargement, replacement, repair, equipment, use and occupancy, location, maintenance, removal and demolition of every building or structure or any appurtenances connected or attached to such buildings or structures throughout the State of California.*

1.1.3.1 Nonstate-regulated buildings, structures and applications. *Except as modified by local ordinance pursuant to Section 1.1.8, the following standards in the California Code of Regulations, Title 24, Parts 2, 2.5, 3, 4, 5, 6, 9, 10 and 11 shall apply to all occupancies and applications not regulated by a state agency.*

1.1.3.2 State-regulated buildings, structures and applications. *The model code, state amendments to the model code, and/or state amendments where there are no relevant model code provisions shall apply to the following buildings, structures, and applications regulated by state agencies as specified in Sections 1.2 through 1.14, except where modified by local ordinance pursuant to Section 1.1.8. When adopted by a state agency, the provisions of this code shall be enforced by the appropriate enforcing agency, but only to the extent of authority granted to such agency by the state legislature.*

Note: See ~~Preface~~ "How to Distinguish Between Model Code Language and California Amendments" in the front of the code.

1. *State-owned buildings, including buildings constructed by the Trustees of the California State University, and to the extent permitted by California laws, buildings designed and constructed by the Regents of the University of California, and regulated by the Building Standards Commission. See Section 1.2 for additional scope provisions.*

2. *Local detention facilities regulated by the Board of State and Community Corrections ~~Corrections Standards Authority~~. See Section 1.3 for additional scope provisions.*

3. *Barbering, cosmetology or electrolysis establishments, acupuncture offices, pharmacies, veterinary facilities and structural pest control locations regulated by the Department of Consumer Affairs. See Section 1.4 for additional scope provisions.*

4. *~~Energy efficiency standards regulated by the~~ Section 1.5 reserved for the California Energy Commission. ~~See Section 1.5 for additional scope provisions.~~*

5. *Dairies and places of meat inspection regulated by the Department of Food and Agriculture. See Section 1.6 for additional scope provisions.*

6. *Organized camps, laboratory animal quarters, public swimming pools, radiation protection, commissaries serving mobile food preparation vehicles and wild animal quarantine facilities regulated by the Department of Public Health. See Section 1.7 for additional scope provisions.*

7. *Hotels, motels, lodging houses, ~~apartment houses~~ apartments, dwellings, dormitories, condominiums, shelters for homeless persons, congregate residences, employee housing, factory-built housing and other types of dwellings containing sleeping accommodations with or without common toilets or cooking facilities. See Section 1.8.2.1.1 for additional scope provisions.*

8. *Accommodations for persons with disabilities in buildings containing newly constructed covered multifamily dwellings, new common use spaces serving existing covered multifamily dwellings, additions to existing buildings where the addition alone meets the definition of "COVERED MULTIFAMILY DWELLING," and new common-use ~~spaces~~ areas serving new covered*

multifamily dwellings, which are regulated by the Department of Housing and Community Development. See Section 1.8.2.1.2 for additional scope provisions.

. . .

16. Section 1.13 reserved for ~~Graywater systems regulated by~~ the Department of Water Resources. ~~See Section 1.13 for additional scope provisions.~~

. . .

1.1.7 Order of precedence and use.

1.1.7.1 Differences. *In the event of any differences between these building standards and the standard reference documents, the text of these building standards shall govern.*

1.1.7.2 Specific provisions. *Where a specific provision varies from a general provision, the specific provision shall apply.*

1.1.7.3 Conflicts. *When the requirements of this code conflict with the requirements of any other part of the California Building Standards Code, Title the most restrictive requirements shall prevail.*

1.1.7.3.1 Detached one-and two-family dwellings. *Detached one-and two-family dwellings, efficiency dwelling units, lodging houses, live/work units, townhouses not more than three stories above grade plane in height with a separate means of egress, and their accessory structures, may be designed and constructed in accordance with this code or the California Residential Code, but not both, unless the proposed structure(s) or element(s) exceed the design limitations established in the California Residential Code, and the code user is specifically directed by the California Residential Code to use this code.*

1.1.8 City, county, or city and county amendments, additions or deletions. *The provisions of this code do not limit the authority of city, county, or city and county governments to establish more restrictive and reasonably necessary differences to the provisions contained in this code pursuant to complying with Section 1.1.8.1. The effective date of amendments, additions or deletions to this code by a city, county, or city and county filed pursuant to Section 1.1.8.1 shall be the date filed. However, in no case shall the amendments, additions or deletions to this code be effective any sooner than the effective date of this code. Local modifications shall comply with Health and Safety Code Section 18941.5 for Building Standards Law, Health and Safety Code Section 17958 for State Housing Law or Health and Safety Code Section 13869.7 for Fire Protection Districts.*

1.1.8.1 Findings and filings.

1. The city, county, or city and county shall make express findings for each amendment, addition or deletion based upon climatic, topographical or geological conditions.

Exception: Hazardous building ordinances and programs mitigating unreinforced masonry buildings.

2. The city, county, or city and county shall file the amendments, additions or deletions expressly marked and identified as to the applicable findings. Cities, counties, cities and counties, and fire departments shall file the amendments, additions or deletions, and the findings with the California Building Standards Commission at 2525 Natomas Park Drive, Suite 130, Sacramento, CA 95833.

3. Findings prepared by fire protection districts shall be ratified by the local city, county or city and county and filed with the California Department of Housing and Community Development, Division

of Codes and Standards, P. 0. Box 1407, Sacramento, CA 95812-1407 or ~~1800 3rd Street, Room 260, Sacramento, CA 95811~~ 2020 West El Camino Avenue, Suite 250, Sacramento, CA 95833-1829.

1.1.8.2 Locally adopted energy standards – California Energy Code, Part 6

In addition to the provisions of Section 1.1.8.1 of this Part, the provisions of this section shall apply to a city, county, and city and county adopting local energy standards applicable to buildings and structures subject to the California Energy Code, Part 6.

Applicable provisions of Public Resources Code Section 25402.1(h)(2) and applicable provisions of Section 10-106, Chapter 10 of the California Administrative Code, Part 1 apply to locally adopted energy standards amending the California Energy Code, Part 6.

1.1.9 Effective date of this code. *Only those standards approved by the California Building Standards Commission that are effective at the time an application for building permit is submitted shall apply to the plans and specifications for, and to the construction performed under, that permit. For the effective dates of the provisions contained in this code, see the History Note page of this code.*

1.1.10 Availability of codes. *At least one complete copy each of Titles 8, 19, 20, 24 and 25 with all revisions shall be maintained in the office of the building official responsible for the administration and enforcement of this code. Each state department concerned and each city, county, or city and county shall have an up-to-date copy of the code available for public inspection. See Health and Safety Code Section 18942 (~~d~~ e) (1) and (2).*

. . .

Notation:
Authority: Government Code §14617; Health and Safety Code § 16600, 18928, 18930.5, 18934.5, 18934.6, 18938 & 18940.5
References: Government Code §14617; Health and Safety Code §§16600 & 18901-18949

ITEM 2. CBSC proposes to bring forward existing California amendments in Chapter 1, Division I, Section 1.2 Building Standards Commission, from the 2013 California Building Code for adoption into the 2016 California Building Code with additional amendments as follows:

SECTION 1.2
BUILDING STANDARDS COMMISSION

1.2.1 BSC. *Specific scope of application of the agency responsible for enforcement, the enforcement agency and the specific authority to adopt and enforce such provisions of this code, unless otherwise stated.*

1. State buildings for all occupancies.

Application-*State buildings (all occupancies), including buildings constructed by the Trustees of the California State University (CSU) and the Regents of the University of California (UC) where no state agency has the authority to adopt building standards applicable to such buildings.*

Enforcing agency-*State or local agency specified by the applicable provisions of law.*

Authority cited-*Health and Safety Code Section 18934.5.*

Reference-*Health and Safety Code, Division 13, Part 2.5, commencing with Section 18901.*

2. University of California, California State Universities and California Community Colleges.

Application-*Standards for lighting for parking lots and primary campus walkways at the University of California, California State Universities and California Community Colleges.*

Enforcing agency-*State or local agency specified by the applicable provisions of law.*

Authority cited-*Government Code Section 14617.*

Reference-*Government Code Section 14617.*

3. Existing state-owned buildings, including those owned by the University of California and by the California State University.

Application-*Building seismic retrofit standards including abating falling hazards of structural and nonstructural components and strengthening of building structures. See also Division of the State Architect.*

Enforcing agency-*State or local agency specified by the applicable provisions of law. Authority cited-Health and Safety Code Section 16600.*

Authority cited- *Health and Safety Code Sections 16600.*

Reference-*Health and Safety Code Sections 16600 through 16604.*

4. Unreinforced masonry-bearing wall buildings.

Application-*Minimum seismic strengthening standards for buildings specified in Appendix Chapter A1 of the California Existing Building Code, except for buildings subject to building standards pursuant to Health and Safety Code (commencing) with Section 17910.*

Enforcing agency-*State or local agency specified the applicable provisions of law.*

Authority cited-*Health and Safety Code Section 18934.~~6.~~7*

Reference-~~*Health and Safety Code Sections 18901 through 18949.*~~ *Health and Safety Code, Division 13, Part 2.5, commencing with Section 18901.*

1.2.1.1 State building. *For purposes of this code, a "state building" is a structure for which a state agency or state entity has authority to construct, alter, enlarge, replace, repair or demolish.*

1.2.1.2 Enforcement. *[CSU, UC, Judicial Council and California Department of Corrections and Rehabilitation ~~CDCR~~] State agencies or state entities authorized to construct state buildings may appoint a building official who is responsible to the agency for enforcement of the provisions of the California Building Standards Code.*

Exception: *State buildings regulated by other sections of this code remain the enforcement responsibility of the designated entities.*

1.2.1.3 Enforcement. Reserved for DGS.

~~*1.2.3*~~ *1.2.1.4* ***Adopting agency identification.*** *The provisions of this code applicable to buildings identified in this section will be identified in the Matrix Adoption Tables under the acronym* ***BSC.***

1.2.2 ***BSC-CG.*** *Specific scope of application of the agency responsible for enforcement, the enforcement agency and the specific authority to adopt and enforce such provisions of this code, unless otherwise stated.*

Application*-All occupancies where no state agency has the authority to adopt green building standards applicable to those occupancies.*

Enforcing agency*-State or local agency specified by the applicable provisions of law.*

Authority cited*-Health and Safety Code Sections 18930.5(a), 18938, and 18940.5.*

Reference*-Health and Safety Code, Division 13, Part 2.5, commencing with Section 18901.*

1.2.2.1 Adopting agency identification. *The provisions of this code applicable to buildings identified in this section will be identified in the Matrix Adoption Tables under the acronym* ***BSC-CG.***

~~*1.2.2*~~ *1.2.3* ***Alternative materials, design and methods of construction and equipment.*** *The provisions this code are not intended to prevent the installation of any material or to prohibit any design or method of construction not specifically prescribed by this code, provided that any such alternative has been approved. An alternative material, design or method of construction shall be approved where the building official finds that the proposed design is satisfactory and complies with the intent of the provisions of this code, and that the material, method or work offered is, for the purpose intended, at least the equivalent of that prescribed in this code in quality, strength, effectiveness, fire resistance, durability and safety.*

~~*1.2.2.1*~~ *1.2.3.1* ***Research reports.*** *Supporting data, where necessary to assist in the approval of materials or assemblies not specifically provided for in this code, shall consist of valid research reports from approved sources.*

~~*1.2.2.2*~~ *1.2.3.2* ***Tests.*** *Whenever there is insufficient evidence of compliance with the provisions of this code, or evidence that a material or method does not conform to the requirements of this code, or in order to substantiate claims for alternative materials or methods, the building official shall have the authority to require tests as evidence of compliance to be made at no expense to the jurisdiction. Test methods shall be as specified in this code or by other recognized test standards. In the absence of recognized and accepted test methods, the building official shall approve the testing procedures. Tests shall be performed by an approved agency. Reports of such tests shall be retained by the building official for the period required for retention of public records.*

Notation:
Authority: Government Code §14617; Health and Safety Code § 16600, 18928, 18930.5, 18934.5, 18934.6, 18938 & 18940.5

References: Government Code §14617; Health and Safety Code §§16600 & 18901-18949

ITEM 3. CBSC does not adopt Chapter 1 SCOPE AND ADMINISTRATION, but proposes to carry forward existing editorial amendments and make additional editorial amendments for code consistency.

DIVISION II
SCOPE AND ADMINISTRATION

Note: *Sections adopted or amended by state agencies are specifically indicated by and agency banner.* ~~*or indicated in the Matrix Adoption Table.*~~

Notation:
Authority: Government Code §14617; Health and Safety Code § 16600, 18928, 18930.5, 18934.5, 18934.6, 18938 & 18940.5
References: Government Code §14617; Health and Safety Code §§16600 & 18901-18949

ITEM 4. CBSC proposes to adopt 2015 IBC, Chapter 2 Definitions.

CHAPTER 2

. . .

Notation:
Authority: Health and Safety Code §18928 & 18934.5
References: Health and Safety Code §§18928, 18928.1, & 18934.5

ITEM 5. CBSC proposes to adopt Chapters 3, 4, 5, 6, 7 of the 2015 IBC without amendment.

CHAPTER 3
USE AND OCCUPANCY CLASSIFICATION

. . .

CHAPTER 4
SPECIAL DETAILED REQUIREMENTS ON USE AND OCCUPANCY

. . .

CHAPTER 5
GENERAL BUILDING HEIGHTS AND AREAS

. . .

CHAPTER 6
TYPES OF CONSTRUCTION

. . .

CHAPTER 7
FIRE AND SMOKE PROTECTION FEATURES

. . .

Notation:
Authority: Health and Safety Code §18928 & 18934.5

References: Health and Safety Code §§18928, 18928.1, & 18934.5

ITEM 6. CBSC proposes to adopt Chapter 8 Interior Finishes of the 2015 IBC with new amendments.

CHAPTER 8
INTERIOR FINISHES

SECTION 801
GENERAL

801.1 Scope. The provisions of this chapter shall govern the use of materials used as interior finishes, trim, and decorative materials. *[BSC-CG] See California Green Building Standards Code, Chapter 5, Division 5.5 for additional finish material pollutant control requirements.*

. . .

Notation:
Authority: Health and Safety Code §18928 & 18934.5 18940.5
Reference: Health and Safety Code §§18928, 18928.1, 18934.5, 18938(b) & 18940.5

ITEM 7. CBSC proposes to adopt Chapters 9 and 10 of the 2015 IBC without amendment.

CHAPTER 9
FIRE PROTECTION SYSTEMS

. . .

CHAPTER10
MEANS OF EGRESS

. . .

Notation:
Authority: Health and Safety Code §18928 & 18934.5
References: Health and Safety Code §§18928, 18928.1, & 18934.5

ITEM 8. CBSC does not adopt Chapter 11 Accessibility of the 2015 IBC.

CHAPTER 11
ACCESSIBILITY

Notation:
Authority: Health and Safety Code §18928 & 18934.5
References: Health and Safety Code §§18928, 18928.1, & 18934.5

ITEM 9. CBSC proposes to adopt Chapter 12 Interior Environment of the 2015 IBC with new amendments and carry forward the existing amendment to Section 1205.7 (formerly 1205.6) Campus lighting for parking facilities and primary walkways at California state universities, colleges and community colleges and its sub-sections.

CHAPTER 12
INTERIOR ENVIRONMENT

. . .

SECTION 1205
LIGHTING

. . .

1205.6 Light pollution reduction. [BSC-CG] *See California Green Building Standards Code, Chapter 5, Division 5.1 for additional light pollution reduction requirements.*

~~1205.6~~ 1205.7 Campus lighting for parking facilities and primary walkways at California state universities, colleges and community colleges. [BSC] *Artificial light shall be provided for parking facilities and primary walkways at California State Universities, colleges, and community colleges in accordance with provisions of this subsection. This subsection shall not apply to the University of California unless the Regents of the University of California, by resolution, make it applicable.*

~~1205.6.1~~ 1205.7.1 Lighting Requirements. *Based on the recommendations of the most current edition of the Illumination Engineering Society lighting handbook, for the following lighting standards shall be used for all new construction of open parking facilities, covered parking facilities and primary walkways:*

1. Open and covered parking facilities.
1.1 Medium-level activity usage when medium usage is present.
1.2 High-level activity usage when high usage is present.

2. Primary campus walkways.
2.1 Medium-level activity usage when medium usage is present.
2.2 High-level activity usage when high usage is present

SECTION 1207
SOUND TRANSMISSION

. . .

1207.5 Acoustical control. [BSC-CG] *See California Green Building Standards Code, Chapter 5, Division 5.5 for additional sound transmission requirements.*

. . .

Notation:
Authority: Government Code §14617, Health and Safety Code §18928, 18934.5 & 18940.5
Reference: Government Code §14617, Health and Safety Code §§18928, 18928.1, 18934.5, 18938(b) & 18940.5

ITEM 10. CBSC does not adopt Chapter 13 Energy Efficiency of the 2015 IBC.

CHAPTER 13
ENERGY EFFICIENCY

Notation:
Authority: Health and Safety Code §18928 & 18934.5
References: Health and Safety Code §§18928, 18928.1, & 18934.5

ITEM 11. CBSC proposes to adopt Chapter 14 Exterior Walls of the 2015 IBC with amendments.

CHAPTER 14
EXTERIOR WALLS

. . .

1403.2.1 [BSC-CG] See California Green Building Standards Code, Chapter 5, Division 5.4 for additional weather protection requirements.

. . .

Notation:
Authority: Health and Safety Code §18928, 18934.5 & 18940.5
References: Health and Safety Code §§18928, 18928.1, 18934.5 & 18940.5

ITEM 12. CBSC proposes to adopt Chapter 15 Roof Assemblies and Roof Top Structures of the 2015 IBC with amendments. Carry forward the existing amendment to Section 1510.7.1 (Formerly 1509.7.1) Wind resistance.

CHAPTER 15
ROOF ASSEMBLIES AND ROOF TOP STRUCTURES

. . .

SECTION 1510 (FORMERLY 1509)
ROOFTOP STRUCTURES

. . .

~~1509.7.1~~ 1510.7.1 **Wind resistance**. Rooftop mounted photovoltaic panels and modules shall be designed for component and cladding wind loads in accordance with Chapter 16 using an effective wind area based on the dimensions of a single unit frame.

> ***Exception: [BSC]*** *The effective wind area shall be in accordance with Chapter 16 and ASCE 7 Section 26.2.*

. . .

Notation:
Authority: Health and Safety Code §18928 & 18934.5
References: Health and Safety Code §§18928, 18928.1, & 18934.5

ITEM 13. CBSC adopts Chapter 16 Structural Design of the 2015 IBC with new amendments. Carry forward existing California amendments with minimal changes to Section 1613.1.2 and 1613.1.3 for state-owned buildings. Repeal Section 1613.5 and its sub-section which amended ASCE 7.

CHAPTER 16
STRUCTURAL DESIGN

SECTION 1613
EARTHQUAKE LOADS

1613.1 Scope. Every structure, and portion thereof,...

. . .

1613.1.2. State-owned buildings. ***[BSC]*** *State-owned buildings, including those of the University of California, CSU and Judicial Council, shall not be constructed where any portion of the foundation would be within a mapped area of earthquake-induced liquefaction of landsliding or within 50 feet of a mapped fault rupture hazard as established by Section 1803.7*

1613.1.3 Existing state buildings. ***[BSC]*** *Additions, alterations, repairs, or change of occupancy category of existing buildings shall be in accordance with the California Existing Building Code, Part 10. ~~Chapter 34.~~*

. . .

~~***1613.5 [BSC] Modifications to ASCE 7.*** *The text of ASCE 7 shall be modified as indicated in Sections 1613.5.1 through 1613.5.2.*~~

~~***1613.5.1 [BSC] Modify ASCE 7 DEFINITIONS*** *as follows:*~~

~~**1.2 DEFINITIONS.**~~

~~***BALLASTED PHOTOVOLTAIC SYSTEM:*** *A roof mounted system composed of solar photovoltaic panels and supporting members that are unattached or partially attached to the roof and must rely on its weight, aerodynamics and friction to counter the effect of wind and seismic forces.*~~

~~***1613.5.2 [BSC] Modify ASCE 7 Section 13.4*** *as follows:*~~

~~***Section 13.4 NONSTRUCTURAL COMPONENT ANCHORAGE.***~~

~~*Components and their supports shall be attached (or anchored) to the structure in accordance with the requirements of this section and the attachment shall satisfy the requirements for the parent material as set forth elsewhere in this standard. Component attachments shall be bolted, welded, or otherwise positively fastened without consideration of frictional resistance produced by the effects of gravity. A continuous load path of sufficient strength and stiffness between the component and the supporting structure shall be provided. Local elements of the structure including connections shall be designed and constructed for the component forces where they control the design of the elements or their connections. The component forces shall be those determined in Section 13.3.1, except that modifications to Fp and R, due to anchorage conditions need not be considered. The design documents shall include sufficient information relating to the attachments to verify compliance with the requirements of this section*~~

~~***Exception:*** *Ballasted photovoltaic systems when designed is based on Section 13.4.7 and approved by the enforcing agency.*~~

~~*13.4.7. Solar PV panels or modules installed on a roof as a balasted system need not be rigidly attached to the roof or supporting structure. Ballasted systems shall be designed and installed only on roofs with slopes 1 inch per foot or less. The ballasted system shall be designed to resist sliding and uplift resulting from lateral and vertical forces, using a coefficient of friction determined by acceptable engineering practices. In sites where the Seismic Design category is C or above, the system shall be designed to accommodate seismic displacement determined by approved analysis or shake table testing, using input motions consistent with ASCE 7 lateral and vertical seismic forces for non-structural components on roofs.*~~

Notation:
Authority: Health and Safety Code §18928 & 18934.5

References: Health and Safety Code §§18928, 18928.1, & 18934.5

ITEM 14. CBSC proposes to adopt Chapter 17 Special Inspections and Tests of the 2015 IBC without new amendments. Carry forward existing California amendments to Sections 1704.2.3 and 1707.1. See Item 26.

Notation:
Authority: Health and Safety Code §18928 & 18934.5
References: Health and Safety Code §§18928, 18928.1, & 18934.5

ITEM 15. CBSC proposes to adopt Chapter 18 Soils and Foundation of the 2015 IBC without new amendments. Carry forward existing California amendments to Section 1810.3.10.4 Seismic Reinforcement.

Notation:
Authority: Health and Safety Code §18928 & 18934.5
References: Health and Safety Code §§18928, 18928.1, & 18934.5

ITEM 16. CBSC proposes to adopt Chapter 19 Concrete of the 2015 IBC with amendments. CBSC proposes to repeal the amendment to the 2013 CBC, Section 1905.1.8 (Formerly 1905.1.9) American Concrete Institute (ACI), Section D.3.3 and adopt the 2015 IBC Section 1905.1.8, ACI 318, Section 17.2.3 with minor amendments.

CHAPTER 19
CONCRETE

. . .

1905.1.3 ACI 318, Section 18.5 (formerly 21.4).
Modify ACI 318, (formerly Section 21.4), by adding new Section 18.5.2.2 and renumbering existing Section 18.5.2.2 and 18.5.2.3 to become 18.5.2.3 and 18.5.2.4, respectively.

18.5.2.2 - Connections that are designed to yield shall be capable of maintaining 80 percent of their design strength at the deformation induced by the design displacement or shall use Type 2 mechanical splices.

18.5.2.3 - Elements of the connection that are not designed to yield shall develop at least 1.5 S_y.

~~*18.5.2.4 - Wall piers in Seismic Design Category D, E or F shall comply with Section 1905.1.4 of the California Building Code.*~~

18.5.2.4 – In structures assigned to SDC D, E or F, wall piers sha;; be designed in accordance with 18.10.8 or 18.14 in ACI 318.

. . .

1905.1.8 (formerly) ~~***1905.1.9 ACI 318, Section D.3.3.*** *Modify ACI 318, Sections D.3.3.4.2, D.3.3.4.3 (d) and D.3.3.5.2 to read as follows:*~~

~~D.3.3.4.2 - Where the tensile component of the strength-level earthquake force applied to anchors exceeds 20 percent of the total factored anchor tensile force associated with the same load combination, anchors and their attachments shall be designed in accordance with Section D.3.3.4.3. The anchor design tensile strength shall be determined in accordance with Section D.3.3.4.4.~~

~~**Exception:** Anchors designed to resist wall out-of-plane forces with design strengths equal to or greater than the force determined in accordance with ASCE 7 Equation 12.11-1 or 12.14-10 and Section 1604A.8.2 of this code shall be deemed to satisfy Section D.3.3.4.3 (d).~~

~~D.3.3.4.3 (d) - The anchor or group of anchors shall be designed for the maximum tension obtained from design load combinations that include E, with E increased by Ω_0. The anchor design tensile strength shall be calculated from Section D.3.3.4.4.~~

~~D.3.3.5.2 – Where the shear component of the strength-level earthquake force applied to anchors exceeds 20 percent of the total factored anchor shear force associated with the same load combination, anchors and their attachments shall be designed in accordance with Section D.3.3.5.3. The anchor design shear strength for resisting earthquake forces shall be determined in accordance with Section D.6.~~

~~**Exceptions:**~~

~~1. For the calculation of the in-plane shear strength of anchor bolts attaching wood sill plates of bearing or non-bearing walls of light-frame wood structures to foundations or foundation stem walls, the in-plane design shear strength in accordance with Sections D.6.2 and D.6.3 need not be computed and Section D.3.3.5.3 shall be deemed to be satisfied provided all of the following are met:~~

~~1.1. The allowable in-plane shear strength of the anchor is determined in accordance with AF&PA NDS Table 11E for lateral design values parallel to grain.~~

~~1.2. The maximum anchor nominal diameter is 5/8 inches (16 mm).~~

~~1.3. Anchor bolts are embedded into concrete a minimum of 7 inches (178 mm).~~

~~1.4. Anchor bolts are located a minimum of 1 3/4 inches (45 mm) from the edge of the concrete parallel to the length of the wood sill plate.~~

~~1.5. Anchor bolts are located a minimum of 15 anchor diameters from the edge of the concrete perpendicular to the length of the wood sill plate.~~

~~1.6. The sill plate is 2-inch or 3-inch nominal thickness.~~

~~2. For the calculation of the in-plane shear strength of anchor bolts attaching cold-formed steel track of bearing or non-bearing walls of anchor bolts attaching cold-formed steel track of bearing or non-bearing walls of light-frame construction to foundations or foundation stem walls the in-plane design shear strength in accordance with Sections D.6.2 and D.6.3 need not be computed and Section D.3.3.5.3 shall be deemed to be satisfied provided all of the following are met:~~

~~2.1. The maximum anchor nominal diameter is 5/8 inches (16 mm).~~

~~2.2. Anchors are embedded into concrete a minimum of 7 inches (178 mm).~~

~~2.3. Anchors are located a minimum of 1 3/4 inches (45 mm) from the edge of the concrete parallel to the length of the track.~~

~~2.4. Anchors are located a minimum of 15 anchor diameters from the edge of the concrete perpendicular to the length of the track.~~
~~2.5. The track is 33 to 68 mil designation thickness.~~

~~Allowable in-plane shear strength of exempt anchors, parallel to the edge of concrete shall be permitted to be determined in accordance with AISI S100 Section E3.3.1.~~

~~3. In light-frame construction, bearing or nonbearing walls, shear strength of concrete anchors less than or equal to 5/8 inch [16mm] in diameter of sill plate or track to foundation or foundation stem wall need not satisfy~~
~~Section D.3.3.5.3 (a) through (c) when the design strength of the anchors is determined in accordance with Section D.6.2.1(c).~~

1905.1.8 (Formerly 1905.1.9) ACI 318, Section 17.2.3. Modify ACI 318, Sections 17.2.3.4.2, 17.2.3.4.3(d) and 17.2.3.5.2 to read as follows:

17.2.3.4.2 - Where the tensile component of the strength-level earthquake force applied to anchors exceeds 20 percent of the total factored anchor tensile force associated with the same load combination, anchors and their attachments shall be designed in accordance with Section 17.2.3.4.3. The anchor design tensile strength shall be determined in accordance with Section 17.2.3.4.4.

Exception: Anchors designed to resist wall out-of-plane forces with design strengths equal to or greater than the force determined in accordance with ASCE 7 Equation 12.11- or 12.14-10 <u>and</u> <u>*Section 1604.8.2 of this code*</u> shall be deemed to satisfy Section D.3.3.4.3 (d).

17.2.3.4.3(d) - The anchor or group of anchors shall be designed for the maximum tension obtained from design load combinations that include **E**, with **E** increased by Ω_0. The anchor design tensile strength shall be calculated from Section 17.2.3.4.4.

17.2.3.5.2 – Where the shear component of the strength-level earthquake force applied to anchors exceeds 20 percent of the total factored anchor shear force associated with the same load combination, anchors and their attachments shall be designed in accordance with Section 17.2.3.5.3. The anchor design shear strength for resisting earthquake forces shall be determined in accordance with Section 17.5.

Exceptions:

1. For the calculation of the in-plane shear strength of anchor bolts attaching wood sill plates of bearing or non-bearing walls of light-frame wood structures to foundations or foundation stem walls, the in-plane design shear strength in accordance with Sections 17.5.2 and 17.5.3 need not be computed and Section 17.2.3.5.3 shall be deemed to be satisfied provided all of the following are met:

1.1. The allowable in-plane shear strength of the anchor is determined in accordance with AWC NDS Table 11E for lateral design values parallel to grain.

1.2. The maximum anchor nominal diameter is $^5/_8$ inches (16 mm).

1.3. Anchor bolts are embedded into concrete a minimum of 7 inches (178 mm).

1.4. Anchor bolts are located a minimum of $1\frac{3}{4}$ inches (45 mm) from the edge of the concrete parallel to the length of the wood sill plate.

1.5. Anchor bolts are located a minimum of 15 anchor diameters from the edge of the concrete perpendicular to the length of the wood sill plate.

1.6. The sill plate is 2-inch or 3-inch nominal thickness.

2. For the calculation of the in-plane shear strength of anchor bolts attaching cold-formed steel track of bearing or non-bearing walls of anchor bolts attaching cold-formed steel track of bearing or non-bearing walls of light-frame construction to foundations or foundation stem walls the in-plane design shear strength in accordance with Sections 17.5.2 and 17.5.3 need not be computed and Section 17.2.3.5.3 shall be deemed to be satisfied provided all of the following are met:

2.1. The maximum anchor nominal diameter is $\frac{5}{8}$ inches (16 mm).

2.2. Anchors are embedded into concrete a minimum of 7 inches (178 mm).

2.3. Anchors are located a minimum of $1\frac{3}{4}$ inches (45 mm) from the edge of the concrete parallel to the length of the track.

2.4. Anchors are located a minimum of 15 anchor diameters from the edge of the concrete perpendicular to the length of the track.

2.5. The track is 33 to 68 mil designation thickness.

Allowable in-plane shear strength of exempt anchors, parallel to the edge of concrete shall be permitted to be determined in accordance with AISI S100 Section E3.3.1.

3. In light-frame construction, bearing or nonbearing walls, shear strength of concrete anchors less than or equal to **1 inch** [16mm] in diameter of sill plate or track to foundation or foundation stem wall need not satisfy Section 17.2.3.5.3(a) through (c) when the design strength of the anchors is determined in accordance with Section 17.5.2.1(c).

Notation:
Authority: Health and Safety Code § 16600 18928 & 18934.5
References: Health and Safety Code §§18928, 18928.1, 18934.5 & 18938(b)

<u>ITEM 17.</u> CBSC proposes to adopt Chapters 20, 21, 22, 23, 24, 25, and 26 of the 2015 IBC without new amendments. See Item 26 for existing California amendments being carried forward.

CHAPTER 20
ALUMINUM

. . .

CHAPTER 21
MASONRY

. . .

CHAPTER 22
STEEL

. . .

CHAPTER 23
WOOD

. . .

CHAPTER 24
GLASS AND GLAZING

. . .

CHAPTER 25
GYPSUM BOARD, GYPSUM PANEL PRODUCTS AND PLASTER

. . .

CHAPTER 26
PLASTIC

. . .

Notation:
Authority: Health and Safety Code §18928 & 18934.5
References: Health and Safety Code §§18928, 18928.1, & 18934.5

ITEM 18. CBSC does not adopt Chapters 27, 28, and 29. See Item 26 for existing California editorial amendments being carried forward.

Chapter 27
ELECTRICAL

. . .

Chapter 28
MECHANICAL SYSTEMS

. . .

Chapter 29
PLUMBING SYSTEMS

. . .

Notation:
Authority: Health and Safety Code §18928 & 18934.5
References: Health and Safety Code §§18928, 18928.1, & 18934.5

ITEM 19. CBSC proposes to adopt Chapter 30 Elevators and Conveying Systems of the 2015 IBC without amendment.

ITEM 20. CBSC does not adopt Chapter 31; however, CBSC proposes to carry forward existing amendments to Chapter 31 Special Construction. Sections 3109.4.4 through 3109.6 contain provisions for private swimming pools (statewide). See Item 26 for existing California amendments being carried forward.

ITEM 21. CBSC proposes to adopt Chapter 32 Encroachments into the Public Right-of-Way of the 2015 IBC and carry forward existing amendment. See Item 26 for editorial amendment being carried forward.

ITEM 22. CBSC proposes to adopt Chapter 33 Safeguards during Construction of the 2015 IBC without amendment.

ITEM 23. CBSC proposes to repeal existing amendments to Chapter 34 Existing Structures as its contents were moved to the 2015 International Existing Building Code. CBSC will relocate amendments of Chapter 34, CBC, to the 2016 California Existing Building Code (CEBC), Part 10. The rulemaking for the CEBC, Part 10 will be heard by the SD/LF Code Advisory Committee.

CHAPTER 34
RESERVED
(formerly EXISTING STRUCTURES)

Action taken during the 2012 Code Development process removed Chapter 34, Existing Structures, from the IBC. The provisions of this chapter *and California amendments* are contained in the ~~International~~ *California* Building Code. See Section 101.4.7

~~SECTION 3401~~
~~GENERAL~~

~~**3401.1 Scope.** The provisions of this chapter shall control the alteration, repair, addition and change of occupancy of existing buildings and structures, *including state-regulated structures in accordance with sections 3401.1.1 and 3401.1.2.*~~

...

~~***3401.1.1 Existing state-owned structures.*** *The provisions of Sections 3417 through 3422 establish minimum standards for earthquake evaluation and design for retrofit of existing state-owned structures, including buildings owned by the University of California and the California State University.*~~

> ~~*The provisions of Section 3417 through 3422 may be adopted by a local jurisdiction for earthquake evaluation and design for retrofit of existing buildings.*~~

...

~~***3401.9 Dangerous conditions. [BSC]*** *Regardless of the extent of structural or nonstructural damage, the building official shall have the authority to require the elimination of conditions deemed dangerous.*~~

~~SECTION 3402~~
~~DEFINITIONS~~

~~**3402.1 Definitions.** The following terms are defined in Chapter 2:~~

~~**DANGEROUS.**~~

~~**EXISTING STRUCTURE.**~~

~~**PRIMARY FUNCTION.**~~

~~**SUBSTANTIAL STRUCTURAL DAMAGE.**~~

~~**TECHNICALLY INFEASIBLE.**~~

...

~~**SECTION 3403**~~
~~**ADDITIONS**~~

~~**3403.1 General.** Additions to any building or structure shall comply ...~~

> ~~***Exception:*** *For state-owned buildings, including those owned by the University of California and the California State University and the judicial council, the requirements of Sections 3403.3 and 3403.4 are replaced by the requirements of Sections 3417 through 3422.*~~

~~**SECTION 3404**~~
~~**ALTERATIONS**~~

~~**3404.1 General.** Except as provided by Section 3401.4 ...~~

> ~~**Exceptions:**~~
> ~~1. An existing...~~
> ~~2. Handrails ...~~
> ~~3. *For state-owned buildings, including those owned by the University of California and the California State University and the judicial council, the requirements of Sections 3404.3 through 3404.5 are replaced by the requirements of Sections 3417 through 3422.*~~

~~**SECTION 3405**~~
~~**REPAIRS**~~

~~**3405.1 General.** Buildings and structures, and parts thereof, shall be repaired in compliance with Section 3405 and 3401.2. Work on nondamaged components that is necessary for the required repair of damaged components shall be considered part of the repair and shall not be subject to the requirements for alterations in this chapter, Routine maintenance required by Section 3401.2, ordinary repairs exempt from permit in accordance with Section 105.2, and abatement of wear due to normal service conditions shall not be subject to the requirements for repairs in this section.~~

> ~~***Exception:*** *For state-owned buildings, including those owned by the University of California and the California State University and the judicial council, the requirements of Sections 3403.3 and 3403.4 are replaced by the requirements of Sections 3417 through 3422.*~~

...

~~**SECTION 3406**~~
~~**FIRE ESCAPES**~~

~~**3406.1 Where permitted.** Fire escapes shall be permitted only as provided for in Section 2406.1.1 through 3406.1.4.~~

~~**3406.1.1 New buildings. . . .**~~

. . .

~~**SECTION 3408**~~
~~**CHANGE OF OCCUPANCY**~~

~~**3408.1 Conformance.** No change shall be made in the use or occupancy of any building that would place the building in a different division of the same group of occupancies or in a different group of occupancies, unless such building is made to comply with the requirements . . .~~

~~***SECTION 3417***~~
~~***EARTHQUAKE EVALUATION AND DESIGN***~~
~~***FOR RETROFIT OF EXISTING BUILDINGS***~~

~~***3417.1 Purpose.***~~

~~***3417.1.1 Existing state-owned structures.*** *The provisions of Sections 3417 through 3423 establish minimum standards for earthquake evaluation and design for retrofit of existing state-owned structures, including buildings owned by the University of California and the California State University.*~~

~~*The provisions of Sections 3417 through 3423 may be adopted by a local jurisdiction for earthquake evaluation and design for retrofit of existing buildings.*~~

. . .

~~***3417.2 Scope.*** *All modifications, structurally connected additions and/or repairs to existing structures or portions thereof shall, at a minimum, be designed and constructed to resist the effects of seismic ground motions as provided in this section. The structural system shall be evaluated by a registered design professional and, if not meeting or exceeding the minimum seismic design performance requirements of this section, shall be retrofitted in compliance with these requirements.*~~

~~***Exception:*** *Those structures for which Section 3417.3 determines that assessment is not required, or for which Section 3417.4 determines that retrofit is not needed, then only the requirements of Section 3417.11 apply.*~~

~~***3417.3 Applicability.***~~

~~***3417.3.1 Existing state-owned buildings.*** *For existing state-owned structures including all buildings owned by the University of California and the California State University, the requirements of Section 3417 apply whenever the structure is to be retrofitted, repaired or modified and any of the following apply:*~~

~~*1. Total construction cost, not including cost of furnishings, fixtures and equipment, or normal maintenance, for the building exceeds 25 percent of the construction cost for the replacement of the existing building.*~~
~~*The changes are cumulative for past modifications to the building that occurred after adoption of the 1995 California Building Code and did not require seismic retrofit.*~~

~~*2. There are changes in risk category.*~~

~~*3. The modification to the structural components increases the seismic forces in or strength requirements of any structural component of the existing structure by more than 10 percent cumulative since the original construction, unless the component has the capacity to resist the*~~

~~increased forces determined in accordance with Section 3419. If the building's seismic base shear capacity has been increased since the original construction, the percent change in base shear may be calculated relative to the increased value.~~

~~4. Structural elements need repair where the damage has reduced the lateral-load-resisting capacity of the structural system by more than 10 percent.~~

~~5. Changes in live or dead load increase story shear by more than 10 percent.~~

****

~~**3417.4 Evaluation required.** If the criteria in Section 3417.3 apply to the project under consideration, the design professional of record shall provide an evaluation in accordance with Section 3417 to determine the seismic performance of the building in its current configuration and condition. If the structure's seismic performance as required by Section 3417.5 is evaluated as satisfactory and the peer reviewer(s), when Method B of Section 3421 is used, concur, then no structural retrofit is required.~~

~~**3417.5 Minimum seismic design performance levels for structural and nonstructural components.** Following the Notation:s of ASCE 41, the seismic requirements for design and assessment are based upon a prescribed Earthquake Hazard Level (BSE-1, BSE-2, BSE-R or BSE-C), a specified structural performance level (S-1 through S-5) and a non-structural performance level (N-A through N-E). The minimum seismic performance criteria are given in Table 3417.5 according to the Building Regulatory Authority and the Risk Category as determined in Chapter 16 or by the regulatory authority. The building shall be evaluated at both the Level 1 and Level 2 performance levels, and the more restrictive requirements shall apply.~~

~~Basic Safety Earthquake 2 (BSE-2) in ASCE 41 shall be same as Risk-Targeted Maximum Considered Earthquake (MCER) in ASCE 7. Probabilistic response spectra defining other Earthquake Hazard Levels shall be developed using site-specific ground motions in accordance with ASCE 7 Section 21.2 utilizing the Next Generation Attenuation (NGA) relations used for the 2008 USGS seismic hazards maps for Western United States (WUS). When supported by data and analysis, other NGA relations, that were not used for the 2008 USGS maps, shall be permitted as additions or substitutions. No fewer than three NGA relations shall be utilized. Response spectra shall incorporate the risk coefficient C_R per ASCE 7 Section 21.2.1.1~~

~~Ground-motion response history analysis shall be as set forth in ASCE 7 Chapter 16, Section 17.3 or Section 18.2.3.~~
~~**Exception:** If the floor area of an addition is greater than the larger of 50 per cent of the floor area of the original building or 1,000 square feet (93 m^2), then the Table 3417.5 entries for BSE-R and BSE-C are replaced by BSE-1 and BSE-2, respectively.~~

~~**TABLE 3417.5 SEISMIC PERFORMANCE REQUIREMENTS BY BUILDING REGULATORY AUTHORITY AND RISK CATEGORY. ALL BUILDINGS NOT REGULATED BY DSA ARE ASSIGNED AS "STATE-OWNED."**~~

		~~PERFORMANCE CRITERIA~~	
~~Building Regulatory Authority~~	~~Risk Category~~	~~Level 1~~	~~Level 2~~
~~State-Owned~~	~~I, II, III~~	~~BSE-R, S-3, N-D~~	~~BSE-C, S-5, N-E~~
~~State-Owned~~	~~IV~~	~~BSE-R, S-2, N-B~~	~~BSE-C, S-4, N-C~~
~~Division of the State Architect - Public schools~~	~~I~~	~~BSE-1,S-3,N-C~~	~~BSE-2,S-5, N-E~~
~~Division of the State Architect - Public schools~~	~~II, III~~	~~BSE-1, S-2, N-C~~	~~BSE-2, S-4, N-D~~
~~Division of the State Architect - Public schools~~	~~IV~~	~~BSE-1, S-2, N-C~~	~~BSE-2, S-4,N-C~~
~~Division of the State Architect - Community college~~	~~I, II, III~~	~~BSE-R, S-3, N-D~~	~~BSE-2, S-5, N-E~~
~~Division of the State Architect - Community college~~	~~IV~~	~~BSE-R, S-2, N-B~~	~~BSE-2, S-4, N-C~~

~~1. ASCE 41 provides acceptance criteria (e.g. m, rotation) for Immediate Occupancy (S1), Life Safety (S3), and Collapse Prevention (S5), and specifies that values for S-2 and S-4 are to be determined by interpolation between the adjacent performance level values.~~

~~The required method of interpolation is as follows:~~

~~For level S-2, the acceptance value is $^{1}/_{3}$ of the sum of the tabulated value for Immediate Occupancy (IO level) and twice the tabulated value for the Life Safety (LS level).~~

~~For level S-4, the acceptance value is one-half the sum of the value for the LS level and the value for the Collapse Prevention (CP) level.~~

~~For nonstructural components, N-A corresponds to the IO level, N-C to the LS level, and N-D to the Hazards Reduced (HR level).~~

~~For evaluation procedures, N-B shall be the same as for N-A. Where numerical values are used, the values for N-B are one half the sum of the appropriate IO and LS values. Where IO or CP values are not given by ASCE 41, then the LS values are permitted to be substituted.~~

~~2. Buildings evaluated and retrofitted to meet the requirements for a new building, Chapter 16, Part 2, Title 24, in accordance with the exception in Section 3419.1, are deemed to meet the seismic performance requirements of this section.~~

~~**3417.6 Retrofit required.** Where the evaluation indicates the building does not meet the required performance objectives of this section, the owner shall take appropriate steps to ensure that the building's structural system is retrofitted in accordance with the provisions of Section 3417. Appropriate steps are either: 1) undertake the seismic retrofit as part of the additions, modifications and/or repairs of the structure; or 2) provide a plan, acceptable to the building official, to complete the seismic retrofit in a timely manner. The relocation or moving of an existing building is considered to be an alteration requiring filing of the plans and specifications approved by the building official.~~

~~**3417.7** The additions, modification or repair to any existing building are permitted to be prepared in accordance with the requirements for a new building, Chapter 16, Part 2, Title 24, C.C.R., 2007 edition, applied to the entire building.~~

~~**3417.8** The requirements of ASCE 41 Chapter 9 are to apply to the use of seismic isolation or passive energy systems for the repair, modification or retrofit of an existing structure. When seismic isolation or passive energy dissipation is used, the project must have project peer review as prescribed in Section 3422.~~

~~**3417.9** Any construction required by this chapter shall include structural observation by the registered design professional who is responsible for the structural design in accordance with Section 3419.10.~~

~~**3417.10** Where Method B of Section 3421 is used or is required by Section 3419.7, the proposed method of building evaluation and design procedures must be accepted by the building official prior to the commencement of the work.~~

~~**3417.11 Voluntary lateral-force-resisting system modifications.** Where the exception of Section 3417.2 applies, modifications of existing structural components and additions of new structural components that are initiated for the purpose of improving the seismic performance of an existing structure and that are not required by other portions of this chapter are permitted under the requirements of Section 3419.12.~~

~~SECTION 3418~~
~~DEFINITIONS~~

~~**3418.1.** In addition to the definitions given in Section 3402, for the purposes of Sections 3417 through 3423, certain terms are defined as follows:~~
~~**ADDITION** means any work that increases the floor or roof area or the volume of enclosed space of an existing building, and is structurally attached to the existing building by connections that are required for transmitting vertical or horizontal loads between the addition and the existing structure.~~

~~**ALTERATION** means any change within or to an existing building, which does not increase and may decrease the floor or roof area or the volume of enclosed space.~~
~~**BSE-C RESPONSE ACCELERATION PARAMETERS** are the parameters (S_{XS} and S_{X1} taken from 5-percent /50-year maximum direction spectral response acceleration curves or by a Site Specific Response Spectrum developed in accordance with Section 3417.5. Values for BSE-C need not be greater than those for BSE-2.~~
~~**BSE-R RESPONSE ACCELERATION PARAMETERS** are the parameters (S_{XS} and S_{X1}) taken from 20-percent /50-year maximum direction spectral response acceleration curves or by a Site Specific Response Spectrum developed in accordance with Section 3417.5. Values for BSE-R need not be greater than those for BSE-1.~~

~~**BUILDING OFFICIAL** is that individual within the agency or organization charged with responsibility for compliance with the requirements of this code. For some agencies this person is termed the "enforcement agent."~~

~~**DESIGN** is the procedure that includes both the evaluation and retrofit design of an existing component, element or structural system, and design of a new component, element or structural system.~~

~~**ENFORCEMENT AGENCY (Authority Having Jurisdiction in ASCE 41)** is the agency or organization charged with responsibility for agency or organization compliance with the requirements of this code.~~

~~**METHOD A** refers to the procedures prescribed in Section 3420.~~

~~**METHOD B** refers to the procedures allowed in Section 3421.~~

~~**MODIFICATIONS.** For this chapter, modification is taken to include repairs to structures that have been damaged.~~

~~**N-A, N-B, N-C, N-D, N-E** are seismic nonstructural component performance measures as defined in ASCE 41. N-A corresponds to the highest performance level, and N-D the lowest, while N-E is not considered.~~

~~**PEER REVIEW** refers to the procedures contained in Section 3422.~~

~~**REPAIR** as used in this chapter means the design and construction work undertaken to restore or enhance the structural and nonstructural load-resisting system participating in the lateral response and stability of a structure that has experienced damage from earthquakes or other destructive events.~~

~~**S-1, S-2, S-3, S-4, S-5, S-6** are seismic structural performance measures as defined in ASCE 41. S-1 corresponds to the highest performance level, and S-5 the lowest, while S-6 is not considered.~~

~~***SPECIFIC PROCEDURES*** *are the procedures listed in Section 3419.1.1.*~~

~~***STRUCTURAL REPAIRS*** *are any changes affecting existing or requiring new structural components primarily intended to correct the effects of damage, deterioration or impending or actual failure, regardless of cause.*~~

~~***SECTION 3419***~~
~~***SEISMIC CRITERIA SELECTION FOR EXISTING BUILDINGS***~~

~~***3419.1 Basis for evaluation and design.*** *This section determines what technical approach is to be used for the seismic evaluation and design for existing buildings. For those buildings or portions of buildings for which Section 3417 requires action, the procedures and limitations for the evaluation of existing buildings and design of retrofit systems and/or repair thereof shall be implemented in accordance with this section.*~~

~~*One of the following approaches must be used:*~~

~~*1. Method A of Section 3420;*~~

~~*2. Method B of Section 3421, with independent review of a peer reviewer as required in Section 3422; or*~~

~~*3. For state-owned buildings only, the use of one of the specific procedures listed in Section 3419.1.1.*~~

~~*When Method B is chosen it must be approved by the building official, and, where applicable, by the peer reviewer. All referenced standards in ASCE 41 shall be replaced by referenced standards listed in Chapter 35 of this code.*~~
~~***Exceptions:***~~

~~*1.* ***[BSC]*** *For buildings constructed to the requirements of California Building Code, 1998 or later edition as adopted by the governing jurisdiction, that code is permitted to be used in place of those specified in Section 3419.1.*~~

~~*2.* *[Reserved for DSA]*~~

~~***3419.1.1 Specific procedures.*** *For state-owned buildings, the following specific procedures taken from the International Existing Building Code (IEBC) Appendix A may be used, without peer review, for their respective types of construction to comply with the seismic performance requirements for Risk Category I, II or III buildings:*~~

~~*1. Seismic Strengthening Provisions for Unreinforced Masonry Bearing Wall Buildings (Chapter A1 of the IEBC).*~~

~~*2. Prescriptive Provisions for Seismic Strengthening of Cripple Walls and Sill Plate Anchorage of Light Wood-Frame, Residential Buildings (Chapter A3 of the IEBC).*~~

~~*3. Earthquake Hazard Reduction in Existing Reinforced Concrete and Reinforced Masonry Wall Buildings with Flexible Diaphragms (Chapter A2 of the IEBC).*~~

~~***3419.1.2*** *When a design project is begun under Method B the selection of the peer reviewer is subject to the approval of the building official. Following approval by the peer reviewer, the seismic criteria for the project and the planned evaluation provisions must be approved by the building official. The approved seismic criteria and evaluation provisions shall apply. Upon approval of the building official these are permitted to be modified.*~~

~~***3419.1.3*** *For state-owned and community college buildings, where unreinforced masonry is not bearing, it may be used only to resist applied lateral loads. Where unreinforced masonry walls are part of the structure they must be assessed for stability under the applicable nonstructural evaluation procedure.*~~

...

~~***3419.2 Existing conditions.*** *The existing condition and properties of the entire structure must be determined and documented by thorough inspection of the structure and site, review of all available related construction documents, review of geotechnical and engineering geologic reports, and performance of necessary testing and investigation. Where samples from the existing structure are taken or in situ tests are performed, they shall be selected and interpreted in a statistically appropriate manner to ensure that the properties determined and used in the evaluation or design are representative of the conditions and structural circumstances likely to be encountered in the structure as a whole. Adjacent structures or site features that may affect the retrofit design shall be identified.*~~

~~*The entire load path of the seismic-force-resisting system shall be determined, documented and evaluated. The load path includes all the horizontal and vertical elements participating in the structural response: such as diaphragms, diaphragm chords, diaphragm collectors, vertical elements such as walls frames, braces; foundations and the connections between the components and elements of the load path. Repaired or retrofitted elements and the standards under which the work was constructed shall be identified.*~~

~~*Data collection in accordance with ASCE 41 Section 2.2 shall meet the following minimum levels:*~~

~~*1. For state-owned buildings, the requirements shall be met following the data collection requirements of ASCE 41 Section 2.2.*~~

....

~~*Qualified test data from the original construction may be accepted, in part or in whole, by the enforcement agency to fulfill the data collection requirements.*~~

~~***Exceptions:***~~

~~*1. The number of samples for data collection may be adjusted with approval of the enforcement agency when it has been determined that adequate information has been obtained or additional information is required.*~~
~~*2. Welded steel moment frame connections of buildings that may have experienced potentially damaging ground motions shall be inspected in accordance with Chapters 3 and 4, FEMA 352, Recommended Post Earthquake Evaluation and Repair Criteria for Welded Moment Frame Construction for Seismic Applications (July 2000).*~~

~~*Where original building plans and specifications are not available, "as-built" plans shall be prepared that depict the existing vertical and lateral structural systems, exterior elements, foundations and nonstructural systems in sufficient detail to complete the design.*~~

~~*Data collection shall be directed and observed by the project structural engineer or design professional in charge of the design.*~~

~~***3419.3 Site geology and soil characteristics.*** *Soil profile shall be assigned in accordance with the requirements of Chapter 18.*~~

~~**3419.4 Risk categories.** For purposes of earthquake-resistant design, each structure shall be placed in one of the risk categories in accordance with the requirements of this code.~~

~~**3419.5 Configuration requirements.** Each structure shall be designated structurally regular or irregular in accordance with the requirements of ASCE 41, Sections 2.4.1.1.1. to 2.4.1.1.4.~~

~~**3419.6 General selection of the design method.** The requirements of Method B (Section 3421) may be used for any existing building.~~

~~**3419.7 Prescriptive selection of the design method.** The requirements of Method A (Section 3420) or the specific procedures for applicable building types given in Section 3419.1.1 are permitted to be used except under the following conditions, where the requirements of Method B (Section 3421) must be used.~~

~~**3419.7.1** When the building contains prestressed or post- tensioned structural components (beams, columns, walls or slabs) or contains precast structural components (beams, columns, walls or flooring systems).~~

~~**3419.7.2** When the building is classified as irregular in vertical or horizontal plan by application of ASCE/SEI 7 Section 12.3 and/or ASCE 41, Sections 2.4.1.1.1 to 2.4.1.1.4, unless the irregularity is demonstrated not to affect the seismic performance of the building.~~

~~**Exception:** If the retrofit design removes the configurational attributes that caused the building to be classified as irregular, then Section 3419.7.2 does not apply and Method A may be used.~~

~~**3419.7.3** For any building that is assigned to Risk Category IV.~~

~~**3419.7.4** For any building using undefined or hybrid structural systems.~~

~~**3419.7.5** When seismic isolation or energy dissipation systems are used in the retrofit or repair, either as part of the existing structure or as part of the modifications.~~

~~**3419.7.6** When the height of the structure exceeds 240 feet (73 152 mm).~~

~~**3419.8 Strength requirements.** All components of the lateral-force-resisting system must have the strength to meet the acceptance criteria prescribed in ASCE 41, Chapter 3, or as prescribed in the applicable Appendix A chapter of the IEBC if a specific procedure in Section 3419.1.1 is used. Any component not having this strength shall have its capacity increased by modifying or supplementing its strength so that it exceeds the demand, or the demand is reduced to less than the existing strength by making other modifications to the structural system.~~

~~**Exception:** A component's strength is permitted to be less than that required by the specified seismic load combinations if it can be demonstrated that the associated reduction in seismic performance of the component or its removal due to the failure does not result in a structural system that does not comply with the required performance objectives of Section 3417. If this exception is taken for a component, then it cannot be considered part of the primary lateral-load- resisting system.~~

~~**3419.9 Nonstructural component requirements.** Where the nonstructural performance levels required by Section 3417, Table 3417.5 are N-D or higher, mechanical, electrical and plumbing components shall comply with the provisions of ASCE 41, Chapter 11, Section 11.2.~~

~~**Exception:** Modifications to the procedures and criteria may be made subject to approval by the building official, and concurrence of the peer reviewer if applicable. All reports and correspondence shall also be forwarded to the building official.~~

~~**3419.10 Structural observation, testing and inspection.** Structural, geotechnical and construction observation, testing and inspection as used in this section shall mean meeting the requirements of Chapter 17, with a minimum allowable level of investigation corresponding to seismic design category~~

~~(SDC) D. At a minimum the project site will be visited by the responsible design professional to observe existing conditions and to review the construction work for general compliance with approved plans, specifications and applicable structural regulations. Such visits shall occur at significant construction stages and at the completion of the structural retrofit. Structural observation shall be provided for all structures. The plan for testing and inspection shall be submitted to the building official for review and approval with the application for permit.~~

~~**Additional requirements:** For public schools and community colleges, construction material testing, inspection and observation during construction shall also comply with Section 4-333, Part 1, Title 24.~~

~~**3419.10.1** The registered design professional, or their designee, responsible for the structural design shall be retained to perform structural observation and independently report to the owner of observations and findings as they relate to adherence to the permitted plans and good workmanship.~~

~~**3419.10.2** At the conclusion of construction, the structural observer shall submit to the enforcement agency and the owner a final written statement that the required site visits have been made, that the work, to the best of the structural observers knowledge and belief, is or is not in general conformity to the approved plans and that the observed structural deficiencies have been resolved and/or listing those that, to the best of the structural observers knowledge and belief, have not been satisfactorily corrected.~~

~~**3419.10.2.1** The requirement for structural observation shall be noted and prominently displayed on the front sheet of the approved plans and incorporated into the general notes on the approved plans.~~

~~**3419.10.2.2 Preconstruction meeting.** A preconstruction meeting is mandatory for all projects which require structural observation. The meeting shall include, but is not limited to, the registered design professional, structural observer, general constructor, affected subcontractors, the project inspector and a representative of the enforcement agency (designated alternates may attend if approved by the structural observer). The structural observer shall schedule and coordinate this meeting. The purpose of the meeting is to identify and clarify all essential structural components and connections that affect the lateral and vertical load systems and to review scheduling of the required observations for the project's structural system retrofit.~~

~~**3419.11 Temporary actions.** When compatible with the building use, and the time phasing for both use and the retrofit program, temporary shoring or other structural support is permitted to be considered. Temporary bracing, shoring and prevention of falling hazards are permitted to be used to qualify for Exception 1 in Section 3419.12 that allows inadequate capability in some existing components, as long as the required performance levels given in Section 3417 can be provided by the permanent structure. The consideration for such temporary actions shall be noted in the design documents.~~

~~**3419.12 Voluntary modifications to the lateral-force resisting system.** Where modifications of existing structural components and additions of new structural components are initiated for the purpose of improving the lateral-force resisting strength or stiffness of an existing structure and they are not required by other sections of this code, then they are permitted to be designed to meet an approved seismic performance criteria provided that an engineering analysis is submitted that follows:~~

~~1. The capacity of existing structural components required to resist forces is not reduced, unless it can be demonstrated that reduced capacity meets the requirements of Section 3419.8.~~

~~2. The lateral loading to or strength requirement of existing structural components is not increased beyond their capacity.~~

~~3. New structural components are detailed and connected to the existing structural components as required by this code for new construction.~~

~~4. New or relocated nonstructural components are detailed and connected to existing or new structural components as required by this code for new construction.~~

~~5. A dangerous condition is not created.~~

~~**3419.12.1 State-owned buildings.** Voluntary modifications to lateral-force-resisting systems conducted in accordance with Appendix A of the IEBC and the referenced standards of this code shall be permitted.~~

~~**3419.12.1.1 Design documents.** When Section 3419.12 is the basis for structural modifications, the approved design documents must clearly state the scope of the seismic modifications and the accepted criteria for the design. The approved design documents must clearly have the phrase "The seismic requirements of Chapter 34 for existing buildings have not been checked to determine if these structural modifications meet CBC requirements: the modifications proposed are to a different seismic performance standard than would be required in Section 3419 if they were not voluntary as allowed in Section 3419.12."~~

...

~~**SECTION 3420**~~
~~**METHOD A**~~

~~**3420.1 General.** The retrofit design shall employ the Linear Static or Linear Dynamic Procedures of ASCE 41, Section 3.3.1 or 3.3.2, and comply with the applicable general requirements of ASCE 41, Chapters 2 and 3. The earthquake hazard level and performance level given specified in Section 3417.5 for the building's risk category shall be used. Structures shall be designed for seismic forces coming from any horizontal direction.~~

~~**Exception:** The ASCE 41 Simplified Rehabilitation Method of Chapter 10 may be used if the Level 1 seismic performance level is S-3 or lower, the building's structural system is one of the primary building types described in ASCE 41, Table 10-2, and ASCE 41, Table 10-1 permits it use for the building height.~~

~~**SECTION 3421**~~
~~**METHOD B**~~

~~**3421.1** The existing or retrofitted structure shall be demonstrated to have the capability to sustain the deformation response due to the specified earthquake ground motions and meet the seismic performance requirements of Section 3417. The registered design professional shall provide an evaluation of the response of the existing structure in its modified configuration and condition to the ground motions specified. If the building's seismic performance is evaluated as satisfactory and the peer reviewer(s,) and the enforcement agency concurs, then no further structural modifications of the lateral-load-resisting system are required.~~

~~When the evaluation indicates the building does not meet the required performance levels given in Table 3417.5 for the risk category, then a retrofit and/or repair design shall be prepared that provides a structure that meets these performance objectives and reflects the appropriate consideration of existing conditions. Any approach to analysis and design is permitted to be used, provided that the approach shall be rational, shall be consistent with the established principals of mechanics and shall use the known performance characteristics of materials and assemblages under reversing loads typical of severe earthquake ground motions.~~

~~**Exception:** Further consideration of the structure's seismic performance may be waived by the enforcement agency if both the registered design professional and peer reviewer(s) conclude that the~~

~~structural system can be expected to perform at least as well as required by the provisions of this section without completing an analysis of the structure's compliance with these requirements. A detailed report shall be submitted to the responsible building official that presents the reasons and basis for this conclusion. This report shall be prepared by the registered design professional. The peer reviewer(s) shall concur in this conclusion and affirm to it in writing. The building official shall either approve this decision or require completion of the indicated work specified in this section prior to approval.~~

~~**3421.2** The approach, models, analysis procedures, assumptions on material and system behavior and conclusions shall be peer reviewed in accordance with the requirements of Section 3422 and accepted by the peer reviewer(s).~~

~~**Exceptions:**~~

1. ~~The enforcement agency may perform the work of peer review when qualified staff is available within the jurisdiction.~~
2. ~~The enforcement agency may modify or waive the requirements for peer review when appropriate.~~

~~**3421.2.1** The approach used in the development of the design shall be acceptable to the peer reviewer and the enforcement agency and shall be the same method as used in the evaluation of the building. Approaches that are specifically tailored to the type of building, construction materials and specific building characteristics may be used, if they are acceptable to the independent peer reviewer. The use of Method A allowed procedures may also be used under Method B.~~

~~**3421.2.2** Any method of analysis may be used, subject to acceptance by the peer reviewer(s) and the building official. The general requirements given in ASCE 41, Chapter 2, shall be complied with unless exceptions are accepted by the peer reviewer(s) and building official. Use of other than ASCE 41 procedures in Method B requires building official concurrence before implementation.~~

~~**3421.2.3** Prior to implementation, the procedures, methods, material assumptions and acceptance/rejection criteria proposed by the registered design professional will be peer reviewed as provided in Section 3422. Where nonlinear procedures are used, prior to any analysis, the representation of the seismic ground motion shall be reviewed and approved by the peer reviewer(s) and the building official.~~

~~**3421.2.4** The conclusions and design decisions shall be reviewed and accepted by the peer reviewer(s) and the building official.~~

~~SECTION 3422~~
~~PEER REVIEW REQUIREMENTS~~

~~**3422.1 General.** Independent peer review is an objective, technical review by knowledgeable reviewer(s) experienced in the structural design, analysis and performance issues involved. The reviewer(s) shall examine the available information on the condition of the building, the basic engineering concepts employed and the recommendations for action.~~

~~**3422.3 Qualifications and terms of employment.** The reviewer(s) shall be independent from the design and construction team.~~

~~**3422.3.1** The reviewer(s) shall have no other involvement in the project before, during or after the review, except in a review capacity.~~

~~**3422.3.2** The reviewer(s) shall be selected and paid by the owner and shall have technical expertise in the evaluation and retrofit of buildings similar to the one being reviewed, as determined by the enforcement agency.~~

~~**3422.3.3** The reviewer (or in the case of review teams, the chair) shall be a California-licensed structural engineer who is familiar with the technical issues and regulations governing the work to be reviewed.~~

~~**Exception:** Other individuals with acceptable qualifications and experience may be a peer reviewer(s) with the approval of the building official.~~

~~**3422.3.4** The reviewer shall serve through completion of the project and shall not be terminated except for failure to perform the duties specified herein. Such termination shall be in writing with copies to the enforcement agency, owner and the registered design professional. When a reviewer is terminated or resigns, a qualified replacement shall be appointed within 10 working days, and the reviewer shall submit copies of all reports, notes and correspondence to the responsible building official, the owner and the registered design professional within 10 working days of such termination.~~

~~**3422.3.5** The peer reviewer shall have access in a timely manner to all documents, materials and information deemed necessary by the peer reviewer to complete the peer review.~~

~~**3422.4 Scope of review.** Review activities shall include, where appropriate, available construction documents, design criteria and representative observations of the condition of the structure, all inspection and testing reports, including methods of sampling, analytical models and analyses prepared by the registered design professional and consultants, and the retrofit or repair design. Review shall include consideration of the proposed design approach, methods, materials, details and constructability. Changes observed during construction that affect the seismic-resisting system shall be reported to the reviewer in writing for review and recommendation.~~

~~**3422.5 Reports.** The reviewer(s) shall prepare a written report to the owner and building official that covers all aspects of the review performed, including conclusions reached by the reviewer(s). Reports shall be issued after the schematic phase, during design development, and at the completion of construction documents but prior to submittal of the project plans to the enforcement agency for plan review. When acceptable to the building official, the requirement for a report during a specific phase of the project development may be waived.~~

~~Such reports should include, at the minimum, statements of the following:~~

~~1. Scope of engineering design peer review with limitations defined.~~

~~2. The status of the project documents at each review stage.~~

~~3. Ability of selected materials and framing systems to meet performance criteria with given loads and configuration.~~

~~4. Degree of structural system redundancy and the deformation compatibility among structural and nonstructural components.~~

~~5. Basic constructability of the retrofit or repair system.~~

~~6. Other recommendations that would be appropriate to the specific project.~~

~~7. Presentation of the conclusions of the reviewer identifying any areas that need further review, investigation and/or clarification.~~

~~8. Recommendations.~~

~~The last report prepared prior to submittal of permit documents to the enforcement agency shall include a statement indicating that the design is in conformance with the approved evaluation and design criteria~~

~~**3422.6 Response and resolutions.** The registered design professional shall review the report from the reviewer(s) and shall develop corrective actions and responses as appropriate. Changes observed during~~

~~*construction that affect the seismic-resisting system shall be reported to the reviewer in writing for review and recommendations. All reports, responses and resolutions prepared pursuant to this section shall be submitted to the responsible enforcement agency and the owner along with other plans, specifications and calculations required. If the reviewer resigns or is terminated prior to completion of the project, then the reviewer shall submit copies of all reports, notes and correspondence to the responsible building official, the owner and the registered design professional within 10 working days of such termination.*~~

~~***3422.7 Resolution of conflicts.*** *When the conclusions and recommendations of the peer reviewer conflict with the registered design professional's proposed design, the enforcement agency shall make the final determination of the requirement for the design.*~~

Notation:
Authority: Health and Safety Code §18928 & 18934.5
References: Health and Safety Code §§18928, 18928.1, & 18934.5

<u>ITEM 24.</u> CBSC proposes to adopt Chapter 35 Referenced Standards of the 2015 IBC without amendments.

CHAPTER 35
REFERENCED STANDARDS

. . .

Notation:
Authority: Health and Safety Code § 16600 18928 & 18934.5
References: Health and Safety Code §§18928, 18928.1, 18934.5 & 18938(b)

<u>ITEM 25.</u> APPENDIX CHAPTERS

CBSC proposes NOT to adopt Appendix A from the 2015 International Building Code. Carry forward editorial code reference amendments. See Item 26.

APPENDIX A
EMPLOYEE QUALIFICATIONS
The provisions contained in this appendix are not mandatory unless specifically <u>adopted by a state agency, or</u> referenced in the adopting ordinance.

. . .

CBSC proposes NOT to adopt Appendix B from the 2015 International Building Code.

APPENDIX B
BOARD OF APPEALS
The provisions contained in this appendix are not mandatory unless specifically <u>adopted by a state agency, or</u> referenced in the adopting ordinance.

. . .

CBSC proposes NOT to adopt Appendix C from the 2015 International Building Code.

APPENDIX C
GROUP U – AGRICULTURAL BUILDINGS
The provisions contained in this appendix are not mandatory unless specifically <u>adopted by a state agency, or</u> referenced in the adopting ordinance.

. . .

CBSC proposes NOT to adopt Appendix D from the 2015 International Building Code.

APPENDIX D
FIRE DISTRICTS
The provisions contained in this appendix are not mandatory unless specifically adopted by a state agency, or referenced in the adopting ordinance.

. . .

CBSC proposes NOT to adopt Appendix E from the 2015 International Building Code and the contents of Appendix E is not printed.

APPENDIX E
RESERVED

CBSC proposes NOT to adopt Appendix F from the 2015 International Building Code.

APPENDIX F
RODENTPROOFING
The provisions contained in this appendix are not mandatory unless specifically adopted by a state agency, or referenced in the adopting ordinance.

. . .

CBSC proposes NOT to adopt Appendix G from the 2015 International Building Code. Carry forward editorial code reference amendments. See Item 26.

APPENDIX G
FLOOD-RESISTANT CONSTRUCTION
The provisions contained in this appendix are not mandatory unless specifically adopted by a state agency, or referenced in the adopting ordinance.

. . .

CBSC proposes NOT to adopt Appendix H from the 2015 International Building Code.

APPENDIX H
SIGNS
The provisions contained in this appendix are not mandatory unless specifically adopted by a state agency, or referenced in the adopting ordinance.

. . .

CBSC proposes NOT to adopt Appendix I from the 2015 International Building Code.

APPENDIX I
PATIO COVERS

The provisions contained in this appendix are not mandatory unless specifically adopted by a state agency, or referenced in the adopting ordinance.

. . .

CBSC proposes NOT to adopt Appendix J from the 2015 International Building Code.

APPENDIX J
GRADING
The provisions contained in this appendix are not mandatory unless specifically adopted by a state agency, or referenced in the adopting ordinance.

. . .

CBSC proposes NOT to adopt Appendix K from the 2015 International Building Code.

APPENDIX K
ADMINISTRATIVE PROVISIONS
The provisions contained in this appendix are not mandatory unless specifically adopted by a state agency, or referenced in the adopting ordinance.

. . .

CBSC proposes NOT to adopt Appendix L from the 2015 International Building Code.

APPENDIX L
EARTHQUAKE RECORDING INSTRUMENTATION
The provisions contained in this appendix are not mandatory unless specifically adopted by a state agency, or referenced in the adopting ordinance.

. . .

CBSC proposes NOT to adopt Appendix M from the 2015 International Building Code.

APPENDIX M
TSUNAMI-GENERATED FLOOD HAZARD
The provisions contained in this appendix are not mandatory unless specifically adopted by a state agency, or referenced in the adopting ordinance.

. . .

Notation:
Authority: Health and Safety Code §18928 & 18934.5 18940.5
Reference: Health and Safety Code §§18928, 18928.1, 18934.5, 18938(b) & 18940.5

ITEM 26. CBSC proposes to carry forward existing CBSC amendments, non-substantive editorial and formatting amendments from the 2013 California Building Code for inclusion in the 2016 California Building Code.

CBSC does not adopt Chapter 1 SCOPE AND ADMINISTRATION, but proposes to carry forward existing editorial amendments and make additional editorial amendments for code consistency.

CHAPTER 1

DIVISION II
SCOPE AND ADMINISTRATION

101.2 Scope. . . .

Exception. Detached one- and two-family dwellings and multiple single-family dwellings (townhouses) not more than three stories above grade plane in height with a separate means of egress, and their accessory structures not more than three stories above grade plane in height, shall comply with the *California Residential Code.*

101.4.1 Gas. The provisions of the *California Mechanical Code* shall apply to the installation....

101.4.2 Mechanical. The provisions of the *California Mechanical Code* shall apply to the installation....

101.4.3 Plumbing. The provisions of the *California Plumbing Code* shall apply to the installation, alteration repair and replacement of plumbing systems, including equipment, appliances, fixtures, fittings and appurtenances, and were connected to a water or sewage system and all aspects of a medical gas system. The provisions of the International Private Sewage Disposal Code shall apply to the private sewage disposal system.

101.4.4 Property Maintenance. The provisions of the International Property Maintenance Code shall apply to the existing ....

101.4.5 Fire Prevention. The provisions of the *California Fire Code* shall apply to the matters ....

101.4.6 Energy. The provisions of the *California Energy Code* shall apply to all matters ....

102.4 Referenced Codes and Standards. The codes and standards referenced in this code shall be considered part of the requirements of this code to the prescribed extent of each such reference and as further regulated in Section 102.4.1 *through 102.4.4.*

102.4.1. Conflicts. Where conflicts occur between provisions of this code and referenced codes and standards, the provisions of this code shall apply.

102.4.2. Provisions in referenced codes and standards. Where the extent of the reference to a referenced code or standard includes subject matter that is within the scope of this code or the *California Codes* listed in Section 101.4, the provisions of this code or the *California Code* listed in Section 101.4, as applicable, shall take precedence over the provisions in the referenced code or standard.

102.4.6 Existing structures. The legal occupancy of any structure existing on the date of adoption of this code shall be permitted to continue without change, except as is specifically covered in this code, the *California Building Code* or the *California Fire Code*, or as is deemed necessary by the building official for the general safety and welfare of the occupants and the public.

CHAPTER 3
USE AND OCCUPANCY

307.1. High-hazard Group H. High-hazard Group H occupancy includes, . . . Hazardous occupancies are classified in Groups H-1, H-2, H-3, H-4 and H-5 and shall be in accordance with his section, the requirements of Section 415 and the *California Fire Code.* Hazardous material stored, or used on top of

roofs or canoOpies shall be classified as outdoor storage or use and shall comply with the *California Fire Code*.

Exceptions: the following shall not be classified as Group H, but shall be classified as the occupancy that they most nearly resemble.

1. Buildings and structures occupied for the application of flammable finishes, provided that such buildings or areas conform to the requirements of Section 416 and the *California Fire Code.*
2. Wholesale and retail sales and storage of flammable and combustible liquids in mercantile occupancies conforming to the *California Fire Code.*
3. . . .
4. . . .
5. . . .
6. . . .
7. . . .
8. . . .
9. Stationary batteries utilized for facility emergency power, uninterruptible power supply or telecommunication facilities, provided that the batteries are provided with safety venting caps and ventilation is provided in accordance with the *California Mechanical Code.*
10. . . .
11. Buildings and structures occupied for aerosol storage, shall be classified as Group S-1, provided that such building conform to the requirements of the *California Fire Code.*
12. . . .
13. The storage of black powder, smokeless propellant and small arms primers in Group M and R-3 and special industrial explosive devices in Groups B, F, M and S, provided such storage conforms to the quantity limits and requirements prescribed in the *California Fire Code.*
14. . . .

307.1.1 Hazardous materials. Hazardous materials in any quantity shall conform to the requirements of this code, including Section 414, and the *California Fire Code.*

Table 307.1(1) MAXIMUM ALLOWABLE QUANTITY PER CONTROL AREA OF HAZARDOUS MATERIALS POSING A PHYSICAL HAZARD
[Table not shown. Amendments are to the footnotes.]

a. . . .
b. . . .
c. . . .
d. . . .
e. . . . *California Fire Code* . . .
f. . . .
g. . . .
h. . . .
i. . . . *California Fire Code* . . .
j. . . .
k. . . .
l. . . .
m. . . . *California Fire Code* . . .
n. . . .
o. . . .
p. The following shall not be included in determining the maximum allowable quantities:
    1. Liquid or gaseous fuel in tanks and vehicles.

2. Liquid or gaseous fuel in fuel tanks and motorized equipment operated in accordance with ~~International Fire Code~~ *California Fire Code*.
3. Gaseous fuels in piping systems and fixed appliance regulated by the International Fuel Gas Code.
4. Liquid fuels in piping systems and fixed appliances regulated by the *California Mechanical Code*.
5. Alcohol-based hand rubs classified as Class I and II liquids in dispensers that are installed in accordance with Sections 5705.5 and 5702.5.1 of the ~~International Fire Code~~ *California Fire Code*. The location of the alcohol-based hand rub (ANHR) dispensers shall be provided in the construction documents

q. . . .

Table 307.1(2) MAXIMUM ALLOWABLE QUANTITY PER CONTROL AREA OF HAZARDOUS MATERIAL POSING A HEALTH HAZARD
[Table not shown. Amendments are to the footnotes]

a. . . .
b. . . .
c. . . .
d. . . .
e. . . . *California Fire Code* . . .
f. . . . *California Fire Code.* . . .
g. . . . *California Fire Code.*
h. . . .
i. . . . *California Fire Code.* . . .

310.1. Residential Group R. Residential Group R includes, among others, the use of building or structure, or a portion thereof, for sleeping purposes when not classified as and Institutional Group I or when not regulated by the *California Residential Code.*

. . .

CHAPTER 4
SPECIAL DETAILED REQUIREMENTS BASED ON USE AND OCCUPANCY

. . .

403.4.5 Emergency responder radio coverage. Emergency responder radio coverage shall be provided in accordance with Section 510 of the *California Fire Code*.

. . .

404.2 Use. The floor of the atrium shall not be used for other than low fire hazard uses and only approved materials and decorations in accordance with the *California Fire Code* shall be used in the atrium space.

CHAPTER 10
MEANS OF EGRESS

. . .

1001.3 Maintenance. Means of egress shall be maintained in accordance with the *California Building Code.*

1001.4 Fire safety and evacuation plans. Fire safety and evacuation plans shall be provided for all occupancies and buildings where required by the *California Fire Code.* Such fire safety and evacuation plans shall comply with the applicable provisions of Section 401.2 and 404 of the *California Fire Code.*

. . .

1006.2.2.3 (formerly 1015.5) Refrigerated rooms or spaces. Rooms or spaces having a floor area larger than 1,000 square feet (93 m^2), containing a refrigerant evaporator and maintained at a temperature below 68°F (20°C), shall have access to not less than two exits or exit access doorways.

Travel distance shall be determined as specified in Section 1016.1, but all portions of a refrigerated room or space shall be within 150 feet (45 720 mm) of an exit or exit access doorway where such rooms are not protected by an approved automatic sprinkler system. Egress is allowed through adjoining refrigerated rooms or spaces.

Exception: Where using refrigerants in quantities limited to the amounts based on the volume set forth in the *California Mechanical Code.*

. . .

CHAPTER 12
INTERIOR ENVIRONMENT

. . .

1203.1 General. Buildings shall be provided with natural ventilation in accordance with Section 1203.4, or mechanical ventilation in accordance with the *California Mechanical Code.*

. . .

1203.2.1 Openings into attic.
Exterior openings into the attic space of any building intended for human occupancy shall be protected to prevent the entry of birds, squirrels, rodents, snakes and other similar creatures. Openings for ventilation having a least dimension of not less than 1/16 inch (1.6 mm) and not more than ¼ inch (6.4 mm) shall be permitted. Openings for ventilation having a least dimension larger than ¼ inch (6.4 mm) shall be provided with corrosion-resistant wire cloth screening, hardware cloth, perforated vinyl or similar material with openings having a least dimension of not less than 1/16 inch (1.6 mm) and not more than ¼ inch (6.4 mm). Where combustion air is obtained from an *attic* area, it shall be in accordance with Chapter 7 of the *California Mechanical Code.*

. . .

1203.5.2 (formerly 1203.4.2) Contaminants exhausted. Contaminant sources in naturally ventilated spaces shall be removed in accordance with the *California Mechanical Code* and the *California Fire Code.*

. . .

1203.6 (formerly 1203.5) Other ventilation and exhaust systems. Ventilation and exhaust systems for occupancies and operations involving flammable or combustible hazards or other contaminant sources as covered in the *California Mechanical Code* or the *California Fire Code* shall be provided as required by both codes.

. . .

1205.4.1 Controls. The control for activation of the required stairway lighting shall be in accordance with *the California Electrical Code.*

. . .

1206.3.3 Court drainage. The bottom of every court shall be properly graded and drained to a public sewer or other approved disposal system complying with the *California Plumbing Code.*

. . .

1209.3 Mechanical appliances. Access to mechanical appliances installed in under-floor areas, in attic spaces and on roofs or elevated structures shall be in accordance with the *California Mechanical Code.*

. .

1210.1 Required fixtures. The number and type of plumbing fixtures provided in any occupancy shall comply with the *California Plumbing Code.*

. . .

CHAPTER 15
ROOF ASSEMBLIES AND ROOF TOP STRUCTURES

. . .

1503.4 Roof drainage. Design and installation of roof drainage systems shall comply with Section 1503 of this code and *Chapter 11* of the *California Plumbing Code.*

1503.4.1 Secondary (emergency overflow) drains or scuppers.
Where roof drains are required, secondary (emergency overflow) roof drains or scuppers shall be provided where the roof perimeter construction extends above the roof in such a manner that water will be entrapped if the primary drains allow buildup for any reason. The installation and sizing of secondary emergency overflow drains, leaders and conductors shall comply with *Chapter 11* of the *California Plumbing Code.*

. . .

1507.16 Vegetative roofs, roof gardens and landscaped roofs. Vegetative roofs, roof gardens and landscaped roofs shall comply with the requirements of this chapter, Sections 1607.12.3 and 1607.12.3.1 and the *California Fire Code.*

CHAPTER 16
STRUCTURAL DESIGN

. . .

1603.1.9 Systems and components requiring special inspections for seismic resistance. Construction documents or specifications shall be prepared for those systems and components requiring special inspection for seismic resistance as specified in Section 1705.11 by the registered design professional responsible for their design and shall be submitted for approval in accordance with ~~Section *107.1,*~~ *Chapter 1, Division II.* Reference to seismic standards in lieu of detailed drawings is acceptable.

. . .

TABLE 1604.5
RISK CATEGORY OF BUILDINGS AND OTHER STRUCTURES

Carry forward corrected code references of International Fire Code to *California Fire Code* in Table 1604.5.

...

1612.5 Flood hazard documentation.
The following documentation shall be prepared and sealed by a registered design professional and submitted to the building official:

1. For construction in flood hazard areas not subject to high-velocity wave action:

   1.1. The elevation of the lowest floor, including the basement, as required by the lowest floor elevation inspection in Section 110.3.3, *Chapter 1, Division II.*

   ...

2. For construction in flood hazard areas subject to high-velocity wave action:

   2.1. The elevation of the bottom of the lowest horizontal structural member as required by the lowest floor elevation inspection in Section 110.3.3, *Chapter 1, Division II.*

...

CHAPTER 17
SPECIAL INSPECTIONS AND TESTS

...

1704.2.3 Statement of special inspections. The applicant shall submit a statement of special inspections in accordance with Section 107.1 *Chapter 1, Division II,* as a condition for permit issuance. This statement shall be in accordance with Section 1704.3.

...

1707.1 General. In the absence of approved rules or other approved standards, the building official shall make, or cause to be made, the necessary tests and investigations; or the building official shall accept duly authenticated reports from approved agencies in respect to the quality and manner of use of new materials or assemblies as provided for in Section 104.11 *Chapter 1, Division II.* The cost of all tests and other investigations required under the provisions of this code shall be borne by the applicant.

> ***[BSC]*** *In the absence of approved rules or other approved standards, the building official shall make, or cause to be made, the necessary tests and investigations; or the building official shall accept duly authenticated reports from approved agencies in respect to the quality and manner of use of new materials or assemblies as provided for in Section 1.2.2, Chapter 1, Division I. The cost of all tests and other investigations required under the provisions of this code shall be borne by the applicant.*

...

CHAPTER 18
SOILS AND FOUNDATIONS

. . .

1805.4.3 Drainage discharge. The floor base and foundation perimeter drain shall discharge by gravity or mechanical means into an approved drainage system that complies with the *California Plumbing Code*.

. . .

1810.3.10.4 Seismic reinforcement. For structures assigned to Seismic Design Category C... ...as an alternate system in accordance with Section 104.11, *Chapter 1, Division II.* The alternative system design, supporting documentation and test data shall be submitted to the building official for review and approval.

. . .

CHAPTER 19
CONCRETE

. . .

1905.1.2 ACI 318, 18.2.1 (formerly Section 21.1.1.)
Modify ACI 318 Sections 18.2.1.2 (formerly 21.1.1.3) and 18.2.1.6 (formerly 21.1.1.7) to read as follows:

18.2.1.2 - Structures assigned to Seismic Design Category A shall satisfy requirements of Chapters 1 through 17 and 19 through 26*; Chapter 18 does not apply.* Structures assigned to *Seismic Design Category* B, C, D, E or F also shall satisfy 18.2.1.3 through 18.2.1.7, as applicable. *Except for structural elements of plain concrete complying with* Section *1905.1.7 of the California Building Code, structural elements of plain concrete are prohibited in structures assigned to Seismic Design Category C, D, E or F*

. . .

1905.1.5 (formerly 1905.1.6) ACI 318, Section 18.13.1.1. Modify ACI 318, Section 18.13.1.1, to read as follows:

18.13.1.1 - Foundations resisting earthquake-induced forces or transferring earthquake-induced forces between a structure and ground shall comply with the requirements of Section 21.12 and other applicable provisions of ACI 318 unless modified by Chapter 18 of the *California Building Code.*

. . .

CHAPTER 21
MASONRY

. . .

2109.1 General. Empirically designed masonry shall conform to the requirements of Chapter 5 of TMS 402/ACI 530/ASCE 5, except where otherwise noted in this section.

2109.1.1 Limitations. . . .

Section A.1.2.2 of TMS 402/ACI 530/ASCE 5 shall be modified as follows:

A.1.2.2 Wind – Empirical requirements shall not apply to the design or construction of masonry for buildings, parts of buildings, or other structures to be located in areas where V_{asd} as determined in accordance with Section 1609.3.1 of the *California Building Code* exceeds 110 mph.

. . .

CHAPTER 23
WOOD

. . .

2304.5 Framing around flues and chimneys. Combustible framing shall be a minimum of 2 inches (51 mm), but shall not be less than the distance specified in Sections 2111 and 2113 and the *California Mechanical Code*, from flues, chimneys and fireplaces, and 6 inches (152 mm) away from flue openings.

. . .

2308.1 General. . . . accessory structures shall comply with the *California Residential Code*.

. . .

CHAPTER 26
PLASTIC

. . .

2603.4.1.12 Interior signs. Foam plastic used for interior signs in covered mall buildings in accordance with Section 402.6.4 shall be permitted without a thermal barrier. Foam plastic signs that are not affixed to interior building surfaces shall comply with Chapter 8 of the *California Fire Code*.

. . .

CHAPTER 27
ELECTRICAL

2701.1 Scope. This chapter governs the electrical components, equipment and systems used in buildings and structures covered by this code. Electrical components, equipment and systems shall be designed and constructed in accordance with the provisions of *California Electrical Code*.

. . .

2702.1 Installation. Emergency and standby power systems required by this code or the *California Fire Code* shall be installed in accordance with this code, NFPA 110 and 111.

. . .

2702.2.11 Highly toxic and toxic materials. Emergency power shall be provided for occupancies with highly *toxic* or *toxic* materials in accordance with the *California Fire Code*.

2702.2.12 (formerly 2702.2.9) Membrane structures. Standby power shall be provided for auxiliary inflation systems in accordance with Section 3102.8.2. Emergency power shall be provided for exit signs in temporary tents and membrane structures in accordance with the *California Fire Code*.

2702.2.13 Pyrophoric materials. E emergency power shall be provided for occupancies with silane gas in accordance with the *California Fire Code*.

. . .

2703.4 (formerly 2702.3) Maintenance. Emergency and standby power systems shall be maintained and tested in accordance with the *California Fire Code*.

. . .

CHAPTER 28
MECHANICAL SYSTEMS

2801.1 Scope. Mechanical appliances, equipment and systems shall be constructed, installed and maintained in accordance with the *California Mechanical Code*. Masonry chimneys, fireplaces and barbecues shall comply with the *California Mechanical Code* and Chapter 21 of this code

. . .

CHAPTER 29
PLUMBING SYSTEMS

(Not Adopted by the State of California)
Refer to California Plumbing Code, Title 24, Part 5)

. . .

CHAPTER 31
SPECIAL CONSTRUCTION

. . .

3102.1 General. The provisions of Sections 3102.1 through 3102.8 shall apply to air-supported, air-inflated, membranecovered cable and membrane-covered frame structures, collectively known as membrane structures, erected for a period of 180 days or longer. Those erected for a shorter period of time shall comply with the *California Fire Code*. Membrane structures covering water storage facilities, water clarifiers, water treatment plants, sewage treatment plants, greenhouses and similar facilities not used for human occupancy are required to meet only the requirements of Sections 3102.3.1 and 3102.7. Membrane structures erected on a building, balcony, deck or other structure for any period of time shall comply with this section.

. . .

3103.1 General.
The provisions of Sections 3103.1 through 3103.4 shall apply to structures erected for a period of less than 180 days. Tents and other membrane structures erected for a period of less than 180 days shall comply with the *California Fire Code*. Those erected for a longer period of time shall comply with applicable sections of this code.

. . .

3109.4.4 Private swimming pools (statewide).
These regulations are subject to local government modification. The applicable local government requirements at the time of application for a building permit should be verified. These standards become applicable commencing January 1, 1998, to a private, single-family home for which a construction permit for a new swimming pool has been issued on or after January 1, 1998.

3109.4.4.1 Definitions.
As used in this division, the following terms have the following meanings:

ANSI/APSP PERFORMANCE STANDARD *means a standard that is accredited by the American National Standards Institute (ANSI) and published by the Association of Pool and Spa Professionals (APSP).*

APPROVED SAFETY POOL COVER *means a manually or power-operated safety pool cover that meets all of the performance standards of the American Society for Testing and Materials (ASTM), in compliance with Standard F 1346-91.*

ENCLOSURE *means a fence, wall or other barrier that isolates a swimming pool from access to the home.*

EXIT ALARMS *means devices that make audible, continuous alarm sounds when any door or window that permits access from the residence to the pool area, that is without any intervening enclosure, is opened or is left ajar. Exit alarms may be battery operated or may be connected to the electrical wiring of the building.*

PUBLIC SWIMMING POOL *means a swimming pool operated for the use of the general public with or without charge, or for the use of the members and guests of a private club. Public swimming pool does not include a swimming pool located on the grounds of a private single-family home.*

SUCTION OUTLET *means a fitting or fixture typically located at the bottom or on the sides of a swimming pool that conducts water to a recirculating pump.*

SWIMMING POOL or POOL *means any structure intended for swimming or recreational bathing that contains water over 18 inches (457 mm) deep. Swimming pool includes in-ground and above-ground structures and includes, but is not limited to, hot tubs, spas, portable spas and nonportable wading pools.*

Authority: Health and Safety Code Section 18942(b)

Reference: Health and Safety Code Section 115921

Ab 3305, Statutes 1996, c.925

3109.4.4.2 Construction permit; safety features required.
Commencing January 1, 2007, except as provided in Section 3109.4.4.5, whenever a building permit is issued for construction of a new swimming pool or spa, or any building permit is issued for remodeling of an existing pool or spa, at a private, single-family home, it shall be equipped with at least one of the following seven drowning prevention safety features:

1. *The pool shall be isolated from access to a home by an enclosure that meets the requirements of Section 3109.4.4.3.*

2. *The pool shall incorporate removable mesh pool fencing that meets American Society for Testing and Materials (ASTM) Specifications F 2286 standards in conjunction with a gate that is selfclosing and self-latching and can accommodate a key lockable device.*

3. *The pool shall be equipped with an approved safety pool cover that meets all requirements of the ASTM Specifications F 1346.*

4. *The residence shall be equipped with exit alarms on those doors providing direct access to the pool.*

5. *All doors providing direct access from the home to the swimming pool shall be equipped with a self-closing, self-latching device with a release mechanism placed no lower than 54 inches (1372 mm) above the floor.*

6. *Swimming pool alarms that, when placed in pools, will sound upon detection of accidental or unauthorized entrance into the water. These pool alarms shall meet and be independently certified to the ASTM Standard F 2208 "Standards Specification for Pool Alarms" which includes surface motion, pressure, sonar, laser and infrared type alarms. For purposes of this article, "swimming pool alarms" shall not include swimming protection alarm devices designed for individual use, such as an alarm attached to a child that sounds when the child exceeds a certain distance or becomes submerged in water.*

7. *Other means of protection, if the degree of protection afforded is equal to or greater than that afforded by any of the devices set forth in items 1-4, and have been independently verified by an approved testing laboratory as meeting standards for those devices established by the ASTM or the American Society of Testing Mechanical Engineers (ASME).*

Prior to the issuance of any final approval for the completion of permitted construction or remodeling work, the local building code official shall inspect the drowning safety prevention devices required by this act and if no violations are found, shall give final approval.

Authority: Health and Safety Code Section 18942(b)

Reference: Health and Safety Code Section 115922

AB 3305 (Statutes 1996, c.925); AB 2977 (Statutes 2006, c.478); AB 382 (Statutes 2007, c.596)

3109.4.4.3 Enclosure; required characteristics.
An enclosure shall have all of the following characteristics:

1. *Any access gates through the enclosure open away from the swimming pool and are self-closing with a self-latching device placed no lower than 60 inches (1524 mm) above the ground.*

2. *A minimum height of 60 inches (1524 mm).*

3. *A maximum vertical clearance from the ground to the bottom of the enclosure of 2 inches (51 mm).*

4. *Gaps or voids, if any, do not allow passage of a sphere equal to or greater than 4 inches (102 mm) in diameter.*

5. *An outside surface free of protrusions, cavities or other physical characteristics that would serve as handholds or footholds that could enable a child below the age of five years to climb over.*

Authority: Health and Safety Code Section 18942(b)

Reference: Health and Safety Code Section 115923

AB 3305, Statutes 1996, c.925

3109.4.4.4 Agreements to build; notice of provisions.
Any person entering into an agreement to build a swimming pool or spa, or to engage in permitted work on a pool or spa covered by this article, shall give the consumer notice of the requirements of this article.

Pursuant to existing law, the Department of Health Services shall have available on the department's web site, commencing January 1, 2007, approved pool safety information available for consumers to download. Pool contractors are encouraged to share this information with consumers regarding the potential dangers a pool or spa poses toddlers. Additionally, pool contractors may provide the consumer with swimming pool safety materials produced from organizations such as the United States Consumer Product Safety Commission, Drowning Prevention Foundation, California Coalition for Children's Safety & Health, Safe Kids Worldwide, Association of Pool and Spa Professionals, or the American Academy of Pediatrics.

Authority: Health and Safety Code Section 18942(b)

Reference: Health and Safety Code Section 115924

AB 3305 (Statutes 1996, c.925); AB 2977 (Statutes 2006, c.478); AB 382 (Statutes 2007, c.596)

3109.4.4.5 Exempt facilities.
The requirements of this article shall not apply to any of the following:

1. *Public swimming pools.*
2. *Hot tubs or spas with locking safety covers that comply with the American Society for Testing Materials Emergency Performance Specification (ASTM ES 13-89).*
3. *Any pool within the jurisdiction of any political subdivision that adopts an ordinance for swimming pool safety that includes requirements that are at least as stringent as this division.*
4. *An apartment complex or any residential setting other than a single-family home.*

Authority: Health and Safety Code Section 18942(b)

Reference: Health and Safety Code Section 115925

Ab 3305, (Statutes 1996, c.925); AB 2977 (Statutes 2006, c.478); AB 382 (Statutes 2007,c.596)

3109.4.4.6 Application to facilities regulated by Department of Social Services.
This division does not apply to any facility regulated by the State Department of Social Services even if the facility is also used as a private residence of the operator. Pool safety in those facilities shall be regulated pursuant to regulations adopted therefor by the State Department of Social Services.

Authority: Health and Safety Code Section 18942(b)

Reference: Health and Safety Code Section 115926

AB 3305, Statutes 1996, c.925); AB 2977 (Statutes 2006, c.478); AB 382 (Statutes 2007, c.596)

3109.4.4.7 Modification and interpretation of division.
Notwithstanding any other provision of law, this article shall not be subject to further modification or interpretation by any regulatory agency of the state, this authority being reserved exclusively to local jurisdictions, as provided for in Item 5 of Section 3109.4.4.2 and Item 3 of Section 3109.4.4.5.

Authority: Health and Safety Code Section 18942(b)

Reference: Health and Safety Code Section 115927

AB 3305 (Statutes 1996, c.925); AB 2977 (Statutes 2006, c.478); AB 382 (Statutes 2007, c.596)

3109.4.4.8 Construction requirements for building a pool or spa.
Whenever a building permit is issued for the construction a new swimming pool or spa, the pool or spa shall meet all of the following requirements:

1. *The suction outlets of the pool or spa for which the permit is issued shall be equipped to provide circulation throughout the pool or spa as prescribed in Paragraphs 2 and 3.*

2. *The swimming pool or spa shall either have at least two circulation suction outlets per pump that shall be hydraulically balanced and symmetrically plumbed through one or more "T" fittings, and that are separated by a distance of at least three feet in any dimension between the suction outlets, or be designed to use alternatives to suction outlets including, but not limited to, skimmers or perimeter overflow systems to conduct water to the recirculation pump.*

3. *The circulation system shall have the capacity to provide a complete turnover of pool water, as specified in Section 3124B of Chapter 31B of the California Building Standards Code (Title 24 of the California Code of Regulations).*

4. *Suction outlets shall be covered with antientrapment grates, as specified in the ANSI/APSP-16 performance standard or successor standard designated by the federal Consumer Product Safety Commission, that cannot be removed except with the use of tools. Slots of openings in the grates or similar protective devices shall be of a shape, area and arrangement that would prevent physical entrapment and would not pose any suction hazard to bathers.*

5. *Any backup safety system that an owner of a new swimming pool or spa may choose to install in addition to the requirements set forth in subdivisions (1) through (4) above shall meet the standards as published in the document, "Guidelines for Entrapment Hazards: Making Pools and Spas Safer," Publication Number 363, March 2005, United States Consumer Products Safety Commission.*

6. *Whenever a building permit is for the remodel or modification of any existing swimming pool, toddler pool, or spa, the permit shall require that the suction outlet or suction outlets of the existing swimming pool, toddler pool, or spa be upgraded so as to be equipped with antientrapment grates, as specified in the ANSI/APSP-16 performance standard or a successor standard designated by the federal Consumer Product Safety Commission.*

Authority: Health and Safety Code Section 18942(b)

Reference: Health and Safety Code Section 115928 AB

3305 (Statutes 1996, c.925); AB 2977 (Statutes 2006, c.478); AB 478 (Statutes 2007, c.596)

3109.5 Entrapment avoidance.
Suction outlets shall be designed and installed in accordance with ANSI/APSP-7.

3109.6 Informative documents.

1. *The Legislature encourages a private entity, in consultation with the Epidemiology and Prevention for Injury Control Branch of the department, to produce an informative brochure or booklet, for consumer use, explaining the child drowning hazards of, possible safety measures for, and appropriate drowning hazard prevention measures for, home swimming pools and spas, and to donate the document to the department.*

2. *The Legislature encourages the private entity to use existing documents from the United States Consumer Product Safety Commission on pool safety.*

3. *If a private entity produces the document described in Subdivisions 1 and 2 and donates it to the department, the department shall review and approve the brochure or booklet.*

4. *Upon approval of the document by the department, the document shall become the property of the state and a part of the public domain. The department shall place the document on its Web site in a format that is readily available for downloading and for publication. The department shall review the document in a timely and prudent fashion and shall complete the review within 18 months of receipt of the document from a private entity.*

. . .

CHAPTER 31A
SYSTEMS FOR WINDOW CLEANING OR EXTERIOR BUILDING MAINTENANCE

See Title 8, California Code of Regulations, Division 1, Chapter 4, Subchapter 7, General Industry Safety Orders, Group 1, Articles 5 and 6.

. . .

CHAPTER 33
SAFEGUARDS DURING CONSTRUCTION

. . .

3302.3 Fire safety during construction. Fire safety during construction shall comply with the applicable requirements of this code and the applicable provisions of Chapter 33 of the *California Fire Code.*

. . .

3303.7 Fire safety during demolition. Fire safety during demolition shall comply with the applicable requirements of this code and the applicable provisions of Chapter 56 of the *California Fire Code.*

. . .

3305.1 Facilities required. Sanitary facilities shall be provided during construction, remodeling or demolition activities in accordance with the *California Plumbing Code.*

. . .

3309.2 Fire hazards. The provisions of this code and the *California Fire Code* shall be strictly observed to safeguard against all fire hazards attendant upon construction operations.

. . .

APPENDIX A
EMPLOYEE QUALIFICATIONS

. . .

A101.2 Chief inspector.
The building official can designate supervisors to administer the provisions of the *California Building, Mechanical* and *Plumbing Codes* and ~~*California*~~ International Fuel Gas Code. Each supervisor shall have at least 10 years' experience or equivalent as an architect, engineer, inspector, contractor or superintendent of construction, or any combination of these, five years of which shall have been in a supervisory capacity. They shall be certified through a recognized certification program for the appropriate trade.

. . .

SECTION A102
REFERENCED STANDARDS

IBC—15	*California* Building Code	A101.2
IMC—15	~~*California*~~ International Mechanical Code	A101.2
IPC—15	~~*California*~~ International Plumbing Code	A101.2
IFGC—15	~~*California*~~ International Fuel Gas Code	A101.2

. . .

APPENDIX G
FLOOD-RESISTANT CONSTRUCTION

. . .

G102.1 General.
This appendix, in conjunction with the *California Building Code*, provides minimum requirements for development located in flood hazard areas, including the subdivision of land; installation of utilities; placement and replacement of manufactured homes; new construction and repair, reconstruction, rehabilitation or additions to new construction; substantial improvement of existing buildings and structures, including restoration after damage, temporary structures, and temporary or permanent storage, utility and miscellaneous Group U buildings and structures, and certain building work exempt from permit under Section 105.2.

G102.2 Establishment of flood hazard areas.
Flood hazard areas are established in Section 1612.3 of the *California Building Code*, adopted by the applicable governing authority on [INSERT DATE].

. . .

G201.1 General.
The following words and terms shall, for the purposes of this appendix, have the meanings shown herein. Refer to Chapter 2 of the *California Building Code* for general definitions.

. . .

G301.2 Subdivision requirements. The following requirements shall apply in the case of any proposed subdivision, including proposals for manufactured home parks and subdivisions, any portion of which lies within a flood hazard area:

1. The flood hazard area, including floodways and areas subject to high velocity wave action, as appropriate, shall be delineated on tentative and final subdivision plats;

2. Design flood elevations shall be shown on tentative and final subdivision plats;

3. Residential building lots shall be provided with adequate buildable area outside the floodway; and

4. The design criteria for utilities and facilities set forth in this appendix and appropriate *California Codes* shall be met.

. . .

G1001.1 Utility and miscellaneous Group U.
Utility and miscellaneous Group U includes buildings that are accessory in character and miscellaneous structures not classified in any specific occupancy in the *California Building Code*, including, but not limited to, agricultural buildings, aircraft hangars (accessory to a one- or two-family residence), barns, carports, fences more than 6 feet (1829 mm) high, grain silos (accessory to a residential occupancy), greenhouses, livestock shelters, private garages, retaining walls, sheds, stables and towers.

. . .

G1001.3 Elevation.
Utility and miscellaneous Group U buildings and structures, including substantial improvement of such buildings and structures, shall be elevated such that the lowest floor, including basement, is elevated to or above the design flood elevation in accordance with Section 1612 of the *California Building Code*.

. . .

SECTION G1101
REFERENCED STANDARDS

ASCE 24—13	Flood Resistance Design and Construction	G103.1, G401.3, G401.4, G701.1,G801.1, G801.6, G801.7, G901.1, G1001.4, G201
HUD 24 CFR Part 3280 (2008)	Manufactured Home Construction and Safety Standards	
IBC—15	*California* Building Code	G102.2, G1001.1, G1001.3
IRC-15	*California* ~~International~~ Residential Code	G501.2, G501.4 G501.5
NFPA 70—11	*California* ~~National~~ Electrical Code	G1001.6

APPENDIX H
SIGNS

. . .

H102.1 General. The following words and terms shall, for the purposes of this appendix, have the meanings shown herein. Refer to Chapter 2 of the *California Building Code* for general definitions.

. . .

SECTION H115
REFERENCED STANDARDS

ASTM D 635—10	Test Method for Rate of Burning and/or Extent and Time of Burning of Self-Supporting Plastics in a Horizontal Position	H107.1.1
NFPA 70—11	~~National~~ *California* Electrical Code	H106.1, H106.2
NFPA 701—10	Methods of Fire Test for Flame Propagation of Textiles and Films	H106.1.1

. . .

APPENDIX I
PATIO COVERS

. . .

I102.1 General. The following words and terms shall, for the purposes of this appendix, have the meanings shown herein. Refer to Chapter 2 of *the California Building Code* for general definitions.

. . .

APPENDIX J – GRADING

J102.1 Definitions.
The following words and terms shall, for the purposes of this appendix, have the meanings shown herein. Refer to Chapter 2 of the *California Building Code* for general definitions.

. . .

J105.1 General.
Inspections shall be governed by Section 110, *Chapter 1, Division II* of this code.

. . .

APPENDIX M
TSUNAMI-GENERATED FLOOD HAZARD

. . .

M101.2 Definitions. The following words and terms shall, for the purposes of this appendix, have the meanings shown herein. Refer to Chapter 2 of the *California Building Code* for general definitions.

. .

Notation:
Authority: Health and Safety Code §18928 & 18934.5 18940.5
Reference: Health and Safety Code §§18928, 18928.1, 18934.5, 18938(b) & 18940.5

FINAL EXPRESS TERMS
FOR
PROPOSED BUILDING STANDARDS
OF THE
DIVISION OF THE STATE ARCHITECT (DSA-AC)

REGARDING PROPOSED CHANGES TO
THE CALIFORNIA BUILDING CODE
CALIFORNIA CODE OF REGULATIONS, TITLE 24, PART 2

2016 CALIFORNIA BUILDING CODE
TRIENNIAL CODE CYCLE

LEGEND FOR FINAL EXPRESS TERMS (combination of First 45-Day, Second 45-Day, and 15-Day changes)

1. For First 45-Day, Second 45-Day, and 15-Day changes, existing California amendments or code language being modified appears in *italics*, with modified language underlined.
2. For First 45-Day, Second 45-Day, and 15-Day changes, repealed text appears in ~~strikeout~~.

FINAL EXPRESS TERMS

CHAPTER 1
SCOPE AND ADMINISTRATION
DIVISION I
CALIFORNIA ADMINISTRATION

DSA-AC proposes to carry forward its adoption of existing California amendments in Chapter 1, Division I, from the 2013 CA Building Code into the 2016 CA Building Code, with further amendment as indicated.

ITEM 1.1.00

CHAPTER 1, DIVISION I – MATRIX ADOPTION TABLE

Adopting Agency		DSA-AC
Adopt entire California Chapter		
Adopt entire California Chapter as amended (amended Sections listed below)		
Adopt only those Sections that are listed below		X
Chapter / Section		
1.1		X
1.2.2		X
1.9.1 – 1.9.1.8		X

ITEM 1.1.01

SECTION 1.1

GENERAL

1.1.1 Title. *These regulations shall be known as the California Building Code, may be cited as such and will be referred to herein as "this code." The California Building Code is Part 2 of twelve parts of the official compilation and publication of the adoption, amendment and repeal of building regulations to the California Code of Regulations, Title 24, also referred to as the California Building Standards Code. This part incorporates by adoption the ~~2012~~ 2015 International Building Code of the International Code Council with necessary California amendments.*

1.1.2 Purpose. *The purpose of this code is to establish the minimum requirements to safeguard the public health, safety and general welfare through structural strength, means of egress facilities, stability, access to persons with disabilities, sanitation, adequate lighting and ventilation and energy conservation; safety to life and property from fire and other hazards attributed to the built environment; and to provide safety to fire fighters and emergency responders during emergency operations.*

1.1.3 Scope. *The provisions of this code shall apply to the construction, alteration, movement, enlargement, replacement, repair, equipment, use and occupancy, location, maintenance, removal and demolition of every building or structure or any appurtenances connected or attached to such buildings or structures throughout the State of California.*

1.1.3.1 Nonstate-regulated buildings, structures and applications. *Except as modified by local ordinance pursuant to Section 1.1.8, the following standards in the California Code of Regulations, Title 24, Parts 2, 2.5, 3, 4, 5, 6, 9, 10 and 11 shall apply to all occupancies and applications not regulated by a state agency.*

1.1.3.2 State-regulated buildings, structures and applications. *The model code, state amendments to the model code, and/or state amendments where there are no relevant model code provisions shall apply to the following buildings, structures, and applications regulated by state agencies as specified in Sections 1.2 through 1.14, except where modified by local ordinance pursuant to Section 1.1.8. When adopted by a state agency, the provisions of this code shall be enforced by the appropriate enforcing agency, but only to the extent of authority granted to such agency by the state legislature.*

Note: *See Preface to distinguish the model code provisions from the California provisions.*

1. *State-owned buildings, including buildings constructed by the Trustees of the California State University, and to the extent permitted by California laws, buildings designed and constructed by the Regents of the University of California, and regulated by the Building Standards Commission. See Section 1.2 for additional scope provisions.*

2. *Local detention facilities regulated by the Corrections Standards Authority. See Section 1.3 for additional scope provisions.*

3. *Barbering, cosmetology or electrolysis establishments, acupuncture offices, pharmacies, veterinary facilities and structural pest control locations regulated by the Department of Consumer Affairs. See Section 1.4 for additional scope provisions.*

4. *Energy efficiency standards regulated by the California Energy Commission. See Section 1.5 for additional scope provisions.*

5. *Dairies and places of meat inspection regulated by the Department of Food and Agriculture. See Section 1.6 for additional scope provisions.*

6. *Organized camps, laboratory animal quarters, public swimming pools, radiation protection,*

commissaries serving mobile food preparation vehicles and wild animal quarantine facilities regulated by the Department of Public Health. See Section 1.7 for additional scope provisions.

7. *Hotels, motels, lodging houses, apartment houses, dwellings, dormitories, condominiums, shelters for homeless persons, congregate residences, employee housing, factory-built housing and other types of dwellings containing sleeping accommodations with or without common toilets or cooking facilities. See Section 1.8.2.1.1 for additional scope provisions.*

8. *Accommodations for persons with disabilities in buildings containing newly constructed covered multifamily dwellings, new common use spaces serving existing covered multifamily dwellings, additions to existing buildings where the addition alone meets the definition of "COVERED MULTIFAMILY DWELLINGS," and common-use spaces serving covered multifamily dwellings which are regulated by the Department of Housing and Community Development. See Section 1.8.2.1.2 for additional scope provisions.*

9. *Permanent buildings and permanent accessory buildings or structures constructed within mobile home parks and special occupancy parks regulated by the Department of Housing and Community Development. See Section 1.8.2.1.3 for additional scope provisions.*

10. *Accommodations for persons with disabilities regulated by the Division of the State Architect. See Section 1.9.1 for additional scope provisions.*

11. *Public elementary and secondary schools, community college buildings and state-owned or state-leased essential service buildings regulated by the Division of the State Architect. See Section 1.9.2 for additional scope provisions.*

12. *Qualified historical buildings and structures and their associated sites regulated by the State Historical Building Safety Board with the Division of the State Architect. See Section 1.9.3 for additional scope provisions.*

13. *General acute care hospitals, acute psychiatric hospitals, skilled nursing and/or intermediate care facilities, clinics licensed by the Department of Public Health and correctional treatment centers regulated by the Office of Statewide Health Planning and Development. See Section 1.10 for additional scope provisions.*

14. *Applications regulated by the Office of State Fire Marshal include but are not limited to the following in accordance with Section 1.11.*

    14.1. Buildings or structures used or intended for use as an:

    1. *Asylum, jail, prison*

    2. *Mental hospital, hospital, home for the elderly, children's nursery, children's home or institution, school or any similar occupancy of any capacity*

    3. *Theater, dancehall, skating rink, auditorium, assembly hall, meeting hall, nightclub, fair building or similar place of assemblage where 50 or more persons may gather together in a building, room or structure for the purpose of amusement, entertainment, instruction, deliberation, worship, drinking or dining, awaiting transportation, or education*

    4. *Small family day care homes, large family day-care homes, residential facilities and residential facilities for the elderly, residential care facilities*

5. *State institutions or other state-owned or state-occupied buildings*

6. *High rise structures*

7. *Motion picture production studios*

8. *Organized camps*

9. *Residential structures*

14.2. Tents, awnings or other fabric enclosures used in connection with any occupancy

14.3. Fire alarm devices, equipment and systems in connection with any occupancy

14.4. Hazardous materials, flammable and combustible liquids

14.5. Public school automatic fire detection, alarm, and sprinkler systems

14.6. Wildland-urban interface fire areas

15. *Public libraries constructed and renovated using funds from the California Library Construction and Renovation Bond Act of 1988 and regulated by the State Librarian. See Section 1.12 for additional scope provisions.*

16. *Graywater systems regulated by the Department of Water Resources. See Section 1.13 for additional scope provisions.*

17. *For applications listed in Section 1.9.1 regulated by the Division of the State Architect – Access Compliance, outdoor environments and uses shall be classified according to accessibility uses described in ~~Chapters~~ Chapter 11B.*

18. *Marine Oil Terminals regulated by the California State Lands Commission. See Section 1.14 for additional scope provisions.*

1.1.4 Appendices. *Provisions contained in the appendices of this code shall not apply unless specifically adopted by a state agency or adopted by a local enforcing agency in compliance with Health and Safety Code Section 18901 et. seq. for Building Standards Law, Health and Safety Code Section 17950 for State Housing Law and Health and Safety Code Section 13869.7 for Fire Protection Districts. See Section 1.1.8 of this code.*

1.1.5 Referenced codes. *The codes, standards and publications adopted and set forth in this code, including other codes, standards and publications referred to therein are, by title and date of publication, hereby adopted as standard reference documents of this code. When this code does not specifically cover any subject related to building design and construction, recognized architectural or engineering practices shall be employed. The National Fire Codes, standards, and the Fire Protection Handbook of the National Fire Protection Association are permitted to be used as authoritative guides in determining recognized fire prevention engineering practices.*

1.1.6 Nonbuilding standards, orders and regulations. *Requirements contained in the International Building Code, or in any other referenced standard, code or document, which are not building standards as defined in Health and Safety Code Section 18909, shall not be construed as part of the provisions of this code. For nonbuilding standards, orders, and regulations, see other titles of the California Code of Regulations.*

1.1.7 Order of precedence and use.

1.1.7.1 Differences. *In the event of any differences between these building standards and the standard reference documents, the text of these building standards shall govern.*

1.1.7.2 Specific provisions. *Where a specific provision varies from a general provision, the specific provision shall apply.*

1.1.7.3 Conflicts. *When the requirements of this code conflict with the requirements of any other part of the California Building Standards Code, Title 24, the most restrictive requirements shall prevail.*

1.1.8 City, county, or city and county amendments, additions or deletions. *The provisions of this code do not limit the authority of city, county, or city and county governments to establish more restrictive and reasonably necessary differences to the provisions contained in this code pursuant to complying with Section 1.1.8.1. The effective date of amendments, additions or deletions to this code by a city, county, or a city and county filed pursuant to Section 1.1.8.1 shall be the date filed. However, in no case shall the amendments, additions or deletions to this code be effective any sooner than the effective date of this code.*

Local modifications shall comply with Health and Safety Code Section 18941.5 for Building Standards Law, Health and Safety Code Section 17958 for State Housing Law or Health and Safety Code Section 13869.7 for Fire Protection Districts.

1.1.8.1 Findings and filings.

1. *The city, county, or city and county shall make express findings for each amendment, addition or deletion based upon climatic, topographical or geological conditions.*

   Exception: *Hazardous building ordinances and programs mitigating unreinforced masonry buildings.*

2. *The city, county, or city and county shall file the amendments, additions or deletions expressly marked and identified as to the applicable findings. Cities, counties, cities and counties, and fire departments shall file the amendments, additions or deletions, and the findings with the California Building Standards Commission at 2525 Natomas Park Drive, Suite 130, Sacramento, CA 95833.*

3. *Findings prepared by fire protection districts shall be ratified by the local city, county, or city and county and filed with the California Department of Housing and Community Development, Division of Codes and Standards, P.O. Box 1407, Sacramento, CA 95812-1407 or 2020 W. El Camino Avenue, Suite 250, Sacramento CA 95833-1829.*

1.1.9 Effective date of this code. *Only those standards approved by the California Building Standards Commission that are effective at the time an application for building permit is submitted shall apply to the plans and specifications for, and to the construction performed under, that permit. For the effective dates of the provisions contained in this code, see the History Note page of this code.*

1.1.10 Availability of codes. *At least one complete copy each of Titles 8, 19, 20, 24, and 25 with all revisions shall be maintained in the office of the building official responsible for the administration and enforcement of this code. Each state department concerned and each city, county or city and county shall have an up-to-date copy of the code available for public inspection. See Health and Safety Code Section 18942(d)(1) and (2).*

1.1.11 Format. *This part fundamentally adopts the International Building Code by reference on a chapter-*

by-chapter basis. When a specific chapter of the International Building Code is not printed in the code and is marked "Reserved" such chapter of the International Building Code is not adopted as a portion of this code. When a specific chapter of the International Building Code is marked "Not adopted by the State of California" but appears in the code, it may be available for adoption by local ordinance.

Note: *Matrix Adoption Tables at the front of each chapter may aid the code user in determining which chapter or sections within a chapter are applicable to buildings under the authority of a specific state agency, but they are not to be considered regulatory.*

1.1.12 Validity. *If any chapter, section, subsection, sentence, clause or phrase of this code is for any reason held to be unconstitutional, contrary to statute, exceeding the authority of the state as stipulated by statutes or otherwise inoperative, such decision shall not affect the validity of the remaining portion of this code.*

SECTION 1.2
BUILDING STANDARDS COMMISSION

1.2.2 Alternative materials, design and methods of construction and equipment. *The provisions of this code are not intended to prevent the installation of any material or to prohibit any design or method of construction not specifically prescribed by this code, provided that any such alternative has been approved. An alternative material, design or method of construction shall be approved where the building official finds that the proposed design is satisfactory and complies with the intent of the provisions of this code, and that the material, method or work offered is, for the purpose intended, at least the equivalent of that prescribed in this code in quality, strength, effectiveness, fire resistance, durability and safety.*

SECTION 1.9
DIVISION OF THE STATE ARCHITECT

1.9.1 Division of the State Architect – Access Compliance.

General. *The purpose of this code is to ensure that barrier-free design is incorporated in all buildings, facilities, site work and other improvements to which this code applies in compliance with state law to ensure that these improvements are accessible to and usable by persons with disabilities. Additions, alterations and structural repairs in all buildings and facilities shall comply with these provisions for new buildings, except as otherwise provided and specified herein.*

The provisions of these regulations shall apply to any portable buildings leased or owned by a school district, and shall also apply to temporary and emergency buildings and facilities. Temporary buildings and facilities are not of permanent construction but are extensively used or are essential for public use for a period of time. Examples of temporary buildings or facilities covered include, but are not limited to: reviewing stands, temporary classrooms, bleacher areas, exhibit areas, temporary banking facilities, temporary health screening services or temporary safe pedestrian passageways around a construction site.

In addition, to incorporate standards at least as restrictive as those required by the federal government for barrier-free design under (1) Title III (Public Accommodations and Commercial Facilities), Subpart D (New Construction and Alteration) (see 28 C.F.R., Part 36), and (2) Title II (Public Entities), Section 35.151 (New Construction and Alterations) (see 28 C.F.R., Part 35) both from the Americans with Disabilities Act of 1990, 2004 Americans with Disabilities Act Accessibility Guidelines, as adopted by the US Department of Justice (see 36 C.F.R. Part 1191, Appendices B and D), and (3) under the Fair Housing Amendments Act of 1988. Some of these regulations may be more stringent than state law in order to meet the federal requirement.

1.9.1.1 Application. *See Government Code commencing with Section 4450.*

Publicly funded buildings, structures, sidewalks, curbs and related facilities shall be accessible to and usable by persons with disabilities as follows:

1.9.1.1.1 *All buildings, structures, sidewalks, curbs and related facilities constructed in the state by the use of state, county or municipal funds, or the funds of any political subdivision of the state.*

1.9.1.1.2 *All buildings, structures and facilities that are leased, rented, contracted, sublet or hired by any municipal, county or state division of government, or by a special district.*

1.9.1.1.3 *All publicly funded buildings used for congregate residences or for one- or two-family dwelling unit purposes shall conform to the provisions applicable to living accommodations.*

1.9.1.1.4 *All existing publicly funded buildings and facilities when alterations, structural repairs or additions are made to such buildings or facilities. For detailed requirements on existing buildings, see Chapter 11B, Division 2, Section 11B-202.*

1.9.1.1.5 *With respect to buildings, structures, sidewalks, curbs and related facilities not requiring a building permit, building standards published in the California Building Standards Code relating to access for persons with disabilities and other regulations adopted pursuant to Government Code Section 4450, and in effect at the time construction is commenced, shall be applicable.*

1.9.1.2 Application. *See Health and Safety Code commencing with Section 19952.*

All privately funded public accommodations, as defined and commercial facilities, as defined, shall be accessible to persons with disabilities as follows:

Exception: *Certain types of privately funded multistory buildings do not require installation of an elevator to provide access above and below the first floor. See Chapter 11B.*

1.9.1.2.1 *Any building, structure, facility, complex or improved area, or portions thereof, which are used by the general public.*

1.9.1.2.2 *Any sanitary facilities which are made available for the public, clients or employees in such accommodations or facilities.*

1.9.1.2.3 *Any curb or sidewalk intended for public use that is constructed in this state with private funds.*

1.9.1.2.4 *All existing privately funded public accommodations when alterations, structural repairs or additions are made to such public accommodations as set forth under Chapter 11B.*

1.9.1.3 Application — public housing and private housing available for public use. *See Government Code Sections 4450 and 12955.1(c).*

1.9.1.4 Enforcing agency.

1.9.1.4.1 *The director of the Department of General Services where state funds are utilized for any project or where funds of counties, municipalities or other political subdivisions are utilized for the construction of elementary, secondary or community college projects.*

1.9.1.4.2 *The governing bodies where funds of counties, municipalities or other political subdivisions are utilized except as otherwise provided above.*

1.9.1.4.3 *The building department of every city, county, or city and county within the territorial area of its city, county, or city and county, where private funds are utilized. "Building department" means the department, bureau or officer charged with the enforcement of laws or ordinances regulating the erection or construction, or both the erection and construction, of buildings.*

1.9.1.5 Special conditions for persons with disabilities requiring appeals action ratification. *Whenever reference is made in these regulations to this section, the findings and determinations required to be rendered by the local enforcing agency shall be subject to ratification through an appeals process.*

1.9.1.6 Authority cited. *Government Code Section 4450.*

1.9.1.7 Reference cited. *Government Code Sections 4450 through 4461, 12955.1(c) and Health and Safety Code Sections 18949.1, 19952 through 19959.*

1.9.1.8 Adopting agency identification. *The provision of this code applicable to buildings identified in this Subsection 1.9.1 will be identified in the Matrix Adoption Tables under the acronym DSA-AC.*

CHAPTER 1
SCOPE AND ADMINISTRATION
DIVISION II
SCOPE AND ADMINISTRATION

DSA-AC proposes to carry forward its adoption of specific model code provisions in Chapter 1, Division II, from the 2013 CA Building Code into the 2016 CA Building Code, with existing amendments.

ITEM 1.2.00

CHAPTER 1, DIVISION II – MATRIX ADOPTION TABLE

Adopting Agency		DSA-AC
Adopt entire California Chapter		
Adopt entire California Chapter as amended (amended Sections listed below)		
Adopt only those Sections that are listed below		X
Chapter / Section		
101.1 – 101.4.5		X
104.11		X
111.2		X

ITEM 1.2.01

PART 1—SCOPE AND APPLICATION

SECTION 101
GENERAL

101.1 Title. These regulations shall be known as the Building Code of **[NAME OF JURISDICTION]**, hereinafter referred to as "this code."

101.2 Scope. The provisions of this code shall apply to the construction, alteration, relocation, enlargement, replacement, repair, equipment, use and occupancy, location, maintenance, removal and demolition of every building or structure or any appurtenances connected or attached to such buildings or structures.

Exception: Detached one- and two-family dwellings and multiple single-family dwellings (townhouses) not more than three stories above grade plane in height with a separate means of egress, and their accessory structures not more than three stories above grade plane in height, shall comply with the ~~International~~ *California* Residential Code.

101.2.1 Appendices. Provisions in the appendices shall not apply unless specifically adopted.

101.3 Intent. The purpose of this code is to establish the minimum requirements to provide a reasonable level of safety, public health and general welfare through structural strength, means of egress facilities, stability, sanitation, adequate light and ventilation, energy conservation, and safety to life and property from fire and other hazards attributed to the built environment and to provide a reasonable level of safety to fire fighters and emergency responders during emergency operations.

101.4 Referenced codes. The other codes listed in Sections 101.4.1 through 101.4.7 and referenced elsewhere in this code shall be considered part of the requirements of this code to the prescribed extent of each such reference.

101.4.1 Gas. The provisions of the ~~International Fuel Gas~~ *California Mechanical* Code shall apply to the installation of gas piping from the point of delivery, gas appliances and related accessories as covered in this code. These requirements apply to gas piping systems extending from the point of delivery to the inlet connections of appliances and the installation and operation of residential and commercial gas appliances and related accessories.

101.4.2 Mechanical. The provisions of the ~~International~~ *California* Mechanical Code shall apply to the installation, alterations, repairs and replacement of mechanical systems, including equipment, appliances, fixtures, fittings and/or appurtenances, including ventilating, heating, cooling, air-conditioning and refrigeration systems, incinerators and other energy-related systems.

101.4.3 Plumbing. The provisions of the ~~International~~ *California* Plumbing Code shall apply to the installation, alteration, repair and replacement of plumbing systems, including equipment, appliances, fixtures, fittings and appurtenances, and where connected to a water or sewage system and all aspects of a medical gas system. The provisions of the International Private Sewage Disposal Code shall apply to private sewage disposal systems.

101.4.4 Property maintenance. The provisions of the International Property Maintenance Code shall apply to existing structures and premises; equipment and facilities; light, ventilation, space heating, sanitation, life and fire safety hazards; responsibilities of owners, operators and occupants; and occupancy of existing premises and structures.

101.4.5 Fire prevention. The provisions of the ~~International~~ *California* Fire Code shall apply to matters affecting or relating to structures, processes and premises from the hazard of fire and explosion arising from the storage, handling or use of structures, materials or devices; from conditions hazardous to life, property or public welfare in the occupancy of structures or premises; and from the construction, extension, repair, alteration or removal of fire suppression, automatic sprinkler systems and alarm systems or fire hazards in the structure or on the premises from occupancy or operation.

101.4.6 Energy. The provisions of the ~~International~~ *California* Energy Conservation Code shall apply to all matters governing the design and construction of buildings for energy efficiency.

101.4.7 Existing buildings. The provisions of the ~~International~~ *California Existing Building Code* shall apply to matters governing the *repair*, *alteration*, change of occupancy, *addition* to and relocation of existing buildings.

SECTION 104
DUTIES AND POWERS OF BUILDING OFFICIAL

104.11 Alternative materials, design and methods of construction and equipment. The provisions of this code are not intended to prevent the installation of any material or to prohibit any design or method of construction not specifically prescribed by this code, provided that any such alternative has been approved. An alternative material, design or method of construction shall be approved where the building official finds that the proposed design is satisfactory and complies with the intent of the provisions of this code, and that the material, method or work offered is, for the purpose intended, not less than the equivalent of that prescribed in this code in quality, strength, effectiveness, fire resistance, durability and safety. Where the alternative material, design or method of construction is not approved, the building official shall respond in writing, stating the reasons why the alternative was not approved.

SECTION 111
CERTIFICATE OF OCCUPANCY

111.2 Certificate issued. After the building official inspects the building or structure and does not find violations of the provisions of this code or other laws that are enforced by the department of building safety, the building official shall issue a certificate of occupancy that contains the following:

1. The building permit number.
2. The address of the structure.
3. The name and address of the owner or the owner's authorized agent.
4. A description of that portion of the structure for which the certificate is issued.
5. A statement that the described portion of the structure has been inspected for compliance with the requirements of this code for the occupancy and division of occupancy and the use for which the proposed occupancy is classified.
6. The name of the building official.
7. The edition of the code under which the permit was issued.
8. The use and occupancy, in accordance with the provisions of Chapter 3.
9. The type of construction as defined in Chapter 6.
10. The design occupant load.
11. If an automatic sprinkler system is provided, whether the sprinkler system is required.
12. Any special stipulations and conditions of the building permit.

CHAPTER 2
DEFINITIONS

DSA-AC proposes to carry forward its adoption of specific model code definitions and California amendments in Chapter 2, from the 2013 CA Building Code into the 2016 CA Building Code, with further amendment as indicated.

ITEM 2.00

CHAPTER 2 – MATRIX ADOPTION TABLE

Adopting Agency		DSA-AC
Adopt entire California Chapter		
Adopt entire California Chapter as amended (amended Sections listed below)		
Adopt only those Sections that are listed below		X
Chapter / Section		
202 Access aisle		X
202 Accessibility		X
202 Accessibility function button		X
202 Accessible		X
202 Accessible element		X
202 Accessible means of egress		X
202 Accessible route		X
202 Accessible space		X
202 Adaptable		X
202 Addition (2nd paragraph only)		X
202 Adjusted construction cost		X
202 Administrative authority		X
202 Aisle (2nd paragraph only)		X
202 Alteration		X
202 Amusement attraction		X
202 Amusement ride		X
202 Amusement ride seat		X
202 ANSI		X
202 Approved (2nd paragraph only) (w/o Notes)		X
202 Approved testing agency		X
202 Area of refuge		X
202 Area of sport activity		X
202 Assembly area		X
202 Assistive listening system (ALS)		X
202 Automatic door		X
202 Automatic teller machine (ATM)		X
202 Bathroom		X
202 Blended transition		X
202 Boarding pier		X
202 Boat launch ramp		X
202 Boat slip		X
202 Building (w/o notes)		X
202 Building official		X

202 Catch pool		X
~~202 Carriage unit~~		~~X~~
202 CCR		X
202 Characters		X
202 Children's use		X
202 Circulation path		X
202 Clear		X
202 Clear floor space		X
202 Closed-circuit telephone		X
202 Commercial facilities		X
202 Common use		X
202 Comply with		X
202 Cross slope		X
202 Curb cut		X
202 Curb ramp		X
202 Designated public transportation		X
202 Destination-oriented elevator		X
202 Detectable warning		X
202 Directional sign		X
202 Disability		X
202 Dormitory		X
202 Drive-up electric vehicle (EV) charger		X
202 Electric vehicle (EV)		X
202 Electric vehicle (EV) charger		X
202 Electric vehicle charging space (EVC space)		X
202 Electric vehicle charging station (EVCS)		X
202 Electric vehicle (EV) connector		X
202 Element		X
202 Elevated play component		X
202 Elevator, passenger		X
202 Employee work area		X
202 Enforcing agency		X
202 Entrance		X
202 Equivalent facilitation		X
202 Existing building or facility		X
202 Exit		X
202 Facility		X
202 Functional area		X
202 Gangway		X
202 Golf car passage		X
202 Grab bar		X
202 Grade (adjacent ground elevation)		X
202 Grade break		X
202 Ground floor		X
202 Ground level play component		X
202 Guard (or guardrail)		X
202 Hall call console		X
202 Handrail		X
202 Health care provider		X
202 Historical buildings		X
202 Housing at a place of education		X
202 If, If . . . Then		X

202 International Symbol of Accessibility		X
202 Key station		X
202 Kick plate		X
202 Kitchen or kitchenette		X
202 Lavatory		X
202 Mail boxes		X
202 Marked crossing		X
202 May		X
202 Mezzanine		X
202 Multi-bedroom housing unit		X
202 NFPA		X
202 Nosing		X
202 Occupant load		X
202 Occupiable space		X
202 Open riser		X
202 Operable part		X
202 Passenger elevator		X
202 Path of travel		X
202 Pedestrian		X
202 Pedestrian way		X
202 Permanent		X
202 Permit		X
202 Pictogram		X
202 Place of public accommodation		X
202 Platform		X
202 Platform (wheelchair) lift		X
202 Play area		X
202 Play component		X
202 Point-of-sale device		X
202 Powder room		X
202 Power-assisted door		X
202 Private building or facility		X
202 Professional office of a health care provider		X
202 Public building or facility		X
202 Public entity		X
202 Public entrance		X
202 Public housing		X
202 Public use		X
202 Public-use areas		X
202 Public way		X
202 Qualified historic building or facility		X
202 Ramp		X
202 Reasonable portion		X
202 Recommend		X
202 Remodeling		X
202 Repair		X
202 Residential dwelling unit		X
202 Restricted entrance		X
202 Riser		X
202 Running slope		X
202 Seismic mitigation		X
202 Self-service storage		X

202 Service entrance		X
202 Shall		X
202 Shopping center (or shopping mall)		X
202 Should		X
202 Sidewalk		X
~~202 Signage~~		~~X~~
202 Sign		X
202 Sink		X
202 Site		X
202 Sleeping accommodations		X
202 Soft contained play structure		X
202 Space		X
202 Specified public transportation		X
202 Stage		X
202 Stair		X
202 Stairway		X
202 Story (2nd paragraph only)		X
202 Structural frame		X
202 Structurally impracticable		X
202 Structure		X
202 Tactile		X
202 Tactile sign		X
202 Technically infeasible		X
202 Teeing ground		X
202 Temporary		X
202 Text telephone		X
202 Transfer device		X
202 Transient lodging		X
202 Transit boarding platform		X
202 Transition plate		X
202 Tread		X
202 TTY		X
202 Unreasonable hardship		X
202 Use zone		X
202 Valuation threshold		X
202 Variable message signs (VMS)		X
202 Variable message sign (VMS) characters		X
202 Vehicular way		X
202 Walk		X
202 Wet bar		X
202 Wheelchair		X
202 Wheelchair space		X
202 Work area equipment		X
202 Workstation (2nd paragraph only)		X

ITEM 2.01

SECTION 202
DEFINITIONS

ACCESS AISLE. [DSA-AC] *An accessible pedestrian space adjacent to or between parking spaces that provides clearances in compliance with this code.*

ACCESSIBILITY. [DSA-AC] *Accessibility is the combination of various elements in a building, facility, site, or area, or portion thereof which allows access, circulation and the full use of the building and facilities by persons with disabilities in compliance with this code.*

ACCESSIBILITY FUNCTION BUTTON. [DSA-AC] *A button on an elevator hall call console in a destination-oriented elevator system that when pressed will activate a series of visual and verbal prompts and announcements providing instruction regarding hall call console operation and direction to an assigned elevator.*

ACCESSIBLE ELEMENT. [DSA-AC] *An element specified by the regulations adopted by the Division of the State Architect-Access Compliance.*

ACCESSIBLE MEANS OF EGRESS. A continuous and unobstructed way of egress travel from any accessible point in a building or facility to a public way.

ACCESSIBLE SPACE. [DSA-AC] *A space that complies with the accessibility provisions of this code.*

ADAPTABLE. [DSA-AC] *Capable of being readily modified and made accessible.*

ADDITION. ...
[DSA-AC] *An expansion, extension or increase in the gross floor area or height of a building or facility.*

ADMINISTRATIVE AUTHORITY. [DSA-AC] *A governmental agency that adopts or enforces regulations and guidelines for the design, construction or alteration of buildings and facilities.*

AISLE. ...
[DSA-AC] *A circulation path between objects such as seats, tables, merchandise, equipment, displays, shelves, desks, etc., that provides clearances in compliance with this code.*

ALTERATION. ...
[DSA-AC] *A change, addition or modification in construction, change in occupancy or use, or structural repair to an existing building or facility. Alterations include, but are not limited to, remodeling, renovation, rehabilitation, reconstruction, historic restoration, resurfacing of circulation paths or vehicular ways, changes or rearrangement of the structural parts or elements, and changes or rearrangement in the plan configuration of walls and full-height partitions. Normal maintenance, reroofing, painting or wallpapering, or changes to mechanical and electrical systems are not alterations unless they affect the usability of the building or facility.*

AMUSEMENT ATTRACTION. [DSA-AC] *Any facility, or portion of a facility, located within an amusement park or theme park which provides amusement without the use of an amusement device. Amusement attractions include, but are not limited to, fun houses, barrels and other attractions without seats.*

AMUSEMENT RIDE. [DSA-AC] *A system that moves persons through a fixed course within a defined area for the purpose of amusement.*

AMUSEMENT RIDE SEAT. [DSA-AC] *A seat that is built-in or mechanically fastened to an amusement ride intended to be occupied by one or more passengers.*

ANSI. [DSA-AC] *The American National Standards Institute.*

APPROVED. ...
[DSA-AC] *"Approved" means meeting the approval of the enforcing agency, except as otherwise provided*

by law, when used in connection with any system, material, type of construction, fixture or appliance as the result of investigations and tests conducted by the agency, or by reason of accepted principles or tests by national authorities or technical, health or scientific organizations or agencies.

APPROVED TESTING AGENCY. [DSA-AC] *Any agency, which is determined by the enforcing agency, except as otherwise provided by law, to have adequate personnel and expertise to carry out the testing of systems, materials, type of construction, fixtures or appliances.*

AREA OF REFUGE. An area where persons unable to use stairways can remain temporarily to await instructions or assistance during emergency evacuation.

ASSEMBLY AREA. [DSA-AC] *A building or facility, or portion thereof, used for the purpose of entertainment, educational or civic gatherings, or similar purposes. For the purposes of these requirements, assembly areas include, but are not limited to, classrooms, lecture halls, courtrooms, public meeting rooms, public hearing rooms, legislative chambers, motion picture houses, auditoria, theaters, playhouses, dinner theaters, concert halls, centers for the performing arts, amphitheaters, arenas, stadiums, grandstands or convention centers.*

ASSISTIVE LISTENING SYSTEM (ALS). [DSA-AC] *An amplification system utilizing transmitters, receivers and coupling devices to bypass the acoustical space between a sound source and a listener by means of induction loop, radio frequency, infrared or direct-wired equipment.*

AUTOMATIC DOOR. [DSA-AC] *A door equipped with a power-operated mechanism and controls that open and close the door automatically upon receipt of a momentary actuating signal. The switch that begins the automatic cycle may be a photoelectric device, floor mat or manual switch.*

AUTOMATIC TELLER MACHINE (ATM). [DSA-AC] *Any electronic information processing device that accepts or dispenses cash in connection with a credit, deposit or convenience account. The term does not include devices used solely to facilitate check guarantees or check authorizations, or which are used in connection with the acceptance or dispensing of cash on a person-to-person basis, such as by a store cashier.*

BATHROOM. [DSA-AC] *For the purposes of Chapters 11A and 11B, a room which includes a water closet (toilet), a lavatory, and a bathtub and/or a shower. It does not include single-fixture facilities or those with only a water closet and lavatory. It does include a compartmented bathroom. A compartmented bathroom is one in which the fixtures are distributed among interconnected rooms. A compartmented bathroom is considered a single unit and is subject to the requirements of Chapters 11A and 11B.*

BLENDED TRANSITION. [DSA-AC] *A raised pedestrian street crossing, depressed corner or similar connection between the pedestrian access route at the level of the sidewalk and the level of the pedestrian street crossing that has a grade of 5 percent or less.*

BOARDING PIER. [DSA-AC] *A portion of a pier where a boat is temporarily secured for the purpose of embarking or disembarking.*

BOAT LAUNCH RAMP. [DSA-AC] *A sloped surface designed for launching and retrieving trailered boats and other water craft to and from a body of water.*

BOAT SLIP. [DSA-AC] *That portion of a pier, main pier, finger pier, or float where a boat is moored for the purpose of berthing, embarking, or disembarking.*

BUILDING. Any structure used or intended for supporting or sheltering any use or occupancy.

BUILDING OFFICIAL. The officer or other designated authority charged with the administration and enforcement of this code, or a duly authorized representative.

CATCH POOL. [DSA-AC] *A pool or designated section of a pool used as a terminus for water slide flumes.*

CCR. [DSA-AC] *The California Code of Regulations.*

CHARACTERS. [DSA-AC] *Letters, numbers, punctuation marks and typographic symbols.*

CHILDREN'S USE. [DSA-AC] *Describes spaces and elements specifically designed for use primarily by people 12 years old and younger.*

CIRCULATION PATH. ...
[DSA-AC] *An exterior or interior way of passage provided for pedestrian travel, including but not limited to, walks, hallways, courtyards, elevators, platform lifts, ramps, stairways and landings.*

CLEAR. [DSA-AC] *Unobstructed.*

CLEAR FLOOR SPACE. [DSA-AC] *The minimum unobstructed floor or ground space required to accommodate a single, stationary wheelchair and occupant.*

CLOSED-CIRCUIT TELEPHONE. [DSA-AC] *A telephone with a dedicated line such as a house phone, courtesy phone or phone that must be used to gain entry to a facility.*

COMMERCIAL FACILITIES. [DSA-AC] *Facilities whose operations will affect commerce and are intended for non-residential use by a private entity. Commercial facilities shall not include (1) facilities that are covered or expressly exempted from coverage under the Fair Housing Act of 1968, as amended (42 U.S.C. 3601 - 3631); (2) aircraft; or (3) railroad locomotives, railroad freight cars, railroad cabooses, commuter or intercity passenger rail cars (including coaches, dining cars, sleeping cars, lounge cars, and food service cars), any other railroad cars described in Section 242 of the Americans With Disabilities Act or covered under Title II of the Americans With Disabilities Act, or railroad rights-of-way. For purposes of this definition, "rail" and "railroad" have the meaning given the term "railroad" in Section 202(e) of the Federal Railroad Safety Act of 1970 (45 U.S.C. 431(e)).*

COMMON USE. Interior or exterior circulation paths, rooms, spaces or elements that are not for public use and are made available for the shared use of two or more people.

COMPLY WITH. [DSA-AC] *Comply with means to meet one or more provisions of this code.*

CROSS SLOPE. [DSA-AC] *The slope that is perpendicular to the direction of travel.*

CURB CUT. [DSA-AC] *An interruption of a curb at a pedestrian way, which separates surfaces that are substantially at the same elevation.*

CURB RAMP. [DSA-AC] *A sloping pedestrian way, intended for pedestrian traffic, which provides access between a walk or sidewalk and a surface located above or below an adjacent curb face.*

DESIGNATED PUBLIC TRANSPORTATION. [DSA-AC] *Transportation provided by a public entity (other than public school transportation) by bus, rail, or other conveyance (other than transportation by aircraft or intercity or commuter rail transportation) that provides the general public with general or special service, including charter service, on a regular and continuing basis.*

DESTINATION-ORIENTED ELEVATOR. [DSA-AC] *Destination-oriented elevators are operated by the user selecting a destination floor at a hall call console located at or near an elevator landing. The destination-oriented elevator system then assigns an elevator car which transports the user to the selected destination floor. Destination-oriented elevators do not provide floor selection within elevator cars.*

DETECTABLE WARNING. ...
[DSA-AC] *A standardized surface feature built in or applied to walking surfaces or other elements to warn of hazards on a circulation path.*

DIRECTIONAL SIGN. [DSA-AC] *A publicly displayed notice which indicates by use of words or symbols a recommended direction or route of travel.*

DISABILITY. [DSA-AC] *Disability is (1) a physical or mental impairment that limits one or more of the major life activities of an individual, (2) a record of such an impairment, or (3) being regarded as having such an impairment.*

DORMITORY. A space in a building where group sleeping accommodations are provided in one room, or in a series of closely associated rooms, for persons not members of the same family group, under joint occupancy and single management, as in college dormitories or fraternity houses.

ELEMENT. [DSA-AC] *An architectural or mechanical component of a building, facility, space or site.*

ELEVATED PLAY COMPONENT. [DSA-AC] *A play component that is approached above or below grade and that is part of a composite play structure consisting of two or more play components attached or functionally linked to create an integrated unit providing more than one play activity.*

ELEVATOR, PASSENGER. [DSA-AC] *An elevator used primarily to carry passengers.*

EMPLOYEE WORK AREA. All or any portion of a space used only by employees and used only for work. Corridors, toilet rooms, kitchenettes and break rooms are not employee work areas.

ENFORCING AGENCY. [DSA-AC] *Enforcing Agency is the designated department or agency as specified by statute or regulation.*

ENTRANCE. [DSA-AC] *Any access point to a building or portion of a building or facility used for the purpose of entering. An entrance includes the approach walk, the vertical access leading to the entrance platform; the entrance platform itself, vestibule if provided, the entry door or gate, and the hardware of the entry door or gate.*

EQUIVALENT FACILITATION. [DSA-AC] *The use of designs, products, or technologies as alternatives to those prescribed, resulting in substantially equivalent or greater accessibility and usability.*

> ***Note:*** *In determining equivalent facilitation, consideration shall be given to means that provide for the maximum independence of persons with disabilities while presenting the least risk of harm, injury or other hazard to such persons or others.*

EXISTING BUILDING OR FACILITY. [DSA-AC] *A facility in existence on any given date, without regard to whether the facility may also be considered newly constructed or altered under this code.*

EXIT. That portion of a means of egress system between the exit access and the exit discharge or public way. Exit components include exterior exit doors at the level of exit discharge, interior exit stairways and ramps, exit passageways, exterior exit stairways and ramps and horizontal exits.

FACILITY. ...
[DSA-AC] *All or any portion of buildings, structures, site improvements, elements, and pedestrian routes or vehicular ways located on a site.*

FUNCTIONAL AREA. [DSA-AC] *A room, space or area intended or designated for a group of related activities or processes.*

GANGWAY. [DSA-AC] *A variable-sloped pedestrian walkway that links a fixed structure or land with a floating structure. Gangways that connect to vessels are not addressed by this code.*

GOLF CAR PASSAGE. [DSA-AC] *A continuous passage on which a motorized golf car can operate.*

GRAB BAR. [DSA-AC] *A bar for the purpose of being grasped by the hand for support.*

GRADE (Adjacent Ground Elevation). [DSA-AC] *The lowest point of elevation of the finished surface of the ground, paving or sidewalk within the area between the building and the property line or, when the property line is more than 5 feet (1524 mm) from the building, between the building and a line 5 feet (1524 mm) from the building. See Health and Safety Code Section 19955.3(d).*

GRADE BREAK. [DSA-AC] *The line where two surface planes with different slopes meet.*

GROUND FLOOR. [DSA-AC] *The floor of a building with a building entrance on an accessible route. A building may have one or more ground floors.*

GROUND LEVEL PLAY COMPONENT. [DSA-AC] *A play component that is approached and exited at the ground level.*

GUARD ***[DSA-AC] OR GUARDRAIL.*** A building component or a system of building components located at or near the open sides of elevated walking surfaces that minimizes the possibility of a fall from the walking surface to a lower level.

HALL CALL CONSOLE. [DSA-AC] *An elevator call user interface exclusive to a destination-oriented elevator system that requires the user to select a destination floor prior to entering the elevator car.*

HANDRAIL. A horizontal or sloping rail intended for grasping by the hand for guidance or support.

HEALTH CARE PROVIDER. [DSA-AC] *See "Professional Office of a Health Care Provider"*

HISTORIC BUILDINGS. ...
[DSA-AC] *See "Qualified historical building or property," C.C.R., Title 24, Part 8.*

HOUSING AT A PLACE OF EDUCATION. [DSA-AC] *Housing operated by or on behalf of an elementary, secondary, undergraduate, or postgraduate school, or other place of education, including dormitories, suites, apartments, or other places of residence.*

IF, IF . . . THEN. [DSA-AC] *The terms "if" and "if ... then" denotes a specification that applies only when the conditions described are present.*

INTERNATIONAL SYMBOL OF ACCESSIBILITY. [DSA-AC] *The symbol adopted by Rehabilitation International's 11th World Congress for the purpose of indicating that buildings and facilities are accessible to persons with disabilities.*

KEY STATION. [DSA-AC] *Certain rapid and light rail stations, and commuter rail stations, as defined*

under criteria established by the Department of Transportation in 49 CFR 37.47 and 49 CFR 37.51, respectively.

KICK PLATE. [DSA-AC] *An abrasion-resistant plate affixed to the bottom portion of a door to prevent a trap condition and protect its surface.*

KITCHEN OR KITCHENETTE. [DSA-AC] *A room, space or area with equipment for the preparation and cooking of food.*

LAVATORY. [DSA-AC] *A fixed bowl or basin with running water and drainpipe, as in a toilet or bathing facility, for washing or bathing purposes. (As differentiated from the definition of "Sink".)*

MAIL BOXES. [DSA-AC] *Receptacles for the receipt of documents, packages, or other deliverable matter. Mail boxes include, but are not limited to, post office boxes and receptacles provided by commercial mail-receiving agencies, apartment facilities or schools.*

MARKED CROSSING. [DSA-AC] *A crosswalk or other identified path intended for pedestrian use in crossing a vehicular way.*

MAY. [DSA-AC] *May denotes an option or alternative.*

MEZZANINE. ...
[DSA-AC] *An intermediate level or levels between the floor and ceiling of any story with an aggregate floor area of not more than one-third of the area of the room or space in which the level or levels are located. Mezzanines have sufficient elevation that space for human occupancy can be provided on the floor below.*

MULTI-BEDROOM HOUSING UNIT. [DSA-AC] *A housing unit, intended for use by students at a place of education, with a kitchen and/or toilet and bathing rooms within the unit, such as an apartment, or dormitory. Multi-bedroom housing units are separate from one another and from common use spaces within a building.*

NFPA. [DSA-AC] *The National Fire Protection Association.*

NOSING. The leading edge of treads of stairs and of landings at the top of stairway flights.

OCCUPANT LOAD. The number of persons for which the means of egress of a building or portion thereof is designed.

OCCUPIABLE SPACE. A room or enclosed space designed for human occupancy in which individuals congregate for amusement, educational or similar purposes or in which occupants are engaged at labor, and which is equipped with means of egress and light and ventilation facilities meeting the requirements of this code.

OPEN RISER. [DSA-AC] *The space between two adjacent stair treads not closed by a riser.*

OPERABLE PART. [DSA-AC] *A component of an element used to insert or withdraw objects, or to activate, deactivate, or adjust the element.*

PASSENGER ELEVATOR. [DSA-AC] *See "Elevator, passenger"*

PATH OF TRAVEL. [DSA-AC] *An identifiable accessible route within an existing site, building or facility by means of which a particular area may be approached, entered and exited, and which connects a particular area with an exterior approach (including sidewalks, streets, and parking areas), an entrance to*

the facility, and other parts of the facility. When alterations, structural repairs or additions are made to existing buildings or facilities, the term "path of travel" also includes the toilet and bathing facilities, telephones, drinking fountains and signs serving the area of work.

PEDESTRIAN. [DSA-AC] *An individual who moves in walking areas with or without the use of walking assistive devices such as crutches, leg braces, wheelchairs, white cane, service animal, etc.*

PEDESTRIAN WAY. [DSA-AC] *A route by which a pedestrian may pass.*

PERMANENT. [DSA-AC] *Facilities which, are intended to be used for periods longer than those designated in this code under the definition of "Temporary."*

PERMIT. An official document or certificate issued by the building official that authorizes performance of a specified activity.

PICTOGRAM. [DSA-AC] *A pictorial symbol that represents activities, facilities, or concepts.*

PLACE OF PUBLIC ACCOMMODATION. [DSA-AC] *A facility operated by a private entity whose operations affect commerce and fall within at least one of the following categories:*

1. *Place of lodging, except for an establishment located within a facility that contains not more than five rooms for rent or hire and that actually is occupied by the proprietor of the establishment as the residence of the proprietor. For purposes of this code, a facility is a "place of lodging" if it is*

   (i) An inn, hotel, or motel; or

   (ii) A facility that

   (A) Provides guest rooms for sleeping for stays that primarily are short-term in nature (generally 30 days or less) where the occupant does not have the right to return to a specific room or unit after the conclusion of his or her stay; and

   (B) Provides guest rooms under conditions and with amenities similar to a hotel, motel, or inn, including the following:

   (1) On- or off-site management and reservations service;

   (2) Rooms available on a walk-up or call-in basis;

   (3) Availability of housekeeping or linen service; and

   (4) Acceptance of reservations for a guest room type without guaranteeing a particular unit or room until check-in, and without a prior lease or security deposit.

2. *A restaurant, bar, or other establishment serving food or drink;*

3. *A motion picture house, theater, concert hall, stadium, or other place of exhibition or entertainment;*

4. *An auditorium, convention center, lecture hall, or other place of public gathering;*

5. *A bakery, grocery store, clothing store, hardware store, shopping center, or other sales or rental establishment;*

6. *A Laundromat, dry-cleaner, bank, barber shop, beauty shop, travel service, shoe repair service, funeral parlor, gas station, office of an accountant or lawyer, pharmacy, insurance office, professional office of a health care provider, hospital, or other service establishment;*

7. *A terminal, depot, or other station used for specified public transportation;*

8. *A museum, library, gallery, or other place of public display or collection;*

9. *A park, zoo, amusement park, or other place of recreation;*

10. *A nursery, elementary, secondary, undergraduate, or postgraduate private school, or other place of education;*

11. *A day care center, senior citizen center, homeless shelter, food bank, adoption agency, or other social service center establishment;*

12. *A gymnasium, health spa, bowling alley, golf course, or other place of exercise or recreation;*

13. *A religious facility;*

14. *An office building; and*

15. *A public curb or sidewalk.*

PLATFORM. A raised area within a building used for worship, the presentation of music, plays or other entertainment; the head table for special guests; the raised area for lecturers and speakers; boxing and wrestling rings; theater-in-the-round stages; and similar purposes wherein, other than horizontal sliding curtains, there are no overhead hanging curtains, drops, scenery or stage effects other than lighting and sound. A temporary platform is one installed for not more than 30 days.

PLATFORM (WHEELCHAIR) LIFT. [DSA-AC] *A hoisting and lowering mechanism equipped with a car or platform or support that serves two landings of a building or structure and is designed to carry a passenger or passengers and/or luggage or other material a vertical distance as may be allowed.*

PLAY AREA. [DSA-AC] *A portion of a site containing play components designed and constructed for children.*

PLAY COMPONENT. [DSA-AC] *An element intended to generate specific opportunities for play, socialization, or learning. Play components are manufactured or natural; and are stand-alone or part of a composite play structure.*

POINT-OF-SALE DEVICE. [DSA-AC] *A device used for the purchase of a good or service where a personal identification number (PIN), zip code or signature is required.*

POWDER ROOM. [DSA-AC] *A room containing a water closet (toilet) and a lavatory, and which is not defined as a bathroom.*

POWER-ASSISTED DOOR. [DSA-AC] *A door used for human passage with a mechanism that helps to open the door, or relieves the opening resistance of a door, upon the activation of a switch or a continued force applied to the door itself.*

PRIVATE BUILDING OR FACILITY. [DSA-AC] *A place of public accommodation or a commercial*

building or facility subject to Chapter 1, Section 1.9.1.2.

PUBLIC BUILDING OR FACILITY. [DSA-AC] *A building or facility or portion of a building or facility designed, constructed, or altered by, on behalf of, or for the use of a public entity subject to Chapter 1, Section 1.9.1.1.*

PUBLIC ENTITY. [DSA-AC] *Any state or local government; any department, agency, special-purpose district, or other instrumentality of a state or local government.*

PUBLIC ENTRANCE. An entrance that is not a service entrance or a restricted entrance.

PUBLIC HOUSING. [DSA-AC] *Housing facilities owned, operated, or constructed by, for or on behalf of a public entity including but not limited to the following:*

1. *Publically owned and/or operated one- or two- family dwelling units or congregate residences;*
2. *Publically owned and/or operated buildings or complexes with three or more residential dwellings units;*
3. ***Reserved.***
4. *Publically owned and/or operated homeless shelters, group homes and similar social service establishments;*
5. *Publically owned and/or operated transient lodging, such as hotels, motels, hostels and other facilities providing accommodations of a short term nature of not more than 30 days duration;*
6. *Housing at a place of education owned or operated by a public entity, such as housing on or serving a public school, public college or public university campus;*
7. *Privately owned housing made available for public use as housing.*

PUBLIC USE. [DSA-AC] *Interior or exterior rooms, spaces or elements that are made available to the public. Public use may be provided at a building or facility that is privately or publicly owned. Private interior or exterior rooms, spaces or elements associated with a residential dwelling unit provided by a public housing program or in a public housing facility are not public use areas and shall not be required to be made available to the public. In the context of public housing, public use is the provision of housing programs by, for or on behalf of a public entity.*

PUBLIC WAY. A street, alley or other parcel of land open to the outside air leading to a street, that has been deeded, dedicated or otherwise permanently appropriated to the public for public use and which has a clear width and height of not less than 10 feet (3048 mm).

QUALIFIED HISTORIC BUILDING OR FACILITY. [DSA-AC] *A building or facility that is listed in or eligible for listing in the National Register of Historic Places, or designated as historic under an appropriate State or local law. See C.C.R. Title 24, Part 8.*

RAMP. A walking surface that has a running slope steeper than one unit vertical in 20 units horizontal (5-percent slope).

REASONABLE PORTION. [DSA-AC] *That segment of a building, facility, area, space or condition, which would normally be necessary if the activity therein is to be accessible by persons with disabilities.*

RECOMMEND. [DSA-AC] *Does not require mandatory acceptance, but identifies a suggested action that shall be considered for the purpose of providing a greater degree of accessibility to persons with disabilities.*

REMODELING. [DSA-AC] *See "Alteration."*

REPAIR. The reconstruction or renewal of any part of an existing building for the purpose of its maintenance or to correct damage.

RESIDENTIAL DWELLING UNIT. [DSA-AC] *A unit intended to be used as a residence that is primarily long-term in nature. Residential dwelling units do not include transient lodging, inpatient medical care, licensed long-term care, and detention or correctional facilities.*

RESTRICTED ENTRANCE. An entrance that is made available for common use on a controlled basis, but not public use, and that is not a service entrance.

RISER. [DSA-AC] *The upright part between two adjacent stairs treads.*

RUNNING SLOPE. [DSA-AC] *The slope that is parallel to the direction of travel. (As differentiated from the definition of "Cross Slope".)*

SELF-SERVICE STORAGE. [DSA-AC] *Building or facility designed and used for the purpose of renting or leasing individual storage spaces to customers for the purpose of storing and removing personal property on a self-service basis.*

SERVICE ENTRANCE. An entrance intended primarily for delivery of goods or services.

SHALL. [DSA-AC] *Denotes a mandatory specification or requirement.*

SHOPPING CENTER (or SHOPPING MALL). [DSA-AC] *One or more sales or rental establishments or stores. A shopping center may include a series of buildings on a common site, connected by a common pedestrian access route on, above or below the ground floor, that is either under common ownership or common control or developed either as one project or as a series of related projects. For the purposes of this section, "shopping center" or "shopping mall" includes a covered mall building.*

SHOULD. [DSA-AC] *Denotes an advisory specification or recommendation.*

SIDEWALK. [DSA-AC] *A surfaced pedestrian way contiguous to a street used by the public. (As differentiated from the definition of "Walk".)*

SINK. [DSA-AC] *A fixed bowl or basin with running water and drainpipe, as in a kitchen or laundry, for washing dishes, clothing, etc. (As differentiated from the definition of "Lavatory".)*

SITE. A parcel of land bounded by a lot line or a designated portion of a public right-of-way.

SLEEPING ACCOMMODATIONS. [DSA-AC] *Rooms intended and designed for sleeping.*

SOFT CONTAINED PLAY STRUCTURE. [DSA-AC] *A play structure made up of one or more play components where the user enters a fully enclosed play environment that utilizes pliable materials, such as plastic, netting, or fabric.*

SPACE. [DSA-AC] *A definable area, such as, a room, toilet room, hall, assembly area, entrance, storage room, alcove, courtyard, or lobby.*

SPECIFIED PUBLIC TRANSPORTATION. [DSA-AC] *Transportation by bus, rail, or any other conveyance (other than aircraft) provided by a private entity to the general public, with general or special service (including charter service) on a regular and continuing basis.*

STAGE. A space within a building utilized for entertainment or presentations, which includes overhead hanging curtains, drops, scenery or stage effects other than lighting and sound.

STAIR. A change in elevation, consisting of one or more risers.

STAIRWAY. One or more flights of stairs, either exterior or interior, with the necessary landings and platforms connecting them, to form a continuous and uninterrupted passage from one level to another.

STORY. ...
[DSA-AC] *That portion of a building or facility designed for human occupancy included between the upper surface of a floor and upper surface of the floor or roof next above. A story containing one or more mezzanines has more than one floor level. If the finished floor level directly above a basement or unused under-floor space is more than six feet (1829 mm) above grade for more than 50 percent of the total perimeter or is more than 12 feet (3658 mm) above grade at any point, the basement or unused under-floor space shall be considered as a story.*

STRUCTURAL FRAME. [DSA-AC] *The columns and the girders, beams and trusses having direct connections to the columns and all other members that are essential to the stability of the building or facility as a whole.*

STRUCTURE. That which is built or constructed.

TACTILE. [DSA-AC] *An object that can be perceived using the sense of touch.*

TACTILE SIGN. [DSA-AC] *A sign containing raised characters and/or symbols and accompanying Braille.*

TEEING GROUND. [DSA-AC] *In golf, the starting place for the hole to be played.*

TEMPORARY. [DSA-AC] *Buildings and facilities intended for use at one location for not more than one year and seats intended for use at one location for not more than 90 days.*

TEXT TELEPHONE. [DSA-AC] *Machinery or equipment that employs interactive text-based communications through the transmission of coded signals across the standard telephone network. Text telephones can include, for example, devices known as TTYs (teletypewriters) or computers.*

TRANSFER DEVICE. [DSA-AC] *Equipment designed to facilitate the transfer of a person from a wheelchair or other mobility aid to and from an amusement ride seat.*

TRANSIENT LODGING. [DSA-AC] *A building or facility containing one or more guest room(s) for sleeping that provides accommodations that are primarily short-term in nature (generally 30 days or less). Transient lodging does not include residential dwelling units intended to be used as a residence, inpatient medical care facilities, licensed long-term care facilities, detention or correctional facilities, or private buildings or facilities that contain no more than five rooms for rent or hire and that are actually occupied by the proprietor as the residence of such proprietor. See also the definition of Place of Public Accommodation.*

TRANSIT BOARDING PLATFORM. [DSA-AC] *A horizontal, generally level surface, whether raised above, recessed below or level with a transit rail, from which persons embark/disembark a fixed rail*

vehicle.

TRANSITION PLATE. [DSA-AC] *A sloping pedestrian walking surface located at the end(s) of a gangway.*

TREAD. [DSA-AC] *The horizontal part of a step.*

TTY. [DSA-AC] *An abbreviation for teletypewriter. Machinery that employs interactive text-based communication through the transmission of coded signals across the telephone network. TTYs may include, for example, devices known as TDDs (telecommunication display devices or telecommunication devices for deaf persons) or computers with special modems. TTYs are also called text telephones.*

UNREASONABLE HARDSHIP. [DSA-AC] *When the enforcing agency finds that compliance with the building standard would make the specific work of the project affected by the building standard infeasible, based on an overall evaluation of the following factors:*

1. *The cost of providing access.*
2. *The cost of all construction contemplated.*
3. *The impact of proposed improvements on financial feasibility of the project.*
4. *The nature of the accessibility which would be gained or lost.*
5. *The nature of the use of the facility under construction and its availability to persons with disabilities.*

The details of any finding of unreasonable hardship shall be recorded and entered in the files of the enforcing agency.

USE ZONE. [DSA-AC] *The ground level area beneath and immediately adjacent to a play structure or play equipment that is designated by ASTM F 1487 for unrestricted circulation around the play equipment and where it is predicted that a user would land when falling from or exiting the play equipment.*

VALUATION THRESHOLD. [DSA-AC] *An annually adjusted, dollar-amount figure used in part to determine the extent of required path of travel upgrades. The baseline valuation threshold of $50,000 is based on the January 1981, "ENR US20 Cities" Average Construction Cost Index (CCI) of 3372.02 as published in Engineering News Record, McGraw Hill Publishing Company. The current valuation threshold is determined by multiplying the baseline valuation threshold by a ratio of the current year's January CCI to the baseline January 1981 CCI.*

VARIABLE MESSAGE SIGNS (VMS). [DSA-AC] *Electronic signs that have a message with the capacity to change by means of scrolling, streaming, or paging across a background.*

VARIABLE MESSAGE SIGN (VMS) CHARACTERS. [DSA-AC] *Characters of an electronic sign are composed of pixels in an array. High resolution VMS characters have vertical pixel counts of 16 rows or greater. Low resolution VMS characters have vertical pixel counts of 7 to 15 rows.*

VEHICULAR WAY. [DSA-AC] *A route provided for vehicular traffic, such as in a street, driveway, or parking facility.*

WALK. [DSA-AC] *An exterior prepared surface for pedestrian use, including pedestrian areas such as plazas and courts. (As differentiated from the definition of "Sidewalk".)*

WET BAR. [DSA-AC] *An area or space with a counter equipped with a sink and running water but without cooking facilities.*

WHEELCHAIR. [DSA-AC] *A chair mounted on wheels to be propelled by its occupant manually or with the aid of electric power, of a size and configuration conforming to the recognized standard models of the trade.*

WHEELCHAIR SPACE. A space for a single wheelchair and its occupant.

WORKSTATION. ...
[DSA-AC] *An area defined by equipment and/or work surfaces intended for use by employees only, and generally for one or a small number of employees at a time. Examples include ticket booths; the employee side of grocery store check stands; the bartender area behind a bar; the employee side of snack bars, sales counters and public counters; guardhouses; toll booths; kiosk vending stands; lifeguard stations; maintenance equipment closets; counter and equipment areas in restaurant kitchens; file rooms; storage areas; etc.*

WORK AREA EQUIPMENT. [DSA-AC] *Any machine, instrument, engine, motor, pump, conveyor, or other apparatus used to perform work. As used in this document, this term shall apply only to equipment that is permanently installed or built-in in employee work areas. Work area equipment does not include passenger elevators and other accessible means of vertical transportation.*

ITEM 2.02

SECTION 202
DEFINITIONS

ACCESSIBLE. ~~A site, building, facility or portion thereof that complies with Chapter 11.~~
[DSA-AC] *A site, building, facility, or portion thereof that is approachable and usable by persons with disabilities in compliance with this code.*

ITEM 2.03

SECTION 202
DEFINITIONS

ACCESSIBLE ROUTE. ~~A continuous, unobstructed path that complies with Chapter 11.~~
[DSA-AC] *A continuous unobstructed path connecting accessible elements and spaces of an accessible site, building or facility that can be negotiated by a person with a disability using a wheelchair, and that is also safe for and usable by persons with other disabilities. Interior accessible routes may include corridors, hallways, floors, ramps, elevators and lifts. Exterior accessible routes may include parking access aisles, curb ramps, crosswalks at vehicular ways, walks, ramps and lifts.*

ITEM 2.04

SECTION 202
DEFINITIONS

ADJUSTED CONSTRUCTION COST. [DSA-AC] *All costs directly related to the construction of a project, including labor, material, equipment, services, utilities, contractor financing, contractor overhead and profit, and construction management costs. The costs shall not be reduced by the value of components, assemblies, building equipment or construction not directly associated with accessibility or usability. The*

adjusted construction cost shall not include; project management fees and expenses, architectural and engineering fees, testing and inspection fees, and utility connection or service district fees.

ITEM 2.04.01 – RELATED CODE AMENDMENT

CHAPTER 11B
DIVISION 1: APPLICATION AND ADMINISTRATION

11B-106.5 Defined terms. ...

ADJUSTED CONSTRUCTION COST

ITEM 2.04.02 – RELATED CODE AMENDMENT

See related code amendment ITEM 11B.01 to

CHAPTER 11B – DIVISION 2: SCOPING REQUIREMENTS
11B-202 Existing buildings and facilities
11B-202.4 Path of travel requirements in alterations, additions and structural repairs. Exception 8

ITEM 2.05

SECTION 202
DEFINITIONS

AREA OF SPORT ACTIVITY. That portion of an indoor or outdoor space where the play or practice of a sport occurs.
~~*[DSA-AC] That portion of a room or space where the play or practice of a sport occurs.*~~

ITEM 2.06

WITHDRAWN

ITEM 2.07

SECTION 202
DEFINITIONS

PROFESSIONAL OFFICE OF A HEALTH CARE PROVIDER. [DSA-AC] ~~*See Chapter 11B.*~~ *A location where a person or entity, regulated by the State to provide professional services related to the physical or mental health of an individual, makes such services available to the public. The facility housing the professional office of a health care provider only includes floor levels housing at least one health care provider, or any floor level designed or intended for use by at least one health care provider.*

ITEM 2.08

SECTION 202
DEFINITIONS

PUBLIC USE AREAS. ...
[DSA-AC] Interior or exterior rooms or spaces of a building or facility that are made available to the general public and do not include common use areas. Public use areas may be provided at a building or facility that is privately or publicly owned.

ITEM 2.09

SECTION 202
DEFINITIONS

~~***SIGNAGE. [DSA-AC]*** *Displayed verbal, symbolic, tactile, and/or pictorial information.*~~

SIGN. [DSA-AC] *An element composed of displayed textual, symbolic, tactile, and/or pictorial information.*

ITEM 2.09.01 – RELATED CODE AMENDMENT

CHAPTER 11B
DIVISION 1: APPLICATION AND ADMINISTRATION

11B-106.5 Defined terms. ...

SIGN

~~**SIGNAGE**~~

ITEM 2.09.02 – RELATED CODE AMENDMENT
CHAPTER 11B
DIVISION 2: SCOPING REQUIREMENTS

***11B*-206.4 Entrances. ...**
11B*-206.4.1 Entrances *and exterior ground floor exits. ...
Exceptions:
1. ...
2. *Exits in excess of those required by Chapter 10, and which are more than 24 inches (610 mm) above grade shall not be required to comply with Section 11B-404. Directional ~~signage~~ signs shall comply with Chapter 10, Section 1007.10.*

***11B*-216.6 Entrances. ...**
Exceptions:
1. *An International Symbol of Accessibility is not required at entrances to individual rooms, suites, offices, sales or rental establishments, or other such spaces when all entrances to the building or facility are accessible and persons entering the building or facility have passed through one or more entrances with ~~signage~~ signs complying with this section.*
2. ...

***11B*-216.9 TTYs. ...**
***11B*-216.9.1 Identification signs. ...**

***11B*-216.9.2 Directional signs.** Directional signs indicating the location of the nearest public TTY shall be provided at all banks of public pay telephones not containing a public TTY. In addition, where signs provide direction to public pay telephones, they shall also provide direction to public TTYs. *If a facility has no banks of telephones, the directional ~~signage~~ signs shall be provided at the entrance or in a building directory.* Directional signs shall comply with *Section 11B*-703.5 and shall include the International Symbol of TTY complying with *Section 11B*-703.7.2.2.

ITEM 2.09.03 – RELATED CODE AMENDMENT
CHAPTER 11B
DIVISION 4: ACCESSIBLE ROUTES

***11B*-404.2.9 Door and gate opening force.** ...

Exceptions:

1. ...

2. ...

d. ~~Signage~~ Signs identifying the accessible entrance required by Section 11B-216.6 shall be placed on, or immediately adjacent to, each powered door. ~~Signage~~ Signs shall be provided in compliance with BHMA A156.10 or BHMA 156.19, as applicable.

11B-411.2 Elevator landing requirements. *...*

11B-411.2.1.6 Identification of floors served. *In buildings with two or more elevator banks, each serving a different group of specific floors, hall call consoles located on floors with a building entry, including parking and transfer levels, shall be provided with ~~signage~~ signs complying with Sections 11B-703.2, 11B-703.3, and 11B-703.5 on the surface of or above the hall call console stating "FLOORS n1 – n2", where n1 - n2 represents the range of floors served. Characters shall be white on a black background. When the accessibility function button is pressed, the audio output shall provide a verbal announcement of the floors served by the elevator group.*

ITEM 2.09.04 – RELATED CODE AMENDMENT
CHAPTER 11B
DIVISION 5: GENERAL SITE AND BUILDING ELEMENTS

11B-502.8 Additional ~~signage~~ signs. *An additional sign shall be posted either; 1) in a conspicuous place at each entrance to an off-street parking facility or 2) immediately adjacent to on-site accessible parking and visible from each parking space.*

ITEM 2.09.05 – RELATED CODE AMENDMENT
CHAPTER 11B
DIVISION 7: COMMUNICATION ELEMENTS AND FEATURES

Table 11B-703.8.5 Pixel Count for Low Resolution VMS ~~Signage~~

Character Height	Character Width Range	Stroke Width Range	Character Spacing Range
7	5-6	1	2
8	6-7	1-2	2-3

9	6-8	1-2	2-3
10	7-9	2	2-4
11	8-10	2	2-4
12	8-11	2	3-4
13	9-12	2-3	3-5
14	10-13	2-3	3-5
15	11-14	2-3	3-5

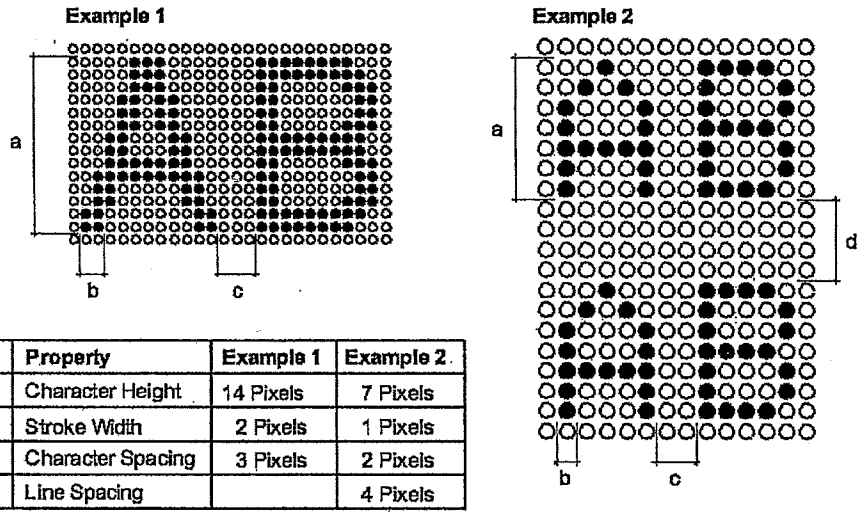

	Property	Example 1	Example 2
a	Character Height	14 Pixels	7 Pixels
b	Stroke Width	2 Pixels	1 Pixels
c	Character Spacing	3 Pixels	2 Pixels
d	Line Spacing		4 Pixels

Figure 11B-703.8.5
Low Resolution VMS ~~Signage~~ Characters

ITEM 2.09.06 – RELATED CODE AMENDMENT
CHAPTER 11B
DIVISION 8: SPECIAL ROOMS, SPACES, AND ELEMENTS

***11B*-802.4 Designated aisle seats.** ...

***11B*-802.4.2 Identification.** Each designated aisle seat shall be identified by a sign or marker *with the International Symbol of Accessibility complying with Section 11B-703.7.2.1. ~~Signage~~ Signs complying with Section 11B-703.5, notifying patrons of the availability of such seats shall be posted at the ticket office.*

ITEM 2.10

SECTION 202
DEFINITIONS

TECHNICALLY INFEASIBLE. [DSA-AC] *An alteration of a building or a facility, that has little likelihood of being accomplished because the existing structural conditions require the removal or alteration of a load-bearing member that is an essential part of the structural frame, or because other existing physical or site constraints prohibit modification or addition of elements, spaces or features that are in full and strict compliance with the minimum requirements for new construction and which are necessary to provide accessibility.*

CHAPTER 4
SPECIAL DETAILED REQUIREMENTS BASED ON USE AND OCCUPANCY

DSA-AC proposes to carry forward its adoption of specific model code provisions and California amendments in Chapter 4, from the 2013 CA Building Code into the 2016 CA Building Code, with further amendment as indicated.

ITEM 4.00

CHAPTER 4 – MATRIX ADOPTION TABLE

Adopting Agency		DSA-AC
Adopt entire Chapter		
Adopt entire Chapter as amended (amended Sections listed below)		
Adopt only those Sections that are listed below		X
Chapter / Section		
406.4.1		X
~~412.3.5~~ 412.3.8		X
419.7		

ITEM 4.01
SECTION 406 – MOTOR-VEHICLE-RELATED OCCUPANCIES

406.4 Public parking garages. ...

406.4.1 Clear height. The clear height of each floor level in vehicle and pedestrian traffic areas shall be not less than 7 feet (2134 mm). ~~Vehicle and pedestrian areas accommodating van-accessible parking shall comply with Section 1106.5.~~ ***[DSA-AC]*** *The clear height of vehicle and pedestrian areas required to be accessible shall comply with Chapter 11A or 11B, as applicable.*

ITEM 4.02
SECTION 412 – AIRCRAFT-RELATED OCCUPANCIES

412.3 Airport traffic control towers. ...

~~**412.3.5**~~ **412.3.8 Accessibility.** ~~Airport traffic control towers need not be accessible as specified in the provisions of Chapter 11.~~ ***[DSA-AC]*** *In air traffic control towers, an accessible route shall not be required to serve the cab and the equipment areas on the floor immediately below the cab.*

ITEM 4.03
SECTION 419 – LIVE/WORK UNITS

419.7 Accessibility. Accessibility shall be designed in accordance with ~~Chapter 11 for the function served~~ *Chapters 11A and/or 11B, when applicable.*

CHAPTER 9
FIRE PROTECTION SYSTEMS

DSA-AC proposes to carry forward its adoption of specific model code provisions and California amendments in Chapter 9, from the 2013 CA Building Code into the 2016 CA Building Code, with further amendment as indicated.

ITEM 9.00

CHAPTER 9 – MATRIX ADOPTION TABLE

Adopting Agency		DSA-AC
Adopt entire Chapter		
Adopt entire Chapter as amended (amended Sections listed below)		
Adopt only those Sections that are listed below		X
Chapter / Section		
907.4.2.2		X
907.5.2.3		X
907.5.2.3.1		X
~~907.5.2.3.2~~		X
~~907.5.2.3.3~~ 907.5.2.3.2		X
Table ~~907.5.2.3.3~~ 907.5.2.3.2		X
~~907.5.2.3.4~~ 907.5.2.3.3		X
~~907.5.2.3.5~~ 907.5.2.3.4		X

ITEM 9.01

SECTION 907
FIRE ALARM AND DETECTION SYSTEMS

907.4.2 Manual fire alarm boxes.

907.4.2.2 Height. The height of the manual fire alarm boxes shall be not less than 42 inches (1067 mm) and not more than 48 inches (~~1372~~ *1219* mm) measured vertically, from the floor level to the *highest point of the* activating handle or lever of the box. *Manual fire alarm boxes shall also comply with Section 11B-309.4.*

Exception: [DSA-AC] *In existing buildings there is no requirement to retroactively relocate existing manual fire alarm boxes to a minimum of 42 inches (1067 mm) and a maximum of 48 inches (1219 mm) from the floor level to the activating handle or lever of the box.*

ITEM 9.02

SECTION 907
FIRE ALARM AND DETECTION SYSTEMS

907.5.2 Alarm notification appliances.

907.5.2.3 Visible alarms. ...

907.5.2.3.1 Public use areas and common use areas. Visible alarm notification appliances shall be provided in public use areas and common use areas, *including but not limited to:*

1. *Sanitary facilities including restrooms, bathrooms and shower rooms*
2. *Corridors*
3. *Music practice rooms*
4. *Band rooms*
5. *Gymnasiums*
6. *Multipurpose rooms*
7. *Occupational shops*
8. *Occupied rooms where ambient noise impairs hearing of the fire alarm*
9. *Lobbies*
10. *Meeting rooms*
11. *Classrooms*

Exception: Where employee work areas have audible alarm coverage, the notification appliance circuits serving the employee work areas shall be initially designed with not less than 20-percent spare capacity to account for the potential of adding visible notification appliances in the future to accommodate hearing-impaired employee(s).

~~**907.5.2.3.3**~~ ***907.5.2.3.2*** **Groups ~~I-1 and~~ R-1** ***and R-2.1.*** ...

TABLE ~~907.5.2.3.3~~ *907.5.2.3.2*
VISIBLE ALARMS

NUMBER OF SLEEP UNITS	SLEEPING ACCOMMODATIONS WITH VISIBLE ALARMS
6 to 25	2
26 to 50	4
51 to 75	7
76 to 100	9
101 to 150	12
151 to 200	14
201 to 300	17
301 to 400	20
401 to 500	22
501 to 1,000	5% of total
1,001 and over	50 plus 3 for each 100 over 1,000

[DSA-AC] *Also see Chapter 11B, Section 11B-224.4 and Table 11B-224.4.*

~~**907.5.2.3.4**~~ ***907.5.2.3.3*** **Group R-2.** In Group R-2 occupancies required by Section 907 to have a fire alarm system, all dwelling units and sleeping units shall be provided with the capability to support visible alarm notification appliances in accordance with ~~Chapter 10 of ICC A117.1~~ *NFPA 72.* Such capability shall be permitted to include the potential for future interconnection of the building fire alarm system with the unit smoke alarms, replacement of audible appliances with combination audible/visible appliances, or future extension of the existing wiring from the unit smoke alarm locations to required locations for visible appliances.

~~***907.5.2.3.5***~~ ***907.5.2.3.4*** ***Groups R-2.1, R-3.1 and R-4.*** ...

CHAPTER 10
MEANS OF EGRESS

DSA-AC proposes to carry forward its adoption of specific model code provisions and California amendments in Chapter 10, from the 2013 CA Building Code into the 2016 CA Building Code, with further amendment as indicated.

ITEM 10.00

CHAPTER 10 – MATRIX ADOPTION TABLE

Adopting Agency		DSA-AC
Adopt entire Chapter		
Adopt entire Chapter as amended (amended Sections listed below)		
Adopt only those Sections that are listed below		X
Chapter / Section		
1003.1 (Not SFM exception)		X
~~1007.1~~ 1009.1		X
~~1007.2~~ 1009.2		X
~~1007.2.1~~ 1009.2.1		X
~~1007.3~~ 1009.3		X
~~1007.4~~ 1009.4		X
~~1007.5~~ 1009.5		X
~~1007.5.1~~ 1009.5.1		X
~~1007.6~~ 1009.6		X
~~1007.6~~ 1009.6.1		X
~~1007.6~~ 1009.6.2		X
~~1007.6.1~~ 1009.6.3		X
~~1007.6.2~~ 1009.6.4		X
~~1007.6.3~~ 1009.6.5		X
~~1007.7~~ 1009.7		X
~~1007.7.1~~ 1009.7		X
~~1007.7.2~~		~~X~~
~~1007.7.3~~ 1009.7.1		X
~~1007.7.4~~ 1009.7.2		X
~~1007.7.5~~ 1009.7.3		X
~~1007.7.6~~ 1009.7.4		X
~~1007.8~~ 1009.8		X
~~1007.8.1~~ 1009.8.1		X
~~1007.8.1.1~~ 1009.8.1.1		X
~~1007.8.2~~ 1009.8.2		X
~~1007.9~~ 1009.9		X
~~1007.10~~ 1009.10		X

~~1007.11~~ 1009.11		X
~~1007.12~~ 1009.12		X
~~1008~~ 1010 (1st paragraph below title only)		X
~~1008.1.9.7~~ 1010.1.9.7 ~~(Item 5.1 only)~~ (Items 4, 6.3 & 6.3.1 only)		X
~~1009~~ 1011 (1st paragraph below title only)		X
~~1009.7.2~~ 1011.5.2 ~~(Exception 6 only)~~ (Exception 4 only)		X
~~1009.15~~ 1011.11 (2nd paragraph only)		X
~~1010~~ 1012 (1st paragraph below title only)		X
~~1011.4~~ 1013.4		X
~~1012~~ 1014 (1st paragraph below title only)		X
~~1013.2~~ 1015.2		X
~~1013.3~~ 1015.3		X
~~1017~~ 1018 (1st paragraph below title only)		X
~~1017.3~~ 1018.3 (Exception only)		X
1018.3 (Exception only)		X
1018.5 (Exception only)		X
~~1022.9~~ 1023.9 (2nd paragraph only)		X

ITEM 10.01

SECTION 1003
GENERAL MEANS OF EGRESS

1003.1 Applicability. The general requirements specified in Sections 1003 through 1015 shall apply to all three elements of the means of egress system, in addition to those specific requirements for the exit access, the exit and the exit discharge detailed elsewhere in this chapter.

[DSA-AC] *In addition to the requirement of this chapter, means of egress, which provide access to, or egress from, buildings or facilities where accessibility is required for applications listed in Section 1.8.2.1.2 regulated by the Department of Housing and Community Development, or Section 1.9.1 regulated by the Division of the State Architect-Access Compliance, shall also comply with Chapter 11A or Chapter 11B, as applicable.*

1003.5 Elevation change. ...

Exceptions:

1. A single step with a maximum riser height of 7 inches (178 mm) is permitted for buildings with occupancies in Groups F, H, R-2, R-3, S and U at exterior doors not required to be *accessible* by Chapter ~~11~~ *11A or 11B*.

2. A *stair* with a single riser or with two risers and a tread is permitted at locations not required to be *accessible* by Chapter ~~11~~ *11A or 11B*, provided that the risers and treads comply with

Section 1011.5, the minimum depth of the tread is 13 inches (330 mm) and not less than one *handrail* complying with Section 1014 is provided within 30 inches (762 mm) of the centerline of the normal path of egress travel on the *stair*.

3. A step is permitted in *aisles* serving seating that has a difference in elevation less than 12 inches (305 mm) at locations not required to be *accessible* by Chapter ~~11~~ *11A or 11B*, provided that the risers and treads comply with Section 1029.13 and the *aisle* is provided with a *handrail* complying with Section 1029.15.

ITEM 10.02

SECTION ~~1007~~ 1009
ACCESSIBLE MEANS OF EGRESS

~~1007.1~~ 1009.1 **Accessible means of egress required.** Accessible means of egress shall comply with this section. Accessible spaces shall be provided with not less than one accessible means of egress. Where more than one means of egress are required by Section 1006.2 or 1006.3 from any accessible space, each accessible portion of the space shall be served by ~~not less than two~~ accessible means of egress *in at least the same number as required by Section ~~1015.1 or 1021.1~~ 1006.2 or 1006.3. In addition to the requirements of this chapter, means of egress, which provide access to, or egress from, buildings for persons with disabilities, shall also comply with the requirements of Chapter 11A or 11B as applicable.*

Exceptions:

1. Accessible means of egress are not required in alterations to existing buildings.

2. One accessible means of egress is required from an accessible mezzanine level in accordance with Section 1009.3, 1009.4 or 1009.5 *and Chapter 11A or 11B, as applicable.*

3. In assembly areas with sloped or stepped aisles, one accessible means of egress is permitted where the common path of travel is accessible and meets the requirements in Section 1029.8, *and Chapter 11A or 11B, as applicable.*

~~1007.2~~ 1009.2 **Continuity and components.** Each required accessible means of egress shall be continuous to a public way and shall consist of one or more of the following components:

1. Accessible routes complying with ~~Section 1104~~ *Chapter 11A, Section 1110A.1 and 1120A, or Chapter 11B, Sections 11B-206 and 11B-402, as applicable.*

2. Interior exit stairways complying with Sections 1009.3 and 1023, *Chapter 11A, Section 1123A, or Chapter 11B, Sections 11B-210 and 11B-504, as applicable.*

3. Exit access stairways complying with Sections 1009.3 and 1019.3 or 1019.4, *Chapter 11A, Section 1123A, or Chapter 11B, Sections 11B-210 and 11B-504, as applicable.*

4. Exterior exit stairways complying with Sections 1009.3, ~~and~~ 1027, *and Chapter 11A, Section 1115A, or Chapter 11B, Sections 11B-210 and 11B-504, as applicable.* ~~and serving levels other than the level of exit discharge.~~

5. Elevators complying with Section 1009.4, *and Chapter 11A, Section 1124A, or Chapter 11B, Sections 11B-206.6 and 11B-407, as applicable.*

6. Platform lifts complying with Section 1009.5 *and Chapter 11A, Section 1124A, or Chapter 11B, Sections 11B-206.7, 11B-207.2 and 11B-410 as applicable.*

7. Horizontal exits complying with Section 1026.

8. Ramps complying with Section 1012, *and Chapter 11A, Sections 1114A and 1122A, or Chapter 11B, Section 11B-405, as applicable.*

9. Areas of refuge complying with Section 1009.6.

10. Exterior areas for assisted rescue complying with Section 1009.7 serving exits at the level of exit discharge.

~~1007.2.1~~ **1009.2.1 Elevators required.** ...

~~1007.3~~ **1009.3 Stairways.** In order to be considered part of an accessible means of egress, a stairway between stories shall have a clear width of 48 inches (1219 mm) minimum between handrails and shall either incorporate an area of refuge within an enlarged floor-level landing or shall be accessed from an area of refuge complying with Section 1009.6. Exit access stairways that connect levels in the same story are not permitted as part an accessible means of egress. ***[DSA-AC]*** *In addition, exit stairways shall comply with Chapter 11A, Section 1115A and 1123A, or Chapter 11B, Sections 11B-210 and 11B-504, as applicable.*

Exceptions:

1. Exit access stairways providing means of egress from mezzanines are permitted as part of an accessible means of egress.
2. The clear width of 48 inches (1219 mm) between handrails is not required in buildings equipped throughout with an automatic sprinkler system installed in accordance with Section 903.3.1.1 or 903.3.1.2.
3. The clear width of 48 inches (1219 mm) between handrails is not required for stairways accessed from a refuge area in conjunction with a horizontal exit.
4. Areas of refuge are not required at exit access stairways where two-way communication is provided at the elevator landing in accordance with Section 1009.8.
5. Areas of refuge are not required at stairways in buildings equipped throughout with an automatic sprinkler system installed in accordance with Section 903.3.1.1 or 903.3.1.2.
6. Areas of refuge are not required at stairways serving open parking garages.
7. Areas of refuge are not required for smoke-protected assembly seating areas complying with Section 1029.6.2.
8. Areas of refuge are not required at stairways in Group R-2 occupancies.
9. Areas of refuge are not required for stairways accessed from a refuge area in conjunction with a horizontal exit.

~~1009.4~~ **1009.4 Elevators.** ...

~~1007.5~~ **1009.5 Platform lifts.** Platform lifts shall be permitted to serve as part of an accessible means of egress where allowed as part of a required accessible route in ~~Section 1109.8 except for Item 10~~ *Chapter 11A, Section 1121A, or Chapter 11B, Sections 11B-206.7.1 through 11B-206.7.10, as applicable.* Standby power for the platform lift shall be provided in accordance with Chapter 27. ***[DSA-AC]*** *See Chapter 11B, Section 11B-207.2 for additional accessible means of egress requirements at platform lifts.*

~~1007.6~~ **1009.6 Areas of refuge.** Every required area of refuge shall be accessible from the space it serves by an accessible means of egress. ***[DSA-AC]*** *Areas of refuge shall comply with the requirements of this code and shall adjoin an accessible route complying with Sections 11B-206 and 11B-402.*

~~1007.6~~ **1009.6.1 Travel distance.** ...

~~1007.6~~ **1009.6.2 Stairway or elevator access.** ...

~~1007.6.1~~ **1009.6.3 Size.** Each area of refuge shall be sized to accommodate ~~one~~ *two* wheelchair ~~space~~ *spaces that are not less than* ~~of~~ 30 inches by 48 inches (762 mm by 1219 mm). *The total number of such 30-inch by 48-inch (762 mm) by 1219 mm) spaces per story shall be not less than one for every 200 persons of calculated occupant load served by the area of refuge.* ~~for each 200 occupants or portion thereof, based on the occupant load of the area of refuge and areas served by the area of refuge.~~ Such wheelchair spaces shall not reduce the means of egress minimum width or required capacity. Access to any of the required wheelchair spaces in an area of refuge shall not be obstructed by more than one adjoining wheelchair space.

Exception: *The enforcing agency may reduce the size of each required area of refuge to accommodate one wheelchair space that is not less than 30 inches by 48 inches (762 mm by 1219 mm) on floors where the occupant load is less than 200.*

~~1007.6.2~~ **1009.6.4 Separation.** ...

~~1007.6.3~~ **1009.6.5 Two-way communication.** ...

~~1007.7~~ **1009.7 Exterior areas for assisted rescue.** ...

~~1007.8~~ **1009.8 Two-way communication.** ...

~~1007.8.1~~ **1009.8.1 System requirements.** ...

~~*1007.8.1.1*~~ ***1009.8.1.1 Visible communication method. [DSA-AC]*** *A button complying with Sections 11B-205 and 11B-309 in the area of refuge shall activate both a light in the area of refuge indicating that rescue has been requested and a light at the central control point indicating that rescue is being requested. A button at the central control point shall activate both a light at the central control point and a light in the area of refuge indicating that the request has been received.*

~~1007.8.2~~ **1009.8.2 Directions.** Directions for the use of the two-way communication system, instructions for summoning assistance via the two-way communication system and written identification of the location shall be posted adjacent to the two-way communication system. Signage shall comply with ~~the ICC A117.1~~ *Section 11B-703.5* requirements for visual characters.

~~1007.9~~ **1009.9 Signage.** Signage indicating special accessibility provisions shall be provided as shown:

1. Each door providing access to an area of refuge from an adjacent floor area shall be identified by a sign stating: AREA OF REFUGE.

2. Each door providing access to an exterior area for assisted rescue shall be identified by a sign stating: EXTERIOR AREA FOR ASSISTED RESCUE.

Signage shall comply with ~~the ICC A117.1~~ *Section 11B-703.5* requirements for visual characters and include the International Symbol of Accessibility *complying with Section 11B-703.7.2.1.* Where exit sign illumination is required by Section 1013.3, the signs shall be illuminated. Additionally, visual characters, raised character and braille signage complying with ~~ICC A117.1~~ *Sections 11B-703.1, 11B-703.2, 11B-703.3 and 11B-703.5 and the International Symbol of Accessibility complying with Section 11B-703.7.2.1* shall be located at each door to an area of refuge and exterior area for assisted rescue in accordance with Section 1011.4.

~~1007.10~~ **1009.10 Directional signage.** Directional signage *complying with Section 11B-703.5* indicating the location of all other means of egress and which of those are accessible means of egress shall be provided at the following:

1. At exits serving a required accessible space but not providing an approved accessible means of egress.
2. At elevator landings.
3. Within areas of refuge.

~~1007.11~~ **1009.11 Instructions.** In areas of refuge and exterior areas for assisted rescue, instructions on the use of the area under emergency conditions shall be posted. Signage shall comply with ~~the ICC A117.1~~ *Section 11B-703.5* requirements for visual characters. The instructions shall include all of the following:

1. Persons able to use the exit stairway do so as soon as possible, unless they are assisting others.
2. Information on planned availability of assistance in the use of stairs or supervised operation of elevators and how to summon such assistance.
3. Directions for use of the two-way communications system where provided.

~~1007.12~~ 1009.12 Alarms/emergency warning systems/accessibility. ...

ITEM 10.03

SECTION ~~1008~~ 1010
DOORS, GATES AND TURNSTILES

[DSA-AC] In addition to the requirements of this section, means of egress, which provide access to, or egress from, buildings or facilities where accessibility is required for applications listed in Section 1.9.1 regulated by the Division of the State Architect-Access Compliance, shall also comply with Chapter 11A or Chapter 11B, Sections 11B-206.5 and 11B-404, as applicable.

~~1008.1.4~~ **1010.1.4 Special doors.** ...

~~1008.1.4.1~~ **1010.1.4.1 Revolving doors.** Revolving doors shall comply with the following:

1. ...
2. ...
3. ...
4. ...
5. ...
6. ...
7. Revolving doors shall not be part of an accessible route required by Section 1009 and Chapter ~~11~~ *11A or 11B.*

~~1008.1.7~~ **1010.1.7 Thresholds.** ...

Exceptions:

1. In occupancy Group R-2 or R-3, threshold heights for sliding and side-hinged exterior doors shall be permitted to be up to 7 $^{3}/_{4}$ inches (197 mm) in height if all of the following apply:
   1.1. ...
   1.2. The door is not part of an accessible route as required by Chapter ~~11~~ *11A or 11B.*
   1.3. ...
2. ...

~~1008.1.9~~ **1010.1.9 Door operations.** ...

~~1008.1.9.1~~ 1010.1.9.1 **Hardware.** Door handles, pulls, latches, locks and other operating devices on doors required to be accessible by Chapter ~~11~~ *11A or 11B* shall not require tight grasping, tight pinching or twisting of the wrist to operate.

~~1008.1.9.7~~ 1010.1.9.7 **Delayed egress locks.** ...

1. ...
2. ...
3. ...
4. An attempt to egress shall initiate an irreversible process that shall allow such egress in not more than 15 seconds when a physical effort to exit is applied to the egress side door hardware for not more than 3 seconds. Initiation of the irreversible process shall activate an audible signal in the vicinity of the door. Once the delay electronics have been deactivated, rearming the delay electronics shall be by manual means only. *The time delay established for each egress-control device shall not be field adjustable. For applications listed in Section 1.9.1 regulated by the Division of the State Architect-Access Compliance, see Chapter 11B, Section 11B-404.2.9.*

   Exception: Where approved, a delay of not more than 30 seconds is permitted on a delayed egress door.
5. ...
6. A sign shall be provided on the door and shall be located above and within 12 inches (305 mm) of the door exit hardware:

   6.1. For doors that swing in the direction of egress, the sign shall read: ~~PUSH UNTIL ALARM SOUNDS. DOOR CAN BE OPENED IN 15 [30] SECONDS.~~ *"KEEP PUSHING. THIS DOOR WILL OPEN IN 15 [30] SECONDS. ALARM WILL SOUND."*

   6.2. For doors that swing in the opposite direction of egress, the sign shall read: ~~PULL UNTIL ALARM SOUNDS. DOOR CAN BE OPENED IN 15 [30] SECONDS.~~ *"KEEP PULLING. THIS DOOR WILL OPEN IN 15 [30] SECONDS. ALARM WILL SOUND."*

   6.3. The sign shall comply with the visual character requirements in ~~ICC A117.1~~ *Section 11B-703.5. Sign lettering shall be at least 1 inch (25 mm) in height and shall have a stroke of not less than 1/8 inch (3.2 mm).*

   ~~5.1~~ *6.3.1 A tactile sign shall also be provided in Braille and raised characters, which complies with Sections 11B-703.1, 11B-703.2, 11B-703.3 and 11B-703.5.*
7. ...
8. ...

ITEM 10.04

SECTION ~~1009~~ 1011
STAIRWAYS

[DSA-AC] *In addition to the requirements of this section, means of egress, which provide access to, or*

egress from, buildings or facilities where accessibility is required for applications listed in Section 1.9.1 regulated by the Division of the State Architect-Access Compliance, shall also comply with Chapter 11A or Chapter 11B, Sections 11B-210 and 11B-504, as applicable.

~~1009.7.2~~ 1011.5.2 **Riser height and tread depth.** ...

Exceptions:

1. ...
2. ...
3. ...
4. See Section 403.1 of the ~~International~~ *California* Existing Building Code for the replacement of existing stairways. ***[DSA-AC]*** *For applications listed in Section 1.9.1 regulated by the Division of the State Architect-Access Compliance, see Chapter 11B, Section 11B-202.*
5. ...

~~1009.15~~ 1011.11 **Handrails.** ...

[DSA-AC] *For applications listed in Section 1.9.1 regulated by the Division of the State Architect-Access Compliance, see Chapter 11B, Sections 11B-504.6 and 11B-505.*

ITEM 10.05

SECTION ~~1010~~ 1012
RAMPS

[DSA-AC] *In addition to the requirements of this section, means of egress, which provide access to, or egress from, buildings or facilities where accessibility is required for applications listed in Section 1.9.1 regulated by the Division of the State Architect-Access Compliance, shall also comply with Chapter 11A or Chapter 11B, Section 11B-405, as applicable.*

~~1010.1~~ 1012.1 **Scope.** ...

Exceptions:

1. ...
2. Curb ramps shall comply with ~~ICC A117.1~~ *Chapter 11A or 11B, Section 11B-406, as applicable.*
3. ...

1012.6.5 Doorways. Where doorways are located adjacent to a ramp landing, maneuvering clearances required ~~by ICC A117.1~~ *for accessibility* are permitted to overlap the required landing area *as specified in Chapter 11A or 11B, as applicable*.

1012.10 Edge protection. ...

Exceptions:

1. Edge protection is not required on ramps that are not required to have *handrails*, provided they have flared sides that comply with ~~the ICC A117.1~~ *Chapter 11A or 11B* curb ramp provisions.
2. ...
3. ...

ITEM 10.06

SECTION ~~1011~~ 1013
EXIT SIGNS

~~1011.4~~ 1013.4 Raised character and Braille exit signs. ~~A sign stating EXIT in visual characters, raised characters and braille and complying with *ICC A117.1* shall be provided adjacent to each door to an *area of refuge*, an exterior area for assisted rescue, an *exit stairway* or *ramp*, an *exit passageway* and the *exit discharge*.~~ *Tactile exit signs shall be required at the following locations:*

1. *Each grade-level exterior exit door that is required to comply with Section ~~1011.1~~ 1013.1, shall be identified by a tactile exit sign with the word, ~~"EXIT."~~ "EXIT".*

2. *Each exit door that is required to comply with Section ~~1011.1~~ 1013.1, and that leads directly to a grade-level exterior exit by means of a stairway or ramp shall be identified by a tactile exit sign with the following words as appropriate:*

   2.1. "EXIT STAIR DOWN"
   2.2. "EXIT RAMP DOWN"
   2.3. "EXIT STAIR UP"
   2.4. "EXIT RAMP UP"

3. *Each exit door that is required to comply with Section ~~1011.1~~ 1013.1, and that leads directly to a grade-level exterior exit by means of an exit enclosure or an exit passageway shall be identified by a tactile exit sign with the words, ~~"EXIT ROUTE."~~ "EXIT ROUTE".*

4. *Each exit access door from an interior room or area to a corridor or hallway that is required to comply with Section ~~1011.1~~ 1013.1, shall be identified by a tactile exit sign with the words ~~"EXIT ROUTE."~~ "EXIT ROUTE".*

5. *Each exit door through a horizontal exit that is required to comply with Section ~~1011.1~~ 1013.1, shall be identified by a sign with the words, ~~"TO EXIT."~~ "TO EXIT".*

Raised character and Braille exit signs shall comply with Chapter 11A, Section 1143A or Chapter 11B, Sections 11B-703.1, 11B-703.2, 11B-703.3 and 11B-703.5.

ITEM 10.07

SECTION ~~1012~~ 1014
HANDRAILS

[DSA-AC] *In addition to the requirements of this section, means of egress, which provide access to, or egress from, buildings or facilities where accessibility is required for applications listed in Section 1.9.1 regulated by the Division of the State Architect-Access Compliance, shall also comply with Chapter 11A or Chapter 11B, Section 11B-505, as applicable.*

ITEM 10.08

SECTION ~~1013~~ 1015
GUARDS

~~1013.2~~ 1015.2 Where required. ...

~~1013.3~~ **1015.3 Height.** Required guards shall not be less than 42 inches (1067 mm) high, measured vertically as follows:

1. From the adjacent walking surfaces.
2. On stairways and stepped aisles, from the line connecting the leading edges of the tread nosings.
3. On ramps and ramped aisles, from the ramp surface at the guard.

Exceptions:

~~1. For occupancies in Group R-3 not more than three stories above grade in height and within individual dwelling units in occupancies in Group R-2 not more than three stories above grade in height with separate means of egress, required guards shall not be less than 36 inches (914 mm) in height measured vertically above the adjacent walking surfaces or adjacent fixed seating.~~

~~2.~~ 1. For occupancies in Group R-3, and within individual dwelling units in occupancies in Group R-2, guards on the open sides of stairs shall have a height not less than 34 inches (864 mm) measured vertically from a line connecting the leading edges of the treads.

~~3.~~ 2. For occupancies in Group R-3, and within individual dwelling units in occupancies in Group R-2, where the top of the guard also serves as a handrail on the open sides of stairs, the top of the guard shall not be less than 34 inches (864 mm) and not more than 38 inches (965 mm) measured vertically from a line connecting the leading edges of the treads.

~~4.~~ 3. The guard height in assembly seating areas shall comply with Section 1029.16 as applicable.

~~5.~~ 4. Along alternating tread devices and ship ladders, guards whose top rail also serves as a handrail, shall have height not less than 30 inches (762 mm) and not more than 34 inches (864 mm), measured vertically from the leading edge of the device tread nosing.

ITEM 10.09

SECTION ~~1017~~ 1018
AISLES

[DSA-AC] *In addition to the requirements of this section, means of egress, which provide access to, or egress from, buildings or facilities where accessibility is required for applications listed in Section 1.9.1 regulated by the Division of the State Architect-Access Compliance, shall also comply with Chapter 11A or Chapter 11B, Section 11B-403, as applicable.*

~~1017.3~~ **1018.3 Aisles in Groups B and M.** In Group B and M occupancies, the minimum clear aisle width shall be determined by Section 1005.1 for the occupant load served, but shall be not less than that required for corridors by Section 1020.2.

Exception: Nonpublic aisles serving less than 50 people and not required to be accessible by ~~Chapter 11~~ *Chapter 11B (see Section 11B-403)* need not exceed 28 inches (711 mm) in width.

1018.5 Aisles in other than assembly spaces and Groups B and M. In other than rooms or spaces used for assembly purposes and Group B and M occupancies, the minimum clear *aisle* capacity shall be determined by Section 1005.1 for the occupant load served, but the width shall be not less than that required for corridors by Section 1020.2.

Exception: Nonpublic aisles serving less than 50 people and not required to be accessible by ~~Chapter 11~~ *Chapter 11B (see Section 11B-403)* need not exceed 28 inches (711 mm) in width.

ITEM 10.10

SECTION ~~1022~~ 1023
INTERIOR EXIT STAIRWAYS AND RAMPS

~~1022.9~~ **1023.9 Stairway identification signs.** A sign shall be provided at each floor landing in an interior exit stairway and ramp connecting more than three stories designating the floor level, the terminus of the top and bottom of the interior exit stairway and ramp and the identification of the stairway or ramp. The signage shall also state the story of, and the direction to, the exit discharge and the availability of roof access from the interior exit stairway and ramp for the fire department. The sign shall be located 5 feet (1524 mm) above the floor landing in a position that is readily visible when the doors are in the open and closed positions. ~~In addition to the stairway identification sign, a floor level sign in visual characters, raised characters and braille complying with ICC A117.1 shall be located at each floor level landing adjacent to the door leading from the interior exit stairway and ramp into the corridor to identify the floor level.~~

In addition to the stairway identification sign, raised characters and Braille floor identification signs that comply with Sections 11B-703.1, 11B-703.2, 11B-703.3 and 11B-703.5 shall be located at the landing of each floor level, placed adjacent to the door on the latch side, in all enclosed stairways in buildings two or more stories in height to identify the floor level. At the exit discharge level, the sign shall include a raised five pointed star located to the left of the identifying floor level. The outside diameter of the star shall be the same as the height of the raised characters.

CHAPTER 11A
HOUSING ACCESSIBILITY

DSA-AC proposes to carry forward its adoption of existing California amendments in Chapter 11A, from the 2013 CA Building Code into the 2016 CA Building Code.

ITEM 11A.00

CHAPTER 11A – MATRIX ADOPTION TABLE

Adopting Agency		DSA-AC
Adopt entire Chapter		
Adopt entire Chapter as amended (amended Sections listed below)		
Adopt only those Sections that are listed below		X
Chapter / Section		
1128A		X
1129A		X
1130A		X
1131A		X
1132A		X
1133A		X
1134A		X
1135A		X
1136A		X
1150A.1		X

CHAPTER 11B
ACCESSIBILITY TO PUBLIC BUILDINGS, PUBLIC ACCOMMODATIONS, COMMERCIAL BUILDINGS AND PUBLICLY FUNDED HOUSING

DSA-AC proposes to carry forward its adoption of existing California amendments in Chapter 11B, from the 2013 CA Building Code into the 2016 CA Building Code, with further amendment as indicated.

ITEM 11B.00

CHAPTER 11B – MATRIX ADOPTION TABLE

Adopting Agency		DSA-AC
Adopt entire California Chapter		X
Adopt entire California Chapter as amended (amended Sections listed below)		
Adopt only those Sections that are listed below		
Chapter / Section	Codes	

ITEM 11B.01

DIVISION 2: SCOPING REQUIREMENTS

***11B*-202 Existing buildings and facilities**

11B*-202.4 *Path of travel requirements in* alterations, *additions and structural repairs. *When alterations or additions are made to existing buildings or facilities, an accessible path of travel to the specific area of alteration or addition shall be provided. The primary accessible path of travel shall include:*

1. *A primary entrance to the building or facility,*
2. *Toilet and bathing facilities serving the area,*
3. *Drinking fountains serving the area,*
4. *Public telephones serving the area, and*
5. *Signs.*

Exceptions:

1. *...*

2. *If the following elements of a path of travel have been constructed or altered in compliance with the accessibility requirements of the immediately ~~preceeding~~ preceding edition of the California Building Code, it shall not be required to retrofit such elements to reflect the incremental changes in this code solely because of an alteration to an area served by those elements of the path of travel:*

    1. *A primary entrance to the building or facility,*
    2. *Toilet and bathing facilities serving the area,*
    3. *Drinking fountains serving the area,*
    4. *Public telephones serving the area, and*
    5. *Signs.*

3. ...

4. *Alterations solely for the purpose of barrier removal undertaken pursuant to the requirements of the Americans with Disabilities Act (Public Law 101-336, 28 C.F.R., Section 36.304) or the accessibility requirements of this code as those requirements or regulations now exist or are hereafter amended ~~consisting of~~ including, but not limited to, one or more of the following items shall be limited to the actual scope of work of the project and shall not be required to comply with Section 11B-202.4:*

    1. *Installing ramps.*
    2. *Making curb cuts in sidewalks and entrance.*
    3. *Repositioning shelves.*
    4. *Rearranging tables, chairs, vending machines, display racks, and other furniture.*
    5. *Repositioning telephones.*
    6. *Adding raised markings on elevator control buttons.*
    7. *Installing flashing alarm lights.*
    8. *Widening doors.*
    9. *Installing offset hinges to widen doorways.*
    10. *Eliminating a turnstile or providing an alternative accessible route.*
    11. *Installing accessible door hardware.*
    12. *Installing grab bars in toilet stalls.*
    13. *Rearranging toilet partitions to increase maneuvering space.*
    14. *Insulating lavatory pipes under sinks to prevent burns.*
    15. *Installing a raised toilet seat.*
    16. *Installing a full-length bathroom mirror.*
    17. *Repositioning the paper towel dispenser in a bathroom.*
    18. *Creating designated accessible parking spaces.*
    19. *Removing high-pile, low-density carpeting.*

5. ...

6. ...

7. ...

8. *When the adjusted construction cost, as defined, is less than or equal to the current valuation threshold, as defined ~~in Chapter 2, Section 202~~, the cost of compliance with Section 11B-202.4 shall be limited to 20 percent of the adjusted construction cost of alterations, structural repairs or additions. When the cost of full compliance with Section 11B-202.4 would exceed 20 percent, compliance shall be provided to the greatest extent possible without exceeding 20 percent.*

    When the adjusted construction cost, as defined, exceeds the current valuation threshold, as defined ~~in Chapter 2, Section 202~~, and the enforcing agency determines the cost of compliance with Section 11B-202.4 is an unreasonable hardship, as defined ~~in Chapter 2, Section 202~~, full compliance with Section 11B-202.4 shall not be required. Compliance shall be provided by equivalent facilitation or to the greatest extent possible without creating an unreasonable hardship; but in no case shall the cost of compliance be less than 20 percent of the adjusted construction cost of alterations, structural repairs or additions. The details of the finding of unreasonable hardship shall be recorded and entered into the files of the enforcing agency and shall be subject to Chapter 1, Section 1.9.1.5, Special Conditions for Persons with Disabilities Requiring Appeals Action Ratification.

For the purposes of this exception, the adjusted construction cost of alterations, structural repairs or additions shall not include the cost of alterations to path of travel elements required to comply with Section 11B-202.4.

In choosing which accessible elements to provide, priority should be given to those elements that will provide the greatest access in the following order:

1. *An accessible entrance;*
2. *An accessible route to the altered area;*
3. *At least one accessible restroom for each sex or ~~a single~~ one accessible unisex (single-user or family) restroom;*
4. *Accessible telephones;*
5. *Accessible drinking fountains; and*
6. *When possible, additional accessible elements such as parking, signs, storage and alarms.*

If an area has been altered without providing an accessible path of travel to that area, and subsequent alterations of that area or a different area on the same path of travel are undertaken within three years of the original alteration, the total cost of alterations to the areas on that path of travel during the preceding three-year period shall be considered in determining whether the cost of making that path of travel accessible is disproportionate.

9. *Certain types of privately funded, multistory buildings and facilities were formerly exempt from accessibility requirements above and below the first floor under this code, but as of, April 1, 1994, are no longer exempt due to more restrictive provisions in the federal Americans with Disabilities Act. In alteration projects involving buildings and facilities previously approved and built without elevators, areas above and below the ground floor are subject to the 20-percent ~~disproportionately~~ disproportionality provisions described in Exception 8, above, even if the value of the project exceeds the valuation threshold in Exception 8. The types of buildings and facilities are:*

   1. *Office buildings and passenger vehicle service stations of three stories or more and 3,000 or more square feet (279 m^2) per floor.*
   2. *Offices of physicians and surgeons.*
   3. *Shopping centers.*
   4. *Other buildings and facilities three stories or more and 3,000 or more square feet (279 m^2) per floor if a reasonable portion of services sought and used by the public is available on the accessible level.*

   For the general privately funded multistory building exception applicable to new construction and alterations, see Section 11B-206.2.3, Exception 1.

   The elevator exception set forth in this section does not obviate or limit in any way the obligation to comply with the other accessibility requirements in this code. For example, floors above or below the accessible ground floor must meet the requirements of this section except for elevator service. If toilet or bathing facilities are provided on a level not served by an elevator, then toilet or bathing facilities must be provided on the accessible ground floor.

ITEM 11B.02

DIVISION 2: SCOPING REQUIREMENTS

***11B*-202 Existing buildings and facilities**

11B*-202.4 *Path of travel requirements in* alterations, *additions and structural repairs. *When alterations or additions are made to existing buildings or facilities, an accessible path of travel to the specific area of alteration or addition shall be provided. The primary accessible path of travel shall include:*

1. *A primary entrance to the building or facility,*
2. *Toilet and bathing facilities serving the area,*
3. *Drinking fountains serving the area,*
4. *Public telephones serving the area, and*
5. *Signs.*

Exceptions: ...

10. The cost of compliance with Section 11B-202.4 for seismic mitigation projects shall be limited to 20 percent of the adjusted construction cost.

For the purposes of this exception the adjusted construction cost of a seismic mitigation project shall not include the cost of alterations to path of travel elements required to comply with Section 11B-202.4.

When the path of travel elements for a seismic mitigation project cannot be fully upgraded to comply with Section 11B-202.4 within the 20 percent cost limitation, the priority list of Exception 8 shall be applied.

ITEM 11B.02.01 – RELATED CODE AMENDMENT

CHAPTER 2 – DEFINITIONS
SECTION 202 – Definitions

SEISMIC MITIGATION. [DSA-AC] *The strengthening of structural elements of an existing building or facility to increase its capacity to resist earthquake induced seismic loads. The scope of seismic mitigation projects shall be permitted to include the disturbance and replacement of non-structural elements and systems as necessary to complete the seismic mitigation work.*

ITEM 11B.02.02 – RELATED CODE AMENDMENT

CHAPTER 11B
DIVISION 1: APPLICATION AND ADMINISTRATION

11B-106.5 Defined terms. ...

SEISMIC MITIGATION

ITEM 11B.03

DIVISION 2: SCOPING REQUIREMENTS

***11B*-208 Parking spaces**
***11B*-208.2 Minimum Number.** ...

***11B*-208.2.3 Residential facilities.** Parking spaces provided to serve residential facilities shall comply with *Section 11B*-208.2.3.

***11B*-208.2.3.1 Parking for residents.** Where at least one parking space is provided for each residential dwelling unit, at least one parking space complying with *Section 11B*-502 shall be provided for each residential dwelling unit required to provide mobility features complying with *Sections 11B*-809.2 through *11B*-809.4. *Where fewer than one parking space is provided for each residential dwelling unit, parking spaces complying with Section 11B-502 shall be provided in accordance with Table 11B-208.2.*

ITEM 11B.04

WITHDRAWN

ITEM 11B.04.01 – RELATED CODE AMENDMENT

WITHDRAWN

ITEM 11B.05

DIVISION 2: SCOPING REQUIREMENTS

***11B*-209 Passenger *drop-off and* loading zones and bus stops**

***11B*-209.1 General.** Passenger *drop-off and* loading zones shall be provided in accordance with *Section 11B*-209.

***11B*-209.2 Type.** Where provided, passenger *drop-off and* loading zones shall comply with *Section 11B*-209.2.

***11B*-209.2.1 Passenger *drop-off and* loading zones.** Passenger *drop-off and* loading zones, except those required to comply with *Sections 11B*-209.2.2 and *11B*-209.2.3, shall provide at least one passenger *drop-off and* loading zone complying with *Section 11B*-503 in every continuous 100 linear feet (*30480 mm*) of *drop-off and* loading zone space, or fraction thereof.

***11B*-209.2.2 Bus loading zones.** ...

***11B*-209.2.3 On-street bus stops.** ...

***11B*-209.3 Medical care and long-term care facilities.** At least one passenger *drop-off and* loading zone complying with *Section 11B*-503 shall be provided at an accessible entrance to licensed medical care and licensed long-term care facilities where the period of stay *may exceed* twenty-four hours.

***11B*-209.4 Valet parking.** Parking facilities that provide valet parking services shall provide at least one passenger *drop-off and* loading zone complying with *Section 11B*-503. *The parking requirements of Section 11B-208.1 apply to facilities with valet parking.*

***11B*-209.5 Mechanical access parking garages.** Mechanical access parking garages shall provide at least one passenger *drop-off and* loading zone complying with *Section 11B*-503 at vehicle drop-off and vehicle pick-up areas.

ITEM 11B.06

DIVISION 2: SCOPING REQUIREMENTS

***11B*-213 Toilet facilities and bathing facilities**

...

***11B*-213.2 Toilet rooms and bathing rooms.** Where toilet rooms are provided, each toilet room shall comply with *Section 11B*-603. Where bathing rooms are provided, each bathing room shall comply with *Section 11B*-603.

Exceptions:

1. In alterations where it is technically infeasible to comply with *Section 11B*-603, altering existing toilet or bathing rooms shall not be required where a single unisex *(single-user or family)* toilet room or bathing room complying with *Section 11B*-213.2.1 is provided and located in the same area and on the same floor as existing inaccessible toilet or bathing rooms.
2. ...
3. ...
4. ...
5. ...

***11B*-213.2.1 Unisex (~~single-use~~ *single-user* or family) toilet and unisex *(single-user or family)* bathing rooms.** Unisex *(single-user or family)* toilet rooms shall contain not more than one lavatory, and *not more than* two water closets without urinals or one water closet and one urinal. Unisex *(single-user or family)* bathing rooms shall contain one shower or one shower and one bathtub, one lavatory, and one water closet. Doors to unisex *(single-user or family)* toilet rooms and unisex *(single-user or family)* bathing rooms shall have privacy latches.

11B-213.2.2 ...

11B-213.2.3 ...

ITEM 11B.06.01 – RELATED CODE AMENDMENT

WITHDRAWN

ITEM 11B.06.02 – RELATED CODE AMENDMENT

WITHDRAWN

ITEM 11B.06.03 – RELATED CODE AMENDMENT

WITHDRAWN

ITEM 11B.07

DIVISION 2: SCOPING REQUIREMENTS

***11B*-213 Toilet facilities and bathing facilities**

***11B*-213.3 Plumbing fixtures and accessories.** Plumbing fixtures and accessories provided in a toilet room or bathing room required to comply with *Section 11B*-213.2 shall comply with *Section 11B*-213.3.

***11B*-213.3.1 Toilet compartments.** Where toilet compartments are provided, at least *five percent of the toilet compartments, or five percent of the combination of toilet compartments and urinals, but no fewer than* one toilet compartment shall comply with *Section 11B*-604.8.1. In addition to the *compartments* required to comply with *Section 11B*-604.8.1, where six or more toilet compartments are provided, or where the combination of urinals and water closets totals six or more fixtures, *toilet compartments complying with Section 11B-604.8.2 shall be provided in the same quantity as the toilet compartments required to comply with Section 11B-604.8.1.*

ITEM 11B.08

DIVISION 2: SCOPING REQUIREMENTS

***11B*-216 Signs**

***11B*-216.5 Parking.** *Signs identifying parking spaces and signs within parking facilities shall comply with Section 11B-216.5.*

11B-216.5.1 Parking spaces. Parking spaces complying with *Section 11B*-502 shall be identified by signs complying with ~~*Section*~~ *Sections 11B*-502.6 *and 11B-502.8*.

Exceptions:

1. ***Reserved.***
2. In residential facilities, where parking spaces are assigned to specific residential dwelling units, identification of accessible parking spaces shall not be required.

11B-216.5.2 Parking facilities. *Signs intended for use by pedestrians within parking facilities, including directional or informational signs indicating parking sections or levels, shall comply with the requirements of Section 11B-216.*

ITEM 11B.09

DIVISION 2: SCOPING REQUIREMENTS

***11B*-216 Signs**

***11B*-216.5 Parking.** *Signs identifying parking spaces and signs within parking facilities shall comply with Section 11B-216.5.*

11B-216.5.1 Parking spaces. Parking spaces complying with *Section 11B*-502 shall be identified by signs complying with *Section 11B*-502.6.

Exceptions:

1. ***Reserved.***
2. In residential facilities, where parking spaces are assigned to specific residential dwelling units, identification of accessible parking spaces shall not be required.

11B-216.5.2 Parking facilities. *Signs within parking facilities shall comply with Section 11B-216.5.2.*

11B-216.5.2.1 Signs intended for use by pedestrians. *Signs intended for use by pedestrians within parking facilities, including directional or informational signs indicating parking sections or levels, shall comply with the requirements of Section 11B-216.*

11B-216.5.2.2 Additional signs. *Signs within parking facilities containing parking spaces complying with Section 11B-502 shall comply with Section 11B-502.8.*

ITEM 11B.10

DIVISION 2: SCOPING REQUIREMENTS

***11B*-216 Signs**

***11B*-216.6 Entrances.** *In existing buildings and facilities where* not all entrances comply with *Section 11B*-404, entrances complying with *Section 11B*-404 shall be identified by the International Symbol of Accessibility complying with *Section 11B*-703.7.2.1. Directional signs complying with *Section 11B*-703.5 that indicate the location of the nearest entrance complying with *Section 11B*-404 shall be provided at entrances that do not comply with *Section 11B*-404. *Directional signs complying with Section 11B-703.5, including the International Symbol of Accessibility complying with Section 11B-703.7.2.1, indicating the accessible route to the nearest accessible entrance shall be provided at junctions when the accessible route diverges from the regular circulation path.*

~~***Exceptions:***~~

~~*1. An International Symbol of Accessibility is not required at entrances to individual rooms, suites, offices, sales or rental establishments, or other such spaces when all entrances to the building or facility are accessible and persons entering the building or facility have passed through one or more entrances with signage complying with this section.*~~

~~*2. An International Symbol of Accessibility is not required at entrances to machinery spaces frequented only by service personnel for maintenance, repair, or occasional monitoring of equipment; for example, elevator pits or elevator penthouses; mechanical, electrical or communications equipment rooms; piping or equipment catwalks; electric substations and transformer vaults; and highway and tunnel utility facilities.*~~

ITEM 11B.11 - RESERVED

ITEM 11B.12

DIVISION 2: SCOPING REQUIREMENTS

***11B*-216 Signs**

***11B*-216.8 Toilet rooms and bathing rooms.** ~~*Entrances to toilet rooms and bathing rooms shall be identified by a geometric symbol complying with Section 11B-703.7.2.6.*~~ Where existing toilet rooms or bathing rooms do not comply with *Section 11B*-603, directional signs indicating the location of the nearest toilet room or bathing room complying with *Section 11B*-603 within the facility shall be provided. Signs shall comply with *Section 11B*-703.5 and shall include the International Symbol of Accessibility complying with *Section 11B*-703.7.2.1. Where existing toilet rooms or bathing rooms do not comply with *Section 11B*-603, the toilet rooms or bathing rooms complying with *Section 11B*-603 shall be identified by the International Symbol of Accessibility complying with *Section 11B*-703.7.2.1. Where clustered single user toilet rooms or bathing facilities are permitted to use exceptions to *Section 11B*-213.2, toilet rooms or bathing facilities complying with *Section 11B*-603 shall be identified by the International Symbol of

Accessibility complying with *Section 11B*-703.7.2.1 unless all toilet rooms and bathing facilities comply with *Section 11B*-603. *Existing buildings that have been remodeled to provide specific toilet rooms or bathing rooms for public use that comply with these building standards shall have the location of and the directions to these rooms posted in or near the building lobby or entrance on a sign complying with Section 11B-703.5, including the International Symbol of Accessibility complying with Section 11B-703.7.2.1.*

11B-216.8.1 Geometric Symbols. *Geometric symbols complying with Section 11B-703.7.2.6 shall be provided at entrances to toilet and bathing rooms.*

Exceptions:

1. *Geometric symbols shall not be required at entrances to toilet and bathing rooms located within private or semi-private rooms or spaces. Such spaces include but are not limited to; patient sleeping rooms, transient lodging guest rooms, and residential dwelling units.*

2. *Geometric symbols shall not be required at entrances to inmate toilet rooms and bathing rooms in detention and correctional facilities where only one gender is housed.*

ITEM 11B.12.01 – RELATED CODE AMENDMENT

DIVISION 7: COMMUNICATION ELEMENTS AND FEATURES

***11B*-703.7 Symbols of accessibility. ...**
***11B*-703.7.2 Symbols**

11B-703.7.2.6 Toilet and bathing facilities geometric symbols. ~~*Doorways leading to toilet rooms and bathing rooms shall be identified by a geometric symbol complying with Section 11B-703.7.2.6. The symbol*~~ *Geometric symbols at entrances to toilet and bathing rooms shall be mounted at 58 inches (1473 mm) minimum and 60 inches (1524 mm) maximum above the finish floor or ground surface measured from the centerline of the symbol. Where a door is provided the symbol shall be mounted within 1 inch (25 mm) of the vertical centerline of the door.*

~~***Exception:*** *Geometric symbols shall not be required at inmate toilet rooms and bathing rooms in detention and correctional facilities where only one gender is housed.*~~

11B-703.7.2.6.1 Men's toilet and bathing facilities. ~~*Men's toilet and bathing facilities shall be identified by an equilateral triangle, ¼ inch (6.4 mm) thick with edges 12 inches (305 mm) long and a vertex pointing upward.*~~ *An equilateral triangle, 1/4 inch (6.4 mm) thick with edges 12 inches (305 mm) long and a vertex pointing upward, shall be located at entrances to men's toilet and bathing facilities. The triangle symbol shall contrast with the door, either light on a dark background or dark on a light background.*

11B-703.7.2.6.2 Women's toilet and bathing facilities. ~~*Women's toilet and bathing facilities shall be identified by a circle, ¼ inch (6.4 mm) thick and 12 inches (305 mm) in diameter.*~~ *A circle, 1/4 inch (6.4 mm) thick and 12 inches (305 mm) in diameter, shall be located at entrances to women's toilet and bathing facilities. The circle symbol shall contrast with the door, either light on a dark background or dark on a light background.*

11B-703.7.2.6.3 Unisex toilet and bathing facilities. ~~*Unisex toilet and bathing facilities shall be identified by a circle, ¼ inch (6.4 mm) thick and 12 inches (305 mm) in diameter with a ¼ inch (6.4 mm) thick triangle with a vertex pointing upward superimposed on the circle and*~~

~~within the 12-inch (305 mm) diameter.~~ A circle, 1/4 inch (6.4 mm) thick and 12 inches (305 mm) in diameter with a 1/4 inch (6.4 mm) thick triangle with a vertex pointing upward, superimposed on and geometrically inscribed within the circle and within the 12-inch (305 mm) diameter, shall be provided at entrances to unisex toilet and bathing facilities. The vertices of the triangle shall be located 1/4 inch (6.4 mm) maximum from the edge of the circle. The triangle symbol shall contrast with the circle symbol, either light on a dark background or dark on a light background. The circle symbol shall contrast with the door, either light on a dark background or dark on a light background.

11B-703.7.2.6.4 Edges and vertices on geometric symbols. Edges shall be eased or rounded at 1/16 inch (1.59 mm) minimum, or chamfered at 1/8 inch (3.2 mm) maximum. Vertices shall be radiused between 1/8 inch (3.2 mm) minimum and 1/4 inch (6.4 mm) maximum.

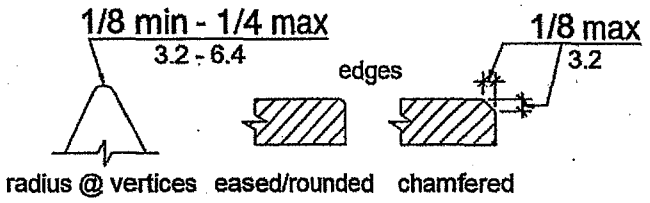

FIGURE 11B-703.7.2.6.4
EDGES AND VERTICES ON GEOMETRIC SYMBOLS

ITEM 11B.13

DIVISION 2: SCOPING REQUIREMENTS

***11B*-216 Signs**

~~**11B-216.13 Cleaner Air Symbol.**~~

~~**11B-216.13.1 Use of Cleaner Air Symbol.** Use of the Cleaner Air Symbol is voluntary. Where publicly funded facilities or any facilities leased or rented by the State of California, not including concessionaires, comply with the conditions of use identified in Section 11B-216.13.3, a Cleaner Air Symbol complying with Section 11B-703.7.2.5 is permitted to be posted in compliance with Section 11B-216.3 to indicate rooms, facilities, and path of travels that are accessible to and usable by people who are adversely impacted by airborne chemicals or particulates and/or the use of electrical fixtures and/or devices.~~

~~**11B-216.13.2 Removal of Cleaner Air Symbol.** If the path of travel, room and/or facility identified by the Cleaner Air Symbol should temporarily or permanently cease to meet the minimum conditions of use identified in Section 11B-216.13.3, the Cleaner Air Symbol shall be removed and shall not be replaced until the minimum conditions are again met.~~

~~**11B-216.13.3 Conditions of use.** The Cleaner Air Symbol shall be permitted for use to identify a path of travel, and a room or a facility when the following is met:~~

~~1. Floor or wall coverings, floor or wall covering adhesives, carpets, formaldehyde-emitting particleboard cabinetry, cupboards or doors have not been installed or replaced in the previous 12 months.~~

~~2. Incandescent lighting provided in lieu of fluorescent or halogen lighting, and electrical systems and equipment shall be operable by or on behalf of the occupant or user of the room, facility or path of travel.~~

~~3. Heating, ventilation, air conditioning and their controls shall be operable by or on behalf of the occupant or user.~~

~~4. To maintain "cleaner air" designation only nonirritating, nontoxic products will be used in cleaning, maintenance, disinfection, pest management or for any minimal touch-ups that are essential for occupancy of the area. Deodorizers or Fragrance Emission Devices and Systems (FEDS) shall not be used in the designated area. Pest control practices for cleaner air areas shall include the use of bait stations using boric acid, sticky traps and silicon caulk for sealing cracks and crevices. Areas shall be routinely monitored for pest problems. Additional nontoxic treatment methods, such as temperature extremes for termites, may be employed in the event of more urgent problems. These pest control practices shall not be used 48 hours prior to placement of the sign, and the facility shall be ventilated with outside air for a minimum of 24 hours following use or application.~~

~~5. Signage shall be posted requesting occupants or users not to smoke or wear perfumes, colognes or scented personal care products. Fragranced products shall not be used in the designated cleaner-air room, facility or path of travel.~~

~~6. A log shall be maintained on site, accessible to the public either in person or by telephone, e-mail, fax or other accessible means as requested. One or more individuals shall be designated to maintain the log. The log shall record any product or practice used in the cleaner air designated room, facility or path of travel, as well as scheduled activities, that may impact the cleaner air designation. The log shall also include the product label as well as the Material Safety Data Sheets (MSDS).~~

~~11B-216.14~~ 11B-216.13 Variable message signs. ...

ITEM 11B.13.01 – RELATED CODE AMENDMENT
DIVISION 7: COMMUNICATION ELEMENTS AND FEATURES

***11B*-703.7 Symbols of accessibility. ...**
***11B*-703.7.2 Symbols**

11B-703.7.2.5 ~~Cleaner Air Symbol.~~ Reserved. ~~Rooms, facilities and paths of travel that are accessible to and usable by people who are adversely impacted by airborne chemicals or particulate(s) and/or the use of electrical fixtures and/or devices shall be identified by the Cleaner Air Symbol complying with Figure 11B-703.7.2.5. This symbol is to be used strictly for publicly funded facilities or any facilities leased or rented by state of California, not concessionaires.~~

~~The symbol, which shall include the text "Cleaner Air" as shown, shall be displayed either as a negative or positive image within a square that is a minimum of 6 inches (152 mm) on each side. The symbol may be shown in black and white or in color. When color is used, it shall be Federal Blue (Color No. 15090 Federal Standard 595B) on white, or white on Federal Blue.~~

~~There shall be at least a 70 percent color contrast between the background of the sign from the surface that it is mounted on.~~

~~*FIGURE 11B-703.7.2.5*~~
~~*CLEANER AIR SYMBOL*~~

ITEM 11B.14

WITHDRAWN

ITEM 11B.15

DIVISION 2: SCOPING REQUIREMENTS

11B*-220 Automatic teller machines, fare machines *and point-of-sale devices

11B*-220.1 *Automatic teller machines and fare machines. Where automatic teller machines or self-service fare vending, collection, or adjustment machines are provided *they shall comply with Section 11B-220.1*. Where bins are provided for envelopes, waste paper, or other purposes, at least one of each type shall comply with *Section 11B*-811.

11B-220.1.1 One automatic teller machine or fare machine. *Where one automatic teller machine or fare machine is provided at a location, it shall comply with Sections 11B-707.2 through 11B-707.8.*

11B-220.1.2 Two automatic teller machines or fare machines. *Where two automatic teller machines or fare machines are provided at a location, one shall comply with Sections 11B-707.2 through 11B-707.8 and one shall comply with Sections ~~11B-309, 11B-707.2~~, 11B-707.3, 11B-707.4, 11B-707.5, 11B-707.6, 11B-707.7.2 and 11B-707.8.*

11B-220.1.3 Three or more automatic teller machines or fare machines. *Where three or more automatic teller machines or fare machines are provided at a location, at least 50 percent shall comply with Sections 11B-707.2 through 11B-707.8 and the rest shall comply with Sections ~~11B-309, 11B-707.2,~~ 11B-707.3, 11B-707.4, 11B-707.5, 11B-707.6, 11B-707.7.2 and 11B-707.8.*

ITEM 11B.15.01 – RELATED CODE AMENDMENT
DIVISION 7: COMMUNICATION ELEMENTS AND FEATURES

11B*-707 Automatic teller machines, fare machines *and point-of-sale devices

***11B*-707.1 General.** Automatic teller machines, fare machines *and point-of-sale devices* shall comply with *Section 11B*-707.

***11B*-707.2 Clear floor or ground space.** A clear floor or ground space complying with *Section 11B*-305 shall be provided.

Exception: Clear floor or ground space shall not be required at drive-up only automatic teller machines and fare machines.

***11B*-707.3 Operable parts.** Operable parts shall comply with *Section 11B*-309. Unless a clear or correct key is provided, each operable part shall be able to be differentiated by sound or touch, without activation.

~~**Exception:**~~ ***Exceptions:***

1. Drive-up only automatic teller machines and fare machines shall not be required to comply with *Sections 11B*-309.2 and *11B*-309.3.

2. *Where automatic teller machines and fare machines do not require compliance with Section 11B-707.2, compliance with Sections 11B-309.2 and 11B-309.3 shall not be required.*

ITEM 11B.16

DIVISION 2: SCOPING REQUIREMENTS

11B*-220 Automatic teller machines, fare machines *and point-of-sale devices

11B-220.2 Point-of-sale devices. *Where point-of-sale devices are provided, all devices at each location shall comply with Sections ~~11B-309.4,~~ 11B-707.3, ~~and~~ 11B-707.7.2, and 11B-707.9. ~~In addition, point-of-sale systems that include a video touch screen or any other non-tactile keypad shall comply with either Section 11B-707.9.1.1 or 11B-707.9.1.2.~~ Where point-of-sale devices are provided at check stands and sales and service counters required to comply with Sections 11B-227.2 and 11B-227.3, they shall comply with ~~Section~~ Sections 11B-707.2, 11B-707.3, 11B-707.7.2, and 11B-707.9. ~~11B-707.9.1, and shall also comply with Sections 11B-707.2, 11B-707.3 and 11B-707.4.~~*

~~***Exception:***~~ ***Exceptions:***

1. *Where a single point-of-sale device is installed for use with any type of motor fuel, it shall comply with Sections ~~11B-220.2 and 11B-309~~ 11B-707.2, 11B-707.3, 11B-707.7.2, and 11B-707.9. Where more than one point-of-sale device is installed for use with a specific type of motor fuel, a minimum of two for that type shall comply with Sections ~~11B-220.2 and 11B-309~~ 11B-707.2, 11B-707.3, 11B-707.7.2, and 11B-707.9. Types of motor fuel include, but are not limited to, gasoline, diesel, compressed natural gas, methanol, or ethanol ~~or electricity~~.*

2. *Point-of-sale devices at electric vehicle charging stations required to comply with Section 11B-812 shall comply with Section 11B-812.10.3.*

ITEM 11B.16.01 – RELATED CODE AMENDMENT
DIVISION 7: COMMUNICATION ELEMENTS AND FEATURES

11B*-707 Automatic teller machines, fare machines *and point-of-sale devices

***11B*-707.1 General.** Automatic teller machines, fare machines *and point-of-sale devices* shall comply with *Section 11B*-707.

***11B*-707.2 Clear floor or ground space.** A clear floor or ground space complying with *Section 11B*-305 shall be provided.

Exception: Clear floor or ground space shall not be required at drive-up only automatic teller machines and fare machines.

***11B*-707.3 Operable parts.** Operable parts shall comply with *Section 11B*-309. Unless a clear or correct key is provided, each operable part shall be able to be differentiated by sound or touch, without activation.

Exceptions:

1. Drive-up only automatic teller machines and fare machines shall not be required to comply with *Sections 11B*-309.2 and *11B*-309.3.

2. *Where automatic teller machines and fare machines do not require compliance with 11B-707.2, compliance with 11B-309.2 and 11B-309.3 shall not be required.*

3. *Where point-of-sale devices do not require compliance with Section 11B-707.2, compliance with Sections 11B-309.2 and 11B-309.3 shall not be required.*

ITEM 11B.16.02 – RELATED CODE AMENDMENT
DIVISION 7: COMMUNICATION ELEMENTS AND FEATURES

11B-707.9 Point-of-sale devices. *Point-of-sale devices shall comply with Section 11B-707.9.*

11B-707.9.1 General. *~~Where point-of-sale devices are provided, all devices at each location shall comply with Sections 11B-309.4, 11B-707.3, and 11B-707.7.2. In addition, point-of-sale~~ Point-of-sale systems that include a video touch screen or any other non-tactile keypad shall be equipped with either of the following:*

11B-707.9.1.1 Tactilely discernible numerical keypad. *...*
11B-707.9.1.2 Other technology. *...*

~~***11B-707.9.2 Point-of-sale devices at check stands and sales or service counters.*** *Where point-of-sale devices are provided at check stands and sales or service counters, they shall comply with Section 11B-707.9.1, and shall also comply with Sections 11B-707.2, 11B-707.3 and 11B-707.4.*~~

ITEM 11B.17

DIVISION 2: SCOPING REQUIREMENTS

***11B*-221 Assembly areas**

***11B*-221.2 Wheelchair spaces.** Wheelchair spaces complying with *Section 11B*-221.2 shall be provided in assembly areas with fixed seating.

NOTE: *When required wheelchair spaces are not occupied by persons eligible for those spaces, individual, removable seats may be placed in those spaces.*

11B-221.2.4 Temporary structures. *Wheelchair spaces shall not be located on, or be obstructed by, temporary platforms or other movable structures.*

Exception: *When an entire seating section is placed on temporary platforms or other movable structures in an area where fixed seating is not provided, in order to increase seating for an event, wheelchair spaces may be placed in that section.*

~~***NOTE:*** *When required wheelchair spaces are not occupied by persons eligible for those spaces, individual, removable seats may be placed in those spaces.*~~

ITEM 11B.18

DIVISION 2: SCOPING REQUIREMENTS

11B-224* Transient lodging guest rooms, *housing at a place of education and social service center establishments

11B-224.7 Housing at a place of education. *Housing at a place of education subject to this section shall comply with Sections 11B-224.1 through 11B-224.6 and 11B-806 for transient lodging guest rooms. For the purposes of the application of this section, the term "sleeping room" is interchangeable with "guest room" as used in the transient lodging standards.*

~~***Exceptions:***~~ ***Exception:***

1. ~~*Kitchens within housing units containing accessible sleeping rooms with mobility features (including suites and clustered sleeping rooms) or on floors containing accessible sleeping rooms with mobility features shall provide turning spaces that comply with Section 11B-809.2.2 and kitchen work surfaces that comply with Section 11B-804.3.*~~

2. ~~*Multi-bedroom housing units containing accessible sleeping rooms with mobility features shall have an accessible route throughout the unit in compliance with Section 11B-809.2.*~~

3. *Housing facilities that are provided by or on behalf of a place of education, with residential dwelling units leased on a year round basis exclusively to graduate students or faculty, and that do not contain any public use or common use areas available for educational programming, are not subject to Section 11B-224 and shall comply with Section 11B-233.*

11B-224.7.1 Multi-bedroom housing units with mobility features. *Multi-bedroom housing units containing accessible sleeping rooms with mobility features shall have an accessible route throughout the unit in compliance with Section 11B-809.2. Kitchens, when provided, within housing units containing accessible sleeping rooms with mobility features shall comply with Section 11B-804.*

11B-224.7.2 Multi-bedroom housing units with adaptable features. *Multi-bedroom housing units with adaptable features shall be provided as required by Section 11B-233.3.1.2. The number of required multi-bedroom housing units with adaptable features shall be reduced by the number of multi-bedroom housing units with mobility features required by Section 11B-224.2.*

ITEM 11B.19

DIVISION 2: SCOPING REQUIREMENTS

***11B*-233 Residential facilities.**
11B*-233.3 *Public housing facilities. ...

11B-233.3.1.2.4. Multi-story residential dwelling units. *In elevator buildings, public housing facilities with multi-story residential dwelling units shall comply with the following:*

~~***Exception:*** *In non-elevator buildings, a minimum of 10 percent but not less than one of the ground floor multi-story residential dwelling units shall comply with Section 11B-233.3.1.2.4, calculated using the total number of multi-story residential dwelling units in buildings on a site.*~~

1. *The primary entry of the multi-story residential dwelling unit shall be on an accessible route. In buildings with elevators the primary entry shall be on the floor served by the elevator.*

2. *At least one powder room or bathroom shall be located on the primary entry level.*

3. *Rooms or spaces located on the primary entry level shall be served by an accessible route and comply with Chapter 11A, Division IV – Dwelling Unit Features.*

Exception: *In non-elevator buildings, a minimum of 10 percent but not less than one of the ground floor multi-story residential dwelling units shall comply with Section 11B-233.3.1.2.4, calculated using the total number of multi-story residential dwelling units in buildings on a site.*

ITEM 11B.20

WITHDRAWN

ITEM 11B.21

DIVISION 2: SCOPING REQUIREMENTS

***11B*-233 Residential facilities.**
11B*-233.3 *Public housing facilities. ...

***11B*-233.3.4 Alterations.** Alterations *to a public housing facility* shall comply with *Section 11B*-233.3.4.

Exception: Where compliance with *Section 11B*-809.2, *11B*-809.3, or *11B*-809.4 *for units with mobility features or Chapter 11A, Division IV for units with adaptable features* is technically infeasible, or where it is technically infeasible to provide an accessible route to a residential dwelling unit, the entity shall be permitted to alter or construct a comparable residential dwelling unit to comply with *Sections 11B*-809.2 through *11B*-809.4 *or Chapter 11A, Division IV* provided that the minimum number of residential dwelling units required by *Sections 11B*-233.3.1.1, *11B*-233.3.1.2 *and 11B-233.3.1.3*, as applicable, is satisfied.

ITEM 11B.22

WITHDRAWN

ITEM 11B.23

DIVISION 2: SCOPING REQUIREMENTS

11B-245 ~~Commercial facilities~~ Public accommodations located in private residences

11B-245.1 General. *~~Commercial facilities~~ Public accommodations located in private residences shall comply with Section 11B-245.*

11B-245.2 Application. *When a ~~commercial facility~~ public accommodation is located in a private residence, that portion used exclusively in the operation of the ~~commercial facility~~ public accommodation or that portion used both for the ~~commercial facility~~ public accommodation and for residential purposes is covered by the new construction and alterations requirements of this chapter.*

> ***Exception:*** *The portion of the residence used exclusively as a residence is not required to be accessible in accordance with this chapter.*

ITEM 11B.24

WITHDRAWN

ITEM 11B.24.01 – RELATED CODE AMENDMENT

WITHDRAWN

ITEM 11B.24.02 – RELATED CODE AMENDMENT

WITHDRAWN

ITEM 11B.24.03 – RELATED CODE AMENDMENT

WITHDRAWN

ITEM 11B.24.04 – RELATED CODE AMENDMENT

WITHDRAWN

ITEM 11B.24.05 – RELATED CODE AMENDMENT

WITHDRAWN

ITEM 11B.25

DIVISION 4: ACCESSIBLE ROUTES

***11B*-403 Walking surfaces**
***11B*-403.5 Clearances. ...**

***11B*-403.5.1 Clear width.** Except as provided in *Sections 11B*-403.5.2 and *11B*-403.5.3, *and unless otherwise specified,* the clear width of walking surfaces shall be 36 inches (*914* mm) minimum. *The clear width for walking surfaces in corridors serving an occupant load of 10 or more shall be 44 inches (1118 mm) minimum. The clear width for aisles shall be 36 inches (914 mm) minimum if serving elements on only one side, and 44 inches (1118 mm) minimum if serving elements on both sides. The clear width for accessible routes to accessible toilet compartments shall be 44 inches (1118 mm) minimum except for door-opening widths and door swings.*

~~***Exceptions:***~~ ***Exception:***

~~*1.*~~ The clear width shall be permitted to be reduced to 32 inches (*813* mm) minimum for a length of 24 inches (610 mm) maximum provided that reduced width segments are separated by segments that are 48 inches (*1219* mm) long minimum and 36 inches (*914* mm) wide minimum.

~~*2. The clear width for walking surfaces in corridors serving an occupant load of 10 or more shall be 44 inches (1118 mm) minimum.*~~

~~*3. The clear width for sidewalks and walks shall be 48 inches (1219 mm) minimum. When, because of right-of-way restrictions, natural barriers or other existing conditions, the enforcing agency determines that compliance with the 48-inch (1219 mm) clear sidewalk width would create an unreasonable hardship, the clear width may be reduced to 36 inches (914 mm).*~~

~~*4. The clear width for aisles shall be 36 inches (914 mm) minimum if serving elements on only one side, and 44 inches (1118 mm) minimum if serving elements on both sides.*~~

~~*5. The clear width for accessible routes to accessible toilet compartments shall be 44 inches (1118 mm) except for door-opening widths and door swings.*~~

11B-403.5.1.1 Sidewalks and walks. *The clear width for sidewalks and walks shall be 48 inches (1219 mm) minimum. In alterations where existing conditions make provision of 48 inches (1219 mm) minimum clear width infeasible, the clear width for sidewalks and walks shall be permitted to be reduced to 36 inches (914 mm) minimum for a length of 24 inches (610 mm) maximum provided that reduced width segments are separated by segments that are 48 inches (1219 mm) long minimum and 48 inches (1219 mm) wide minimum; existing conditions include, but are not limited to, right-of-way restrictions, utility poles, street lights, and traffic signal hardware.*

ITEM 11B.26

DIVISION 4: ACCESSIBLE ROUTES

11B-404 Doors, doorways, and gates

***11B*-404.2.9 Door and gate opening force.** The force for pushing or pulling open a door or gate shall be as follows:

1. Interior hinged doors and gates: 5 pounds (22.2 N) maximum.
2. Sliding or folding doors: 5 pounds (22.2 N) maximum.
3. *Required fire doors: the minimum opening force allowable by the appropriate administrative authority, not to exceed 15 pounds (66.7 N).*
4. *Exterior hinged doors: 5 pounds (22.2 N) maximum.*

These forces do not apply to the force required to retract latch bolts or disengage other devices that hold the door or gate in a closed position.

~~*Exceptions:*~~ *Exception:*

~~*1. Exterior doors to machinery spaces including, but not limited to, elevator pits or elevator penthouses; mechanical, electrical or communications equipment rooms; piping or equipment catwalks; electric substations and transformer vaults; and highway and tunnel utility facilities.*~~

~~*2.*~~ *When, at a single location, one of every eight exterior door leafs, ...*

ITEM 11B.27

DIVISION 4: ACCESSIBLE ROUTES

***11B*-407 Elevators**

***11B*-407.2.3 Hoistway signs. ...**

***11B*-407.2.3.1 Floor designation. ...**

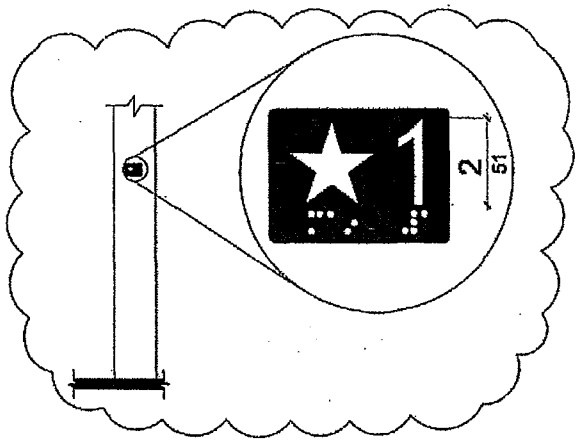

Figure *11B*-407.2.3.1
Floor Designations on Jambs of Elevator Hoistway ~~Entrance~~ Entrances

---

ITEM 11B.28

DIVISION 4: ACCESSIBLE ROUTES

***11B*-407 Elevators**

***11B*-407.3 Elevator door requirements. Hoistway and car doors shall comply with *Section 11B*-407.3.**

***11B*-407.3.5 Door delay.** Elevator doors shall remain fully open in response to a car call for 5 seconds minimum.

ITEM 11B.29

DIVISION 4: ACCESSIBLE ROUTES

11B-411 Destination-oriented elevators
11B-411.1 General. ...

11B-411.1.1 Floor designations. ...

11B-411.1.2 Car designations. *Elevator cars shall be designated with a single alphabetic character. For elevators programmed to the same hall call console or group of hall call consoles, each elevator car shall be designated with a different single alphabetic character.*

Exception: *Elevator systems with more than 26 elevators shall be permitted to use alpha-numeric designations such as "A1".*

ITEM 11B.30

DIVISION 4: ACCESSIBLE ROUTES

11B-411 Destination-oriented elevators
11B-411.2 Elevator landing requirements. ...
11B-411.2.1 Hall call consoles. ...
11B-411.2.1.2 Required features. *Hall call consoles shall include a touch screen or keypad with display screen, an accessibility function button, and audio output loudspeaker.*

11B-411.2.1.2.1 Keypads. ...

11B-411.2.1.2.2 Touch screen. *Touch screen display shall comply with Section 11B-411.2.1.2.4. ~~The touch screen shall provide written or visual instruction on the screen as to its use.~~*

11B-411.2.1.2.3 Accessibility function button. ...

11B-411.2.1.2.4 Display screen. *Upon activation of the accessibility function button, the display screen shall display information on the location and use of the star (✶) and minus sign (-) buttons, user input confirmation, elevator assignment characters, direction to the assigned elevator, and error messages. The display screen shall comply with Section 11B-411.2.1.2.4.*

11B-411.2.1.2.4.1 Contrast. ...
11B-411.2.1.2.4.2 Size. ...
11B-411.2.1.2.4.3 Duration. ...

11B-411.2.1.2.5 Audio output. ..

ITEM 11B.31

DIVISION 4: ACCESSIBLE ROUTES

11B-411 Destination-oriented elevators
11B-411.2 Elevator landing requirements. ...
11B-411.2.1 Hall call consoles. ...
11B-411.2.1.2 Required features. *Hall call consoles shall include a touch screen or keypad with display screen, an accessibility function button, and audio output loudspeaker.*

11B-411.2.1.2.1 Keypads. ...

11B-411.2.1.2.2 Touch screen. *...*
11B-411.2.1.2.3 Accessibility function button. *...*

11B-411.2.1.2.4 Display screen. *Upon activation of the accessibility function button, the display screen shall display information ~~on the location and use of the star (*) and minus sign (-) buttons~~, including but not limited to, operating instructions, user input confirmation, elevator assignment characters, direction to the assigned elevator, and error messages. The display screen shall comply with Section 11B-411.2.1.2.4.*

11B-411.2.1.2.4.1 Contrast. *...*
11B-411.2.1.2.4.2 Size. *...*
11B-411.2.1.2.4.3 Duration. *...*

11B-411.2.1.2.5 Audio output. *..*

ITEM 11B.32

DIVISION 4: ACCESSIBLE ROUTES

11B-411 Destination-oriented elevators

11B-411.2 Elevator landing requirements. *...*
11B-411.2.1 Hall call consoles. *...*
11B-411.2.1.2 Required features. *Hall call consoles shall include a touch screen or keypad with display screen, an accessibility function button, and audio output loudspeaker.*

11B-411.2.1.2.1 Keypads. *...*
11B-411.2.1.2.2 Touch screen. *...*
11B-411.2.1.2.3 Accessibility function button. *...*
11B-411.2.1.2.4 Display screen. *...*

11B-411.2.1.2.5 Audio output. *Upon activation of the accessibility function button, the audio output shall provide verbal announcements, including but not limited to, ~~of~~ operating instructions, ~~location and use of the star (*) and minus sign (-) buttons,~~ user input confirmation, announcement of the elevator assignment characters, direction to the assigned elevator, and error messages. Audio output shall be recorded or digitized human speech, and shall be delivered through a loudspeaker. Auditory volume shall be at least 10 dB above ambient sound level, but shall not exceed 80 dB, measured 36 inches (914 mm) in front of the console. At hall call console locations where the ambient sound level varies, auditory volume shall be maintained at the required volume by an automatic gain control or shall be set at not less than 75 dB.*

ITEM 11B.33

DIVISION 4: ACCESSIBLE ROUTES

11B-411 Destination-oriented elevators

11B-411.2 Elevator landing requirements. *...*
11B-411.2.1 Hall call consoles. *...*

11B-411.2.1.3 Arrangement. *Hall call console arrangement of required features shall comply with Section 11B-411.2.1.3.*

11B-411.2.1.3.1 Keypad call console arrangement. ...
11B-411.2.1.3.2 Touch screen call console arrangement. ...
11B-411.2.1.3.3 Proximity of required elements. ...

11B-411.2.1.3.4 Position. *Display screens and touch screens shall be positioned so glare is reduced on the screen. ~~The face of individual elements or group of individual elements that are operated by user input~~ Keypads or buttons shall slope away from the user at 15 to 25 degrees from the vertical plane. ~~The face of hall call console assemblies and the face of touch~~ Touch screens shall be sloped away from the user at 7 to 25 degrees from the vertical plane. ~~Display screens and touch screens shall be positioned so glare is reduced on the screen.~~*

ITEM 11B.34

DIVISION 4: ACCESSIBLE ROUTES

***11B*-407 Elevators**

11B-411.2.3 Signs on jambs of elevator hoistway entrances. *Signs on jambs of elevator hoistway entrances shall comply with Section 11B-411.2.3.*

11B-411.2.3.1 Floor designation signs. ...
11B-411.2.3.2 Car designation signs. ...

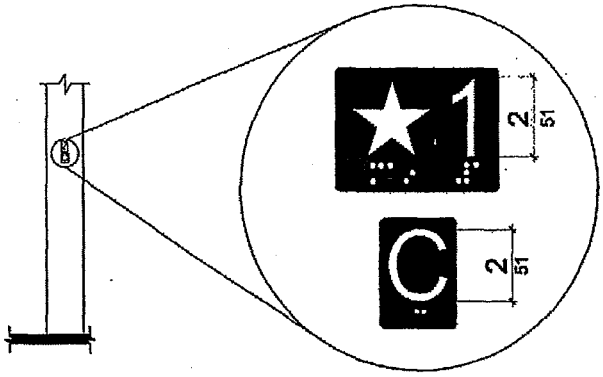

Figure 11B-411.2.3
Floor Designation and Car Designation Signs on Jambs of Destination-Oriented Elevator Hoistway ~~Signs~~ Entrances

---

ITEM 11B.35

WITHDRAWN

ITEM 11B.36

DIVISION 5: GENERAL SITE AND BUILDING ELEMENTS

***11B*-502 Parking spaces**

***11B*-502.6 Identification.** Parking space identification signs shall include the International Symbol of Accessibility complying with *Section 11B*-703.7.2.1 *in white on a blue background*. Signs identifying van parking spaces shall contain *additional language or an additional sign with* the designation "van accessible." Signs shall be 60 inches (*1524* mm) minimum above the finish floor or ground surface measured to the bottom of the sign.

***Exception:** Signs located within an accessible route shall be a minimum of 80 inches (2032 mm) above the finish floor or ground surface measured to the bottom of the sign.*

ITEM 11B.37

DIVISION 5: GENERAL SITE AND BUILDING ELEMENTS

***11B*-502 Parking spaces**

***11B*-502.6 Identification.** Parking space identification signs shall include the International Symbol of Accessibility complying with *Section 11B*-703.7.2.1. Signs identifying van parking spaces shall contain *additional language or an additional sign with* the designation "van accessible." Signs shall be 60 inches (*1524* mm) minimum above the finish floor or ground surface measured to the bottom of the sign.

***Exception:** Signs located within ~~an accessible route~~ a circulation path shall be a minimum of 80 inches (2032 mm) above the finish floor or ground surface measured to the bottom of the sign.*

ITEM 11B.38

DIVISION 5: GENERAL SITE AND BUILDING ELEMENTS

***11B*-502 Parking spaces**

***11B*-502.6 Identification.** Parking space identification signs shall include the International Symbol of Accessibility complying with *Section 11B*-703.7.2.1. Signs identifying van parking spaces shall contain *additional language or an additional sign with* the designation ~~"van accessible."~~ *"van accessible".* Signs shall be 60 inches (*1524* mm) minimum above the finish floor or ground surface measured to the bottom of the sign.

***Exception:** Signs located within an accessible route shall be a minimum of 80 inches (2032 mm) above the finish floor or ground surface measured to the bottom of the sign.*

***11B-502.6.1 Finish and size.** ...*

***11B-502.6.2 Minimum fine.** Additional language or an additional sign below the International Symbol of Accessibility shall state ~~"Minimum Fine $250."~~ "Minimum Fine $250".*

***11B-502.6.3 Location.** ...*
***11B-502.6.4 Marking.** ...*

ITEM 11B.39

DIVISION 5: GENERAL SITE AND BUILDING ELEMENTS

***11B*-502 Parking spaces**

***11B*-502.6 Identification.** ...

11B-502.6.1 Finish and size. ...

11B-502.6.2 Minimum fine. ...

11B-502.6.3 Location. ...

11B-502.6.4 Marking. *Each accessible car and van space shall have surface identification complying with either Section 11B-502.6.4.1 or 11B-502.6.4.2.*

11B-502.6.4.1 *The parking space shall be marked with an International Symbol of Accessibility complying with Section 11B-703.7.2.1 in white on a blue background a minimum 36 inches wide by 36 inches high (914 mm x 914 mm). The centerline of the International Symbol of Accessibility shall be a maximum of 6 inches (152 mm) from the centerline of the parking space, its sides parallel to the length of the parking space and its lower corner at, or lower side aligned with, the end of the parking space length.*

11B-502.6.4.2 *The parking space shall be outlined in blue or painted blue and shall be marked with an International Symbol of Accessibility complying with Section 11B-703.7.2.1 a minimum 36 inches wide by 36 inches high (914 mm x 914 mm) in white or a suitable contrasting color. The centerline of the International Symbol of Accessibility shall be a maximum of 6 inches (152 mm) from the centerline of the parking space, its sides parallel to the length of the parking space and its lower corner at, or lower side aligned with, the end of the parking space.*

ITEM 11B.40

WITHDRAWN

ITEM 11B.41

DIVISION 5: GENERAL SITE AND BUILDING ELEMENTS

***11B*-503 Passenger drop-off and loading zones**

~~***11B-503.6 Identification.*** *Each passenger loading zone designated for persons with disabilities shall be identified with a reflectorized sign complying with Section 11B-703.5. It shall be permanently posted immediately adjacent to and visible from the passenger loading zone stating "Passenger Loading Zone Only" and including the International Symbol of Accessibility complying with Section 11B-703.7.2.1 in white on a dark blue background.*~~

ITEM 11B.42

DIVISION 5: GENERAL SITE AND BUILDING ELEMENTS

***11B*-505 Handrails**

***11B*-505.2 Where required.** Handrails shall be provided on both sides of stairs and ramps.

Exceptions:

1. In assembly areas, handrails shall not be required on both sides of aisle ramps where a handrail is provided at either side or within the aisle width.
2. *Curb ramps do not require handrails.*

3. *At door landings, handrails are not required when the ramp run is less than 6 inches (152 mm) in rise or 72 inches (1829 mm) in length.*

11B-505.2.1 Orientation. *The orientation of at least one handrail shall be in the direction of the stair run, perpendicular to the direction of the stair nosing, and shall not reduce the minimum required width of the stair.*

ITEM 11B.43

DIVISION 6: PLUMBING ELEMENTS AND FACILITIES

***11B*-603 Toilet and bathing rooms**
***11B*-603.2 Clearances. ...**

***11B*-603.2.3 Door swing.** Doors shall not swing into the clear floor space or clearance required for any fixture. *Doors to accessible water closet compartments shall be permitted to encroach into the turning space without limitation. Other than ~~the door~~ doors to ~~the~~ accessible water closet ~~compartment~~ compartments, a door, in any position, ~~may~~ shall be permitted to encroach into the turning space by 12 inches (305 mm) maximum.*

Exceptions:

1. ***Reserved.***
2. Where the toilet room or bathing room is for individual use and a clear floor space complying with *Section 11B*-305.3 is provided within the room beyond the arc of the door swing, doors shall be permitted to swing into the clear floor space or clearance required for any fixture.

ITEM 11B.44

DIVISION 6: PLUMBING ELEMENTS AND FACILITIES

***11B*-603 Toilet and bathing rooms**
***11B*-603.2 Clearances. ...**

***11B*-603.2.3 Door swing.** Doors shall not swing into the clear floor space or clearance required for any fixture. *Other than the door to the accessible water closet compartment, a door, in any position, may encroach into the turning space by 12 inches (305 mm) maximum.*

Exceptions:

1. ***Reserved.***
2. Where the toilet room or bathing room is for individual use and a clear floor space complying with *Section 11B*-305.3 is provided within the room beyond the arc of the door swing, doors shall be permitted to swing into the clear floor space or clearance required for any fixture.

3. *In residential dwelling units complying with Section 11B-233.3.1.1, doors shall be permitted to swing over the turning space without limitation.*

ITEM 11B.45

DIVISION 6: PLUMBING ELEMENTS AND FACILITIES

***11B*-604 Water closets and toilet compartments**

***11B*-604.9 Water closets and toilet compartments for children's use.** Water closets and toilet compartments for children's use shall comply with *Section 11B*-604.9. *When the exception in Section 11B-604.1 is used, the suggested dimensions of Table 11B-604.9 for a single age group shall be applied consistently to the installation of a water closet and all associated components.*

Table 11B-604.9 Suggested Dimensions for Children's Use

***Suggested Dimensions* for Water Closets Serving Children Ages 3 through 12**			
	Ages 3 and 4	**Ages 5 through 8**	**Ages 9 through 12**
Water Closet Centerline	12 inches (305 mm)	12 to 15 inches (305 to *381* mm)	15 to 18 inches (*381* to *457* mm)
Toilet Seat Height	11 to 12 inches (*279* to 305 mm)	12 to 15 inches (305 to *381* mm)	15 to 17 inches (*381* to *432* mm)
Grab Bar Height	18 to 20 inches (*457* to *508* mm)	20 to 25 inches (*508* to 635 mm)	25 to 27 inches (635 to *686* mm)
Dispenser Height	14 inches (*356* mm)	14 to 17 inches (*356* to *432* mm)	17 to 19 inches (*432* to *483* mm)

ITEM 11B.46

DIVISION 6: PLUMBING ELEMENTS AND FACILITIES

***11B*-608 Shower compartment**

***11B*-608.6 Shower spray unit and water.** A shower spray unit with a hose 59 inches (*1499* mm) long minimum that can be used both as a fixed-position shower head and as a hand-held shower shall be provided. The shower spray unit shall have an on/off control with a non-positive shut-off. If an adjustable-height shower head on a vertical bar is used, the bar shall be installed so as not to obstruct the use of grab bars. Shower spray units shall deliver water that is 120°F (49°C) maximum.

Exception: *Where subject to excessive vandalism, two fixed shower heads shall be ~~installed~~ permitted instead of a hand-held spray unit in facilities that are not medical care facilities, long-term care facilities, transient lodging guest rooms, or residential dwelling units. Each shower head shall be installed so it can be operated independently of the other and shall have swivel angle adjustments, both vertically and horizontally. One shower head shall be located at a height of 48 inches (1219 mm) maximum above the shower finish floor.*

ITEM 11B.47

DIVISION 7: COMMUNICATION ELEMENTS AND FEATURES

***11B*-705 Detectable warnings and detectable directional texture**
11B-705.1 Detectable warnings.

***11B-705.1.1* General. ...**

***11B-705.1.1.1* Dome size.** Truncated domes in a detectable warning surface shall have a base diameter of 0.9 inch *(22.9 mm)* minimum and *0.92 inch (23.4 mm)* maximum, a top diameter of *0.45 inch (11.4 mm) minimum and 0.47 inch (11.9 mm) maximum*, and a height of ~~*0.18 inch (4.6 mm) minimum and 0.22 inch (5.6 mm) maximum*~~ *0.2 inch (5.1 mm)*.

ITEM 11B.48

WITHDRAWN

ITEM 11B.49

DIVISION 7: COMMUNICATION ELEMENTS AND FEATURES

***11B*-707 Automatic teller machines, fare machines and point–of-sale devices**
***11B*-707.7 Display screen.** ...

***11B*-707.7.1 Visibility.** The display screen shall be visible from a point located 40 inches (*1016* mm) above the center of the clear floor space in front of the machine.

11B-707.7.1.1 Vertically mounted display screen. *Where display screens are mounted vertically or ~~no more than 30 degrees~~ tipped away from the viewer less than 30 degrees, the center line of the display screen and other display devices shall be no more than 52 inches (1321 mm) above the floor or ground surface.*

11B-707.7.1.2 Angle-mounted display screen. *Where display screens are mounted ~~between 30 degrees and 60 degrees~~ tipped away from the viewer 30 degrees to less than 60 degrees from vertical, the center line of the display screen and other display devices shall be no more than 44 inches (1118 mm) above the floor or ground surface.*

11B-707.7.1.3 Horizontally mounted display screen. *Where display screens are mounted ~~no less than 60 degrees and no more than 90 degrees (horizontal)~~ tipped away from the viewer 60 degrees to 90 degrees (horizontal) from vertical, the center line of the display screen and other display devices shall be no more than 34 inches (864 mm) above the floor or ground surface.*

ITEM 11B.50

WITHDRAWN

ITEM 11B.51

DIVISION 8: SPECIAL ROOMS, SPACES, AND ELEMENTS

11B-812 Electric vehicle charging stations

11B-812.1 General. *Electric vehicle charging stations (EVCS) shall comply with Section 11B-812 as required by Section 11B-228.3. Where vehicle spaces and access aisles are marked with lines, measurements shall be made from the centerline of the markings.*

Exception: *Where vehicle spaces or access aisles are not adjacent to another vehicle space, access aisle, or parking space, measurements shall be permitted to include the full width of the line defining the vehicle space or access aisle.*

11B-812.2 Operable parts. *Operable parts shall comply with Section 11B-309.*

11B-812.3 Floor or ground surfaces. *Vehicle spaces and access aisles serving them shall comply with Section 11B-302. Access aisles shall be at the same level as the vehicle space they serve. Changes in level, slopes exceeding 1:48, and detectable warnings shall not be permitted in vehicle spaces and access aisles.*

11B-812.4 Vertical clearance. *Vehicle spaces, access aisles serving them, and vehicular routes serving them shall provide a vertical clearance of 98 inches (2489 mm) minimum. Where provided, overhead cable management systems shall not obstruct required vertical clearance.*

11B-812.5 Accessible routes

11B-812.5.1 Accessible route to building or facility. *EVCS complying with Section 11B-812 that serve a particular building or facility shall be located on an accessible route to an entrance complying with Section 11B-206.4. Where EVCS do not serve a particular building or facility, EVCS complying with Section 11B-812 shall be located on an accessible route to an accessible pedestrian entrance of the EV charging facility.*

Exception: *EVCS complying with Section 11B-812 shall be permitted to be located in different EV charging facilities if substantially equivalent or greater accessibility is provided in terms of distance from an accessible entrance or entrances, charging fee, and user convenience.*

11B-812.5.2 Accessible route to EV charger. *An accessible route complying with Section 11B-402 shall be provided between the vehicle space and the EV charger which serves it.*

11B-812.5.3 Relationship to accessible routes. *Vehicle spaces and access aisles shall be designed so that when the vehicle space is occupied the required clear width of adjacent accessible routes is not obstructed. A curb, wheel stop, bollards, or other barrier shall be provided if required to prevent encroachment of vehicles over the required clear width of adjacent accessible routes.*

11B-812.5.4 Arrangement. *Vehicle spaces and access aisles shall be designed so that persons using them are not required to travel behind vehicle spaces or parking spaces other than the vehicle space in which their vehicle has been left to charge.*

Exceptions:

1. *Ambulatory EVCS shall not be required to comply with Section 11B-812.5.4.*
2. *Vehicle spaces installed in existing facilities shall comply with Section 11B-812.5.4 to the maximum extent feasible.*

11B-812.5.5 Obstructions. *EVCS shall be designed so accessible routes are not obstructed by cables or other elements.*

11B-812.6 Vehicle spaces. *Vehicle spaces serving van accessible, standard accessible, ambulatory and drive-up EVCS shall be 216 inches (5486 mm) long minimum and shall comply with Sections 11B-812.6.1 through 11B-812.6.4 as applicable. All vehicle spaces shall be marked to define their width.*

Exceptions:

1. *Where the long dimension of vehicle spaces is parallel to the traffic flow in the adjacent vehicular way, the length of vehicle spaces shall be 240 inches (6096 mm) minimum.*
2. *Vehicle spaces at drive-up EVCS shall be 240 inches (6096 mm) long minimum and shall not be required to be marked to define their width.*

11B-812.6.1 Van accessible. *Vehicle spaces serving van accessible EVCS shall be 144 inches (3658 mm) wide minimum and shall have an adjacent access aisle complying with Section 11B-812.7.*

11B-812.6.2 Standard accessible. *Vehicle spaces serving standard accessible EVCS shall be 108 inches (2743 mm) wide minimum and shall have an adjacent access aisle complying with Section 11B-812.7.*

11B-812.6.3 Ambulatory. *Vehicle spaces serving ambulatory EVCS shall be 120 inches (3048 mm) wide minimum and shall not be required to have an adjacent access aisle.*

11B-812.6.4 Drive-up. *Vehicle spaces serving drive-up EVCS shall be 204 inches (5182 mm) wide minimum and shall not be required to have an adjacent access aisle.*

11B-812.7 Access aisle. *Access aisles shall adjoin an accessible route. Two vehicle spaces shall be permitted to share a common access aisle. Access aisles shall be 60 inches (1524 mm) wide minimum and shall extend the full required length of the vehicle spaces they serve.*

11B-812.7.1 Location. *Access aisles at vehicle spaces shall not overlap the vehicular way and may be placed on either side of the vehicle space they serve except for van accessible spaces which shall have access aisles located on the passenger side of the vehicle spaces.*

11B-812.7.2 Marking. *Access aisles at vehicle spaces shall be marked with a painted borderline around their perimeter. The area within the borderlines shall be marked with hatched lines a maximum of 36 inches (914 mm) on center. The color of the borderlines, hatched lines, and letters shall contrast with that of the surface of the access aisle. The blue color required for identification of access aisles for accessible parking shall not be used. Access aisle markings may extend beyond the minimum required length.*

11B-812.7.3 Lettering. *The words "NO PARKING" shall be painted on the surface within each access aisle in letters a minimum of 12 inches (305 mm) in height and located to be visible from the adjacent vehicular way.*

11B-812.8 Identification signs. *EVCS identification signs shall be provided in compliance with Section 11B-812.8.*

11B-812.8.1 Four or fewer. *Where four or fewer total EVCS are provided, identification with an International Symbol of Accessibility (ISA) shall not be required.*

11B-812.8.2 Five to twenty-five. *Where five to twenty-five total EVCS are provided, one van accessible EVCS shall be identified by an ISA complying with Section 11B-703.7.2.1. The required standard accessible EVCS shall not be required to be identified with an ISA.*

11B-812.8.3 Twenty-six or more. *Where twenty-six or more total EVCS are provided, all required van accessible and all required standard accessible EVCS shall be identified by an ISA complying with Section 11B-703.7.2.1.*

11B-812.8.4 Ambulatory. *Ambulatory EVCS shall not be required to be identified by an ISA.*

11B-812.8.5 Drive-up. *Drive-up EVCS shall not be required to be identified by an ISA.*

11B-812.8.6 Finish and size. *Identification signs shall be reflectorized with a minimum area of 70 square inches (45,161 mm^2).*

11B-812.8.7 Location. *Required identification signs shall be visible from the EVCS it serves. Signs shall be permanently posted either immediately adjacent to the vehicle space or within the projected*

vehicle space width at the head end of the vehicle space. Signs identifying van accessible vehicle spaces shall contain the designation "van accessible." Signs shall be 60 inches (1525 mm) minimum above the finish floor or ground surface measured to the bottom of the sign. Signs located within an accessible route shall be 80 inches (2032 mm) minimum above the finish floor or ground surface measured to the bottom of the sign. Signs may also be permanently posted on a wall at the interior end of the vehicle space.

11B-812.9 Surface marking. *EVCS vehicle spaces shall provide surface marking stating "EV CHARGING ONLY" in letters 12 inches (305 mm) high minimum. The centerline of the text shall be a maximum of 6 inches (152 mm) from the centerline of the vehicle space and its lower corner at, or lower side aligned with, the end of the parking space length.*

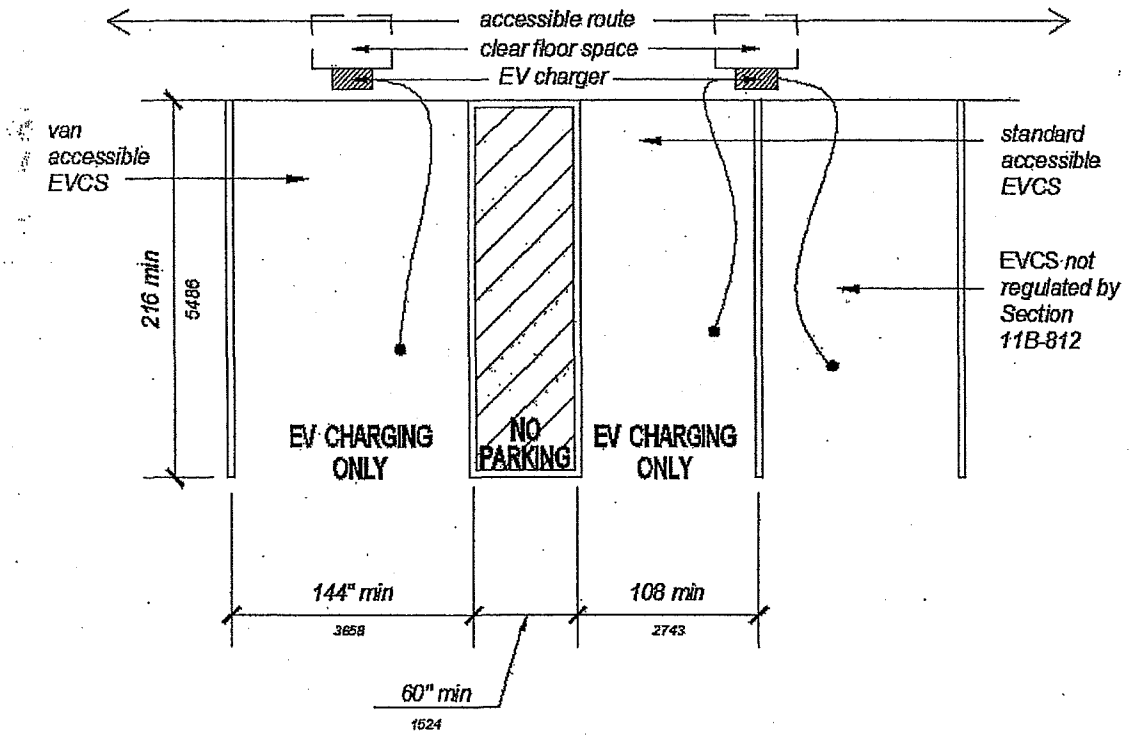

FIGURE 11B-812.9
SURFACE MARKING

11B-812.10 Electric vehicle chargers.

11B-812.10.1 General. *EV chargers shall comply with Section 11B-812.10.*

11B-812.10.2 Operable parts. *Operable parts and charging cord storage shall comply with Section 11B-309.*

11B-812.10.3 Point-of-sale devices. *Where provided, point-of-sale devices shall comply with Sections 11B-707.2, 11B-707.3, 11B-707.7.2, and 11B-707.9.*

11B-812.10.4 Location. *EV chargers shall be adjacent to, and within the projected width of the vehicle space being served.*

Exceptions:

1. *EV chargers serving more than one EVCS shall be adjacent to, and within the combined projected width of the vehicle spaces being served.*
2. *For alterations at existing facilities where an accessible route or general circulation path is not provided adjacent to the head end of the vehicle space or access aisle, the EV charger may be located within the projected width of the access aisle 36 inches (914 mm) maximum from the head end of the space.*
3. *Where the long dimension of a vehicle space is parallel to the vehicular way, the EV charger shall be adjacent to, and 48 inches (1219 mm) maximum from the head end or foot end of the vehicle space or access aisle being served.*

ITEM 11B.51.01 – RELATED CODE AMENDMENT

CHAPTER 2 – DEFINITIONS
SECTION 202 – Definitions

DRIVE-UP ELECTRIC VEHICLE CHARGING STATION. *An electric vehicle charging station in which use is limited to 30 minutes maximum and is provided at a location where the electric vehicle approaches in the forward direction, stops in the vehicle space, charges the vehicle, and proceeds forward to depart the vehicle space. The arrangement of a drive-up electric vehicle charger and its associated vehicle space is similar to a gasoline filling station island.*

ELECTRIC VEHICLE (EV). *An automotive-type vehicle for on-road use, such as passenger automobiles, buses. trucks vans, neighborhood electric vehicles, electric motorcycles, and the like, primarily powered by an electric motor that draws current from a rechargeable storage battery, fuel cell, photovoltaic array, or other source of electric current. Plug-in hybrid electric vehicles (PHEV) are considered electric vehicles. For the purpose of this code, off-road, self-propelled electric vehicles, such as industrial trucks, hoists, lifts, transports, golf carts, airline ground support equipment, tractors, boats, and the like, are not included.*

ELECTRIC VEHICLE (EV) CHARGER. *Off-board charging equipment used to charge an electric vehicle.*

ELECTRIC VEHICLE CHARGING SPACE (EV Space). *A space intended for charging electric vehicles.*

ELECTRIC VEHICLE CHARGING STATION (EVCS). *One or more electric vehicle charging spaces served by an electric vehicle charger or other charging equipment. Where a multiport electric vehicle charger can simultaneously charge more than one vehicle, the number of electric vehicle charging stations shall be considered equivalent to the number of electric vehicles that can be simultaneously charged.*

ELECTRIC VEHICLE (EV) CONNECTOR. *A device that, when electrically coupled (conductive or inductive) to an electric vehicle inlet, establishes an electrical connection to the electric vehicle for the purpose of power transfer and information exchange. This device is part of the electric vehicle coupler.*

ITEM 11B.51.02 – RELATED CODE AMENDMENT

CHAPTER 11B
DIVISION 1: APPLICATION AND ADMINISTRATION

11B-106.5 Defined terms. ...

DRIVE-UP ELECTRIC VEHICLE CHARGING STATION

ELECTRIC VEHICLE (EV)

ELECTRIC VEHICLE (EV) CHARGER

ELECTRIC VEHICLE CHARGING SPACE (EV SPACE)

ELECTRIC VEHICLE CHARGING STATION (EVCS)

ELECTRIC VEHICLE (EV) CONNECTOR

ITEM 11B.51.03 – RELATED CODE AMENDMENT

CHAPTER 11B
DIVISION 2: SCOPING

***11B*-202 Existing buildings and facilities**

***11B*-202.4 Path of travel requirements in alterations, additions and structural repairs.** *When alterations or additions are made to existing buildings or facilities, an accessible path of travel to the specific area of alteration or addition shall be provided. The primary accessible path of travel shall include:*

1. *A primary entrance to the building or facility,*
2. *Toilet and bathing facilities serving the area,*
3. *Drinking fountains serving the area,*
4. *Public telephones serving the area, and*
5. *Signs.*

Exceptions: *...*

11. *Alterations solely for the purpose of installing electric vehicle charging stations (EVCS) at facilities where vehicle fueling, recharging, parking or storage is a primary function shall comply with Section 11B-202.4 to the maximum extent feasible without exceeding 20 percent of the cost of the work directly associated with the installation of EVCS.*

    Alterations solely for the purpose of installing EVCS at facilities where vehicle fueling, recharging, parking or storage is not a primary function shall not be required to comply with Section 11B-202.4.

ITEM 11B.51.04 – RELATED CODE AMENDMENT

CHAPTER 11B
DIVISION 2: SCOPING

***11B*-208 Parking spaces**

***11B*-208.1 General.** Where parking spaces are provided, parking spaces shall be provided in accordance with *Section 11B*-208. *For the purposes of this section, electric vehicle charging stations are not parking spaces; see Section 11B-228.*

Exception: ...

ITEM 11B.51.05 – RELATED CODE AMENDMENT

CHAPTER 11B
DIVISION 2: SCOPING

11B*-228 Depositories, vending machines, change machines, mail boxes, ~~and~~ fuel dispensers*, and electric vehicle charging stations

***11B*-228.1 General.** Where provided, at least one of each type of depository, vending machine, change machine, and fuel dispenser shall comply with *Section 11B*-309. *Electric vehicle charging stations shall comply with Section 11B-228.3.*

Exception: Drive-up only depositories shall not be required to comply with *Section 11B*-309.

***11B*-228.2 Mail boxes.** Where mail boxes are provided...

11B-228.3 Electric vehicle charging stations

11B-228.3.1 General. *Where electric vehicle charging stations (EVCS) are provided, EVCS shall be provided in accordance with Section 11B-228.3.*

11B-228.3.1.1 Existing facilities. *Where new EVCS are added to a facility with existing EVCS, the requirements of Section 11B-812 shall apply only to the new EVCS installed. Alterations to existing EVCS shall comply with Section 11B-228.3.*

11B-228.3.1.2 Operable parts. *Where EV chargers are provided, operable parts on all EV chargers shall comply with Section 11B-309.4.*

11B-228.3.2 Minimum number. *EVCS complying with Section 11B-812 shall be provided in accordance with Section 11B-228.3.2. Where EVCS are provided in more than one facility on a site, the number of EVCS complying with Section 11B-228.3.2 provided on the site shall be calculated according to the number required for each facility. Where an EV charger can simultaneously charge more than one vehicle, the number of EV chargers provided shall be considered equivalent to the number of electric vehicles that can be simultaneously charged.*

Exceptions:

1. *EVCS not available to the general public and intended for use by a designated vehicle or driver shall not be required to comply with Section 11B-228.3.2. Examples include, but are not limited to, EVCS serving public or private fleet vehicles and EVCS assigned to an employee.*

2. *In public housing facilities, EVCS intended for use by an EV owner or operator at their residence shall not be required to comply with Section 11B-228.3.2.*

11B-228.3.2.1 Public use or common use EVCS. *Where EVCS are provided for public use or common use, EVCS complying with Section 11B-812 shall be provided in accordance with Table 11B-228.3.2.1. Where new EVCS are installed in facilities with existing EVCS, the "Total Number of EVCS at a Facility" in Table 11B-228.3.2.1 shall include both existing and new EVCS.*

Exception: *All drive-up EVCS shall comply with Section 11B-812.*

TABLE 11B-228.3.2.1
ELECTRIC VEHICLE CHARGING STATIONS FOR PUBLIC USE AND COMMON USE

Total Number of EVCS at a Facility[1]	Minimum Number (by type) of EVCS Required to Comply with Section 11B-812[1]		
	Van Accessible	Standard Accessible	Ambulatory
1 to 4	1	0	0
5 to 25	1	1	0
26 to 50	1	1	1
51 to 75	1	2	2
76 to 100	1	3	3
101 and over	1, plus 1 for each 300, or fraction thereof, over 100	3, plus 1 for each 60, or fraction thereof, over 100	3, plus 1 for each 50, or fraction thereof, over 100

Notes:

1. *Where an EV charger can simultaneously charge more than one vehicle, the number of EVCS provided shall be considered equivalent to the number of electric vehicles that can be simultaneously charged.*

ITEM 11B.51.06 – RELATED CODE AMENDMENT

CHAPTER 11B
DIVISION 3: BUILDING BLOCKS

11B-309 Operable parts

11B-309.1 General. *Operable parts shall comply with Section 11B-309.*

11B-309.2 Clear floor space. *A clear floor or ground space complying with Section 11B-305 shall be provided.*

11B-309.3 Height. *Operable parts shall be placed within one or more of the reach ranges specified in Section 11B-308.*

11B-309.4 Operation. *Operable parts shall be operable with one hand and shall not require tight grasping, pinching, or twisting of the wrist. The force required to activate operable parts shall be 5 pounds (22.2 N) maximum.*

Exception: *Gas pump nozzles and electric vehicle connectors shall not be required to provide operable parts that have an activating force of 5 pounds (22.2 N) maximum.*

CHAPTER 16
STRUCTURAL DESIGN

DSA-AC proposes to carry forward its adoption of specific model code provisions and California amendments in Chapter 16, from the 2013 CA Building Code into the 2016 CA Building Code.

ITEM 16.00

CHAPTER 16 – MATRIX ADOPTION TABLE

Adopting Agency		DSA-AC
Adopt entire Chapter		
Adopt entire Chapter as amended (amended Sections listed below)		
Adopt only those Sections that are listed below		X
Chapter / Section		
1607.8.2		X

ITEM 16.01

SECTION 1607
LIVE LOADS

1607.8 Loads on handrails, guards, grab bars, shower seats, dressing room bench seats and vehicle barriers. ...

1607.8.2 Grab bars, shower seats and dressing room bench seats. Grab bars, shower seats and dressing room bench seat systems shall be designed to resist a single concentrated load of 250 pounds (1.11 kN) applied in any direction at any point on the grab bar or seat so as to produce the maximum load effects. ***[DSA-AC]*** *See Chapter 11A, Section 1127A.4, and Chapter 11B, Sections 11B-609.8, 11B-610.4 and 11B-903.6, for grab bars, shower seats and dressing room bench seats, as applicable.*

CHAPTER 16A
STRUCTURAL DESIGN

DSA-AC proposes to carry forward its adoption of existing California amendments in Chapter 16A, from the 2013 CA Building Code into the 2016 CA Building Code.

ITEM 16A.00

CHAPTER 16A – MATRIX ADOPTION TABLE

Adopting Agency	DSA-AC
Adopt entire Chapter	
Adopt entire Chapter as amended (amended Sections listed below)	
Adopt only those Sections that are listed below	X
Chapter / Section	
1607A.8.2	X

ITEM 16A.01

SECTION 1607A
LIVE LOADS

1607A.8 Loads on handrails, guards, grab bars, shower seats, dressing room bench seats and vehicle barriers. ...

1607A.8.2 Grab bars, shower seats and dressing room bench seats. Grab bars, shower seats and dressing room bench seat systems shall be designed to resist a single concentrated load of 250 pounds (1.11 kN) applied in any direction at any point on the grab bar or seat so as to produce the maximum load effects. ***[DSA-AC]*** *See Chapter 11A, Section 1127A.4, and Chapter 11B, Sections 11B-609.8, 11B-610.4 and 11B-903.6, for grab bars, shower seats and dressing room bench seats, as applicable.*

CHAPTER 30
ELEVATORS AND CONVEYING SYSTEMS

DSA-AC proposes to carry forward its adoption of specific model code provisions and California amendments in Chapter 30, from the 2013 CA Building Code into the 2016 CA Building Code, with further amendment as indicated.

ITEM 30.00

CHAPTER 30 – MATRIX ADOPTION TABLE

Adopting Agency	DSA-AC
Adopt entire Chapter	
Adopt entire Chapter as amended (amended Sections listed below)	
Adopt only those Sections that are listed below	X
Chapter / Section	
~~3001.1 w/ Exception~~	~~X~~
3001.3	X

ITEM 30.01

SECTION 3001
GENERAL

3001.1 Scope. This chapter governs the design, construction, installation, alteration and repair of elevators and conveying systems and their components.

> ~~***Exception: [DSA-AC]*** *For accessibility requirements for platform lifts and elevators, see California Code of Regulations, Title 8 and Title 24, Part 2, Sections 1124A, Sections 11B-206.6, 11B-206.7, 11B-407 and 11B-410.*~~

3001.3 Accessibility. Passenger elevators *and platform (wheelchair) lifts* required to be accessible or to serve as part of an accessible means of egress shall comply with ~~*Sections 1009 and 1109.7 by Chapter 11A or 11B shall conform to*~~ *Section 1009 and either Chapter 11A for applications listed in Section 108.2.1.2 regulated by the Department of Housing and Community Development or Chapter 11B for applications listed in Section 1.9.1 regulated by the Division of the State Architect–Access Compliance.*

CHAPTER 31
SPECIAL CONSTRUCTION

DSA-AC proposes to carry forward its adoption of specific model code provisions and California amendments in Chapter 31, from the 2013 CA Building Code into the 2016 CA Building Code, with further amendment as indicated.

ITEM 31.00

CHAPTER 31 – MATRIX ADOPTION TABLE

Adopting Agency		DSA-AC
Adopt entire Chapter		
Adopt entire Chapter as amended (amended Sections listed below)		
Adopt only those Sections that are listed below		X
Chapter / Section		
3104.2, Exc 2		X

ITEM 31.01

SECTION 3104
PEDESTRIAN WALKWAYS AND TUNNELS

3104.2 Separate structures. Buildings connected by pedestrian walkways or tunnels shall be considered to be separate structures.

Exceptions:

1. ...
2. ~~For purposes of calculating the number of Type B units required by Chapter 11, structurally connected buildings and buildings with multiple wings shall be considered one structure.~~ ***[DSA-AC]*** *For purposes of accessibility in residential facilities as required by Chapter 11A and Chapter 11B, structurally connected buildings, buildings connected by stairs, walkways, or roofs, and buildings with multiple wings shall be considered one structure.*

CHAPTER 31B
PUBLIC POOLS

DSA-AC proposes to carry forward its adoption of existing California amendments in Chapter 31B, from the 2013 CA Building Code into the 2016 CA Building Code, with further amendment as indicated.

ITEM 31B.00

CHAPTER 31B – MATRIX ADOPTION TABLE

Adopting Agency		DSA-AC
Adopt entire Chapter		
Adopt entire Chapter as amended (amended Sections listed below)		
Adopt only those Sections that are listed below		X
Chapter / Section		
3101B (last paragraph only)		X
~~3114B.1 w/ Exception 2 only~~		~~X~~

ITEM 31B.01

SECTION 3101B
SCOPE

The provisions of this chapter shall apply to the construction, installation, renovation, alteration, addition, relocation, replacement or use of any public pool and to its ancillary facilities, mechanical equipment and related piping. Public pools include those located in or designated as the following: commercial building, hotel, motel, resort, recreational vehicle or mobile home park, campground, apartment house, condominium, townhouse, homeowner association, club, community building or area, public or private school, health club or establishment, water park, swim school, medical facility, bed and breakfast, licensed day-care facility, recreation and park district and municipal pools.

Note: *Existing law limits application of building standards. Please see Health and Safety Code Sections 18938.5 and 116050.*

[DSA-AC] *Refer to Chapter 11B for accessibility provisions applicable to public accommodations, commercial buildings and public housing.*

CHAPTER 33
SAFEGUARDS DURING CONSTRUCTION

DSA-AC proposes to carry forward its adoption of specific model code provisions and California amendments in Chapter 33, from the 2013 CA Building Code into the 2016 CA Building Code, with further amendment as indicated.

ITEM 33.00

CHAPTER 33 – MATRIX ADOPTION TABLE

Adopting Agency		DSA-AC
Adopt entire Chapter		
Adopt entire Chapter as amended (amended Sections listed below)		
Adopt only those Sections that are listed below		X
Chapter / Section		
3306.2		X

ITEM 33.01

SECTION 3306
PROTECTION OF PEDESTRIANS

3306.2 Walkways. A walkway shall be provided for pedestrian travel in front of every construction and demolition site unless the applicable governing authority authorizes the sidewalk to be fenced or closed. Walkways shall be of sufficient width to accommodate the pedestrian traffic, but in no case shall they be less than 4 feet (1219 mm) in width. Walkways shall be provided with a durable walking surface. Walkways shall be accessible in accordance with ~~Chapter 11~~ *Chapter 11A or 11B as applicable,* and shall be designed to support all imposed loads and in no case shall the design live load be less than 150 pounds per square foot (psf) (7.2 kN/m2).

CHAPTER 35
REFERENCED STANDARDS

DSA-AC proposes to carry forward its adoption of specific model code provisions and existing California amendments in Chapter 35, from the 2013 CA Building Code into the 2016 CA Building Code, with further amendment as indicated.

ITEM 35.00

CHAPTER 35 – MATRIX ADOPTION TABLE

Adopting Agency		DSA-AC
Adopt entire Chapter		
Adopt entire Chapter as amended (amended Sections listed below)		
Adopt only those Sections that are listed below		X
Chapter / Section		
~~ANSI~~		
~~ANSI S3.41~~		~~X~~
~~ANSI /SDI C 2012~~		~~X~~
ASME		
ASME A17.1-13 / CAS B44-2013		X
ASME A18.1-2008		X
ASTM		
ASTM F1292-99		X
ASTM F 1292-04		X
ASTM F 1487-01		X
ASTM F 1951-99		X
BHMA		
BHMA A156.10-2011		X
BHMA A156.19-2013		X
NFPA		
NFPA 72-13		X

ITEM 35.01

CHAPTER 35
REFERENCED STANDARDS

This chapter lists the standards that are referenced in various sections of this document. The standards are listed herein by the promulgating agency of the standard, the standard identification, the effective date and title, and the section or sections of this document that reference the standard. The application of the referenced standards shall be as specified in *Chapter 1, Administration, Division 1, Sections 1.1.5 and 1.1.7, and in Chapter 1, Administration, Division II,* Section 102.4.

ASME American Society of Mechanical Engineers
Two Park Avenue
New York, NY 10016-5990

Standard reference number	Title	Referenced in code section number
ASME/A17.1-13 CSA B44-2013	Safety Code for Elevators and Escalators	907.3.3, 911.1.5, 1009.4, *11B-407.1, 11B-407.1.1, 11B-407.4.9, 11B-408.1, 11B-409.1, 11B-411.1, 11B-810.9,* 1607.9.1, 3001.2, 3001.4, 3002.5, 3003.2, 3007.1, 3008.1.3, 3008.7.1
A18.1-2008	Safety Standard for Platform Lifts and Stairway Chairlifts	~~1109.8~~, *11B-410.1*

ASTM

ASTM International
100 Barr Harbor Drive
West Conshohocken, PA 19428-2959

Standard reference number	Title	Referenced in code section number
F 1292-99	*Standard Specification for Impact Attenuation of Surface Systems Under and Around Playground Equipment*	*11B-1008.2.6.2*
F 1292-04	*Standard Specification for Impact Attenuation of Surface Systems Under and Around Playground Equipment*	*11B-1008.2.6.2*
F 1487-01	*Standard Consumer Safety Performance Specification For Playground Equipment for Public Use*	*202-USE ZONE*
F 1951-99	*Standard Specification for Determination of Accessibility Of Surface Systems Under and Around Playground Equipment*	*11B-1008.2.6.1*

BHMA

Builders Hardware Manufacturers' Association
355 Lexington Avenue, 17th Floor
New York, NY 10017-6603

Standard reference number	Title	Referenced in code section number
A 156.10-2011	Power Operated Pedestrian Doors	*11B-404.2.9, 11B-404.3,* 1010.1.4.2
A 156.19-2013	Standard for Power Assist and Low Energy Operated Doors	*11B-404.2.9, 11B-404.3, 11B-408.3.2.1, 11B-409.3.1,* 1010.1.4.2

NFPA

National Fire Protection Association

1 Batterymarch Park
Quincy, MA 02169-7471

Standard reference number	Title	Referenced in code section number
72-13	National Fire Alarm Code, *as amended**	407.4.4.3, 407.4.4.5, 407.4.4.5.1, 901.6, 903.4.1, 904.3.5, 907.2, 907.2.6, 907.2.11, 907.2.13.2, 907.3, 907.3.3, 907.3.4, 907.5.2.1.2, 907.5.2.2, 907.5.2.2.5, *907.5.2.3.5,* 907.6, 907.6.1, 907.6.2, 907.6.6, 907.7, 907.7.1, 907.7.2, 907.2.9.3, 911.1.5, 2702.2.4, 3005.5, 3007.7

NFPA 72, As Amended by the State fire Marshal

Notation
Authority: Government Code Section 4450.
References: Government Code Sections 4450 through 4461, 12955.1(c) and 14679; Health and Safety Code Sections 18949.1, 19952 through 19959; and Vehicle Code Section 22511.8.

FINAL EXPRESS TERMS
FOR
PROPOSED BUILDING STANDARDS
OF THE
DIVISION OF THE STATE ARCHITECT - STRUCTURAL SAFETY (DSA-SS AND DSA-SS/CC)

REGARDING PROPOSED CHANGES TO
CALIFORNIA BUILDING CODE
CALIFORNIA CODE OF REGULATIONS, TITLE 24, PART 2

The Division of the State Architect (DSA) proposes to adopt the 2015 edition of the International Building Code (IBC 2015) of International Code Council for codification and effectiveness in the 2016 edition of the California Building Code as presented on the following pages, including any necessary amendments. DSA further proposes to:

- Adopt new building standards that are not addressed by the 2015 model code proposed for adoption.
- Adopt new necessary amendments to the 2015 model code proposed for adoption.
- Relocate existing adopted and necessary amendments of the current model code into the format of the 2015 model code proposed for adoption. These amendments with editorial changes only are outside the rulemaking and are not subject to public comments. All amendments shown highlighted are existing and are not part of the rulemaking.

LEGEND FOR FINAL EXPRESS TERMS (combination of 45-day and 15-day changes)
1. For 45-day and 15-Day changes, existing California amendments or code language being modified appears in *italics*, with modified language underlined.
2. For 45-day and 15-Day changes, repealed text appears in ~~strikeout~~.

Note:
Following each chapter of the proposed regulations is a notation that cites specific statute(s) that authorizes the adoption of these regulations and statute that allows for regulations to clarify the subject matter being implemented, interpreted or made specific by the authority statute(s).

EXPRESS TERMS

CHAPTER 1
SCOPE AND ADMINISTRATION

Adopt and/or codify chapter as amended below:

PROPOSED ADOPTION	DSA-SS	DSA-SS/CC	Comments
Adopt entire chapter without amendments			
Adopt entire chapter			

with amendments listed below			
Adopt only those sections listed below	X	X	
Division I			
1.1	X	X	
1.9.2	X	X	
1.9.2.1	X	-	
~~1.9.2.1.1~~	~~X~~	-	
~~1.9.2.1.2~~	~~X~~	-	
~~1.9.2.1.3~~	~~X~~	-	
1.9.2.2	-	X	
~~1.9.2.2.1~~	-	~~X~~	
~~1.9.2.2.2~~	-	~~X~~	
~~1.9.2.2.3~~	-	~~X~~	
~~1.9.2.2.4~~	-	~~X~~	
~~1.9.3~~		~~X~~	
Division II			
102.1	X	X	
102.2-102.4	X	X	
102.4.1	X	X	
102.4.3	X	X	
102.4.4	X	X	
102.5	X	X	
104.9	X	X	
104.10	X	X	
104.11	X	X	
106.1	X	X	
106.1.1	X	X	

All existing amendments that are not revised below shall continue without any change.

DIVISION I

CALIFORNIA ADMINISTRATION

SECTION 1.1

GENERAL

1.1.1 Title.
These regulations shall be known as the California Building Code, may be cited as such and will be referred to herein as "this code." The California Building Code is Part 2 of twelve parts of the official compilation and publication of the adoption, amendment and repeal of building regulations to the California Code of Regulations, Title 24, also referred to as the California Building Standards Code. This part incorporates by adoption the 2012 International Building Code of the International Code Council with necessary California amendments.

1.1.2 Purpose.
The purpose of this code is to establish the minimum requirements to safeguard the public health, safety and general welfare through structural strength, means of egress facilities, stability, access to persons with disabilities, sanitation, adequate lighting and ventilation and energy conservation; safety to life and property from fire and other hazards attributed to the built environment; and to provide safety to fire fighters and emergency responders during emergency operations.

1.1.3 Scope.
The provisions of this code shall apply to the construction, alteration, movement, enlargement, replacement, repair, equipment, use and occupancy, location, maintenance, removal and demolition of every building or structure or any appurtenances connected or attached to such buildings or structures throughout the State of California.

1.1.3.1 Nonstate-regulated buildings, structures and applications.
Except as modified by local ordinance pursuant to Section 1.1.8, the following standards in the California Code of Regulations, Title 24, Parts 2, 2.5, 3, 4, 5, 6, 9, 10 and 11 shall apply to all occupancies and applications not regulated by a state agency.

1.1.3.2 State-regulated buildings, structures and applications.
The model code, state amendments to the model code, and/or state amendments where there are no relevant model code provisions shall apply to the following buildings, structures, and applications regulated by state agencies as specified in Sections 1.2 through 1.14, except where modified by local ordinance pursuant to Section 1.1.8. When adopted by a state agency, the provisions of this code shall be enforced by the appropriate enforcing agency, but only to the extent of authority granted to such agency by the state legislature.

Note: *See Preface to distinguish the model code provisions from the California provisions.*

1. *State-owned buildings, including buildings constructed by the Trustees of the California State University, and to the extent permitted by California laws, buildings designed and constructed by the Regents of the University of California, and regulated by the Building Standards Commission. See Section 1.2 for additional scope provisions.*

2. *Local detention facilities regulated by the Corrections Standards Authority. See Section 1.3 for additional scope provisions.*

3. *Barbering, cosmetology or electrolysis establishments, acupuncture offices, pharmacies, veterinary facilities and structural pest control locations regulated by the Department of Consumer Affairs. See Section 1.4 for additional scope provisions.*

4. *Energy efficiency standards regulated by the California Energy Commission. See Section 1.5 for additional scope provisions.*

5. *Dairies and places of meat inspection regulated by the Department of Food and Agriculture. See Section 1.6 for additional scope provisions.*

6. *Organized camps, laboratory animal quarters, public swimming pools, radiation protection, commissaries serving mobile food preparation vehicles and wild animal quarantine facilities regulated by the Department of Public Health. See Section 1.7 for additional scope provisions.*

7. *Hotels, motels, lodging houses, apartment houses, dwellings, dormitories, condominiums, shelters for homeless persons, congregate residences, employee housing, factory-built housing and other types of dwellings containing sleeping accommodations with or without common toilets or cooking facilities. See Section 1.8.2.1.1 for additional scope provisions.*

8. *Accommodations for persons with disabilities in buildings containing newly constructed covered multifamily dwellings, new common use spaces serving existing covered multifamily dwellings, additions to existing buildings where the addition alone meets the definition of "COVERED MULTIFAMILY DWELLING," and common- use spaces serving covered multifamily dwellings, which are regulated by the Department of Housing and Community Development. See Section 1.8.2.1.2 for additional scope provisions.*

9. *Permanent buildings and permanent accessory buildings or structures constructed within mobile-home parks and special occupancy parks regulated by the Department of Housing and Community Development. See Section 1.8.2.1.3 for additional scope provisions.*

10. *Accommodations for persons with disabilities regulated by the Division of the State Architect. See Section 1.9.1 for additional scope provisions.*

11. *Public elementary and secondary schools, community college buildings and state-owned or state-leased essential service buildings regulated by the Division of the State Architect. See Section 1.9.2 for additional scope provisions.*

12. *Qualified historical buildings and structures and their associated sites regulated by the State Historical Building Safety Board with the Division of the State Architect. See Section 1.9.3 for additional scope provisions.*

13. *General acute care hospitals, acute psychiatric hospitals, skilled nursing and/or intermediate care facilities, clinics licensed by the Department of Public Health and correctional treatment centers regulated by the Office of Statewide Health Planning and Development. See Section 1.10 for additional scope provisions.*

14. *Applications regulated by the Office of the State Fire Marshal include, but are not limited to, the following in accordance with Section 1.11:*
    14.1. Buildings or structures used or intended for use as an:

        1. *Asylum, jail, prison*

        2. *Mental hospital, hospital, home for the elderly, children's nursery, children's home or institution, school or any similar occupancy of any capacity*

        3. *Theater, dancehall, skating rink, auditorium, assembly hall, meeting hall, nightclub, fair building or similar place of assemblage where 50 or more persons may gather together in a building, room or structure for the purpose of*

amusement, entertainment, instruction, deliberation, worship, drinking or dining, awaiting transportation, or education

4. *Small family day-care homes, large family day-care homes, residential facilities and residential facilities for the elderly, residential care facilities*

5. *State institutions or other state-owned or state- occupied buildings*

6. *High rise structures*

7. *Motion picture production studios*

8. *Organized camps*

9. *Residential structures*

14.2. Tents, awnings or other fabric enclosures used in connection with any occupancy

14.3. Fire alarm devices, equipment and systems in connection with any occupancy

14.4. Hazardous materials, flammable and combustible liquids

14.5. Public school automatic fire detection, alarm and sprinkler systems

14.6. Wildland-urban interface fire areas

15. *Public libraries constructed and renovated using funds from the California Library Construction and Renovation Bond Act of 1988 and regulated by the State Librarian. See Section 1.12 for additional scope provisions.*

16. *Graywater systems regulated by the Department of Water Resources. See Section 1.13 for additional scope provisions.*

17. *For applications listed in Section 1.9.1 regulated by the Division of the State Architect—Access Compliance, outdoor environments and uses shall be classified according to accessibility uses described in Chapters 11B.*

18. *Marine Oil Terminals regulated by the California State Lands Commission. See Section 1.14 for additional scope provisions.*

1.1.4 Appendices.
Provisions contained in the appendices of this code shall not apply unless specifically adopted by a state agency or adopted by a local enforcing agency in compliance with Health and Safety Code Section 18901 et. seq. for Building Standards Law, Health and Safety Code Section 17950 for State Housing Law and Health and Safety Code Section 13869.7 for Fire Protection Districts. See Section 1.1.8 of this code.

1.1.5 Referenced codes.
The codes, standards and publications adopted and set forth in this code, including other codes, standards and publications referred to therein are, by title and date of publication, hereby adopted as standard reference documents of this code. When this code does not specifically cover any subject related to building design and construction, recognized architectural or engineering practices shall be employed. The National Fire Codes, standards, and the Fire Protection Handbook of the National Fire Protection Association are permitted to be used as authoritative guides in determining recognized fire

prevention engineering practices.

1.1.6 Nonbuilding standards, orders and regulations.
Requirements contained in the California Building Code, or in any other referenced standard, code or document, which are not building standards as defined in Health and Safety Code Section 18909, shall not be construed as part of the provisions of this code. For nonbuilding standards, orders and regulations, see other titles of the California Code of Regulations.

1.1.7 Order of precedence and use.

1.1.7.1 Differences.
In the event of any differences between these building standards and the standard reference documents, the text of these building standards shall govern.

1.1.7.2 Specific provisions.
Where a specific provision varies from a general provision, the specific provision shall apply.

1.1.7.3 Conflicts.
When the requirements of this code conflict with the requirements of any other part of the California Building Standards Code, Title 24, the most restrictive requirements shall prevail.

1.1.8 City, county, or city and county amendments, additions or deletions.
The provisions of this code do not limit the authority of city, county, or city and county governments to establish more restrictive and reasonably necessary differences to the provisions contained in this code pursuant to complying with Section 1.1.8.1. The effective date of amendments, additions or deletions to this code by a city, county, or city and county filed pursuant to Section 1.1.8.1 shall be the date filed. However, in no case shall the amendments additions or deletions to this code be effective any sooner than the effective date of this code.

Local modifications shall comply with Health and Safety Code Section 18941.5 for Building Standards Law, Health and Safety Code Section 17958 for State Housing Law or Health and Safety Code Section 13869.7 for Fire Protection Districts.

1.1.8.1 Findings and filings.

1. *The city, county, or city and county shall make express findings for each amendment, addition or deletion based upon climatic, topographical or geological conditions.*

   Exception: *Hazardous building ordinances and programs mitigating unreinforced masonry buildings.*

2. *The city, county, or city and county shall file the amendments, additions or deletions expressly marked and identified as to the applicable findings. Cities, counties, cities and counties, and fire departments shall file the amendments, additions or deletions, and the findings with the California Building Standards Commission at 2525 Natomas Park Drive, Suite 130, Sacramento, CA 95833.*

3. *Findings prepared by fire protection districts shall be ratified by the local city, county or city and county and filed with the California Department of Housing and Community Development, Division of Codes and Standards, P.O. Box 1407, Sacramento, CA 95812-1407 or 1800 3rd Street, Room 260, Sacramento, CA 95811.*

1.1.9 Effective date of this code.
Only those standards approved by the California Building Standards Commission that are effective at the time an application for building permit is submitted shall apply to the plans and specifications for, and to the construction performed under, that permit. For the effective dates of the provisions contained in this code, see the History Note page of this code.

1.1.10 Availability of codes.
At least one complete copy each of Titles 8, 19, 20, 24 and 25 with all revisions shall be maintained in the office of the building official responsible for the administration and enforcement of this code. Each state department concerned and each city, county, or city and county shall have an up-to-date copy of the code available for public inspection. See Health and Safety Code Section 18942(d)(1) and (2).

1.1.11 Format.
This part fundamentally adopts the International Building Code by reference on a chapter-by-chapter basis. When a specific chapter of the International Building Code is not printed in the code and is marked "Reserved", such chapter of the International Building Code is not adopted as a portion of this code. When a specific chapter of the International Building Code is marked "Not adopted by the State of California" but appears in the code, it may be available for adoption by local ordinance.

> ***Note:*** *Matrix Adoption Tables at the front of each chapter may aid the code user in determining which chapter or sections within a chapter are applicable to buildings under the authority of a specific state agency, but they are not to be considered regulatory.*

1.1.12 Validity.
If any chapter, section, subsection, sentence, clause or phrase of this code is for any reason held to be unconstitutional, contrary to statute, exceeding the authority of the state as stipulated by statutes or otherwise inoperative, such decision shall not affect the validity of the remaining portion of this code.

...

1.9.2 Division of the State Architect—Structural Safety.

1.9.2.1 DSA-SS Division of the State Architect-Structural Safety.

Application—*Public elementary and secondary schools, community colleges and state-owned or state-leased essential services buildings.*

Enforcing agency—*The Division of the State Architect- Structural Safety (DSA-SS) has been delegated the responsibility and authority by the Department of General Services to review and approve the design and observe the construction of public elementary and secondary schools, community colleges and state-owned or state-leased essential services buildings.*

Authority cited—*Education Code Sections 17310 and 81142 and Health and Safety Code Section 16022.*

Reference—*Education Code Sections 17280 through 17317, and 81130 through 81147 and Health and Safety Code Sections 16000 through 16023.*

1.9.2.1.1 Applicable administrative standards.

1. ***Title 24, Part 1, California Code of Regulations:***

   1.1. Sections 4-301 through 4-355, Group 1, Chapter 4, for public elementary and secondary schools and community colleges.

   1.2. Sections 4-201 through 4-249, Chapter 4, for state-owned or state-leased essential services buildings.

2. ***Title 24, Part 2, California Code of Regulations:*** *[applies to public elementary and secondary schools, community colleges and state-owned or state-leased essential services building(s)]:*

   2.1. Sections 1.1 and 1.9.2.1 of Chapter 1, Division I.

   2.2. Sections 102.1, 102.2, 102.3, 102.4, 102.5, 104.9, 104.10, 104.11 and 106.1 of Chapter 1, Division II.

1.9.2.1.2 Applicable building standards.
California Building Standards Code, Title 24, Parts 2, 3, 4, 5, 6, 9, 10, 11 and 12, California Code of Regulations, for school buildings, community colleges and state-owned or state-leased essential service buildings.

The provisions of Title 24, Part 2, as adopted and amended by the Division of the State Architect—Structural Safety, shall apply to the applications listed in Section 1.9.2.1.

The Division of the State Architect—Structural Safety adopts the following building standards in Title 24, Part 2:

Chapters 2 through 10, 12, 14, 15, 16A, 17A, 18A, 19A, 20, 21A, 22A, 23, 24, 25, 26, 30, 31, 32, 33, ~~34,~~ and 35~~, and Appendix J~~.

1.9.2.1.3 Amendments.
Division of the State Architect—Structural Safety amendments in this code appear preceded with the acronym ***[DSA-SS].***

Exceptions:

1. *Chapters 16A, 17A, 18A, 19A, 21A, and 22A—Amendments appearing in these chapters without an acronym have been co-adopted by DSA-SS and OSHPD.*

~~2. Chapter 34, Sections 3417-3423—DSA-SS adopts these sections without the use of the DSA-SS acronym.~~

1.9.2.1.4 Reference to other chapters.
Where reference is made within this code to sections in Chapters 16, 17, 18, 19, 21, and 22, the respective sections in Chapters 16A, 17A, 18A, 19A, 21A, and 22A shall apply instead.

1.9.2.2 DSA-SS/CC Division of the State Architect-Structural Safety/Community Colleges

Application*—Community Colleges. The Division of the State Architect has been delegated the authority by the Department of General Services to promulgate alternate building standards for application to community colleges, which a community college may elect to use in lieu of standards promulgated by DSA-SS in accordance with Section 1.9.2.1.*

Enforcing agency—*Division of the State Architect-Structural Safety/Community Colleges (DSA-SS/CC)*

The Division of the State Architect has been delegated the authority by the Department of General Services to review and approve the design and oversee construction of community colleges electing to use the alternative building standards as provided in this section.

Authority cited—*Education Code Section 81053.*

Reference—*Education Code Sections 81052, 81053, and 81130 through 81147.*

1.9.2.2.1 Applicable administrative standards.

1. ***Title 24, Part 1, California Code of Regulations:***

   1.1. *Sections 4-301 through 4-355, Group 1, Chapter 4.*

2. ***Title 24, Part 2, California Code of Regulations:***

   2.1. *Sections 1.1 and 1.9.2 of Chapter 1, Division I.*

   2.2. *Sections 102.1, 102.2, 102.3, 102.4, 102.5, 104.9, 104.10, 104.11, and 106.1 of Chapter 1, Division II.*

1.9.2.2.2 Applicable building standards.
California Building Standards Code, Title 24, Parts 2, 3, 4, 5, 6, 9, 10, 11, and 12, California Code of Regulations.

The Division of the State Architect-Structural Safety/Community Colleges [DSA-SS/CC] adopts the following building standards in Title 24, Part 2:

Chapters 2 through 10, 12, 14, 15, 16, 17A, 18A, 19, 20, 21, 22, 23, 24, 25, 26, 30, 31, 32, 33, ~~34,~~ and 35~~, and Appendix J~~.

1.9.2.2.3 Amendments.
Division of the State Architect—Structural Safety/Community Colleges amendments in this code appear preceded with the acronym ***[DSA-SS/CC].***

Exceptions:

1. *Chapters 17A, and 18A—Amendments appearing in these chapters without an acronym have been co-adopted by DSA-SS, DSASS/CC, and OSHPD.*

~~2. Chapter 34, Sections 3417-3423—DSA-SS/CC adopts these sections without the use of the DSA-SS/CC acronym.~~

1.9.2.2.4 Reference to other chapters.
Where reference is made within this code to sections in Chapters 17 and 18, the respective sections in Chapters 17A and 18A shall apply instead.

...

DIVISION II
SCOPE AND ADMINISTRATION

...

SECTION 102
APPLICABILITY

...

[A] 102.4 Referenced codes and standards. The codes and standards referenced in this code shall be considered part of the requirements of this code to the prescribed extent of each such reference and as further regulated in Sections 102.4.1 ~~and 102.4.2~~ *through 102.4.4.*

...

102.4.3 Code References. [DSA-SS & DSA-SS/CC] *All reference to International Codes or other similar codes in referenced standards shall be replaced by equivalent provisions in the California Building Standards Codes.*

102.4.4 Reference in Standards. [DSA-SS & DSA-SS/CC] *All references listed in reference standards shall be replaced by referenced standards listed in Chapter 35 of this code, where applicable, and shall include all amendments to the reference standards in this code.*

...

SECTION 104
DUTIES AND POWERS OF BUILDING OFFICIAL

...

[A] 104.11 Alternative materials, design and methods of construction and equipment. The provisions of this code are not intended to prevent the installation of any material or to prohibit any design or method of construction not specifically prescribed by this code, provided that any such alternative has been *approved*. An alternative material, design or method of construction shall be *approved* where the *building official* finds that the proposed design is satisfactory and complies with the intent of the provisions of this code, and that the material, method or work offered is, for the purpose intended, not less than the equivalent of that prescribed in this code in quality, strength, effectiveness, fire resistance, durability and safety. Where the alternative material, design or method of construction is not *approved*, the *building official* shall respond in writing, stating the reasons why the alternative was not *approved. [DSA-SS &*

DSA-SS/CC] Alternative system shall satisfy ASCE 7 Section 1.3, unless more restrictive requirements are established by this code for an equivalent system.

[DSA-SS & DSA-SS/CC] Alternative systems shall also satisfy the California Administrative Code, Section 4-304.

...

SECTION 106
FLOOR AND ROOF DESIGN LOADS

[A] 106.1 Live loads posted. In commercial, institutional or industrial buildings, for each floor or portion thereof designed for live loads exceeding 50 psf (2.40 kN/m2), such design live loads shall be conspicuously posted by the owner or owner's authorized agent in that part of each *story* in which they apply, using durable signs. It shall be unlawful to remove or deface such notices.

106.1.1 Snow Load Posting. [DSA-SS & DSA-SS/CC] *Snow loads used in design shall be posted as for live loads.*

...

(All existing amendments that are not revised above shall continue without any change.)

Notation for [DSA-SS]
Authority: Education Code § 17310 and 81142, and H&S Code §16022.
Reference: Education Code §§ 17280 through 17317, and 81130 through 81147, and Health and Safety Code §§16000 through 16023.

Notation for [DSA-SS/CC]
Authority: Education Code § 81053.
Reference: Education Code §§ 81052, 81053, and 81130 through 81147.

CHAPTER 2
DEFINITIONS

Adopt and/or codify chapter as amended below:

PROPOSED ADOPTION	DSA-SS	DSA-SS/CC	Comments

Adopt entire chapter			
Adopt entire chapter with amendments listed below	X	X	
Adopt only those sections listed below			
Active Equipment/Component	X	X	
Approved Agency	X	X	
~~Diaphragm, Rigid~~	~~X~~	~~X~~	
Enforcement Agent	X	X	
Next Generation Attenuation (NGA)	X	X	
Retrofit	X	X	
Rugged Equipment	X	X	
Significant Loss of Function	X	X	
Torque-controlled post-installed anchor	X	X	

[All existing California amendments that are not revised below shall continue without change]

...

SECTION 202

DEFINITIONS

...

ACTIVE EQUIPMENT/COMPONENT. [DSA-SS, DSA-SS/CC] *Equipment/Component containing moving or rotating parts, electrical parts such as switches or relays, or other internal components that are sensitive to earthquake forces and critical to the function of the equipment.*

...

[A] APPROVED AGENCY. An established and recognized agency that is regularly engaged in conducting tests or furnishing inspection services, where such agency has been *approved* by the *building official.*

[DSA-SS, DSA-SS/CC] This term is synonymous with "laboratory of record" as referenced in Section 4-335 of the California Administrative Code.

...

~~**Diaphragm, rigid.** [DSA-SS, DSA-SS/CC] A diaphragm is rigid for the purpose of distribution of story shear and torsional moment *where so indicated in Section 12.3.1 of ASCE 7.*~~

...

ENFORCEMENT AGENT. [DSA-SS, DSA-SS/CC] *That individual within the agency or organization charged with responsibility for agency or organization compliance with the requirements of this Code. Used interchangeably with Building Official and Code Official.*

...

NEXT GENERATION ATTENUATION (NGA). [DSA-SS, DSA-SS/CC] *Attenuation relations used for the 2008 United States Geological Survey (USGS) seismic hazards maps (for the Western United States) or their equivalent as determined by the enforcement agency.*

...

RETROFIT. [DSA-SS, DSA-SS/CC] *The construction of any new element or system, or the alteration of any existing element or system required to bring an existing building, or portion thereof, conforming to earlier code requirements, into conformance with standards of the currently effective California Building Standards Code.*

...

RUGGED EQUIPMENT. [DSA-SS, DSA-SS/CC] *Rugged equipment refers to an ampleness of construction that gives such equipment the ability to survive earthquake strong motions without significant loss of function.*

...

SIGNIFANT LOSS OF FUNCTION. [DSA-SS, DSA-SS/CC] *Significant loss of function for equipment or components means the equipment or component cannot be restored to its original function by competent technicians after a design earthquake because the equipment or component require parts that are not normally stocked by the owner or not readily available.*

...

TORQUE-CONTROLLED POST-INSTALLED ANCHOR. [DSA-SS, DSA-SS/CC] *A post-installed anchor that is set by the expansion of one or more sleeves or other elements against the sides of the drilled hole through the application of torque, which pulls the cone(s) into the expansion sleeve(s); after setting, tensile loading can cause additional expansion (follow-up expansion).*

All existing amendments that are not revised above shall continue without any change.

Notation for [DSA-SS]

Authority: Education Code § 17310 and 81142, and H&S Code §16022.
Reference: Education Code §§ 17280 through 17317, and 81130 through 81147, and Health and Safety Code §§16000 through 16023.

Notation for [DSA-SS/CC]
Authority: Education Code § 81053.
Reference: Education Code §§ 81052, 81053, and 81130 through 81147.

CHAPTER 3
USE AND OCCUPANCY CLASSIFICATION

Adopt and/or codify entire chapter as amended below:

PROPOSED ADOPTION	DSA-SS	DSA-SS/CC	Comments
Adopt entire chapter	X	X	
Adopt entire chapter with amendments listed below			
Adopt only those sections listed below			

Notation for [DSA-SS]
Authority: Education Code § 17310 and 81142, and H&S Code §16022.
Reference: Education Code §§ 17280 through 17317, and 81130 through 81147, and Health and Safety Code §§16000 through 16023.

Notation for [DSA-SS/CC]
Authority: Education Code § 81053.
Reference: Education Code §§ 81052, 81053, and 81130 through 81147.

CHAPTER 4 – SPECIAL DETAILED REQUIREMENTS BASED ON USE AND OCCUPANCY

Adopt and/or codify entire chapter as amended below:

PROPOSED ADOPTION	DSA-SS	DSA-SS/CC	Comments
Adopt entire chapter	X	X	
Adopt entire chapter with amendments listed below			
Adopt only those sections listed below			

Notation for [DSA-SS]
Authority: Education Code § 17310 and 81142, and H&S Code §16022.

Reference: Education Code §§ 17280 through 17317, and 81130 through 81147, and Health and Safety Code §§16000 through 16023.

Notation for [DSA-SS/CC]
Authority: Education Code § 81053.
Reference: Education Code §§ 81052, 81053, and 81130 through 81147.

CHAPTER 5 – GENERAL BUILDING HEIGHTS AND AREAS

Adopt and/or codify entire chapter as amended below:

PROPOSED ADOPTION	DSA-SS	DSA-SS/CC	Comments
Adopt entire chapter	X	X	
Adopt entire chapter with amendments listed below			
Adopt only those sections listed below			

Notation for [DSA-SS]
Authority: Education Code § 17310 and 81142, and H&S Code §16022.
Reference: Education Code §§ 17280 through 17317, and 81130 through 81147, and Health and Safety Code §§16000 through 16023.

Notation for [DSA-SS/CC]
Authority: Education Code § 81053.
Reference: Education Code §§ 81052, 81053, and 81130 through 81147.

CHAPTER 6 – TYPES OF CONSTRUCTION

Adopt and/or codify entire chapter as amended below:

PROPOSED ADOPTION	DSA-SS	DSA-SS/CC	Comments
Adopt entire chapter	X	X	
Adopt entire chapter with amendments listed below			
Adopt only those sections listed below			

Notation for [DSA-SS]
Authority: Education Code § 17310 and 81142, and H&S Code §16022.
Reference: Education Code §§ 17280 through 17317, and 81130 through 81147, and Health and Safety Code §§16000 through 16023.

Notation for [DSA-SS/CC]
Authority: Education Code § 81053.
Reference: Education Code §§ 81052, 81053, and 81130 through 81147.

CHAPTER 7 – FIRE AND SMOKE PROTECTION FEATURES

Adopt and/or codify entire chapter as amended below:

PROPOSED ADOPTION	DSA-SS	DSA-SS/CC	Comments
Adopt entire chapter	X	X	
Adopt entire chapter with amendments listed below			
Adopt only those sections listed below			

Notation for [DSA-SS]
Authority: Education Code § 17310 and 81142, and H&S Code §16022.
Reference: Education Code §§ 17280 through 17317, and 81130 through 81147, and Health and Safety Code §§16000 through 16023.

Notation for [DSA-SS/CC]
Authority: Education Code § 81053.
Reference: Education Code §§ 81052, 81053, and 81130 through 81147.

CHAPTER 8 – INTERIOR FINISHES

Adopt and/or codify entire chapter as amended below:

PROPOSED ADOPTION	DSA-SS	DSA-SS/CC	Comments
Adopt entire chapter	X	X	
Adopt entire chapter with amendments listed below			
Adopt only those sections listed below			

Notation for [DSA-SS]
Authority: Education Code § 17310 and 81142, and H&S Code §16022.
Reference: Education Code §§ 17280 through 17317, and 81130 through 81147, and Health and Safety Code §§16000 through 16023.

Notation for [DSA-SS/CC]

Authority: Education Code § 81053.
Reference: Education Code §§ 81052, 81053, and 81130 through 81147.

CHAPTER 9 – FIRE PROTECTION SYSTEMS

Adopt and/or codify entire chapter as amended below:

PROPOSED ADOPTION	DSA-SS	DSA-SS/CC	Comments
Adopt entire chapter	X	X	
Adopt entire chapter with amendments listed below			
Adopt only those sections listed below			

Notation for [DSA-SS]
Authority: Education Code § 17310 and 81142, and H&S Code §16022.
Reference: Education Code §§ 17280 through 17317, and 81130 through 81147, and Health and Safety Code §§16000 through 16023.

Notation for [DSA-SS/CC]
Authority: Education Code § 81053.
Reference: Education Code §§ 81052, 81053, and 81130 through 81147.

CHAPTER 10 – MEANS OF EGRESS

Adopt and/or codify entire chapter as amended below:

PROPOSED ADOPTION	DSA-SS	DSA-SS/CC	Comments
Adopt entire chapter	X	X	
Adopt entire chapter with amendments listed below			
Adopt only those sections listed below			

Notation for [DSA-SS]
Authority: Education Code § 17310 and 81142, and H&S Code §16022.
Reference: Education Code §§ 17280 through 17317, and 81130 through 81147, and Health and Safety Code §§16000 through 16023.

Notation for [DSA-SS/CC]
Authority: Education Code § 81053.
Reference: Education Code §§ 81052, 81053, and 81130 through 81147.

CHAPTER 12 – INTERIOR ENVIRONMENT

Adopt and/or codify entire chapter as amended below:

PROPOSED ADOPTION	DSA-SS	DSA-SS/CC	Comments
Adopt entire chapter	X	X	
Adopt entire chapter with amendments listed below			
Adopt only those sections listed below			

Notation for [DSA-SS]
Authority: Education Code § 17310 and 81142, and H&S Code §16022.
Reference: Education Code §§ 17280 through 17317, and 81130 through 81147, and Health and Safety Code §§16000 through 16023.

Notation for [DSA-SS/CC]
Authority: Education Code § 81053.
Reference: Education Code §§ 81052, 81053, and 81130 through 81147.

CHAPTER 14

EXTERIOR WALLS

Adopt and/or codify chapter as amended below:

PROPOSED ADOPTION	DSA-SS	DSA-SS/CC	Comments
Adopt entire chapter without amendments			
Adopt entire chapter with amendments listed below	X	X	
Adopt only those sections listed below			
1405.1.1	X	X	
~~*1410*~~ *1411*	X	X	

(All existing California amendments that are not revised below shall continue without change)

...

SECTION 1405
INSTALLATION OF WALL COVERINGS

...

1405.1.1 Additional requirements. [DSA-SS & DSA-SS/CC] *In addition to the requirements of Sections 1405.6, 1405.7, 1405.8, 1405.9, and 1405.10, the installation of anchored or adhered veneer shall comply with applicable provisions of Section ~~1410~~ 1411.*

...

SECTION ~~1410~~ 1411 [DSA-SS & DSA-SS/CC]
ADDITIONAL REQUIREMENTS FOR ANCHORED AND ADHERED VENEER.

1411.1 ~~1410.1~~ General. *In no case shall veneer be considered as part of the backing in computing strength or deflection nor shall it be considered a part of the required thickness of the backing.*

Veneer shall be anchored in a manner which will not allow relative movement between the veneer and the wall.

Anchored or adhered veneer shall not be used on overhead horizontal surfaces.

1411.2 ~~1410.2~~ Adhered veneer. *Units of tile, masonry, stone or terra cotta which exceed 5/8 inch (16 mm) in thickness shall be applied as for anchored veneer where used over exit ways or more than 20 feet (6096 mm) in height above adjacent ground elevation.*

1411.2.1 ~~1410.2.1~~ Bond strength and tests. *Veneer shall develop a bond to the backing in accordance with TMS 402, Section ~~6.3.2.4~~ 12.3.2.4.*

Not less than two shear tests shall be performed for the adhered veneer between the units and the supporting element. At least one shear test shall be performed at each building for each 5,000 square feet (465 m^2) of floor area or fraction thereof.

[redacted]

Notation for [DSA-SS]
Authority: Education Code § 17310 and 81142, and H&S Code §16022.
Reference: Education Code §§ 17280 through 17317, and 81130 through 81147, and Health and Safety Code §§16000 through 16023.

Notation for [DSA-SS/CC]
Authority: Education Code § 81053.
Reference: Education Code §§ 81052, 81053, and 81130 through 81147.

CHAPTER 15

ROOF ASSEMBLIES AND ROOFTOP STRUCTURES

Adopt and/or codify chapter as amended below:

PROPOSED ADOPTION	DSA-SS	DSA-SS/CC	Comments
Adopt entire chapter			
Adopt entire chapter with amendments listed below	X	X	
Adopt only those sections listed below			
1507.3.10	X	X	
1507.7.8	X	X	
~~1509.7.1~~ 1510.7.1 Exception	X	X	
~~1512~~ 1513	X	X	

[All existing California amendments that are not revised below shall continue without change]

...

SECTION 1507

REQUIREMENTS FOR ROOF COVERINGS

...

1507.3.10 Additional requirements. [DSA-SS & DSA-SS/CC] *In addition to the requirements of 1507.3.6 and 1507.3.7, the installation of clay and concrete tile roof coverings shall comply with seismic anchorage provisions of Section 1513. ~~1512.~~*

...

1507.7.8 Additional requirements. [DSA-SS & DSA-SS/CC] *In addition to the requirements of Sections ~~-~~1507.7.5, the installation of slate shingle roof coverings shall comply with the requirements of Sections 1507.3.6 and 1507.3.7, and the seismic anchorage provisions of Section ~~1512~~1513.*

...

~~1509.7.1~~ 1510.7.1 **Wind resistance.** Rooftop-mounted photovoltaic panels and modules shall be designed for component and cladding wind loads in accordance with Chapter 16 using an effective wind area based on the dimensions of a single unit frame.

Exception: [DSA-SS, DSA-SS/CC] *The effective wind area shall be in accordance with Chapter 16 and ASCE 7 Section 26.2.*

...

SECTION 1513 ~~1512~~ [DSA-SS & DSA-SS/CC]
SEISMIC ANCHORAGE OF SLATE SHINGLE, CLAY AND CONCRETE TILE ROOF COVERINGS

1513.1 ~~1512.1~~ Fasteners. *Nails shall be long enough to penetrate into the sheathing 3/4 inch (19 mm). Where sheathing is less than 3/4 inch (19 mm) in thickness, nails shall be driven into supports, unless nails with ring shanks are used.*

All fasteners shall be corrosion resistant and fabricated of copper, stainless steel, or brass, or shall have a hot dipped galvanized coating not less than 1.0 ounce of zinc per square foot (305 gm/m^2).

Nails for slate shingles and clay or concrete tile shall be copper, brass or stainless steel with gage and length per common ferrous nails.

1513.2 ~~1512.2~~ Wire. *Wire for attaching slate shingles and clay or concrete tile shall be copper, brass or stainless steel capable of supporting four times the weight of tile.*

Wire supporting a single tile or shingle shall not be smaller than 1/16 inch (1.6 mm) in diameter. Continuous wire ties supporting more than one tile shall not be smaller than 0.084 inch (2 mm) in diameter.

1513.3 ~~1512.3~~ Metal strips. *Metal strips for attaching slate shingles and clay or concrete tile shall be copper, brass or stainless steel capable of supporting four times the weight of tile.*

1513.4 ~~1512.4~~ Clay or concrete tiles. *Clay or concrete tile shall be installed in accordance with Table 1507.3.7 and as described herein.*

1. *On wood roofs or roofs of other material to which wood strips are secured, every cover or top tile when fastened with nails shall be nailed directly into 1-1/4 inches (32 mm) sound grain soft wood strips of sufficient height to support the tile.*

Pan or bottom tiles shall be nailed directly to the roof sheathing or to wood strips. Wood strips shall be secured to the roof by nails spaced not over 12 inches (305 mm) apart.

2. *On concrete roofs, wires shall be secured in place by wire loops embedded into the concrete not less than 2 inches (51 mm). The wire loops shall be spaced not more than 36 inches (914 mm) on center parallel to the eaves, and spaced vertically to allow for the minimum 3 inches (76 mm) lapping of the tile.*

3. *Where continuous ties of twisted wire, interlocking wires or metal strips extending from the ridge to eave are used to attach tile, the ties shall be attached to the roof construction at the ridge, eave, and at intervals not exceeding 10 feet 0 inch (3048 mm) on center. The ties within 2 feet 0 inch (610 mm) of the rake shall be attached at intervals of 5 feet 0 inch (1524 mm).*

   Attachment for continuous ties shall be nails, screws, staples or approved clips of the same material as the ties and shall not be subjected to withdrawal forces. Attachments for continuous ties shall have an allowable working stress shear resistance of not less than twice the dead weight of the tile tributary to the attachment, but not less than 300 pounds (136 kg).

4. *Tile with projecting anchor lugs at the bottom of the tiles shall be held in position by means of 1-inch by 2-inch (25mm by 51mm) wood stripping nailed to the roof sheathing over the underlay.*

5. *Clay or concrete tile on roofs with slopes exceeding 24 units vertical in 12 units horizontal (200 percent slope) shall be attached as required for veneer in Chapter 14. The nose of all tiles shall be securely fastened.*

6. *Clay or concrete tile shall have a minimum of two fasteners per tile. Tiles that are 8 inches (203 mm) in width or less are permitted to be fastened at the center of the head with one fastener per tile.*

7. *Interlocking clay or concrete tile shall have a minimum of one nail near center of head or two wire ties per tile.*

1513.5 ***~~1512.5~~*** ***Slate shingles.*** *Slate shingles on roofs with slopes exceeding 24 units vertical in 12 units horizontal (200 percent slope) shall be attached as required for veneer in accordance with Chapter 14.*

(All existing amendments that are not revised above shall continue without any change)

Notation for [DSA-SS]
Authority: Education Code § 17310 and 81142, and H&S Code §16022.
Reference: Education Code §§ 17280 through 17317, and 81130 through 81147, and Health and Safety Code §§16000 through 16023.

Notation for [DSA-SS/CC]
Authority: Education Code § 81053.
Reference: Education Code §§ 81052, 81053, and 81130 through 81147.

CHAPTER 16

STRUCTURAL DESIGN

Adopt and/or codify chapter as amended below:

PROPOSED ADOPTION	DSA-SS	DSA-SS/CC	Comments
Adopt entire chapter without amendments			
Adopt entire chapter with amendments listed below		X	
Adopt only those sections listed below			
1601.1.1		X	
1601.1.2		X	
1601.1.3		X	
1601.1.4		X	
1601.2		X	
~~*1601.3*~~		~~X~~	
1616		X	

All existing California amendments that are not revised below shall continue without change.

SECTION 1601
GENERAL

1601.1 Scope. The provisions of this chapter shall govern the structural design of buildings, structures and portions thereof regulated by this code.

1601.1.1 Application. [DSA-SS/CC] *The scope of application of Chapter 16 is as follows:*

Community college buildings regulated by the Division of the State Architect-Structural Safety/Community Colleges (DSA-SS/CC), as listed in Section 1.9.2.2.

1601.1.2 Identification of amendments. [DSA-SS/CC]
Division of the State Architect-Structural Safety/Community Colleges (DSA-SS/CC) amendments appear in this chapter preceded with the appropriate acronym, as follows:

Division of the State Architect - Structural Safety/Community Colleges: ***[DSA-SS/CC]*** *- For community college buildings listed in Section 1.9.2.2*

1601.1.3 Reference to other chapters. [DSA-SS/CC]
Where reference within this chapter is made to sections in Chapters 17 and 18, the provisions in Chapters 17A and 18A respectively shall apply instead.

1601.1.4 Amendments. [DSA-SS/CC] *See Section 1616 for additional requirements.*

1601.2 Enforcement agency approval. [DSA-SS/CC] *In addition to requirements of the California Administrative Code and the California Building Code, any aspect of project design, construction, quality assurance or quality control programs for which this code requires approval by the Registered ~~d~~ Design ~~p~~ Professional (RDP), are also subject to approval by the enforcement agency.*

...

SECTION 1616
ADDITIONAL REQUIREMENTS FOR COMMUNITY COLLEGES [DSA-SS/CC]

1616.1 Construction documents.

1616.1.1 *Additional requirements for construction documents are included in Sections 4-210 and 4-317 of the California Administrative Code (Part 1, Title 24, C.C.R).*

1616.1.2 Connections. *Connections that resist design seismic forces shall be designed and detailed on the design drawings.*

1616.1.3 Construction procedures. *Where unusual erection or construction procedures are considered essential by the project structural engineer or architect in order to accomplish the intent of the design or influence the construction ~~design~~, such procedure shall be indicated on the plans or in the specifications.*

1616.2 General design requirements.

1616.2.1 Lateral load deflections.

1616.2.1.1 Horizontal diaphragms. *The maximum span-~~width~~ depth ratio for any roof or floor diaphragm consisting of steel and composite steel slab decking or concrete shall be based on ~~not exceed those given in Table 4.2.4 of AF & PA SDPWS for wood sheathed diaphragms. For other diaphragms,~~ test data and design calculations acceptable to the enforcement agency ~~shall be submitted and approved for span-width ratios~~.*

1616.2.1.2 Veneers. *The deflection shall not exceed l/600 for veneered walls, anchored veneers and adhered veneers over 1 inch (25 mm) thick, including the mortar backing.*

1616.2.1.3 Risk Category of buildings and other structures. *Risk Category IV includes structures as defined in the California Administrative Code, Section 4-207 and all structures required for their continuous operation or access/egress.*

1616.2.1.4 Analysis. *Structural analysis shall explicitly include consideration of stiffness of diaphragm in accordance with ASCE 7 Section 12.3.1. A diaphragm is rigid for the purpose of distribution of story shear and torsional moment where so indicated in Section 12.3.1 of ASCE 7.*

1616.2.2 Structural walls. *For anchorage of concrete or masonry walls to roof and floor diaphragms, the out-of plane strength design force shall not be less than 280 lb/linear ft (4.09 kN/m) of wall.*

1616.3 Load combinations.

1616.3.1 Stability. *When checking stability under the provisions of Section 1605.1.1 using allowable stress design, the factor of safety for soil bearing values shall not be less than the overstrength factor of the structures supported.*

1616.4 Roof dead loads. *The design dead load shall provide for the weight of at least one additional roof covering in addition to other applicable loadings if the new roof covering is permitted to be applied over the original roofing without its removal, in accordance with Section 1511. ~~1510~~.*

1616.5 Live loads.

1616.5.1 Modifications to Table 1607.1.

1616.5.1.1 Item 4. Assembly areas. *The following minimum loads for stage accessories apply:*

1. Gridirons and fly galleries: 75 pounds per square foot uniform live load.

2. Loft block wells: 250 pounds per lineal foot vertical load and lateral load.

3. Head block wells and sheave beams: 250 pounds per lineal foot vertical load and lateral load. Head block wells and sheave beams shall be designed for all tributary loft block well loads. Sheave blocks shall be designed with a safety factor of five.

4. Scenery beams where there is no gridiron: 300 pounds per lineal foot vertical load and lateral load.

5. Ceiling framing over stages shall be designed for a uniform live load of 20 pounds per square foot. For members supporting a tributary area of 200 square feet or more, this additional load may be reduced to 15 pounds per square foot (0.72 kN/m2).

1616.5.1.2 Item 24. Reviewing stands, grandstands and bleachers. *The minimum uniform live load for a press box floor or accessible roof with railing is 100 psf.*

1616.5.1.3 Item 35. Yards and terraces, pedestrians. *Item 35 applies to pedestrian bridges and walkways that are not subjected to uncontrolled vehicle access.*

1616.5.1.4 Item 36. Storage racks and wall-hung cabinets. *The minimum vertical design live load shall be as follows:*

Paper media:
12-inch-deep (305 mm) shelf - 33 pounds per lineal foot (482 N/m)
15-inch-deep (381 mm) shelf - 41 pounds per lineal foot (598 N/m), or 33 pounds per cubic foot (5183 N/m3) per total volume of the rack or cabinet, whichever is less.

Film media:
18-inch-deep (457 mm) shelf - 100 pounds per lineal foot (1459 N/m), or 50 pounds per cubic foot (7853 N/m3) per total volume of the rack or cabinet, whichever is less.

Other media:
20 pounds per cubic foot (311 N/m3) or 20 pounds per square foot (958 Pa), whichever is less, but not less than actual loads.

1616.5.2 Uncovered open-frame roof structures. *Uncovered open-frame roof structures shall be designed for a vertical live load of not less than 10 pounds per square foot (0.48 kN/m2) of the total area encompassed by the framework.*

1616.6 Determination of snow loads. *The ground snow load or the design snow load for roofs shall conform with the adopted ordinance of the city, county, or city and county in which the project site is located, and shall be approved by DSA.*

1616.7 Wind loads.

1616.7.1 Story drift for wind loads. *The calculated story drift due to wind pressures with ultimate design wind speed, Vult , shall not exceed 0.008 times the story height for buildings less than 65 feet (19,812 mm) in height or 0.007 times the story height for buildings 65 feet (19,812mm) or greater in height.*

Exception: *This story drift limit need not be applied for single-story open ~~structures~~ buildings in Risk Category I and II.*

1616.8 Establishment of flood hazard areas. *Flood hazard maps shall include, at a minimum, areas of special flood hazard as identified by the Federal Emergency Management Agency's Flood Insurance Study (FIS) adopted by the local authority having jurisdiction where the project is located, as amended or revised with the accompanying Flood Insurance Rate Map (FIRM) and Flood Boundary and Floodway Map (FBFM) and related supporting data along with any revisions thereto.*

1616.9 Earthquake loads.

1616.9.1 Seismic design category. *The seismic design category for a structure shall be determined in accordance with Section 1613.*

1616.9.2 Definitions. *In addition to the definitions in Section 1613.2, the following words and terms shall, for the purposes of this section, have the meanings shown herein.*

ACTIVE EARTHQUAKE FAULT. *A fault that has been the source of earthquakes or is recognized as a potential source of earthquakes, including those that have exhibited surface displacement within Holocene time (about 11,000 years) as determined by California Geological Survey (CGS) under the Alquist-Priolo Earthquake Fault Zoning Act, those included as type A or type B faults for the U.S. Geological Survey (USGS) National Seismic Hazard Maps, and faults considered to have been active in Holocene time by an authoritative source, federal, state or local governmental agency.*

~~***BASE.*** *The level at which the horizontal seismic ground motions are considered to be imparted to the structure or the level at which the structure as a dynamic vibrator is supported. This level does not necessarily coincide with the ground level.*~~

DISTANCE FROM AN ACTIVE EARTHQUAKE FAULT. *Distance measured from the nearest point of the building to the closest edge of an Alquist-Priolo Earthquake fault zone for an active fault, if such a map exists, or to the closest mapped splay of the fault.*

IRREGULAR STRUCTURE. *A structure designed as having one or more plan or vertical irregularities per ASCE 7 Section 12.3.*

~~***STRUCTURAL ELEMENTS.*** *Floor or roof diaphragms, decking, joists, slabs, beams, or girders, columns, bearing walls, retaining walls, masonry or concrete nonbearing walls exceeding one story in height, foundations, shear walls or other lateral force-resisting members, and any other elements necessary to the vertical and lateral strength or stability of either the building as a whole or any of its parts, including connection between such elements.*~~

1616.9.3 Mapped acceleration parameters. *Seismic Design Category shall be determined in accordance with Section 1613.3.5.*

1616.9.4 Determination of seismic design category. *Structures not assigned to Seismic Design Category E or F, in accordance with Section 1613.3, shall be assigned to Seismic Design Category D.*

1616.9.4.1 Alternative seismic design category determination. *The alternative Seismic Design Category determination procedure of Section 1613.3.5.1 is not permitted by DSA-SS/CC.*

1616.9.4.2 Simplified design procedure. *The simplified design procedure of Section 1613.3.5.2 is not permitted by DSA-SS/CC.*

~~***1616.9.5 Automatic sprinkler systems.*** *The allowable values for design of anchors, hangers, and bracing elements shall be determined in accordance with material chapters of this code in lieu of those in NFPA 13.*~~

1616.10 Modifications to ASCE 7. *The text of ASCE 7 shall be modified as indicated in Sections 1616.10.1 through 1616.10.24.*

1616.10.1 ASCE 7, Section 1.3. *Modify ASCE 7 Section 1.3 by adding Section 1.3.6 as follows:*

1.3.6 Structural design criteria. *Where design is based on ASCE 7 Chapters 16, 17, 18, or 31, the ground motion, wind tunnel design recommendations, analysis, and design methods, material assumptions, testing requirements, and acceptance criteria proposed*

by the engineer shall be submitted to the enforcement agency in the form of structural design criteria for approval.

Peer review requirements in ~~Section 3422 of this code~~ Section 322 of the California Existing Buildings Code shall apply to design reviews required by ASCE 7 Chapters 17 and 18.

1616.10.2 ASCE 7, Section 11.4.7. *Modify ASCE 7 Section 11.4.7 by adding the following:*

For buildings assigned to Seismic Design Category E and F, or when required by the building official, a ground motion hazard analysis shall be performed in accordance with ASCE 7 Chapter 21, as modified by Section 1803A.6 of this code.

1616.10.3 ASCE 7, Table 12.2-1. *Modify ASCE 7 Table 12.2-1 as follows:*

A. BEARING WALL SYSTEMS

17. Light-framed walls with shear panels of all other materials - Not permitted by DSA-SS/CC.

B. BUILDING FRAME SYSTEMS

24. Light-framed walls with shear panels of all other materials - Not permitted by DSA-SS/CC.

C. MOMENT RESISTING FRAME SYSTEMS

12. Cold-formed steel — special bolted moment frame - Not permitted by DSA-SS/CC.

Exception:

1) Systems listed in this section can be used as an alternative system when preapproved by the enforcement agency.

2) Rooftop or other supported structures not exceeding two stories in height and 10 percent of the total structure weight can use the systems in this section when designed as components per ASCE 7 Chapter 13.

3) Systems listed in this section can be used for seismically isolated buildings when permitted by Section 1613.4.1.

1616.10.4 ASCE 7, Section 12.2.3.1. *Replace ASCE 7 Section 12.2.3.1, Items 1 and 2 by the following:*

The value of the response modification coefficient, R, used for design at any story shall not exceed the lowest value of R that is used in the same direction at any story above that story. Likewise, the deflection amplification factor, C_d, and the system over strength factor, Ω_0, used for the design at any story shall not be less than the largest value of these factors that are used in the same direction at any story above that story.

1616.10.5 ASCE 7, Section 12.2.3.2. *Modify ASCE 7 Section 12.2.3.2 by adding the following additional requirements for a two stage equivalent lateral force procedure or modal response spectrum procedure:*

> *f. Where design of elements of the upper portion is governed by special seismic load combinations, the special loads shall be considered in the design of the lower portions.*

1616.10.6 ASCE 7, Section 12.2.5.6.1. *The exception in Item a is not permitted by DSA-SS/CC.*

1616.10.7 ASCE 7, Section 12.2.5.7.1. *The exception in Item a is not permitted by DSA-SS/CC.*

1616.10.8 ASCE 7, Section 12.2.5.7.2. *The exception in Item a is not permitted by DSA-SS/CC.*

1616.10.9 ASCE 7, Section 12.3.3.1. *Modify ASCE 7 Section 12.3.3.1 as follows:*

> ***12.3.3.1 Prohibited horizontal and vertical irregularities for Seismic Design Categories D through F.*** *Structures assigned to Seismic Design Category E or F having horizontal structural irregularity Type 1b of Table 12.3-1 or vertical structural irregularities Type 1b, 5a or 5b of Table 12.3-2 shall not be permitted. Structures assigned to Seismic Design Category D having vertical irregularity Type 1b or 5b of Table 12.3-2 shall not be permitted.*

1616.10.10 ASCE 7, Section 12.7.2. *Modify ASCE 7 Section 12.7.2 by adding Item 6 to read as follows:*

> *6. Where buildings provide lateral support for walls retaining earth, and the exterior grades on opposite sides of the building differ by more than 6 feet (1829 mm), the load combination of the seismic increment of earth pressure due to earthquake acting on the higher side, as determined by a Geotechnical engineer qualified in soils engineering, plus the difference in earth pressures shall be added to the lateral forces provided in this section.*

1616.10.11 ASCE 7, Section 12.8.1.3. *Replace ASCE 7 Section 12.8.1.3 by the following:*

> ~~***12.8.1.3 Maximum Ss value in determination of Cs.*** *For regular structures five stories or less above the base, as defined in Section 11.2 and with a period, T, of 0.5 s or less, CS is permitted to be calculated using the larger of either SS =1.5 or 80 percent of the value of SS determined per Section 11.4.1 or 11.4.7.*~~
>
> ***12.8.1.3 Maximum S_{DS} Value in Determination of C_s and E_v***
> *The value of Cs and E_v are permitted to be calculated using a value of S_{DS} equal to 1.0, but not less than 70% of S_{DS} as defined in Section 11.4.4, provided that all of the following criteria are met:*
>
> 1. *The structure does not have irregularities, as defined in Section 12.3.2;*
> 2. *The structure does not exceed five stories above the base as defined in Section 11.2;*
> 3. *The structure has a fundamental period, T, that does not exceed 0.5 seconds, as determined using Section 12.8.2;*

4. *The structure meets the requirements necessary for the redundancy factor, ρ, to be permitted to be taken as 1.0, in accordance with Section 12.3.4.2;*
5. *The site soil properties are not classified as Site Class E or F, as defined in Section 11.4.2; and*
6. *The structure is classified as Risk Category I or II, as defined in Section 1.5.1.*

1616.10.12 ASCE 7, Section 12.9.4. *Replace ASCE 7 Section 12.9.4 as follows:*

> ***12.9.4 Scaling design values of combined response.*** *Modal base shears used to determine forces and drifts shall not be less than the base shear calculated using the equivalent lateral force procedure of Section 12.8.*

1616.10.13 ASCE 7, Section 12.10.2.1. *Replace ASCE 7 Exception 1 of Section 12.10.2.1 by the following:*

> ***Exception:*** *The forces calculated above need not exceed those calculated using the load combinations of Section 12.4.3.2 with seismic forces determined by Equation 12.10-3 and transfer forces, where applicable.*

1616.10.14 ASCE 7, Section 12.13.1. *Modify ASCE 7 Section 12.13.1 by adding Section 12.13.1.1 as follows:*

> ***12.13.1.1 Foundations and superstructure-to-foundation connections.*** *The foundation shall be capable of transmitting the design base shear and the overturning forces from the structure into the supporting soil. Stability against overturning and sliding shall be in accordance with Section 1605.1.1.*
>
> *In addition, the foundation and the connection of the superstructure elements to the foundation shall have the strength to resist, in addition to gravity loads, the lesser of the following seismic loads:*
>
> *1. The strength of the superstructure elements*
>
> *2. The maximum forces that ~~would occur~~ can be delivered to the foundation in ~~the~~ a fully yielded structural system*
>
> *3. Forces from the Load Combinations with overstrength factor in accordance with ASCE 7 Section 12.4.3.2*
>
> ***Exceptions:***
>
> *1. Where referenced standards specify the use of higher design loads.*
>
> *2. When it can be demonstrated that inelastic deformation of the foundation and superstructure-to-foundation connection will not result in a weak story or cause collapse of the structure.*

3. Where ~~basic structural system~~ seismic force-resisting system consists of light-framed walls with shear panels, unless the reference standard specifies the use of higher design loads.

Where the computation of the seismic overturning moment is by the equivalent lateral-force method or the modal analysis method, reduction in overturning moment permitted by Section 12.13.4 of ASCE 7 may be used.

Where moment resistance is assumed at the base of the superstructure elements, the rotation and flexural deformation of the foundation as well as deformation of the superstructure-to-foundation connection shall be considered in the drift and deformation compatibility analyses.

1616.10.15 ASCE 7, Section 13.1.4. *Replace ASCE 7 Section 13.1.4 by the following:*

13.1.4 Exemptions. *The following nonstructural components are exempt from the requirements of this section:*

1. Furniture (except storage cabinets as noted in Table 13.5-1).

2. Temporary or moveable (mobile) equipment.

Exceptions:

1) Equipment shall be anchored if it is permanently attached to the building utility services such as electricity, gas, or water. For the purposes of this requirement, "permanently attached" shall include all electrical connections except plugs for duplex receptacles.

2) The enforcement agency shall be permitted to require temporary attachments for movable equipment which is usually stationed in one place and heavier than 400 pounds or has a center of mass located 4 feet (1.22 m) or more above the adjacent floor or roof level that directly support the component, when they are not in use for a period longer than 8 hours at a time.

3. Mechanical and electrical components in Seismic Design Categories D, E or F where all of the following apply:

a. The component is positively attached to the structure;

b. Flexible connections are provided at seismic separation joints and between the component and associated ductwork, piping and conduit; and either:

i. The component weighs 400 lb (1780N) or less and has a center of mass located 4 ft. (1.22 m) or less above the adjacent floor or roof level;

Exception: *Special Seismic Certification requirements of this code in accordance with Section 1705A.12.3 shall be applicable.*

Or

ii. The component weighs 20 lb (89 N) or less or, in the case of a distributed system, 5 lb/ft (73 N/m) or less.

Exception: *The enforcement agency shall be permitted to require attachments for equipment with hazardous contents to be shown on construction documents irrespective of weight.*

1616.10.16 ASCE 7, Section 13.5.6. *Replace ASCE 7, Section 13.5.6 by the following:*

13.5.6 Suspended ceilings. *Suspended ceilings shall be in accordance with this section.*

13.5.6.1 Seismic forces. *The weight of the ceiling, Wp, shall include the ceiling grid; ceiling tiles or panels; light fixtures if attached to, clipped to, or laterally supported by the ceiling grid; and other components that are laterally supported by the ceiling. Wp shall be taken as not less than 4 psf (19 N/m2).*

The seismic force, Fp, shall be transmitted through the ceiling attachments to the building structural elements or the ceiling-structure boundary.

13.5.6.2 Industry standard construction for acoustical tile or lay-in panel ceilings. *Unless designed in accordance with ASTM E 580 Section 5.2.8, or seismically qualified in accordance with Sections 13.2.5 or 13.2.6, acoustical tile or lay-in panel ceilings shall be designed and constructed in accordance with this section.*

13.5.6.2.1 Seismic Design Categories D through F. *Acoustical tile or lay-in panel ceilings in Seismic Design Categories D, E and F shall be designed and installed in accordance with ASTM C 635, ASTM C 636, and ASTM E 580, Section 5 - Seismic Design Categories D, E and F as modified by this section.*

Exception to Section 13.5.8.1 shall not be used in accordance with ASTM E 580 Section 5.5.

13.5.6.2.2 Modification to ASTM E 580. *Modify ASTM E 580 by the following:*

*1. **Exitways.** Lay-in ceiling assemblies in exitways of hospitals and essential services buildings shall be installed with a main runner or cross runner surrounding all sides of each piece of tile, board or panel and each light fixture or grille. A cross runner that supports another cross runner shall be considered as a main runner for the purpose of structural classification. Splices or intersections of such runners shall be attached with through connectors such as pop rivets, screws, pins, plates with end tabs or other approved connectors. Lateral force diagonal bracing may be omitted in the short or transverse direction of exitways, not exceeding 8 feet wide, when perimeter support in accordance with ASTM E 580 Sections 5.2.2 and 5.2.3 is provided and the perimeter wall laterally supporting the ceiling in the short or transverse direction is designed to carry the ceiling lateral forces. The connections between the ceiling grid, wall angle and the wall shall be designed to resist the ceiling lateral forces.*

*2. **Corridors and lobbies.** Expansion joints shall be provided in the ceiling at intersections of corridors and at junctions of corridors and lobbies or other similar areas.*

*3. **Lay-in panels.** Metal panels and panels weighing more than 1/2 pounds per square foot (24 N/m2) other than acoustical tiles shall be positively attached to the ceiling suspension runners.*

*4. **Lateral force bracing.** Lateral force bracing is required for all ceiling areas except that they shall be permitted to be omitted in rooms with floor areas up to 144 square feet when perimeter support in accordance with ASTM E 580 Sections 5.2.2 and 5.2.3 are provided and perimeter walls are designed to carry the ceiling lateral forces. The connections between the ceiling grid, wall angle and the wall shall be designed to resist the ceiling lateral forces. Horizontal restraint point spacing shall be justified by analysis or test and shall not exceed a spacing of 12 feet by 12 feet. ~~Restraint~~ Bracing wires shall be secured with four tight twists in 11/2 inches, or an approved alternate connection.*

5. Ceiling support and bracing wires shall be spaced a minimum of 6" from all pipes, ducts, conduits and equipment that are not braced for horizontal forces, unless approved otherwise by the building official.

~~*5. **Ceiling fixtures.** Fixtures installed in acoustical tile or lay-in panel ceilings shall be mounted in a manner that will not compromise ceiling performance.*~~

~~*All recessed or drop-in light fixtures and grilles shall be supported directly from the fixture housing to the structure above with a minimum of two 12-gage wires located at diagonally opposite corners. Leveling and positioning of fixtures may be provided by the ceiling grid. Fixture support wires may be slightly loose to allow the fixture to seat in the grid system. Fixtures shall not be supported from main runners or cross runners if the weight of the fixtures causes the total dead load to exceed the deflection capability of the ceiling suspension system.*~~

~~*Fixtures shall not be installed so that the main runners or cross runners will be eccentrically loaded.*~~

~~*Surface-mounted fixtures shall be attached to the main runner with at least two positive clamping devices made of material with a minimum of 14 gage. Rotational spring catches do not comply. A 12-gage suspension wire shall be attached to each clamping device and to the structure above.*~~

~~*6.* **Partitions.** *Where the suspended ceiling system is required to provide lateral support for the permanent or relocatable partitions, the connection of the partition to the ceiling system, the ceiling system members and their connections, and the lateral force bracing shall be designed to support the reaction force of the partition from prescribed loads applied perpendicular to the face of the partition. Partition connectors, the suspended ceiling system and the lateral force bracing shall all be engineered to suit the individual partition application and shall be shown or defined in the drawings or specifications.*~~

1616.10.17 ASCE 7, Section 13.6.5. *Modify ASCE 7, Section 13.6.5.6, Exceptions 1 and 2, as follows:*

Exceptions:

1. Design for the seismic forces of Section 13.3 shall not be required for raceways where either:

a. Trapeze assemblies are used to support raceways and the total weight of the raceway supported by trapeze assemblies is less than 10lb/ft (146 N/m), or

b. The raceway is supported by hangers and each hanger in the raceway run is 12 in. (305mm) or less in length from the raceway support point to the supporting structure. Where rod hangers are used, they shall be equipped with swivels to prevent inelastic bending in the rod.

2. Design for the seismic forces of Section 13.3 shall not be required for conduit, regardless of the value of Ip, where the conduit is less than 2.5 in. (64 mm) trade size.

1616.10.18 ASCE 7, Section 13.6.7. *Replace ASCE 7, Section 13.6.7, Exceptions 1 and 2, by the following:*

Exceptions:

The following exceptions pertain to ductwork not designed to carry toxic, highly toxic or flammable gases, or used for smoke control:

1. Design for the seismic forces of Section 13.3 shall not be required for ductwork where either:

a. Trapeze assemblies are used to support ductwork and the total weight of the ductwork supported by trapeze assemblies is less than 10 lb/ft (146 N/m); or

b. The ductwork is supported by hangers and each hanger in the duct run is 12 in. (305 mm) or less in length from the duct support point to the supporting structure. Where rod hangers are used, they shall be equipped with swivels to prevent inelastic bending in the rod.

2. Design for the seismic forces of Section 13.3 shall not be required where provisions are made to avoid impact with larger ducts or mechanical components or to protect the ducts in the event of such impact; and HVAC ducts have a cross-sectional area of 6 ft2 (0.557 m2) or less, or weigh 10 lb/ft (146 N/m) or less.

~~***1616.10.19 ASCE 7, Section 13.6.8.*** *Modify ASCE 7, Section 13.6.8.2 by adding exception as follows:*~~

~~***Exception:*** *Anchor capacities shall be determined in accordance with material chapters of this code in lieu of using those in NFPA 13 and demand shall be based on ASCE 7.*~~

1616.10.19 ~~***1616.10.20***~~ ***ASCE 7, Section 13.6.8.3.*** *Replace ASCE 7, Section 13.6.8.3 with the following:*

13.6.8.3 Exceptions. *Design of piping systems and attachments for the seismic forces of Section 13.3 shall not be required where one of the following conditions apply:*

1. Trapeze assemblies are used to support piping whereby no single pipe exceeds the limits set forth in 3a. or b. below and the total weight of the piping supported by the trapeze assemblies is less than 10 lb/ft (146 N/m).

2. The piping is supported by hangers and each hanger in the piping run is 12 in. (305 mm) or less in length from the top of the pipe to the supporting structure. Where pipes are supported on a trapeze, the trapeze shall be supported by hangers having a length of 12 in. (305 mm) or less. Where rod hangers are used, they shall be equipped with swivels, eye nuts or other devices to prevent bending in the rod.

3. Piping having an Rp in Table 13.6-1 of 4.5 or greater is used and provisions are made to avoid impact with other structural or nonstructural components or to protect the piping in the event of such impact and where the following size requirements are satisfied:

a. For Seismic Design Categories D, E or F and values of Ip greater than one, the nominal pipe size shall be 1 inch (25 mm) or less.

b. For Seismic Design Categories D, E or F where Ip = 1.0 the nominal pipe size shall be 3 inches (80 mm) or less.

The exceptions above shall not apply to elevator piping.

1616.10.20 ~~***1616.10.21***~~ ***ASCE 7, Section 13.6.10.1.*** *Modify ASCE 7 Section 13.6.10.1 by adding Section 13.6.10.1.1, as follows:*

13.6.10.1.1 Elevators guide rail support. *The design of guide rail support bracket fastenings and the supporting structural framing shall use the weight of the counterweight or maximum weight of the car plus not more than 40 percent of its rated load. The seismic forces shall be assumed to be distributed one-third to the top guiding members and two-thirds to the bottom guiding members of cars and counterweights, unless other substantiating data are provided. In addition to the requirements of ASCE 7 Section 13.6.10.1, the minimum seismic forces shall be 0.5g acting in any horizontal direction.*

1616.10.21 ~~***1616.10.22***~~ ***ASCE 7, Section 13.6.10.4.*** *Replace ASCE 7 Section 13.6.10.4, as follows:*

13.6.10.4 Retainer plates. *Retainer plates are required at the top and bottom of the car and counterweight, except where safety devices acceptable to the enforcement agency are provided which meet all requirements of the retainer plates, including full engagement of the machined portion of the rail. The design of the car, cab stabilizers, counterweight guide rails and counterweight frames for seismic forces shall be based on the following requirements:*

1. The seismic force shall be computed per the requirements of ASCE 7 Section 13.6.10.1. The minimum horizontal acceleration shall be 0.5g for all buildings.

2. Wp shall equal the weight of the counterweight or the maximum weight of the car plus not less than 40 percent of its rated load.

3. With the car or counterweight located in the most adverse position, the stress in the rail shall not exceed the limitations specified in these regulations, nor shall the deflection of the rail relative to its supports exceed the deflection listed below:

TABLE 1224.4.11
ACCEPTABLE CEILING AND CARPET LOCATIONS

RAIL SIZE (weight per foot of length, pounds)	WIDTH OF MACHINED SURFACE (inches)	ALLOWABLE RAIL DEFLECTION (inches)
8	$1^{1}/_{4}$	0.20
11	$1^{1}/_{2}$	0.30
12	$1^{3}/_{4}$	0.40
15	$1^{31}/_{32}$	0.50

$18^1/_2$	$1^{31}/_{32}$	0.50
$22^1/_2$	2	0.50
30	$2^1/_4$	0.50

For SI: 1 inch = 25 mm, 1 foot = 305 mm, 1 pound = 0.454 kg.
Note: Deflection limitations are given to maintain a consistent factor of safety against disengagement of retainer plates from the guide rails during an earthquake.

4. Where guide rails are continuous over supports and rail joints are within 2 feet (610 mm) of their supporting brackets, a simple span may be assumed.

5. The use of spreader brackets is allowed.

6. Cab stabilizers and counterweight frames shall be designed to withstand computed lateral load with a minimum horizontal acceleration of 0.5g.

1616.10.22 ***~~1616.10.23~~*** ***ASCE 7, Section 16.1.4.*** *Remove ASCE 7 Sections 16.1.4.1 and 16.1.4.2 and modify 16.1.4 by the following:*

Maximum scaled base shears used to determine forces and drifts shall not be less than the base shear calculated using the equivalent lateral force procedure of Section 12.8.

1616.10.23 ***~~1616.10.24~~*** ***ASCE 7, Section 16.2.4.*** *Modify ASCE 7 Section 16.2.4 by the following:*
a) Where site is located within 3.1 miles (5 km) of an active fault at least seven ground motions shall be analyzed and response parameters shall be based on larger of the average of the maximum response with ground motions applied as follows:

1. Each of the ground motions shall have their maximum component at the fundamental period aligned in one direction.

2. Each of the ground motion's maximum component shall be rotated orthogonal to the previous analysis direction.

b) Where site is located more than 3.1 miles (5 km) from an active fault at least 10 ground motions shall be analyzed. The ground motions shall be applied such that one-half shall have their maximum component aligned in one direction and the other half aligned in the orthogonal direction. The average of the maximum response of all the analyses shall be used for design.

~~1616.10.25 ASCE 7, Section 17.2.1.~~ *~~Modify ASCE 7 Section 17.2.1 by adding the following:~~*

~~The importance factor, Ip , for parts and portions of a seismically isolated building shall be the same as that required for a fixed-base building of the same risk category.~~

1616.10.24 ***~~1616.10.26~~*** ***ASCE 7 Section 17.2.4.7.*** *Modify ASCE 7 Section 17.2.4.7 by adding the following to the end of the section:*

The effects of uplift ~~and/or rocking~~ shall be explicitly accounted for ~~in the analysis and~~ in the testing of the isolator units.

~~***1616.10.27 ASCE 7, Section 17.2.5.2.*** *Modify ASCE 7, Section 17.2.5.2 by adding the following:*~~

~~*The separation requirements for the building above the isolation system and adjacent buildings shall be the sum of the factored displacements for each building. The factors to be used in determining separations shall be:*~~

~~*1. For seismically isolated buildings, the deformation resulting from the analyses using the maximum considered earthquake unmodified by RI.*~~

~~*2. For fixed based buildings, Cd times the elastic deformations resulting from an equivalent static analysis using the seismic base shear computed via ASCE 7 Section 12.8.*~~

Notation for [DSA-SS/CC]
Authority: Education Code § 81053.
Reference: Education Code §§ 81052, 81053, and 81130 through 81147.

CHAPTER 16*A*

STRUCTURAL DESIGN

Adopt and/or codify chapter as amended below:

PROPOSED ADOPTION	DSA-SS	DSA-SS/CC	Comments
Adopt entire chapter without amendments			
Adopt entire chapter as amended	X	-	
Adopt only those sections listed below			

All existing California amendments that are not revised below shall continue without change.

SECTION 1601*A*

GENERAL

1601*A*.1 Scope. The provisions of this chapter shall govern the structural design of buildings, structures and portions thereof regulated by this code.

1601A.1.1 Application. *The scope of application of Chapter 16A is as follows:*

1. *Applications listed in Section 1.9.2.1, regulated by the Division of the State Architect-Structural Safety (DSASS).These applications include public elementary and secondary schools, community colleges and state-owned or state-leased essential services buildings.*

2. *[Reserved for OSHPD]*

Exception: *[Reserved for OSHPD]*

1601A.1.2 Amendments in this chapter. *DSA-SS adopt this chapter and all amendments.*

Exception: *Amendments adopted by only one agency appear in this chapter preceded with the appropriate acronym of the adopting agency, as follows:*

1. *Division of the State Architect-Structural Safety:* ***[DSA-SS]*** *– For applications listed in Section 1.9.2.1.*

2. *[Reserved for OSHPD]*

1601A.2 Enforcement Agency Approval. *In addition to requirements of the California Administrative Code and the California Building Code, any aspect of project design, construction, quality assurance, or quality control programs for which this code requires approval by the Registered ~~d~~ Design ~~p~~ Professional (RDP), are also subject to approval by the enforcement agency.*

SECTION 1602A
DEFINITIONS AND NOTATIONS

1602A.1 Definitions. The following terms are defined in Chapter 2 *except those defined below which shall, for the purposes of this section, have the meanings shown herein.*

...

~~***HOSPITAL BUILDING.*** *Any building defined in Section 129725, Health and Safety Code.*~~

...

SECTION 1603*A*
CONSTRUCTION DOCUMENTS

1603*A*.1 General. Construction documents shall show the size, section and relative locations of structural members with floor levels, column centers and offsets dimensioned. The design loads and other information pertinent to the structural design required by Sections 1603A.1.1 through ~~1603.1.8~~ *1603A.1.9* shall be indicated on the *construction documents.*

...

[DSA-SS] *Additional requirements are included in Section 4-210 and 4-317 of the California Administrative Code (Part 1,Title 24, C.C.R).*

~~(Reserved for OSHPD)~~

...

1603*A*.1.5 Earthquake design data. The following information related to seismic loads shall be shown, regardless of whether seismic loads govern the design of the lateral-force-resisting system of the building:

1. Risk Category
2. Seismic importance factor, I_e..
3. Mapped spectral response accelerations, S_S and S_1.
4. Site class.
5. Design spectral response acceleration parameters, S_{DS} and S_{D1}.
6. Seismic design category.
7. Basic seismic-force-resisting system(s).
8. Design base shear.
9. Seismic response coefficient(s), C_S.
10. Response modification factor(s), R.
11. Analysis procedure used.
12. *Applicable horizontal structural irregularities.*
13. *Applicable vertical structural irregularities.*

14. Location of base as defined in Section 1613A.2.

1603A.1.5.1 Connections. *Connections that resist design seismic forces shall be designed and detailed on the design drawings.*

...

1603A.1.9 ~~1603A.1.10~~ Construction Procedures. *Where unusual erection or construction procedures are considered essential by the Registered Design Professional (RDP) in order to accomplish the intent of the design or influence the construction ~~design~~, such procedure shall be indicated on the construction documents.*

1603A.2 Site Data Reports. *Geotechnical and Geohazard reports for review by the enforcement agency shall be accompanied by a description of the project prepared by the Registered Design Professional (RDP) in responsible charge, which shall include the following:*

1. *Type of service such as General Acute Care Facility, Skilled Nursing Facility, Intermediate Care Facility, Acute Psychiatric Facility, Central Utility Plants, K-12 school, community college, essential service, etc.*
2. *Construction materials used for the project such as Steel, Concrete. Masonry, Wood, etc.*
3. *Type of construction project such as new, addition, alteration, repair, etc.*
4. *For existing buildings, extent of construction such as incidental, minor, major, and/or voluntary seismic improvements as defined in Section 318, Part 10, Title 24, C.C.R ~~3418~~* ***[DSA-SS]*** *Sections 202 and 3402A* ***[OSHPD 1 & 4].***
5. *Seismic Force Resisting System used for each structure in the project.*
6. *Foundation system that will be used for each structure in the project such as spread footing, drilled piers, etc.*
7. *Analysis procedure used and basis of design such as ASCE 7 Equivalent Lateral Force Procedure, ASCE 41 Nonlinear Dynamic Procedure, etc.*
8. *Building characteristics such as number of stories above and below grade, foot print area at grade, grade slope on site, etc.*
9. *Special features such as requirement for shoring, underpinning, retaining walls, etc.*

1603A.3 Structural Design Basis and Calculations. *The application for the approval of construction documents that involves structural elements or components shall be accompanied by complete and*

accurate structural design computations, which shall comply with requirements prescribed by the enforcement agency:

1. *The computations shall be preceded by a detailed index.*
2. *The computations including each major subsection shall be prefaced by a statement clearly and concisely outlining the basis for the structural design and indicating the manner in which the structure will resist the vertical loads and lateral forces.*
3. *The computations shall be sufficiently complete to the extent that calculations for the individual structural members and connections can be readily interpreted.*

SECTION 1604*A*
GENERAL DESIGN REQUIREMENTS

...

1604*A*.3 Serviceability. Structural systems and members thereof shall be designed to have adequate stiffness to limit deflections and lateral drift. See Section 12.12.1 of ASCE 7 for drift limits applicable to earthquake loading.

1604*A*.3.1 Deflections. The deflections of structural members shall not exceed the more restrictive of the limitations of Sections 1604*A*.3.2 through *1604A.3.6* or that permitted by Table 1604*A*.3.

TABLE 1604*A*.3 - DEFLECTION LIMITS[a, b, c, h, i]

CONSTRUCTION	*L* or L_r	*S* or *W*[f]	*D* + (*L* or L_r)[d,g]
...	...	...	...
...	...	...	...
Veneered walls, anchored veneers and adhered veneers over 1 inch (25 mm) thick,	—	*l/600*	—

including the mortar backing			
Farm buildings	—	—	*l*/180
Greenhouses	—	—	*l*/120

...

1604A.3.7 Horizontal diaphragms. *The maximum span-~~width~~ depth ratio for any roof or floor diaphragm consisting of steel and composite steel slab decking shall not exceed those given in ~~Table 4.2.4 of AF & PA SDPWS for wood or maximum span-depth ratio given in~~ Table 1604A.4 ~~for steel and composite steel slab decking~~, unless test data and design calculations acceptable to the enforcement agency are submitted and approved for the use of other ~~span-width or~~ span-depth ratios. Concrete diaphragms shall not exceed the span- depth ratios for the equivalent composite steel-slab diaphragm in Table 1604A.4.*

TABLE 1604A.4 – MAXIMUM HORIZONTAL DIAPHRAGM SPAN AND SPAN-DEPTH RATIOS[1,3,4]

FLEXIBILITY FACTOR(F)[2]	***MAXIMUM DIAPHRAGM SPAN FOR MASONRY OR CONCRETE WALLS (feet)***	***DIAPHRAGM SPAN-DEPTH LIMITATION***			
		Rotation (torsion) Not Considered in Diaphragm		***Rotation (torsion) Considered in Diaphragm***	
		Masonry or Concrete Walls	***Flexible Walls***	***Masonry or Concrete Walls***	***Flexible Walls***
More than 150	*Not to be used*	*Not to be used*	*2:1*	*Not to be used*	*1-1/2:1*
70-150	*200*	*2:1 or as required for deflection*	*3:1*	*Not to be used*	*2:1*
10-70	*400*	*2-1/2:1 or as required for deflection*	*4:1*	*As required for deflection*	*2-1/2:1*
1-10	*No limitation*	*3:1 or as required for deflection*	*5:1*	*As required for deflection*	*3:1*

Less than 1	*No limitation*	*As required for deflection*	*No limitation*	*As required for deflection*	*3-1/2:1*

For SI: 1 inch = 25.4 mm, 1 foot = 304.8 mm, 1 plf = 14.6 N/m, 1 psi = 6894 Pa

[1] Diaphragms shall satisfy span-depth limitations based on flexibility.

[2] Flexibility Factor (F) is the average deflection in micro inches (10^{-6}) or μm of the diaphragm web per foot (m) of span stressed with a shear of 1 pound per foot (N/m).

[3] The total deflection Δ of the diaphragm may be computed from the equation: $\Delta = \Delta_f + \Delta_w$.

Where:

Δ_f = Flexural deflection of the diaphragm determined in the same manner as the deflection of beams. The flexural stiffness of the web of diaphragms consisting of bare steel decking shall be neglected.

Δ_w = Web deflection of the diaphragm may be determined solving the following equation:

$$F = \frac{\Delta_w x 10^6}{q_{ave} L}$$

Where:

L = Distance in feet (m) between the vertical resisting element (such as a shear wall) and the point to which the deflection is to be determined.

q_{ave} = Average shear in the diaphragm in pounds per foot (N/m) over length L.

[4] When applying these limitations to cantilevered diaphragms, the allowable span-depth ratio will be half of that shown.

1604A.3.8 Deflections. *Deflection criteria for materials not specified shall be developed by the project architect or structural engineer in a manner consistent with the provisions of this section and approved by the enforcement agency.*

1604A.4 Analysis. Load effects on structural members and their connections shall be determined by methods of structural analysis that take into account equilibrium, general stability, geometric compatibility and both short- and long-term material properties.

Members that tend to accumulate residual deformations under repeated service loads shall have included in their analysis the added eccentricities expected to occur during their service life.

Any system or method of construction to be used shall be based on a rational analysis in accordance with well-established principles of mechanics. Such analysis shall result in a system that provides a complete load path capable of transferring loads from their point of origin to the load-resisting elements.

The total lateral force shall be distributed to the various vertical elements of the lateral force-resisting system in proportion to their rigidities, considering the rigidity of the horizontal bracing system or diaphragm. Rigid elements assumed not to be a part of the lateral force-resisting system are permitted to be incorporated into buildings provided their effect on the action of the system is considered and provided for in the design. Structural analysis shall explicitly include consideration of stiffness of diaphragms in accordance with ASCE 7 Section 12.3.1. ~~A diaphragm is rigid for the purpose of distribution of story shear and torsional moment when the lateral deformation of the diaphragm is less than or equal to two times the average story drift.~~ Where required by ASCE 7, provisions shall be made for the increased forces induced on resisting elements of the structural system resulting from torsion due to eccentricity between the center of application of the lateral forces and the center of rigidity of the lateral force resisting system.

Every structure shall be designed to resist the overturning effects caused by the lateral forces specified in this chapter. See Section 1609 for wind loads, Section 1610 for lateral soil loads and Section 1613 for earthquake loads.

...

1604A.5 Risk category. Each building and structure shall be assigned a *risk category* in accordance with Table 1604A.5. Where a referenced standard specifies an occupancy category, the risk category shall not be taken as lower than the occupancy category specified therein. Where a referenced standard specifies that the assignment of a risk category be in
accordance with ASCE 7, Table 1.5-1, Table 1604.5 shall be used in lieu of ASCE 7, Table 1.5-1.

...

TABLE 1604A.5 - RISK CATEGORY OF BUILDINGS AND OTHER STRUCTURES

RISK CATEGORY	NATURE OF OCCUPANCY
...	...
III	Buildings and other structures that represent a substantial hazard to human life in the event of failure, including but not limited to: ... • ~~Group I-2 occupancies with an occupant load of 50 or more resident care recepients, but not having surgery or emergency treatment facilities.~~ ...
IV	Buildings and other structures designated as essential facilities, including but not limited to: • ~~Group I-2 occupancies having surgery or emergency treatment facilities.~~ ... • Designated emergency preparedness, communications and operations centers and other facilities required for emergency response~~.~~ ***[DSA-SS]*** *as defined in the California Administrative Code (Title 24, Part 1, CCR), Section 4-207 and all structures required for their continuous operation or access/egress.* ...

...

1604A.8.2 Structural walls. Walls that provide vertical load-bearing resistance or lateral shear resistance for a portion of the structure shall be anchored to the roof and to all floors and members that provide lateral support for the wall or that are supported by the wall. The connections shall be

capable of resisting the horizontal forces specified in Section 1.4.4 of ASCE 7 for walls of structures assigned to Seismic Design Category A and to Section 12.11 of ASCE 7 for walls of structures assigned to all other seismic design categories. *For anchorage of concrete or masonry walls to roof and floor diaphragms, the out-of-plane strength design force shall not be less than 280 lb/linear ft (4.09 kN/m) of wall.* Required anchors in masonry walls of hollow units or cavity walls shall be embedded in a reinforced grouted structural element of the wall. See Sections 1609*A* for wind design requirements and 1613*A* for earthquake design requirements.

...

SECTION 1605*A*
LOAD COMBINATIONS

1605*A*.1 General. Buildings and other structures and portions thereof shall be designed to resist:

...

1605*A*.1.1 Stability. Regardless of which load combinations are used to design for strength, where overall structure stability (such as stability against overturning, sliding, or buoyancy) is being verified, use of the load combinations specified in Section 1605*A*.2 or 1605*A*.3 shall be permitted. Where the load combinations specified in Section 1605*A*.2 are used, strength reduction factors applicable to soil resistance shall be provided by a *registered design professional.* The stability of retaining walls shall be verified in accordance with Section 1807*A*.2.3. *When using allowable stress design, factor of safety for soil bearing values shall not be less than the overstrength factor of the structures supported.*

...

SECTION 1606*A*
DEAD LOADS

...

1606A.3 Roof Dead Loads. *The design dead load shall provide for the weight of at least one additional roof covering in addition to other applicable loadings if the new roof covering is permitted to be applied over the original roofing without its removal, in accordance with Section 1511. ~~1510.~~*

...

SECTION 1607*A*
LIVE LOADS

...

1607*A*.1 General. Live loads are those loads defined in Chapter 2 of this code.

1607*A*.2 Loads not specified. For occupancies or uses not designated in Table 1607*A*.1, the live load shall be determined in accordance with a method approved by the building official.

1607*A*.3 Uniform live loads. The live loads used in the design of buildings and other structures shall be the maximum loads expected by the intended use or occupancy but shall in no case be less than the minimum uniformly distributed unit loads required by Table 1607*A*.1.

...

TABLE 1607*A*.1 - MINIMUM UNIFORMLY DISTRIBUTED LIVE LOADS AND MINIMUM CONCENTRATED LIVE LOADS[g]

OCCUPANCY OR USE	UNIFORM (psf)	CONCENTRATED (lbs.)
...	...	...
4. Assembly areas [o,q]		
Fixed seats (fastened to floor)	60 [m]	
Follow spot, projections and control rooms	50	
Lobbies	100 [m]	—
Movable seats	100 [m]	
Stage floors	150 [m]	
Platforms (assembly)	100 [m]	
Other assembly areas	100 [m]	
...	...	...
19. Libraries [n]		
Corridors above first floor	80	1,000
Reading rooms	60 [m]	1,000
Stack rooms	150 [b,m]	1,000
...	...	...
22. Office buildings [n]		
Corridors above first floor	80	2,000
File and computer rooms shall be designed for heavier loads based on anticipated occupancy	—	—
Lobbies and first-floor	100	2,000

corridors Offices	50	2,000
...	...	...
24. .... Reviewing stands, grandstands and bleachers [q] ...	100[c,m]	
...	...	...
27. Schools [n] Classrooms Corridors above first floor First-floor corridors	 40[p] 80 100	 1,000 1,000 1,000
...	...	...
35. Yards and terraces, pedestrians[r]	100[m]	—
36. Storage racks and wall-hung cabinets.	*Total Loads [n]*	—

...

n. The minimum vertical design live load shall be as follows:

Paper media:
12-inch-deep (305 mm) shelf 33 pounds per lineal foot (482 N/m)
15-inch-deep (381 mm) shelf 41 pounds per lineal foot (598 N/m), or
33 pounds per cubic foot (5183 N/m^3) per total volume of the rack or cabinet, whichever is less.

Film media:
18-inch-deep (457 mm) shelf 100 pounds per lineal foot (1459 N/m), or
50 pounds per cubic foot (7853 N/m^3) per total volume of the rack or cabinet, whichever is less.

Other media:
20 pounds per cubic foot (311 N/m^3) or 20 pounds per square foot (958 Pa), whichever is less, but not less than actual loads.

o. ***[DSA-SS]*** *The following minimum loads for stage accessories apply:*

1. Gridirons and fly galleries: 75 pounds per square foot uniform live load.

2. Loft block wells: 250 pounds per lineal foot vertical load and lateral load.

3. Head block wells and sheave beams: 250 pounds per lineal foot vertical load and lateral load. Head block wells and sheave beams shall be designed for all tributary loft block well loads. Sheave blocks shall be designed with a safety factor of five.

4. Scenery beams where there is no gridiron: 300 pounds per lineal foot vertical load and lateral load.

5. Ceiling framing over stages shall be designed for a uniform live load of 20 pounds per square foot. For members supporting a tributary area of 200 square feet or more, this additional load may be reduced to 15 pounds per square foot.

*p. **[DSA-SS]** The minimum uniform live load for classroom occupancies is 50 psf. Live load reduction is not permitted for classrooms classified as Group A occupancies unless specific exception of Section 1607A.10 apply.*

*q. **[DSA-SS]** The minimum uniform live load for a press box floor or accessible roof with railing is 100 psf.*

*r. **[DSA-SS]** Item 35 applies to pedestrian bridges and walkways that are not subjected to uncontrolled vehicle access.*

...

1607A.12.6 ~~***1607A.12.5***~~ ***Uncovered open-frame roof structures.*** *Uncovered open-frame roof structures shall be designed for a vertical live load of not less than 10 pounds per square foot (0.48 kN/m^2) of the total area encompassed by the framework.*

...

1607*A*.14 Interior walls and partitions. Interior walls and partitions that exceed 6 feet (1829 mm) in height, including their finish materials, shall have adequate strength and stiffness to resist the loads to which they are subjected but not less than a horizontal load of 5 psf (0.240 kN/m^2). *The 5 psf (0.24 kN/m^2)* ~~*working*~~ *service load need not be applied simultaneously with wind or seismic loads. The deflection of such walls under a load of 5 psf (0.24 kN/m^2) shall not exceed the limits in Table 1604A.3.*

...

SECTION 1608*A*
SNOW LOADS

1608*A*.2 Ground snow loads. The ground snow loads to be used in determining the design snow loads for roofs shall be determined in accordance with ASCE 7 or Figure 1608*A*.2 for the contiguous United States ~~and Table 1608.2 for Alaska~~. Site-specific case studies shall be made in areas designated "CS" in Figure 1608*A*.2. Ground snow loads for sites at elevations above the limits indicated in Figure 1608*A*.2 and for all sites within the CS areas shall be approved. Ground snow load determination for such sites shall be based on an extreme value statistical analysis of data available in the vicinity of the site using a value with a 2-percent annual probability of being exceeded (50-year mean recurrence interval). ~~Snow loads are zero for Hawaii, except in mountainous regions as approved by the building official.~~

~~TABLE 1608.2 - GROUND SNOW LOADS, pg , FOR ALASKAN LOCATIONS~~

~~LOCATION~~	~~POUNDS PER SQUARE FOOT~~	~~LOCATION~~	~~POUNDS PER SQUARE FOOT~~	~~LOCATION~~	~~POUNDS PER SQUARE FOOT~~
~~Adak~~	~~30~~	~~Galena~~	~~60~~	~~Petersburg~~	~~150~~
~~Anchorage~~	~~50~~	~~Gulkana~~	~~70~~	~~St. Paul Islands~~	~~40~~
~~Angoon~~	~~70~~	~~Homer~~	~~40~~	~~Seward~~	~~50~~
~~Barrow~~	~~25~~	~~Juneau~~	~~60~~	~~Shemya~~	~~25~~
~~Barter Island~~	~~35~~	~~Kenai~~	~~70~~	~~Sitka~~	~~50~~
~~Bethel~~	~~40~~	~~Kodiak~~	~~30~~	~~Talkeetna~~	~~120~~
~~Big Delta~~	~~50~~	~~Kotzebue~~	~~60~~	~~Unalakleet~~	~~50~~
~~Cold Bay~~	~~25~~	~~McGrath~~	~~70~~	~~Valdez~~	~~160~~
~~Cordova~~	~~100~~	~~Nenana~~	~~80~~	~~Whittier~~	~~300~~
~~Fairbanks~~	~~60~~	~~Nome~~	~~70~~	~~Wrangell~~	~~60~~
~~Fort Yukon~~	~~60~~	~~Palmer~~	~~50~~	~~Yakutat~~	~~150~~

~~For SI: 1 pound per square foot = 0.0479 kN/m2.~~

~~[FIGURE 1608A.2 - Not shown for Clarity]~~

...

1608A.4 Determination of snow loads. [DSA-SS] *The ground snow load or the design snow load for roofs shall conform with the adopted ordinance of the city, county, or city and county in which the project site is located, and shall be approved by DSA.*

SECTION 1609A
WIND LOADS

...

1609A.1.3 Story Drift for Wind Loads. *The calculated story drift due to wind pressures with ultimate design wind speed, V_{ult}, shall not exceed 0.008 times the story height for buildings less than 65 feet (19,812 mm) in height or 0.007 times the story height for buildings 65 feet (19,812 mm) or greater in height.*

Exception: ***[DSA-SS]*** *This story drift limit need not be applied for single-story open ~~structures~~ buildings in Risk Category I and II.*

...

SECTION 1612A
FLOOD LOADS

...

1612A.3 Establishment of flood hazard areas. To establish *flood hazard areas*, the applicable governing authority shall adopt a flood hazard map and supporting data. The flood hazard map shall include, at a minimum, areas of special flood hazard as identified by the Federal Emergency Management ~~Agency in an engineering report entitled "The Flood Insurance Study for [INSERT NAME OF JURISDICTION]," dated [INSERT DATE OF ISSUANCE],~~ *Agency's Flood Insurance Study (FIS) adopted by the local authority having jurisdiction where the project is located*, as amended or revised with the accompanying Flood Insurance Rate Map (FIRM) and Flood Boundary and Floodway Map (FBFM) and related supporting data along with any revisions thereto. The adopted flood hazard map and supporting data are hereby adopted by reference and declared to be part of this section.

...

SECTION 1613A
EARTHQUAKE LOADS

1613*A*.1 Scope. Every structure, and portion thereof, including nonstructural components that are permanently attached to structures and their supports and attachments, shall be designed and constructed to resist the effects of earthquake motions in accordance with ASCE 7 *with all the modifications incorporated herein*, excluding Chapter 14 and Appendix 11A. The seismic design category for a structure ~~is permitted to~~ *shall* be determined in accordance with Section 1613*A* ~~or ASCE 7~~.

Exceptions:

~~1. Detached one- and two-family dwellings, assigned to Seismic Design Category A, B or C, or located where the mapped short-period spectral response acceleration, SS, is less than 0.4 g.~~

~~2. The seismic-force-resisting system of wood-frame buildings that conform to the provisions of Section 2308 are not required to be analyzed as specified in this section.~~

~~3. Agricultural storage structures intended only for incidental human occupancy.~~

Structures that require special consideration of their response characteristics and environment that are not addressed by this code or ASCE 7 and for which other regulations provide seismic criteria, such as vehicular bridges, electrical transmission towers, hydraulic structures, buried utility lines and their appurtenances and nuclear reactors.

1613*A*.2 Definitions. The following terms are defined in Chapter 2 *except those defined below which shall, for the purposes of this section, have the meanings shown herein. Definition provided in* <u>*ASCE 7 Section 11.2 and*</u> ***[OSHPD 1 & 4]*** *Section 3402A.1* ~~*and ASCE 7 Section 11.2*~~ *shall apply when appropriate in addition to terms defined in this section.*

ACTIVE EARTHQUAKE FAULT. *A fault that has been the source of earthquakes or is recognized as a potential source of earthquakes, including those that have exhibited surface displacement within Holocene time (about 11,000 years) as determined by California Geological Survey (CGS) under the Alquist-Priolo Earthquake Fault Zoning Act, those included as type A or type B faults for the U.S. Geological Survey (USGS) National Seismic Hazard Maps, and faults considered to have been active in Holocene time by any authoritative source, Federal, State or Local Governmental Agency.*

BASE. ~~*The level at which the horizontal seismic ground motions are considered to be imparted to the structure or the level at which the structure as a dynamic vibrator is supported. This level does not*~~

~~*necessarily coincide with the ground level.*~~ *See ASCE 7.*

...

DISTANCE FROM AN ACTIVE EARTHQUAKE FAULT. *Distance measured from the nearest point of the building to the closest edge of an Alquist-Priolo Earthquake fault zone for an active fault, if such a map exists, or to the closest mapped splay of the fault.*

GENERAL ACUTE CARE HOSPITAL. *See Section 1224.3.*

~~***HOSPITAL BUILDINGS.*** *Hospital buildings and all other medical facilities as defined in Section 1250, Health and Safety Code.*~~

IRREGULAR STRUCTURE. *A structure designed as having one or more plan or vertical irregularities per ASCE 7 Section 12.3.*

...

~~***STRUCTURAL ELEMENTS.*** *Floor or roof diaphragms, decking, joists, slabs, beams, or girders, columns, bearing walls, retaining walls, masonry or concrete nonbearing walls exceeding one story in height, foundations, shear walls or other lateral-force resisting members, and any other elements necessary to the vertical and lateral strength or stability of either the building as a whole or any of its parts, including connection between such elements.*~~

...

1613*A*.3 Seismic ground motion values. Seismic ground motion values shall be determined in accordance with this section.

1613A.3.1 Mapped acceleration parameters. The parameters S_s and S_1 shall be determined from the 0.2 and 1-second spectral response accelerations shown on Figures 1613.3.1(1) through 1613.3.1(8). ~~Where S_1 is less than or equal to 0.04 and S_s is less than or equal to 0.15, the structure is permitted to be assigned to Seismic Design Category A.~~

~~(Figures 1613.3.1(1) through 1613.3.1(8) were stricken in the CBC 2013 and will not be shown in Chapter 16A. These figures are shown in Chapter 16)~~

...

1613*A*.3.5 Determination of seismic design category. Structures classified as Risk Category I, II or III that are located where the mapped spectral response acceleration parameter at 1-second period, S_1, is greater than or equal to 0.75 shall be assigned to Seismic Design Category E. Structures classified as Risk Category IV that are located where the mapped spectral response acceleration parameter at 1-second period, S_1, is greater than or equal to 0.75 shall be assigned to Seismic Design Category F. All other structures shall be assigned to *Seismic Design Category D.* ~~a seismic design category based on their occupancy category and the design spectral response acceleration coefficients, S_{DS} and S_{D1}, determined in accordance with Section 1613.5.4 or the site-specific procedures of ASCE 7. Each building and structure shall be assigned to the more severe seismic design category in accordance with Table 1613.5.6(1) or 1613.5.6(2), irrespective of the fundamental period of vibration of the structure, T.~~

~~**TABLE 1613.3.5(1) - SEISMIC DESIGN CATEGORY BASED ON SHORT-PERIOD (0.2 second) RESPONSE ACCELERATIONS**~~

~~VALUE OF S_{DS}~~	~~RISK CATEGORY~~		
	~~I or II~~	~~III~~	~~IV~~
~~$S_{DS} < 0.167g$~~	~~A~~	~~A~~	~~A~~
~~$0.167g \le S_{DS} < 0.33g$~~	~~B~~	~~B~~	~~C~~
~~$0.33g \le S_{DS} < 0.50g$~~	~~C~~	~~C~~	~~D~~
~~$0.50g \le S_{DS}$~~	~~D~~	~~D~~	~~D~~

~~**TABLE 1613.3.5(2) - SEISMIC DESIGN CATEGORY BASED ON 1-SECOND PERIOD RESPONSE ACCELERATION**~~

~~VALUE OF S_{D1}~~	~~RISK CATEGORY~~		
	~~I or II~~	~~III~~	~~IV~~
~~$S_{D1} < 0.067g$~~	~~A~~	~~A~~	~~A~~

~~$0.067g \leq S_{D1} < 0.133g$~~	~~B~~	~~B~~	~~C~~
~~$0.133g \leq S_{D1} < 0.20g$~~	~~C~~	~~C~~	~~D~~
~~$0.20g \leq S_{D1}$~~	~~D~~	~~D~~	~~D~~

1613*A*.3.5.1 Alternative seismic design category determination. *Not permitted by DSA-SS.* ~~Where S_1 is less than 0.75, the seismic design category is permitted to be determined from Table 1613.3.5(1) alone when all of the following apply:~~

~~1. In each of the two orthogonal directions, the approximate fundamental period of the structure, T_a, in each of the two orthogonal directions determined in accordance with Section 12.8.2.1 of ASCE 7, is less than 0.8 T_s determined in accordance with Section 11.4.5 of ASCE 7.~~

~~2. In each of the two orthogonal directions, the fundamental period of the structure used to calculate the story drift is less than T_s.~~

~~3. Equation 12.8-2 of ASCE 7 is used to determine the seismic response coefficient, C_s.~~

~~4. The diaphragms are rigid or are permitted to be idealized as rigid in accordance with Section 12.3.1 in ASCE 7 or for diaphragms permitted to be idealized as flexible in accordance with Section 12.3.1 of ASCE 7, the distance between vertical elements of the seismic-force-resisting system does not exceed 40 feet (12 192 mm).~~

1613*A*.3.5.2 Simplified design procedure. *Not permitted by DSA-SS.* ~~Where the alternate simplified design procedure of ASCE 7 is used, the seismic design category shall be determined in accordance with ASCE 7.~~

...

1613*A*.4.1 Additional seismic-force-resisting systems for seismically isolated structures. Add the following exception to the end of Section 17.5.4.2 of ASCE 7:

Exception: For isolated structures designed in accordance with this standard, the structural system limitations including the structural height limitations in Table 12.2-1 for ordinary steel concentrically braced frames (OCBFs) as defined in Chapter 11 and ~~ordinary~~ *intermediate*

moment frames ~~(OMFs)~~ *(IMFs)* as defined in Chapter 11 are permitted to be taken as 160 feet (48 768 mm) for structures assigned to Seismic Design Category D, E or F, provided that the following conditions are satisfied:

1. The value of R_1 as defined in Chapter 17 is taken as 1.

2. For ~~OMFs and~~ OCBFs, design is in accordance with AISC 341.

3. *For IMFs, design is in accordance with AISC 341. In addition, requirements of Section E3.6e of AISC 341 shall be satisfied.*

...

SECTION 1615*A*
STRUCTURAL INTEGRITY

1615*A*.1 General. High-rise buildings that are assigned to Risk Category III or IV shall comply with the requirements of this section. Frame structures shall comply with the requirements of Section 1615*A*.3. Bearing wall structures shall comply with the requirements of Section 1615*A*.4.

1615*A*.2 Definitions. The following words and terms are defined in Chapter 2 *except those defined below shall, for the purposes of this section, have the meanings shown herein.*

...

HIGH-RISE BUILDING. *A building with an occupied floor located more than 75 feet (22 860 mm) above the base.*

...

SECTION 1616A
MODIFICATIONS TO ASCE 7

1616A.1 General. *The text of ASCE 7 shall be modified as indicated in Sections 1616A.1.1 through 1616A.1.40 ~~1616A.1.42~~.*

1616A.1.1 ASCE 7, Section 1.3. *Modify ASCE 7 Section 1.3 by adding Section 1.3.6 as follows:*

1.3.6 Structural Design Criteria. *Where design is based on ASCE 7 Chapters 16, 17, or 18, ~~and 31,~~ the ground motion, ~~wind tunnel design recommendations,~~ analysis, and design methods, material assumptions, testing requirements, and acceptance criteria proposed by the engineer shall be submitted to the enforcement agency in the form of structural design criteria for approval. [redacted] **[DSA-SS]** Structural design criteria including wind tunnel design recommendations are required where design is based on ASCE 7 Chapter 31.*
[DSA-SS] *Peer review requirements in ~~Section 3414A of this code~~ Section 322 of the California Existing Buildings Code shall apply to design reviews required by ASCE 7 Chapters 17 and 18.*

1616A.1.2 ASCE 7, Section 11.1.3. *Replace last paragraph of ASCE 7 Section 11.1.3 by the following:*

Buildings shall be designed and detailed in accordance with Chapter 12.

1616A.1.3 ASCE 7, Section 11.4.7. *Modify ASCE 7 Section 11.4.7 by adding the following:*

For buildings assigned to Seismic Design Category E or F, or when required by the building official, a ground motion hazard analysis shall be performed in accordance with ASCE 7 Chapter 21 as modified by Section 1803A.6 of this code.

1616A.1.4 ASCE 7, Table 12.2 -1. *Modify ASCE 7 Table 12.2-1 as follows:*

A. BEARING WALL SYSTEMS

5. [redacted]

17. Light-framed walls with shear panels of all other materials – Not permitted by DSA-SS.

B. BUILDING FRAME SYSTEMS

3. [Reserved for OSHPD]

8. [Reserved for OSHPD]

24. Light-framed walls with shear panels of all other materials – Not permitted by DSA-SS.

26. [Reserved for OSHPD]

C. MOMENT RESISTING FRAME SYSTEMS

2. [Reserved for OSHPD].

3. [Reserved for OSHPD].

4. [Reserved for OSHPD].

12. ~~5.~~ Cold-formed steel –special bolted moment frame - Not permitted by DSA-SS.

Exception:

1) Systems listed in this section can be used as an alternative system when pre-approved by the enforcement agency.

2) Rooftop or other supported structures not exceeding two stories in height and 10 percent of the total structure weight can use the systems in this section when designed as components per ASCE 7 Chapter 13.

3) Systems listed in this section can be used for seismically isolated buildings when permitted by Section 1613A.4.1.

1616A.1.5 ASCE 7, Section 12.2.3.1. *Replace ASCE 7 Section 12.2.3.1 Items # 1 and # 2 by the following:*

The value of the response modification coefficient, R, used for design at any story shall not exceed the lowest value of R that is used in the same direction at any story above that story. Likewise, the deflection amplification factor, C_d, and the system over strength factor, Ω_0, used for the design at any story shall not be less than the largest values of these factors that are used in the same direction at any story above that story.

1616A.1.6 ASCE 7, Section 12.2.3.2. *Modify ASCE 7 Section 12.2.3.2 by adding the following additional requirement:*

f. Where design of elements of the upper portion is governed by special seismic load combinations, the special loads shall be considered in the design of the lower portion.

1616A.1.7 *ASCE 7, Section 12.2.5.6.1 [DSA-SS] The exception after the first paragraph is not permitted by DSA-SS.*

1616A.1.8 *ASCE 7, Section 12.2.5.7.1 [DSA-SS] The exception after the first paragraph is not permitted by DSA-SS.*

1616A.1.9 *ASCE 7, Section 12.2.5.7.2 [DSA-SS] The exception after the first paragraph is not permitted by DSA-SS.*

1616A.1.10 ASCE 7, Section 12.3.3. *Modify first sentence of ASCE 7 Section 12.3.3.1 as follows:*

12.3.3.1 Prohibited Horizontal and Vertical Irregularities for Seismic Design Categories D through F. *Structures assigned to Seismic Design Category D, E, or F having horizontal structural irregularity Type 1b of Table 12.3-1 or vertical structural irregularities Type 1b, 5a or 5b of Table 12.3-2 shall not be permitted.*

1616A.1.11 ASCE 7, Section 12.7.2. *Modify ASCE 7 Section 12.7.2 by adding item 6 to read as follows:*

6. Where buildings provide lateral support for walls retaining earth, and the exterior grades on opposite sides of the building differ by more than 6 feet (1829 mm), the load combination of the seismic increment of earth pressure due to earthquake acting on the higher side, as determined

by a Geotechnical engineer qualified in soils engineering plus the difference in earth pressures shall be added to the lateral forces provided in this section.

1616A.1.12 ASCE 7, Section 12.8.1.3. *Replace ASCE 7 Section 12.8.1.3 by the following:*

~~***12.8.1.3 Maximum S_s Value in Determination of C_s.*** *For regular structures five stories or less above the base as defined in Section 11.2 and with a period, T, of 0.5 s or less, C_S is permitted to be calculated using the larger of either S_S =1.5 or 80% of the value of S_S determined per Sections 11.4.1 or 11.4.7.*~~

12.8.1.3 Maximum S_{DS} Value in Determination of C_s and E_v
The value of Cs and E_v are permitted to be calculated using a value of S_{DS} equal to 1.0, but not less than 70% of S_{DS} as defined in Section 11.4.4, provided that all of the following criteria are met:

7. *The structure does not have irregularities, as defined in Section 12.3.2;*
8. *The structure does not exceed five stories above the base as defined in Section 11.2;*
9. *The structure has a fundamental period, T, that does not exceed 0.5 seconds, as determined using Section 12.8.2;*
10. *The structure meets the requirements necessary for the redundancy factor, ρ, to be permitted to be taken as 1.0, in accordance with Section 12.3.4.2;*
11. *The site soil properties are not classified as Site Class E or F, as defined in Section 11.4.2; and*
12. *The structure is classified as Risk Category I or II, as defined in Section 1.5.1.*

[Reserved for CSHCD]

1616A.1.13 ASCE 7, Section 12.9.4. *Replace ASCE 7 Section 12.9.4 as follows:*

12.9.4 Scaling Design Values of Combined Response. *Modal base shears used to determine forces and drifts shall not be less than the base shears calculated using the equivalent lateral force procedure of section 12.8.*

1616A.1.14 ASCE 7, Section 12.10.2.1. *Replace ASCE 7 Exception 1. of Section 12.10.2.1 by the following:*

EXCEPTIONS:

1. The forces calculated above need not exceed those calculated using the load combinations with overstrength factor of Section 12.4.3.2 with seismic forces determined by Equation 12.10- 3 and transfer forces, where applicable.

1616A.1.15 ASCE 7, Section 12.12.3. [redacted]

1616A.1.16 ASCE 7, Section 12.13.1. *Modify ASCE 7 section 12.13.1 by adding Section 12.13.1.1 as follows:*

12.13.1.1 Foundations and superstructure-to-foundation connections. *The foundation shall be capable of transmitting the design base shear and the overturning forces from the structure into the supporting soil. Stability against overturning and sliding shall be in accordance with Section 1605A.1.1.*

In addition, the foundation and the connection of the superstructure elements to the foundation shall have the strength to resist, in addition to gravity loads, the lesser of the following seismic loads:

1. *The strength of the superstructure elements.*

2. *The maximum forces that ~~would occur~~ can be delivered to the foundation in ~~the~~ a fully yielded structural system.*

3. *Forces from the Load Combinations with overstrength factor in accordance with ASCE 7 Section 12.4.3.2.*

Exceptions:

1. *Where reference standards specify the use of higher design loads.*

2. *When it can be demonstrated that inelastic deformation of the foundation and superstructure-to-foundation connection will not result in a weak story or cause collapse of the structure.*

3. *Where ~~basic structural system~~ seismic force-resisting system consists of light framed walls with shear panels, unless the reference standard specifies the use of higher design loads.*

Where the computation of the seismic overturning moment is by the equivalent lateral-force method or the modal analysis method, reduction in overturning moment permitted by section 12.13.4 of ASCE 7 may be used.

Where moment resistance is assumed at the base of the superstructure elements, the rotation and flexural deformation of the foundation as well as deformation of the superstructure-to-foundation connection shall be considered in the drift and deformation compatibility analyses.

1616A.1.17 ASCE 7, Section 13.1.3. *Reserved for OSHPD*

1616A.1.18 ASCE 7, Section 13.1.4. *Replace ASCE 7 Section 13.1.4 with the following:*

13.1.4 Exemptions. *The following nonstructural components are exempt from the requirements of this section:*

1. Furniture (except storage cabinets as noted in Table 13.5-1).
2. Temporary or moveable (mobile) equipment.

Exceptions:

a) Equipment shall be anchored if it is permanently attached to the building utility services such as electricity, gas, or water. For the purposes of this requirement, "permanently attached" shall include all electrical connections except plugs for duplex receptacles.

b) The enforcement agency shall be permitted to require temporary attachments for movable equipment which is usually stationed in one place and heavier than 400 pounds <u>or has a center of mass located 4 feet (1.22 m) or more above the adjacent floor or roof level that directly support the component</u>, when they are not in use for a period longer than 8 hours at a time.

3. Architectural, mechanical and electrical components in Seismic Design Categories D, E, or F where all of the following apply:

a. The component is positively attached to the structure;

b. Flexible connections are provided at seismic separation joints and between the component and associated ductwork, piping, and conduit; and either:

i. The component weighs 400 pounds (1780 N) or less and has a center of mass located 4 feet (1.22 m) or less above the adjacent floor or roof level that directly support the component;

Exception: *Special Seismic Certification requirements of this code in accordance with Section 1705A.13.3 ~~1705A.12.4~~ shall be applicable.*

or

ii. The component weighs 20 pounds (89 N) or less or, in the case of a distributed system, 5 lb/ft (73 N/m) or less.

Exception: *The enforcement agency shall be permitted to require attachments for equipment with hazardous contents to be shown on construction documents irrespective of weight.*

1616A.1.19 ASCE 7, Section 13.4. *Replace ASCE 7 Section 13.4.2.3 with the following:*

13.4.2.3 Prequalified ~~P~~ post-installed anchors and specialty inserts in Concrete and Masonry.

Post-installed anchors and specialty inserts in concrete that are ~~used for component anchorage shall be~~ pre-qualified for seismic applications in accordance with ACI 355.2, ACI 355.4, ICC-ES AC193, ICC-ES AC232, ~~or~~ ICC-ES AC308 or ICC-ES AC446 shall be permitted. Post-installed anchors in masonry ~~used for component anchorage~~ shall be pre-qualified for seismic applications in accordance with ICC-ES AC01, AC58, or AC106.

Use of screw anchors shall be limited to dry interior conditions and shall not be used in building enclosures. Re-use of screw anchors or screw anchor holes shall not be permitted.

Exception: [DSA-SS] *Screw anchors are not prohibited for use in building enclosures.*

1616A.1.20 ASCE 7, Section 13.4.5 *Modify ASCE 7 Section 13.4.5 by adding Section 13.4.5.1 as follows:*

[Relocated from Section 1908A.1.1] ***13.4.5.1*** ~~***1908A.1.1***~~ ***Power Actuated Fasteners:*** *Power actuated fasteners qualified in accordance with ICC-ES AC 70 shall be deemed to satisfy the requirements of Section 13.4.5.* ~~*this section.*~~

Power actuated fasteners shall be permitted in seismic shear for components exempt from permit requirements by Section 1616A.1.18 of this code and for interior non-bearing non-shear wall partitions only. Power actuated fastener shall not be used to anchor seismic bracing, exterior cladding or curtain wall systems.

Exception: Power actuated fasteners in steel to steel connections prequalified for seismic application by cyclic tests in accordance with ICC-ES AC 70 shall be permitted for seismic design.

1616A.1.21 ~~***1616A.1.20***~~ ***ASCE 7, Section 13.5.6.*** *Replace ASCE 7, Section 13.5.6 with the following:*

13.5.6 Suspended Ceilings. *Suspended ceilings shall be in accordance with this section.*

13.5.6.1 Seismic Forces. *The weight of the ceiling, W_p, shall include the ceiling grid; ceiling tiles or panels; light fixtures if attached to, clipped to, or laterally supported by the ceiling grid; and other components that are laterally supported by the ceiling. W_p shall be taken as not less than 4 psf (19 N/m^2).*

The seismic force, F_p, shall be transmitted through the ceiling attachments to the building structural elements or the ceiling-structure boundary.

13.5.6.2 Seismic Design Requirements. *Suspended acoustical tile or lay-in panel ceilings shall be designed in accordance with ASTM E 580 Section 5.2.8 and the requirements of Sections 13.5.6.2.1 and 13.5.6.2.2, or be designed in accordance with Section 13.2.1.1, or be seismically qualified in accordance with Sections 13.2.5 or 13.2.6.*

13.5.6.2.1. Industry Standard Construction for Acoustical Tile or Lay-In Panel Ceilings. *Acoustical tile or lay-in panel ceilings in Seismic Design Categories D, E, and F shall be designed and installed in accordance with ASTM C635, ASTM C636, and ASTM E 580, Section 5 - Seismic Design Categories D, E, and F as modified by Section 13.5.6.2.2.*

Exception to Section 13.5.8.1 shall not be used in accordance with ASTM E 580 Section 5.5.

13.5.6.2.2 Modification to ASTM E 580. *Modify ASTM E 580 by the following:*

1. ***Exitways.*** *Lay-in ceiling assemblies in exitways of hospitals and essential services buildings shall be installed with a main runner or cross runner surrounding all sides of each piece of tile, board or panel and each light fixture or grille. A cross runner that supports another cross runner shall be considered as a main runner for the purpose of structural classification. Splices or intersections of such runners shall be attached with through connectors such as pop rivets, screws, pins, plates with end tabs or other approved connectors. Lateral force diagonal bracing may be omitted in the short or transverse direction of exitways, not exceeding 8 feet wide, when perimeter support in accordance with ASTM E 580 Sections 5.2.2 and 5.2.3 is provided and the perimeter wall laterally supporting the ceiling in the short or transverse direction is designed to carry the ceiling lateral forces. The connections between the ceiling grid, wall angle and the wall shall be designed to resist the ceiling lateral forces.*

2. ***Corridors and Lobbies.*** *Expansion joints shall be provided in the ceiling at intersections of corridors and at junctions of corridors and lobbies or other similar areas.*

3. ***Lay-in panels.*** *Metal panels and panels weighing more than 1/2 pounds per square foot (24 N/m^2) other than acoustical tiles shall be positively attached to the ceiling suspension runners.*

4. ***Lateral force bracing.*** *Lateral force bracing is required for all ceiling areas except that they shall be permitted to be omitted in rooms with floor areas up to 144 square feet when perimeter support in accordance with ASTM E 580 Sections 5.2.2 and 5.2.3 are provided and perimeter walls are designed to carry the ceiling lateral forces. The connections between the ceiling grid, wall angle and the wall shall be designed to*

resist the ceiling lateral forces. Horizontal restraint point spacing shall be justified by analysis or test and shall not exceed a spacing of 12 feet by 12 feet. ~~Restraint~~ Bracing wires shall be secured with four tight twists in 1 1/2 inches, or an approved alternate connection.

5. *Ceiling support and bracing wires shall be spaced a minimum of 6" from all pipes, ducts, conduits and equipment that are not braced for horizontal forces, unless approved otherwise by the building official.*

~~5. **Ceiling fixtures.** Fixtures installed in acoustical tile or lay-in panel ceilings shall be mounted in a manner that will not compromise ceiling performance.~~

~~All recessed or drop-in light fixtures and grilles shall be supported directly from the fixture housing to the structure above with a minimum of two 12 gage wires located at diagonally opposite corners. Leveling and positioning of fixtures may be provided by the ceiling grid. Fixture support wires may be slightly loose to allow the fixture to seat in the grid system. Fixtures shall not be supported from main runners or cross runners if the weight of the fixtures causes the total dead load to exceed the deflection capability of the ceiling suspension system.~~

~~Fixtures shall not be installed so that the main runners or cross runners will be eccentrically loaded.~~

~~Surface-mounted fixtures shall be attached to the main runner with at least two positive clamping devices made of material with a minimum of 14 gage. Rotational spring catches do not comply. A 12 gage suspension wire shall be attached to each clamping device and to the structure above.~~

~~6. **Partitions.** Where the suspended ceiling system is required to provide lateral support for the permanent or relocatable partitions, the connection of the partition to the ceiling system, the ceiling system members and their connections, and the lateral force bracing shall be designed to support the reaction force of the partition from prescribed loads applied perpendicular to the face of the partition. Partition connectors, the suspended ceiling system and the lateral force bracing shall all be engineered to suit the individual partition application and shall be shown or defined in the drawings or specifications.~~

1616A.1.22 ~~***1616A.1.21.***~~ ~~Reserved for OSHPD~~

1616A.1.23 ~~1616A.1.22~~ ASCE 7 Tables 13.5-1 and 13.6-1. *Modify ASCE 7, Tables 13.5-1 & 13.6-1 by the following:*

1. *For components with R_p greater than 1.5, overstrength factor (Ω_0) for design of anchorage to concrete and vibration isolators along with associated snubbers/connections shall be 2.0.*
2. *For Exterior Nonstructural Wall Elements and Connections, overstrength factor (Ω_0) shall be 1.0.*

1616A.1.24 ~~1616A.1.23~~ ASCE 7, Section 13.6.5. *Modify ASCE 7, Section 13.6.5.6 Exceptions 1 and 2 as follows:*

Exceptions:

1. *Design for the seismic forces of Section 13.3 shall not be required for raceways where either:*

   a. *Trapeze assemblies are used to support raceways and the total weight of the raceway supported by trapeze assemblies is less than 10 lb/ft (146 N/m), or*
   b. *The raceway is supported by hangers and each hanger in the raceway run is 12 in. (305 mm) or less in length from the raceway support point to the supporting structure. Where rod hangers are used with a diameter greater than 3/8 inch, they shall be equipped with swivels to prevent inelastic bending in the rod.*

2. *Design for the seismic forces of Section 13.3 shall not be required for conduit, regardless of the value of I_p, where the conduit is less than 2.5 in. (64 mm) trade size.*

1616A.1.25 ~~1616A.1.24~~ ASCE 7, Section 13.6.7. *Replace ASCE 7, Section 13.6.7 Exceptions 1 and 2 with the following:*

Exceptions:

The following exceptions pertain to ductwork not designed to carry toxic, highly toxic, or flammable gases or used for smoke control:

1. *Design for the seismic forces of Section 13.3 shall not be required for ductwork where either:*

a. *Trapeze assemblies are used to support ductwork and the total weight of the ductwork supported by trapeze assemblies is less than 10 lb/ft (146 N/m); or*

b. *The ductwork is supported by hangers and each hanger in the duct run is 12 in. (305 mm) or less in length from the duct support point to the supporting structure. Where rod hangers are used with a diameter greater than 3/8 inch, they shall be equipped with swivels to prevent inelastic bending in the rod.*

2. Design for the seismic forces of Section 13.3 shall not be required where provisions are made to avoid impact with larger ducts or mechanical components or to protect the ducts in the event of such impact; and HVAC ducts have a cross-sectional area of 6 ft^2 (0.557 m^2) or less, or weigh 10 lb/ft (146 N/m) or less.

~~***1616A.1.25 ASCE 7, Section 13.6.8.2.*** *Modify ASCE 7, Section 13.6.8.2 by adding Exception as follows:*~~

~~*Exception: Anchor capacities shall be determined in accordance with material chapters of this code in lieu of using those in NFPA 13 and demand shall be based on ASCE 7.*~~

1616A.1.26 ASCE 7, Section 13.6.8.3. *Replace ASCE 7, Section 13.6.8.3 with the following:*

13.6.8.3 Exceptions. *Design of piping systems and attachments for the seismic forces of Section 13.3 shall not be required where one of the following conditions apply:*

1. *Trapeze assemblies are used to support piping whereby no single pipe exceeds the limits set forth in 3a. or b. below and the total weight of the piping supported by the trapeze assemblies is less than 10 lb/ft (146 N/m).*

2. *The piping is supported by hangers and each hanger in the piping run is 12 in. (305 mm) or less in length from the top of the pipe to the supporting structure. Where pipes are supported on a trapeze, the trapeze shall be supported by hangers having a length of 12 in. (305 mm) or less. Where rod hangers are used with a diameter greater than 3/8 inch, they shall be equipped with swivels to prevent inelastic bending in the rod.*

3. *Piping having an R_p in Table 13.6-1 of 4.5 or greater is used and provisions are made to avoid impact with other structural or nonstructural components or to protect the piping in the event of such impact and where the following size requirements are satisfied:*

   a. For Seismic Design Categories D, E, or F and values of I_p greater than one, the nominal pipe size shall be 1 inch (25 mm) or less.
   b. For Seismic Design Categories D, E, or F, where I_p = 1.0 the nominal pipe size shall be 3 inches (80 mm) or less.

The exceptions above shall not apply to elevator piping.

1616A.1.27 ASCE 7, Section 13.6.10.1. *Modify ASCE 7 Section 13.6.10.1 by adding Section 13.6.10.1.1 as follows:*

13.6.10.1.1 Elevators guide rail support. *The design of guide rail support-bracket fastenings and the supporting structural framing shall use the weight of the counterweight or maximum weight of the car plus not less than 40 percent of its rated load. The seismic forces shall be assumed to be distributed one third to the top guiding members and two thirds to the bottom guiding members of cars and counterweights, unless other substantiating data are provided. In addition to the requirements of ASCE 7 Section 13.6.10.1, the minimum seismic forces shall be 0.5g acting in any horizontal direction.*

1616A.1.28 ASCE 7, Section 13.6.10.4. *Replace ASCE 7, Section 13.6.10.4 as follows:*

13.6.10.4 Retainer plates. *Retainer plates are required at the top and bottom of the car and counterweight, except where safety devices acceptable to the enforcement agency are provided which meet all requirements of the retainer plates, including full engagement of the machined portion of the rail. The design of the car, cab stabilizers, counterweight guide rails and counterweight frames for seismic forces shall be based on the following requirements:*

1. *The seismic force shall be computed per the requirements of ASCE 7 13.6.10.1. The minimum horizontal acceleration shall be 0.5g for all buildings.*

2. *W_p shall equal the weight of the counterweight or the maximum weight of the car plus not less than 40 percent of its rated load.*

3. *With the car or counterweight located in the most adverse position, the stress in the rail shall not exceed the limitations specified in these regulations, nor shall the deflection of the rail relative to its supports exceed the deflection listed below:*

RAIL SIZE (weight per foot of length, pounds)	*WIDTH OF MACHINED SURFACE (inches)*	*ALLOWABLE RAIL DEFLECTION (inches)*
8	*1 ¼*	*0.20*
11	*1 ½*	*0.30*
12	*1 ¾*	*0.40*
15	*1 31/32*	*0.50*
18 ½	*1 31/32*	*0.50*
22 ½	*2*	*0.50*
30	*2 ¼*	*0.50*

For SI: 1 inch = 25 mm, 1 foot = 305 mm.

NOTE: Deflection limitations are given to maintain a consistent factor of safety against disengagement of retainer plates from the guide rails during an earthquake.

4. *Where guide rails are continuous over supports and rail joints are within 2 feet (610 mm) of their supporting brackets, a simple span may be assumed.*

5. *The use of spreader brackets is allowed.*

6. *Cab stabilizers and counterweight frames shall be designed to withstand computed lateral load with a minimum horizontal acceleration of 0.5g.*

1616A.1.29 ASCE 7, Section 16.1.4. *Remove ASCE 7 Sections 16.1.4.1 and 16.1.4.2 and modify Section 16.1.4 by the following:*

Maximum scaled base shears used to determine forces and drifts shall not be less than the base shears calculated using the equivalent lateral force procedure of Section 12.8.

1616A.1.30 ASCE 7, Section 16.2.2. *Modify ASCE 7 Section 16.2.2 by adding the following:*

Requirements of this section shall be deemed to be satisfied for new buildings, using acceptance criteria in Section 16.2.4.2, by the nonlinear modeling parameters in ASCE 41.

1616A.1.31 ASCE 7, Section 16.2.3. *Modify ASCE 7 Section 16.2.3 by adding the following:*

Requirements of this section shall be deemed to be satisfied by using load combinations in Sections 12.4.2.3 and 12.4.3.2 with 25% of the required live loads.

1616A.1.32 ASCE 7, Section 16.2.4. *Modify ASCE 7 Section 16.2.4 by the following:*

a) Where site is located within 3.1 miles (5 km) of an active fault at least seven ground motions shall be analyzed and response parameters shall be based on larger of the average of the maximum response with ground motions applied as follows:

1. *Each of the ground motions shall have their maximum component at the fundamental period aligned in one direction.*
2. *Each of the ground motion's maximum component shall be rotated orthogonal to the previous analysis direction.*

b) Where site is located more than 5 km from an active fault at least 10 ground motions shall be analyzed. The ground motions shall be applied such that one-half shall have their maximum component aligned in one direction and the other half aligned in the orthogonal direction. The average of the maximum response of all the analyses shall be used for design.

1616A.1.33 ASCE 7, Section 16.2.4.1. [Reserved for OSHPD]

1616A.1.34 ASCE 7, Section 16.2.4.2. [Reserved for OSHPD]

~~***1616A.1.35 ASCE 7, Section 17.2.1.*** *Modify ASCE 7, Section 17.2.1 by adding the following:*~~

~~*The importance factor, I_p, for parts and portions of a seismic-isolated building shall be the same as that required for a fixed-base building of the same risk category.*~~

1616A.1.35 ~~***1616A.1.36***~~ ***ASCE 7 Section 17.2.4.7.*** *Modify ASCE 7, Section 17.2.4.7 by adding the following:*

The effects of uplift ~~and/or rocking~~ shall be explicitly accounted for ~~in the analysis and~~ in the testing of the isolator units.

~~***1616A.1.37 ASCE 7, Section 17.2.5.2.*** *Modify ASCE 7, Section 17.2.5.2 by adding the following:*~~

~~*The separation requirements for the building above the isolation system and adjacent buildings shall be the sum of the factored displacements for each building. The factors to be used in determining separations shall be:*~~

~~*1. For seismically isolated buildings, the deformation resulting from the analyses using the Risk-Targeted Maximum Considered Earthquake unmodified by R_I.*~~

~~*2. For fixed based buildings, C_d times the elastic deformations resulting from an equivalent static analysis using the seismic base shear computed via ASCE 7, Section 12.8.*~~

1616A.1.36 ~~***1616A.1.38***~~ ***ASCE 7, Section 17.4.*** *Modify ASCE 7, Section 17.4.2 by adding the following:*

17.4.2.3 Linear Procedure. *Linear procedures shall not be used in Seismic Design Category E & F structures.* ~~*be limited to structures located at sites where mapped value of S_1 is less than 0.6g.*~~

1616A.1.37 ~~***1616A.1.39***~~ ***ASCE 7, Section*** *17.6 Modify ASCE 7, Section 17.6 by adding the following:*

17.6.1.1 Minimum Seismic Force. *For the response spectrum and linear response history procedures, V_b and V_s, shall not be taken less than those calculated in accordance with Equations 17.5-7 and 17.5-8.*

1616A.1.38 ~~***1616A.1.40***~~ ***ASCE 7, Section 18.3.1.*** *Modify ASCE 7, Section 18.3.1 by replacing the third paragraph with the following:*

If the calculated force in an element of the seismic force resisting system does not exceed 1.5 times its nominal strength for the Risk-Targeted Maximum Considered Earthquake (MCE_R) nor its nominal strength for the Design Earthquake (DE), the element is permitted to be modeled as linear. For this section, the MCE_R and DE response shall be based on largest response due to a single ground motion and not the average response of suite of ground motions.

1616A.1.39 ~~*1616A.1.41*~~ ~~[Reserved for OSHPD]~~

1616A.1.40 ~~*1616A.1.42*~~ ~~[Reserved for OSHPD]~~

~~[All existing amendments that are not revised above shall continue without any changes]~~

Notation for [DSA-SS]
Authority: Education Code § 17310 and 81142, and H&S Code §16022.
Reference: Education Code §§ 17280 through 17317, and 81130 through 81147, and Health and Safety Code §§16000 through 16023.

CHAPTER 17*A*

SPECIAL INSPECTIONS AND TESTS

Adopt and/or codify chapter as amended below:

PROPOSED ADOPTION	DSA-SS	DSA-SS/CC	Comments
Adopt entire chapter without amendments			
Adopt entire chapter as amended	X	X	
Adopt only those sections listed below			

~~[All existing California amendments that are not revised below shall continue without change]~~

SECTION 1701*A*

GENERAL

1701*A*.1 Scope. The provisions of this chapter shall govern the quality, workmanship and requirements for materials covered. Materials of construction and tests shall conform to the applicable standards listed in this code.

1701A.1.1 Application. *The scope of application of Chapter 17A is as follows:*

1. ***[DSA-SS & DSA-SS/CC]*** *Structures regulated by the Division of the State Architect-Structural Safety, which include those applications listed in Sections 1.9.2.1 (DSA-SS), and 1.9.2.2*

(DSA-SS/CC). These applications include public elementary and secondary schools, community colleges and state-owned or state leased essential services buildings

2. [Reserved for OSHPD]

Exception: *[Reserved for OSHPD]*

1701A.1.2 Amendments in this chapter. *DSA-SS adopts this chapter and all amendments.*

Exception: *Amendments adopted by only one agency appear in this chapter preceded with the appropriate acronym of the adopting agency, as follows:*

1. Division of the State Architect - Structural Safety:
[DSA-SS] *For applications listed in Section 1.9.2.1.*
[DSA-SS/CC] *For applications listed in Section 1.9.2.2.*

2. [Reserved for OSHPD]

1701A.1.3 Reference to other chapters.

1701A.1.3.1 [DSA-SS/CC] *Where reference within this chapter is made to sections in Chapters 16A, 19A, 21A, and 22A, ~~and 34A,~~ the provisions in Chapters 16, 19, 21, and 22, ~~and 34~~ respectively, shall apply instead.*

...

1701A.3 ~~1701A.4~~ Special ~~inspectors~~ inspections and tests. *[Reserved for OSHPD]*

1701A.4 ~~1701A.5~~ Special ~~inspectors~~ inspections and tests. [DSA-SS & DSA-SS/CC] *In addition to the project inspector required by the California Administrative Code (CCR, Title 24, Part 1), Section 4-333, the owner shall employ one or more approved agencies ~~special inspectors~~ to provide special inspections and tests as required by the enforcement agency during construction on the types of work*

listed under Chapters 17A, 18A, 19A, 20, 21A, 22A, 23, and 25 and ~~34 of~~ the California Existing Building Code and noted in the special test, inspection and observation plan required by Section 4-335 of the California Administrative Code.

SECTION 1702A
DEFINITIONS

1702A.1 Definitions. The following terms are defined in Chapter 2 *except those defined below which shall, for the purposes of this ~~section~~ chapter, have the meanings shown herein.*

...

PROJECT INSPECTOR. [DSA-SS, DSA-SS/CC] *The person approved to provide inspection in accordance with the California Administrative Code, Section 4-333(b). The term "project inspector" is synonymous with "inspector of record."*

...

Quality Assurance *(QA). Special inspections and testing provided by an approved agency employed by the Owner. Project specific testing required by approved construction documents shall be performed by the approved agency responsible for Quality Assurance (QA), unless approved otherwise by the building official.*

Quality Control (QC). *Inspections and materials/functionality testing provided by the fabricator, erector, manufacturer or other responsible contractor as applicable.*

...

SPECIAL INSPECTION.

Continuous special inspection. *The full-time observation of work requiring special inspection by a special inspector who is present in the area where the work is being performed.*

Periodic special inspection. *The part-time or intermittent observation of work requiring special*

inspection by a special inspector who is present in the area where the work has been or is being performed and at the completion of the work.

...

SECTION 1704*A*
SPECIAL INSPECTIONS, AND TESTS, CONTRACTOR RESPONSIBILITY AND STRUCTURAL OBSERVATION

...

1704*A*.2 Special inspections and tests. Where application is made to the building official for construction as specified in Section 105, the owner ~~or the owner's authorized agent, other than contractor,~~ shall employ one or more *approved agencies* to provide special inspections and tests during construction on the types of work specified in Section 1705*A* and identify the approved agencies to the building official. These special inspections and tests are in addition to the inspections by the building official that are identified in Section 110.

Exceptions:

1. *Special inspections* and tests are not required for construction of a minor nature or as warranted by conditions in the jurisdiction as *approved* by the *building official*.
2. *[DSA-SS, DSA-SS/CC] Reference to Section 105 and Section 110 shall be to the California Administrative Code instead.*

~~2. Unless otherwise required by the building official, special inspections are not required for Group U occupancies that are accessory to a residential occupancy including, but not limited to, those listed in Section 312.1.~~

~~3. Special inspections are not required for portions of structures designed and constructed in accordance with the cold-formed steel light-frame construction provisions of Section 2211.7 or the conventional light-frame construction provisions of Section 2308.~~

~~4. The contractor is permitted to employ the approved agencies where the contractor is also the owner.~~

...

1704A.2.3 Statement of special inspections. The applicant shall submit a statement of *special inspections prepared by the registered design professional in responsible charge* in accordance with Section 107.1as a condition for ~~permit issuance~~ *construction documents review*. This statement shall be in accordance with Section 1704*A*.3.

[DSA-SS, DSA-SS/CC] Reference to Section 107.1 shall be to the California Administrative Code instead.

~~**Exception:** A statement of *special inspections* is not required for portions of structures designed and constructed in accordance with the cold-formed steel light frame construction provisions of Section 2211.7 or the conventional light frame construction provisions of Section 2308.~~

1704*A*.2.4 Report requirement. *The inspector(s) of record and* ~~A~~ approved agencies shall keep records of special inspections and tests. The *inspector of record and* approved agency shall submit reports of special inspections and tests to the building official, and to the registered design professional in responsible charge *as required by the California Administrative Code.* Reports shall indicate that work inspected or tested was or was not completed in conformance to approved construction documents *as required by the California Administrative Code and this code.* ~~*Title 24 Parts 1 and 2.*~~ Discrepancies shall be brought to the immediate attention of the contractor for correction. If they are not corrected, the discrepancies shall be brought to the attention of the building official and to the registered design professional in responsible charge prior to the completion of that phase of the work. A final report documenting required special inspections and tests, and correction of any discrepancies noted in the inspections or tests, shall be submitted at a point in time agreed upon prior to the start of work by the owner or owner's authorized agent to the building official.

1704*A*.2.5 Special inspection of fabricated items. Where fabrication of structural, load-bearing or lateral load resisting members or assemblies is being conducted on the premises of a fabricator's shop, *special inspection* of the fabricated items shall be performed during fabrication.

Exceptions: ~~(Reserved for OSHPD)~~

~~1) Special inspections during fabrication are not required where the fabricator maintains approved detailed fabrication and quality control procedures that provide a basis for control of the workmanship and the fabricator's ability to conform to *approved construction documents* and this~~

~~code. Approval shall be based upon review of fabrication and quality control procedures and periodic inspection of fabrication practices by the building official.~~

~~2) *Special inspections* are not required where fabricator is registered and approved in accordance with Section 1704.2.5.1.~~

~~**1704.2.5.1 Fabricator approval.** *Special inspections* during fabrication are not required where the work is done on the premises of a fabricator registered and *approved* to perform such work without *special inspection*. Approval shall be based upon review of the fabricator's written procedural and quality control manuals and periodic auditing of fabrication practices by an *approved* agency. At completion of fabrication, the *approved* fabricator shall submit a *certificate of compliance* to the owner or owner's authorized agent for submittal to the *building official* as *specified in Section 1704.5* stating that the work was performed in accordance with the *approved construction documents.*~~

...

1704*A*.3.2 Seismic requirements in the statement of special inspections. Where Section 1705*A*.12 or 1705*A*.13 specifies *special inspections* or tests for seismic resistance, the statement of special inspections shall identify the *equipment/components that require special seismic certification* ~~designated seismic systems~~ and seismic force resisting systems that are subject to *special inspections* or tests.

...

1704*A*.4 Contractor responsibility. Each contractor responsible for the construction of a main wind- or seismic force resisting system, *installation of equipment/components requiring special seismic certification* ~~designated seismic system~~ or a wind- or seismic-resisting component listed in the statement of special inspections shall submit a written statement of responsibility to the *building official* and the owner or the Owner's authorized agent prior to the commencement of work on the system or component. The contractor's statement of responsibility shall contain acknowledgement of awareness of the special requirements contained in the statement of *special inspections.*

1704A.5 Submittal to the Building official. In addition to the submittal of reports of *special inspections* and tests in accordance with Section 1704A.2.4, reports and certificates shall be submitted by the owner or owner's authorized agent to the building official for each of the following:

1. ~~[Reserved for OSHPD]~~ ~~*Certificate of Compliance* for the fabrication of structural, load-bearing or lateral load-resisting members or assemblies on the premises of a registered and *approved fabricator* in accordance with Section 1704.2.5.1.~~
2. *Certificate of compliance* for the ~~seismic qualification~~ *manufacturer's certification* of non-structural components, supports and attachments in Section 1705*A*.13.2.
3. *Certificate of compliance* for the ~~designated seismic system~~ *equipment/components requiring special seismic certification* in accordance with Section 1705*A*.13.3.

...

1704*A*.6 Structural observations. ~~Where required by the provisions of Section 1704.6.1 or 1704.6.2, t~~ The owner ~~or the owner's authorized agent~~ shall employ a *registered design professional* to perform structural observations. Structural observation does not include or waive the responsibility for inspection in Section 110 or the special inspections in Section 1705A or other sections of this code.

Prior to the commencement of observations, the structural observer shall submit to the *building official* a written statement identifying the frequency and extent of structural observations.

At the conclusion of the work included in the permit, the structural observer shall submit to the *building official* a written statement that the site visits have been made and identify any reported deficiencies that, to the best of the structural observer's knowledge, have not been resolved.

[DSA-SS, DSA-SS/CC] Reference to Section 110 shall be to the California Administrative Code instead.

~~**1704.6.1 Structural observations for seismic resistance.** Structural observations shall be provided for those structures assigned to *Seismic Design Category* D, E or F where one or more of the following conditions exist:~~

~~1. The structure is classified as *Risk Category* III or IV.~~

~~2. The height of the structure is greater than 75 feet (22 860 mm) above the base as defined in ASCE 7.~~

~~3. The structure is assigned to *Seismic Design Category* E, is classified as *Risk Category* I or II, and is greater than two *stories above grade plane*.~~

~~4. When so designated by the *registered design professional* responsible for the structural design.~~

~~5. When such observation is specifically required by the *building official*.~~

~~**1704.6.2 Structural observations for wind requirements.** Structural observations shall be provided for those~~

~~structures sited where *Vasd* as determined in accordance with Section 1609.3.1 exceeds 110 mph (49 m/sec), where one or more of the following conditions exist:~~

~~1. The structure is classified as *Risk Category* III or IV.~~

~~2. The *building height* is greater than 75 feet (22 860 mm).~~

~~3. When so designated by the *registered design professional* responsible for the structural design.~~

~~4. When such observation is specifically required by the *building official*.~~

SECTION 1705*A*
REQUIRED SPECIAL INSPECTIONS AND TESTS

...

1705A.2.1 Structural steel. *Special inspections* and nondestructive testing of structural steel elements in buildings, structures and portions thereof shall be in accordance with the quality assurance ~~inspection~~ requirements ~~of AISC 360~~ *of this section*, ~~*and*~~ *Chapter 22A* *and quality control requirements of AISC 360, AISC 341 and AISC 358.*

Exception: *Special inspection* of railing systems composed of structural steel elements shall be limited to welding inspection of welds at the base of cantilevered rail post.

AISC 360, Chapter N and AISC 341, Chapter J are adopted, except as noted below:

The following provisions of AISC 360, Chapter N are not adopted:

1. *N4., Item 2. (Quality Assurance Inspector Qualifications)*
2. *N5., Item 2. (Quality Assurance)*
3. ***[DSA-SS, DSA-SS/CC]*** *N5., Item 3. (Coordinated Inspection)*

*4. **[DSA-SS, DSA-SS/CC]** N5., Item 4. (Inspection of Welding)*

*5. **[DSA-SS, DSA-SS/CC]** N7 (Approved Fabricators and Erectors)*

*6. **[DSA-SS, DSA-SS/CC]** N8 (Nonconforming Material and Workmanship)*

In addition to the quality assurance inspection requirements contained in AISC 360, Section N5 ~~Item 6 (Inspection of High Strength Bolting)~~ (Minimum Requirements for Inspection of Structural Steel Buildings), the requirements of Table 1705A.2.1 of the California Building Code shall apply.

In addition to the quality assurance requirements contained in AISC 360, Section N6 (Minimum Requirements for Inspection of Composite Construction), the requirements of Table 1705A.2.1 of the California Building Code shall apply.

In addition to the quality assurance requirements contained in AISC 341, Chapter J, Section J5 (Inspection Tasks), the requirements of Section 1704A.3 and Table 1705A.2.1 of the California Building Code shall apply.

TABLE 1705A.2.1 REQUIRED VERIFICATION AND INSPECTION OF STEEL CONSTRUCTION

VERIFICATION AND INSPECTION	CONTINUOUS	PERIODIC	REFERENCED STANDARD[a]	CBC REFERENCE
1. Material verification of high-strength bolts, nuts and washers:				
a. Identification markings to conform to ASTM standards specified in the approved construction documents.	-	X	AISC 360, Section A3.3 and applicable ASTM material standards	-
b. Manufacturer's certificate of compliance required.	-	X	-	-
2. Inspection of high-strength bolting:				
a. Snug-tight joints.	-	X	AISC 360,	-

b. Pretensioned and slip-critical joints using turn-of-nut with matchmarking, twist-off bolt or direct tension indicator methods of installation.	-	X	*Section M2.5*	
c. Pretensioned and slip-critical joints using turn-of-nut without matchmarking or calibrated wrench methods of installation.	X	-		
3. Material verification of structural steel and cold-formed steel deck:				
a. For structural steel, identification markings to conform to AISC 360.	-	X	*AISC 360, Section A3.1*	*2203A.1*
b. For other steel, identification markings to conform to ASTM standards specified in the approved construction documents.	-	X	*Applicable ASTM material standards*	
c. Manufacturer's certified test reports.	-	X		
4. Material verification of weld filler materials:				
a. Identification markings to conform to AWS specification in the approved construction documents.	-	X	*AISC 360, Section A3.5 and applicable AWS A5 documents*	-
b. Manufacturer's certificate of compliance required.	-	X	-	-
5. Inspection of welding:				
a. Structural steel and cold-formed steel deck:				
1) Complete and partial joint penetration groove welds.	X	-	*AWS D1.1* *AWS D1.8*	*1705A.2.1*
2) Multipass fillet welds.	X	-		
3) Single-pass fillet welds > $^5/_{16}$"	X	-		
4) Plug and slot welds.	X	-		
5) Single-pass fillet welds ≤ $^5/_{16}$"	-	X		
6) Floor and roof deck welds.	-	X	*AWS D1.3*	

TABLE 1705A.2.1- continued

REQUIRED VERIFICATION AND INSPECTION OF STEEL CONSTRUCTION

VERIFICATION AND INSPECTION	CONTINUOUS	PERIODIC	REFERENCED STANDARD[a]	CBC REFERENCE
b. Reinforcing steel:				-
1) Verification of weldability of reinforcing steel other than ASTM A 706.	-	X	AWS D1.4 ACI 318: Sections 26.6.4.1, 18.2.8, 25.5.7.4 ~~3.5.2~~	
2) Reinforcing steel resisting flexural and axial forces in intermediate and special moment frames, and boundary elements of special structural walls of concrete and shear reinforcement.	X	-		
3) Shear reinforcement.	X	-		
4) Other reinforcing steel.	-	X		
6. Inspection of steel frame joint details for compliance:				
a. Details such as bracing and stiffening.	-	X	-	1705A.2.1 ~~1705A.2.2~~
b. Member locations.	-	X		
c. Application of joint details at each connection.	-	X		

For SI: 1 inch = 25.4 mm.

a. Where applicable, see also Section ~~1705A.11~~ 1705A.12, Special inspection for seismic resistance

1705A.2.2 Cold-formed steel deck. *Special inspections* ~~and qualification of welding special inspectors~~ for cold formed steel floor and roof deck shall be in accordance with the quality assurance inspection requirements of SDI QA/QC.

Deck weld special inspection shall also satisfy requirements in Table 1705A.2.1 and Section 1705A.2.5.

...

1705A.2.3.1 ***~~1705A.2.2.3~~*** ***Steel joist and joist girder inspection.*** *Special inspection is required during the manufacture and welding of steel joists or joist girders. The approved agency ~~special inspector~~ shall verify that proper quality control procedures and tests have been employed for all materials and the manufacturing process, and shall perform visual inspection of the finished product. The approved agency ~~special inspector~~ shall place a distinguishing mark, and/or tag with this distinguishing mark, on each inspected joist or joist girder. This mark or tag shall remain on the joist or joist girder throughout the job site receiving and erection process.*

...

1705A.2.4.1 ***~~1705A.2.2.4~~*** ***Light-framed steel truss inspection.*** *The manufacture of cold-formed light framed steel trusses shall be continuously inspected by an approved agency ~~a qualified special inspector approved by the enforcement agency~~. The approved agency ~~special inspector~~ shall verify conformance of materials and manufacture with approved plans and specifications. The approved agency ~~special inspector~~ shall place a distinguishing mark, and/or tag with this distinguishing mark, on each inspected truss. This mark or tag shall remain on the truss throughout the job site receiving and erection process.*

1705A.2.5 ***~~1705A.2.2.5~~*** ***Inspection of structural welding.*** *Inspection of all shop and field welding operations shall be made by a qualified welding inspector approved by the enforcement agency. The minimum requirements for a qualified welding inspector shall be as those for an AWS Certified Welding Inspector (CWI), as defined in the provisions of the AWS QC1. ~~All welding inspectors shall be as approved by the enforcement agency~~.*

Exception: [redacted]

The welding inspector shall make a systematic daily record of all welds. In addition to other records, this record shall include:

1. *Identification marks of welders.*

2. *List of defective welds.*

3. Manner of correction of defects.

The welding inspector shall check the material, details of construction and procedure, as well as workmanship of the welds. The inspector shall verify that the installation of end-welded stud shear connectors is in accordance with the requirements of AWS D1.1 and the approved plans and specifications. The ~~inspector~~ approved agency shall furnish the architect, structural engineer, and the enforcement agency with a verified report, that the welding ~~is proper and~~ has been done in conformance ~~conformity~~ with AWS D1.1, D1.3, D1.8, and the approved construction documents.

1705A.3 Concrete construction. *Special inspections* and tests of concrete construction shall be performed in accordance with this section and Table 1705*A*.3.

Exception: *Special inspections and tests* shall not be required for~~:~~

~~1. Isolated spread concrete footings of buildings three stories or less above *grade plane* that are fully supported on earth or rock.~~
~~2. Continuous concrete footings supporting walls of buildings three stories or less above *grade plane* that are fully supported on earth or rock where:~~
~~2.1. The footings support walls of light-frame construction;~~
~~2.2. The footings are designed in accordance with Table 1809.7; or~~
~~2.3. The structural design of the footing is based on a specified compressive strength, f'_c, no greater than 2,500 pounds per square inch (psi) (17.2 MPa), regardless of the compressive strength specified in the approved *construction documents* or used in the footing construction.~~
~~3. Nonstructural concrete slabs supported directly on the ground, including prestressed slabs on grade, where the effective prestress in the concrete is less than 150 psi (1.03 MPa).~~
~~4. Concrete foundation walls constructed in accordance with Table 1807.1.6.2.~~
~~5. C~~ concrete patios, driveways and sidewalks, on grade.

...

1705A.3.3 ***~~1705A.3.2~~*** **Batch plant inspection.** *Except as provided under this ~~S~~ section ~~1705A.3.3~~, the quality and quantity of materials used in transit-mixed concrete and in batched aggregates shall be continuously inspected by an approved agency ~~special inspector~~ at the location where materials are measured.*

1705A.3.3.1 ~~***1705A.3.3***~~ ***Waiver of continuous batch plant inspection.*** *Continuous batch plant inspection may be waived by the registered design professional, subject to approval by the enforcement agency under either of the following conditions:*

1. *The concrete plant complies fully with the requirements of ASTM C 94, Sections 9 ~~8~~ and 10 ~~9~~, and has a current certificate from the National Ready Mixed Concrete Association or another agency acceptable to the enforcement agency. The certification shall indicate that the plant has automatic batching and recording capabilities.*

2. *For single-story light-framed construction (without basement or retaining wall higher than 6' in height measured from bottom of footing to top of wall) ~~buildings~~ and isolated foundations supporting equipment only, where deep foundation elements are not used. ~~where the specified compressive strength f'c of the concrete delivered to the jobsite is 3,500 psi (24.13 MPa) and where the f'c used in design is not greater than 3,000 psi (20.68 MPa)~~.*

When continuous batch plant inspection is waived, the following ~~periodic inspection~~ requirements shall apply and shall be described in the construction documents:

1. *~~Qualified technician of the~~ An approved agency ~~testing laboratory~~ shall check the first batch at the start of the day to verify materials and proportions conform to the approved mix design.*

2. *A ~~L~~ licensed weighmaster shall ~~to~~ positively identify quantity of materials ~~as to quantity~~ and certify ~~to~~ each load by a batch ticket.*

3. *Batch tickets, including material quantities and weights shall accompany the load, shall be transmitted to the inspector of record by ~~a~~ the truck driver with load identified thereon. The load shall not be placed without a batch ticket identifying the mix. The inspector of record shall ~~will~~ keep a daily record of placements, identifying each truck, its load, and time of receipt at the jobsite, and approximate location of deposit in the structure and shall maintain ~~will transmit~~ a copy of the daily record as required by ~~to~~ the enforcement agency.*

1705A.3.3.2 ***Batch plant inspection not required. [DSA-SS, DSA-SS/CC]*** *Batch plant inspection is not required for any of the following conditions, provided they are identified on the approved construction documents and the licensed weighmaster and batch ticket requirements of Section 1705A.3.3.1 are implemented:*

1. *Site flatwork*
2. *Unenclosed site structures, including but not limited to lunch or car shelters, bleachers, solar structures, flag or light poles, or retaining walls.*
3. *Controlled low-strength material backfill*
4. *Single-story relocatable buildings less than 2,160 square feet.*

1705A.3.4 Inspection of prestressed concrete.

1. *In addition to the general inspection required for concrete work, all plant fabrication of prestressed concrete members or tensioning of posttensioned members constructed at the site shall be continuously inspected by an inspector specially approved for this purpose by the enforcement agency.*

2. *The prestressed concrete plant fabrication inspector shall check the materials, equipment, tensioning procedure and construction of the prestressed members and prepare daily written reports. The ~~inspector~~ approved agency shall make a verified report identifying the members by mark and shall include such pertinent data as lot numbers of tendons used, tendon jacking forces, age and strength of concrete at time of tendon release and such other information that may be required.*

3. *The inspector of prestressed members posttensioned at the site shall check the condition of the prestressing tendons, anchorage assemblies and concrete in the area of the anchorage, the tensioning equipment and the tensioning procedure and prepare daily written reports. The ~~inspector~~ approved agency shall make a verified report of the prestressing operation identifying the members or tendons by mark and including such pertinent data as the initial cable slack, net elongation of tendons, jacking force developed, and such other information as may be required.*

4. *The verified reports of construction shall show that of the inspector's own personal knowledge, the work covered by the report has been performed and materials used and installed in every material respect in compliance with the duly approved plans and specifications for plant fabrication inspection. The verified report shall be accompanied by test reports required for materials used. For site posttensioning inspections the verified report shall be accompanied by copies of calibration charts, certified by an approved testing laboratory, showing the relationship between gage readings and force applied by the jacks used in the prestressing procedure.*

1705A.3.5 Concrete pre-placement inspection. *Concrete shall not be placed until the forms and reinforcement have been inspected, all preparations for the placement have been completed, and the preparations have been checked by the inspector of Record.*

1705A.3.6 Placing record. *A record shall be kept on the site of the time and date of placing the concrete in each portion of the structure. Such record shall be kept until the completion of the structure and shall be open to the inspection of the enforcement agency.*

TABLE 1705A.3
REQUIRED SPECIAL INSPECTION AND TESTS OF CONCRETE CONSTRUCTION

TYPE	CONTINUOUS SPECIAL INSPECTION	PERIODIC SPECIAL INSPECTIO	REFERENCE STANDARS	CBC REFERENCE
...				
4. Inspect anchors post installed in hardened concrete members. [b,c]				
a. Adhesive anchors installed in horizontally or upwardly inclined orientations to resist sustained tension loads.	X		ACI 318: 17.8.2.4	
b. Mechanical anchors and adhesive anchors not defined in 4.a.		X	ACI 318: 17.8.2	
...				
...				
...				
~~13. Inspection of adhesive anchors in horizontal and upwardly inclined positions.[c]~~		~~X~~	~~ACI318: D.9.2.2~~	—

...

c. Installation of all adhesive anchors in horizontal and upwardly inclined positions shall be performed by an ACI/CRSI Certified Adhesive Anchor Installer, except where the factored design tension on the anchors is less than 100 lbs and those anchors are clearly noted on the approved construction documents or where the anchors are shear dowels across cold joints in slabs on grade where the slab is not part of the lateral force resisting system.

1705A.4 Masonry construction. *Special inspections* and tests of masonry construction shall be performed in accordance with the quality assurance program requirements of TMS 402/ACI 530/ASCE 5, *as set forth in Table 3.1.3 Level C requirements,* and TMS 602/ACI 530.1/ASCE 6. ~~, *as set forth in Table 1.19.3 Level C* requirements.~~ *Special* ~~I~~ *inspection and testing of post-installed anchors in masonry shall be required in accordance with requirements for concrete in Chapters 17A and 19A.*

~~**Exception:** *Special inspections and tests* shall not be required for:~~

~~1. Empirically designed masonry, glass unit masonry or masonry veneer designed in accordance with Section 2109, 2110 or Chapter 14, respectively, where they are part of structures classified as *Risk Category* I, II or III.~~
~~2. Masonry foundation walls constructed in accordance with Table 1807.1.6.3(1), 1807.1.6.3(2), 1807.1.6.3(3) or 1807.1.6.3(4).~~
~~3. Masonry fireplaces, masonry heaters or masonry chimneys installed or constructed in accordance with Section 2111, 2112 or 2113, respectively.~~

1705*A*.4.1 ~~Empirically designed masonry, g~~ Glass unit masonry and masonry veneer in Risk ~~Category~~ *Categories II, III or* IV. *Special inspections* and tests for ~~empirically designed masonry,~~ glass unit masonry or masonry veneer designed by Section ~~2109,~~ 2110*A* or Chapter 14, respectively, in structures classified as *Risk ~~Category~~ Categories II, III or* IV, shall be performed in accordance with TMS 402/ACI 530/ASCE 5 Level B Quality Assurance.

...

1705*A*.5 Wood construction. *Special inspections* of prefabricated wood structural elements and assemblies shall be in accordance with Section 1704*A*.2.5 *except as modified in this section. Special inspections* of site-built assemblies shall be in accordance with this section.

...

1705A.5.3 Wood structural elements and assemblies. *Special inspection of wood structural elements and assemblies is required, as specified in this section, to ensure conformance with ~~drawings and specifications~~ construction documents, and applicable standards.*

The approved agency ~~special inspector~~ shall furnish a verified report to the design professional in general responsible charge of construction observation, the structural engineer, and the enforcement agency, in accordance with the California Administrative code and this chapter. The verified report shall list all inspected members or trusses, and shall indicate whether or not the inspected members or trusses conform with applicable standards and the approved drawings and specifications. Any non-conforming items shall be indicated on the verified report.

1705A.5.4 Structural glued laminated timber. *Manufacture of all structural glued laminated timber shall be continuously inspected by an approved agency ~~a qualified special inspector approved by the enforcement agency~~.*

The approved agency ~~special inspector~~ shall verify that proper quality control procedures and tests have been employed for all materials and the manufacturing process, and shall perform visual inspection of the finished product. Each inspected member shall be stamped by the approved agency ~~special inspector~~ with an identification mark.

Exception: *Special Inspection is not required for non-custom members of 5-1/8 inch maximum width and 18 inch maximum depth, and with a maximum clear span of 32 feet, manufactured and marked in accordance with ANSI/AITC A 190.1 Section 6.1.1 for non-custom members.*

1705A.5.5 Manufactured open web trusses. *The manufacture of open web trusses shall be continuously inspected by an approved agency ~~a qualified special inspector approved by the enforcement agency~~.*

The approved agency ~~special inspector~~ shall verify that proper quality control procedures and tests have been employed for all materials and the manufacturing process, and shall perform visual inspection of the finished product. Each inspected truss shall be stamped with an identification mark by the ~~special inspector~~ approved agency.

1705A.5.6 Timber connectors. *The installation of all split ring and shear plate timber connectors, and timber rivets shall be continuously inspected by an approved agency ~~a qualified inspector approved by the enforcement agency~~. The approved agency ~~inspector~~ shall furnish the architect, structural engineer*

and the enforcement agency with a report verifying ~~duly verified by him~~ that the materials, timber connectors and workmanship conform to the approved ~~plans and specifications~~ construction documents.

...

1705A.6.1 Soil fill. *All fills used to support the foundations of any building or structure shall be continuously inspected by the geotechnical engineer or his or her qualified representative. It shall be the responsibility of the geotechnical engineer to verify that fills meet the requirements of the approved construction documents and to coordinate all fill inspection and testing during the construction involving such fills.*

The duties of the geotechnical engineer or his or her qualified representative shall include, but need not be limited to, the inspection of cleared areas and benches prepared to receive fill; inspection of the removal of all unsuitable soils and other materials; the approval of soils to be used as fill material; the inspection of placement and compaction of fill materials; the testing of the completed fills; the inspection or review of geotechnical drainage devices, buttress fills or other similar protective measures in accordance with the approved construction documents.

A verified report shall be submitted by the geotechnical engineer as required by the California Administrative Code. The report shall indicate that all tests and inspection required by the approved construction documents were completed and that the tested materials and/or inspected work meet the requirements of the approved construction documents.

...

1705A.7.1 ***Driven deep foundations observation.*** *The installation of driven deep foundations shall be continuously inspected by a qualified representative of the geotechnical engineer responsible for that portion of the project.*

The representative of the geotechnical engineer shall make a report of the deep foundation pile-driving operation giving such pertinent data as the physical characteristics of the deep foundation pile-driving equipment, identifying marks for each deep foundation pile, the total depth of embedment for each deep foundation; and when the allowable deep foundation pile loads are determined by a dynamic load formula, the design formula used, and the permanent

penetration under the last 10 blows. One copy of the report shall be sent to the enforcement agency.

...

1705*A*.11.1 Structural wood. Continuous special inspection is required during field gluing operations of elements of the main windforce-resisting system. Periodic special inspection is required for nailing, bolting, anchoring and other fastening of elements of the main windforce-resisting system, including wood shear walls, wood diaphragms, drag struts, braces and hold-downs.

~~**Exception:** *Special inspections are* not required for wood shear walls, shear panels and diaphragms, including nailing, bolting, anchoring and other fastening to other components of the main windforce-resisting system, where the fastener spacing of the sheathing is more than 4 inches (102 mm) on center.~~

1705*A*.11.2 Cold-formed steel light-frame construction. Periodic special inspection is required for welding operations of elements of the main windforce-resisting system. Periodic special inspection is required for screw attachment, bolting, anchoring and other fastening of elements of the main windforce-resisting system, including shear walls, braces, diaphragms, collectors (drag struts) and hold-downs.

~~**Exception:** *Special inspections are* not required for cold formed steel light frame shear walls and diaphragms, including screwing, bolting, anchoring and other fastening to components of the windforce resisting system, where either of the following apply:~~

~~1. The sheathing is gypsum board or fiberboard.~~
~~2. The sheathing is wood structural panel or steel sheets on only one side of the shear wall, shear panel or diaphragm assembly and the fastener spacing of the sheathing is more than 4 inches (102 mm) on center (o.c.).~~

...

1705*A*.12 Special inspections for seismic resistance. *Special inspections* for seismic resistance shall be required as specified in Sections 1705*A*.12.1 through 1705*A*.12.9, unless exempted by the exceptions of Section 1704*A*.2.

~~**Exception:** The special inspections specified in Sections 1705.12.1 through 1705.12.9 are not required for structures designed and constructed in accordance with one of the following:~~

~~1. The structure consists of light-frame construction; the design spectral response acceleration at short periods, S_{DS}, as determined in Section 1613.3.4, does not exceed 0.5; and the building height of the structure does not exceed 35 feet (10 668 mm).~~

~~2. The seismic force-resisting system of the structure consists of reinforced masonry or reinforced concrete; the design spectral response acceleration at short periods, S_{DS}, as determined in Section 1613.3.4, does not exceed 0.5; and the building height of the structure does not exceed 25 feet (7620 mm).~~

~~3. The structure is a detached one- or two-family dwelling not exceeding two *stories above grade plane* and does not have any of the following horizontal or vertical irregularities in accordance with Section 12.3 of ASCE 7:~~

~~3.1. Torsional or extreme torsional irregularity.~~

~~3.2. Nonparallel systems irregularity.~~

~~3.3. Stiffness-soft story or stiffness-extreme soft story irregularity.~~

~~3.4. Discontinuity in lateral strength-weak story irregularity.~~

1705A.12.1 Structural steel. *Special inspections* for structural steel shall be in accordance with Section 1705A.12.1.1 or 1705A.12.1.2, as applicable.

1705A.12.1.1 Seismic Force-Resisting Systems. *Special inspections* of structural steel in the seismic force resisting systems of buildings and structures assigned to *Seismic Design Category* ~~B,~~ ~~C,~~ D, E or F shall be performed in accordance with quality assurance requirements of AISC 341 *as modified by Section 1705A.2.1 of this code.*

~~**Exception:** *Special inspections* the seismic force-resisting systems of buildings and structures assigned to *Seismic Design Category* B or C that are not specifically detailed for seismic resistance, with a response modification coefficient, *R*, of 3 or less, excluding cantilever column systems.~~

1705A.12.1.2 Structural Steel Elements. *Special inspections* of *structural steel elements* in the seismic force resisting systems of buildings and structures assigned to *Seismic Design Category* ~~B,~~

~~C,~~ D, E or F, other than those covered in Section 1705*A*.12.1.1, including struts, collectors, chords, and foundation elements, shall be performed in accordance with quality assurance requirements of AISC 341 *as modified by Section 1705A.2.1 of this code.*

~~**Exception:** *Special inspections* of *structural steel element* are not required in the seismic force-resisting systems of buildings and structures assigned to *Seismic Design Category* B or C with a response modification coefficient, *R*, of 3 or less.~~

1705*A*.12.2 Structural wood. For the seismic force-resisting system of structures assigned to *Seismic Design Category* ~~C,~~ D, E or F:

...

~~**Exception:** *Special inspections* are not required for wood shear walls, shear panels and diaphragms, including nailing, bolting, anchoring and other fastening to other elements of the seismic force-resisting system, where the fastener spacing of the sheathing is more than 4 inches (102 mm) on center.~~

1705*A*.12.3 Cold-formed steel light-frame construction. For the seismic force-resisting system of structures assigned to *Seismic Design Category* ~~C,~~ D, E or F, periodic special inspection shall be required:

...

~~**Exception:** *Special inspections* are not required for cold formed steel light frame shear walls and diaphragms, including screw installation, bolting, anchoring and other fastening to components of the seismic force-resisting system, where either of the following applies:~~

~~1. The sheathing is gypsum board or fiberboard.~~
~~2. The sheathing is wood structural panel or steel sheets on only one side of the shear wall, shear panel or diaphragm assembly and the fastener spacing of the sheathing is more than 4 inches (102 mm) on center.~~

...

1705*A*.12.4 *Special Inspection for Special Seismic Certification.* ~~**Designated seismic systems.**~~ For structures assigned to *Seismic Design Category* ~~C,~~ D, E or F, the special inspector shall examine *equipment and components* ~~designated seismic systems~~ requiring *special* seismic *certification* ~~qualification~~ in accordance with *Section* *1705A.13.3 or* ASCE 7 Section 13.2.2 and verify that the *label*, anchorage and mounting conforms to the *certificate of compliance*.

1705A.12.5 Architectural components. *Periodic special inspection* is required for the erection and fastening of exterior cladding, interior and exterior nonbearing walls, *ceilings*, and interior and exterior veneer in structures assigned to *Seismic Design Category* D, E or F.

~~**Exceptions:** *Periodic special inspection* is not required for the following:~~

~~1. Exterior cladding, interior and exterior nonbearing walls and interior and exterior veneer 30 feet (9144 mm) or less in height above grade or walking surface.~~

~~2. Exterior cladding and interior and exterior veneer weighing 5 psf (24.5 N/m^2) or less.~~

~~3. Interior nonbearing walls weighing 15 psf (73.5 N/m^2) or less.~~

...

1705*A*.12.6 Plumbing, mechanical and electrical components. *Periodic special inspection* of plumbing, mechanical and electrical components shall be required for the following:

1. Anchorage of electrical equipment for emergency or standby power systems in structures assigned to *Seismic Design Category* ~~C,~~ D, E or F.
2. Anchorage of other electrical equipment in structures assigned to *Seismic Design Category D,* E or F.
3. Installation and anchorage of piping systems designed to carry hazardous materials and their associated mechanical units in structures assigned to *Seismic Design Category* ~~C,~~ D, E or F.
4. Installation and anchorage of ductwork designed to carry hazardous materials in structures assigned to *Seismic Design Category* ~~C,~~ D, E or F.
5. Installation and anchorage of vibration isolation systems in structures assigned to *Seismic Design Category* ~~C,~~ D, E or F where the approved *construction documents* require a nominal clearance of 1/4 inch (6.4 mm) or less between the equipment support frame and restraint.

...

1705A.12.8 Seismic isolation *and damping* systems. Periodic special inspection shall be provided for seismic isolation *and damping* systems in ~~seismically isolated~~ structures assigned to Seismic Design Category ~~B, C~~, D, E or F during the fabrication and installation of isolator units and energy dissipation devices. *Continuous special inspection is required for prototype and production testing of isolator units and damping devices.*

~~***1705.12.9 Cold-formed steel special bolted moment frames.*** *Periodic special inspection shall be provided for the installation of cold formed steel special bolted moment frames in the seismic force-resisting systems of structures assigned to Seismic Design Category D, E or F.*~~

1705*A*.13 Testing for seismic resistance. Testing for seismic resistance shall be required as specified in Sections 1705*A*.13.1.1 through 1705*A*.13.4, unless exempted from special inspections by exceptions of Section 1704*A*.2.

1705A.13.1 Structural Steel. Nondestructive testing for seismic resistance shall be in accordance with Section 1705*A*.13.1.1 or 1705*A*.13.1.2, as applicable.

1705A.13.1.1 Seismic Force-Resisting Systems. Nondestructive testing of structural steel in the seismic force resisting systems of buildings and structures assigned to Seismic Design Category ~~B, C,~~ D, E or F shall be performed in accordance with the quality assurance requirements of AISC 341.

~~**Exception:** Nondestructive testing is not required in the seismic force-resisting systems of buildings and structures assigned to *Seismic Design Category* B or C that are not specifically detailed for seismic resistance, with a response modification coefficient, *R*, of 3 or less, excluding cantilever column systems.~~

1705A.13.1.2 Structural Steel Elements. Nondestructive testing of *structural steel elements* in the seismic force resisting systems of buildings and structures assigned to *Seismic design Category* ~~B, C,~~ D, E or F, other than those covered in Section 1705*A*.13.1.1, including struts, collectors, chords, and foundation elements, shall be performed in accordance with quality assurance requirements of AISC 341.

~~**Exception:** Nondestructive testing of *structural steel element* is not required in the seismic force-resisting systems of buildings and structures assigned to *Seismic Design Category* B or C with a response modification coefficient, *R*, of 3 or less.~~

1705A.13.2 Nonstructural Components. For structures assigned to *Seismic design Category* ~~B, C,~~ D, E or F, where requirements of Section 13.2.1 of ASCE 7 for non-structural components, supports, or attachments are met by *manufacturer's certification* ~~seismic qualification~~ as specified in Item 2 therein, the *registered design professional* shall specify on the *approved construction documents* the requirements for seismic *certification* ~~qualification~~ by analysis~~,~~ *or* testing. ~~or experience data.~~ *Certificates of compliance* for the ~~seismic qualification~~ *manufacturer's certification* shall be submitted to the building official as specified in Section 1704*A*.5.

Seismic sway braces satisfying requirements of FM 1950 shall be deemed to satisfy the requirements of this Section. Component tests shall be supplemented by assembly tests, when required by the building official.

1705A.13.3 ***Special Seismic Certification.*** ~~**Designated Seismic System.**~~ For structures assigned to *Seismic design Category* ~~C,~~ D, E or F, ~~and with *designated seismic systems*~~ *equipment and components* that are subject to the requirements of Section 13.2.2 of ASCE 7 for *special seismic* certification, the *registered design professional* shall specify on the *approved construction documents* the requirements to be met by analysis~~,~~ *or* testing ~~or experience data~~ as specified therein. *Certificate of compliance* documenting that the requirements are met shall be submitted to the building official as specified in Section 1704*A*.5.

Active or energized equipment and components shall be certified exclusively on the basis of approved shake table testing in accordance with ICC-ES AC 156. Minimum of two equipment/components shall be tested for a product line with similar structural configuration. Where a range of products are tested, the two equipment/components shall be either the largest and a small unit, or approved alternative representative equipment/components.

Exception: When a single product (and not a product line with more than one product with variations) is certified and manufacturing process is ISO 9001 certified, one test shall be permitted.

For a multi-component system, where active or energized components are certified by tests, connecting elements, attachments, and supports can be justified by supporting analysis.

1705A.13.3.1 ~~***1705A.12.4.1***~~ ~~[Reserved for OSHPD]~~

1705A.13.4 Seismic isolation *and damping* systems. Seismic isolation *and damping* systems in ~~seismically isolated~~ structures assigned to Seismic Design Category ~~B, C,~~ D, E or F shall be tested in accordance with Section 17.8 *and 18.9* of ASCE 7.

Prototype and production testing and associated acceptance criteria for isolator units and damping devices shall be subject to preapproval by the building official. Testing exemption for similar units shall require approval by the building official.

...

1705A.19 ~~***1705A.18***~~ ***Shotcrete.*** *All shotcrete work shall be continuously inspected during placing by an approved agency* ~~*inspector specially approved for that purpose by the enforcement agency.*~~ *The special shotcrete inspector shall check the materials, placing equipment, details of construction and construction procedure. The* ~~*inspector*~~ *an approved agency shall furnish a verified report that of his or her own personal knowledge the work covered by the report has been performed and materials used and installed in every material respect in compliance with the duly approved plans and specifications.*

1705A.19.1 ~~***1705A.18.1***~~ ***Visual examination for structural soundness of in-place shotcrete.*** *Completed shotcrete work shall be checked visually for reinforcing bar embedment, voids, rock pockets, sand streaks and similar deficiencies by examining a minimum of three 3-inch (76 mm) cores taken from three areas chosen by the design engineer which represent the worst congestion of reinforcing bars occurring in the project. Extra reinforcing bars may be added to noncongested areas and cores may be taken from these areas. The cores shall be examined by the special inspector and a report submitted to the enforcement agency prior to final approval of the shotcrete.*

Exception: *Shotcrete work fully supported on earth, minor repairs, and when, in the opinion of the enforcement agency, no special hazard exists.*

...

[All existing amendments that are not revised above shall continue without any change]

Notation for [DSA-SS]
Authority: Education Code § 17310 and 81142, and H&S Code §16022.
Reference: Education Code §§ 17280 through 17317, and 81130 through 81147, and Health and Safety Code §§16000 through 16023.

Notation for [DSA-SS/CC]
Authority: Education Code § 81053.
Reference: Education Code §§ 81052, 81053, and 81130 through 81147.

CHAPTER 18*A*

SOILS AND FOUNDATIONS

Adopt and/or codify chapter as amended below:

PROPOSED ADOPTION	DSA-SS	DSA-SS/CC	Comments
Adopt entire chapter WITHOUT AMENDMENTS			
Adopt entire chapter as amended	X	X	
Adopt only those sections listed below			

[All existing California amendments that are not revised below shall continue without change]

SECTION 1801*A*

GENERAL

1801*A*.1 Scope. The provisions of this chapter shall apply to building and foundation systems.

~~*Refer to Appendix J, Grading, for requirements governing grading, excavation and earthwork construction, including fills and embankments.*~~

1801A.1.1 Application. *The scope of application of Chapter 18A is as follows:*

1. Structures regulated by the Division of the State Architect—Structural Safety, which include

those applications listed in Section 1.9.2.1 (DSA-SS), and 1.9.2.2 (DSA-SS/CC). These applications include public elementary and secondary schools, community colleges and state-owned or state-leased essential services buildings

2. *[Reserved for OSHPD]*

1801A.1.2 Amendments in this chapter. *DSA –SS & DSA –SS/CC adopt this chapter and all amendments.*

Exception: *Amendments adopted by only one agency appear in this chapter preceded with the appropriate acronym of the adopting agency, as follows:*

1. *Division of the State Architect-Structural Safety:*
   [DSA-SS] *For applications listed in Section 1.9.2.1.*
   [DSA-SS/CC] *For applications listed in Section 1.9.2.2.*

2. *[Reserved for OSHPD]*

1801A.1.3 Reference to other chapters.

1801A.1.3.1 ***[DSA-SS/CC]*** *Where reference within this chapter is made to sections in Chapters 16A, 19A, 21A, and 22A, ~~and 34A~~, the provisions in Chapters 16, 19, 21, and 22, ~~and 34~~ respectively shall apply instead.*

...

SECTION 1803A
GEOTECHNICAL INVESTIGATIONS

1803A.1 General. Geotechnical investigations shall be conducted in accordance with Section 1803A.2 and reported in accordance with Section ~~1803.6~~ *1803A.7*. ~~Where required by the *building official* or where geotechnical investigations involve in-situ testing, laboratory testing or engineering calculations, such investigations shall be conducted by a *registered design professional*.~~ *The classification and investigation of the soil shall be made under the responsible charge of a California registered geotechnical engineer. All recommendations contained in geotechnical and geohazard reports shall be subject to the approval of the enforcement agency. All reports shall be prepared and signed by a registered geotechnical engineer,*

certified engineering geologist, and a registered geophysicist, where applicable.

1803*A*.2 Investigations required. Geotechnical investigations shall be conducted in accordance with Sections 1803*A*.3 through ~~1803*A*.5~~ *1803A.6.*

Exceptions: ~~The *building official* shall be permitted to waive the requirement for a geotechnical investigation where satisfactory data from adjacent areas is available that demonstrates an investigation is not necessary for any of the conditions in Sections 1803.5.1 through 1803.5.6 and Sections 1803.5.10 and 1803.5.11.~~

1. *Geotechnical reports are not required for one-story, wood-frame and light-steel-frame buildings of Type II or Type V construction and 4,000 square feet (371 m^2) or less in floor area, not located within Earthquake Fault Zones or Seismic Hazard Zones as shown in the most recently published maps from the California Geological Survey (CGS) or in seismic hazard zones as defined in the Safety Element of the local General Plan. Allowable foundation and lateral soil pressure values may be determined from Table 1806A.2.*

2. *A previous report for a specific site may be resubmitted, provided that a reevaluation is made and the report is found to be currently appropriate.*

...

1803*A*.3 Basis of investigation. Soil classification shall be based on observation and any necessary tests of the materials disclosed by borings, test pits or other subsurface exploration made in appropriate locations. Additional studies shall be made as necessary to evaluate slope stability, soil strength, position and adequacy of load-bearing soils, the effect of moisture variation on soil-bearing capacity, compressibility, liquefaction and expansiveness.

1803*A*.3.1 Scope of investigation. The scope of the geotechnical investigation including the number and types of borings or soundings, the equipment used to drill or sample, the in-situ testing equipment and the laboratory testing program shall be determined by a *registered design professional.*

There shall not be less than one boring or exploration shaft for each 5,000 square feet (465 m^2) of building area at the foundation level with a minimum of two provided for any one

building. A boring may be considered to reflect subsurface conditions relevant to more than one building, subject to the approval of the enforcement agency.

Borings shall be of sufficient size to permit visual examination of the soil in place or, in lieu thereof, cores shall be taken.

Borings shall be of sufficient depth and size to adequately characterize sub-surface conditions.

...

1803*A*.5.4 Ground-water table. A subsurface soil investigation shall be performed to determine whether the existing ground-water table is above or within 5 feet (1524 mm) below the elevation of the lowest floor level where such floor is located below the finished ground level adjacent to the foundation.

~~**Exception:** A subsurface soil investigation to determine the location of the ground-water table shall not be required where waterproofing is provided in accordance with Section 1805.~~

...

1803A.6. Geohazard Reports. *Geohazard reports shall be required for all proposed construction.*

Exceptions:

1. *Reports are not required for one-story, wood-frame and light-steel-frame buildings of Type II or Type V construction and 4,000 square feet (371m^2) or less in floor area, not located within Earthquake Fault Zones or Seismic Hazard Zones as shown in the most recently published maps from the California Geological Survey (CGS) or in seismic hazard zones as defined in the Safety Element of the local General Plan; nonstructural, associated structural or voluntary structural alterations, and incidental structural additions or alterations, and structural repairs for other than earthquake damage.*

2. *A previous report for a specific site may be resubmitted, provided that a reevaluation is made and the report is found to be currently appropriate.*

The purpose of the geohazard report shall be to identify geologic and seismic conditions that may require project mitigations. The reports shall contain data which provide an assessment of the nature of the site and potential for earthquake damage based on appropriate investigations of the regional and site geology, project foundation conditions and the potential seismic shaking at the site. The report shall be prepared by a California-certified engineering geologist in consultation with a California-registered geotechnical engineer.

The preparation of the geohazard report shall consider the most recent CGS Note 48: Checklist for the Review of Engineering Geology and Seismology Reports for California Public School, Hospitals, and Essential Services Buildings. In addition, the most recent version of CGS Special Publication 42, Fault Rupture Hazard Zones in California, shall be considered for project sites proposed within an Alquist-Priolo Earthquake Fault Zone. The most recent version of CGS Special Publication 117, Guidelines for Evaluating and Mitigating Seismic Hazards in California, shall be considered for project sites proposed within a Seismic Hazard Zone. All conclusions shall be ~~fully~~ supported by satisfactory data and analysis.

In addition to requirements in Sections 1803A.5.11 and 1803A.5.12, the report shall include, but shall not be limited to, the following:

1. *Site Geology.*

2. *Evaluation of the known active and potentially active faults, both regional and local.*

3. *Ground-motion parameters, as required by Sections 1613A, 1616A, & ASCE 7.*

The three Next Generation Attenuation (NGA) relations used for the 2008 USGS seismic hazards maps for Western United States (WUS) shall be utilized to determine the site-specific ground motion. When supported by data and analysis, other NGA (NGA West 1) relations, that were not used for the 2008 USGS maps, shall be permitted as additions or substitutions. No fewer than three NGA relations shall be utilized.

1803A.7 ~~**1803.6**~~ ***Geotechnical*** **Reporting.** Where geotechnical investigations are required, a written report of the investigations shall be submitted to the *building official* by the permit applicant at the time of *permit* application. *The geotechnical report shall provide completed evaluations of the foundation conditions of the site and the potential geologic/seismic hazards affecting the site. The geotechnical report shall include, but shall not be limited to, site-specific evaluations of design criteria related to the nature and extent of foundation materials, groundwater conditions, liquefaction potential, settlement potential and slope stability. The report shall contain the results of the analyses of problem areas identified in the geohazard report. The geotechnical report shall incorporate estimates of the characteristics of site ground motion provided in the geohazard report.* This geotechnical report shall include, but need not be limited to, the following information:

1. A plot showing the location of the soil investigations.
2. A complete record of the soil boring and penetration test logs and soil samples.
3. A record of the soil profile.
4. Elevation of the water table, if encountered. *Historic high ground water elevations shall be addressed in the report to adequately evaluate liquefaction and settlement potential.*
5. Recommendations for foundation type and design criteria, including but not limited to: bearing capacity of natural or compacted soil; provisions to mitigate the effects of expansive soils; mitigation of the effects of liquefaction, differential settlement and varying soil strength; and the effects of adjacent loads.
6. Expected total and differential settlement.
7. Deep foundation information in accordance with Section 1803*A*.5.5.
8. Special design and construction provisions for foundations of structures founded on expansive soils, as necessary.
9. Compacted fill material properties and testing in accordance with Section 1803*A*.5.8.
10. Controlled low-strength material properties and testing in accordance with Section 1803*A*.5.9.
11. *The report shall consider the effects of stepped footings addressed in Section 1809A.3.*
12. *The report shall consider the effects of seismic hazards in accordance with Section 1803A.6 and shall incorporate the findings of the associated geohazard report.*

...

1803A.8 Geotechnical peer review. [DSA-SS and DSA-SS/CC] *When alternate foundations designs or ground improvements are employed or where slope stabilization is required, a qualified peer review by a California-licensed geotechnical engineer, in accordance with Section 322 of Part 10, Title 24,*

C.C.R. ~~Section 3422~~, may be required by the enforcement agency. In Section 322 of Part 10, Title 24, C.C.R. ~~Section 3422~~, where reference is made to structural or seismic-resisting system, it shall be replaced with geotechnical, foundation, or ground improvement, as appropriate.

...

SECTION 1805A
DAMPPROOFING AND WATERPROOFING

1805A.1 General. Walls or portions thereof that retain earth and enclose interior spaces and floors below grade shall be waterproofed and damp proofed in accordance with this section, with the exception of those spaces containing groups other than residential and institutional where such omission is not detrimental
to the building or occupancy.

Ventilation for crawl spaces shall comply with Section 1203.4.

...

1805A.2 Dampproofing. Where hydrostatic pressure will not occur as determined by Section 1803A.5.4, floors and walls ~~for other than wood foundation systems~~ shall be dampproofed in accordance with this section. ~~Wood foundation systems shall be constructed in accordance with AF&PA PWF.~~

...

SECTION 1807A
FOUNDATION WALLS, RETAINING WALLS AND EMBEDDED POSTS AND POLES

1807A.1 Foundation walls. Foundation walls shall be designed and constructed in accordance with Sections 1807A.1.1 through 1807A.1.6. Foundation walls shall be supported by foundations designed in accordance with Section 1808A.

1807A.1.1 Design lateral soil loads. Foundation walls shall be designed for the lateral soil loads ~~set~~

~~forth in Section 1610*A*.~~ *determined by a geotechnical investigation in accordance with Section 1803A.*

1807*A*.1.2 Unbalanced backfill height. Unbalanced backfill height is the difference in height between the exterior finish ground level and the lower of the top of the concrete footing that supports the foundation wall or the interior finish ground level. Where an interior concrete slab on grade is provided and is in contact with the interior surface of the foundation wall, the unbalanced backfill height shall be permitted to be measured from the exterior finish ground level to the top of the interior concrete slab.

1807*A*.1.3 Rubble stone foundation walls. *Not permitted by DSA –SS, DSA –SS/CC.* ~~Foundation walls of rough or random rubble stone shall not be less than 16 inches (406 mm) thick. Rubble stone shall not be used for foundation walls of structures assigned to *Seismic Design Category* C, D, E or F.~~

1807*A*.1.4 Permanent wood foundation systems. *Not permitted by DSA –SS, DSA – SS/CC.* ~~Permanent wood foundation systems shall be designed and installed in accordance with AF&PA/PWF. Lumber and plywood shall be treated in accordance with AWPA U1 (Commodity Specification A, Use Category 4B and Section 5.2) and shall be identified in accordance with Section 2303*A*.1.8.1.~~

1807*A*.1.5 Concrete and masonry foundation walls. Concrete and masonry foundation walls shall be designed in accordance with Chapter 19*A* or 21*A*, as applicable.

~~**Exception:** Concrete and masonry foundation walls shall be permitted to be designed and constructed in accordance with Section 1807.1.6.~~

~~**1807.1.6 Prescriptive design of concrete and masonry foundation walls.** Concrete and masonry foundation walls that are laterally supported at the top and bottom shall be permitted to be designed and constructed in accordance with this section.~~

~~**1807.1.6.1 Foundation wall thickness.** The thickness of prescriptively designed foundation walls shall not be less than the thickness of the wall supported, except that foundation walls of at least 8-inch (203 mm) nominal width shall be permitted to support brick veneered frame walls and 10-inch-wide (254 mm) cavity walls provided the requirements of Section 1807.1.6.2 or 1807.1.6.3 are met.~~

~~**1807.1.6.2 Concrete foundation walls.** Concrete foundation walls shall comply with the following:~~

~~1. The thickness shall comply with the requirements of Table 1807.1.6.2.~~
~~2. The size and spacing of vertical reinforcement shown in Table 1807.1.6.2 are based on the use of reinforcement with a minimum yield strength of 60,000 psi (414 Mpa). Vertical reinforcement with a minimum yield strength of 40,000 psi (276 Mpa) or 50,000 psi (345 Mpa) shall be permitted, provided the same size bar is used and the spacing shown in the table is reduced by multiplying the spacing by 0.67 or 0.83, respectively.~~

~~**TABLE 1807.1.6.2**~~
~~**CONCRETE FOUNDATION WALLS[b, c]**~~

~~(Deleted Table not shown for clarity)~~

~~3. Vertical reinforcement, when required, shall be placed nearest the inside face of the wall a distance, *d*, from the outside face (soil face) of the wall. The distance, *d*, is equal to the wall thickness, *t*, minus 1.25 inches (32 mm) plus one-half the bar diameter, *db*, [$d = t - (1.25 + db / 2)$]. The reinforcement shall be placed within a tolerance of ± 3/8 inch (9.5 mm) where *d* is less than or equal to 8 inches (203 mm) or ± 1/2 inch (12.7 mm) where *d* is greater than 8 inches (203 mm).~~
~~4. In lieu of the reinforcement shown in Table 1807.1.6.2, smaller reinforcing bar sizes with closer spacings that provide an equivalent cross-sectional area of reinforcement per unit length shall be permitted.~~
~~5. Concrete cover for reinforcement measured from the inside face of the wall shall not be less than ¾ inch (19.1 mm). Concrete cover for reinforcement measured from the outside face of the wall shall not be less than 11/2 inches (38 mm) for No. 5 bars and smaller, and not less than 2 inches (51 mm) for larger bars.~~
~~6. Concrete shall have a specified compressive strength, *fc'*, of not less than 2,500 psi (17.2 MPa).~~
~~7. The unfactored axial load per linear foot of wall shall not exceed 1.2 *t fc'* where *t* is the specified wall thickness in inches.~~

~~**1807.1.6.2.1 Seismic requirements.** Based on the *seismic design category* assigned to the~~

~~structure in accordance with Section 1613, concrete foundation walls designed using Table 1905.1.7 shall be subject to the following limitations:~~

~~1. *Seismic Design Categories* A and B. No additional seismic requirements, except provide reinforcement around openings in accordance with Section 1909.6.3.~~

~~2. *Seismic Design Categories* C, D, E and F. Tables shall not be used except as allowed for plain concrete members in Section 1908.1.8.~~

~~**1807.1.6.3 Masonry foundation walls.** Masonry foundation walls shall comply with the following:~~

~~1. The thickness shall comply with the requirements of Table 1807.1.6.3(1) for plain masonry walls or Table 1807.1.6.3(2), 1807.1.6.3(3) or 1807.1.6.3(4) for masonry walls with reinforcement.~~

~~2. Vertical reinforcement shall have a minimum yield strength of 60,000 psi (414 Mpa).~~

~~3. The specified location of the reinforcement shall equal or exceed the effective depth distance, *d*, noted in Tables 1807.1.6.3(2), 1807.1.6.3(3) and 1807.1.6.3(4) and shall be measured from the face of the exterior (soil) side of the wall to the center of the vertical reinforcement. The reinforcement shall be placed within the tolerances specified in TMS 602/ACI 530.1/ASCE 6, Article 3.3.B.11 of the specified location.~~

~~**TABLE 1807.1.6.3(1)**~~
~~**PLAIN MASONRY FOUNDATION WALLS**[a,b,c]~~

~~(Deleted Table not shown for clarity)~~

~~4. Grout shall comply with Section 2103.12.~~

~~5. Concrete masonry units shall comply with ASTM C 90.~~

~~6. Clay masonry units shall comply with ASTM C 652 for hollow brick, except compliance with ASTM C 62 or ASTM C 216 shall be permitted where solid masonry units are installed in accordance with Table 1807.1.6.3(1) for plain masonry.~~

~~7. Masonry units shall be laid in running bond and installed with Type M or S mortar in accordance with Section 2103.2.1.~~

~~8. The unfactored axial load per linear foot of wall shall not exceed $1.2\,t\,F'_m$ where t is the specified wall thickness in inches and F'_m is the specified compressive strength of masonry in~~

~~pounds per square inch.~~

~~9. At least 4 inches (102 mm) of solid masonry shall be provided at girder supports at the top of hollow masonry unit foundation walls.~~

~~10. Corbeling of masonry shall be in accordance with Section 2104.2. Where an 8-inch (203 mm) wall is corbeled, the top corbel shall not extend~~

~~**TABLE 1807.1.6.3(2)**~~

~~**8-INCH MASONRY FOUNDATION WALLS WITH REINFORCEMENT WHERE d _ 5 INCHES[a,b,c]**~~

~~(Deleted Table not shown for clarity)~~

~~higher than the bottom of the floor framing and shall be a full course of headers at least 6 inches (152 mm) in length or the top course bed joint shall be tied to the vertical wall projection. The tie shall be W2.8 (4.8 mm) and spaced at a maximum horizontal distance of 36 inches (914 mm). The hollow space behind the corbelled masonry shall be filled with mortar or grout.~~

~~**1807.1.6.3.1 Alternative foundation wall reinforcement.** In lieu of the reinforcement provisions for masonry foundation walls in Table 1807.1.6.3(2), 1807.1.6.3(3) or 1807.1.6.3(4), alternative reinforcing bar sizes and spacings having an equivalent cross-sectional area of reinforcement per linear foot (mm) of wall shall be permitted to be used, provided the spacing of reinforcement does not exceed 72 inches (1829 mm) and reinforcing bar sizes do not exceed No. 11.~~

~~**1807.1.6.3.2 Seismic requirements.** Based on the *seismic design category* assigned to the structure in accordance with Section 1613, masonry foundation walls designed using Tables 1807.1.6.3(1) through 1807.1.6.3(4) shall be subject to the following limitations:~~

~~1. *Seismic Design Categories* A and B. No additional seismic requirements.~~

~~2. *Seismic Design Category* C. A design using Tables 1807.1.6.3(1) through 1807.1.6.3(4) is~~

~~**TABLE 1807.1.6.3(3)**~~

~~**10-INCH MASONRY FOUNDATION WALLS WITH REINFORCEMENT WHERE d _ 6.75 INCHES[a,b,c]**~~

~~(Deleted Table not shown for clarity)~~

~~subject to the seismic requirements of Section 7.4.3 of TMS 402/ACI 530/ASCE 5.~~

~~3. *Seismic Design Category* D. A design using Tables 1807.1.6.3(2) through 1807.1.6.3(4) is subject to the seismic requirements of Section 7.4.4 of TMS 402/ACI 530/ASCE 5.~~

~~4. *Seismic Design Categories* E and F. A design using Tables 1807.1.6.3(2) through 1807.1.6.3(4) is subject to the seismic requirements of Section 7.4.5 of TMS 402/ACI 530/ASCE 5.~~

~~**TABLE 1807.1.6.3(4)**~~

~~**12 INCH MASONRY FOUNDATION WALLS WITH REINFORCEMENT WHERE d _ 8.75 INCHES**[a,b,c]~~

~~(Deleted Table not shown for clarity)~~

1807*A*.2 Retaining walls. Retaining walls shall be designed in accordance with Sections 1807*A*.2.1 through 1807*A*.2.3. *Freestanding cantilever walls shall be design in accordance with Section 1807A.2.4.*

1807*A*.2.1 General. Retaining walls shall be designed to ensure stability against overturning, sliding, excessive foundation pressure and water uplift. Where a keyway is extended below the wall base with the intent to engage passive pressure and enhance sliding stability, lateral soil pressures on both sides of the keyway shall be considered in the sliding analysis.

1807*A*.2.2 Design lateral soil loads. Retaining walls shall be designed for the lateral soil loads ~~set forth in Section 1610.~~ *determined by a geotechnical investigation in accordance with Section 1803A and shall not be less than eighty percent of the lateral soil loads determined in accordance with Section 1610A. For use with the load combinations, lateral soil loads due to gravity loads surcharge shall be considered gravity loads and seismic earth pressure increases due to earthquake shall be considered as seismic loads.*

...

1807A.2.4 Freestanding Cantilever Walls. *A stability check against the possibility of overturning shall be performed for isolated spread footings which support freestanding cantilever walls. The stability check shall be made by dividing R_p used for the wall by 2.0. The allowable soil pressure may be doubled for this evaluation.*

Exception: *For overturning about the principal axis of rectangular footings with symmetrical vertical loading and the design lateral force applied, a triangular or trapezoidal soil pressure distribution which covers the full width of the footing will meet the stability requirement.*

...

SECTION 1808*A*
FOUNDATIONS

1808*A*.1 General. Foundations shall be designed and constructed in accordance with Sections 1808*A*.2 through 1808A.9. Shallow foundations shall also satisfy the requirements of Section 1809A. Deep foundations shall also satisfy the requirements of Section 1810*A*.

1808*A*.2 Design for capacity and settlement. Foundations shall be so designed that the allowable bearing capacity of the soil is not exceeded, and that differential settlement is minimized. Foundations in areas with expansive soils shall be designed in accordance with the provisions of Section 1808*A*.6.

The enforcing agency may require an analysis of foundation elements to determine subgrade deformations in order to evaluate their effect on the superstructure, including story drift.

...

1808*A*.8 Concrete foundations. The design, materials and construction of concrete foundations shall comply with Sections1808*A*.8.1 through 1808*A*.8.6 and the provisions of Chapter 19*A*.

~~Exception: Where concrete footings supporting walls of light-frame construction are designed in accordance with Table 1809.7, a specific design in accordance with Chapter 19 is not required.~~

...

TABLE 1808*A*.8.1

MINIMUM SPECIFIED COMPRESSIVE STRENGTH f′ c OF CONCRETE OR GROUT

FOUNDATION ELEMENT OR CONDITION	SPECIFIED COMPRESSIVE STRENGTH, f ′c
~~1. Foundations for structures assigned to Seismic Design Category A, B or C~~	~~2,500 psi~~
~~2a. Foundations for Group R or U occupancies of light-frame construction, two stories or less in height, assigned to Seismic Design Category D, E or F~~	~~2,500 psi~~
~~2b~~ *1.*Foundations for other structures assigned to Seismic Design Category D, E or F	3,000 psi
~~3~~ *2.* Precast nonprestressed driven piles	4,000 psi
~~4~~ *3.* Socketed drilled shafts	4,000 psi
~~5~~ *4.* Micropiles	4,000 psi
~~6~~ *5.* Precast prestressed driven piles	5,000 psi

For SI: 1 pound per square inch = 0.00689MPa.

...

1808*A*.8.6 Seismic requirements. See Section 1905*A* for additional requirements for foundations of structures assigned to *Seismic Design Category* ~~C,~~ D, E or F.

For structures assigned to *Seismic Design Category* D, E or F, provisions of Sections 18.13 of ACI 318 shall apply where not in conflict with the provisions of Sections 1808*A* through 1810*A*.

~~**Exceptions:**~~

~~1. Detached one- and two-family dwellings of light-frame construction and two stories or less above~~

~~*grade plane* are not required to comply with the provisions of Section 18.13 od ACI 318.~~

~~2. Section 18.13.4.3(a) of ACI 318 shall not apply.~~

...

SECTION 1809*A*
SHALLOW FOUNDATIONS

1809*A*.1 General. Shallow foundations shall be designed and constructed in accordance with Sections 1809*A*.2 through 1809*A*.13.

1809*A*.2 Supporting soils. Shallow foundations shall be built on undisturbed soil, compacted fill material or controlled low-strength material (CLSM). Compacted fill material shall be placed in accordance with Section 1804*A*.5. CLSM shall be placed in accordance with Section 1804*A*.6.

1809*A*.3 Stepped footings. The top surface of footings shall be level. The bottom surface of footings shall be permitted to have a slope not exceeding one unit vertical in 10 units horizontal (10-percent slope). Footings shall be stepped where it is necessary to change the elevation of the top surface of the footing or where the surface of the ground slopes more than one unit vertical in 10 units horizontal (10-percent slope).

Individual steps in continuous footings shall not exceed 18 inches (457 mm) in height and the slope of a series of such steps shall not exceed 1 unit vertical to 2 units horizontal (50% slope) unless otherwise recommended by a geotechnical report. The steps shall be detailed on the drawings. The local effects due to the discontinuity of the steps shall be considered in the design of the foundation.

...

1809*A*.7 Prescriptive footings for light-frame construction. *Not permitted by DSA-SS, DSA-SS/CC.* ~~Where a specific design is not provided, concrete or masonry-unit footings supporting walls of light-frame construction shall be permitted to be designed in accordance with Table 1809.7.~~

~~TABLE 1809.7~~

~~PRESCRIPTIVE FOOTINGS SUPPORTING WALLS OFLIGHT-FRAME CONSTRUCTION[a,b,c,d,e]~~

~~(Table not shown for clarity)~~

1809*A*.8 Plain concrete footings. *Not permitted by DSA-SS, DSA-SS/CC.* ~~The edge thickness of plain concrete footings supporting walls of other than light-frame construction shall not be less than 8 inches (203 mm) where placed on soil or rock.~~

~~**Exception:** For plain concrete footings supporting Group R-3 occupancies, the edge thickness is permitted to be 6 inches (152 mm), provided that the footing does not extend beyond a distance greater than the thickness of the footing on either side of the supported wall.~~

1809*A*.9 Masonry-unit footings. *Not permitted by DSA-SS, DSA-SS/CC.* ~~The design, materials and construction of masonry-unit footings shall comply with Sections 1809.9.1 and 1809.9.2, and the provisions of Chapter 21.~~

~~**Exception:** Where a specific design is not provided, masonry-unit footings supporting walls of light-frame construction shall be permitted to be designed in accordance with Table 1809.7.~~

~~**1809.9.1 Dimensions.** Mansonry-unit footings shall be laid in Type M or S mortar complying with Section 2103.8 and the depth shall not be less than twice the projection beyond the wall, pier or column. The width shall not be less than 8 inches (203 mm) wider than the wall supported thereon.~~

~~**1809.9.2 Offsets.** The maximum offset of each course in brick foundation walls stepped up from the footings shall be 11/2 inches (38 mm) where laid in single courses, and 3 inches (76 mm) where laid in double courses.~~

1809*A*.10 *Reserved.* ~~**Pier and curtain wall foundations.** Except in *Seismic Design Categories* D, E and F, pier and curtain wall foundations shall be permitted to be used to support light-frame construction not more than two *stories above grade plane*, provided the following requirements are met:~~

~~1. All load-bearing walls shall be placed on continuous concrete footings bonded integrally with the *exterior wall* footings.~~

~~2. The minimum actual thickness of a load-bearing masonry wall shall not be less than 4 inches (102 mm) nominal or 35/8 inches (92 mm) actual thickness, and shall be bonded integrally with piers spaced 6 feet (1829 mm) on center (o.c.).~~

~~3. Piers shall be constructed in accordance with Chapter 21 and the following:~~

~~3.1. The unsupported height of the masonry piers shall not exceed 10 times their least dimension.~~

~~3.2. Where structural clay tile or hollow concrete masonry units are used for piers supporting beams and girders, the cellular spaces shall be filled solidly with concrete or Type M or S mortar.~~

~~**Exception:** *Unfilled hollow piers shall be permitted where the unsupported height of the pier is not more than four times its least dimension.*~~

~~3.3. Hollow piers shall be capped with 4 inches (102 mm) of solid masonry or concrete or the cavities of the top course shall be filled with concrete or grout.~~

~~4. The maximum height of a 4-inch (102 mm) load-bearing masonry foundation wall supporting wood frame walls and floors shall not be more than 4 feet (1219 mm) in height.~~

~~5. The unbalanced fill for 4-inch (102 mm) foundation walls shall not exceed 24 inches (610 mm) for solid masonry, nor 12 inches (305 mm) for hollow masonry.~~

...

1809A.12 Timber footings. *Not permitted by DSA-SS, DSA-SS/CC.* ~~Timber footings shall be permitted for buildings of Type V construction and as otherwise *approved* by the *building official*. Such footings shall be treated in accordance with AWPA U1 (Commodity Specification A, Use Category 4B). Treated timbers are not required where placed entirely below permanent water level, or where used as capping for wood piles that project above the water level over submerged or marsh lands. The compressive stresses perpendicular to grain in untreated timber footings supported upon treated piles shall not exceed 70 percent of the allowable stresses for the species and grade of timber as specified in the AF&PA NDS.~~

...

1809A.14 Pipes and Trenches. *Unless otherwise recommended by the soils report, open or backfilled trenches parallel with a footing shall not be below a plane having a downward slope of 1 unit vertical to 2 units horizontal (50% slope) from a line 9 inches (229 mm) above the bottom edge of the footing, and not closer than 18 inches (457 mm) from the face of such footing.*

Where pipes cross under footings, the footings shall be specially designed. Pipe sleeves shall be

provided where pipes cross through footings or footing walls and sleeve clearances shall provide for possible footing settlement, but not less than 1 inch (25 mm) all around pipe.

Exception: *Alternate trench locations and pipe clearances shall be permitted when approved by registered design professional in responsible charge and the enforcement agent.*

1809A.15 Grade beams: [DSA-SS, DSA-SS/CC] *For structures assigned to Seismic Design Category D, E or F, grade beams in shallow foundations shall comply with Section 1810A.3.12.*

SECTION 1810*A*
DEEP FOUNDATIONS

1810*A*.1 General. Deep foundations shall be analyzed, designed, detailed and installed in accordance with Sections 1810*A*.1 through 1810*A*.4.

...

1810*A*.3.1.5 Helical piles. Helical piles shall be designed and manufactured in accordance with accepted engineering practice to resist all stresses induced by installation into the ground and service loads.

1810A.3.1.5.1 Helical Piles Seismic Requirements. *For structures assigned to Seismic Design Category D, E or F, capacities of helical piles shall be determined in accordance with Section 1810A.3.3 by at least two project specific pre-production tests for each soil profile, size and depth of helical pile. At least two percent of all production piles shall be proof tested to the load determined in accordance with Section 1616A.1.16.~~1615A.1.10.~~*

Helical piles shall satisfy corrosion resistance requirements of ICC-ES AC 358. In addition, all helical pile materials that are subject to corrosion shall include at least 1/16" corrosion allowance.

Helical piles shall not be considered as carrying any horizontal loads.

...

1810*A*.3.2 Materials. The materials used in deep foundation elements shall satisfy the requirements of Sections 1810*A*.3.2.1 through 1810*A*.3.2.8, as applicable.

...

~~**1810.3.2.1.2 ACI 318 Equation (25.8.3.3).** Where this chapter requires detailing of concrete deep foundation elements in accordance with Section 18.7.5.4 of ACI 318, compliance with Equation (25.8.3.3) of ACI 318 shall not be required.~~

...

1810*A*.3.2.4 Timber. *Not permitted by DSA-SS, DSASS/CC.* ~~Timber deep foundation elements shall be designed as piles or poles in accordance with AF&PA NDS. Round timber elements shall conform to ASTM D 25. Sawn timber elements shall conform to DOC PS-20.~~

~~**1810.3.2.4.1 Preservative treatment.** Timber deep foundation elements used to support permanent structures shall be treated in accordance with this section unless it is established that the tops of the untreated timber elements will be below the lowest ground-water level assumed to exist during the life of the structure. Preservative and minimum final retention shall be in accordance with AWPA U1 (Commodity Specification E, Use Category 4C) for round timber elements and AWPA U1 (Commodity Specification A, Use Category 4B) for sawn timber elements. Preservative-treated timber elements shall be subject to a quality control program administered by an *approved agency*. Element cutoffs shall be treated in accordance with AWPA M4.~~

...

1810A.3.3.1.2 Load tests. Where design compressive loads are greater than those determined using the allowable stresses specified in Section 1810A.3.2.6, where the design load for any deep foundation element is in doubt, *where driven deep foundation elements are installed by means other than a pile hammer,* or where cast-in-place deep foundation elements have an enlarged base formed either by compacting concrete or by driving a precast base, control test elements shall be tested in accordance with ASTM D 1143 *including Procedure G: Cyclic Loading Test* or ASTM D 4945. At least one element shall be load tested in each area of uniform subsoil conditions. Where required by the building official,

additional elements shall be load tested where necessary to establish the safe design capacity. The resulting allowable loads shall not be more than one-half of the ultimate axial load capacity of the test element as assessed by one of the published methods listed in Section 1810A.3.3.1.3 with consideration for the test type, duration and subsoil. The ultimate axial load capacity shall be determined by a registered design professional with consideration given to tolerable total and differential settlements at design load in accordance with Section 1810A.2.3. In subsequent installation of the balance of deep foundation elements, all elements shall be deemed to have a supporting capacity equal to that of the control element where such elements are of the same type, size and relative length as the test element; are installed using the same or comparable methods and equipment as the test element; are installed in similar subsoil conditions as the test element; and, for driven elements, where the rate of penetration (e.g., net displacement per blow) of such elements is equal to or less than that of the test element driven with the same hammer through a comparable driving distance, *or where the downward pressure and torque on such elements is greater than or equal to that applied to the test element that determined the ultimate axial load capacity at a comparable driving distance*.

...

1810A.3.3.1.5 Uplift capacity of a single deep foundation element. Where required by the design, the uplift capacity of a single deep foundation element shall be determined by an approved method of analysis based on a minimum factor of safety of three or by load tests conducted in accordance with ASTM D 3689. The maximum allowable uplift load shall not exceed the ultimate load capacity as determined in Section 1810A.3.3.1.2, using the results of load tests conducted in accordance with ASTM D3689 *including the Cyclic Loading Procedure*, divided by a factor of safety of two.

Exception: Where uplift is due to wind or seismic loading, the minimum factor of safety shall be two where capacity is determined by an analysis and one and a half where capacity is determined by load tests.

...

1810A.3.3.2 Allowable lateral load. Where required by the design, the lateral load capacity of a single deep foundation element or a group thereof shall be determined by an *approved* method of

analysis or by lateral load tests *in accordance with ASTM D3966, including the Cyclic Loading Procedure,* to at least twice the proposed design working load. The resulting allowable load shall not be more than one-half of the load that produces a gross lateral movement of 1 inch (25 mm) at the lower of the top of foundation element and the ground surface, unless it can be shown that the predicted lateral movement shall cause neither harmful distortion of, nor instability in, the structure, nor cause any element to be loaded beyond its capacity.

...

1810*A*.3.5.3.3 Structural Steel Sheet Piling. Individual sections of structural steel sheet piling shall conform to the profile indicated by the manufacturer, and shall conform to general requirements specified by ASTM A6.

Installation of sheet piling shall satisfy inspection, monitoring, and observation requirements in Sections 1812A.6 and 1812A.7.

...

1810*A*.3.8.3 Precast prestressed piles. Precast prestressed concrete piles shall comply with the requirements of Sections 1810*A*.3.8.3.1 through 1810*A*.3.8.3.3.

...

1810*A*.3.8.3.2 Seismic reinforcement in Seismic Design Category C. *Not permitted by DSA-SS, DSA-SS/CC.* ~~For structures assigned to *Seismic Design Category* C in accordance with Section 1613, precast prestressed piles shall have transverse reinforcement in accordance with this section. The volumetric ratio of spiral reinforcement shall not be less than the amount required by the following formula for the upper 20 feet (6096 mm) of the pile.~~

~~$\rho_s = 0.12\, f'_c / f_{yh}$ **(Equation 18-5)**~~

~~where:~~

~~f'_c = Specified compressive strength of concrete, psi (MPa).~~

~~f_{yh} = Yield strength of spiral reinforcement ≤ 85,000 psi (586 MPa).~~

~~ρ_s = Spiral reinforcement index (vol. spiral/vol. core).~~

~~At least one-half the volumetric ratio required by Equation 18-5 shall be provided below the upper 20 feet (6096 mm) of the pile.~~

1810*A*.3.8.3.3 Seismic reinforcement in Seismic Design Categories D through F. For structures assigned to *Seismic Design Category* D, E or F, ~~*in accordance with Section 1613A,*~~ precast prestressed piles shall have transverse reinforcement in accordance with the following:

...

5. Where the transverse reinforcement consists of circular spirals, the volumetric ratio of spiral transverse reinforcement in the ductile region shall comply with the following:

...

~~This required amount of spiral reinforcement is permitted to be obtained by providing an inner and outer spiral.~~

...

1810*A*.3.9.4.2.1 Site Classes A through D. For Site Class A, B, C or D sites, transverse confinement reinforcement shall be provided in the element in accordance with Sections 18.7.5.2, 18.7.5.3 and 18.7.5.4 of ACI 318 within three times the least element dimension *at* ~~of~~ the bottom of the pile cap. A transverse spiral reinforcement ratio of not less than one-half of that required in Section 18.7.5.4 ~~(a)~~ of ACI 318 shall be permitted *for concrete deep foundation elements.*

1810*A*.3.9.4.2.2 Site Classes E and F. For Site Class E or F sites, transverse confinement reinforcement shall be provided in the element in accordance with Sections 18.7.5.2, 18.7.5.3 and 18.7.5.4 of ACI 318 within seven times the least element dimension *at* ~~of~~ the *bottom of the* pile cap and within seven times the least element dimension *at* ~~of~~ the interfaces of strata that are hard or stiff and strata that are liquefiable or are composed of soft- to medium-stiff clay.

...

1810*A*.3.10 Micropiles. Micropiles shall be designed and detailed in accordance with Sections 1810*A*.3.10.1 through 1810*A*.3.10.4.

...

~~**1810A.3.10.4 Seismic reinforcement.** For structures assigned to *Seismic Design Category* C, a permanent steel casing shall be provided from the top of the micropile down to the point of zero curvature. For structures assigned to *Seismic Design Category* D, E or F, the micropile shall be considered as an alternative system in accordance with Section 104.11. The alternative system design, supporting documentation and test data shall be submitted to the *building official* for review and approval.~~

1810A.3.10.4 Seismic requirements. *For structures assigned to Seismic Design Category D, E, or F, a permanent steel casing having a minimum thickness of 3/8" shall be provided from the top of the micropile down to a minimum of 120 percent of the point of zero curvature. Capacity of micropiles shall be determined in accordance with Section 1810A.3.3 by at least two project specific pre-production tests for each soil profile, size and depth of micropile. At least two percent of all production piles shall be proof tested to the load determined in accordance with Section 1616A.1.16.~~1615A.1.10.~~*

Steel casing length in soil shall be considered as unbonded and shall not be considered as contributing to friction. Casing shall provide confinement at least equivalent to hoop reinforcing required by ACI 318 Section 18.13.4. ~~21.12.4.~~

Reinforcement shall have Class 1 corrosion protection in accordance with PTI Recommendations for Prestressed Rock and Soil Anchors. Steel casing design shall include at least 1/16" corrosion allowance.

Micropiles shall not be considered as carrying any horizontal loads.

...

1810*A*.4 Installation. Deep foundations shall be installed in accordance with Section 1810*A*.4. Where a single deep foundation element comprises two or more sections of different materials or different types spliced together, each section shall satisfy the applicable conditions of installation.

1810*A*.4.1 Structural integrity. Deep foundation elements shall be installed in such a manner and sequence as to prevent distortion or damage that may adversely affect the structural integrity of adjacent structures or of foundation elements being installed or already in place and as to avoid compacting the surrounding soil to the extent that other foundation elements cannot be installed properly.

...

1810*A*.4.1.5 Defective timber piles. *Not permitted by DSA-SS, DSA-SS/CC.* ~~Any substantial sudden increase in rate of penetration of a timber pile shall be investigated for possible damage. If the sudden increase in rate of penetration cannot be correlated to soil strata, the pile shall be removed for inspection or rejected.~~

...

SECTION 1811A
PRESTRESSED ROCK AND SOIL FOUNDATION ANCHORS

1811A.1 General. *The requirements of this section address the use of vertical rock and soil anchors in resisting seismic or wind overturning forces resulting in tension on shallow foundations.*

1811A.2 Adoption. *Except for the modifications as set forth in Sections 1811A.3 and 1811A.4, all Prestressed Rock and Soil Foundation Anchors shall ~~be designed~~ comply with ~~in accordance with~~ PTI Recommendations for Prestressed Rock and Soil Anchors.*

1811A.3 Geotechnical Requirements. *Geotechnical report for the Prestressed Rock & Soil Foundation Anchors shall address the following:*

1. *Minimum diameter and minimum spacing for the anchors including consideration of group effects.*
2. *Maximum unbonded length and minimum bonded length of the tendon.*

3. *Maximum recommended anchor tension capacity based upon the soil or rock strength / grout bond and anchor depth / spacing.*

4. *Allowable bond stress at the ground / grout interface and applicable factor of safety for ultimate bond stress.*

5. *Anchor axial tension stiffness recommendations at the anticipated anchor axial tension displacements, when required for structural analysis.*

6. *Minimum grout pressure for installation and post-grout pressure.*

7. *Class I Corrosion Protection is required for all permanent anchors. Geotechnical report shall specify the corrosion protection recommendations for temporary anchors.*

8. *Performance test shall be at a minimum of 1.6 times the design loads. There shall be a minimum of two preproduction test anchors. Preproduction test anchors shall be tested to ultimate load or 0.80 times the specified minimum tensile strength of the tendon. A Creep test is required for all prestressed anchors with greater than 10 kips of lock-off prestressing load.*

9. *Lock-off prestressing load requirements.*

10. *Acceptable Drilling methods.*

11. *Geotechnical observation and monitoring requirements.*

1811A.4 Structural Requirements.

1. *Tendons shall be thread-bar anchors conforming to ASTM A722.*

2. *The anchors shall be placed vertical.*

3. *Design Loads shall be based upon the load combinations in Section 1605A.3.1 and shall not exceed 60 percent of the specified minimum tensile strength of the tendons.*

4. *Ultimate Load shall be based upon Section 1616A.1.16 ~~1615A.1.10~~ and shall not exceed 80 percent of the specified minimum tensile strength of the tendons.*

5. *The anchor shall be designed to fail in grout bond to the soil or rock before pullout of the soil wedge by group effect.*

6. *Foundation design shall incorporate the effect of lock-off loads.*

7. *Design shall account for as-built locations of soil anchors considering all the acceptable construction tolerances.*

8. *Design shall account for both short and long term deformation.*

9. *Enforcement agency may require consideration of anchor deformation in evaluating deformation compatibility or building drift where it may be significant.*

SECTION 1812A
EARTH RETAINING SHORING

[Relocated from Section J106.2] ~~J106.2 Earth retaining shoring. [DSA-SS & DSA-SS/CC]~~

1812A.1 *~~J106.2.1~~* ***General.*** *The requirements of this section shall apply to temporary and permanent earth retaining shoring using soldier piles and lagging with or without tie-back anchors in soil or rock, only when existing or new ~~DSA-SS & DSA-SS/CC~~ facilities are affected. Shoring used as construction means and methods only, which does not affect existing or new ~~DSA-SS & DSA-SS/CC~~ facilities, are not regulated by this section ~~DSA~~ and shall satisfy the requirements of the authorities having jurisdiction.*

Design, construction, testing, and inspection shall satisfy the requirements of this code except as modified in Sections 1812A.2 ~~J106.2.2~~ through ~~J106.2.8~~ 1812A.8.

1812A.2 *~~J106.2.2~~* ***Duration.*** *Shoring shall be considered temporary when elements of the shoring will be exposed to site conditions for a period of less than one (1) year, and shall be considered permanent otherwise. Permanent shoring shall account for the increase in lateral soil pressure due to earthquake. At the end of the construction period, the existing and new structures shall not rely on the temporary shoring for support in anyway. Wood components shall not be used for permanent shoring lasting more than two (2) years. Wood components of the temporary shoring that may affect the performance of permanent structure shall be removed after the shoring is no longer required.*

All components of the shoring shall have corrosion protection or preservative treatment for their expected duration. Wood components of the temporary shoring that will not be removed shall be treated in accordance with AWPA U1 (Commodity Specification A, Use Category 4B and Section 5.2), and shall be identified in accordance with Section 2303.1.9.1 ~~2303.1.8.1~~.

1812A.3 ~~***J106.2.3***~~ **Surcharge.** *Surcharge pressure due to footings, traffic, or other sources shall be considered in design. If the footing surcharge is located within the semi-circular distribution or bulb of earth pressure (when shoring is located close to a footings), lagging shall be designed for lateral earth pressure due to footing surcharge. Soil arching effects may be considered in the design of lagging. Underpinning of the footing may be used in lieu of designing the shoring and lagging for surcharge pressure. Alternatively, continuously contacting drilled pier shafts near the footings shall be permitted. The lateral surcharge design pressure shall be derived using Boussinesq equations modified for the distribution of stresses in an elastic medium due to a uniform, concentrated or line surface load as appropriate and soil arching effects.*

1812A.4 ~~***J106.2.4***~~ **Design and testing.** *Except for the modifications as set forth in Sections 1812A.4.1* ~~*J106.2.4.1 and J106.2.4.2*~~ *through 1812A.4.3 below, all Prestressed Rock and Soil Tie-back Anchors shall* ~~*be designed and tested in accordance*~~ *comply with PTI Recommendations for Prestressed Rock and Soil Anchors (PTI-2004).*

1812A.4.1 ~~***J106.2.4.1***~~ **Geotechnical requirements.** *The geotechnical report for the earth retaining shoring shall address the following:*

1. *Minimum diameter and minimum spacing for the anchors including consideration of group effects.*
2. *Maximum unbonded length and minimum bonded length of the tie-back anchors.*
3. *Maximum recommended anchor tension capacity based upon the soil or rock strength / grout bond and anchor depth / spacing.*
4. *Allowable bond stress at the ground / grout interface and applicable factor of safety for ultimate bond stress for the anchor. For permanent anchors, a minimum factor of safety of 2.0 shall be applied to ground soil interface as required by PTI-2004 Section 6.6.*
5. *Minimum grout pressure for installation and post-grout pressure for the anchor. The presumptive post grout pressure of 300 psi may be used for all soil type.*
6. *Class I Corrosion Protection is required for all permanent anchors. The geotechnical report shall specify the corrosion protection recommendations for temporary anchors.*
7. *Performance test for the anchors shall be at a minimum of two (2) times the design loads and shall not exceed 80% of the specified minimum tensile strength of the anchor rod. A creep test is required for all prestressed anchors that are*

performance tested. All production anchors shall be tested at 150% of design loads and shall not be greater than 70% of the specified minimum tensile strength of the anchor rod.

8. *Earth pressure, surcharge pressure, and the seismic increment of earth pressure loading, when applicable.*
9. *Maximum recommended lateral deformation at the top of the soldier pile, at the tie-back anchor locations, and the drilled pier concrete shafts at the lowest grade level.*
10. *Allowable vertical soil bearing pressure, friction resistance, and lateral passive soil resistance for the drilled pier concrete shafts and associated factors of safety for these allowable capacities.*
11. *Soil-pier shaft / pile interaction assumptions and lateral soil stiffness to be used in design for drilled pier concrete shaft or pile lateral loads.*
12. *Acceptable drilling methods.*
13. *Geotechnical observation and monitoring recommendations.*

1812A.4.2 ~~J106.2.4.2~~ Structural requirements:

1. *Tendons shall be thread-bar anchors conforming to ASTM A 722.*
2. *Anchor design loads shall be based upon the load combinations in Section 1605A.3.1 and shall not exceed 60 percent of the specified minimum tensile strength of the tendons.*
3. *The anchor shall be designed to fail in grout bond to the soil or rock before pullout of the soil wedge.*
4. *Design of shoring system shall account for as-built locations of soil anchors considering all specified construction tolerances in Section 1812A.8 ~~J106.2.8~~.*
5. *Design of shoring system shall account for both short and long term deformation.*

1812A.4.3 ~~J106.2.4.3~~ Testing of tie-back anchors:

1. *The geotechnical engineer shall keep a record at job site of all test loads, total anchor movement, and report their accuracy.*

2. *If a tie-back anchor initially fails the testing requirements, the anchor shall be permitted to be re-grouted and retested. If anchor continues to fail, the followings steps shall be taken:*

   a. *The contractor shall determine the cause of failure – variations of the soil conditions,*

installation methods, materials, etc.

b. Contractor shall propose a solution to remedy the problem. The proposed solution will need to be reviewed and approved by geotechnical engineer, shoring design engineer, and the building official.

3. After a satisfactory test, each anchor shall be locked-off in accordance with Section 8.4 of PTI 2004.

4. The shoring design engineer shall specify design loads for each anchor.

1812A.5 ~~***J106.2.5***~~ **Construction:** *The construction procedure shall address the following:*

1. Holes drilled for piles / tie-back anchors shall be done without detrimental loss of ground, sloughing or caving of materials and without endangering previously installed shoring members or existing foundations.
2. Drilling of earth anchor shafts for tie-backs shall occur when the drill bench reaches two to three feet below the level of the tie-back pockets.
3. Casing or other methods shall be used where necessary to prevent loss of ground and collapse of the hole.
4. The drill cuttings from earth anchor shaft shall be removed prior to anchor installation.
5. Unless tremie methods are used, all water and loose materials shall be removed from the holes prior to installing piles / tie-backs.
6. Tie-back anchor rods with attached centralizing devices shall be installed into the shaft or through the drill casing. Centralizing device shall not restrict movement of the grout.
7. After lagging installation, voids between lagging and soil shall be backfilled immediately to the full height of lagging.
8. The soldier piles shall be placed within specified tolerances in the drilled hole and braced against displacement during grouting. Fill shafts with concrete up to top of footing elevation, rest of the shaft can generally be filled with lean concrete. Excavation for lagging shall not be started until concrete has achieved sufficient strength for all anticipated loads as determined by the shoring design engineer.
9. Where boulders and / or cobbles have been identified in the geotechnical reports, contractor shall be prepared to address boulders and / or cobbles that may be encountered during the drilling of soldier piles and Tie-back anchors.
10. The grouting equipment shall produce grout free of lumps and indispensed cement. The grouting equipment shall be sized to enable the grout to be pumped in continuous operation.

The mixer shall be capable of continuously agitating the grout.

11. *The quantity of grout and grout pressure shall be recorded. The grout pressure shall be controlled to prevent excessive heave in soils or fracturing rock formations.*
12. *If post-grouting is required, post grouting operation shall be performed after initial grout has set for 24-hours in the bond length only. Tie-backs shall be grouted over a sufficient length (anchor bond length) to transfer the maximum anchor force to the anchor grout.*
13. *Testing of anchors may be performed after post-grouting operations provided grout has reached strength of 3,000 psi as required by PTI-2004 Section 6.11.*
14. *Anchor rods shall be tensioned straight and true. Excavation directly below the anchors shall not continue before those anchors are tested.*

1812A.6 ~~J106.2.6~~ Inspection, survey monitoring, and observation

1. *The shoring design engineer or his designee shall make periodic inspections of the job site for the purpose of observing the installation of shoring system, testing of tie-back anchors, and monitoring of survey.*

2. *Testing, inspection, and observation shall be in accordance with testing, inspection and observation requirements approved by the building official. The following activities and materials shall be tested, inspected, or observed by the special inspector and geotechnical engineer:*
   a. *Sampling and testing of concrete in soldier pile and tie-back anchor shafts.*
   b. *Fabrication of tie-back anchor pockets on soldier beams*
   c. *Installation and testing of tie-back anchors.*
   d. *Survey monitoring of soldier pile and tie-back load cells.*
   e. *Survey Monitoring of existing buildings.*

3. *A complete and accurate record of all soldier pile locations, depths, concrete strengths, tie-back locations and lengths, tie-back grout strength, quantity of concrete per pile, quantity of grout per tie-back and applied tie-back loads shall be maintained by the special inspector and geotechnical engineer. The shoring design engineer shall be notified of any unusual conditions encountered during installation.*

4. *Calibration data for each test jack, pressure gauge, and master pressure gauge shall be verified*

by the special inspector and geotechnical engineer. The calibration tests shall be performed by an independent testing laboratory and within 120 calender days of the data submitted.

5. *Monitoring points shall be established at the top and at the anchor heads of selected soldier piles and at intermediate intervals as considered appropriate by the geotechnical engineer.*

6. *Control points shall be established outside the area of influence of the shoring system to ensure the accuracy of the monitoring readings.*

7. *The periodic basis of shoring monitoring, as a minumum, shall be as follows:*

   a. *Intitial monitoring shall be performed prior to any excavation.*
   b. *Once excavation has begun, the periodic readings shall be taken weekly until excavation reaches the estimated subgrade elevation and the permanent foundation is complete.*
   c. *If performance of the shoring is within established guidelines, shoring design engineer may permit the periodic readings to be bi-weekly. Once initiated, bi-weekly readings shall continue until the building slab at ground floor level is completed and capable of transmitting lateral loads to the permanent structure. Thereafter, readings can be monthly.*
   d. *Where the building has been designed to resist lateral earth pressures, the periodic monitoring of the soldier piles and adjacent structure can be discontinued once the ground floor diaphragm and subterranean portion of the structure is capable of resisting lateral soil loads and approved by the shoring design engineer, geotechnical engineer, and the building official.*
   e. *Additional readings shall be taken when requested by special inspector, shoring design engineer, geotechnical engineer, or the building official.*

8. *Monitoring reading shall be submitted to shoring design engineer, engineer in responsible charge, and the building official within 3 working days after they are conducted. Monitoring readings shall be accurate to within 0.01 feet. Results are to be submitted in tabular form showing at least the intial date of monitoring and reading, current monitoring date and reading and difference between the two readings.*

9. *If the total cummulative horizontal or vertical movement (from start of construction) of the existing buildings reaches ½" or soldier piles reaches 1" all excavation activities shall be suspended. The geotechnical and shoring design engineer shall determine the cause of movement, if any,*

and recommend corrective measures, if necessary, before excavation continues.

10. *If the total cummulative horizontal or vertical movement (from start of construction) of the existing buildings reaches 3/4" or soldier piles reaches 1 ½" all excavation activities shall be suspended until the causes, if any, can be determined. Supplemental shoring shall be devised to eliminate further movement and the building official shall review and approve the supplemental shoring before excavation continues.*

11. *Monitoring of Tie-back Anchor Loads:*

    a. *Load cells shall be installed at the tie-back heads adjacent to buildings at maximum interval of 50', with a minimum of one load cells per wall.*
    b. *Load cell readings shall be taken once a day during excavation and once a week during the remainder of construction.*
    c. *Load cell readings shall be submitted to the geotechnical engineer, shoring design engineer, engineer in responsible charge, and the building official.*
    d. *Load cell readings can be terminated once the temporary shoring no longer provides support for the buildings.*

1812A.7 ~~J106.2.7~~ Monitoring of existing DSA-SS and DSA-SS/CC structures

1. *The contractor shall complete a written and photographic log of all existing DSA-SS, DSA-SS/CC and structures within 100 ft or three times depth of shoring, prior to construction. A licensed surveyor shall document all existing substantial cracks in adjacent existing structures.*
2. *Contractor shall document existing condition of wall cracks adjacent to shoring walls prior to start of construction.*
3. *Contractor shall monitor existing walls for movement or cracking that may result from adjacent shoring.*
4. *If excessive movement or visible cracking occurs, contractor shall stop work and shore / reinforce excavation and contact shoring design engineer and the building official.*
5. *Monitoring of the existing structure shall be at reasonable intervals as required by the registered design professional subject to approval of the building official. Monitoring shall be performed by a licensed surveyor and shall consist of vertical and lateral movement of the*

existing structures. Prior to starting shoring installation a pre-construction meeting shall take place between the contractor, shoring design engineer, surveyor, geotechnical engineer, and the building official to identify monitoring locations on existing buildings.

6. *If in the opinion of the building official or shoring design engineer, monitoring data indicate excessive movement or other distress, all excavation shall cease until the geotechnical engineer and shoring design engineer investigates the situation and makes recommendations for remediation or continuing.*
7. *All reading and measurements shall be submitted to the building official and shoring design engineer.*

1812A.8 ~~***J106.2.8***~~ ***Tolerances.*** *Following tolerances shall be specified on the construction documents.*

1. *Soldier Piles:*

   i. *Horizontal and vertical construction tolerances for the soldier pile locations.*
   ii. *Soldier pile plumbness requirements (angle with vertical line).*

2. *Tie-back Anchors:*

   i. *Allowable deviation of anchor projected angle from specified vertical and horizontal design projected angle.*
   ii. *Anchor clearance to the existing/new utilities and structures.*

~~[Relocated from Section J112]~~

Section *1813A* ~~***J112***~~

Vibro Stone Columns for Ground Improvement

1813A.1 ~~***J112.1***~~ ***General.*** ~~***[DSA-SS & DSA-SS/CC]***~~ *This section shall apply to Vibro Stone Columns (VSCs) for ground improvement using unbounded aggregate materials. Vibro stone column provisions in this section are intended to increase bearing capacity, reduce settlements, and mitigate liquefaction for shallow foundations. These requirements shall not be used for grouted or bonded stone columns, ground improvement for deep foundation elements, or changing site class. VSCs shall not be considered as a deep foundation element.*

Ground improvement shall be installed under the entire building/structure footprint and not under isolated foundation elements only.

Design, construction, testing, and inspection shall satisfy the requirements of this code except as modified in Sections 1813A.2 ~~J112.2~~ through ~~J112.5~~ 1813A.5.

1813A.2 ~~J112.2~~ Geotechnical Report. *The geotechnical report shall specify vibro stone column requirements to ensure uniformity in total and differential immediate settlement, long term settlement, and earthquake induced settlement.*

1. *Soil compaction shall be sufficient to mitigate potential for liquefaction as described in California Geological Survey (CGS) Special Publication 117A (SP-117A): Guidelines for Evaluating and Mitigating Seismic Hazard in California.*

2. *Area replacement ratio for the compaction elements and the basis of its determination shall be explained. Minimum factor of safety for soil compaction shall be in accordance with SP-117A.*

3. *Depth of soil compaction elements and extent beyond the footprint of structures/foundation shall be defined. Extent beyond the foundation shall be half the depth of the VSCs with a minimum of 10' or an approved alternative.*

4. *Minimum diameter and maximum spacing of soil compaction elements shall be specified. VSC's shall not be less than 2 feet in diameter and center to center spacing shall not exceed 8 feet.*

5. *The modulus of subgrade reactions for shallow foundations shall account for the presence of compaction elements.*

6. *The modulus of subgrade reactions, long-term settlement, and post-earthquake settlement shall be specified along with expected total and differential settlements for design.*

7. *The acceptance criteria for Friction Cone and Piezocone Penetration Testing ~~Cone Penetration Test (CPT)~~ in accordance with ASTM D 5778 ~~3441~~ complemented by Standard Penetration Test (SPT) in accordance with ASTM D 1586, if necessary, to verify soil improvement shall be specified*

8. *The requirements for special inspection and observation by the Geotechnical engineer shall be specified.*

9. *A Final Verified Report (FVR) documenting the installation of the ground improvement system and confirming that the ground improvement acceptance criteria have been met shall be prepared by the Geotechnical Engineer and submitted to the enforcement agency for review and approval.*

1813A.3 ~~***J112.3***~~ ***Shallow Foundations.*** *VSCs under the shallow foundation shall be located symmetrically around the centroid of the footing or load.*

1. *There shall be a minimum of four stone columns under each isolated or continuous/combined footing or approved equivalent.*

2. *The VSCs or deep foundation elements shall not be used to resist tension or overturning uplift from the shallow foundations.*

3. *The foundation design for the shallow foundation shall consider the increased vertical stiffness of the VSCs as point supports for analysis, unless it is substantiated that the installation of the VSCs result in improvement of the surrounding soils such that the modulus of subgrade reaction, long term settlement, and post-earthquake settlement can be considered uniform throughout.*

1813A.4 ~~***J112.4***~~ ***Installation.*** *VSCs shall be installed with vibratory probes. Vertical columns of compacted unbounded aggregate shall be formed through the soils to be improved by adding gravel near the tip of the vibrator and progressively raising and re-penetrating the vibrator which will results in the gravel being pushed into the surrounding soil.*

Gravel aggregate for VSCs shall be well graded with a maximum size of 6" and not more than 10% smaller than 3/8" after compaction.

1813A.5 ~~***J112.5***~~ ***Construction Documents.*** *Construction documents for VSCs, as a minimum, shall include the following:*

1. *Size, depth, and location of VSCs.*
2. *Extent of soil improvements along with building/structure foundation outlines.*
3. *Field verification requirements and acceptance criteria using CPT/SPT.*

4. *The locations where CPT/SPT shall be performed.*
5. *The Testing, Inspection and Observation (TIO) program shall indicate the inspection and observation required for the VSCs.*

All existing amendments that are not revised above shall continue without any change.

Notation for [DSA-SS]
Authority: Education Code § 17310 and 81142, and H&S Code §16022.
Reference: Education Code §§ 17280 through 17317, and 81130 through 81147, and Health and Safety Code §§16000 through 16023.

Notation for [DSA-SS/CC]
Authority: Education Code § 81053.
Reference: Education Code §§ 81052, 81053, and 81130 through 81147.

CHAPTER 19

CONCRETE

Adopt and/or codify chapter as amended below:

PROPOSED ADOPTION	DSA-SS	DSA-SS/CC	Comments
Adopt entire chapter without amendments			
Adopt entire chapter with amendments listed below	-	X	
Adopt only those sections listed below			
1901.1.1		X	
1901.1.2		X	
1901.1.3		X	
1901.1.4		X	
1909		X	
~~*1913.1.1*~~		~~X~~	
~~*1913.2*~~		~~X~~	
~~*1913.2.1*~~		~~X~~	
~~*1913.2.2*~~		~~X~~	
~~*1913.2.3*~~		~~X~~	

~~1913.2.4~~		X	
~~1913.2.5~~		X	
~~1913.2.6~~		X	
~~1913.2.7~~		X	
~~1913.2.8~~		X	
~~1913.2.9~~		X	
~~1913.2.10~~		X	
~~1913.2.11~~		X	
~~1913.2.11.1~~		X	
~~1913.2.11.2~~		X	
~~1913.2.11.3~~		X	
~~1913.2.11.4~~		X	
~~1913.2.11.5~~		X	
~~1913.3.1~~		X	
~~1913.3.2~~		X	
~~1913.3.3~~		X	
~~1913.3.4~~		X	
~~1913.3.5~~		X	
~~1913.3.6~~		X	
~~1913.3.7~~		X	
~~1913.3.8~~		X	
~~1913.4.1~~		X	
~~1913.4.2~~		X	
~~1913.4.3~~		X	
~~1913.4.4~~		X	
~~1913.4.5~~		X	
~~1913.5~~		X	

~~*All existing California amendments that are not revised below shall continue without change.*~~

Italics are used for text within Sections 1903 through 1905 of this code to indicate provisions that differ from ACI 318.

SECTION 1901
GENERAL

1901.1 Scope. *The provisions of this chapter shall govern the materials, quality control, design and construction of concrete used in structures.*

1901.1.1 Application. *The scope of application of Chapter 19 is as follows:*

Community college buildings regulated by the Division of the State Architect—Structural Safety/Community Colleges (DSA-SS/CC), as listed in Section 1.9.2.2.

1901.1.2 Amendments in this chapter. *DSA-SS/CC adopts this chapter and all amendments.*

Exceptions: *Amendments adopted by only one agency appear in this chapter preceded with the appropriate acronym of the adopting agency, as follows:*

Division of the State Architect—Structural Safety/Community Colleges:

[DSA-SS/CC] *For applications listed in Section 1.9.2.2.*

1901.1.3 Reference to other chapters. [DSA-SS/CC] *Where reference within this chapter is made to sections in Chapters 17 and 18, the provisions in Chapters 17A, and 18A respectively shall apply instead.*

1901.1.4 Amendments. [DSA-SS/CC] *See Section 1909 ~~1913~~ for additional requirements applicable to community colleges.*

...

SECTION 1909 ~~1913~~
ADDITIONAL REQUIREMENTS FOR COMMUNITY COLLEGES [DSA-SS/CC]

1909.1 ~~1913.1~~ General.

1909.1.1 ~~1913.1.1~~ Construction documents. *Openings larger than 12 inches (305 mm) in any dimension shall be detailed on the structural drawings.*

1909.2 ~~1913.2~~ Tests and materials. *Where required, special inspections and tests shall be in accordance with Chapter 17A and this section.*

~~***1913.2.1 Glass fiber reinforced concrete.*** *Glass fiber reinforced concrete (GFRC) and the materials used in such concrete shall be in accordance with the PCI MNL 128 standard.*~~

~~***1913.2.2 Fly ash.*** *Replace ACI 318 Section 3.2.2 as follows: Fly ash or other pozzolan can be used as a partial substitute for ASTM C 150 portland cement, as follows:*~~

~~*1. Fly ash or other pozzolan shall conform to ASTM C 618 for Class N or Class F materials (Class C is not permitted), and*~~

~~2. More than 15 percent by weight of fly ash or other pozzolans shall be permitted to be substituted for ASTM C 150 portland cement if the mix design is proportioned per ACI 318 Section 5.3. See Section 1904 for durability requirements.~~

~~3. More than 40 percent by weight of ground-granulated blast furnace slag conforming to ASTM C 989 shall be permitted to be substituted for ASTM C 150 portland cement if the mix design is proportioned per ACI 318 Section 5.3. See Section 1904 for durability requirements.~~

1909.2.1 ~~***1913.2.3***~~ ***Aggregates*** - ~~*ACI 318, Section 3.3.2.*~~ *Modify ACI 318 Section 26.4.1.2.1(a).(1)* ~~*3.3.2*~~ *as follows:* ~~*by adding the following:*~~

~~*Aggregate size limitations waiver shall be approved by the enforcement agency.*~~

~~*Evidence that the aggregate used is not reactive in the presence of cement alkalis may be required by the enforcement agency. If new aggregate sources are to be used or if past experience indicates problems with existing aggregate sources, test the aggregate for potential reactivity according to ASTM C 289 to determine potential reactivity in the presence of cement.*~~

~~*If the results of the test are other than innocuous, selected concrete proportions using the aggregate (see Section 1905.2) shall be tested in accordance with ASTM C 1567. If the results of this test indicate an expansion greater than 0.10 percent at 16 days age, provide mitigation with one of the cementitious material systems noted below such that an expansion of less than 0.10 percent at 16 days age is obtained:*~~

~~*1. Low alkali portland cement containing not more than 0.6 percent total alkali when calculated as sodium oxide, as determined by the method given in ASTM C 114.*~~

~~*2. Blended hydraulic cement, Type IS or IP, conforming to ASTM C 595, except that Type IS cement shall not contain less than 40 percent slag constituent.*~~

~~*3. Replacement of not less than 15 percent by weight of the portland cement used by a mineral admixture conforming to ASTM C 618 for Class N or F materials (Class C is not permitted).*~~

~~*4. Replacement of not less than 40 percent by weight of the portland cement used by a ground granulated blast furnace slag conforming to ASTM C 989.*~~

(1) ***Normal weight aggregate:*** *Aggregate shall be non-reactive as determined by one of the methods in ASTM C33 Appendix XI Methods for Evaluating Potential for Deleterious Expansion Due to Alkali Reactivity of an Aggregate. Aggregates deemed to be deleterious or potentially deleterious may be used with the addition of a material that has been shown to prevent harmful expansion in accordance with Appendix XI of ASTM C33, when approved by the building official.*

1909.2.2 ~~***1913.2.4***~~ ~~***Discontinuous***~~ ***Ssteel fibers reinforcement*** – *Not permitted.* ~~*Modify ACI 318 Section 3.5.1 by adding the following:*~~

~~*Discontinuous steel fibers shall not be permitted*~~

1909.2.3 ***~~1913.2.5~~*** ***Cementitious material.*** *The concrete supplier shall furnish to the enforcement agency certification that the cement proposed for use on the project has been manufactured and tested in compliance with the requirements of ASTM C 150 for portland cement and ASTM C 595 or ASTM C 1157 for blended hydraulic cement, whichever is applicable. When a mineral admixture or ground granulated blast-furnace slag is proposed for use, the concrete supplier shall furnish to the enforcement agency certification that they have been manufactured and tested in compliance with ASTM C 618 or ASTM C 989, whichever is applicable. The concrete producer shall provide copies of the cementitious material supplier's certificate of compliance that represents the materials used by date of shipment for concrete. Cementitious materials without certification of compliance shall not be used.*

1909.2.4 ***~~1913.2.6~~*** ***Tests of reinforcing bars.*** *~~Where~~ ~~s~~Samples shall be ~~are~~ taken from bundles as delivered from the mill, with the bundles identified as to heat number and ~~provided~~ the accompanying mill certificate. ~~analyses accompany the report, o~~ One tensile test and one bend test shall be made from a sample ~~specimen~~ from each 10 tons (9080 kg) or fraction thereof of each size of reinforcing steel.*

Where positive identification of the heat number cannot be made or where random samples are to be taken, one series of tests shall be made from each 2 1/2 tons (2270 kg) or fraction thereof of each size of reinforcing steel.

Tests of reinforcing bars may be waived by the structural engineer with the approval of the Building Official for one-story buildings or non-building structures provided they are identified in the construction documents and certified mill test reports are provided to the inspector of record for each shipment of such reinforcement.

1909.2.5 ***~~1913.2.7~~*** ***Tests for prestressing steel and anchorage.*** *All wires or bars of each size from each mill heat and all strands from each manufactured reel to be shipped to the site shall be assigned an individual lot number and shall be tagged in such a manner that each lot can be accurately identified at the job site. Each lot of tendon and anchorage assemblies and bar couplers to be installed shall be likewise identified.*

The following samples of materials and tendons selected by the engineer or the designated testing laboratory from the prestressing steel at the plant or job site shall be furnished by the contractor and tested by an approved independent testing agency:

1. For wire, strand or bars, 7-foot-long (2134 mm) samples shall be taken of the coil of wire or strand reel or rods. A minimum of one random sample per 5,000 pounds (2270 kg) of each heat or lot used on the job shall be selected.

2. For prefabricated prestressing tendons other than bars, one completely fabricated tendon 10 feet (3048 mm) in length between grips with anchorage assembly at one end shall be furnished for each size and type of tendon and anchorage assembly.

Variations of the bearing plate size need not be considered.

The anchorages of unbonded tendons shall develop at least 95 percent of the minimum specified ultimate strength of the prestressing steel. The total elongation of the tendon under ultimate load shall not be less than 2 percent measured in a minimum gage length of 10 feet (3048 mm).

Anchorages of bonded tendons shall develop at least 90 percent of the minimum specified strength of the prestressing steel tested in an unbonded state. All couplings shall develop at least 95 percent of the minimum specified strength of the prestressing steel and shall not reduce the elongation at rupture below the requirements of the tendon itself.

3. If the prestressing tendon is a bar, one 7-foot (2134 mm) length complete with one end anchorage shall be furnished and, in addition, if couplers are to be used with the bar, two 4-foot (1219 mm) lengths of bar fabricated to fit and equipped with one coupler shall be furnished.

4. Mill tests of materials used for end anchorages shall be furnished. In addition, at least one Brinnell hardness test shall be made of each thickness of bearing plate.

1909.2.6 ~~***1913.2.8***~~ **Composite construction cores.** *Cores of the completed composite concrete construction shall be taken to demonstrate the shear strength along the contact surfaces. The cores shall be tested when the cast-in-place concrete is approximately 28 days old and shall be tested by a shear loading parallel to the joint between the precast concrete and the cast-in-place concrete. The minimum unit shear strength of the contact surface area of the core shall not be less than 100 psi (689 kPa).*

At least one core shall be taken from each building for each 5,000 square feet (465 m2) of area of composite concrete construction and not less than three cores shall be taken from each project. The architect or structural engineer in responsible charge of the project or his or her representative shall designate the location for sampling.

~~***1913.2.9 Tests of shotcrete.*** *Testing of shotcrete shall follow the provisions of Sections 1910, 1909.4, and the general requirements of ACI 318 Section 5.6.*~~

~~***1913.2.10 Gypsum field tests.*** *Field tests shall be made during construction to verify gypsum strength. One sample consisting of three specimens shall be made for each 5,000 square feet (465 m2) or fraction thereof of all gypsum poured, but not less than one sample shall be taken from each half day's pour.*~~

1909.2.7 ~~***1913.2.11***~~ **Tests for post-installed anchors in concrete.** *When post-installed anchors are used in lieu of cast-in place bolts, the installation verification test loads frequency and acceptance criteria shall be in accordance with this section.*

1909.2.7.1 ~~***1913.2.11.1***~~ **General.** *Test loads or torques and acceptance criteria shall be shown on the construction documents.*

If any anchor fails testing, all anchors of the same type shall be tested, which are installed by the same trade, not previously tested until twenty (20) consecutive anchors pass, then resume the initial test frequency.

1909.2.7.2 ~~***1913.2.11.5***~~ **Testing procedure.** *The test procedure shall be as permitted by an approved* ~~*test*~~ *evaluation report using criteria adopted in this code. All* ~~*other*~~ *post-installed anchors shall be tension tested.*

Exception: *Torque controlled post installed anchors and screw type anchors shall be permitted to be tested using torque based on an approved test report using criteria adopted in this code.*

Alternatively, the ~~M~~manufacturer's recommendation for testing may be approved by the enforcement agency based on approved test report using criteria adopted in this code.

1909.2.7.3 ~~1913.2.11.3~~ Test frequency. *When post-installed anchors are used for sill plate bolting applications, 10 percent of the anchors shall be tested.*

When post-installed anchors are used for other structural applications, all such anchors shall be tested.

When post-installed anchors are used for nonstructural applications such as equipment anchorage, 50 percent or alternate bolts in a group, including at least one-half the anchors in each group, shall be tested.

The testing of the post-installed anchors shall be done in the presence of the special inspector and a report of the test results shall be submitted to the enforcement agency.

Exceptions:

1. Undercut anchors that allow visual confirmation of full set shall not require testing.

2. Where the factored design tension on anchors is less than 100 lb and those anchors are clearly noted on the approved construction documents, only 10 percent of those anchors shall be tested.

3. Where adhesive anchor systems are used to install reinforcing dowel bars in hardened concrete, only 25 percent of the dowels shall be tested if all the following conditions are met:

a. The dowels are used exclusively to transmit shear forces across joints between existing and new concrete.

b. The number of dowels in any one member equals or exceeds 12.

c. The dowels are uniformly distributed across seismic force resisting members (such as shear walls, collectors and diaphragms).

Anchors to be tested shall be selected at random by the special inspector/inspector of record (IOR).

4. Testing of shear dowels across cold joints in slabs on grade, where the slab is not part of the lateral force-resisting system shall not be required.

5. Testing is not required for power actuated fasteners used to attach tracks of interior nonshear wall partitions for shear only, where there are at least three fasteners per segment of track.

1909.2.7.4 ***~~1913.2.11.2~~*** ***Test loads.*** *Required test loads shall be determined by one of the following methods:*

1. Twice the maximum allowable tension load or one and a quarter (11/4) times the maximum design strength of anchors as provided in an approved test report using criteria adopted in this code or determined in accordance with Chapter 17 ~~Appendix D~~ of ACI 318.

Tension test load need not exceed 80 percent of the nominal yield strength of the anchor element (= 0.8 Ase fya).

2. The manufacturer's recommended installation torque based on an approved test report using criteria adopted in this code.

1909.2.7.5 ***~~1913.2.11.4~~*** ***Test acceptance criteria.*** *Acceptance criteria for post-installed anchors shall be based on an approved test report using criteria adopted in this code ~~or manufacturer's written instruction, acceptable to the enforcement agency~~. Field tests shall satisfy the following minimum requirements.*

1. Hydraulic ram method:

Anchors tested with a hydraulic jack or spring loaded ~~devices~~ apparatus shall maintain the test load for a minimum of 15 seconds and shall exhibit no discernible movement during the tension test, e.g., as evidenced by loosening of the washer under the nut.

For adhesive anchors, where other than bond is being tested, the testing apparatus support ~~device~~ shall not be located within 1.5 times the anchor's embedment depth to avoid restricting the concrete shear cone type failure mechanism from occurring.

2. Torque wrench method:

Torque controlled post installed ~~A~~ anchors tested with a calibrated torque wrench shall ~~must~~ attain the specified torque within ½ turn of the nut; or one-quarter (1/4) turn of the nut for a 3/8 in. sleeve anchor only.

~~Exceptions:~~

~~1. Wedge or sleeve type: One-quarter (1/4) turn of the nut for a 3/8 in. sleeve anchor only.~~

~~2.~~ Screw~~Threaded Ttype:~~ anchors tested with a calibrated torque wrench shall attain the specified torque within ~~O~~one-quarter (1/4) turn of the screw after initial seating of the screw head.

1909.3 ~~***1913.3***~~ ***Modifications to ACI 318***

1909.3.1 ~~***1913.3.2***~~ ***ACI 318, Section 11.9*** ~~***14.9***~~. *Modify ACI 318 by adding Section 14.9 as follows:*

11.9 ~~*14.9*~~ - ***Foundation walls***. *Horizontal reinforcing of concrete foundation walls for wood-frame or light-steel buildings shall consist of the equivalent of not less than one No. 5 bar located at the top and bottom of the wall. Where such walls exceed 3 feet (914 mm) in height, intermediate horizontal reinforcing shall be provided at spacing not to exceed 2 feet (610 mm) on center. Minimum vertical reinforcing shall consist of No. 3 bars at 24 inches (610 mm) on center.*

Where concrete foundation walls or curbs extend above the floor line and support wood-frame or light steel exterior, bearing or shear walls, they shall be doweled to the foundation wall below with a minimum of No. 3 bars at 24 inches (610 mm) on center. Where the height of the wall above the floor line exceeds 18inches (457 mm), the wall above and below the floor line shall meet the requirements of ACI 318 Section 11.6 and 11.7 ~~*14.3*~~.

1909.3.2 ~~***1913.3.6***~~ ***ACI 318, Section 12.7.3.*** *Add Section 12.7.3.4 to ACI 318 as follows:* ~~***ACI 318, Section 21.11.7.***~~ ~~*Modify ACI 318 Section 21.11.7 by adding Section 21.11.7.7 as follows:*~~

~~*21.11.7.7 - Where boundary members are not required by ACI 318 Section 21.11.7.5, minimum reinforcement parallel to the edges of all diaphragms and the boundaries of all openings shall consist of twice the cross sectional area of the minimum shear reinforcement required per linear foot of diaphragm.*~~

12.7.3.4 *– At least two No. 5 bars in diaphragms having two layers of reinforcement in both directions and one No. 5 bar in diaphragms having a single layer of reinforcement in both directions shall be provided around openings larger than 12 inches in any dimension in addition to the minimum reinforcement required by Section 12.6.*

1909.3.3 ~~***1913.3.7***~~ ***ACI 318, Chapter 14*** ~~***22***~~. *Plain concrete is not permitted.*

1909.3.4 ~~***1913.3.3***~~ ***ACI 318, Section 18.10.6.5*** ~~***21.9.2.2***~~. *Modify ACI 318, Section 18.10.6.5* ~~*21.9.2.2*~~ *by adding the following:*

Where boundary members are not required by ACI 318 Section 18.10.6.2 or 18.10.6.3 ~~*21.9.6*~~*, minimum reinforcement parallel to the edges of all structural walls and the boundaries of all openings shall consist of twice the cross-sectional area of the minimum shear reinforcement required per lineal foot of wall. Horizontal extent of boundary element shall be per ACI 318 Section 18.10.6.4 (a), (b) and (c)* ~~*21.9.6.4 (a) and (b)*~~.

~~***1913.3.4 ACI 318, Section 21.9.4.***~~ ~~*Modify ACI 318 by adding Section 21.9.4.6 as follows:*~~

~~*21.9.4.6 - Walls and portions of walls with Pu > 0.35Po shall not be considered to contribute to the calculated strength of the structure for resisting earthquake induced forces. Such walls shall conform to the requirements of ACI 318 Section 21.13.*~~

1909.3.5 ~~***1913.3.5***~~ ***ACI 318, Section 18.12.6*** ~~***21.11.4***~~. *Add Section 18.12.6.2 to ACI 318 as follows:* ~~*Modify ACI 318 Section 21.11.4 by adding the following:*~~

Collector and boundary elements in topping slabs placed over precast floor and roof elements shall not be less than 3 inches (76 mm) or 6 db thick, where db is the diameter of the largest reinforcement in the topping slab.

1909.3.6 ACI 318, Table 21.2.2. *Replace Table 21.2.2 as follows.:*

Table 21.2.2 – Strength reduction factor φ for moment, axial force, or combined moment and axial force

Net tensile strain ε_t	Classification	φ			
		Type of transverse reinforcement			
		Spirals conforming to 25.7.3		Other	
$\varepsilon_t \le \varepsilon_{ty}$	Compression-controlled	0.75	(a)	0.65	(b)
$\varepsilon_{ty} < \varepsilon_t < 0.005$	Transition[1][2]	$0.75 + 0.15\frac{\varepsilon_t - \varepsilon_{ty}}{\underline{\varepsilon_t^*}\cancel{0.005} - \varepsilon_{ty}}$	(c)	$0.65 + 0.25\frac{\varepsilon_t - \varepsilon_{ty}}{\underline{\varepsilon_t^*}\cancel{0.005} - \varepsilon_{ty}}$	(d)
$\varepsilon_t \ge 0.005$	Tension-controlled[3]	0.9	(e)	0.9	(f)

[1]For sections classified as transition, it shall be permitted to use φ corresponding to compression-controlled sections.

[2] *ε_t^* is the greater of net tensile strain calculated for $P_n = 0.1A_g f'_c$ and 0.005.*

[3] *For sections with factored axial compression force $P_u \ge 0.1A_g f'_c$, φ shall be calculated using equation (c) or (d) for sections classified as transition, as applicable.*

1909.3.7 ~~***1913.3.1***~~ ***ACI 318, Section*** ~~***5.6.2.1***~~ ***26.12.2.1(a)***. *Replace ACI 318 Section 26.12.2.1(a)* ~~*5.6.2.1*~~ *by the following:*

26.12.2.1(a) ~~*5.6.2.1*~~ *- Samples for strength tests of each class of concrete placed each day shall be taken not less than once a day, or not less than once for each 50 cubic yards (38.2 m3) of concrete, or not less than once for each 2,000 square feet (186 m2) of surface area for slabs or walls. Additional samples for seven-day compressive strength tests shall be taken for each class of concrete at the beginning of the concrete work or whenever the mix or aggregate is changed.*

~~***1913.3.8 ACI 318, Section D.3.3.***~~ ~~*Replace the requirements of Section 1905.1.9 with the following. Modify ACI 318, Sections D.3.3.4.2, D.3.3.4.3(d), and D.3.3.5.2 to read as follows:*~~

~~*D.3.3.4.2 - Where the tensile component of the strength-level earthquake force applied to anchors exceeds 20 percent of the total factored anchor tensile force associated with the same load combination, anchors and their attachments shall be designed in accordance with Section D.3.3.4.3. The anchor design tensile strength shall be determined in accordance with Section D.3.3.4.4.*~~

~~***Exception:***~~

~~*Anchors designed to resist wall out-of-plane forces with design strengths equal to or greater than the force determined in accordance with ASCE 7 Equation 12.11-1 or 12.14-10 and Section 1604.8.2 of this code shall be deemed to satisfy Section D.3.3.4.3(d).*~~

~~*D.3.3.4.3(d) - The anchor or group of anchors shall be designed for the maximum tension obtained from design load combinations that include E, with E increased by Ω 0. The anchor design tensile strength shall be calculated from Section D.3.3.4.4.*~~

~~*D.3.3.5.2 - Where the shear component of the strength-level earthquake force applied to anchors exceeds 20 percent of the total factored anchor shear force associated with the same load combination, anchors and their attachments shall be designed in accordance with Section D.3.3.5.3. The anchor design shear strength for resisting earthquake forces shall be determined in accordance with Section D.6.*~~

~~***Exceptions:***~~

~~*1. For the calculation of the in-plane shear strength of anchor bolts attaching wood sill plates of bearing or nonbearing walls of lightframe wood structures to foundations or foundation stem walls, the in-plane design shear strength in accordance with Sections D.6.2 and D.6.3 need not be computed and Section D.3.3.5.3 shall be deemed to be satisfied, provided all of the following are met:*~~

~~*1.1. The allowable in-plane shear strength of the anchor is determined in accordance with AF&PA NDS Table 11E for lateral design values parallel to grain.*~~

~~*1.2. The maximum anchor nominal diameter is 5/8 inches (16 mm).*~~

~~*1.3. Anchor bolts are embedded into concrete a minimum of 7 inches (178 mm).*~~

~~*1.4. Anchor bolts are located a minimum of 13/4 inches (45 mm) from the edge of the concrete parallel to the length of the wood sill plate.*~~

~~*1.5. Anchor bolts are located a minimum of 15 anchor diameters from the edge of the concrete perpendicular to the length of the wood sill plate.*~~

~~*1.6. The sill plate is 2-inch or 3-inch nominal thickness.*~~

~~2. For the calculation of the in-plane shear strength of anchor bolts attaching cold formed steel track of bearing or nonbearing walls of anchor bolts attaching cold-formed steel track of bearing or nonbearing walls of light-frame construction to foundations or foundation stem walls the in-plane design shear strength in accordance with Sections D.6.2 and D.6.3 need not be computed and Section D.3.3.5.3 shall be deemed to be satisfied provided all of the following are met:~~

~~2.1. The maximum anchor nominal diameter is 5/8 inches (16 mm).~~

~~2.2. Anchors are embedded into concrete a minimum of 7 inches (178 mm).~~

~~2.3. Anchors are located a minimum of 13/4 inches (45 mm) from the edge of the concrete parallel to the length of the track.~~

~~2.4. Anchors are located a minimum of 15 anchor diameters from the edge of the concrete perpendicular to the length of the track.~~

~~2.5. The track is 33 to 68 mil designation thickness.~~

~~Allowable in-plane shear strength of exempt anchors, parallel to the edge of concrete shall be permitted to be determined in accordance with AISI S100, Section E3.3.1.~~

~~3. In light-frame construction, bearing or nonbearing walls, shear strength of concrete anchors less than or equal to 5/8 inch (16 mm) in diameter of sill plate or track to foundation or foundation stem wall need not satisfy Section D.3.3.5.3 (a) through (c) when the design strength of the anchors is determined in accordance with Section D.6.2.1(c).~~

1909.4 ~~***1913.4***~~ ***Shotcrete.***

1909.4.1 ~~***1913.4.1***~~ ***Preconstruction tests.*** *A test panel prepared in accordance with Section 1908.5 is required. Approval from the enforcement agency must be obtained prior to performing test panels.*

1909.4.2 ~~***1913.4.2***~~ ***Surface preparation.*** *Concrete or masonry to receive shotcrete shall have the entire surface thoroughly cleaned and roughened by sand blasting, and just prior to receiving shotcrete, shall be thoroughly cleaned of all debris, dirt and dust. Concrete and masonry shall be wetted before shotcrete is deposited, but not so wet as to overcome suction.*

1909.4.3 ~~***1913.4.3***~~ ***Joints.*** *The film of laitance which forms on the surface of the shotcrete shall be removed within approximately two hours after application by brushing with a stiff broom. If this film is not removed within two hours, it shall be removed by thorough wire brushing or sand blasting. Construction joints over eight hours old shall be thoroughly cleaned with air and water prior to receiving shotcrete.*

1909.4.4 ~~***1913.4.4***~~ ***Forms and ground wires for shotcrete.*** *Forms for shotcrete shall be substantial and rigid. Forms shall be built and placed so as to permit the escape of air and rebound.*

Adequate ground wires, which are to be used as screeds, shall be placed to establish the thickness, surface planes and form of the shotcrete work. All surfaces shall be rodded to these wires.

1909.4.5 ~~***1913.4.5***~~ ***Placing.*** *Shotcrete shall be placed in accordance with ACI 506.*

1909.5 ~~***1913.5***~~ ***Existing concrete structures.*** *The structural use of existing concrete with a core strength less than 1,500 psi (10.3MPa) is not permitted in rehabilitation work.*

For existing concrete structures, sufficient cores shall be taken at representative locations throughout the structure, as designated by the architect or structural engineer, so that knowledge will be had of the in-place strength of the concrete. At least three cores shall be taken from each building for each 4,000 square feet (372 m2) of floor area, or fraction thereof. Cores shall be at least 4 inches (102 mm) in diameter. Cores as small as 2.75 inches (70 mm) in diameter may be allowed by the enforcement agency when reinforcement is closely spaced and the coarse aggregate does not exceed 3/4 inch (19 mm).

Notation for [DSA-SS/CC]
Authority: Education Code § 81053.
Reference: Education Code §§ 81052, 81053, and 81130 through 81147.

CHAPTER 19A

CONCRETE

Adopt and/or codify chapter as amended below:

PROPOSED ADOPTION	DSA-SS	DSA-SS/CC	Comments
Adopt entire chapter			
Adopt entire chapter as amended (amended sections listed below)	X	-	
Adopt only those sections listed below			

(All existing California amendments that are not revised below shall continue without change)

Italics are used for text within Sections 1903A through 1905A of this code to indicate provisions that differ from ACI 318. State of California amendments in these sections are shown in italics and underlined.

...

SECTION 1901A

GENERAL

1901*A*.1 Scope. The provisions of this chapter shall govern the materials, quality control, design and construction of concrete used in structures.

1901A.1.1 Application. *The scope of application of Chapter 19A is as follows:*

1. *Structures regulated by the Division of the State Architect-Structural Safety (DSA-SS), which include those applications listed in Section 1.9.2.1. These applications include public elementary and secondary schools, community colleges and state-owned or state-leased essential services buildings.*

2. [Reserved for OSHPD]

1901A.1.2 Amendments in this chapter. *DSA adopts this chapter and all amendments.*

Exception: *Amendments adopted by only one agency appear in this chapter preceded with the appropriate acronym of the adopting agency, as follows:*

1. *Division of the State Architect-Structural Safety:* ***[DSA-SS]*** *For applications listed in Section 1.9.2.1*

2. [Reserved for OSHPD]

...

1901A.5 Construction documents. The *construction documents* for structural concrete construction shall include:

1. The specified compressive strength of concrete at the stated ages or stages of construction for which each concrete element is designed.
2. The specified strength or grade of reinforcement.
3. The size and location of structural elements, reinforcement and anchors.
4. Provision for dimensional changes resulting from creep, shrinkage and temperature.
5. The magnitude and location of prestressing forces.
6. Anchorage length of reinforcement and location and length of lap splices.
7. Type and location of mechanical and welded splices of reinforcement.
8. Details and location of contraction or isolation joints specified for plain concrete.
9. Minimum concrete compressive strength at time of posttensioning.
10. Stressing sequence for post-tensioning tendons.
11. For structures assigned to *Seismic Design Category* D, E or F, a statement if slab on grade is designed as a structural diaphragm.
12. *Openings larger than 12 inches (305 mm) in any dimension shall be detailed on the structural drawings.*

1901A.6 Special inspections and tests. Special inspections and tests of concrete elements of buildings and structures and concreting operations shall be as required by Chapter *17A and Section 1910A.*

...

SECTION 1903A

SPECIFICATIONS FOR TESTS AND MATERIALS

1903A.1 General. Materials used to produce concrete, concrete itself and testing thereof shall comply with the applicable standards listed in ACI 318.

...

1903A.2 Special Inspections. *Where required, special inspections and tests shall be in accordance with Chapter 17A and Section 1910A.~~1913A.~~*

...

1903A.4 Flat wall insulating concrete form (ICF) systems. *Insulating concrete form material used for forming flat concrete walls shall conform to ASTM E 2634.*

~~***1903A.4 Reporting Requirements*** *– Modify ACI 318 Section 3.2.1 by adding the following:*~~

~~*Each component (a) through (g), when present, as a percentage of total cementitiious materials shall be reported for each mix design.*~~

1903A.5 ~~***1903A.6***~~ ***Aggregates*** *- Modify ACI 318 Section ~~3.3.2~~ 26.4.1.2.1(a).(1) as follows: ~~by adding the following:~~*

~~*Aggregate size limitations waiver shall be approved by the enforcement agency.*~~

~~*Evidence that the aggregate used is not reactive in the presence of alkalis may be required by the enforcement agency. If new aggregate sources are to be used or if past experience indicates problems with existing aggregate sources, test the aggregate for potential alkali-silica reactivity in accordance with to ASTM C 1260 or C 1293 to determine the potential alkali-silica reactivity of the aggregate. If the results indicate an expansion greater than 0.10 percent at 16 days age with ASTM C 1260, or an expansion greater than 0.04 percent at 12 months age with ASTM C 1293, provide mitigation with one of the cementitious material systems noted below such that an expansion of less than 0.10 percent at 16 days age is obtained with ASTM C 1567:*~~

~~*1. Low alkali portland cement containing not more than 0.6 percent total alkali when calculated as sodium oxide, as determined by the method given in ASTM C 114.*~~

~~*2. Blended hydraulic cement, Type IS or IP, conforming to ASTM C 595, except that Type IS cement shall not contain less than 40 percent slag cement.*~~

~~*3. Replacement of not less than 15 percent by weight of the portland cement with a pozzolan conforming to ASTM C 618 for Class N or F materials (Class C is not permitted).*~~

~~*4. Replacement of not less than 40 percent by weight of the portland cement with slag cement conforming to ASTM C 989.*~~

~~*5. Replacement of not less than 5 percent nor more than 10 percent by weight of Portland cement with silica fume conforming to ASTM C 1240.*~~

~~*6. Replacement of portland cement with a ternary blend of portland cement, slag cement and pozzolan such that the resulting blend contains not more than 70 percent portland cement.*~~

~~ASTM C 1567 test shall be performed separately on the fine and coarse aggregate with one requiring the higher percentage of supplementary cementitious materials dictating the required replacement.~~

~~ASTM C 1260, ASTM C 1293 and ASTM C 1567 tests must have been performed within the past three years.~~

(1) ***Normal weight aggregate:****: Aggregate shall be non-reactive as determined by one of the methods in ASTM C33 Appendix XI Methods for Evaluating Potential for Deleterious Expansion Due to Alkali Reactivity of an Aggregate. Aggregates deemed to be deleterious or potentially deleterious may be used with the addition of a material that has been shown to prevent harmful expansion in accordance with Appendix XI of ASTM C33, when approved by the building official.*

1903A.6 ~~[Reserved for OSHPD]~~ ~~***1903A.5 Fly Ash*** *- Add ACI 318 Section 3.2.3 as follows:*~~

~~*Fly ash or other pozzolan can be used as a partial substitute for ASTM C 150 portland cement, as follows:*~~

~~*1. Fly ash or other pozzolan shall conform to ASTM C 618 for Class N or Class F materials (Class C is not permitted), and*~~

~~*2. More than 15 percent by weight of fly ash or other pozzolans shall be permitted to be substituted for ASTM C 150 portland cement if the mix design is proportioned per ACI 318 Section 5.3. See Section 1904A for durability requirements.*~~

~~*3. More than 40 percent by weight of ground-granulated blast-furnace slag conforming to ASTM C 989 shall be permitted to be substituted for ASTM C 150 portland cement if the mix design is proportioned per ACI 318 Section 5.3. See Section 1904A for durability requirements.*~~

1903A.7 ~~***1903A.7 Discontinuous Steel Fibers fiber reinforcement*** *- Not permitted. - Modify ACI 318 Section 3.5.1 by adding the following:*~~

~~*Discontinuous steel fibers are not permitted.*~~

1903A.8 ~~***1903A.8 Welding of reinforcing bars*** *- Modify ACI 318 Section 3.5.2 26.6.4.1(b) by adding the following:*~~

~~*If mill test reports are not available, chemical analysis shall be made of bars representative of the bars to be welded. Bars with a carbon equivalent (C.E.) above 0.75 shall not be welded. Welding shall not be done on or within two bar diameters of any bent portion of a bar that has been bent cold. Welding of crossing bars shall not be permitted for assembly of reinforcement unless authorized by the structural engineer and approved by the enforcement agency per approved procedures.*~~

Shop fusion welded stirrup/tie cage (or spiral assemblies) consisting of low-alloy steel reinforcing stirrups/ties conforming to ASTM A706 and longitudinal holding wires, conforming to ASTM A1064 shall be permitted. The fusion welds shall be made by machines using electric resistance welds. Tack welding of primary reinforcing bars together or to stirrups/ties is not permitted. Fusion welding of holding wires is not permitted on any portion of a reinforcing bar that is or will be bent in accordance with ACI 318 Section 25.3.

SECTION 1904A
DURABILITY REQUIREMENTS

...

1904*A*.1 Structural concrete. Structural concrete shall conform to the durability requirements of ACI 318.

~~***Exception:*** *For Group R-2 and R-3 occupancies not more than three stories above grade plane, the specified compressive strength, f'c, for concrete in basement walls, foundation walls, exterior walls and other vertical surfaces exposed to the weather shall be not less than 3,000 psi (20.7 MPa).*~~

...

SECTION 1905A
MODIFICATIONS TO ACI 318

1905*A*.1 General. The text of ACI 318 shall be modified as indicated in Sections 1905*A*.1.1 through ~~1905.1.21~~ *1905A.1.16*.

~~**1905*A*.1.1 ACI 318, Section 2.3.** Modify existing definitions and add the following definitions to ACI 318, Section 2.3.~~

~~**DESIGN DISPLACEMENT.** Total lateral displacement expected for the design-basis earthquake, *as specified by Section 12.8.6 of ASCE 7.*~~

~~**DETAILED PLAIN CONCRETE STRUCTURAL WALL.** A wall complying with the requirements of Chapter 14, including 14.6.2.~~

~~**ORDINARY PRECAST STRUCTURAL WALL.** A precast wall complying with the requirements of Chapters 1 through 13, 15, 16 and 19 through 26.~~

~~**ORDINARY REINFORCED CONCRETE STRUCTURAL WALL.** A *cast-in-place* wall complying with the requirements of Chapter 14, excluding 14.6.2.~~

~~**ORDINARY STRUCTURAL PLAIN CONCRETE WALL.** A wall complying with the requirements of Chapter 22, *excluding 22.6.7.*~~

~~**SPECIAL STRUCTURAL WALL.** A cast-in-place or precast wall complying with the requirements of 18.2.4 through 18.2.8, 18.10 and 18.11, as applicable, in addition to the requirements for ordinary reinforced concrete structural walls or ordinary precast structural walls, as applicable. Where ASCE 7 refers to a "special reinforced concrete structural wall," it shall be deemed to mean a "special structural wall."~~

1905A.1.1 ~~1905A.1.14~~ ACI 318 Section 4.12.2.2 ~~18.2.4.~~ *Modify ACI 318 Section 4.12.2.2 ~~18.2.4~~ by adding the following:*

Where prestressed concrete elements are restrained from movement, an analysis of the stresses in the prestressed elements and loads in the adjoining structural system induced by the above-described effects shall be made in accordance with PCI Design Handbook. ~~, 7TH Edition.~~

1905A.1.2 ~~1905A.1.13~~ ACI 318, Section 4.12.2.3 ~~18.2.3.~~ *Modify ACI 318 Section 4.12.2.3 ~~18.2.3~~ by adding the following:*

For prestressed concrete members with recessed or dapped ends, an analysis of the connections shall be made in accordance with procedures given in PCI Design Handbook. ~~, 7TH Edition.~~

***1905A.1.3 ~~1905A.1.6~~ ACI 318, Section** 9.6.1.3. **~~10.5.3~~**. Modify ACI 318 Section 9.6.1.3. ~~10.5.3~~ by adding the following:*

This section shall not be used for members that resist seismic loads, except that reinforcement provided for foundation elements for one-story wood-frame or one-story light steel buildings need not be more than one-third greater than that required by analysis for all loading conditions.

1905A.1.4 ~~1905A.1.8~~ ACI 318, Section 11.2.4.1 ~~14.2.6.~~ *Replace ACI 318 Section 11.2.4.1 ~~14.2.6~~ as follows:*

> ***11.2.4.1*** *~~14.2.6~~ - Walls shall be anchored to intersecting elements such as floors or roofs; or to columns, pilasters, buttresses, of intersecting walls; and footings with reinforcement at least equivalent to No. 4 bars at 12 inches (305 mm) on center for each layer of reinforcement.*

1905A.1.5 ~~1905A.1.11~~ ACI 318 Section ~~16~~ 11.7. *Add Section **11.7.6** ~~16.11~~ to ACI 318 as follows:*

11.7.6 ~~16.11~~ - Reinforcement. Perimeters of precast walls shall be reinforced continuously with a minimum of one No. 5 bar extending the full height and width of the wall panel. ~~Bars shall be continuous around corners.~~ Where wall panels do not connect to ~~abut~~ columns or other wall panels to develop at least 75 percent of the horizontal wall steel as noted below, vertical perimeter bars shall be retained by hooked wall bars. ~~Edges of openings in precast walls shall be reinforced with a minimum of one No. 5 bar continuous past corners sufficient to develop the bar.~~

A continuous tie or bond beam shall be provided at the roof line either as a part of the roof structure or part of the wall panels as described in the next paragraph below. This tie may be designed as the edge member of the roof diaphragm but, in any case, shall not be less than equivalent to two No. 6 bars continuous. A continuous tie equivalent to two No. 5 bars minimum shall also be provided either in the footing or with an enlarged section of the floor slab.

Wall panels of shear wall buildings shall be connected to columns or to each other in such a manner as to develop at least 75 percent of the horizontal wall steel. No more than ~~H~~ half of this continuous horizontal reinforcing shall ~~may~~ be concentrated in bond or tie beams at the top and bottom of the walls and at points of intermediate lateral support. If possible, cast in-place joints with reinforcing bars extending from the panels into the joint a sufficient distance to meet the splice requirements of ACI 318 Section 25.5.2 ~~12.15~~ for Class A shall be used. The reinforcing bars or welded tie details shall not be spaced over eight times the wall thickness vertically nor fewer than four used in the wall panel height. Where wall panels are designed for their respective overturning forces, the panel connections need not comply with the requirements of this paragraph.

~~*Where splicing of reinforcement must be made at points of maximum stress or at closer spacing than permitted by ACI 318 Section 7.6, welding may be used when the entire procedure is suitable for the particular quality of steel used and the ambient conditions. Unless the welds develop 125 percent of the specified yield strength of the steel used, reinforcement in the form of continuous bars or fully anchored dowels shall be added to provide 25 percent excess steel area and the welds shall develop not less than the specified yield strength of the steel.*~~

Exception: *Nonbearing, nonshear panels such as nonstructural architectural cladding panels or column covers are not required to meet the provisions of this Section.*

1905A.1.6 ~~1905A.1.10~~ ACI 318, Section 11.9. ~~14.9.~~ *Modify ACI 318 by adding Section 11.9 ~~14.9~~ as follows:*

11.9 ~~14.9~~ - Foundation Walls. *Horizontal reinforcing of concrete foundation walls for wood-frame or light-steel buildings shall consist of the equivalent of not less than one No. 5 bar located at the top and bottom of the wall. Where such walls exceed 3 feet (914 mm) in height, intermediate horizontal reinforcing shall be provided at spacing not to exceed 2 feet (610 mm) on center. Minimum vertical reinforcing shall consist of No. 3 bars at 24 inches (610 mm) on center.*

Where concrete foundation walls or curbs extend above the floor line and support wood-frame or light-steel exterior, bearing or shear walls, they shall be doweled to the foundation wall below with a minimum of No. 3 bars at 24 inches (610 mm) on center. Where the height of the wall above the floor line exceeds 18 inches (457 mm), the wall above and below the floor line shall meet the requirements of ACI 318 Section 11.6 and 11.7. ~~14.3.~~

1905A.1.7 ACI 318, Section 12.7.3. *Add Section 12.7.3.4 to ACI 318 as follows:*

~~***1905A.1.20 ACI 318, Section 21.11.7.*** *Modify ACI 318 Section 21.11.7 by adding Section 21.11.7.7 as follows:*~~

~~*21.11.7.7 – Where boundary members are not required by ACI 318 Section 21.11.7.5, minimum reinforcement parallel to the edges of all diaphragms and the boundaries of all openings shall consist of twice the cross-sectional area of the minimum shear reinforcement required per linear foot of diaphragm.*~~

12.7.3.4 *– At least two No. 5 bars in diaphragms having two layers of reinforcement in both directions and one No. 5 bar in diaphragms having a single layer of reinforcement in both directions shall be provided around openings larger than 12 inches in any dimension in addition to the minimum reinforcement required by Section 12.6.*

1905A.1.8 ~~1905A.1.21~~ *(Chapter 19, Section 1905.1.8)* **ACI 318, Section 17.2.3.** Modify ACI 318 Sections 17.2.3.4.2, 17.2.3.4.3(d) and 17.2.3.5.2 to read as follows:

17.2.3.4.2 - Where the tensile component of the strength-level earthquake force applied to anchors exceeds 20 percent of the total factored anchor tensile force associated with the same

load combination, anchors and their attachments shall be designed in accordance with 17.2.3.4.3. The anchor design tensile strength shall be determined in accordance with 17.2.3.4.4.

> ***Exception:*** *Anchors designed to resist wall out-of-plane forces with design strengths equal to or greater than the force determined in accordance with ASCE 7 Equation 12.11-1 or 12.14-10 and Section 1604A.8.2 of this code shall be deemed to satisfy Section 17.2.3.4.3(d).*

17.2.3.4.3(d) - The anchor or group of anchors shall be designed for the maximum tension obtained from design load combinations that include **E**, with **E** increased by Ω_0. The anchor design tensile strength shall *be calculated from* 17.2.3.4.4.

17.2.3.5.2 – Where the shear component of the strength-level earthquake force applied to anchors exceeds 20 percent of the total factored anchor shear force associated with the same load combination, anchors and their attachments shall be designed in accordance with 17.2.3.5.3. The anchor design shear strength for resisting earthquake forces shall be determined in accordance with 17.5.

Exceptions:

> *1. For the calculation of the in-plane shear strength of anchor bolts attaching wood sill plates of bearing or non-bearing walls of light-frame wood structures to foundations or foundation stem walls, the in-plane design shear strength in accordance with 17.5.2 and 17.5.3 need not be computed and 17.2.3.5.3 shall be deemed to be satisfied provided all of the following are met:*
>
> > *1.1. The allowable in-plane shear strength of the anchor is determined in accordance with AWC NDS Table 11E for lateral design values parallel to grain.*
> >
> > *1.2. The maximum anchor nominal diameter is $^5/_8$ inches (16 mm).*
> >
> > *1.3. Anchor bolts are embedded into concrete a minimum of 7 inches (178 mm).*
> >
> > *1.4. Anchor bolts are located a minimum of $1^3/_4$ inches (45 mm) from the edge of the concrete parallel to the length of the wood sill plate.*

1.5. Anchor bolts are located a minimum of 15 anchor diameters from the edge of the concrete perpendicular to the length of the wood sill plate.

1.6. The sill plate is 2-inch or 3-inch nominal thickness.

2. For the calculation of the in-plane shear strength of anchor bolts attaching cold-formed steel track of bearing or non-bearing walls of anchor bolts attaching cold-formed steel track of bearing or non-bearing walls of light-frame construction to foundations or foundation stem walls the in-plane design shear strength in accordance with 17.5.2 and 17.5.3 need not be computed and 17.2.3.5.3 shall be deemed to be satisfied provided all of the following are met:

2.1. The maximum anchor nominal diameter is $^5/_8$ inches (16 mm).

2.2. Anchors are embedded into concrete a minimum of 7 inches (178 mm).

2.3. Anchors are located a minimum of $1^3/_4$ inches (45 mm) from the edge of the concrete parallel to the length of the track.

2.4. Anchors are located a minimum of 15 anchor diameters from the edge of the concrete perpendicular to the length of the track.

2.5. The track is 33 to 68 mil designation thickness.

Allowable in-plane shear strength of exempt anchors, parallel to the edge of concrete shall be permitted to be determined in accordance with AISI S100 Section E3.3.1.

3. In light-frame construction, bearing or nonbearing walls, shear strength of concrete anchors less than or equal to ~~5/8~~ 1" inch [16mm] in diameter attaching sill plate or track to foundation or foundation stem wall need not satisfy 17.2.3.5.3(a) through (c) when the design strength of the anchors is determined in accordance with 17.5.2.1(c).

1905A.1.9 ~~1905A.1.1~~ ACI 318, Table 19.2.1.1 ~~Section 5.1.1.~~ *Modify ACI 318 Table 19.2.1.1 ~~Section 5.1.1~~ as follows.*

For concrete designed and constructed in accordance with this chapter, f'_c, shall not be less than 3,000 psi (20.7 MPa). Reinforced normal weight concrete with specified compressive strength higher than 8,000 psi (55 MPa) shall require prior approval of structural design method and acceptance criteria by the enforcement agency.

~~***1905A.1.3 ACI 318, Section 8.13.5.*** *Replace ACI 318 Section 8.13.5 as follows:*~~

~~*8.13.5 - Permanent burned clay or concrete tile fillers shall be considered only as forms and shall not be included in the calculations involving shear or bending moments.*~~

~~*The thickness of the concrete slab on the permanent fillers shall be designed as described in ACI 318 Section 8.13.6 as modified in Section 1905A.1.4.*~~

~~***1905A.1.4 ACI 318, Section 8.13.6.*** *Replace ACI 318 Section 8.13.6 as follows:*~~

~~*8.13.6 - Where removable forms or fillers are used, the thickness of the concrete slab shall not be less than 1/12 of the clear distance between joists and in no case less than 2 1/2 inches (64 mm). Such slab shall be reinforced at right angles to the joists with at least the amount of reinforcement required for flexure, considering load concentrations, if any, but in no case shall the reinforcement be less than that required by ACI 318 Section 7.12.*~~

~~***1905A.1.5 ACI 318, Section 8.13.*** *Add Section 8.13.9 to ACI 318 as follows:*~~

~~*8.13.9 Concrete bridging. Concrete bridging shall be provided as follows: one near the center of spans for 20 to 30 feet (6096 mm to 9144 mm) spans and two near the third points of spans over 30 feet (9144 mm). Such bridging shall be either:*~~

~~*(a) A continuous concrete web having a depth equal to the joist and a width not less than 3 1/2 inches (89 mm) reinforced with a minimum of one No. 4 bar in the top and bottom; or*~~

~~*(b) Any other concrete element capable of transferring a concentrated load of 1,000 pounds (4.5 kN) from any joist to the two adjacent joists.*~~

~~*Such bridging shall not be required in roof framing if an individual member is capable of carrying dead load plus a concentrated load of 1,500 pounds (6.7 kN) at any point.*~~

~~**1905A.1.7 ACI 318, Section 12.14.3.** *Add Section 12.14.3.6 to ACI 318 as follows:*~~

~~*12.14.3.6 – Welded splices and mechanical connections shall maintain the clearance and coverage requirements of ACI Sections 7.6 and 7.7.*~~

~~**1905A.1.9 ACI 318, Section 14.5 - Empirical design method.** *Not permitted by DSA.*~~

~~**1905A.1.12 ACI 318, Section 17.5.1.** *Modify ACI 318 Section 17.5.1 by adding Sections 17.5.1.1 and 17.5.1.2 as follows:*~~

~~*17.5.1.1 – Full transfer of horizontal shear forces may be assumed when all of the following are satisfied:*~~

~~*1. Contact surfaces are clean, free of laitance, and intentionally roughened to full amplitude of approximately 1/4 inch (6.4 mm).*~~

~~*2. Minimum ties are provided in accordance with ACI 318 Section 17.6.*~~

~~*3. Web members are designed to resist total vertical shear, and*~~

~~*4. All shear reinforcement is fully anchored into all interconnected elements.*~~

~~*17.5.1.2 – If any of the requirements of ACI 318 Section 17.5.1.1 is not satisfied, horizontal shear shall be investigated in accordance with ACI 318 Section 17.5.3 or 17.5.4.*~~

~~**1905.1.2 ACI 318, Section 18.2.1.** Modify ACI 318 Sections 18.2.1.2 and 18.2.1.6 to read as follows:~~

~~*18.2.1.2 – Structures assigned to Seismic Design Category A* shall satisfy requirements of Chapters 1 through 17 and 19 through 26; Chapter 18 does not apply. Structures assigned to *Seismic Design Category* B, C, D, E or F also shall satisfy 18.2.1.3 through 18.2.1.7, as applicable. *Except for structural elements of plain concrete complying with Section 1905.1.7 of the International*~~

~~*Building Code, structural elements of plain concrete are prohibited in structures assigned to Seismic Design Category C, D, E or F.*~~

~~18.2.1.6 – Structural systems designated as part of the seismic-force-resisting system shall be restricted to those *permitted by ASCE 7.* Except for *Seismic Design Category* A, for which Chapter 18 does not apply, the following provisions shall be satisfied for each structural system designated as part of the seismic-force-resisting system, regardless of the *Seismic Design Category:*~~

~~(a) Ordinary moment frames shall satisfy 18.3.~~
~~(b) Ordinary reinforced concrete structural walls *and ordinary precast structural walls* need not satisfy any provisions in Chapter 18.~~
~~(c) Intermediate moment frames shall satisfy 18.4.~~
~~(d) Intermediate precast *structural* walls shall satisfy 18.5.~~
~~(e) Special moment frames shall satisfy 18.6 through 18.9.~~
~~(f) Special structural walls shall satisfy 18.10.~~
~~((g) Special structural walls constructed using precast concrete shall satisfy 18.11.~~

~~All special moment frames and special structural walls shall also satisfy 18.2.4 through 18.2.8.~~

~~***1905A.1.18 ACI 318, Section 21.9.4.*** *Modify ACI 318 by adding Section 21.9.4.6 as follows:*~~

~~*21.9.4.6 – Walls and portions of walls with $P_u > 0.35P_o$ shall not be considered to contribute to the calculated strength of the structure for resisting earthquake-induced forces. Such walls shall conform to the requirements of ACI 318 Section 21.13.*~~

1905A.1.10 ~~***1905A.1.16***~~ *(Chapter 19, Section 1905.1.3)* **ACI 318, Section 18.5.** ***[DSA-SS]*** Modify ACI 318, Section 18.5, by *replacing Section 18.5.2.1,* adding new Section 18.5.2.2 and renumbering existing Sections 18.5.2.2 and 18.5.2.3 to become 18.5.2.3 and 18.5.2.4, respectively:

18.5.2.1 – In connections between wall panels, yielding shall be restricted to steel elements or reinforcement. In connections between wall panels and the foundation, they shall be designed per Section 1616A.1.16.

18.5.2.2 – Connections that are designed to yield shall be capable of maintaining 80 percent of their design strength at deformation induced by the design displacement or shall use type 2 mechanical splices.

18.5.2.3 – Elements of the connection that are not designed to yield shall develop at least 1.5 S_y.

18.5.2.4 – In structures assigned to SDC D, E or F, Wall piers shall be designed in accordance with 18.10.8 or 18.14 in ACI 318.

1905A.1.11 ~~1905A.1.17~~ ACI 318, Section 18.10.6.5 ~~21.9.2.2.~~ *Modify ACI 318, Section 18.10.6.5 ~~21.9.2.2~~ by adding the following:*

(c) Where boundary members are not required by ACI 318 Section 18.10.6.2 or 18.10.6.3 ~~21.9.6,~~ minimum reinforcement parallel to the edges of all structural walls and the boundaries of all openings shall consist of twice the cross-sectional area of the minimum shear reinforcement required per lineal foot of wall. Horizontal extent of boundary element shall be ~~per~~ in accordance with ACI 318 Section 18.10.6.4 (a), (b) and (c). ~~21.9.6.4 (a) & (b).~~

~~**1908.1.4 ACI 318, Section 18.11.** Modify ACI 318, Section 18.11.2.1, to read as follows:~~

~~18.11.2.1 – Special structural walls constructed using precast concrete shall satisfy all the requirements of 18.10 for cast in place special structural walls in addition to Section 18.5.2.~~

1905A.1.12 ~~1905A.1.19~~ ACI 318, Section 18.12.6 ~~21.11.4.~~ *Add Section 18.12.6.2 to ACI 318 as follows: ~~Modify ACI 318 Section 21.11.4 by adding the following:~~*

18.12.6.2 *Collector and boundary elements in topping slabs placed over precast floor and roof elements shall not be less than 3 inches (76 mm) or 6 d_b thick, where d_b is the diameter of the largest reinforcement in the topping slab.*

1905A.1.13 *(Chapter 19, Section 1905.1.5)* **~~1905.1.5~~ ACI 318, Section 18.13.1.1.** Modify ACI 318, Section 18.13.1.1, to read as follows:

18.13.1.1 – Foundations resisting earthquake-induced forces or transferring earthquake-induced forces between a structure and ground shall comply with the requirements of Section 18.13 and other applicable provisions of ACI 318 *unless modified by Chapter 18A of the California Building Code.*

~~**1905.1.6 ACI 318, Section 14.6.** Modify ACI 318, Section 14.6, by adding new Section 14.6.2 to read as follows:~~

~~*14.6.2.1 – Detailed plain concrete structural walls.*~~
~~*14.6.2.1 – Detailed plain concrete structural walls are walls conforming to the requirements of ordinary structural plain concrete walls and 14.6.2.2.*~~
~~*14.6.2.2 – Reinforcement shall be provided as follows:*~~
~~*(a) Vertical reinforcement of at least 0.20 square inch (129 mm2) in cross-sectional area shall be provided continuously from support to support at each corner, at each side of each opening and at the ends of walls. The continuous vertical bar required beside an opening is permitted to substitute for one of the two No. 5 bars required by 14.6.1.*~~
~~*(b) Horizontal reinforcement at least 0.20 square inch (129 mm2) in cross-sectional area shall be provided:*~~

~~*1. Continuously at structurally connected roof and floor levels and at the top of walls;*~~
~~*2. At the bottom of load-bearing walls or in the top of foundations where doweled to the wall; and*~~
~~*3. At a maximum spacing of 120 inches (3048 mm).*~~

~~*Reinforcement at the top and bottom of openings, where used in determining the maximum spacing specified in Item 3 above, shall be continuous in the wall.*~~

~~**1905.1.7 ACI 318, Section 14.1.4.** Delete ACI 318, Section 14.1.4, and replace with the following:~~
~~*14.1.4 – Plain concrete in structures assigned to Seismic Design Category C, D, E or F.*~~
~~*14.1.4.1 – Structures assigned to Seismic Design Category C, D, E or F shall not have elements of structural plain concrete, except as follows:*~~

~~*(a) Structural plain concrete basement, foundation or other walls below the base are permitted in detached one- and two-family dwellings three stories or less in height constructed with stud-bearing walls. In dwellings assigned to Seismic Design Category D or E, the height of the wall*~~

~~shall not exceed 8 feet (2438 mm), the thickness shall not be less than 71/2 inches (190 mm), and the wall shall retain no more than 4 feet (1219 mm) of unbalanced fill. Walls shall have reinforcement in accordance with 14.6.1.~~

~~(b) Isolated footings of plain concrete supporting pedestals or columns are permitted, provided the projection of the footing beyond the face of the supported member does not exceed the footing thickness.~~

~~**Exception:** In detached one- and two-family dwellings three stories or less in height, the projection of the footing beyond the face of the supported member is permitted to exceed the footing thickness.~~

~~(c) Plain concrete footings supporting walls are permitted, provided the footings have at least two continuous longitudinal reinforcing bars. Bars shall not be smaller than No. 4 and shall have a total area of not less than 0.002 times the gross cross-sectional area of the footing. For footings that exceed 8 inches (203 mm) in thickness, a minimum of one bar shall be provided at the top and bottom of the footing. Continuity of reinforcement shall be provided at corners and intersections.~~

~~**Exceptions:**~~

~~1. In Seismic Design Category A, B, and C, detached one- and two-family dwellings three stories or less in height and constructed with stud bearing walls, plain concrete footings without longitudinal reinforcement supporting walls are permitted.~~

~~2. For foundation systems consisting of a plain concrete footing and a plain concrete stemwall, a minimum of one bar shall be provided at the top of the stemwall and at the bottom of the footing.~~

~~3. Where a slab on ground is cast monolithically with the footing, one No. 5 bar is permitted to be located at either the top of the slab or bottom of the footing.~~

1905A.1.14 ACI 318, Table 21.2.2. *Replace Table 21.2.2 as follows.:*

Table 21.2.2 – Strength reduction factor φ for moment, axial force, or combined moment and axial force

Net tensile	Classification	φ

strain ε_t		Type of transverse reinforcement			
		Spirals conforming to 25.7.3		Other	
$\varepsilon_t \le \varepsilon_{ty}$	Compression-controlled	0.75	(a)	0.65	(b)
$\varepsilon_{ty} < \varepsilon_t < 0.005$	Transition[1][2]	$0.75 + 0.15\frac{\varepsilon_t - \varepsilon_{ty}}{\varepsilon_t^{*}\cancel{0.005} - \varepsilon_{ty}}$	(c)	$0.65 + 0.25\frac{\varepsilon_t - \varepsilon_{ty}}{\varepsilon_t^{*}\cancel{0.005} - \varepsilon_{ty}}$	(d)
$\varepsilon_t \ge 0.005$	Tension-controlled[3]	0.9	(e)	0.9	(f)

[1]For sections classified as transition, it shall be permitted to use φ corresponding to compression-controlled sections.

[2] *ε_t^* is the greater of net tensile strain calculated for $P_n = 0.1A_g f'_c$ and 0.005.*

[3] *For sections with factored axial compression force $P_u \ge 0.1A_g f'_c$, φ shall be calculated using equation (c) or (d) for sections classified as transition, as applicable.*

1905A.1.15 ~~***1905A.1.15***~~ ***ACI 318, Section 24.2.1*** ~~***18.2.***~~ *Add Section 24.2.1.1* ~~*18.2.7*~~ *to ACI 318 as follows:*

24.2.1.1 ~~*18.2.7*~~ *- Span to Depth Ratio. Prestressed Beam and Slab Span to depth ratios for continuous prestressed concrete members shall not exceed the following, except when calculations of deflections and vibration effects prove that greater values may be used without adverse effects:*

Beams 30
One-way Slabs 40
Two-way Floor Slabs..... 40
Two-way Roof Slabs 44

These ratios should be decreased for special conditions such as heavy loads and simple spans.

Maximum deflection criteria shall be in accordance with ACI 318 Sections 24.2.2 ~~*9.5*~~

1905A.1.16 ~~***1905A.1.2***~~ ***ACI 318, Section*** ~~***5.6.2.1***~~ ***26.12.2.1(a).*** *Replace ACI 318 Section* ~~*5.6.2.1*~~ *26.12.2.1(a) by the following.*

26.12.2.1(a) ~~5.6.2.1~~ Samples for strength tests of each class of concrete placed each day shall be taken not less than once a day, or not less than once for each 50 cubic yards (345m^3) of concrete, or not less than once for each 2,000 square feet (186 m^2) of surface area for slabs or walls. Additional samples for seven-day compressive strength tests shall be taken for each class of concrete at the beginning of the concrete work or whenever the mix or aggregate is changed.

SECTION 1906A
STRUCTURAL PLAIN CONCRETE

Not permitted by DSA-SS.

~~**1906.1 Scope.** The design and construction of structural plain concrete, both cast in place and precast, shall comply with the minimum requirements of ACI 318, as modified in Section 1905.~~

~~**Exception:** For Group R-3 occupancies and buildings of other occupancies less than two stories above grade plane of light frame construction, the required footing thickness of ACI 318 is permitted to be reduced to 6 inches (152 mm), provided that the footing does not extend more than 4 inches (102 mm) on either side of the supported wall.~~

...

SECTION 1908A
SHOTCRETE

1908*A*.1 General. Shotcrete is mortar or concrete that is pneumatically projected at high velocity onto a surface. Except as specified in this section, shotcrete shall conform to the requirements of this chapter for ~~plain or~~ reinforced concrete *and the provisions of ACI 506. The specified compressive strength of shotcrete shall not be less than 3,000 psi (20.69 MPa).*

Concrete or masonry to receive shotcrete shall have the entire surface thoroughly cleaned and roughened by sand blasting, and just prior to receiving shotcrete, shall be thoroughly cleaned of all debris, dirt and dust. Concrete and masonry shall be wetted before shotcrete is deposited, but not so wet as to overcome suction. Sand for sand blasting shall be clean, sharp and uniform in size, with no particles that will pass a 50-mesh screen.

...

1908*A*.3 Aggregate. Coarse aggregate, if used, shall not exceed $^3/_4$ inch (19.1 mm).

For shear walls, when total rebar in any direction is more than 0.31 in^2 / ft. or rebar size is larger than # 5, shotcrete shall conform to course aggregate grading No. 2 per Table 1.1 of ACI 506.

...

1908*A*.5 Preconstruction tests. ~~Where preconstruction test are required by Section 1908.4, a~~ *A* test panel shall be shot, cured, cored or sawn, examined and tested prior to commencement of the project. The sample panel shall be representative of the project and simulate job conditions as closely as possible. The panel thickness and reinforcing shall reproduce the thickest and most congested area specified in the structural design. It shall be shot at the same angle, using the same nozzleman and with

the same concrete mix design that will be used on the project. The equipment used in preconstruction testing shall be the same equipment used in the work requiring such testing, unless substitute equipment is *approved* by the *building official*. Reports of preconstruction tests shall be submitted to the *building official* as specified in Section 1704A.5.

...

1908*A*.7 Joints. Except where permitted herein, unfinished work shall not be allowed to stand for more than 30 minutes unless edges are sloped to a thin edge. For structural elements that will be under compression and for construction joints shown on the approved construction documents, square joints are permitted. Before placing additional material adjacent to previously applied work, sloping and square edges shall be cleaned and wetted.

The film of laitance which forms on the surface of the shotcrete shall be removed within approximately two hours after application by brushing with a stiff broom. If this film is not removed within two hours, it shall be removed by thorough wire brushing or sand blasting. Construction joints over eight hours old shall be thoroughly cleaned with air and water prior to receiving shotcrete.

...

1908*A*.10 Strength tests. Strength tests for shotcrete shall be made *in accordance with ASTM C1604* ~~*standards*~~ by an approved agency on specimens that are representative of the work and which have been water soaked for at least 24 hours prior to testing. When the maximum-size aggregate is larger than $^3/_8$ inch (9.5 mm), specimens shall consist of not less than three 3-inch-diameter (76 mm) cores or 3-inch (76 mm) cubes. When the maximum-size aggregate is $^3/_8$ inch (9.5 mm) or smaller, specimens shall consist of not less than 2-inch-diameter (51 mm) cores or 2-inch (51 mm) cubes.

1908*A*.10.1 Sampling. Specimens shall be taken from the in-place work or from test panels, and shall be taken at least once each shift, but not less than one for each 50 cubic yards (38.2 m^3) of shotcrete.

1908*A*.10.2 Panel criteria. When the maximum-size aggregate is larger than $^3/_8$ inch (9.5 mm), the test panels shall have minimum dimensions of 18 inches by 18 inches (457 mm by 457 mm). When the maximum-size aggregate is $^3/_8$ inch (9.5 mm) or smaller, the test panels shall have minimum dimensions of 12 inches by 12 inches (305 mm by 305 mm). Panels shall be shot in the same position as the work, during the course of the work and by the nozzlemen doing the work. The conditions under which the panels are cured shall be the same as the work. *Approval from the enforcement agency shall be obtained prior to performing the test panel method.*

...

1908A.11 ~~***1910A.11***~~ ***Forms and Ground Wires for Shotcrete.*** *Forms for shotcrete shall be substantial and rigid. Forms shall be built and placed so as to permit the escape of air and rebound.*

Adequate ground wires, which are to be used as screeds, shall be placed to establish the thickness, surface planes and form of the shotcrete work. All surfaces shall be rodded to these wires.

1908A.12 ~~***1910A.12***~~ ***Placing.*** *Shotcrete shall be placed in accordance with ACI 506.*

~~[Relocated to Section 2511] SECTION 1911A~~
~~REINFORCED GYPSUM CONCRETE~~

~~**1911A.1 General.** Reinforced gypsum concrete shall comply with the requirements of ASTM C 317 and ASTM C 956. *Reinforced gypsum concrete shall be considered as an alternative system.*~~

...

~~*[Amendments in the CBC 2013 Sections 1908A and 1909A are deleted except those relocated as noted below since model code deleted those sections]*~~

~~[Relocated to Section 1616A.1.20]~~ ~~***1908A.1.1 Power actuated fasteners.*** *Power actuated fasteners qualified in accordance with ICC-ES AC 70 shall be deemed to satisfy the requirements of this section.*~~

~~*Power actuated fasteners shall be permitted in seismic shear for components exempt from permit requirements by Section 1616A.1.18 of this code and for interior nonbearing non-shear wall partitions. Power actuated fastener shall not be used to anchor exterior cladding or curtain wall systems.*~~

...

~~[Relocated to Section 1616A.1.19]~~ ~~***1909A.1.1 Specialty inserts.*** *Specialty inserts, including cast-in-place specialty inserts, tested in accordance with ICC-ES AC 193 shall be deemed to satisfy the requirements of this section.*~~

...

...

SECTION 1909A
RESERVED

...

SECTION 1910A 1913A
CONCRETE, REINFORCEMENT AND ANCHOR TESTING

1910A.1 ~~***1913A.1***~~ **Cementitious material.** *The concrete supplier shall furnish to the enforcement agency certification that the cement proposed for use on the project has been manufactured and tested in compliance with the requirements of ASTM C 150 for portland cement and ASTM C 595 or ASTM C 1157*

for blended hydraulic cement, whichever is applicable. When a mineral admixture or ground granulated blast-furnace slag is proposed for use, the concrete supplier shall furnish to the enforcement agency certification that they have been manufactured and tested in compliance with ASTM C 618 or ASTM C 989, whichever is applicable. The concrete producer shall provide copies of the cementitious material supplier's Certificate of Compliance that represents the materials used by date of shipment for concrete. Cementitious materials without Certification of Compliance shall not be used.

1910A.2 ***~~1913A.2~~*** ***Tests of reinforcing bars.*** *~~Where~~ ~~s~~Samples shall be ~~are~~ taken from bundles as delivered from the mill, with the bundles identified as to heat number and ~~provided~~ the accompanying mill certificate. ~~analyses accompany the report, o~~ One tensile test and one bend test shall be made from a sample ~~specimen~~ from each 10 tons (9080 kg) or fraction thereof of each size of reinforcing steel.*

Where positive identification of the heat number cannot be made or where random samples are to be taken, one series of tests shall be made from each 2 1/2 tons (2270 kg) or fraction thereof of each size of reinforcing steel.

Tests of reinforcing bars may be waived by the structural engineer with the approval of the Building Official for one-story buildings or non-building structures provided they are identified in the construction documents and certified mill test reports are provided to the inspector of record for each shipment of such reinforcement.

1910A.3 ***~~1913A.3~~*** ***Tests for prestressing steel and anchorage.*** *All wires or bars of each size from each mill heat and all strands from each manufactured reel to be shipped to the site shall be assigned an individual lot number and shall be tagged in such a manner that each lot can be accurately identified at the jobsite. Each lot of tendon and anchorage assemblies and bar couplers to be installed shall be likewise identified.*

The following samples of materials and tendons selected by the engineer or the designated testing laboratory from the prestressing steel at the plant or jobsite shall be furnished by the contractor and tested by an approved independent testing agency:

1. *For wire, strand or bars, 7-foot-long (2134 mm) samples shall be taken of the coil of wire or strand reel or rods. A minimum of one random sample per 5,000 pounds (2270 kg) of each heat or lot used on the job shall be selected.*

2. *For prefabricated prestressing tendons other than bars, one completely fabricated tendon 10 feet (3048 mm) in length between grips with anchorage assembly at one end shall be furnished for each size and type of tendon and anchorage assembly.*

   Variations of the bearing plate size need not be considered.

   The anchorages of unbonded tendons shall develop at least 95 percent of the minimum specified ultimate strength of the pre-stressing steel. The total elongation of the tendon under ultimate load shall not be less than 2 percent measured in a minimum gage length of 10 feet (3048 mm).

   Anchorages of bonded tendons shall develop at least 90 percent of the minimum specified strength of the prestressing steel tested in an unbonded state. All couplings shall develop at least 95 percent of the minimum specified strength of the prestressing steel and shall not reduce the elongation at rupture below the requirements of the tendon itself.

3. *If the prestressing tendon is a bar, one 7-foot (2134 mm) length complete with one end anchorage shall be furnished and, in addition, if couplers are to be used with the bar, two 4-foot (1219 mm) lengths of bar fabricated to fit and equipped with one coupler shall be furnished.*

4. *Mill tests of materials used for end anchorages shall be furnished. In addition, at least one Brinnell hardness test shall be made of each thickness of bearing plate.*

1910A.4 ~~***1913A.4***~~ **Composite construction cores.** *Cores of the completed composite concrete construction shall be taken to demonstrate the shear strength along the contact surfaces. The cores shall be tested when the cast-in-place concrete is approximately 28 days old and shall be tested by a shear loading parallel to the joint between the precast concrete and the cast-in-place concrete. The minimum unit shear strength of the contact surface area of the core shall not be less than 100 psi (689 kPa).*

At least one core shall be taken from each building for each 5,000 square feet (465m2) of area of composite concrete construction and not less than three cores shall be taken from each project. The architect or structural engineer in responsible charge of the project or his or her representative shall designate the location for sampling.

~~***1913A.5 Tests of shotcrete.*** *Testing of shotcrete shall follow the provisions of Section 1910A and the general requirements of ACI 318 Section 5.6.*~~

~~***1913A.6 Gypsum field tests.*** *Field tests shall be made during construction to verify gypsum strength. One sample consisting of three specimens shall be made for each 5,000 square feet (465 m²) or fraction thereof of all gypsum poured, but not less than one sample shall be taken from each half day's pour.*~~

1910A.5 ~~***1913A.7***~~ **Tests for Post-Installed Anchors in Concrete.** *When post-installed anchors are used in lieu of cast-in place bolts, the installation verification test loads, frequency, and acceptance criteria shall be in accordance with this section.*

1910A.5.1 ~~***1913A.7.1***~~ **General.** *Test loads or torques and acceptance criteria shall be shown on the construction documents.*

If any anchor fails testing, all anchors of the same type shall be tested, which are installed by the same trade, not previously tested until twenty (20) consecutive anchors pass, then resume the initial test frequency.

1910A.5.2 ~~***1913A.7.5***~~ **Testing Procedure.** *The test procedure shall be as permitted by an approved ~~test~~ evaluation report using criteria adopted in this code. All ~~other~~ post-installed anchors shall be tension tested.*

> ***Exception [DSA-SS]:*** *Torque controlled post installed anchors and screw type anchors shall be permitted to be tested using torque based on an approved test report using criteria adopted in this code.*

Alternatively, the ~~M~~manufacturer's recommendation for testing may be approved by the enforcement agency based on an approved test report using criteria adopted in this code.

1910A.5.3 ~~***1913A.7.3***~~ **Test Frequency.** *When post-installed anchors are used for sill plate bolting applications, 10 percent of the anchors shall be tested.*

When post-installed anchors are used for other structural applications, all such anchors shall be tested.

When post-installed anchors are used for nonstructural applications such as equipment anchorage, 50 percent or alternate bolts in a group, including at least one-half the anchors in each group, shall be tested.

The testing of the post-installed anchors shall be done in the presence of the special inspector and a report of the test results shall be submitted to the enforcement agency.

Exceptions:

1. *Undercut anchors that allow visual confirmation of full set shall not require testing.*

2. *Where the factored design tension on anchors is less than 100 lbs. and those anchors are clearly noted on the approved construction documents, only 10 percent of those anchors shall be tested.*

3. *Where adhesive anchor systems are used to install reinforcing dowel bars in hardened concrete, only 25% of the dowels shall be tested if all of the following conditions are met:*

   a. *The dowels are used exclusively to transmit shear forces across joints between existing and new concrete.*
   b. *The number of dowels in any one member equals or exceeds 12.*
   c. *The dowels are uniformly distributed across seismic force resisting members (such as shear walls, collectors and diaphragms).*

   Anchors to be tested shall be selected at random by the special inspector/Inspector Of Record (IOR).

4. *Testing of shear dowels across cold joints in slabs on grade, where the slab is not part of the lateral force-resisting system shall not be required.*

5. *Testing is not required for power actuated fasteners used to attach tracks of interior non-shear wall partitions for shear only, where there are at least three fasteners per segment of track.*

1910A.5.4 ***~~1913A.7.2~~*** ***Test Loads.*** *Required test loads shall be determined by one of the following methods:*

1. *Twice the maximum allowable tension load or one and a quarter (1- 1/4) times the maximum design strength of anchors as provided in an approved test report using criteria adopted in this code or determined in accordance with Chapter 17 ~~Appendix D~~ of ACI 318.*

Tension test load need not exceed 80% of the nominal yield strength of the anchor element (= 0.8 A_{se} f_{ya}).

2. *The manufacturer's recommended installation torque based on an approved test report using criteria adopted in this code.*

1910A.5.5 ***~~1913A.7.4~~*** ***Test Acceptance Criteria.*** *Acceptance criteria for post-installed anchors shall be based on an approved test report using criteria adopted in this code. Field tests shall satisfy the following minimum requirements.*

1. Hydraulic Ram Method:

Anchors tested with a hydraulic jack or spring loaded ~~devices~~ apparatus shall maintain the test load for a minimum of 15 seconds and shall exhibit no discernable movement during the tension test, e.g., as evidenced by loosening of the washer under the nut.

For adhesive anchors, where other than bond is being tested, the testing apparatus support ~~device~~ shall not be located within 1.5 times the anchor's embedment depth to avoid restricting the concrete shear cone type failure mechanism from occurring.

2. Torque Wrench Method:

Torque controlled post installed ~~A~~ anchors tested with a calibrated torque wrench shall ~~must~~ attain the specified torque within ½ turn of the nut; or one-quarter (1/4) turn of the nut for a 3/8 in. sleeve anchor only.

~~Exceptions:~~

~~a. Wedge or Sleeve type:~~
~~One-quarter (1/4) turn of the nut for a 3/8 in. sleeve anchor only.~~

*~~b.~~ **[DSA-SS]** Screw~~Threaded~~ ~~T~~type~~:~~ anchors tested with a calibrated torque wrench shall attain the specified torque within ~~O~~one-quarter (1/4) turn of the screw after initial seating of the screw head.*

SECTION 1911A ~~1914A~~
EXISTING CONCRETE STRUCTURES

1911A.1 ~~1914A.1~~ Existing Concrete Structures.

The structural use of existing concrete with a core strength less than 1,500 psi (10.3MPa) is not permitted in rehabilitation work.

For existing concrete structures, sufficient cores shall be taken at representative locations throughout the structure, as designated by the architect or structural engineer, so that knowledge will be had of the in-place strength of the concrete. At least three cores shall be taken from each building for each 4,000 square feet (372 m2) of floor area, or fraction thereof. Cores shall be at least 4 inches (102 mm) in diameter. Cores as small as 2.75 inches (70 mm) in diameter may be allowed by the enforcement agency when reinforcement is closely spaced and the coarse aggregate does not exceed 3/4 inch (19 mm).

***1911A.2 ~~1914A.2~~ Crack Repair by Epoxy Injection.** Crack Repair of concrete and masonry member by epoxy injection shall conform to all requirements of ACI 503.7.*

***1911A.3 ~~1914A.3~~ Concrete Strengthening by Externally Bonded Fiber Reinforced Polymer (FRP).** Design and construction of externally bonded FRP systems for strengthening concrete structures shall be in accordance with ACI 440.2R.*

Exceptions: *1) Near-Surface Mounted (NSM) FRP bars shall not be permitted.*
2) Strengthening of shear walls and diaphragms (including chords and collectors)

PROPOSED ADOPTION	DSA-SS	DSA-SS/CC	Comments
Adopt entire chapter			
Adopt entire chapter as amended	X	X	
Adopt only those sections listed below			
PROPOSED ADOPTION	DSA-SS	DSA-SS/CC	Comments

shall be considered as an alternative system.

Design capacities, reliability, serviceability of FRP materials shall be permitted to be established in accordance with ICC-ES AC 125. Minimum inspection requirements of FRP composite systems shall be in accordance with ICC-ES AC 178.

(All existing amendments that are not revised above shall continue without any change)

Notation for [DSA-SS]
Authority: Education Code § 17310 and 81142, and H&S Code §16022.
Reference: Education Code §§ 17280 through 17317, and 81130 through 81147, and Health and Safety Code §§16000 through 16023.

CHAPTER 20

ALUMINUM

Adopt and/or codify chapter as amended below:

Adopt entire chapter			
Adopt entire chapter as amended	X	X	
Adopt only those sections listed below			

All existing California amendments that are not revised below shall continue without change.

SECTION 2001
GENERAL

2001.1 Scope. This chapter shall govern the quality, design, fabrication and erection of aluminum.

SECTION 2002
MATERIALS

2002.1 General. Aluminum used for structural purposes in buildings and structures shall comply with AA ASM 35 and AA ADM 1. The nominal loads shall be the minimum design loads required by Chapter 16.

SECTION 2003 - INSPECTION

2003.1 Inspection. [DSA –SS & DSA –SS/CC] *Inspection of Aluminum shall be required in accordance with the requirements for steel in Chapter 17A.*

All existing amendments are continued without any change.

Notation for [DSA-SS]
Authority: Education Code § 17310 and 81142, and H&S Code §16022.
Reference: Education Code §§ 17280 through 17317, and 81130 through 81147, and Health and Safety Code §§16000 through 16023.

Notation for [DSA-SS/CC]
Authority: Education Code § 81053.
Reference: Education Code §§ 81052, 81053, and 81130 through 81147.

CHAPTER 21

MASONRY

Adopt and/or codify chapter as amended below:

PROPOSED ADOPTION	DSA-SS	DSA-SS/CC	Comments
Adopt entire chapter without amendments			
Adopt entire chapter with amendments listed below	-	X	
Adopt only those sections listed below			
2101.1.1		X	
2101.1.2		X	
2101.1.3		X	
2101.1.4		X	
2114		X	
~~*2114.1*~~		~~X~~	
~~*2114.2*~~		~~X~~	
~~*2114.3*~~		~~X~~	
~~*2114.4*~~		~~X~~	
~~*2114.5*~~		~~X~~	
~~*2114.6.1*~~		~~X~~	
~~*2114.7*~~		~~X~~	
~~*2114.8*~~		~~X~~	
~~*2114.9.1*~~		~~X~~	
~~*2114.9.2.1*~~		~~X~~	
~~*2114.9.3*~~		~~X~~	
~~*2114.10*~~		~~X~~	
~~*2114.11.1*~~		~~X~~	
~~*2114.11.2*~~		~~X~~	
~~*2114.12*~~		~~X~~	
~~*2114.13*~~		~~X~~	
~~*2114.14*~~		~~X~~	

All existing California amendments that are not revised below shall continue without change.

SECTION 2101
GENERAL

2101.1 Scope. This chapter shall govern the materials, design, construction and quality of masonry.

2101.1.1 Division of the State Architect-Structural Safety/Community Colleges (DSA-SS/CC)

Community college buildings regulated by the Division of the State Architect-Structural Safety/Community Colleges (DSA-SS/CC) as listed in Section 1.9.2.2.

2101.1.2 Amendments in this chapter. *DSA-SS/CC adopts this chapter and all amendments.*

Exception: *Division of the State Architect-Structural Safety/Community Colleges (DSA-SS/CC) amendments appear in this chapter preceded with the appropriate acronym, as follows:*

[DSA-SS/CC] *- For community college buildings listed in Section 1.9.2.2.*

2101.1.3 Reference to other chapters. [DSA-SS/CC] *Where reference within this chapter is made to sections in Chapters 17 and 18, the provisions in Chapters 17A and 18A respectively shall apply instead.*

2101.1.4 Amendments. [DSA-SS/CC] *See Section 2114 for additional requirements.*

...

SECTION 2114

ADDITIONAL REQUIREMENTS FOR COMMUNITY COLLEGES [DSA-SS/CC]

2114.1 General. *In addition to the provisions of this chapter, the following requirements shall apply to community college buildings regulated by the Division of the State Architect- Structural Safety/Community Colleges (DSA-SS/CC).*

2114.1.1 Prohibitions. *The following design, systems and materials are not permitted by DSA:*

1. Unreinforced masonry

2. Autoclaved aerated concrete (AAC) masonry

3. Empirical design of masonry

4. Ordinary reinforced masonry shear walls

5. Intermediate reinforced masonry shear walls

6. Prestressed masonry shear walls

7. Direct design of masonry

~~***2114.2 Mortar.*** *Type S mortar conforming to ASTM C 270 shall be used for glass unit masonry.*~~

~~***2114.3 Additives and Admixtures.***~~

~~***2114.3.1 General.*** *Additives and admixtures to mortar or grout shall not be used unless approved by the enforcement agency.*~~

~~***2114.3.2 Antifreeze compounds.*** *Antifreeze liquids, chloride salts or other such substances shall not be used in mortar or grout.*~~

2114.2 ~~***2114.3.3***~~ ***Air entrainment.*** *Air-entraining substances shall not be used in* ~~*mortar or*~~ *grout unless tests are conducted to determine compliance with the requirements of this code.*

~~***2114.4 Tolerances.*** *The maximum thickness of the initial bed joint in fully grouted masonry walls shall not exceed 11/4 in. (31.7 mm).*~~

~~***2114.5 Glass unit masonry.*** *All mortar for glass unit masonry contact surfaces shall be treated to ensure adhesion between mortar and glass.*~~

2114.3 ~~***2114.6***~~ ***Grouted masonry.***

2114.3.1 ~~***2114.6.1***~~ ***General conditions.*** *Prior to grouting, the grout space shall be clean so that all spaces to be filled with grout do not contain mortar projections greater than ¼ inch (6.4 mm), mortar droppings and other foreign material.*

All cells shall be solidly filled with grout~~*, except as provided in Section 2114.14*~~*.*

Exception: ~~[illegible]~~ *Reinforced hollow-unit masonry laid in running bond used for freestanding site walls* ~~*fences and*~~ *or interior nonbearing non-shear wall partitions may be* ~~*of hollow-unit masonry construction*~~ *grouted only in cells containing vertical and horizontal reinforcement.*

Reinforcement and embedded items shall be clean, properly positioned and securely anchored against moving prior to grouting. Bolts shall be accurately set with templates or by approved equivalent means and held in place to prevent dislocation during grouting. Reinforcement, embedded items and bolts shall be solidly embedded in grout. Anchor bolts in the face shells of hollow masonry units shall be positioned to maintain a minimum of 1/2 inch of grout between the bolt and the face shell.

The grouting of any section of wall shall be completed in one day with no interruptions greater than one hour. At the time of laying, all masonry units shall be free of dust and dirt.

Grout pours greater than 12 inches (300 mm) in height shall be consolidated by mechanical vibration during placement to fill the grout space before loss of plasticity, and reconsolidated by mechanical vibration to minimize voids due to water loss. Grout pours less than 12 inches in height may be puddled.

Between grout pours or where grouting has been stopped more than an hour, a horizontal construction joint shall be formed by stopping all wythes at the same elevation and with the grout stopping a minimum of 11/2 inches (38 mm) below a mortar joint, except at the top of the wall. Where bond beams occur, the grout pour shall be stopped a minimum of 1/2 inch (12.7 mm) below the top of the masonry.

The construction documents shall completely describe grouting procedures, subject to approval of DSA.

2114.4 ~~***2114.7***~~ ***Aluminum equipment.*** *Grout shall not be handled nor pumped utilizing aluminum equipment unless it can be demonstrated with the materials and equipment to be used that there will be no deleterious effect on the strength of the grout.*

2114.5 ~~***2114.8***~~ ***Specified compressive strength.*** *The specified compressive strength, f 'm , assumed in design shall be not less than 2,000* ~~*1,500*~~ *psi (10.34 MPa) for all masonry construction using materials and details of construction required herein. Testing of the constructed masonry shall be provided in accordance with Section 2114.6.2* ~~*2114.9.3*~~*.*

In no case shall the f 'm assumed in design exceed 3,000 psi (20.68 MPa).

2114.6 ~~***2114.9***~~ ***Additional testing requirements.***

2114.6.1 ~~***2114.9.1***~~ ***Mortar and grout tests.*** *At the beginning of all masonry work, at least one test sample of the mortar* ~~*and grout*~~ *shall be taken on three successive working days and at least at one-week intervals thereafter. Where mortar is based on a proportion specification, mortar shall be sampled and tested during construction in accordance with ASTM C780 Annex 4 and 5 to verify the proportions specified in ASTM C270, Table 2. Where mortar is based on a property specification, mortar shall be laboratory prepared and tested prior to construction in accordance with ASTM C780 to verify the properties specified in ASTM C270, Table 1 and field sampled and tested during construction in accordance with ASTM C780 to verify the proportions with the laboratory tests. Mortar sampling and testing is not required for approved preblended mortars in conformance with ASTM C270.*

Samples of grout shall be taken for each mix design, each day grout is placed, and not less than every 5,000 square feet of masonry wall area. The grout ~~*They*~~ *shall meet the minimum strength requirement given in ASTM C476/TMS 602 Section 2.2.* ~~*Sections 2103A.9 and 2103A.13*~~ *for mortar and grout.* ~~*respectively.*~~ *Test specimens for* ~~*mortar and*~~ *grout shall be made as set forth in* ~~*ASTM C 1586 and*~~ *ASTM C 1019.*

Additional samples shall be taken whenever any change in materials or job conditions occur, as determined by the building official. ~~*or whenever in the judgment of the architect, structural engineer or the enforcement agency such tests are necessary to determine the quality of the material.*~~ *When the prism test method* ~~*of Section 2105A.2.2.2*~~ *is used during construction, the tests in this section are not required.*

Exception: *For non-bearing non-shear masonry walls not exceeding total wall height of 12' above wall base, mortar test shall be permitted to be limited to those at the beginning of masonry work for each mix design.*

~~**2114.9.2 Prism test method.**~~

~~**2114.9.2.1 Number of prisms per test.** *Prior to the start of construction, three prisms shall be constructed and tested in accordance with ASTM C 1314. A set of three masonry prisms shall be built during construction in accordance with ASTM C 1314 for each 5,000 square feet (465 m2) of wall area, but not less than one set of three prisms for the project. Each set of prisms shall equal or exceed f 'm.*~~

2114.6.2 ~~***2114.9.3***~~ **Masonry core testing.** *Not less than two cores shall be taken from each building for each 5,000 square feet (465 m^2) ~~of the greater~~ of the masonry wall area ~~or the floor area~~ or fraction thereof. ~~The architect or structural engineer in responsible charge of the project or his/her representative or the inspector of record shall select the areas for sampling.~~ The ~~inspector of record~~ approved agency shall perform or observe the coring of the masonry walls and sample locations shall be subject to approval of the registered design professional.*

Cores samples shall comply with the following:

1. *Cored no sooner than 7 days after grouting of the selected area;*
2. *~~b~~ Be a minimum of 3-3/4" in nominal diameter; and*
3. *Sampled ~~shall be taken~~ in such a manner as to exclude any masonry unit webs, mortar joint, or ~~and~~ reinforcing steel. If all cells contain reinforcement, alternate core locations or means to detect void or delamination shall be selected by the registered design professional and approved by the building official.*

~~*If vertical reinforcing steel is placed such that cores will include reinforcing steel, core testing may be waived by the design professional in responsible charge, as approved by the enforcement agency.*~~

Visual examination of all cores shall be made by an approved agency ~~a laboratory acceptable to the building official~~ and the condition of the cores reported as required by the California Administrative Code. ~~The~~ Sshear test shall test both joints between the grout core and the outside wythes or face shell of the masonry.~~All cores taken shall be tested in shear~~ 28 days after grouting of the sample area using a shear test apparatus acceptable to the enforcement agency. ~~Shear testing apparatus shall be of a design approved by the enforcement agency.~~ Core samples shall not be soaked before testing. Core samples to be tested shall be stored in sealed plastic bags or non-absorbent containers immediately after coring and for at least 5 days prior to testing. The average unit shear value for each pair of cores (4 shear tests) from each 5,000 square feet of wall area (or less) on the cross section of ~~all the cores~~ shall not be less than 2.5 $\sqrt{f'm}$ psi.

All cores shall be submitted to an approved agency ~~the laboratory, acceptable to the building official,~~ for examination, ~~regardless of whether~~ even where the core specimens failed ~~outside wythe or face shells separated~~ during the cutting operation. The approved agency ~~laboratory~~ shall report the location where each core was taken, the findings of their visual examination of each core, identify which cores were selected for shear testing, and the results of the shear tests.

Exceptions:

1. *Core sampling and testing is not required for non-bearing non-shear masonry walls, not exceeding total wall height of 12' above wall base, built with single-wythe hollow unit concrete masonry that attaches opposite face shells using webs*

cast as single unit, when designed using an f'_m not exceeding 2,000 psi (13.79 MPa)..

2. *An infrared thermographic survey or other nondestructive test procedures, shall be permitted to be approved as an alternative system to detect voids or delamination in grouted masonry in-lieu of core sampling and testing.*

2114.7 ~~2114.10~~ Modifications to TMS 402/ACI 530/ASCE 5.

2114.7.1 ~~2114.10.1~~ Modify TMS 402/ACI 530/ASCE 5, Section 7.4.4 ~~1.18~~ as follows:

1. ***Minimum reinforcement requirements for masonry walls.*** *The total area of reinforcement in reinforced masonry walls shall not be less than 0.003 times the sectional area of the wall. Neither the horizontal nor the vertical reinforcement shall be less than one third of the total. Horizontal and vertical reinforcement shall be spaced at not more than 24 inches (610 mm) center to center. The minimum reinforcing shall be No. 4, except that No. 3 bars may be used for ties and stirrups. Vertical wall reinforcement shall have dowels of equal size and equal matched spacing in all footings. Reinforcement shall be continuous around wall corners and through intersections. Only reinforcement which is continuous in the wall shall be considered in computing the minimum area of reinforcement. Reinforcement with splices conforming to TMS 402/ACI 530/ASCE 5 ~~as modified by Sections 2107 and 2108~~ shall be considered as continuous reinforcement.*

Horizontal reinforcing ~~ement~~ bars in bond beams shall be provided in the top of footings, at the top of wall openings, at roof and floor levels, and at the top of parapet walls. For walls 12 inches (nominal) (305 mm) or more in thickness, horizontal and vertical reinforcement shall be equally divided into two layers, except where designed as retaining walls. Where reinforcement is added above the minimum requirements, such additional reinforcement need not be so divided.

In bearing walls of every type of reinforced masonry, there shall be trim reinforcement of not less than one No. 5 bar or two No. 4 bars on all sides of, and adjacent to, every opening which exceeds 16 inches (406 mm) in either direction, and such bars shall extend not less than 48 diameters, but in no case less than 24 inches (610 mm) beyond the corners of the opening. The bars required by this paragraph shall be in addition to the minimum reinforcement elsewhere required.

When the reinforcement in bearing walls is designed, placed and anchored in position as for columns, the allowable stresses shall be as for columns.

Joint reinforcement shall not be used as principal reinforcement in masonry ~~designed by the strength design method~~.

2. ***Minimum reinforcement for masonry columns.*** *The spacing of column ties shall be as follows: not greater than 8 bar diameters, 24 tie diameters, or one half the least dimension of the column for the full column height. Ties shall be at least 3/8 inch (10 mm) in diameter and shall be embedded in grout. Top tie shall be within 2 inches (51 mm) of*

the top of the column or of the bottom of the horizontal bar in the supported beam.

*3. **Anchor bolts.** Bent bar anchor bolts shall not be allowed. The maximum size anchor shall be 1/2-inch (13 mm) diameter for 6-inch (152 mm) nominal masonry, 3/4-inch (19 mm) diameter for 8-inch (203 mm) nominal masonry, 7/8-inch (22 mm) diameter for 10-inch (254 mm) nominal masonry, and 1-inch (25mm) diameter for 12-inch (304.8 mm) nominal masonry.*

2114.8 ~~2114.11~~ Additional requirements for allowable stress design.

2114.8.1 ~~2114.11.1~~ TMS 402/ACI 530/ASCE 5 ~~[DSA-SS/CC]~~ *Modify by adding Section 8.1.7 ~~2.1.8~~ as follows:*

8.1.7 ~~2.1.8~~ – Walls and piers.

Thickness of walls. *For thickness limitations of walls as specified in this chapter, nominal thickness shall be used. Stresses shall be determined on the basis of the net thickness of the masonry, with consideration for reduction, such as raked joints.*

The thickness of masonry walls shall be designed so that allowable maximum stresses specified in this chapter are not exceeded. Also, no masonry wall shall exceed the height or length-to-thickness ratio or the minimum thickness as specified in this chapter and as set forth in Table 2114.8.1 ~~2114.11.1~~.

Piers. *Every pier or wall section which width is less than three times its thickness shall be designed and constructed as required for columns if such pier is a structural member. Every pier or wall section which width is between three and five times its thickness or less than one half the height of adjacent openings shall have all horizontal steel in the form of ties except that in walls 12 inches (305 mm) or less in thickness such steel may be in the form of hair-pins.*

2114.8.2 ~~2114.11.2~~ TMS 402/ACI 530/ASCE 5, Section 2.1.7.7.1.1, lap splices. *Modify the requirements of Section 2107.2.1 by adding the following:*

Lap splices need not be greater than 72 bar diameters.

TABLE 2114.8.1 ~~2114.11.1~~

MINIMUM THICKNESS OF MASONRY WALLS[1, 2] ~~[DSA-SS/CC]~~

TYPE OF MASONRY	MAXIMUM RATIO UNSUPPORTED HEIGHT OR LENGTH TO THICKNESS[2,3]	NOMINAL MINIMUM THICKNESS (inches)
BEARING OR SHEAR WALLS:		
1. Stone masonry	14	16
2. Reinforced grouted masonry	25	6

3. Reinforced hollow-unit masonry	25	6
NONBEARING WALLS:		
4. Exterior reinforced walls	30	6
5. Interior partitions reinforced	36	4

For walls of varying thickness, use the least thickness when determining the height or length to thickness ratio.

2. In determining the height or length-to-thickness ratio of a cantilevered wall, the dimension to be used shall be twice the dimension of the end of the wall from the lateral support.

3. Cantilevered walls not part of a building and not carrying applied vertical loads need not meet these minimum requirements but their design must comply with stress and overturning requirements

2114.9 ***~~2114.12~~*** **Glass unit masonry construction.** *Masonry ~~of~~ glass block~~s~~ walls or panels shall be designed for seismic forces. ~~permitted in non-load-bearing exterior or interior walls and shall conform to the requirements of Section 2115A.~~ Stresses in glass block shall not be utilized. ~~Glass block may be solid or hollow and may contain inserts.~~*

~~2114.13 Nonbearing walls.~~ *~~All nonbearing masonry walls shall be reinforced as specified in Section 2114.10.1.1. Fences and interior nonbearing nonshear walls may be of hollow-unit masonry construction grouted in cells containing vertical and horizontal reinforcement. Nonbearing walls maybe used to carry a superimposed load of not more than 200 pounds per linear foot (2.92 kN/m).~~*

*~~1. **Thickness.** Every nonbearing masonry wall shall be so constructed and have a sufficient thickness to withstand all vertical loads and horizontal loads, but in no case shall the thickness of such walls be less than the values set forth in Table 2114.11.1. Plaster shall not be considered as contributing to the thickness of a wall in computing the height-to-thickness ratio.~~*

*~~2. **Anchorage.** All nonbearing walls shall be anchored as required by Section 1604.8.2 and ASCE 7 Chapter 13. Suspended ceilings or other nonstructural elements shall not be used to provide anchorage for masonry walls.~~*

~~2114.14 Masonry screen walls.~~ *~~Masonry units may be used in nonbearing decorative screen walls. Units may be laid up in panels with units on edge with the open pattern of the unit exposed in the completed wall.~~*

*~~1. **Horizontal forces.** The panels shall be capable of spanning between supports to resist the horizontal forces specified in Chapter 16. Wind loads shall be based on gross projected area of the block.~~*

*~~2. **Mortar joints.** Horizontal and vertical joints shall not be less than 1/4 inch (6 mm) thick. All joints shall be completely filled with mortar and shall be "shoved joint" work. The units of a panel shall be so arranged that either the horizontal or the vertical joint containing reinforcing is continuous without offset. This continuous joint shall be reinforced with a minimum of 0.03 square inch (19 mm2) of reinforcing steel and maximum spacing of 16 in. on center. Reinforcement may be embedded in mortar.~~*

~~*3. **Reinforcement.** Joint reinforcement may be composed of two wires made with welded ladder or trussed wire cross ties. In calculating the resisting capacity of the system, compression and tension in the spaced wires may be utilized. Ladder wire reinforcement shall not be spliced and shall be the widest that the mortar joint will accommodate, allowing 1/2 inch (13 mm) of mortar cover.*~~

~~*4. **Size of panels.** The maximum size of panels shall be 144 square feet (13.4 m2), with the maximum dimension in either direction of 15 feet (4572 mm). The specified thickness of the units for exterior applications shall not be less than 37/8 in.*~~

~~*5. **Panel support.** Each panel shall be supported on all edges by a structural member of concrete, masonry or steel. Supports at the top and ends of the panel shall be by means of confinement of the masonry by at least 1 inch (25 mm) into and between the flanges of a steel channel. The space between the end of the panel and the web of the channel shall be filled with resilient material. The use of equivalent configuration in other steel section or in masonry or concrete is acceptable.*~~

Notation for [DSA-SS/CC]
Authority: Education Code § 81053.
Reference: Education Code §§ 81052, 81053, and 81130 through 81147.

CHAPTER 21*A*

MASONRY

Adopt and/or codify chapter as amended below:

PROPOSED ADOPTION	DSA-SS	DSA-SS/CC	Comments
Adopt entire chapter			
Adopt entire chapter as amended	X	-	
Adopt only those sections listed below			

All existing California amendments that are not revised below shall continue without change.

SECTION 2101*A*

GENERAL

2101*A*.1 Scope. This chapter shall govern the materials, design, construction and quality of masonry.

2101A.1.1 Application. *The scope of application of Chapter 21A is as follows:*

1. *Applications listed in Section 1.9.2.1 regulated by the Division of the State Architect-Structural Safety (DSASS). These applications include public elementary and secondary schools, community colleges and state-owned or state-leased essential services buildings.*

2. [Reserved for OSHPD]

2101A.1.2 Amendments in this chapter. *DSA-SS adopt this chapter and all amendments.*

Exception: *Amendments adopted by only one agency appear in this chapter preceded with the appropriate acronym of the adopting agency, as follows:*

1. *Division of the State Architect-Structural Safety: [DSA-SS] For applications listed in Section 1.9.2.1.*
2. [Reserved for OSHPD]

2101A.1.3 Prohibition: *The following design methods, systems, and materials are not permitted by DSA-SS:*

1. *Unreinforced Masonry.*
2. *Autoclaved Aerated Concrete (AAC) Masonry.*
3. *Empirical Design of Masonry.*
4. *Adobe Construction.*
5. *Ordinary Reinforced Masonry Shear Walls.*
6. *Intermediate Reinforced Masonry Shear Walls.*
7. *Prestressed Masonry Shear Walls.*
8. *Direct Design of Masonry.*

...

2101A.2 Design methods. Masonry shall comply with the provisions of TMS402/ACI 530/ASCE 5 ~~or TMS 403~~ as well as applicable requirements of this chapter.

...

SECTION 2102*A*
DEFINITIONS AND NOTATIONS

2102A.1 General. The following terms are defined in Chapter 2, *except those defined below which shall, for the purposes of this chapter, have the meanings shown herein:*

...

WALL. ...

. . . .

Hollow-unit Masonry Wall. *Type of construction made with hollow masonry units in which the units are laid and set in mortar, reinforced, and grouted.* ~~*solid. except as provided in Section 2114A.*~~

...

SECTION 2103*A*
MASONRY CONSTRUCTION MATERIALS

2103*A*.1 Masonry units. Concrete masonry units, clay or shale masonry units~~,~~ *and* glass unit masonry ~~and AAC masonry units~~ shall comply with Article 2.3 of TMS 602/ACI530.1/ASCE 6. Architectural cast stone shall conform to ASTM C 1364.

...

2103A.3 Grout. Grout shall comply with Article 2.2 of TMS 602/ACI 530.1/ASCE 6.

~~***2103A.13.1 Water.*** *Water content shall be adjusted to provide proper workability and to enable proper placement under existing field conditions, without segregation.*~~

~~***2103A.13.2 Selecting Proportions.*** *Proportions of ingredients and any additives shall be based on laboratory or field experience with the grout ingredients and the masonry units to be used. Coarse grout proportioned by weight shall contain not less than 564 pounds of cementitious material per cubic yard (335 kg / m^3).*~~

2103A.3.1 ~~***2103A.13.3***~~ ***Aggregate.*** *Coarse grout shall be used in grout spaces between wythes of 2 inches (51 mm) or more in width as determined in accordance with TMS 602 Table 7, footnote 3, and in all grouted ~~filled~~ cells of hollow unit masonry construction.*

...

~~***2103A.15 Additives and Admixtures.***~~

~~***2103A.15.1 General.*** *Additives and admixtures to mortar or grout shall not be used unless approved by the enforcement agency.*~~

~~***2103A.15.2 Antifreeze compounds.*** *Antifreeze liquids, chloride salts or other such substances shall not be used in mortar or grout.*~~

2103A.5 ~~***2103A.15.3***~~ ***Air entrainment.*** *Air-entraining substances shall not be used in ~~mortar or~~ grout unless tests are conducted to determine compliance with the requirements of this code.*

SECTION 2104A
CONSTRUCTION

2104A.1 Masonry construction. Masonry construction shall comply with the requirements of Sections 2104A.1.1 ~~and 2104A.1.2~~ *through 2104A.1.3* and with TMS 602/ACI 530.1/ASCE 6.

...

2104A.1.3 ~~***2104A.5***~~ ***Grouted Masonry.***

2104A.1.3.1 ~~***2104A.5.1***~~ ***General conditions.*** *Grouted masonry shall be constructed in such a manner that all elements of the masonry act together as a structural element. At the time of laying, all masonry units shall be free of dust and dirt. Prior to grouting, the grout space shall be clean so that all spaces to be filled with grout do not contain mortar projections greater than 1/4 inch (6.4 mm), mortar droppings and other foreign material. Grout shall be placed so that all spaces to be grouted do not contain voids.*

Grout materials and water content shall be controlled to provide adequate fluidity for placement without segregation of the constituents, and shall be mixed thoroughly. Segregation of the grout materials and damage to the masonry shall be avoided during the grouting process.

Reinforcement and embedded items shall be clean, properly positioned and securely anchored against movement prior to grouting. Bolts shall be accurately set with templates or by approved equivalent means and held in place to prevent dislocation during grouting. Reinforcement, embedded items and bolts shall be solidly embedded in grout. Anchor bolts in the face shells of hollow masonry units shall be positioned to maintain a minimum of ½ in. of grout between the bolt and the face shell.

The grouting of any section of wall shall be completed in one day with no interruptions greater than one hour.

Grout pours greater than 12 inches (300 mm) in height shall be consolidated by mechanical vibration during placement before loss of plasticity in a manner to fill the grout space, and reconsolidated by mechanical vibration to minimize voids due to water loss. Grout pours less than 12 inches in height may be puddled.

Between grout pours or where grouting has been stopped more than an hour, a horizontal construction joint shall be formed by stopping all wythes at the same elevation and with the grout stopping a minimum of 1 1/2 inches (38 mm) below a mortar joint, except at the top of the wall. Where bond beams occur, the grout pour shall be stopped a minimum of 1/2 inch (12.7 mm) below the top of the masonry.

Grout shall not be handled nor pumped utilizing aluminum equipment unless it can be demonstrated with the materials and equipment to be used that there will be no deleterious effect on the strength of the grout.

2104A.1.3.1.1 ~~2104A.5.1.1~~ Reinforced grouted masonry.

2104A.1.3.1.1.1 ~~2104A.5.1.1.1~~ General. *Reinforced grouted masonry is that form of construction made with clay or shale brick or made with solid concrete building brick in which interior joints of masonry are filled by pouring grout around reinforcement therein as the work progresses.*

2104A.1.3.1.1.1.1 ~~***2104A.5.1.1.1.1***~~ ***Low-lift grouted construction.*** *Requirements for construction shall be as follows:*

1. *All units in the two outer wythes shall be laid with full-shoved head joint and bed mortar joints. Masonry headers shall not project into the grout space.*

2. *The minimum grout space for low-lift grout masonry shall be 2 1/2 inches (64 mm). All reinforcement and wire ties shall be embedded in the grout. The thickness of the grout between masonry units and reinforcement shall be a minimum of one bar diameter.*

3. *One tier of a grouted reinforced masonry wall may be carried up 12 inches (305 mm) before grouting, but the other tier shall be laid up and grouted in lifts not to exceed one masonry unit in height. All grout shall be puddled with a mechanical vibrator or wood stick immediately after placing so as to completely fill all voids and to consolidate the grout. All vertical and horizontal steel shall be held firmly in place by a frame or suitable devices.*

4. *Toothing of masonry walls is prohibited. Racking is to be held to a minimum.*

2104A.1.3.1.1.1.2 ~~***2104A.5.1.1.1.2***~~ ***High-lift grouted construction.*** *Where high-lift grouting is used, the method shall be subject to the approval of the enforcement agency. Requirements for construction shall be as follows:*

1. *All units in the two wythes shall be laid with full head and bed mortar joints.*

2. *The two wythes shall be bonded together with wall ties. Ties shall not be less than No. 9 wire in the form of rectangles 4 inches (102 mm) wide and 2 inches (51 mm) in length less than the overall wall thickness. Kinks, water drips, or deformations shall not be permitted in the ties. One tier of the wall shall be built up not more than 16 inches (406 mm) ahead of the other tier. Ties shall be laid not to exceed 24 inches (610 mm) on center horizontally and 16 inches (406 mm) on center*

vertically for running bond, and not more than 24 inches (610 mm) on center horizontally and 12 inches (305 mm) on center vertically for stack bond.

3. *Cleanouts shall be provided for each pour by leaving out every other unit in the bottom tier of the section being poured or by cleanout openings in the foundation. The foundation or other horizontal construction joints shall be cleaned of all loose material and mortar droppings before each pour. The cleanouts shall be sealed after inspection and before grouting.*

4. *The grout space in high-lift grouted masonry shall be a minimum of 3 1/2 inches (89 mm). All reinforcement and wire ties shall be embedded in the grout. The thickness of the grout between masonry units and reinforcement shall be a minimum of one bar diameter.*

5. *Vertical grout barriers or dams of solid masonry shall be built across the grout space the entire height of the wall to control the flow of the grout horizontally. Grout barriers shall not more than 30 feet (9144 mm) apart.*

6. *An approved admixture of a type that reduces early water loss and produces an expansive action shall be used in high-lift grout.*

7. *Grouting shall be done in a continuous pour in lifts not exceeding 4 feet (1219 mm).Grout shall be consolidated by mechanical vibration only, and shall be reconsolidated after excess moisture has been absorbed, but before plasticity is lost. The grouting of any section of a wall between control barriers shall be completed in one day, with no interruptions greater than one hour.*

2104A.1.3.1.2 ~~***2104A.5.1.2***~~ ***Reinforced hollow-unit masonry.***

2104A.1.3.1.2.1 ~~***2104A.5.1.2.1***~~ ***General.*** *Reinforced hollow-unit masonry is that type of construction made with hollow-masonry units in which cells are continuously filled with grout, and in which reinforcement is embedded. All cells shall be solidly filled with grout in reinforced hollow-unit masonry.* ~~*, except as provided in Section 2114A.1.*~~

Exception: [redacted] *Reinforced hollow-unit masonry laid in running bond used for freestanding site walls ~~fences and~~ or interior nonbearing non-shear wall partitions may be ~~of hollow-unit masonry construction~~ grouted only in cells containing vertical and horizontal reinforcement.*

Construction shall be one of the two following methods: The low-lift method where the maximum height of construction laid before grouting is 4 feet (1220 mm), or the high-lift method where the full height of construction between horizontal cold joints is grouted in one operation. General requirements for construction shall be as follows:

1. *Bond shall be provided by lapping units in successive vertical courses. Where stack bond is used in reinforced hollow-unit masonry, the open-end type of unit shall be used with vertical reinforcement spaced a maximum of 16 inches (406 mm) on center.*

2. *Vertical cells to be filled shall have vertical alignment sufficient to maintain a clear grout space dimension ~~unobstructed, continuous vertical cell measuring~~ of not less than 2 inches by 3 inches (51 mm by 76 mm), except the minimum cell dimension for high-lift grout shall be 3 inches (76 mm), as determined in accordance with TMS 602 Table 7, footnote 3.*

3. *Grout shall be a workable mix suitable for placing without segregation and shall be thoroughly mixed. Grout shall be placed by pumping or an approved alternate method and shall be placed before initial set or hardening occurs. Grout shall be consolidated by mechanical vibration during placing and reconsolidated after excess moisture has been absorbed, but before workability is lost.*

4. *All reinforcement and wire ties shall be embedded in the grout. The space between masonry unit surfaces and reinforcement shall be a minimum of one bar diameter.*

5. *Horizontal reinforcement shall be placed in bond beam units with a minimum grout cover of 1 inch (25 mm) above steel for each grout pour. The depth of the bond beam channel below the top of the unit shall be a minimum of 1 1/2 inches (38 mm) and the width shall be 3 inches (76 mm) minimum.*

2104A.1.3.1.2.2 ~~*2104A.5.1.2.2*~~ ***Low-lift grouted construction.*** *Units shall be laid a maximum of 4 feet (1220 mm) before grouting. Grouting shall follow each 4 feet (1220 mm) of construction laid and shall be consolidated so as to completely fill all voids and embed all reinforcing steel. Horizontal reinforcement shall be fully embedded in grout in an uninterrupted pour.*

2104A.1.3.1.2.3 ~~*2104A.5.1.2.3*~~ ***High-lift grouted construction.*** *Where high-lift grouting is used, the method shall be approved by the enforcement agency. Cleanout openings shall be provided in every cell at the bottom of each pour of grout. Alternatively, if the course at the bottom of the pour is constructed entirely of inverted double open-end bond beam units, cleanout openings need only be provided for access to every reinforced cell at the bottom of each pour of grout. The cleanouts shall be sealed before grouting. An approved admixture that reduces early water loss and produces an expansive action shall be used in the grout.*

SECTION 2105A
QUALITY ASSURANCE

...

2105A.2 Compressive Strength, f'_m. *The specified compressive strength, f'_m, assumed in design shall be 2,000 psi (13.79MPa)* ~~*1,500 psi (10.34 MPa)*~~ *for all masonry construction using materials and details of construction required herein. Testing of the constructed masonry shall be provided in accordance with Section 2105A.4* ~~*2105A.5 [DSA-SS]*~~*.*

Exception: ~~*[DSA-SS]*~~ *Subject to the approval of the enforcement agency, higher values of f'_m may be used in the design of reinforced grouted masonry and reinforced hollow-unit masonry. The approval shall be based on prism test results submitted by the architect or engineer which demonstrate the ability of the proposed construction to meet prescribed performance criteria for strength and stiffness. The design shall take into account the mortar joint depth. In no case shall the f'_m assumed in design exceed 3,000 psi (20.7 MPa).*
Where an f'_m greater than 2,000 psi (13.79 MPa) ~~*1,500 psi (10.34 MPa)*~~ *is approved, the architect or structural engineer shall establish a method of quality control of the masonry construction acceptable to the enforcement agency which shall be described in the contract specifications. Compliance with the requirements for the specified* ~~*compressive*~~ *strength of constructed masonry* ~~*f'_m*~~ *shall be provided using prism test method* ~~*in accordance with Section 2105A.2.2.1 or 2105A.2.2.2*~~ *and core shear testing in accordance with Section 2105A.4. Substantiation for the specified compressive strength*

prior to the start of construction shall be obtained by using prism test method ~~in accordance with Section 2105A.2.2.2.2.~~ and Section 2105A.3. ~~Testing of the constructed masonry shall be provided in accordance with Section 2105A.5.~~

2105A.3 ~~2105A.2.2.1.4~~ Mortar and grout tests. *These tests are to establish whether the masonry components meet the specified component strengths.*

At the beginning of all masonry work, at least one test sample of the mortar ~~and grout~~ shall be taken on three successive working days and at least at one-week intervals thereafter. Samples of grout shall be taken for each mix design, each day grout is placed, and not less than every 5,000 square feet of masonry wall area. They shall meet the minimum strength requirement given in ASTM C270 Table 1 and ASTM C476/TMS 602 Section 2.2 ~~Sections 2103A.9 and 2103A.13~~ for mortar and grout respectively. Additional samples shall be taken whenever any change in materials or job conditions occur, as determined by the building official. ~~or whenever in the judgment of the architect, structural engineer or the enforcement agency such tests are necessary to determine the quality of the material.~~ When the prism test method ~~of Section 2105A.2.2.2~~ is used during construction, the tests in this section are not required.

Test specimens for mortar and grout shall be made as set forth in ASTM C 1586 and ASTM C 1019.

Exceptions:

1. For non-bearing non-shear masonry walls not exceeding total wall height of 12' above wall base, mortar test shall be permitted to be limited to those at the beginning of masonry work for each mix design.

2. [DSA-SS] Mortar sampling and testing shall be as follows: At the beginning of all masonry work, mortar test samples shall be taken on three successive working days and at least at one-week intervals thereafter. Where mortar is based on a proportion specification, mortar shall be sampled and tested during construction in accordance with ASTM C780 Annex 4 and 5 to verify the proportions specified in ASTM C270, Table 2. Where mortar is based on a property specification, mortar shall be laboratory prepared and tested prior to construction in accordance with ASTM C780 to verify the properties specified in ASTM C270, Table 1 and field sampled and tested during construction in accordance with ASTM C780 to verify the proportions with the laboratory tests. Mortar sampling and testing is not required for approved preblended mortars in conformance with ASTM C270.

2105A.4 Masonry core testing. *~~[OSHPD 1 & 4]~~ Not less than two cores shall be taken from each building for each 5,000 square feet (465 m^2) ~~of the greater~~ of the masonry wall area ~~or the floor area~~ or fraction thereof. ~~The architect or structural engineer in responsible charge of the project or his/her representative or the inspector of record shall select the areas for sampling.~~ The ~~inspector of record~~ approved agency shall perform or observe the coring of the masonry walls and sample locations shall be subject to approval of the registered design professional.*

Core~~s~~ samples shall comply with the following:

1. *Cored no sooner than 7 days after grouting of the selected area;*
2. *~~b~~ Be a minimum of 3-3/4" in nominal diameter; and*
3. *Sampled ~~shall be taken~~ in such a manner as to exclude any masonry unit webs, mortar joint, or ~~and~~ reinforcing steel. If all cells contain reinforcement, alternate core locations or means to detect void or delamination shall be selected by the registered design professional and approved by the building official.*

Visual examination of all cores shall be made by an approved agency ~~a laboratory acceptable to the building official~~ and the condition of the cores reported as required by the California Administrative Code. ~~The s~~Shear test ~~shall test~~ both joints between the grout core and the outside wythes or face shell of the masonry ~~One half of the number of cores taken shall be tested in shear~~ 28 days after grouting of the sample area using a shear test apparatus acceptable to the enforcement agency. ~~Shear testing apparatus shall be of a design approved by the enforcement agency.~~ Core samples shall not be soaked before testing. Core samples to be tested shall be stored in sealed plastic bags or non-absorbent containers immediately after coring and for at least 5 days prior to testing. The average unit shear value

for each pair of cores (4 shear tests) from each 5,000 square feet of wall area (or less) on the cross section of ~~the~~ core shall not be less than 2.5 $\sqrt{f'_m}$ psi.

All cores shall be submitted to an approved agency ~~the laboratory, acceptable to the building official,~~ for examination, ~~regardless of whether~~ even where the core specimens failed during the cutting operation. The approved agency ~~laboratory~~ shall report the location where each core was taken, the findings of their visual examination of each core, identify which cores were selected for shear testing, and the results of the shear tests.

Exceptions:

1. *Core sampling and testing is not required for non-bearing non-shear masonry walls, not exceeding total wall height of 12' above wall base, built with single-wythe hollow unit concrete masonry that attaches opposite face shells using webs cast as single unit, when designed using an f'_m not exceeding 2,000 psi (13.79 MPa).*
2. *An infrared thermographic survey or other nondestructive test procedures, shall be permitted to be approved as an alternative system to detect voids or delamination in grouted masonry in-lieu of core sampling and testing.*

~~***2105A.5 Masonry core testing. [DSA-SS]*** *Not less than two cores shall be taken from each building for each 5,000 square feet (465 m2) of the greater of the masonry wall area or the floor area or fraction thereof. The architect or structural engineer in responsible charge of the project or his/her representative or the inspector of record shall select the areas for sampling. Cores shall be a minimum of 33/4 inches (76mm) in diameter and shall be taken in such a manner as to exclude masonry unit webs and reinforcing steel. If vertical reinforcing steel is placed such that cores will include reinforcing steel, core testing may be waived by the design professional in responsible charge, as approved by the enforcement agency. The inspector of record shall observe the coring of the masonry walls.~~

~~*Visual examination of all cores shall be made by a laboratory acceptable to the building official and the condition of the cores reported as required by the California Administrative Code. All cores taken shall be tested in shear. The shear test shall test both joints between the grout core and the outside wythes or face shell of the masonry. Shear testing apparatus shall be of a design approved by the enforcement agency. Core samples shall not be soaked before testing. The average unit shear on the cross section of all the cores shall not be less than 2.5 $\sqrt{f'm}$ psi.*~~

~~*All cores shall be submitted to the laboratory, acceptable to the building official, for examination, regardless of whether the outside wythe or face shells separated during the cutting operation. The*~~

~~*laboratory shall report the location where each core was taken, the findings of their visual examination of each core, and the results of the shear tests.*~~

SECTION 2106*A*
SEISMIC DESIGN

2106*A*.1 Seismic design requirements for masonry. Masonry structures and components shall comply with the requirements in Chapter 7 of TMS 402/ACI 530/ASCE 5 depending on the structure's *Seismic Design Category.*

2106A.1.1 Modifications to TMS 402 / ACI 530 / ASCE 5. *Modify TMS 402 / ACI 530 / ASCE 5 Section 7.4.4 ~~1.18~~ as follows:*

1. - Minimum reinforcement requirements for Masonry Walls *The total area of reinforcement in reinforced masonry walls shall not be less than 0.003 times the sectional area of the wall. Neither the horizontal nor the vertical reinforcement shall be less than one third of the total. Horizontal and vertical reinforcement shall be spaced at not more than 24 inches (610 mm) center to center. The minimum reinforcing shall be No. 4, except that No. 3 bars may be used for ties and stirrups. Vertical wall reinforcement shall have dowels of equal size and equal matched spacing in all footings. Reinforcement shall be continuous around wall corners and through intersections. Only reinforcement which is continuous in the wall shall be considered in computing the minimum area of reinforcement. Reinforcement with splices conforming to TMS 402 / ACI 530 / ASCE 5 ~~as modified by Section 2107A and 2108A~~ shall be considered as continuous reinforcement.*

Horizontal reinforcing ~~ement~~ bars in bond beams shall be provided in the top of footings, at the top of wall openings, at roof and floor levels, and at the top of parapet walls. For walls 12 inches (nominal) (305 mm) or more in thickness, horizontal and vertical reinforcement shall be equally divided into two layers, except where designed as retaining walls. Where reinforcement is added above the minimum requirements, such additional reinforcement need not be so divided.

In bearing walls of every type of reinforced masonry, there shall be trim reinforcement of not less than one No. 5 bar or two No. 4 bars on all sides of, and adjacent to, every opening which exceeds 16 inches (406 mm) in either direction, and such bars shall extend not less than 48 diameters, but in no case less than 24 inches (610 mm) beyond the corners of the opening. The

bars required by this paragraph shall be in addition to the minimum reinforcement elsewhere required.

When the reinforcement in bearing walls is designed, placed and anchored in position as for columns, the allowable stresses shall be as for columns.

Joint reinforcement shall not be used as principal reinforcement in masonry. ~~designed by the strength design method.~~

2. - Minimum reinforcement for masonry columns. *The spacing of column ties shall be as follows: not greater than 8 bar diameters, 24 tie diameters, or one half the least dimension of the column for the full column height. Ties shall be at least 3/8" in diameter and shall be embedded in grout. Top tie shall be within 2 inches (51 mm) of the top of the column or of the bottom of the horizontal bar in the supported beam.*

3. Lateral support. *Lateral support of masonry may be provided by cross walls, columns, pilasters, counterforts or buttresses where spanning horizontally or by floors, beams, girts or roofs where spanning vertically. Where walls are supported laterally by vertical elements, the stiffness of each vertical element shall exceed that of the tributary area of the wall.*

4. Anchor Bolts. *Bent bar anchor bolts shall not be allowed. The maximum size anchor shall be 1/2-inch (13 mm) diameter for 6-inch (152 mm) nominal masonry, 3/4-inch (19 mm) diameter for 8-inch (203 mm) nominal masonry, 7/8-inch (22 mm) diameter for 10-inch (254 mm) nominal masonry, and 1-inch (25mm) diameter for 12-inch (304.8 mm) nominal masonry.*

SECTION 2107A
ALLOWABLE STRESS DESIGN

2107A.1 General. The design of masonry structures using *allowable stress design* shall comply with Section 2106*A* and the requirements of Chapters 1 through 8 of TMS 402/ACI 530/ASCE 5 except as modified by Sections 2107*A*.2 through ~~2107A.4~~ *2107A.6*.

...

2107*A*.2 TMS 402/ACI 530/ASCE 5, Section 8.1.6.7.1.1, lap splices. In lieu of Section 8.1.6.7.1.1, it shall be permitted to design lap splices in accordance with Section 2107*A*.2.1.

2107*A*.2.1 Lap splices. The minimum length of lap splices for reinforcing bars in tension or compression, l_d, shall be

$l_d=0.002d_bf_s$ (Equation 21A-1)

For SI: $l_d=0.29d_bf_s$

but not less than 12 inches (305) mm). In no case shall the length of the lapped splice be less than 40 bar diameters, *and need not be greater than 72 bar diameters.*

where:

...

2107A.5 Modify TMS 402 / ACI 530/ASCE 5 by adding Section 8.1.7 ~~2.1.8~~ as follows:

8.1.7 ~~2.1.8~~ - Walls and Piers.

Thickness of Walls. *For thickness limitations of walls as specified in this chapter, nominal thickness shall be used. Stresses shall be determined on the basis of the net thickness of the masonry, with consideration for reduction, such as raked joints.*

The thickness of masonry walls shall be designed so that allowable maximum stresses specified in this chapter are not exceeded. Also, no masonry wall shall exceed the height or length-to-thickness ratio or the minimum thickness as specified in this chapter and as set forth in Table 2107A.5. ~~below.~~

Piers. *Every pier or wall section which width is less than three times its thickness shall be designed and constructed as required for columns if such pier is a structural member. Every pier or wall section which width is between three and five times its thickness or less than one half the height of adjacent openings shall have all horizontal steel in the form of ties except that in walls 12 inches (305 mm) or less in thickness such steel may be in the form of hair-pins.*

TABLE 2107A.5 - MINIMUM THICKNESS OF MASONRY WALLS[1, 2]

TYPE OF MASONRY	*MAXIMUM RATIO UNSUPPORTED HEIGHT OR LENGTH TO THICKNESS*[2,3]	*NOMINAL MINIMUM THICKNESS (inches)*
BEARING OR SHEAR WALLS:		
1. Stone masonry	*14*	*16*
2. Reinforced grouted masonry	*25*	*6*
3. Reinforced hollow-unit masonry	*25*	*6*
NONBEARING WALLS:		
4. Exterior reinforced walls	*30*	*6*
5. Interior partitions reinforced	*36*	*4*

[1]*For walls of varying thickness, use the least thickness when determining the height or length to thickness ratio.*

[2]*In determining the height or length-to-thickness ratio of a cantilevered wall, the dimension to be used shall be twice the dimension of the end of the wall from the lateral support.*

[3]*Cantilevered walls not part of a building and not carrying applied vertical loads need not meet these minimum requirements but their design must comply with stress and overturning requirements.*

2107A.6 [redacted]

SECTION 2108A
STRENGTH DESIGN OF MASONRY

2108.1 General. The design of masonry structures using strength design shall comply with Section 2106 and the requirements of Chapters 1 through 7 and Chapter 9 of TMS 402/ACI 530/ASCE 5, except as modified by Sections 2108.2 through 2108.3.

~~**Exception:** AAC masonry shall comply with the requirements of Chapters 1 and 8 of TMS 402/ACI 530/ASCE 5.~~

...

SECTION 2109A
EMPIRICAL DESIGN OF MASONRY

Not permitted by DSA.

~~(Existing amendment deleting Section 2109 of IBC is retained and deleted Section 2109 is not shown here for clarity)~~

SECTION 2110A
GLASS UNIT MASONRY

2110A.1 General. Glass unit masonry construction shall comply with Chapter 13 of TMS402/ACI 530/ASCE 5 and this section.

Masonry ~~of~~ glass blocks walls or panels shall be designed for seismic forces. ~~permitted in non-load-bearing exterior or interior walls and shall conform to the requirements of Section 2115A.~~ Stresses in glass block shall not be utilized. ~~Glass block may be solid or hollow and may contain inserts.~~

...

~~SECTION 2114A~~
~~NONBEARING WALLS~~

~~***2114A.1 General.*** *All nonbearing masonry walls shall be reinforced as specified in Section 2106A.1.1. Fences and interior nonbearing nonshear walls may be of hollow-unit masonry construction grouted in cells containing vertical and horizontal reinforcement. Nonbearing walls may be used to carry a superimposed load of not more than 200 pounds per linear foot (2.92 kN/m).*~~

~~***1. Thickness.*** *Every nonbearing masonry wall shall be so constructed and have a sufficient thickness to withstand all vertical loads and horizontal loads, but in no case shall the thickness of such walls be less than the values set forth in Table 2107A.5.*~~
~~*Plaster shall not be considered as contributing to the thickness of a wall in computing the height-to-thickness ratio.*~~

~~**2. Anchorage.** All nonbearing walls shall be anchored as required by Sections 1604A.8.2 and ASCE 7 Chapter 13. Suspended ceilings or other nonstructural elements shall not be used to provide anchorage for masonry walls.~~

~~SECTION 2115A~~
~~MASONRY SCREEN WALLS~~

~~**2115A.1 General.** Masonry units may be used in nonbearing decorative screen walls. Units may be laid up in panels with units on edge with the open pattern of the unit exposed in the completed wall.~~

~~**1. Horizontal Forces.** The panels shall be capable of spanning between supports to resist the horizontal forces specified in Chapter 16A. Wind loads shall be based on gross projected area of the block.~~

~~**2. Mortar Joints.** Horizontal and vertical joints shall not be less than 1/4 inch (6 mm) thick. All joints shall be completely filled with mortar and shall be "shoved joint" work. The units of a panel shall be so arranged that either the horizontal or the vertical joint containing reinforcing is continuous without offset. This continuous joint shall be reinforced with a minimum of 0.03 square inch (19 mm^2) of reinforcing steel and maximum spacing of 16 inches on center. Reinforcement may be embedded in mortar.~~

~~**3. Reinforcement.** Joint reinforcement may be composed of two wires made with welded ladder or trussed wire cross ties. In calculating the resisting capacity of the system, compression and tension in the spaced wires may be utilized. Ladder wire reinforcement shall not be spliced and shall be the widest that the mortar joint will accommodate, allowing 1/2 inch (13 mm) of mortar cover.~~

~~**4. Size of Panels.** The maximum size of panels shall be 144 square feet (13.4 m^2), with the maximum dimension in either direction of 15 feet (4572 mm). The specified thickness of the units for exterior applications shall not be less than 3 7/8 inches.~~

~~**5. Panel Support.** Each panel shall be supported on all edges by a structural member of concrete, masonry or steel. Supports at the top and ends of the panel shall be by means of confinement of the masonry by at least 1 inch (25 mm) into and between the flanges of a steel channel. The space between the end of the panel and the web of the channel shall be filled with resilient material. The use of equivalent configuration in other steel section or in masonry or concrete is acceptable.~~

[All existing amendments, except where section is deleted in the model code, that are not revised above shall continue without any change]

Notation for [DSA-SS]
Authority: Education Code § 17310 and 81142, and H&S Code §16022.
Reference: Education Code §§ 17280 through 17317, and 81130 through 81147, and Health and Safety Code §§16000 through 16023.

CHAPTER 22

STEEL

Adopt and/or codify chapter as amended below:

PROPOSED ADOPTION	DSA-SS	DSA-SS/CC	Comments
Adopt entire chapter without amendments			
Adopt entire chapter with amendments listed below	-	X	
Adopt only those sections listed below			
2201.1.1		X	
2201.1.2		X	
2201.1.3		X	
2201.1.4		X	
2212		X	
~~*2212.1*~~		~~X~~	
~~*2212.1.1*~~		~~X~~	
~~*2212.2*~~		~~X~~	
~~*2212.3*~~		~~X~~	
~~*2212.4*~~		~~X~~	
~~*2212.5*~~		~~X~~	
~~*2212.6*~~		~~X~~	

[All existing California amendments that are not revised below shall continue without change]

SECTION 2201

GENERAL

2201.1 Scope. *The provisions of this chapter govern the quality, design, fabrication and erection of steel used structurally in buildings or structures.*

2201.1.1 Application. [DSA-SS/CC] *The scope of application of Chapter 22 is as follows:*

Community college buildings regulated by the Division of the State Architect-Structural Safety/Community Colleges (DSA-SS/CC), as listed in Section 1.9.2.2.

2201.1.2 Identification of amendments. [DSA-SS/CC]

Division of the State Architect-Structural Safety/Community Colleges amendments appear in this chapter preceded with the appropriate acronym, as follows:

[DSA-SS/CC] *- For community college buildings listed in Section 1.9.2.2*

2201.1.3 Reference to other chapters. [DSA-SS/CC] *Where reference within this chapter is made to sections in Chapter 17 the provisions in Chapter 17A, shall apply instead.*

2201.1.4 Amendments. [DSA-SS/CC] *See Section 2212 for additional requirements.*

...

SECTION 2212

ADDITIONAL REQUIREMENTS FOR COMMUNITY COLLEGES [DSA-SS/CC]

2212.1 Connections.

2212.1.1 Column base plate. *When shear and/or tensile forces are intended to be transferred between column base plates and anchor bolts, provision shall be made in the design to eliminate the effects of oversized holes permitted in base plates by AISC 360 by use of shear lugs and/or welded shear transfer plates or other means acceptable to the enforcement agency, when the oversized holes are larger than the anchor bolt by more than 1/8 inch (3.2 mm). When welded shear transfer plates and shear lugs or other means acceptable to the enforcement agency are not used, the anchor bolts shall be checked for the induced bending stresses in combination with the shear stresses.*

2212.2 Modifications to AISC 341.

2212.2.1 Section A4. *Replace Section A4.1 item (3) as follows:*

(3) Locations and dimensions of protected zones, including provision by the owner or owner's' designated representative for construction to permanently mark and maintain the protection.

2212.2.2 ~~***2212.2.1***~~ ***Section D1.*** *Add Section D1.6 as follows:*

6. Diaphragm bracing systems. *The required strength of diagonal bracing members used as the diaphragm shall be determined from either of the following:*

(1) The load effect resulting from the diaphragm analysis per the applicable building code provided the members satisfy all of the following requirements:

1. Diagonal bracing members comply with Section D1.1 for moderately ductile members.

2. Each diagonal bracing member resists no more than 30 percent of the diaphragm shear at each line of resistance.

3. Diagonal bracing members shall not support gravity loads other than self-weight.

4. The slenderness ratio (KL/r) of diagonal bracing members shall not exceed $4\sqrt{E/Fy}$, except tension-only bracing.

(2) The load effect required for collectors using the load combinations stipulated in the applicable building code.

2212.2.3 ~~***2212.2.2***~~ ***Section D2.*** *Modify Section D2.6c(b)(ii) as follows:*

(ii) the moment calculated using the load combinations of the applicable building code, including the amplified seismic load, provided the connection or other mechanism within the column base is designed to have the ductility necessary to accommodate the column base rotation resulting from the design story drift.

2212.2.4 ~~***2212.2.3***~~ ***Section D2.*** *Add Section D2.9 as follows:*

9. Diaphragm bracing systems. *The required strength of the connections of diagonal bracing members used as the diaphragm shall be the load effect required for collectors using the load combinations stipulated in the applicable building code.*

2212.2.5 ~~***2212.2.4***~~ ***Section F2.*** *Modify Section F2.3 Exception (2)(a) as follows:*

(a) The maximum of the forces determined using load combination stipulated by the applicable building code including the amplified seismic load, applied to the building frame model in which all compression braces have been removed and those determined with no compression braces removed per D1.4a(2).

2212.2.6 Section F1. *Add Section F1.4c as follows:*

4c. Multi-tiered Braced Frames: *Braced-frames configured with two or more tiers of bracing between diaphragm levels or locations of out-of-plane support shall comply with the additional requirements of section F2.4e.*

2212.2.7 ~~***2212.2.5***~~ ***Section F2.*** *Modify Section F2.4a by adding the following:*

Where each framing bay on a line of resistance does not have opposing diagonal braces within the same column bay, then the collector forces along that line shall be designed considering the redistribution of seismic forces to other bays as a result of the post buckled redistribution of loads using the analysis requirements of Section F2.3. The collector shall not be designed for a load less than that stipulated by the applicable building code:

The required strength of the collector need not exceed the forces determined using load combination stipulated by the applicable building code including the amplified seismic load, applied to the building model in which all compression braces have been removed.

2212.2.8 Section F2. *Add Section F2.4e as follows:*

4c. Multi-tiered Braced Frames: *Braced-frames configured with two or more tiers of bracing between diaphragm levels or locations of out-of-plane support shall comply with the additional requirements of this section:*

(1) Braces shall be used in symmetrical pairs at every tier level.

(2) Horizontal beams at intermediate tier levels for V- and inverted V-brace configurations shall have out-of-plane strength, stiffness, and beam-to-column connections adequate to resist torsional moments arising from brace buckling when braces are designed to buckle out-of-plane.

(3) Columns shall be restrained against rotation about their longitudinal axis at each intermediate tier level and shall resist out-of-plane bending moments due to second-order effects, geometric imperfections, and out-of-plane brace buckling.

2212.3 Seismic requirements for composite structural steel and concrete construction. *In addition to the requirements of Section 2206.2, steel and concrete composite special moment frame with the approved moment connections in accordance with AISC 358 Chapter 10 shall be permitted provided:*

1. Beams are provided with reduced beam sections (RBS),

~~*2. Columns shall be hollow structural sections (HSS) and completely filled with structural concrete having unit weight not less than 110 pounds per cubic foot (17 kN/ m3). Concrete shall have 28-day compressive strength not less than 4,000 psi (28 MPa).*~~

2. ~~3.~~Web extension to beam web two sided fillet weld welds are sized to develop expected strength of the beam web and shall not be less than a ¼ inch fillet weld, and

~~*4. The high strength bolt design shall consider interaction between shear and tension as required by AISC 360, and*~~

3. ~~5.~~ The built-up box column wall thickness shall not be less than 1.25" and ~~T~~ the HSS column wall thickness shall not be less than 1/2 inch.

2212.4 Steel joists.

2212.4.1 Design approval. *Joist and joist girder design calculations and profiles with member sizes and connection details, and joist placement plans shall be provided to the enforcement agency and approved prior to joist fabrication, in accordance with Title 24, Part 1. Joist and joist girder design calculations and profiles with member sizes and connection details shall bear the signature and stamp or seal of the registered engineer or licensed architect responsible for the joist design. Alterations to the approved joist and joist girder design calculations and profiles with member sizes and connection details, or to fabricated joists are subject to the approval of the enforcement agency.*

2212.4.2 Joist chord bracing. *The chords of all joists shall be laterally supported at all points where the chords change direction.*

2212.5 Cold-formed steel light-frame construction.

2212.5.1 Trusses.

2212.5.1.1 Analysis submittals. *Complete engineering analysis and truss design drawings shall accompany the construction documents submitted to the enforcement agency for approval. When load testing is required the test report shall be submitted with the truss design drawings and engineering analysis to the enforcement agency.*

2212.5.1.2 Deferred submittals. *AISI S214 Section B4.2 shall not be deleted.*

2212.5.2 Anchorage for shear. *Cold formed steel stud foundation plates or sills shall be bolted or fastened to the foundation or foundation wall in accordance with Section 2304.3.4, Item 2.*

2212.5.3 Limitations on shear wall assemblies. *Shear wall assemblies in accordance with ~~per~~ Section C2.2.3 of AISI- S213 are not permitted within the seismic force-resisting system of buildings or structures assigned to Occupancy Category II, III, IV., or buildings designed to be relocatable.*

2212.6 Testing.

2212.6.1 Tests of high-strength bolts, nuts and washers. *High-strength bolts, nuts and washers shall be sampled and tested by an approved independent testing laboratory for conformance with the requirements of Section 2205.*

2212.6.2 Tests of end-welded studs. *End-welded studs shall be sampled and tested in accordance with ~~per~~ the requirements of the AWS D1.1.*

Notation for [DSA-SS/CC]
Authority: Education Code § 81053.
Reference: Education Code §§ 81052, 81053, and 81130 through 81147.

CHAPTER 22A

STEEL

Adopt and/or codify chapter as amended below:

PROPOSED ADOPTION	DSA-SS	DSA-SS/CC	Comments
Adopt entire chapter without amendments			
Adopt entire chapter as amended	X	-	
Adopt only those sections listed below			

[All existing amendments that are not revised below shall continue without any change]

...

SECTION 2201*A*

GENERAL

2201*A*.1 Scope. The provisions of this chapter govern the quality, design, fabrication and erection of steel construction.

2201A.1.1 Application. *The scope of application of Chapter 22A is as follows:*

1. *Structures regulated by the Division of the State Architect-Structural Safety (DSA-SS), which include those applications listed in Section 1.9.2.1. These applications include public elementary and secondary schools, community colleges and state- owned or state-leased essential services buildings.*
2. [Reserved for OSHPD]

Exception: [Reserved for OSHPD]

2201A.1.2 Identification of amendments. *DSA-SS adopts this chapter and all amendments.*

Exception: *Amendments adopted by only one agency appear in this chapter preceded with the appropriate acronym of the adopting agency, as follows:*

1. *Division of the State Architect-Structural Safety:* ***[DSA-SS]*** *For applications listed in Section 1.9.2.1.*

2. [Reserved for OSHPD]

SECTION 2202A
DEFINITIONS

2202A.1 Definitions. The following terms *are defined in Chapter 2.*

...

SECTION 2204*A*
CONNECTIONS

2204*A*.1 Welding. The details of design, workmanship and technique for welding and qualification of welding personnel shall be in accordance with the specifications listed in Sections 2205*A*, 2206*A*, 2207*A*, 2208*A*, 2210*A* and 2211*A*. For *Special inspection* of welding, see Section 1705*A*.2.

...

2204A.4 ~~***2204A.2.2***~~ ***Column base plate.*** *When shear and / or tensile forces are intended to be transferred between column base plates and anchor bolts, provision shall be made in the design to eliminate the effects of oversized holes permitted in base plates by AISC 360 by use of shear lugs and / or welded shear transfer plates or other means acceptable to the enforcement agency, when the oversized holes are larger than the anchor bolt by more than 1/8 inch (3.2 mm). When welded shear transfer plates and shear lugs or other means acceptable to the enforcement agency are not used, the anchor bolts shall be checked for the induced bending stresses in combination with the shear stresses.*

SECTION 2205A
STRUCTURAL STEEL

2205*A*.1 General. The design, fabrication and erection of structural steel elements in buildings, structures and portions thereof shall be in accordance with AISC 360.

Exception: [Reserved for OSHPD]

2205*A*.2 Seismic Design. Where required, the seismic design, fabrication and erection of buildings, structures and portions thereof shall be in accordance with Section 2205A.2.1 or 2205A.2.2.
~~**2205*A*.2.1 Seismic Design Category A, B or C.** *Not permittedby DSA-SS.*~~

2205*A*.2.1 Structural steel seismic force-resisting system. The design, detailing, fabrication and erection of structural steel seismic force-resisting systems shall be in accordance with the provisions of Section 2205A.2.1.1 or 2205A.2.1.2, as applicable.

2205*A*.2.1.1 Seismic Design Category B or C. *Not permitted by DSA.* ~~Structures assigned to Seismic Design Category B or C shall be of any construction permitted in Section 2205. Where a response modification coefficient, R, in accordance with ASCE 7, Table 12.2-1 is used for the design of structural steel structures assigned to Seismic Design Category B or C, the structures shall be designed and detailed in accordance with the requirements of AISC 341.~~

~~**Exception:** The response modification coefficient, R, designated for "Steel systems not specifically detailed for seismic resistance, excluding cantilever column systems" in ASCE 7, Table 12.2-1 shall be permitted for systems designed and detailed in accordance with AISC 360, and need not be designed and detailed in accordance with AISC 341.~~

2205*A*.2.1.2 Seismic Design Category D, E or F. Structures assigned to *Seismic Design Category* D, E or F shall be designed and detailed in accordance with AISC 341. ~~, except as permitted in ASCE 7, Table 15.4-1.~~

2205*A*.2.2 Structural steel elements. The design, detailing, fabrication and erection of structural steel elements in seismic force-resisting system other than those covered in Section 2205A.2.1, including struts, collectors, chords and foundation elements shall be in accordance with AISC 341.~~, where either of following applies:~~

~~1. The structure is assigned to seismic design category D, E or F, except as permitted in ASCE 7, Table 15.4-1.~~

~~2. A response modification coefficient, R, greater than 3 in accordance with ASCE 7, Table 12.2-1, is used for the design of structure assigned to seismic design category B or C.~~

2205A.3 Modifications to AISC 341. [DSA-SS]

2205A.3.1 Section A4. *Replace Section A4.1 item (3) as follows:*

(3) Locations and dimensions of protected zones, including provision by the owner or owner's' designated representative for construction to permanently mark and maintain the protection.

2205A.3.2 ~~***2205A.3.1***~~ ***Section D1.*** *Add Section D1.6 as follows:*

6. Diaphragm bracing systems. *The required strength of diagonal bracing members used as the diaphragm shall be determined from either of the following:*

(1) The load effect resulting from the diaphragm analysis per the applicable building code provided the members satisfy all of the following requirements:

1. Diagonal bracing members comply with Section D1.1 for moderately ductile members.

2. Each diagonal bracing member resists no more than 30 percent of the diaphragm shear at each line of resistance.

3. Diagonal bracing members shall not support gravity loads other than self-weight.

4. The slenderness ratio (KL/r) of diagonal bracing members shall not exceed $4\sqrt{E/Fy}$*, except tension-only bracing.*

(2) The load effect required for collectors using the load combinations stipulated in the applicable building code.

2205A.3.3 ~~***2205A.3.2***~~ ***Section D2.*** *Modify Section D2.6c(b)(ii) as follows:*

(ii) the moment calculated using the load combinations of the applicable building code, including the amplified seismic load, provided the connection or other mechanism within the column base is designed to have the ductility necessary to accommodate the column base rotation resulting from the design story drift.

2205A.3.4 ~~***2205A.3.3***~~ ***Section D2.*** *Add Section D2.9 as follows:*

9. Diaphragm bracing systems. *The required strength of the connections of diagonal bracing members used as the diaphragm shall be the load effect required for collectors using the load combinations stipulated in the applicable building code.*

2205A.3.5 Section F1. *Add Section F1.4c as follows:*

4c. Multi-tiered Braced Frames: *Braced-frames configured with two or more tiers of bracing between diaphragm levels or locations of out-of-plane support shall comply with the additional requirements of section F2.4e.*

2205A.3.6 ~~***2205A.3.4***~~ ***Section F2.*** *Modify Section F2.3 Exception (2)(a) as follows:*

(a) The maximum of the forces determined using load combination stipulated by the applicable building code including the amplified seismic load, applied to the building frame model in which all compression braces have been removed and those determined with no compression braces removed per D1.4a(2).

2205A.3.7 ~~***2205A.3.5***~~ ***Section F2.*** *Modify Section F2.4a by adding the following:*

Where each framing bay on a line of resistance does not have opposing diagonal braces within the same column bay, then the collector forces along that line shall be designed considering the redistribution of seismic forces to other bays as a result of the post-buckled redistribution of loads using the analysis requirements of Section F2.3. The collector shall not be designed for a load less than that stipulated by the applicable building code.

The required strength of the collector need not exceed the forces determined using load combination stipulated by the applicable building code including the amplified seismic load, applied to the building model in which all compression braces have been removed.

2205A.3.8 Section F2. *Add Section F2.4e as follows:*

4c. Multi-tiered Braced Frames: *Braced-frames configured with two or more tiers of bracing between diaphragm levels or locations of out-of-plane support shall comply with the additional requirements of this section:*

(1) Braces shall be used in symmetrical pairs at every tier level.

(2) Horizontal beams at intermediate tier levels for V- and inverted V-brace configurations shall have out-of-plane strength, stiffness, and beam-to-column connections adequate to resist torsional moments arising from brace buckling when braces are designed to buckle out-of-plane.

(3) Columns shall be restrained against rotation about their longitudinal axis at each intermediate tier level and shall resist out-of-plane bending moments due to second-order effects, geometric imperfections, and out-of-plane brace buckling.

2205A.4 MODIFICATIONS TO AISC 341. *[Reserved for CSI/PD]*

2205A.5 MODIFICATIONS TO AISC 358. [Reserved for OSHPD]

SECTION 2206A
COMPOSITE STRUCTURAL STEEL AND CONCRETE STRUCTURES

2206A.1 General. Systems of structural steel elements acting compositely with reinforced concrete shall be designed in accordance with AISC 360 and ACI 318, excluding ACI 318 Chapter 14.

2206A.2 Seismic Design. Where required, the seismic design, fabrication and erection of composite steel and concrete systems shall be in accordance with the additional provisions of Section 2206A.2.1.

2206A.2.1 Seismic requirements for composite structural steel and concrete construction. Where a response modification coefficient, *R*, in accordance with ASCE 7, Table 12.2-1 is used for the design of systems of structural steel acting compositely with reinforced concrete, the structures shall be designed and detailed in accordance with the requirements of AISC 341 *and shall be considered as an alternative system.*

Exception: *Steel and concrete composite special moment frame with the approved moment connection~~s~~ in accordance with AISC 358 Chapter 10 shall be permitted provided:*

1. *Beams are provided with Reduced Beam Sections (RBS),*

~~*2. Columns shall be Hollow Structural Sections (HSS) and completely filled with structural concrete having unit weight not less than 110 pounds per cubic foot (17 kN/m³). Concrete shall have 28-day compressive strength not less than 4,000 psi (28 MPa).*~~

2. ~~3.~~Web extension to beam web two sided fillet weld welds are sized to develop expected strength of the beam web and shall not be less than a ¼ inch fillet weld, and

~~*4. The high strength bolt design shall consider interaction between shear and tension as required by AISC 360, and*~~

3. ~~5.~~ The built-up box column wall thickness shall not be less than 1.25" and ~~T~~ the HSS column wall thickness shall not be less than ½ inch.

...

SECTION 2207A
STEEL JOISTS

...

2207A.4 Steel joist drawings. Steel joist placement plans shall be provided to show the steel joist products as specified on the *approved construction documents* and are to be utilized for field installation in accordance with specific project requirements as stated in Section 2207A.2. Steel joist placement plans shall include, at a minimum, the following:

...

~~Steel joist placement plans do not require the seal and signature of the joist manufacturer's registered design professional.~~

...

2207A.4.1 Design approval. [DSA-SS] *Joist and joist girder design calculations and profiles with member sizes and connection details, and joist placement plans shall be provided to the enforcement agency and approved prior to joist fabrication, in accordance with the California Administrative Code (Title 24, Part 1). Joist and joist girder design calculations and profiles with member sizes and connection details shall bear the signature and stamp or seal of the registered engineer or licensed architect responsible for the joist design. Alterations to the approved joist and joist girder design calculations and profiles with member sizes and connection details, or to fabricated joists are subject to the approval of the enforcement agency.*

...

2207A.6 Joist Chord Bracing. *The chords of all joists shall be laterally supported at all points where the chords change direction.*

...

SECTION 2208A
STEEL CABLE STRUCTURES

2208A.1 General. The design, fabrication and erection including related connections, and protective coatings of steel cables for buildings shall be in accordance with ASCE 19.

~~**2208.2 Seismic requirements for steel cable.** The design strength of steel cables shall be determined by the provisions of ASCE 19 except as modified by these provisions.~~

~~1. A load factor of 1.1 shall be applied to the prestress force included in T_3 and T_4 as defined in Section 3.12.~~

~~2. In Section 3.2.1, Item (c) shall be replaced with "1.5 T_3" and Item (d) shall be replaced with "1.5 T_4."~~

...

SECTION 2210*A*
COLD-FORMED STEEL

2210*A*.1 General. The design of cold-formed carbon and low alloy steel structural members shall be in accordance with AISI S100. The design of cold-formed stainless-steel structural members shall be in accordance with ASCE 8. Cold formed steel light-frame construction shall also comply with Section 2211*A*. Where required, the seismic design of cold formed steel structures shall be in accordance with the additional provisions of Section 2210*A*.2.

2210*A*.1.1 Steel decks. The design and construction of cold formed steel decks shall be in accordance with this section.

2210*A*.1.1.1 Noncomposite steel floor decks. Noncomposite steel floor decks shall be permitted to be designed and constructed in accordance with ANSI/SDI-NC1.0.

2210*A*.1.1.2 Steel roof deck. Steel roof decks shall be permitted to be designed and constructed in accordance with ANSI/SDI-RD1.0. *The base material thickness of steel deck shall not be less than 0.0359 inch (0.9 mm) (20 gage).*

> ***Exception: [DSA-SS]*** *For single-story open structures, the minimum deck thickness may be waived if the steel roof deck need not be used as the diaphragm and there are no suspended hangers or bracing for nonstructural components attached to the deck.*

~~***2210A.1.1.3 Composite slabs on steel decks.*** *Composite slabs of concrete and steel deck shall be permitted to be designed and constructed in accordance with ANSI/SDI-C.*~~

2210A.1.1.3 Composite slabs on steel decks. Composite slabs of concrete and steel deck shall be permitted to be designed and constructed in accordance with SDI-C.

2210*A*.2 Seismic requirements for cold-formed steel structures. Where a response modification coefficient, *R*, in accordance with ASCE 7, Table 12.2-1 is used for the design of cold-formed steel structures, the structures shall be designed and detailed in accordance with the requirements of AISI S100~~,~~ *and* ASCE 8. ~~, or, for cold-formed steel special-bolted moment frames, AISI S110.~~

SECTION 2211*A*
COLD-FORMED STEEL LIGHT-FRAME CONSTRUCTION

2211*A*.1 General. The design and installation of structural and nonstructural members utilized in cold-formed steel light-frame construction where the specified minimum base steel thickness is not greater than 0.1180 inches (2.997 mm) shall be in accordance with AISI S200 and Sections 2211*A*.2 through 2211*A*.7, or AISI S220, as applicable.

...

2211*A*.3 Truss design. Cold-formed steel trusses shall be designed in accordance with AISI S214, Sections 2211*A*.3.1 through 2211*A*.3.4 and accepted engineering practice.

Complete engineering analysis and truss design drawings shall accompany the construction documents submitted to the enforcement agency for approval. When load testing is required, the test report shall be submitted with the truss design drawings and engineering analysis to the enforcement agency.

2211*A*.3.1 Truss design drawings. The truss design drawings shall conform to the requirements of Section B2.3 of AISI S214 and shall be provided with the shipment of trusses delivered to the job site. The truss design drawings shall include the details of permanent individual truss member

restraint/bracing in accordance with Section B ~~6(a) or B 6(c)~~ of AISI S214 where these methods are utilized to provide restraint/bracing.

2211*A*.3.2 Deferred submittals. ~~AISI S214 Section B4.2 shall be deleted.~~ *Not permitted by DSA-SS.*

...

2211*A*.4 Structural wall stud design. Structural wall studs shall be designed in accordance with either AISI S211 or AISI S100.

Cold formed steel stud foundation plates or sills shall be bolted or fastened to the foundation or foundation wall in accordance with Section 2304.3.4, Item 2.

...

2211*A*.6 Lateral design. Light-frame shear walls, diagonal strap bracing that is part of a structural wall and diaphragms used to resist wind, seismic and other in-plane lateral loads shall be designed in accordance with AISI S213.

Shear wall assemblies in accordance with ~~per~~ Section C2.2.3 of AISI S213 are not permitted within the seismic force-resisting system of buildings.

2211*A*.7 Prescriptive framing. *Not permitted by DSA-SS.* ~~Detached one- and two-family *dwellings* and *townhouses*, less than or equal to three *stories above grade plane*, shall be permitted to be constructed in accordance with AISI S230 subject to the limitations therein.~~

SECTION 2212A [DSA-SS]
LIGHT MODULAR STEEL MOMENT FRAMES FOR
PUBLIC ELEMENTARY AND SECONDARY
SCHOOLS, AND COMMUNITY COLLEGES

2212A.1 General.

2212A.1.1 Configuration. *Light modular steel moment frame buildings shall be constructed of factory-assembled modules comprising a single-story moment-resisting space frame supporting a floor and roof. Individual modules shall not exceed a width of 14 feet (4.25 m) nor a length of 72*

feet (22 m). All connections of beams to corner columns shall be designed as moment-resisting in accordance with the criteria of Section 2212A.2. Modules may be stacked to form multistory structures not exceeding 35 feet or two stories in height. When stacked modules are evaluated separately, seismic forces on each module shall be distributed in accordance with Section 12.8.3 of ASCE 7, considering the modules in the stacked condition. See Section 2212A.2.5 of this code.

2212A.1.2 Design, fabrication and erection. *The design, fabrication and erection of light modular steel moment frame buildings shall be in accordance with the AISC Specification for Structural Steel Buildings (ANSI/AISC 360) and the AISI North American Specification for the Design of Cold Formed Structural Members (AISI/COS/ NASPEC), as applicable, and the requirements of this section. The maximum dead load of the roof and elevated floor shall not exceed 25 psf and 50 psf (1197 Pa and 2394 Pa), respectively. The maximum dead load of the exterior walls shall not exceed 45 psf (2155 Pa).*

2212A.2 Seismic requirements. *In addition to the other requirements of this code, the design, materials and workmanship of light modular steel moment frames shall comply with the requirements of this section. The response modification coefficient R shall be equal to 31/2. Cd and Ω0 shall be equal to 3.0.*

2212A.2.1 Base materials. *Beams, columns and connection materials shall be limited to those materials permitted under the AISC Specification for Structural Members (ANSI/AISC 360) and the AISI North American Specification for the Design of Cold Formed Structural Members (AISI/COS/NASPEC).*

2212A.2.2 Beam-to-column strength ratio. *At each moment-resisting connection the following shall apply:*

$$\frac{\sum S_{bi}F_{ybi}}{\sum S_{cj}F_{ycj}} \geq 1.4 \qquad \textbf{(Equation 22A-1)}$$

where:

F_{ybi} = *The specified yield stress of beam "i."*

F_{ycj} = *The specified yield stress of column "j."*

S_{bi} = *The flexural section modulus of each beam "i" that is moment connected to the column "j" at*

the connection.

S_{cj} = The flexural section modulus of each column "j" that is moment connected to the beam "i" at the connection.

Exceptions:

1. *Beam-to-column connections at the floor level beams of first or second-story modules need not comply with this requirement.*
2. *Beam-to-column strength ratios less than 1.4 are allowed if proven to be acceptable by analysis or testing.*

2212A.2.3 Welding. *Weld filler metals shall be capable of producing weld metal with a minimum Charpy V-Notch toughness of 20 ft-lb at 0°F. Where beam bottom flanges attach to columns with complete joint penetration groove welds and weld backing is used at the bottom surface of the beam flange, such backing shall be removed and the root pass back-gouged, repaired and reinforced with a minimum 3/16 inch (5 mm) fillet weld.*

2212A.2.4 Connection design. *Connections of beams to columns shall have the design strength to resist the maximum seismic load effect, E_m, calculated in accordance with Section 12.4.3 of ASCE 7.*

2212A.2.5 Multistory assemblies. *Analysis of multistory assemblies shall be permitted to consider the stacked modules as a single assembly, with restraint conditions between the stacked units that represent the actual method of attachment. Alternatively, it shall be permitted to analyze the individual modules of stacked assemblies independently, with lateral and vertical reactions from modules above applied as concentrated loads at the top of the supporting module.*

SECTION 2213A
TESTING AND FIELD VERIFICATION

2213A.1 Tests of High-strength Bolts, Nuts and Washers. *High-strength bolts, nuts and washers shall be sampled and tested by an approved independent testing laboratory for conformance with the requirements of applicable ASTM standards.*

2213A.2 Tests of End-welded Studs. *End-welded studs shall be tested in accordance with ~~per~~ the requirements of the AWS D1.1, Sections 7.7 and 7.8.*

All existing amendments that are not revised above shall continue without any change.

Notation for [DSA-SS]
Authority: Education Code § 17310 and 81142, and H&S Code §16022.
Reference: Education Code §§ 17280 through 17317, and 81130 through 81147, and Health and Safety Code §§16000 through 16023.

CHAPTER 23

WOOD

Adopt and/or codify chapter as amended below:

PROPOSED ADOPTION	DSA-SS	DSA-SS/CC	Comments
Adopt entire chapter without amendments			
Adopt entire chapter with amendments listed below	X	X	
Adopt only those sections listed below			
2301.1.1	X	X	
2301.1.2	X	X	
2301.1.3	X	X	
2301.1.3.1	X	-	
2301.1.3.2	-	X	
2301.1.4	X	X	
~~*2301.2, Item 4, Exception*~~	~~X~~	~~X~~	
2303.1.3.1	X	X	
2303.1.4.1	X	X	
2303.4.1.4.1, Exception 3	X	X	
2303.4.3.1	X	X	
2304.3.4	X	X	
2304.4.1	X	X	
~~*2304.5*~~	~~X~~	~~X~~	
~~*2304.6.1, Exception*~~	~~X~~	-	

2304.10.1.1 ~~2304.9.1.1~~	X	-	
2304.12.1.2 ~~2304.11.2.2~~, Exception	X	~~X~~ -	
2304.12.1.4.1 ~~2304.11.2.4.1~~	X	-	
2305.1.2	X	X	
~~2305.2, Exception~~	~~X~~	-	
~~2305.3, Exception~~	~~X~~	~~X~~	
~~2306.2, Exception~~	~~X~~	~~X~~	
~~2306.3, Exception~~	~~X~~	~~X~~	
2308.2.7 ~~2308.2, Item 8~~	X	X	
2309.1.1	X	X	

[All existing California amendments that are not revised below shall continue without change]

SECTION 2301
GENERAL

2301.1 Scope. The provisions of this chapter shall govern the materials, design, construction and quality of wood members and their fasteners.

2301.1.1 Application. [DSA-SS & DSA-SS/CC] *The scope of application of Chapter 23 is as follows:*

1. *Applications listed in Sections 1.9.2.1 and 1.9.2.2, regulated by the Division of the State Architect-Structural Safety (DSA-SS, and DSA-SS/CC). These applications include public elementary and secondary schools, community colleges and state-owned or state-leased essential services buildings.*

2. [Reserved for OSHPD]

2301.1.2 Identification of amendments. [DSA-SS & DSA-SS/CC] *Amendments appear in this chapter preceded with the appropriate acronym, as follows:*

1. *Division of the State Architect - Structural Safety:*

[DSA-SS] *- For applications listed in Section 1.9.2.1.*

[DSA-SS/CC] - For applications listed in Section 1.9.2.2

2. [Reserved for DSA/SS]

2301.1.3 Reference to other chapters.

2301.1.3.1 [DSA-SS] *Where reference within this chapter is made to sections in Chapters 16, 17, 18, 19, 21, and 22~~, and 34~~, the provisions in Chapters 16A, 17A, 18A, 19A, 21A, and 22A~~, and 34A~~ respectively shall apply instead.*

> ~~***Exception:*** *For DSA-SS, the requirements of Chapter 34 shall apply instead of Chapter 34A*~~

2301.1.3.2 [DSA-SS/CC] *Where reference within this chapter is made to sections in Chapters 17 and 18, the provisions in Chapters 17A and 18A respectively shall apply instead.*

2301.1.4 Prohibition. [Replaced from 2013 CBC, Section 2301.1.2] ***[DSA-SS & DSA-SS/CC]*** *The following design methods, systems, and materials are not permitted by DSA:*

1. *Straight-sheathed horizontal lumber diaphragms~~ are not permitted~~.*
2. *Gypsum-based sheathing shear walls and portland cement plaster shear walls.~~ are not permitted~~.*
3. *Shear wall foundation anchor bolt washers ~~shall be provided~~ in accordance with ~~AF & PA SDPWS Section 4.3.6.4.3. The~~ exception to ~~AF & PA~~ AWC SDPWS Section 4.3.6.4.3. ~~shall not apply.~~*
4. *Wood structural panel shear walls and diaphragms using staples as fasteners.~~ are not permitted.~~*
5. *Unblocked shear walls.~~ are not permitted.~~*
6. *Any wood structural panel sheathing used for diaphragms and shear walls that are part of the seismic force-resisting system, ~~shall be~~ not applied directly to framing members.*
7. *Single and double diagonally sheathed lumber walls ~~shall not be~~ used to resist seismic forces.*
8. [Replaced from 2013 CBC, 2301.2 Item 4] *Log structures in accordance with ICC 400.~~are not permitted by DSA~~.*
9. *Cross-laminated timber used as part of the seismic force resisting system, unless approved as*

an alternative system in accordance with Section 104.11.

2301.2 General design requirements. The design of structural elements or systems, constructed partially or wholly of wood or wood-based products, shall be in accordance with one of the following methods:

...

5. The design and construction of log structures shall be in accordance with the provisions of ICC 400.

~~[Relocated to 2301.1.4 Item 8]~~ ~~***Exception: [DSA-SS & DSA-SS/CC]*** *Log structures are not permitted by DSA.*~~

...

SECTION 2302
DEFINITIONS

2302.1 Definitions. The following terms are defined in Chapter 2:

...

NATURALLY DURABLE WOOD.

Decay resistant.

Termite resistant.

...

SECTION 2303
MINIMUM STANDARDS AND QUALITY

2303.1 General. Structural sawn lumber; end-jointed lumber; prefabricated wood I-joists; structural glued-

laminated timber; wood structural panels, fiberboard sheathing (when used structurally); hardboard siding (when used structurally); particleboard; preservative-treated wood; structural log members; structural composite lumber; round timber poles and piles; fire-retardant-treated wood; hardwood plywood; wood trusses; joist hangers; nails; and staples shall conform to the applicable provisions of this section.

...

2303.1.3 Structural glued-laminated timber. Glued-laminated timbers shall be manufactured and identified as required in ANSI/AITC A190.1 and ASTM D 3737.

2303.1.3.1 Additional requirements. [DSA-SS & DSA-SS/CC] *The construction documents shall indicate the following:*

1. *Dry or wet service conditions.*
2. *Laminating combinations and stress requirements.*
3. *Species group.*
4. *Preservative material and retention, when preservative treatment is required.*
5. *Provisions for protection during shipping and field handling, such as sealing and wrapping in accordance with AITC 111.*

When mechanical reinforcement such as radial tension reinforcement is required, such reinforcement shall comply with AITC 404 and shall be detailed accordingly in the construction documents. Construction documents shall specify that the moisture content of laminations at the time of manufacture shall not exceed 12% for dry conditions of use.

The design of fasteners and connections shall comply with AITC 117, Section I, Item 6 (Connection Design), and NDS Appendix E.

~~*Refer to Section 1705A.5.4 for special inspection requirements during fabrication of structural glued laminated timbers.*~~

2303.1.4 Structural glued cross-laminated timber. Cross-laminated timbers shall be manufactured and identified as required in ANSI/APA PRG 320.

2303.1.4.1 Additional requirements. [DSA-SS & DSA-SS/CC] *Requirements in Section 2303.1.3.1 shall apply to glued cross-laminated timber.*

...

2303.4.1.4.1 Truss design drawings. Where required by the *registered design professional*, the *building official*, or the statutes of the jurisdiction in which the project is to be constructed, each individual truss design drawing shall bear the seal and signature of the truss designer.

Exceptions:

1. Where a cover sheet and truss index sheet are combined into a single sheet and attached to the set of truss design drawings, the single cover/truss index sheet is the only document required to be signed and sealed by the truss designer.
2. When a cover sheet and a truss index sheet are separately provided and attached to the set of truss design drawings, the cover sheet and the truss index sheet are the only documents required to be signed and sealed by the truss designer.

*3. **[DSA-SS, DSA-SS/CC]** Exceptions 1 and 2 are not permitted by DSA.*

2303.4.2 Truss placement diagram. The truss manufacturer shall provide a truss placement diagram that identifies the proposed location for each individually designated truss and references the corresponding truss design drawing. The truss placement diagram shall be provided as part of the truss submittal package, and with the shipment of trusses delivered to the job site. Truss placement diagrams that serve only as a guide for installation and do not deviate from the *permit* submittal drawings shall not be required to bear the seal or signature of the truss designer.

2303.4.3 Truss submittal package. The truss submittal package provided by the truss manufacturer shall consist of each individual truss design drawing, the truss placement diagram, the permanent individual truss member restraint/bracing method and details and any other structural details germane to the trusses; as applicable, the cover/truss index sheet.

2303.4.3.1 Additional Requirements. [DSA-SS, DSA-SS/CC] *In addition to Sections 2303.4.1 and 2303.4.2, the following requirements apply:*

*1. **Construction Documents.** The construction documents prepared by the registered engineer or licensed architect for the project shall indicate all requirements for the truss design, including:*

1.1 Deflection criteria.

1.2 Connection details to structural and non-structural elements (e.g. non-bearing partitions).

2. ***Requirements for Approval.*** *The truss design drawings and engineering analysis shall be provided to the enforcement agency and approved prior to truss fabrication, in accordance with the California Administrative Code. Alterations to the approved truss design drawings or manufactured trusses are subject to the approval of the enforcement agency.*

~~***3. Special inspection during truss manufacture.*** *Refer to Section 1705A.5.5 for special inspection requirements during the manufacture of open web trusses.*~~

2303.4.4 Anchorage. The design for the transfer of loads and anchorage of each truss to the supporting structure is the responsibility of the *registered design professional.*

2303.4.5 Alterations to trusses. Truss members and components shall not be cut, notched, drilled, spliced or otherwise altered in any way without written concurrence and approval of a *registered design professional.* Alterations resulting in the addition of loads to any member (e.g., HVAC equipment, piping, additional roofing or insulation, etc.) shall not be permitted without verification that the truss is capable of supporting such additional loading.

2303.4.6 TPI 1 Specifications. In addition to Sections 2303.4.1 through 2303.4.5, the design, manufacture and quality assurance of metal-plate-connected wood trusses shall be in accordance with TPI 1. Job-site inspections shall be in compliance with Section 110.4, as applicable.

2303.4.7 Truss quality assurance. Trusses not part of a manufacturing process in accordance with either Section 2303.4.6 or a standard listed in Chapter 35, which provides requirements for quality control done under the supervision of a third-party quality control agency, shall be manufactured in compliance with Sections 1704.2 and 1704.6, as applicable.

...

SECTION 2304
GENERAL CONSTRUCTION REQUIREMENTS

2304.1 General. The provisions of this section apply to design methods specified in Section 2301.2.

2304.2 Size of structural members. Computations to determine the required sizes of members shall be based on the net dimensions (actual sizes) and not nominal sizes.

2304.3 Wall framing. The framing of exterior and interior walls shall be in accordance with the provisions

specified in Section 2308 unless a specific design is furnished.

2304.3.1 Bottom plates. Studs shall have full bearing on a 2-inch-thick (actual $1^1/_2$-inch, 38 mm) or larger plate or sill having a width at least equal to the width of the studs.

2304.3.2 Framing over openings. Headers, double joists, trusses or other approved assemblies that are of adequate size to transfer loads to the vertical members shall be provided over window and door openings in load-bearing walls and partitions.

2304.3.3 Shrinkage. Wood walls and bearing partitions shall not support more than two floors and a roof unless an analysis satisfactory to the building official shows that shrinkage of the wood framing will not have adverse effects on the structure or any plumbing, electrical or mechanical systems, or other equipment installed therein due to excessive shrinkage or differential movements caused by shrinkage. The analysis shall also show that the roof drainage system and the foregoing systems or equipment will not be adversely affected or, as an alternate, such systems shall be designed to accommodate the differential shrinkage or movements.

2304.3.4 Additional requirements. [DSA-SS, DSA-SS/CC] *The following additional requirements apply:*

1. *Engineering analysis shall be furnished that demonstrates compliance of wall framing elements and connections with Section 2301.2, Item 1 or 2.*

2. *Construction documents shall include detailing of sill plate anchorage to supporting masonry or concrete for all exterior and interior bearing, non-bearing and shear walls. Unless specifically designed in accordance with item 1 above, sills under exterior walls, bearing walls and shear walls shall be bolted to masonry or concrete with 5/8" diameter by 12 inch (16 mm by 305 mm) bolts spaced not more than four (4) feet (1219 mm) on center, with a minimum of two (2) bolts for each piece of sill plate. Anchor bolts shall have a 4 inch minimum and a 12 inch maximum clearance to the end of the sill plate, and 7 inch minimum embedment into concrete or masonry.*

   Unless specifically designed in accordance with item 1 above, sill plates under non-bearing interior partitions on concrete floor slabs shall be anchored at not more than four (4) feet (1219 mm) on center to resist a minimum allowable stress shear of 100 pounds per linear foot (1.4 kN/m) acting either parallel or perpendicular to the wall.

3. *Construction documents shall include detailing and limitations for notches and bored holes in wall studs, plates and sills.*

2304.4 Floor and roof framing. The framing of wood-joisted floors and wood framed roofs shall be in accordance with the provisions specified in Section 2308 unless a specific design is furnished.

2304.4.1 Additional requirements. [DSA-SS, DSA-SS/CC] *The following additional requirements apply:*

1. *Engineering analysis shall be furnished that demonstrates compliance of floor, roof and ceiling framing elements and connections with Section 2301.2, Items 1 or 2.*
2. *Construction documents shall include detailing and limitations for notches and bored holes in floor and roof framing members.*

...

2304.6.1 Wood structural panel sheathing.

...

~~***Exception: [DSA-SS]*** *Wind pressure shall be calculated in accordance with Section 1609A.*~~

...

2304.10 Connections and fasteners.

...

2304.10.1 Fastener requirements. Connections for wood members shall be designed in accordance with the appropriate methodology in Section 2301.2. The number and size of fasteners connecting wood members shall not be less than that set forth in Table 2304.10.1.

2304.10.1.1 ~~***2304.9.1.1***~~ ***Additional requirements. [DSA-SS]*** *Fasteners used for the attachment of exterior wall coverings shall be of hot-dipped zinc-coated galvanized steel, mechanically deposited zinc-coated steel, stainless steel, silicon bronze or copper. The coating weights for hot-dipped zinc-coated fasteners shall be in accordance with ASTM A 153. The coating weights for mechanically deposited zinc coated fasteners shall be in accordance with ASTM B 695, Class 55 minimum.*

...

2304.12.1.2 Wood supported by exterior foundation walls. Wood framing members, including wood sheathing, that rest on exterior foundation walls and are less than 8 inches (203 mm) from exposed earth shall be of naturally durable or preservative-treated wood.

Exception: [DSA-SS] *At exterior walls where the earth is paved with an asphalt or concrete slab at least 18 inches (457 mm) wide and draining away from the building, the bottom of sills are permitted to be 6 inches (152 mm) above the top of such slab. Other equivalent means of termite and decay protection may be accepted by the enforcement agency.*

...

2304.12.1.4 Sleepers and sills. Sleepers and sills on a concrete or masonry slab that is in direct contact with earth shall be of naturally durable or preservative-treated wood.

2304.12.1.4.1 ~~***2304.11.2.4.1***~~ ***Additional Requirements. [DSA-SS]*** *Stud walls or partitions at shower or toilet rooms with more than two plumbing fixtures, excluding floor drains, and stud walls adjacent to unroofed paved areas shall rest on a concrete curb extending at least 6 inches (152 mm) above finished floor or pavement level.*

...

SECTION 2305
GENERAL DESIGN REQUIREMENTS FOR LATERAL-FORCE-RESISTING SYSTEMS

...

2305.1.1 Openings in shear panels. Openings in shear panels that materially affect their strength shall be detailed on the plans, and shall have their edges adequately reinforced to transfer all shearing stresses.

2305.1.2 Additional Requirements. [DSA-SS, DSA-SS/CC] *See Section 2301.1.4 for modifications to AWC SDPWS.* ~~*The following limitations shall apply:*~~

~~*[Relocated to Section 2301.1.4]*~~

~~*1. Straight sheathed horizontal lumber diaphragms are not permitted.*~~

~~*2. Gypsum-based sheathing shear walls and portland cement plaster shear walls are not*~~

~~*permitted.*~~

~~*3. Shear wall foundation anchor bolt washers shall be provided in accordance with AF & PA SDPWS Section 4.3.6.4.3. The exception to AF & PA SDPSWS Section 4.3.6.4.3 shall not apply.*~~

~~*4. Wood structural panel shear walls and diaphragms using staples as fasteners are not permitted.*~~

~~*5. Unblocked shear walls are not permitted.*~~

~~*6. Any wood structural panel sheathing used for diaphragms and shear walls that are part of the seismic force resisting system shall be applied directly to framing members.*~~

~~*7. Single and double diagonally sheathed lumber walls shall not be used to resist seismic forces.*~~

2305.2 Diaphragm deflection.

...

~~***Exception: [DSA-SS, DSA-SS/CC]*** *Section 2305.2 is not permitted by DSA*~~

...

2305.3 Shear wall deflection

...

~~***Exception: [DSA-SS, DSA-SS/CC]*** *Section 2305.3 is not permitted by DSA*.~~

...

SECTION 2306
ALLOWABLE STRESS DESIGN

2306.1 Allowable stress design. The structural analysis and construction of wood elements in structures using *allowable stress design* shall be in accordance with the following applicable standards:

...

2306.2 Wood-frame diaphragms. Wood-frame diaphragms shall be designed and constructed in accordance with AWC SDPWS. Where panels are fastened to framing members with staples,

requirements and limitations of AWC SDPWS shall be met and the allowable shear values set forth in Table 2306.2(1) or 2306.2(2) shall be permitted. The allowable shear values in Tables 2306.2(1) and 2306.2(2) are permitted to be increased 40 percent for wind design.

~~***Exception: [DSA-SS, DSA-SS/CC]*** *Wood structural panel diaphragms using staples as fasteners are not permitted by DSA.*~~

...

2306.3 Wood-frame shear walls. Wood-frame shear walls shall be designed and constructed in accordance with AWC SDPWS. Where panels are fastened to framing members with staples, requirements and limitations of AWC SDPWS shall be met and the allowable shear values set forth in Table 2306.3(1), 2306.3(2) or 2306.3(3) shall be permitted. The allowable shear values in Tables 2306.3(1) and 2306.3(2) are permitted to be increased 40 percent for wind design. Panels complying with ANSI/APA PRP-210 shall be permitted to use design values for Plywood Siding in the AWC SDPWS.

~~***Exception: [DSA-SS, DSA-SS/CC]*** *Wood structural panel shear walls using staples as fasteners are not permitted by DSA.*~~

...

SECTION 2308
CONVENTIONAL LIGHT-FRAME CONSTRUCTION

...

2308.2.7 ~~*8.*~~ ***Additional requirements*** ***[DSA-SS & DSA-SS/CC]*** *The use of conventional light-frame construction provisions in this section is permitted, subject to the following conditions:*

1. ~~*8.1.*~~ *The design and construction shall also comply with Section 2304 and Section 2305.*
2. ~~*8.2.*~~ *In conjunction with the use of provisions in Section 2308.6* ~~*2308.3*~~ *(*~~*Braced Wall Lines*~~ *bracing), engineering analysis shall be furnished that demonstrates compliance of lateral-force-resisting systems with Section 2305.*

3. ~~8.3.~~ *In addition to the use of provisions in Section 2308.4 ~~2308.8~~ (Floor framing ~~Joists~~), engineering analysis shall be furnished that demonstrates compliance of floor framing elements and connections with Section 2301.2, Item 1 or 2.*
4. ~~8.4.~~ *In addition to the use of provisions in Section 2308.5 ~~2308.9~~ (Wall construction ~~Framing~~), engineering analysis shall be furnished that demonstrates compliance of wall framing elements and connections with Section 2301.2, Item 1 or 2.*
5. ~~8.5.~~ *In addition to the use of provisions in Section 2308.7 ~~2308.10~~ (Roof and Ceiling Framing), engineering analysis shall be furnished demonstrating compliance of roof and ceiling framing elements and connections with Section 2301.2, Item 1 or 2.*

...

SECTION 2309
WOOD FRAME CONSTRUCTION MANUAL

2309.1 Wood Frame Construction Manual. Structural design in accordance with AWC WFCM shall be permitted for buildings assigned to Risk Category I or II subject to the limitations of Section 1.1.3 of the AWC WFCM and the load assumption contained therein. Structural elements beyond these limitations shall be designed in accordance with accepted engineering practice.

2309.1.1 Additional requirements [DSA-SS & DSA-SS/CC] *The use of the AWC WFCM is permitted provided the design and construction also comply with Sections 2304, 2305, and 2301.2, Item 1 or 2 and engineering analysis is furnished demonstrating compliance.*

[All existing amendments that are not revised above shall continue with no change]

Notation for [DSA-SS]
Authority: Education Code § 17310 and 81142, and H&S Code §16022.
Reference: Education Code §§ 17280 through 17317, and 81130 through 81147, and Health and Safety Code §§16000 through 16023.

Notation for [DSA-SS/CC]
Authority: Education Code § 81053.
Reference: Education Code §§ 81052, 81053, and 81130 through 81147.

CHAPTER 24
GLASS AND GLAZING

Adopt and/or codify chapter as amended below:

PROPOSED ADOPTION	*DSA-SS*	DSA-SS/CC	Comments
Adopt entire chapter without amendments			
Adopt entire chapter with amendments listed below	X	X	
Adopt only those sections listed below			
2403.2.1	X	X	
Table 2403.2.1	X	X	
2410	X	X	

(All existing amendments that are not revised below shall continue without any change.)

...

SECTION 2401
GENERAL

2401.1 Scope. The provisions of this chapter shall govern the materials, design, construction and quality of glass, light- transmitting ceramic and light-transmitting plastic panels for exterior and interior use in both vertical and sloped applications in buildings and structures.

...

SECTION 2403
GENERAL REQUIREMENTS FOR GLASS

2403.1 Identification. Each pane shall bear the manufacturer's mark designating the type and thickness of the glass or glazing material. The identification shall not be omitted unless approved and an affidavit is furnished by the glazing contractor certifying that each light is glazed in accordance with approved construction documents that comply with the provisions of this chapter. Safety glazing shall be identified in accordance with Section 2406.2.

...

2403.2 Glass supports. Where one or more sides of any pane of glass are not firmly supported, or are subjected to unusual load conditions, detailed construction documents, detailed shop drawings and analysis or test data ensuring safe performance for the specific installation shall be prepared by a registered design professional.

2403.2.1 Additional Requirements. [DSA-SS, DSA-SS/CC] *In addition to the requirements of Section 2403.2, glass supports shall comply with the following:*

1. *The construction documents and analysis or test data required per Section 2403.2 shall be submitted to the enforcement agency for approval.*

2. *Glass firmly supported on all four edges shall be glazed with minimum laps and edge clearances set forth in Table 2403.2.1.*

TABLE 2403.2.1
MINIMUM GLAZING REQUIREMENTS

Fixed Windows and Openable Windows Other Than Horizontal Siding					
GLASS AREA	*UP TO 6 SQ. FT.*	*6 TO 14 SQ. FT.*	*14 TO 32 SQ. FT.*	*32 TO 50 SQ. FT.*	*OVER 50 SQ. FT.*
× 0.0929 for m^2, × 25.4 for mm					
1. Minimum Frame Lap	*1/4"*	*1/4"*	*5/16"*	*3/8"*	*1/2"*
2. Minimum Glass Edge Clearance	*1/8"[1,2]*	*1/8"[1,2]*	*3/16"[1]*	*1/4"*	*1/4"[1]*
3. Continuous Glazing Rabbet and Glass Retainer[3]	*Required*				
4. Resilient Setting Material[4]	*Not Required*	*Required*			
Sliding Doors and Horizontal Sliding Windows					
GLASS AREA		*UP TO 14 SQ. FT.*	*14 TO 32 SQ. FT.*	*32 TO 50 SQ. FT.*	*OVER 50 SQ. FT.*
× 0.0929 for m^2, × 25.4 for mm					
5. Minimum Glass Frame Lap		*1/4"*	*5/16"*	*3/8"*	*1/2"*

6. Minimum Glass Edge Clearance	*1/8"[2]*	*3/16"*	*1/4"*	*1/4"*
7. Continuous Glazing Rabbet and Glass Retainer[3]	*Required above third story*	*Required*		
8. Resilient Setting Material[4]	*Not Required*		*Required*	

[1] Glass edge clearance in fixed openings shall not be less than required to provide for wind and earthquake drift.

[2] Glass edge clearance at all sides of pane shall be a minimum of 3/16 inch (4.8 mm) where height of glass exceeds 3 feet (914 mm).

[3] Glass retainers such as metal, wood or vinyl face stops, glazing beads, gaskets, glazing clips and glazing channels shall be of sufficient strength and fixation to serve this purpose.

[4] Resilient setting material shall include preformed rubber or vinyl plastic gaskets or other materials which are proved to the satisfaction of the building official to remain resilient.

***

Section 2410 [DSA-SS, DSA-SS/CC]
Structural Sealant Glazing (SSG)

2410.1 General. *The requirements of this section address the use of Structural Sealant Glazing (SSG). These requirements shall not be used for butt joint glazing, point supported glass, and glass fins.*

Design, construction, testing, and inspection shall satisfy the requirements of this code except as modified in Sections 2410.1.1 through 2410.1.4.

2410.1.1 Design. *Design of Structural Sealant Glazing (SSG) shall satisfy the following requirements:*

1. *SSG shall be weather tight and serviceable, as defined in AAMA 501.4, under design story drifts associated with the Design Earthquake and no glass fallout shall occur at the drifts determined by ASCE 7 Section 13.5.9.*

2. *The sealant utilized in the insulated glass units used in SSG shall be designed in accordance with ASTM C 1249. The insulated glass unit design shall be in accordance with ASTM C 1249 Section 6.7.2.*

3. *Allowable stress for SSG shall not exceed 20 psi and shall have a minimum factor of safety of 5 in accordance with ASTM C 1401.*

4. *Design methodology shall address seismic movement in accordance with ASTM C 1401 Section 30.3.4.*

5. *SSG systems shall be supported for self-weight and lateral loading at each floor level of the building.*

6. *Unitized SSG framing shall be anchored to the building floor bearing plate by screws or bolts and shall not rely upon gravity or frictional forces for attachment.*

7. *Framing shall satisfy the out-of-plane deflection requirements of this code.*

2410.1.2 Testing and Inspection. *Testing and inspection of Structural Sealant Glazing (SSG) shall satisfy the following requirements:*

a. *The seismic drift capability of structural sealant glazing shall be determined by tests in accordance with AAMA 501.6, AAMA 501.4 and ASCE 7 Section 13.5.9.2.*

b. *The applicability of the specific AAMA 501.6 and AAMA 501.4 testing shall be subject to approval by the building official.*

c. *The panel test specimens used in the AAMA 501.6 and AAMA 501.4 testing shall include all glass types (annealed, heat strengthened, laminated, tempered) and insulated glass units that comprise more than 5% of the total glass curtain wall area used in the building.*

d. *AAMA 501.4 test specimen shall include the same materials, sections, connections, and attachment details to the test apparatus as used in the building.*

e. *Serviceability tests of SSG test specimen shall be performed in accordance with AAMA 501.4 after seismic displacement tests to the design story drift.*

f. *The window wall system using structural sealant by different manufacturer/product category shall be qualified in accordance with AAMA 501.6 and AAMA 501.4 testing for the seismic drift required. Analysis as an alternative to testing is not acceptable for the purposes of satisfying the seismic drift requirements of the SSG system.*

g. *Where unitized SSG is used with horizontal stack joints at each floor level and split vertical mullions that can move independently, only a story height single unit need to be tested under AAMA 501.6. Where continuous horizontal bands of SSG are used in the building, either two or four sided, the aspect ratio (height-to-length) of the test specimen shall be less than 1.0, contain not less than two interior vertical joints and all joints (vertical in the case of two sided), including the perimeter of the glass, shall be glazed with SSG.*

h. *Where SSG continues around corners, the AAMA 501.4 test specimen shall include one corner panel to verify the kinematics of the corner condition under seismic drift.*

~~i.~~ *Quality assurance and inspection requirements shall include formalized post-installation tests using the Point Load Testing procedure in accordance with ASTM C 1392. The Point Load Tests shall be done after the initial installation.* ~~*, then once every year for 3 years, not less than one test per elevation each time.*~~

> ~~***Exception: [DSA-SS, DSA-SS/CC]*** *For two sided SSG systems where the horizontal edges are mechanically attached to mullions, the yearly point load test for 3 years is not required.*~~

j. *Where the SSG is field assembled, hand pull tab tests in accordance with ASTM C1401 Section X2.1, one test every 100 linear feet, but not less than one test for each building elevation view shall be required.*

Existing AAMA 501.4 and 501.6 test results satisfying the requirements of this section shall be permitted, in lieu of project specific tests, when approved by the building official.

2410.1.3 Monitoring. *Short and Long term periodic performance monitoring shall be provided in accordance with ASTM C 1401, C 1392, and C 1394. Inspection frequencies recommended in ASTM C 1392 Section 5.1 shall be followed.*

After every significant seismic event, where the Peak ~~g~~ Ground ~~shaking~~ ~~a~~ Acceleration (PGA) at the site exceeds 0.3g, or the acceleration at any monitored building level (if any) exceeds 0.8g, as measured by the seismic monitoring system in the building, the owner shall retain a structural engineer to make an inspection of the SSG system. The inspection shall include viewing the performance of the panel, structural sealant, glass, reviewing the strong motion records, and a visual examination of the overall performance for deterioration, offset or physical damage. A report for each inspection, including conclusions on the continuing adequacy of the SSG system, shall be submitted to the enforcement agency.

> ***Exception: [DSA-SS, DSA-SS/CC]*** *The inspection requirements triggered by specific ground shaking acceleration or measured building acceleration is not required.*

2410.1.4 Construction Documents. *Complete design of the SSG system for gravity, wind, and seismic forces shall be subject to review by the enforcement agency. Construction documents shall show structural details of glass and curtain wall system including:*

1. *A design narrative explaining how the SSG is supported by the building and the mechanism used to accommodate seismic racking.*
2. *Type of SSG and whether field or shop built.*
3. *The means of supporting the glass during structural sealant curing time shall be shown in the construction documents.*
4. *Typical curtain wall panel elevation, plan view, and sections.*
5. *Details of building corner joint to verify how the corner vertical mullion will move to accommodate the seismic drift.*
6. *Joints between panel and floors at top and bottom.*
7. *Joint between panels – including vertical & horizontal stack joints at intermediate and edge mullion.*
8. *Member sizes for curtain wall panels.*
9. *Glass pane sizes, thickness and type of glass.*
10. *Contact width and thickness of structural sealant and sealant materials for shop and field installation/re-glazing.*

11. *Glass to aluminum joints (including primers, if any).*
12. *Maximum roof/floor dead and live load deflection of the roof/floor framing members supporting the exterior curtain wall system.*
13. *Required seismic separation or gap distance between the structural sealant glazing curtain wall and other adjacent cladding units.*
14. *Mitigation of galvanic reactions between the roof/floor slab anchors, steel screw connections of aluminum sections and the aluminum anchorage components, if any.*

All existing amendments that are not revised above shall continue without any changes.

Notation for [DSA-SS]
Authority: Education Code § 17310 and 81142, and H&S Code §16022.
Reference: Education Code §§ 17280 through 17317, and 81130 through 81147, and Health and Safety Code §§16000 through 16023.

Notation for [DSA-SS/CC]
Authority: Education Code § 81053.
Reference: Education Code §§ 81052, 81053, and 81130 through 81147.

CHAPTER 25

GYPSUM BOARD, GYPSUM PANEL PRODUCTS AND PLASTER

Adopt and/or codify chapter as amended below:

PROPOSED ADOPTION	DSA-SS	DSA-SS/CC	Comments
Adopt entire chapter without amendments			
Adopt entire chapter with amendments listed below	**X**	**X**	
Adopt only those sections listed below			
2501.1.1 ~~*2501.2*~~	X	X	
2503.2	X	X	
2504.2	X	X	
2504.2.1	X	X	
2505.3	X	X	
2507.3	X	X	

2508.5.6	X	X	
2514.1 Exception	X	-	

[All existing California amendments that are not revised below shall continue without change]

...

SECTION 2501
GENERAL

2501.1 Scope. Provisions of this chapter shall govern the materials, design, construction and quality of gypsum board, gypsum panel products, lath, gypsum plaster, cement plaster and reinforced gypsum concrete.

...

2501.1.1 ~~2501.2~~ Additional Requirements. [DSA-SS, DSA-SS/CC] *Details of attachment for wall and ceiling coverings which are not provided for in this code ~~these regulations~~ shall be detailed in the approved construction documents.*

...

SECTION 2503
INSPECTION

2503.1 Inspection. Lath, gypsum board and gypsum panel products shall be inspected in accordance with Section 110.3.5.

2503.2 Additional requirements for inspection and testing. [DSA-SS, DSA-SS/CC]

1. *Lath, ~~and~~ gypsum board and gypsum panel products shall be inspected in accordance with Chapter 17A and the California Administrative Code.*

2. *No lath, gypsum board and gypsum panel products ~~or gypsum wallboard~~ or their attachments shall be covered or finished until it has been inspected and approved by the inspector of record and/or special inspector.*

3. The enforcement agency may require tests in accordance with Table 2506.2 to determine compliance with the provisions of this code. ~~these regulations.~~

4. The testing of gypsum board and gypsum panel ~~and gypsum~~ products shall conform with standards listed in Table 2506.2.

...

SECTION 2504
VERTICAL AND HORIZONTAL ASSEMBLIES

2504.1 Scope. The following requirements shall be met where construction involves gypsum board, gypsum panel products or lath and plaster in vertical and horizontal assemblies.

...

2504.2 Additional Requirements. [DSA-SS, DSA-SS/CC] *In addition to the requirements of this section, the horizontal and vertical assemblies of plaster, ~~or~~ gypsum board or gypsum panel products shall be designed to resist the loads specified in this code. ~~For suspended acoustical ceiling systems, see Section 2506. For gypsum construction, see Section 2508.~~*

2504.2.1 Wood Furring Strips. *Wood furring strips for ceilings fastened to floor or ceiling joist shall be nailed at each bearing with two common wire nails, one of which shall be a slant nail and the other a face nail, or by one nail having spirally grooved or annular grooved shanks approved by the enforcement agency for this purpose. All stripping nails shall penetrate not less than 1 3/4 inches (44.5 mm) into the member receiving the point. Holes in stripping at joints shall be subdrilled to prevent splitting.*

Where common wire nails are used to support horizontal wood stripping for plaster ceilings, such stripping shall be wire tied to the joists 4 feet (1219 mm) on center with two strands of No. 18 W&M gage galvanized annealed wire to an 8d common wire nail driven into each side of the joist 2 inches (51 mm) above the bottom of the joist or to each end of a 16d common wire nail driven horizontally through the joist 2 inches (51 mm) above the bottom of the joist, and the ends of the wire secured together with three twists of the wire.

SECTION 2505
SHEAR WALL CONSTRUCTION

...

2505.3 [DSA-SS, DSA-SS/CC] *Section 2505.1 and 2505.2 are not permitted.*

...

SECTION 2507
LATHING AND PLASTERING

2507.1 General. Lathing and plastering materials and accessories shall be marked by the manufacturer's designation to indicate compliance with the appropriate standards referenced in this section and stored in such a manner to protect them from the weather.

2507.2 Standards. Lathing and plastering materials shall conform to the standards listed in Table 2507.2 and Chapter 35 and, where required for fire protection, shall also conform to the provisions of Chapter 7.

2507.3 Lath attachment to horizontal wood supports. [DSA-SS, DSA-SS/CC] *Where interior or exterior lath is attached to horizontal wood supports, either of the following attachments shall be used in addition to the methods of attachment described in referenced standards listed in Table 2507.2.*

1. *Secure lath to alternate supports with ties consisting of a double strand of No. 18 W & M gage galvanized annealed wire at one edge of each sheet of lath. Wire ties shall be installed not less than 3 inches (76 mm) back from the edge of each sheet and shall be looped around stripping, or attached to an 8d common wire nail driven into each side of the joist 2 inches (51 mm) above the bottom of the joist or to each end of a 16d common wire nail driven horizontally through the joist 2 inches (51 mm) above the bottom of the joist and the ends of the wire secured together with three twists of the wire.*

2. *Secure lath to each support with 1/2-inch-wide (12.7 mm), 1 1/2-inch-long (38mm) No. 9 W & M gage, ring shank, hook staple placed around a 10d common nail laid flat under the surface of the lath not more than 3 inches (76 mm) from edge of each sheet. Such staples may be placed over*

ribs of 3/8-inch (9.5 mm) rib lath or over back wire of welded wire fabric or other approved lath, omitting the 10d nails.

SECTION 2508
GYPSUM CONSTRUCTION

2508.1 General.

...

2508.5.6 Diaphragm ceiling connection to partitions. [DSA-SS, DSA-SS/CC] *Gypsum board shall not be used in diaphragm ceilings to resist lateral forces imposed by partitions. Connection of diaphragm ceiling to the vertical lateral force resisting elements shall be designed and detailed to transfer lateral forces.*

...

SECTION 2514
REINFORCED GYPSUM CONCRETE

2514.1 General. Reinforced gypsum concrete shall comply with the requirements of ASTM C 317 and ASTM C 956.

> ***Exception:*** *[Relocated from Section 1911A]* ***[DSA-SS]*** *Reinforced gypsum concrete shall be considered as an alternative system.*

...

[All existing amendments are continued without any change]

Notation for [DSA-SS]
Authority: Education Code § 17310 and 81142, and H&S Code §16022.
Reference: Education Code §§ 17280 through 17317, and 81130 through 81147, and Health and Safety Code §§16000 through 16023.

Notation for [DSA-SS/CC]
Authority: Education Code § 81053.
Reference: Education Code §§ 81052, 81053, and 81130 through 81147.

CHAPTER 26
PLASTIC

PROPOSED ADOPTION	DSA-SS	DSA-SS/CC	Comments
Adopt entire chapter	X	X	
Adopt entire chapter with amendments listed below			
Adopt only those sections listed below			
2603.11.1	X	X	
2603.12.3	X	X	

...

SECTION 2603
FOAM PLASTIC INSULATION

...

2603.11 Cladding attachment over foam sheathing to masonry or concrete wall construction. Cladding shall be specified and installed in accordance with Chapter 14 and the cladding manufacturer's installation instructions or an approved design. Foam sheathing shall be attached to masonry or concrete construction in accordance with the insulation manufacturer's installation instructions or an approved design. Furring and furring attachments through foam sheathing shall be designed to resist design loads determined in accordance with Chapter 16, including support of cladding weight as applicable. Fasteners used to attach cladding or furring through foam sheathing to masonry or concrete substrates shall be approved for application into masonry or concrete material and shall be installed in accordance with the fastener manufacturer's installation instructions.

Exceptions:

1. Where the cladding manufacturer has provided approved installation instructions for application over foam sheathing and connection to a masonry or concrete substrate, those requirements

shall apply.

2. For exterior insulation and finish systems, refer to Section 1408.

3. For anchored masonry or stone veneer installed over foam sheathing, refer to Section 1405.

2603.11.1 Additional Requirements. [DSA-SS, DSA-SS/CC] *In addition to the requirements of Section 2603.11, cladding and foam sheathing supports and attachments shall be designed and submitted to the enforcement agency for approval.*

2603.12 Cladding attachment over foam sheathing to cold-formed steel framing. Cladding shall be specified and installed in accordance with Chapter 14 and the cladding manufacturer's approved installation instructions, including any limitations for use over foam plastic sheathing, or an approved design. Where used, furring and furring attachments shall be designed to resist design loads determined in accordance with Chapter 16. In addition, the cladding or furring attachments through foam sheathing to framing shall meet or exceed the minimum fastening requirements of Sections 2603.12.1 and 2603.12.2, or an approved design for support of cladding weight.

Exceptions:

1. Where the cladding manufacturer has provided approved installation instructions for application over foam sheathing, those requirements shall apply.

2. For exterior insulation and finish systems, refer to Section 1408. 3. For anchored masonry or stone veneer installed over foam sheathing, refer to Section 1405.

2603.12.1 Direct attachment. Where cladding is installed directly over foam sheathing without the use of furring, cladding minimum fastening requirements to support the cladding weight shall be as specified in Table 2603.12.1.

2603.12.2 Furred cladding attachment. Where steel or wood furring is used to attach cladding over foam sheathing, furring minimum fastening requirements to support the cladding weight shall be as specified in Table 2603.12.2. Where placed horizontally, wood furring shall be preservative-treated wood in accordance with Section 2303.1.9 or naturally durable wood and fasteners shall be corrosion resistant in accordance Section 2304.10.5. Steel furring shall have a minimum G60 galvanized coating.

2603.12.3 Additional Requirements. [DSA-SS, DSA-SS/CC] *In addition to the requirements of Section 2603.12, 2603.12.1, and 2603.12.2, cladding and foam sheathing supports and attachments shall be*

designed and submitted to the enforcement agency for approval.

***

Notation for [DSA-SS]
Authority: Education Code § 17310 and 81142, and H&S Code §16022.
Reference: Education Code §§ 17280 through 17317, and 81130 through 81147, and Health and Safety Code §§16000 through 16023.

Notation for [DSA-SS/CC]
Authority: Education Code § 81053.
Reference: Education Code §§ 81052, 81053, and 81130 through 81147.

CHAPTER 30
ELEVATORS AND CONVEYING SYSTEMS

PROPOSED ADOPTION	DSA-SS	DSA-SS/CC	Comments
Adopt entire chapter	X	X	
Adopt entire chapter with amendments listed below			
Adopt only those sections listed below			

Notation for [DSA-SS]
Authority: Education Code § 17310 and 81142, and H&S Code §16022.
Reference: Education Code §§ 17280 through 17317, and 81130 through 81147, and Health and Safety Code §§16000 through 16023.

Notation for [DSA-SS/CC]
Authority: Education Code § 81053.
Reference: Education Code §§ 81052, 81053, and 81130 through 81147.

CHAPTER 31
SPECIAL CONSTRUCTION

PROPOSED ADOPTION	DSA-SS	DSA-SS/CC	Comments
Adopt entire chapter	X	X	
Adopt entire chapter with			

amendments listed below			
Adopt only those sections listed below			

Notation for [DSA-SS]
Authority: Education Code § 17310 and 81142, and H&S Code §16022.
Reference: Education Code §§ 17280 through 17317, and 81130 through 81147, and Health and Safety Code §§16000 through 16023.

Notation for [DSA-SS/CC]
Authority: Education Code § 81053.
Reference: Education Code §§ 81052, 81053, and 81130 through 81147.

CHAPTER 32
ENCROACHMENTS INTO THE PUBIC RIGHT-OF-WAY

PROPOSED ADOPTION	DSA-SS	DSA-SS/CC	Comments
Adopt entire chapter	X	X	
Adopt entire chapter with amendments listed below			
Adopt only those sections listed below			

Notation for [DSA-SS]
Authority: Education Code § 17310 and 81142, and H&S Code §16022.
Reference: Education Code §§ 17280 through 17317, and 81130 through 81147, and Health and Safety Code §§16000 through 16023.

Notation for [DSA-SS/CC]
Authority: Education Code § 81053.
Reference: Education Code §§ 81052, 81053, and 81130 through 81147.

CHAPTER 33
SAFEGUARDS DURING CONSTRUCTION

PROPOSED ADOPTION	DSA-SS	DSA-SS/CC	Comments
Adopt entire chapter	X	X	

Adopt entire chapter with amendments listed below			
Adopt only those sections listed below			

Notation for [DSA-SS]
Authority: Education Code § 17310 and 81142, and H&S Code §16022.
Reference: Education Code §§ 17280 through 17317, and 81130 through 81147, and Health and Safety Code §§16000 through 16023.

Notation for [DSA-SS/CC]
Authority: Education Code § 81053.
Reference: Education Code §§ 81052, 81053, and 81130 through 81147.

~~CHAPTER 34~~

~~EXISTING STRUCTURES~~

~~SECTION 3401~~

~~GENERAL~~

~~...~~

~~[Relocated to Section 301.1, Part 10, Title 24, C.C.R.]~~

~~***3401.1.1 Existing state-owned structures.*** *The provisions of Sections 3417 through 3422 establish minimum standards for earthquake evaluation and design for retrofit of existing state-owned structures, including buildings owned by the University of California and the California State University.*~~

~~*The provisions of Sections 3417 through 3422 may be adopted by a local jurisdiction for earthquake evaluation and design for retrofit of existing buildings.*~~

~~***3401.1.2 Public school buildings. [DSA-SS]*** *The provisions of Sections 3417 through 3423 establish minimum standards for earthquake evaluation and design for the rehabilitation of existing buildings for use as public school buildings under the jurisdiction of the Division of the State Architect-Structural Safety (DSA-SS, refer to Section 1.9.2.1) where required by Sections 4-307 and 4-309(c) of the California Administrative Code.*~~

~~*The provisions of Section 3417 through 3423 also establish minimum standards for earthquake evaluation and design for rehabilitation of existing public school buildings currently under the jurisdiction of DSA-SS.*~~

~~***3401.1.3 Community college buildings. [DSA-SS/CC]*** *The provisions of Sections 3417 through 3423 establish minimum standards for earthquake evaluation and design for the rehabilitation of existing buildings for use as community college buildings under the jurisdiction of the Division of the State Architect-Structural Safety/Community Colleges (DSA-SS/CC, refer to Section 1.9.2.2) where required by Sections 4-307 and 4-309(c) of the California Administrative Code.*~~

~~*The provisions of Section 3417 through 3423 also establish minimum standards for earthquake*~~

~~evaluation and design for rehabilitation of existing community college buildings currently under the jurisdiction of DSA-SS/CC.~~

...

~~(Relocated to Sections 317 through 323, Part 10, Title 24, C.C.R.)~~

~~SECTION 3417~~
~~EARTHQUAKE EVALUATION AND DESIGN FOR RETROFIT OF EXISTING BUILDINGS~~

~~**3417.1 Purpose.**~~

....

~~**3417.1.2 Public school buildings.** The provisions of Sections 3417 through 3423 establish minimum standards for earthquake evaluation and design for the rehabilitation of existing buildings for use as public school buildings under the jurisdiction of the Division of the State Architect-Structural Safety (DSA-SS), refer to Section 1.9.2.1.~~

~~The provisions of Section 3417 through 3423 also establish minimum standards for earthquake evaluation and design for rehabilitation of existing public buildings currently under the jurisdiction of DSA-SS.~~

~~**3417.1.2.1 Reference to other chapters.** For public schools, where reference within this chapter is made to sections in Chapters 16, 17, 18, 19, 21 or 22, the provisions in Chapters 16A, 17A, 18A, 19A, 21A and 22A respectively shall apply instead.~~

~~**3417.1.3 Community college buildings.** The provisions of Sections 3417 through 3423 establish minimum standards for earthquake evaluation and design for the rehabilitation of existing buildings for use as community college buildings under the jurisdiction of the Division of the State Architect-Structural Safety/Community Colleges (DSA-SS/CC), refer to Section 1.9.2.2.~~

~~The provisions of Section 3417 through 3423 also establish minimum standards for earthquake evaluation and design for rehabilitation of existing community college buildings currently under the jurisdiction of DSA-SS/CC.~~

~~**3417.1.3.1 Reference to other chapters.** For community colleges, where reference within this chapter is made to sections in Chapters 17 or 18, the provisions in Chapters 17A and 18A respectively shall apply instead.~~

~~**3417.2 Scope.** All modifications, structurally connected additions and/or repairs to existing structures or portions thereof shall, at a minimum, be designed and constructed to resist the effects of seismic ground motions as provided in this section. The structural system shall be evaluated by a registered design professional and, if not meeting or exceeding the minimum seismic design performance requirements of this section, shall be retrofitted in compliance with these requirements.~~

~~**Exception:** Those structures for which Section 3417.3 determines that assessment is not required, or for which Section 3417.4 determines that retrofit is not needed, then only the requirements of Section 3417.11 apply.~~

~~**3417.3 Applicability.**~~

...

~~**3417.3.2 Public school buildings.** For public schools, the provisions of Section 3417 apply when required in accordance with Sections 4-307 and 4-309(c), Title 24, Part 1.~~

~~**3417.3.3 Community college buildings.** For community colleges, the provisions of Section 3417 apply when required in accordance with Sections 4-307 and 4-309(c), Title 24, Part 1.~~

~~**3417.4 Evaluation required.** If the criteria in Section 3417.3 apply to the project under consideration, the design professional of record shall provide an evaluation in accordance with Section 3417 to determine the seismic performance of the building in its current configuration and condition. If the structure's seismic performance as required by Section 3417.5 is evaluated as satisfactory and the peer reviewer(s), when Method B of Section 3421 is used, concur, then no structural retrofit is required.~~

~~**3417.5 Minimum seismic design performance levels for structural and nonstructural components.** Following the notations of ASCE 41, the seismic requirements for design and assessment are based upon a prescribed Earthquake Hazard Level (BSE-1, BSE-2, BSE-R or BSE-C), a specified structural performance level (S-1 through S-5) and a non-structural performance level (N-A through N-E). The minimum seismic performance criteria are given in Table 3417.5 according to the Building Regulatory Authority and the Risk Category as determined in Chapter 16, or by the regulatory authority. The building shall be evaluated at both the Level 1 and Level 2 performance levels, and the more restrictive requirements shall apply.~~

~~Basic Safety Earthquake 2 (BSE-2) in ASCE 41 shall be same as Risk-Targeted Maximum Considered Earthquake (MCE_R) in ASCE 7. Probabilistic response spectra defining other Earthquake Hazard Levels shall be developed using site-specific ground motions in accordance with ASCE 7 Section 21.2 utilizing the Next Generation Attenuation (NGA) relations used for the 2008 USGS seismic hazards maps for Western United States (WUS). When supported by data and analysis, other NGA relations, that were not used for the 2008 USGS maps, shall be permitted as additions or substitutions. No fewer than three NGA relations shall be utilized. Response spectra shall incorporate the risk coefficient C_R per ASCE 7 Section 21.2.1.1.~~

~~Ground motion response history analysis shall be as set forth in ASCE 7 Chapter 16, Section 17.3 or Section 18.2.3.~~

~~**Exception:** If the floor area of an addition is greater than the larger of 50 per cent of the floor area of the original building or 1,000 square feet (93 m^2), then the Table 3417.5 entries for BSE-R and BSE-C are replaced by BSE-1 and BSE-2, respectively.~~

~~**3417.6 Retrofit required.** Where the evaluation indicates the building does not meet the required performance objectives of this section, the owner shall take appropriate steps to ensure that the building's structural system is retrofitted in accordance with the provisions of Section 3417. Appropriate steps are either: 1) undertake the seismic retrofit as part of the additions, modifications and/or repairs of the structure; or 2) provide a plan, acceptable to the building official, to complete the seismic retrofit in a timely manner. The relocation or moving of an existing building is considered to be an alteration requiring filing of the plans and specifications approved by the building official.~~

~~**3417.7** The additions, modification or repair to any existing building are permitted to be prepared in accordance with the requirements for a new building, Chapter 16, Part 2, Title 24, C.C.R., 2007 edition, applied to the entire building.~~

~~**3417.8** The requirements of ASCE 41 Chapter 9 are to apply to the use of seismic isolation or passive energy systems for the repair, modification or retrofit of an existing structure. When seismic isolation or passive energy dissipation is used, the project must have project peer review as prescribed in Section 3422.~~

~~**3417.9** Any construction required by this chapter shall include structural observation by the registered design professional who is responsible for the structural design in accordance with Section 3419.10.~~

~~**3417.10** Where Method B of Section 3421 is used or is required by Section 3419.7, the proposed method of building evaluation and design procedures must be accepted by the building official prior to the commencement of the work.~~

~~**3417.11 Voluntary lateral-force-resisting system modifications.** Where the exception of Section 3417.2 applies, modifications of existing structural components and additions of new structural components that are initiated for the purpose of improving the seismic performance of an existing structure and that are not required by other portions of this chapter are permitted under the requirements of Section 3419.12.~~

~~SECTION 3418~~
~~DEFINITIONS~~

~~**3418.1.** In addition to the definitions given in Section 3402, for the purposes of Sections 3417 through 3423, certain terms are defined as follows:~~
~~**ADDITION** means any work that increases the floor or roof area or the volume of enclosed space of an existing building, and is structurally attached to the existing building by connections that are required for transmitting vertical or horizontal loads between the addition and the existing structure.~~

~~**ALTERATION** means any change within or to an existing building, which does not increase and may decrease the floor or roof area or the volume of enclosed space.~~
~~**BSE-C RESPONSE ACCELERATION PARAMETERS** are the parameters (S_{XS} and S_{X1} taken from 5-percent /50-year maximum direction spectral response acceleration curves or by a Site Specific Response Spectrum developed in accordance with Section 3417.5. Values for BSE-C need not be greater than those for BSE-2.~~
~~**BSE-R RESPONSE ACCELERATION PARAMETERS** are the parameters (S_{XS} and S_{X1}) taken from 20-percent /50-year maximum direction spectral response acceleration curves or by a Site Specific Response Spectrum developed in accordance with Section 3417.5. Values for BSE-R need not be greater than those for BSE-1.~~

~~**BUILDING OFFICIAL** is that individual within the agency or organization charged with responsibility for compliance with the requirements of this code. For some agencies this person is termed the "enforcement agent."~~

~~**DESIGN** is the procedure that includes both the evaluation and retrofit design of an existing component, element or structural system, and design of a new component, element or structural system.~~

~~**ENFORCEMENT AGENCY (Authority Having Jurisdiction in ASCE 41)** is the agency or organization charged with responsibility for agency or organization compliance with the requirements of this code.~~

~~**METHOD A** refers to the procedures prescribed in Section 3420.~~

~~**METHOD B** refers to the procedures allowed in Section 3421.~~

~~**MODIFICATIONS.** For this chapter, modification is taken to include repairs to structures that have been damaged.~~

~~**N-A, N-B, N-C, N-D, N-E** are seismic nonstructural component performance measures as defined in ASCE 41. N-A corresponds to the highest performance level, and N-D the lowest, while N-E is not considered.~~

~~**PEER REVIEW** refers to the procedures contained in Section 3422.~~

~~**REPAIR** as used in this chapter means the design and construction work undertaken to restore or enhance the structural and nonstructural load-resisting system participating in the lateral response and stability of a structure that has experienced damage from earthquakes or other destructive events.~~

~~**S-1, S-2, S-3, S-4, S-5, S-6** are seismic structural performance measures as defined in ASCE 41. S-1 corresponds to the highest performance level, and S-5 the lowest, while S-6 is not considered.~~

~~**SPECIFIC PROCEDURES** are the procedures listed in Section 3419.1.1.~~

~~**STRUCTURAL REPAIRS** are any changes affecting existing or requiring new structural components primarily intended to correct the effects of damage, deterioration or impending or actual failure, regardless of cause.~~

~~**TABLE 3417.5 SEISMIC PERFORMANCE REQUIREMENTS BY BUILDING REGULATORY AUTHORITY AND RISK CATEGORY. ALL BUILDINGS NOT REGULATED BY DSA ARE ASSIGNED AS "STATE-OWNED."**~~

		PERFORMANCE CRITERIA	
Building Regulatory Authority	Risk Category	Level 1	Level 2
State-Owned	I, II, III	BSE-R, S-3, N-D	BSE-C, S-5, N-E
State-Owned	IV	BSE-R, S-2, N-B	BSE-C, S-4, N-C
Division of the State Architect - Public schools	I	BSE-1,S-3,N-C	BSE-2,S-5, N-E
Division of the State Architect - Public schools	II, III	BSE-1, S-2, N-C	BSE-2, S-4, N-D
Division of the State Architect - Public schools	IV	BSE-1, S-2, N-C	BSE-2, S-4,N-C
Division of the State Architect - Community college	I, II, III	BSE-R, S-3, N-D	BSE-2, S-5, N-E
Division of the State Architect - Community college	IV	BSE-R, S-2, N-B	BSE-2, S-4, N-C

~~1. ASCE 41 provides acceptance criteria (e.g. m, rotation) for Immediate Occupancy (S1), Life Safety (S3), and Collapse Prevention (S5), and specifies that values for S-2 and S-4 are to be determined by interpolation between the adjacent performance level values.~~

~~The required method of interpolation is as follows:~~

~~For level S-2, the acceptance value is $^{1}/_{3}$ of the sum of the tabulated value for Immediate Occupancy (IO level) and twice the tabulated value for the Life Safety (LS level).~~

~~For level S-4, the acceptance value is one half the sum of the value for the LS level and the value for the Collapse Prevention (CP) level.~~

~~For nonstructural components, N-A corresponds to the IO level, N-C to the LS level, and N-D to the Hazards Reduced (HR level).~~

~~For evaluation procedures, N-B shall be the same as for N-A. Where numerical values are used, the values for N-B are one half the sum of the appropriate IO and LS values. Where IO or CP values are not given by ASCE 41, then the LS values are permitted to be substituted.~~

~~2. Buildings evaluated and retrofitted to meet the requirements for a new building, Chapter 16, Part 2, Title 24, in accordance with the exception in Section 3419.1, are deemed to meet the seismic performance requirements of this section.~~

~~SECTION 3419~~
~~SEISMIC CRITERIA SELECTION FOR EXISTING BUILDINGS~~

~~**3419.1 Basis for evaluation and design.** This section determines what technical approach is to be used for the seismic evaluation and design for existing buildings. For those buildings or portions of buildings for which Section 3417 requires action, the procedures and limitations for the evaluation of existing buildings and design of retrofit systems and/or repair thereof shall be implemented in accordance with this section.~~

~~One of the following approaches must be used:~~

~~1. Method A of Section 3420;~~

~~2. Method B of Section 3421, with independent review of a peer reviewer as required in Section 3422; or~~

~~3. For state-owned buildings only, the use of one of the specific procedures listed in Section 3419.1.1.~~

~~When Method B is chosen it must be approved by the building official, and, where applicable, by the peer reviewer. All referenced standards in ASCE 41 shall be replaced by referenced standards listed in Chapter 35 of this code.~~

~~**Exceptions:**~~

~~1. Reserved for BSC~~

~~2. **[DSA-SS & DSA-SS/CC]** For public schools and community colleges constructed to the requirements of California Building Code, 2007 or later edition, that code is permitted to be used in place of those specified in Section 3419.1 provided the building complies with Seismic Design Category D or higher.~~

~~**3419.1.1 Specific procedures.** For state-owned buildings, the following specific procedures taken from the International Existing Building Code (IEBC) Appendix A may be used, without peer review, for their respective types of construction to comply with the seismic performance requirements for Risk Category I, II or III buildings:~~

~~1. Seismic Strengthening Provisions for Unreinforced Masonry Bearing Wall Buildings (Chapter A1 of the IEBC).~~

~~2. Prescriptive Provisions for Seismic Strengthening of Cripple Walls and Sill Plate Anchorage of Light Wood-Frame, Residential Buildings (Chapter A3 of the IEBC).~~

~~3. Earthquake Hazard Reduction in Existing Reinforced Concrete and Reinforced Masonry Wall Buildings with Flexible Diaphragms (Chapter A2 of the IEBC).~~

~~**3419.1.2** When a design project is begun under Method B the selection of the peer reviewer is subject to the approval of the building official. Following approval by the peer reviewer, the seismic criteria for the project and the planned evaluation provisions must be approved by the building official. The approved seismic criteria and evaluation provisions shall apply. Upon approval of the building official these are permitted to be modified.~~

~~**3419.1.3** For state-owned and community college buildings, where unreinforced masonry is not bearing, it may be used only to resist applied lateral loads. Where unreinforced masonry walls are part of the structure they must be assessed for stability under the applicable nonstructural evaluation procedure.~~

~~**3419.1.4 Public schools.** For public schools, unreinforced masonry shall not be used to resist in-plane or out-of-plane seismic forces or superimposed gravity loads.~~

~~**3419.1.5 Public schools.** For public schools of light frame construction, horizontal diaphragms and vertical shear walls shall consist of either diagonal lumber sheathing or structural panel sheathing. Braced horizontal diaphragms may be acceptable when approved by DSA. Straight lumber sheathing may be used in combination with diagonal or structural panel sheathing as diaphragms or shear walls. Let-in bracing, plaster (stucco), hollow clay tile, gypsum wallboard and particleboard sheathing shall not be assumed to resist seismic forces.~~

~~**3419.2 Existing conditions.** The existing condition and properties of the entire structure must be determined and documented by thorough inspection of the structure and site, review of all available related construction documents, review of geotechnical and engineering geologic reports, and performance of necessary testing and investigation. Where samples from the existing structure are taken or in situ tests are performed, they shall be selected and interpreted in a statistically appropriate manner to ensure that the properties determined and used in the evaluation or design are representative of the conditions and structural circumstances likely to be encountered in the structure as a whole. Adjacent structures or site features that may affect the retrofit design shall be identified.~~

~~The entire load path of the seismic force-resisting system shall be determined, documented and evaluated. The load path includes all the horizontal and vertical elements participating in the structural response: such as diaphragms, diaphragm chords, diaphragm collectors, vertical elements such as walls frames, braces; foundations and the connections between the components and elements of the load path. Repaired or retrofitted elements and the standards under which the work was constructed shall be identified.~~

~~Data collection in accordance with ASCE 41 Section 2.2 shall meet the following minimum levels:~~

~~1. For state owned buildings, the requirements shall be met following the data collection requirements of ASCE 41, Section 2.2.~~

~~2. For public schools and community college buildings constructed in conformance with the Field Act, the "Usual" level as defined in ASCE 41, Section 2.2.6.2.~~

~~3. For public schools and community college buildings not constructed in conformance with the Field Act, the "Comprehensive" level as defined in ASCE 41, Section 2.2.6.3.~~

~~Concrete material requirements and testing for public school and community college buildings shall also comply with Sections 1914A and 1913.5, respectively.~~

~~Qualified test data from the original construction may be accepted, in part or in whole, by the enforcement agency to fulfill the data collection requirements.~~

~~**Exceptions:**~~

~~1. The number of samples for data collection may be adjusted with approval of the enforcement agency when it has been determined that adequate information has been obtained or additional information is required.~~

~~2. Welded steel moment frame connections of buildings that may have experienced potentially damaging ground motions shall be inspected in accordance with Chapters 3 and 4, FEMA 352, Recommended Post Earthquake Evaluation and Repair Criteria for Welded Moment-Frame Construction for Seismic Applications (July 2000).~~

~~Where original building plans and specifications are not available, "as-built" plans shall be prepared that depict the existing vertical and lateral structural systems, exterior elements, foundations and nonstructural systems in sufficient detail to complete the design.~~

~~*Data collection shall be directed and observed by the project structural engineer or design professional in charge of the design.*~~

~~***3419.3 Site geology and soil characteristics.*** *Soil profile shall be assigned in accordance with the requirements of Chapter 18.*~~

~~***3419.4 Risk categories.*** *For purposes of earthquake-resistant design, each structure shall be placed in one of the risk categories in accordance with the requirements of this code.*~~

~~***3419.5 Configuration requirements.*** *Each structure shall be designated structurally regular or irregular in accordance with the requirements of ASCE 41, Sections 2.4.1.1.1. to 2.4.1.1.4.*~~

~~***3419.6 General selection of the design method.*** *The requirements of Method B (Section 3421) may be used for any existing building.*~~

~~***3419.7 Prescriptive selection of the design method.*** *The requirements of Method A (Section 3420) or the specific procedures for applicable building types given in Section 3419.1.1 are permitted to be used except under the following conditions, where the requirements of Method B (Section 3421) must be used.*~~

~~***3419.7.1*** *When the building contains prestressed or post- tensioned structural components (beams, columns, walls or slabs) or contains precast structural components (beams, columns, walls or flooring systems).*~~

~~***3419.7.2*** *When the building is classified as irregular in vertical or horizontal plan by application of ASCE/SEI 7 Section 12.3 and/or ASCE 41, Sections 2.4.1.1.1 to 2.4.1.1.4, unless the irregularity is demonstrated not to affect the seismic performance of the building.*~~

~~***Exception:*** *If the retrofit design removes the configurational attributes that caused the building to be classified as irregular, then Section 3419.7.2 does not apply and Method A may be used.*~~

~~***3419.7.3*** *For any building that is assigned to Risk Category IV.*~~

~~***3419.7.4*** *For any building using undefined or hybrid structural systems.*~~

~~***3419.7.5*** *When seismic isolation or energy dissipation systems are used in the retrofit or repair, either as part of the existing structure or as part of the modifications.*~~

~~***3419.7.6*** *When the height of the structure exceeds 240 feet (73 152 mm).*~~

~~***3419.8 Strength requirements.*** *All components of the lateral-force-resisting system must have the strength to meet the acceptance criteria prescribed in ASCE 41, Chapter 3, or as prescribed in the applicable Appendix A chapter of the IEBC if a specific procedure in Section 3419.1.1 is used. Any component not having this strength shall have its capacity increased by modifying or supplementing its strength so that it exceeds the demand, or the demand is reduced to less than the existing strength by making other modifications to the structural system.*~~

~~***Exception:*** *A component's strength is permitted to be less than that required by the specified seismic load combinations if it can be demonstrated that the associated reduction in seismic performance of the component or its removal due to the failure does not result in a structural system that does not comply with the required performance objectives of Section 3417. If this exception is taken for a component, then it cannot be considered part of the primary lateral load- resisting system.*~~

~~***3419.9 Nonstructural component requirements.*** *Where the nonstructural performance levels required by Section 3417, Table 3417.5 are N-D or higher, mechanical, electrical and plumbing components shall comply with the provisions of ASCE 41, Chapter 11, Section 11.2.*~~

~~**Exception:** Modifications to the procedures and criteria may be made subject to approval by the building official, and concurrence of the peer reviewer if applicable. All reports and correspondence shall also be forwarded to the building official.~~

~~**3419.10 Structural observation, testing and inspection.** Structural, geotechnical and construction observation, testing and inspection as used in this section shall mean meeting the requirements of Chapter 17, with a minimum allowable level of investigation corresponding to seismic design category (SDC) D. At a minimum the project site will be visited by the responsible design professional to observe existing conditions and to review the construction work for general compliance with approved plans, specifications and applicable structural regulations. Such visits shall occur at significant construction stages and at the completion of the structural retrofit. Structural observation shall be provided for all structures. The plan for testing and inspection shall be submitted to the building official for review and approval with the application for permit.~~

~~**Additional requirements:** For public schools and community colleges, construction material testing, inspection and observation during construction shall also comply with Section 4-333, Part 1, Title 24.~~

~~**3419.10.1** The registered design professional, or their designee, responsible for the structural design shall be retained to perform structural observation and independently report to the owner of observations and findings as they relate to adherence to the permitted plans and good workmanship.~~

~~**3419.10.2** At the conclusion of construction, the structural observer shall submit to the enforcement agency and the owner a final written statement that the required site visits have been made, that the work, to the best of the structural observers knowledge and belief, is or is not in general conformity to the approved plans and that the observed structural deficiencies have been resolved and/or listing those that, to the best of the structural observers knowledge and belief, have not been satisfactorily corrected.~~

~~**3419.10.2.1** The requirement for structural observation shall be noted and prominently displayed on the front sheet of the approved plans and incorporated into the general notes on the approved plans.~~

~~**3419.10.2.2 Preconstruction meeting.** A preconstruction meeting is mandatory for all projects which require structural observation. The meeting shall include, but is not limited to, the registered design professional, structural observer, general constructor, affected subcontractors, the project inspector and a representative of the enforcement agency (designated alternates may attend if approved by the structural observer). The structural observer shall schedule and coordinate this meeting. The purpose of the meeting is to identify and clarify all essential structural components and connections that affect the lateral and vertical load systems and to review scheduling of the required observations for the project's structural system retrofit.~~

~~**3419.11 Temporary actions.** When compatible with the building use, and the time phasing for both use and the retrofit program, temporary shoring or other structural support is permitted to be considered. Temporary bracing, shoring and prevention of falling hazards are permitted to be used to qualify for Exception 1 in Section 3419.12 that allows inadequate capability in some existing components, as long as the required performance levels given in Section 3417 can be provided by the permanent structure. The consideration for such temporary actions shall be noted in the design documents.~~

~~**3419.12 Voluntary modifications to the lateral-force resisting system.** Where modifications of existing structural components and additions of new structural components are initiated for the purpose of improving the lateral force resisting strength or stiffness of an existing structure and they are not required by other sections of this code, then they are permitted to be designed to meet an approved seismic performance criteria provided that an engineering analysis is submitted that follows:~~

~~1. The capacity of existing structural components required to resist forces is not reduced, unless it can be demonstrated that reduced capacity meets the requirements of Section 3419.8.~~

~~2. The lateral loading to or strength requirement of existing structural components is not increased beyond their capacity.~~

~~3. New structural components are detailed and connected to the existing structural components as required by this code for new construction.~~

~~4. New or relocated nonstructural components are detailed and connected to existing or new structural components as required by this code for new construction.~~

~~5. A dangerous condition is not created.~~

~~**3419.12.1 State-owned buildings.** Voluntary modifications to lateral-force-resisting systems conducted in accordance with Appendix A of the IEBC and the referenced standards of this code shall be permitted.~~

~~**3419.12.1.1 Design documents.** When Section 3419.12 is the basis for structural modifications, the approved design documents must clearly state the scope of the seismic modifications and the accepted criteria for the design. The approved design documents must clearly have the phrase "The seismic requirements of Chapter 34 for existing buildings have not been checked to determine if these structural modifications meet CBC requirements; the modifications proposed are to a different seismic performance standard than would be required in Section 3419 if they were not voluntary as allowed in Section 3419.12."~~

~~**3419.12.2 Public schools and community colleges.** When Section 3419.12 is the basis for structural modifications, the approved design documents must clearly indicate the scope of modifications and the acceptance criteria for the design.~~

~~SECTION 3420~~
~~METHOD A~~

~~**3420.1 General.** The retrofit design shall employ the Linear Static or Linear Dynamic Procedures of ASCE 41, Section 3.3.1 or 3.3.2, and comply with the applicable general requirements of ASCE 41, Chapters 2 and 3. The earthquake hazard level and performance level given specified in Section 3417.5 for the building's risk category shall be used. Structures shall be designed for seismic forces coming from any horizontal direction.~~

~~**Exception:** The ASCE 41 Simplified Rehabilitation Method of Chapter 10 may be used if the Level 1 seismic performance level is S-3 or lower, the building's structural system is one of the primary building types described in ASCE 41, Table 10-2, and ASCE 41, Table 10-1 permits it use for the building height.~~

~~SECTION 3421~~
~~METHOD B~~

~~**3421.1** The existing or retrofitted structure shall be demonstrated to have the capability to sustain the deformation response due to the specified earthquake ground motions and meet the seismic performance requirements of Section 3417. The registered design professional shall provide an evaluation of the response of the existing structure in its modified configuration and condition to the ground motions specified. If the building's seismic performance is evaluated as satisfactory and the peer reviewer(s,) and the enforcement agency concurs, then no further structural modifications of the lateral-load-resisting system are required.~~

~~When the evaluation indicates the building does not meet the required performance levels given in Table 3417.5 for the risk category, then a retrofit and/or repair design shall be prepared that provides a structure that meets these performance objectives and reflects the appropriate consideration of existing conditions. Any approach to analysis and design is permitted to be used, provided that the approach shall be rational,~~

~~shall be consistent with the established principals of mechanics and shall use the known performance characteristics of materials and assemblages under reversing loads typical of severe earthquake ground motions.~~

~~**Exception:** Further consideration of the structure's seismic performance may be waived by the enforcement agency if both the registered design professional and peer reviewer(s) conclude that the structural system can be expected to perform at least as well as required by the provisions of this section without completing an analysis of the structure's compliance with these requirements. A detailed report shall be submitted to the responsible building official that presents the reasons and basis for this conclusion. This report shall be prepared by the registered design professional. The peer reviewer(s) shall concur in this conclusion and affirm to it in writing. The building official shall either approve this decision or require completion of the indicated work specified in this section prior to approval.~~

~~**3421.2** The approach, models, analysis procedures, assumptions on material and system behavior and conclusions shall be peer reviewed in accordance with the requirements of Section 3422 and accepted by the peer reviewer(s).~~

~~**Exceptions:**~~

~~1. The enforcement agency may perform the work of peer review when qualified staff is available within the jurisdiction.~~
~~2. The enforcement agency may modify or waive the requirements for peer review when appropriate.~~

~~**3421.2.1** The approach used in the development of the design shall be acceptable to the peer reviewer and the enforcement agency and shall be the same method as used in the evaluation of the building. Approaches that are specifically tailored to the type of building, construction materials and specific building characteristics may be used, if they are acceptable to the independent peer reviewer. The use of Method A allowed procedures may also be used under Method B.~~

~~**3421.2.2** Any method of analysis may be used, subject to acceptance by the peer reviewer(s) and the building official. The general requirements given in ASCE 41, Chapter 2, shall be complied with unless exceptions are accepted by the peer reviewer(s) and building official. Use of other than ASCE 41 procedures in Method B requires building official concurrence before implementation.~~

~~**3421.2.3** Prior to implementation, the procedures, methods, material assumptions and acceptance/rejection criteria proposed by the registered design professional will be peer reviewed as provided in Section 3422. Where nonlinear procedures are used, prior to any analysis, the representation of the seismic ground motion shall be reviewed and approved by the peer reviewer(s) and the building official.~~

~~**3421.2.4** The conclusions and design decisions shall be reviewed and accepted by the peer reviewer(s) and the building official.~~

~~SECTION 3422~~
~~PEER REVIEW REQUIREMENTS~~

~~**3422.1 General.** Independent peer review is an objective, technical review by knowledgeable reviewer(s) experienced in the structural design, analysis and performance issues involved. The reviewer(s) shall examine the available information on the condition of the building, the basic engineering concepts employed and the recommendations for action.~~

~~**3422.3 Qualifications and terms of employment.** The reviewer(s) shall be independent from the design and construction team.~~

~~**3422.3.1** The reviewer(s) shall have no other involvement in the project before, during or after the review, except in a review capacity.~~

~~**3422.3.2** The reviewer(s) shall be selected and paid by the owner and shall have technical expertise in the evaluation and retrofit of buildings similar to the one being reviewed, as determined by the enforcement agency.~~

~~**3422.3.3** The reviewer (or in the case of review teams, the chair) shall be a California licensed structural engineer who is familiar with the technical issues and regulations governing the work to be reviewed.~~

~~**Exception:** Other individuals with acceptable qualifications and experience may be a peer reviewer(s) with the approval of the building official.~~

~~**3422.3.4** The reviewer shall serve through completion of the project and shall not be terminated except for failure to perform the duties specified herein. Such termination shall be in writing with copies to the enforcement agency, owner and the registered design professional. When a reviewer is terminated or resigns, a qualified replacement shall be appointed within 10 working days, and the reviewer shall submit copies of all reports, notes and correspondence to the responsible building official, the owner and the registered design professional within 10 working days of such termination.~~

~~**3422.3.5** The peer reviewer shall have access in a timely manner to all documents, materials and information deemed necessary by the peer reviewer to complete the peer review.~~

~~**3422.4 Scope of review.** Review activities shall include, where appropriate, available construction documents, design criteria and representative observations of the condition of the structure, all inspection and testing reports, including methods of sampling, analytical models and analyses prepared by the registered design professional and consultants, and the retrofit or repair design. Review shall include consideration of the proposed design approach, methods, materials, details and constructability. Changes observed during construction that affect the seismic resisting system shall be reported to the reviewer in writing for review and recommendation.~~

~~**3422.5 Reports.** The reviewer(s) shall prepare a written report to the owner and building official that covers all aspects of the review performed, including conclusions reached by the reviewer(s). Reports shall be issued after the schematic phase, during design development, and at the completion of construction documents but prior to submittal of the project plans to the enforcement agency for plan review. When acceptable to the building official, the requirement for a report during a specific phase of the project development may be waived.~~

~~Such reports should include, at the minimum, statements of the following:~~

~~1. Scope of engineering design peer review with limitations defined.~~

~~2. The status of the project documents at each review stage.~~

~~3. Ability of selected materials and framing systems to meet performance criteria with given loads and configuration.~~

~~4. Degree of structural system redundancy and the deformation compatibility among structural and nonstructural components.~~

~~5. Basic constructability of the retrofit or repair system.~~

~~6. Other recommendations that would be appropriate to the specific project.~~

~~7. Presentation of the conclusions of the reviewer identifying any areas that need further review, investigation and/or clarification.~~

~~8. Recommendations.~~

~~The last report prepared prior to submittal of permit documents to the enforcement agency shall include a statement indicating that the design is in conformance with the approved evaluation and design criteria~~

~~**3422.6 Response and resolutions.** The registered design professional shall review the report from the reviewer(s) and shall develop corrective actions and responses as appropriate. Changes observed during construction that affect the seismic-resisting system shall be reported to the reviewer in writing for review and recommendations. All reports, responses and resolutions prepared pursuant to this section shall be submitted to the responsible enforcement agency and the owner along with other plans, specifications and calculations required. If the reviewer resigns or is terminated prior to completion of the project, then the reviewer shall submit copies of all reports, notes and correspondence to the responsible building official, the owner and the registered design professional within 10 working days of such termination.~~

~~**3422.7 Resolution of conflicts.** When the conclusions and recommendations of the peer reviewer conflict with the registered design professional's proposed design, the enforcement agency shall make the final determination of the requirement for the design.~~

~~SECTION 3423~~
~~ADDITIONAL REQUIREMENTS FOR PUBLIC SCHOOLS AND COMMUNITY COLLEGES~~

~~The requirements of Section 3423 apply only to public schools under the jurisdiction of the Division of the State Architect-Structural Safety (DSA-SS, refer to Section 1.9.2.1) and community colleges under the jurisdiction of the Division of the State Architect-Structural Safety/Community Colleges (DSA-SS/CC). Refer to Section 1.9.2.2.~~

~~**3423.1 Evaluation and design criteria report.** During the schematic phase of the project, the owner or the registered design professional in charge of the design shall prepare and sign an Evaluation and Design Criteria Report in accordance with Part 1, Title 24, C. C. R., Section 4-306 or 4-307(a). The report shall be submitted to the DSA for review and approval prior to proceeding with design development of the rehabilitation.~~

~~The Evaluation and Design Criteria Report shall:~~

1. ~~Identify the building(s) structural and nonstructural systems, potential deficiencies in the elements or systems and the proposed method for retrofit.~~
2. ~~Identify geological and site-related hazards.~~
3. ~~Propose the methodology for evaluation and retrofit design.~~
4. ~~Propose the complete program for data collection (Section 3419.2).~~
5. ~~Include existing or "as-built" building plans, reports and associated documents of the existing construction.~~

~~**3423.2 Rehabilitation involving only portions of structures.** Where only a portion(s) of a structure is to be rehabilitated, the public school or community college portion of the structure shall:~~

1. ~~Be seismically separated from the unrehabilitated portion in accordance with Chapter 16 of Part 2, Title 24, or the entire structure shall be rehabilitated in accordance with this Section. For structures in which the unrehabilitated portion is above or below the school or community college portion, the entire structure shall be rehabilitated in accordance with this division.~~
2. ~~Be retrofitted as necessary to protect the occupants from falling hazards of the unrehabilitated portion of the building, and:~~

~~3. Be retrofitted as necessary to protect required exitways being blocked by collapse or falling hazards of the unrehabilitated portion.~~

...

~~**Notation for [DSA-SS]**~~
~~**Authority:** Education Code § 17310 and 81142, and H&S Code §16022.~~
~~**Reference:** Education Code §§ 17280 through 17317, and 81130 through 81147, and Health and Safety Code §§16000 through 16023.~~

~~**Notation for [DSA-SS/CC]**~~
~~**Authority:** Education Code § 81053.~~
~~**Reference:** Education Code §§ 81052, 81053, and 81130 through 81147.~~

CHAPTER 35

REFERENCED STANDARDS

Adopt and/or codify chapter as amended below:

PROPOSED ADOPTION	DSA-SS	DSA-SS/CC	Comments
Adopt entire chapter	X	X	
Adopt entire chapter without amendments			
Adopt entire chapter with amendments listed below			
Adopt only those sections listed below			

~~*All existing California amendments that are not revised below shall continue without change.*~~

This chapter lists the standards that are referenced in various sections of this document. The standards are listed herein by the promulgating agency of the standard, the standard identification, the effective date and title, and the section or sections of this document that reference the standard. The application of the referenced standards shall be as specified in Section 102.4.

[DSA-SS, DSA-SS-CC] Reference to other chapters. *In addition to the code sections referenced, the standards listed in this chapter are applicable to the respective code sections in Chapters 16A, 17A, 18A, 19A, 21A~~,~~ and 22A. ~~, and 34A.~~*

...

AAMA	American Architectural Manufacturing Association 1827 Waldon Office Square, Suite 550 Schaumburg, IL 60173	
Standard reference number	Title	Referenced in code section number
. . .		
501.4-09	*Recommended Static Test Method for Evaluating Curtain Wall and Storefront Systems Subjected to Seismic and Wind Induced Interstory Drifts*	*2410.1*
501.6-09	*Recommended Dynamic Test Method For Determining The Seismic Drift Causing Glass Fallout From A Wall*	*2410.1*

ACI	American Concrete Institute 38800 Country Club Drive Farmington Hills, MI 48333-9094	
Standard reference number	Title	Referenced in code section number
. . .		
318-14	Building Code Requirements for Structural Concrete	*Table 1705A.2.1, Table 1705A.3, ~~1705A.2.2.1.2,~~ 1810A.3.10.4, 1903A, 1904A, 1905A, 1910A.5.4, 1909.2, 1909.3 ~~1913A.5, 1913A.7.2, 1913.2, 1913.3~~*
355.2-07	*Qualification of Post-Installed Mechanical Anchors in Concrete*	*1616A.1.19*
355.4-11	*Qualification of Post-Installed Adhesive*	*1616A.1.19*

	Anchors in Concrete	
440.2R-08	*Guide for the Design and Construction of Externally Bonded FRP Systems for Strengthening Concrete Structures*	*1911A.3 ~~1914A.3~~*
. . .		
503.7-07	*Specification for Crack Repair by Epoxy Injection.*	*1911A.2 ~~1914A.2~~*
506-05	*Guide to Shotcrete*	*~~1913.4.5,~~ 1908A.1 ~~1910A.1~~, 1908A.3 ~~1910A.3,~~ 1908A.12 ~~1910A.12,~~ 1911A.2, ~~1914A.2~~*
530-13	Building Code Requirements for Masonry Structures	*~~2114.10,~~ 2114.7, ~~2114.11,~~ 2114.8, 2107A.5, 2107A.6*
. . .		

. . .

AISC	American Institute of Steel Construction Construction One East Wacker Drive, Suite 700 Chicago, IL 60601-2001	
Standard reference number	Title	Referenced in code section number
341-10	Seismic Provisions for Structural Steel Buildings	*1705A.2.1, 2212.2, 2205A, 2206A*
358- 10	*Prequalified Connections for Special and Intermediate Steel Moment Frames for Seismic Applications including Supplements No. 1 & 2*	*2212.3, 2205A, 2206A.2*

360-10	Specifications for Structural Steel Buildings	*1705A.2.1, Table 1705A.2.1, ~~2206A.2~~, 2212.1.1, 2204A.4 ~~2204A.2.2~~, 2212A.1.2. 2212A.2.1*

AISI	American Iron and Steel Institute 1140 Connecticut Avenue, 705 Suite 705 Washington. DC 20036	
Standard reference number	Title	Referenced in code section number
S214-12	North American Standard for Cold-formed Steel Framing- Truss Design, 2012	*2211A.3, 2212.5.1.2*

. . .

ANSI	American National Standards Institute 25 West 43rd Street, Fourth Floor New York, NY 10036	
Standard reference number	Title	Referenced in code section number
A 190.1-12	Structural Glued Laminated Timber	*1705A.5.4*

. . .

APA	APA - Engineered Wood Association 7011 South 19th Tacoma, WA 98466	
Standard	Title	Referenced

reference number		in code section number
A 190.1-12	Structural Glued Laminated Timber	*1705A.5.4*

. . .

ASCE/SEI	American Society of Civil Engineers Structural Engineering Institute 1801 Alexander Bell Drive Reston, VA 20191-4400	
Standard reference number	Title	Referenced in code section number
5-13	Building Code Requirements for Masonry Structures	*~~2114.10,~~ 2114.7, ~~2114.11,~~ 2114.8,- 2107A.5, 2107A.6*
. . .		
7-10	Minimum Design Loads for Buildings and Other Structures including Supplement No. 1	*104.11, ~~202~~, ~~1509.7.1~~, 1510.7.1, 1616.2,1616.9, 1616.10,1603A.2 1613A, 1616A, 1803A.6, ~~1905A.1.21, 1913.3.8~~, ~~2114A.1, 2114.13~~, ~~2210A.2~~, ~~2212A.2.4~~, 2410.1.1, 2410.1.2,*
. . .		
19- ~~09~~*10*	Structural Application of Steel Cables for Buildings	*2208A.1, ~~2207.1, 2207.2~~*
. . .		
24 - ~~13~~ *14*	Flood Resistant Design and Construction	1203.4.2,1612.4, 1612.4, 1612.5, 1612A.5, 2702.1.7, 3001.2
. . .		
41- ~~06~~ 13	*Seismic Evaluation and Retrofit ~~Rehabilitation~~ of Existing Buildings ~~including Supplement No. 1~~*	*1603A.2, 1616A.1.30,*

49- *12* ~~07~~	Wind Tunnel Testing for Buildings and Other Structures	1609.1.1

. . .

ASTM	ASTM International 100 Barr Harbor Drive West Conshohocken, PA 19428-2959	
Standard reference number	Title	Referenced in code section number
. . .		
A 153/A 153M-09	Specification for Zinc Coating (Hot-dip) on Iron and Steel Hardware	*2304.10.1.1* ~~*2304.9.1.1*~~
. . .		
A 722/A722M-12	Specifications for Uncoated High-strength Steel Bar for Prestressing Concrete	*1812A.4.2* ~~*J106.2.4.2*~~, *1811A.4*
. . .		
A1064-13	*Standard Specification for Carbon steel wire and Welded Wire Reinforcement, Plain and Deformed, for Concrete*	*1903A.8*
. . .		
B 695-04 *(2009)*	Standard Specification for Coatings of Zinc Mechanically Deposited on Iron and Steel Strip for Building Construction	*2304.10.1.1* ~~*2304.9.1.1*~~
. . .		

C90-14~~13~~	Standard Specification for Load Bearing Concrete Masonry Units	2105A.2
...		
C 94/C94M-14a ~~13~~	Specifications for Ready Mix Concrete	1705A.3.3.1 ~~1705A.3.3~~
...		
C 150-12	Specification for Portland Cement	~~1903A,~~ 1910A ~~1913A,~~ ~~1916.1.2~~ ~~1913.2~~ 1909.2.4
...		
C 270-14a ~~12a~~	Specifications for Mortar for Unit Masonry	~~2114.2~~ 2105A.3
~~C 289-07~~	~~Standard Test Method for Potential Alkali-Silica Reactivity of Aggregates~~	~~1903A.3, 1913.2.3~~
...		
C 595-13	Specification for Blended Hydraulic Cement	~~1903A.6,~~ 1910A.1 ~~1913A.1,~~ ~~1913.2,~~1909.2.4
...		
C 618 – 12a ~~08a~~	Standard Specification for Coal Fly Ash and Raw or Calcined Natural Pozzolan for Use in Concrete	~~1903A.3,~~1910A.1 ~~1913A.1,~~ ~~1913.2,~~1909.2.4
...		
C 635/C 635M-13a	Specification for the Manufacture, Performance, and Testing of Metal Suspension Systems for Acoustical Tile and Lay-in Panel ceilings	1616.10.16, 1616A.1.21 ~~1616A.1.20~~
C 636/C 636M - 13 ~~08~~	Practice for Installation of Metal Ceiling Suspension Systems for Acoustical Tile and Lay-in Panels	1616.10.16,1616A.1.21 ~~1616A.1.20~~
...		

C 780-14	*Standard Test Method for Preconstruction and Construction Evaluation of Mortars for Plain and Reinforced Unit Masonry*	*2105A.3*
. . .		
C 989-13 ~~09~~	*Standard Specification for Slag Cement for Use in Concrete and Mortars*	*~~1903A.5~~, ~~1903A.6,~~ 1910A.1 ~~1913A.1~~, ~~1913.2,~~1909.2.4*
. . .		
C 1019-*13* ~~11~~	Test Method of Sampling and Testing Grout	*2105A.3 ~~2105A.2.2.1.4~~, 2114.6.1, ~~2114.9.1~~*
. . .		
C 1157/C 1157M-11	*ASTM Standard Performance Specification for Hydraulic Cement*	*1910A.1 ~~1913A.1~~, ~~1913.2.5,~~1909.2.4*
. . .		
~~C 1240-14 11~~	*~~Standard Specification for Silica Fume Used in Cementitious Mixtures~~*	*~~1903A.6~~*
C 1249-06a(2010)	*Standard Guide for Secondary Seal for Sealed Insulated Glass Units for Structural Sealant Glazing Applications*	*~~1903A.6,~~ 2410.1*
. . .		
~~C 1260-07~~	*~~Standard Test Method for Potential Alkali Reactivity of Aggregates (Mortar-Bar Method)~~*	*~~1903A.6~~, ~~2410.1.1~~*
. . .		
~~C 1293-08b~~	*~~Standard Test Method for Determination of Length Change of Concrete Due to Alkali-Silica Reaction~~*	*~~1903A.6, 1913.2.3~~*
. . .		

~~C 1314-07~~	~~Test Method for Compressive Strength of Masonry Prisms~~	~~2114.9.2.1~~
. . .		
C 1392-00(2014 ~~2009~~)	Standard Guide for Evaluating Failure of Structural Sealant Glazing	2410.1.3
C 1394-03 (2012 ~~2008~~)	Standard Guide for In-Situ Structural Silicone Glazing Evaluation	2410.1.3
. . .		
C 1401-1~~409a~~	Standard Guide for Structural Sealant Glazing	2410.1
. . .		
~~C1567-08~~	~~Standard Test Method for Determining the Potential Alkali-Silica Reactivity of the Combinations of Cementicious Materials and Aggregate (Accelerated Mortar-Bar Method)~~	~~1903A.6, 1913.2.3,~~
C1586-05(2011)	Standard Guide for Quality Assurance of Mortars	~~2114.9.1~~,2105A.3 ~~2105A.2.2.1.4~~
. . .		
D 1586 –11	Standard Test Method for Standard Penetration Test (SPT) and Split-Barrel Sampling of Soils	~~J112.2~~ 1813A
. . .		
~~D 3441-05~~	~~Standard Test Method for Mechanical Cone Penetration Tests of Soil~~	~~J112.2~~
D 5778-12	Standard Test Method for Electronic Friction Cone and Piezocone Penetration Testing of Soils	1813A
. . .		

D 3966-07 (2013)	*Standard Test Method for Piles Under Lateral Loads*	*1810A.3.3.2*
. . .		
E 580- 14 ~~11b~~	*Standard Practice for Installation of Ceiling Suspension Systems of Acoustical Tile and Lay-in Panels in Areas Subject to Earthquake Ground Motions*	*1616.10.16, 1616A.1.21 ~~1616A.1.20~~*
. . .		
F 606-14	*Standard Test Methods for Determining the Mechanical Properties of Externally and Internally Threaded Fasteners, Washers, Direct Tension Indicators, and Rivets*	*2213A.1*
. . .		

. . .

AWC	American Wood Council 222 Catoctin SE, Suite 201 Leesburg, VA 20175	
Standard reference number	Title	Referenced in code section number
. . .		
ANSI/AWC NDS-2015	National Design Specifications (NDS) for Wood Construction with 2012 Supplement *and addendum*	*1905A.1.8 ~~1905A.1.21~~...*

. . .

AWPA	American Wood Products Association P.O. Box 361784 Birmingham. AL 35236-1784	
. . .		
U1-14	USE CATEGORY SYSTEM: User Specification for Treated Wood Except Section 6, Commodity Specification H	*1812A.2 ~~...J106.2.2~~*

. . .

AWS	American Welding Society 550 N.W. LeJeune Road Miami, FL 33126	
Standard reference number	Title	Referenced in code section number
D1.1- 10	*Structural Welding Code-Steel*	*Table 1705A.2.1, 1705A.2.5 ~~1705A.2.2.5~~, 2212.6.2, 2213A.2*
D1.3-08	*Structural Welding Code-Sheet Steel*	*Table 1705A.2.1, 1705A.2.5 ~~1705A.2.2.1.1~~*
D1.4-11	Structural Welding Code – Reinforcing Steel	*Table 1705A.2.1, ~~1705.2.2.1.2~~, ~~2107A.3~~, ~~2107A.4~~*
D1.8-09	*Structural Welding Code – Seismic Supplement*	*1705A.2.5 ~~1705A.2.2.5~~*

QC1-07 ~~06~~	*Standard for AWS Certification of Welding Inspectors*	*1705A.2.5 ~~1705A.2.2.5~~*

. . .

FM	Factory Mutual Global Research Standards Laboratories Department 1301 Atwood Avenue, P.O. Box 7500 Johnston, RI 02919	
Standard reference number	Title	Referenced in code section number
ANSI/FM 1950-15 ~~10~~	*Approval Standard for Seismic Sway Braces for ~~Automatic Sprinkler Systems~~ Pipe, Tubing and Conduit*	*1705A.13.2 ~~1705A.12.3~~*
. . .		

. . .

ICC	International Code Council, Inc. 500 New Jersey Ave, NW 6th Floor Washington, DC 20001	
Standard reference number	Title	Referenced in code section number
. . .		
*ICC-ES AC 01-~~12~~ 15**	*Acceptance criteria for expansion anchors in Masonry elements*	*1616A.1.19*
*ICC-ES AC 58-~~12~~ 15**	*Acceptance criteria for Adhesive anchors in Masonry elements*	*1616A.1.19*
*ICC-ES AC 70-~~12~~ 15**	*Acceptance criteria for fasteners power-driven into Concrete, Steel and Masonry elements*	*1616A.1.20 ~~1908A.1.1~~*

*ICC-ES AC 106- ~~12~~ 15**	*Acceptance criteria for predrilled fasteners (screw anchors) in Masonry*	*1616A.1.19*
*ICC-ES AC 125- ~~12~~ 15**	*Acceptance criteria for Concrete, and Reinforced and Unreinforced Masonry strengthening using externally bonded Fiber-Reinforced Polymer (FRP) composite systems.*	*1911A.3 ~~1914.3~~*
*ICC-ES AC 156~~-12~~ 15**	*Acceptance criteria for Seismic Certification by Shake-Table Testing of Nonstructural Components*	*1705A.13.3 ~~1705A.12.4~~*
*ICC-ES AC 178- ~~12~~ 15**	*Acceptance criteria for inspection and verification of Concrete, and Reinforced and Unreinforced Masonry strengthening using Fiber-Reinforced Polymer (FRP) composite systems.*	*1911A.3 ~~1914A.3~~*
*ICC-ES AC 193- ~~12~~ 15**	*Acceptance criteria for mechanical anchors in Concrete elements*	*1616A.1.19, ~~1909A.11~~*
*ICC-ES AC 232- 15**	*Acceptance criteria for anchor channels in Concrete elements*	*1616A.1.19*
*ICC-ES AC 308- ~~12~~ 15**	*Acceptance criteria for post-installed adhesive anchors in Concrete elements*	*1616A.1.19*
*ICC-ES AC 358- ~~12~~ 15**	*Acceptance criteria for Helical foundation systems and devices*	*1810A.3.1.5.1*
*ICC-ES AC 446- 15**	*Acceptance criteria for headed cast-in specialty inserts in Concrete*	*1616A.1.19*

** Refers to International Building Code, ~~2012~~ 2015 as a reference standard.*

...

ISO	International Organization for Standardization ISO Central Secretariat 1 ch, de la Voie-Creuse, Case Postale 56 CH-1211 Geneva 20, Switzerland	

Standard reference number	Title	Referenced in code section number
. . .		
ISO 9001-08	*Quality management systems - Requirements*	*1705A.13.3* ~~*1705A.12.4*~~
. . .		

. . .

NFPA	National Fire Protection Association 1 Batterymarch Park Quincy, MA 02169-7471	
Standard reference number	Title	Referenced in code section number
. . .		
13-*16*~~13~~	Installation of Sprinkler Systems	~~*1616.9.5, 1616.10.17*~~

. . .

PCI	Precast Prestressed Concrete Institute 200 West Adams Street, Suite 2100 Chicago, IL 60606-5230	
Standard reference number	Title	Referenced in code section number
. . .		
MLN 128-01	Recommended Practice for Glass Fiber Reinforcement	~~*1913.2.1*~~
. . .		

PCI 120-10	*PCI Design Handbook, 7th Edition*	*1905A.1.1, 1905A.1.2 ~~1905A.1~~*

PTI	Post-Tensioning Institute 8601 North Black Canyon Highway, Suite 103 Phoenix, AZ 85021	
Standard reference number	Title	Referenced in code section number
. . .		
PTI-2004	*Recommendations for Prestressed Rock and Soil Anchors (4th Edition)*	*1810A.3.10.4, 1811A.2, 1812A.4, 1812A.5,1813A.2 ~~J106.2.4~~, ~~J106.2.5~~*
. . .		

. . .

TMS	The Masonry Society 3970 Broadway, Unit 201-D Boulder, CO 80304-1135	
Standard reference number	Title	Referenced in code section number
. . .		
402— 13	Building Code Requirements for Masonry Structures	*~~1410.2.1~~,1411.2.1, 2107A.5, ~~2114.10, 2114.11~~ 2114.7, 2114.8*
. . .		

. . .

WCLIB	West Coast Lumber Inspection Bureau P. O. Box 23145 Portland, OR 97281	
Standard reference number	Title	Referenced in code section number
. . .		
AITC 111-05	*Recommended Practice for Protection of Structural Glued Laminated Timber During Transit, Storage and Erection*	*2303.1.3.1*
. . .		
AITC 117-10	Standard Specifications for Structural Glued Laminated Timber of Softwood Species	*2303.1.3.1*
. . .		
AITC 404-05	*Standard for Radially Reinforcing Curved Glued Laminated Timber Members to Resist Radial Tension*	*2303.1.3.1*

. . .

All existing amendments that are not revised above shall continue without any change.

APPENDIX J
GRADING

This Appendix is not adopted by DSA

Adopt and/or codify chapter as amended below:

PROPOSED ADOPTION	DSA-SS	DSA-SS/CC	Comments

Adopt entire chapter without amendments			
Adopt entire chapter with amendments listed below			
Adopt only those sections listed below	~~X~~	~~X~~	
~~J101~~	~~X~~	~~X~~	
~~J102~~	~~X~~	~~X~~	
~~J105~~	~~X~~	~~X~~	
~~J106.2~~	~~X~~	~~X~~	
~~J107~~	~~X~~	~~X~~	
~~J107.5~~	~~X~~	~~X~~	
~~J108~~	~~X~~	~~X~~	
~~J109~~	~~X~~	~~X~~	
~~J110~~	~~X~~	~~X~~	
~~J111~~	~~X~~	~~X~~	
~~J112~~	~~X~~	~~X~~	

~~[All existing DSA amendments that are not revised below shall continue without change]~~

...

SECTION J106
EXCAVATIONS

...

~~[Relocated to Chapter 16A]~~ ~~**J106.2 Earth retaining shoring. [DSA-SS & DSA-SS/CC]**~~

~~**J106.2.1 General.** The requirements of this section shall apply to temporary and permanent earth retaining shoring using soldier piles and lagging with or without tie-back anchors in soil or rock, only when existing or new DSASS, DSA-SS/CC facilities are affected. Shoring used as construction means and methods only, which does not affect existing or new DSASS, DSA-SS/CC facilities, are not regulated by DSA and shall satisfy the requirements of the authorities having jurisdiction.~~

~~Design, construction, testing, and inspection shall satisfy the requirements of this code except as modified in Sections J106.2.2 through J106.2.8.~~

~~**J106.2.2 Duration.** Shoring shall be considered temporary when elements of the shoring will be exposed to site conditions for a period of less than one (1) year, and shall be considered permanent otherwise. Permanent shoring shall account for the increase in lateral soil pressure due to~~

~~*earthquake. At the end of the construction period, the existing and new structures shall not rely on the temporary shoring for support in anyway. Wood components shall not be used for permanent shoring lasting more than two (2) years. Wood components of the temporary shoring that may affect the performance of permanent structure shall be removed after the shoring is no longer required.*~~

~~*All components of the shoring shall have corrosion protection or preservative treatment for their expected duration. Wood components of the temporary shoring that will not be removed shall be treated in accordance with AWPA U1 (Commodity Specification A, Use Category 4B and Section 5.2), and shall be identified in accordance with Section 2303.1.8.1.*~~

~~***J106.2.3 Surcharge:*** *Surcharge pressure due to footings, traffic, or other sources shall be considered in design. If the footing surcharge is located within the semi-circular distribution or bulb of earth pressure (when shoring is located close to a footings), lagging shall be designed for lateral earth pressure due to footing surcharge. Soil arching effects may be considered in the design of lagging. Underpinning of the footing may be used in lieu of designing the shoring and lagging for surcharge pressure. Alternatively, continuously contacting drilled pier shafts near the footings shall be permitted. The lateral surcharge design pressure shall be derived using Boussinesq equations modified for the distribution of stresses in an elastic medium due to a uniform, concentrated or line surface load as appropriate and soil arching effects.*~~

~~***J106.2.4 Design and testing:*** *Except for the modifications as set forth in Sections J106.2.4.1 and J106.2.4.2 below, all Prestressed Rock and Soil Tie-back Anchors shall be designed and tested in accordance with PTI Recommendations for Prestressed Rock and Soil Anchors (PTI-2004).*~~

~~***J106.2.4.1 Geotechnical requirements:*** *The geotechnical report for the earth retaining shoring shall address the following:*~~

~~*12. Minimum diameter and minimum spacing for the anchors including consideration of group effects.*~~

~~*13. Maximum unbonded length and minimum bonded length of the tie-back anchors.*~~

~~*14. Maximum recommended anchor tension capacity based upon the soil or rock strength / grout bond and anchor depth / spacing.*~~

~~*15. Allowable bond stress at the ground / grout interface and applicable factor of safety for ultimate bond stress for the anchor. For permanent anchors, a minimum factor of safety of 2.0 shall be applied to ground soil interface as required by PTI-2004 Section 6.6.*~~

~~*16. Minimum grout pressure for installation and post grout pressure for the anchor. The presumptive post grout pressure of 300 psi may be used for all soil type.*~~

~~*17. Class I Corrosion Protection is required for all permanent anchors. The geotechnical report shall specify the corrosion protection recommendations for temporary anchors.*~~

~~*18. Performance test for the anchors shall be at a minimum of two (2) times the design loads and shall not exceed 80% of the specified minimum tensile strength of the anchor rod. A creep test is required for all prestressed anchors that are performance tested. All production anchors shall be tested at 150% of design loads and shall not be greater than 70% of the specified minimum tensile strength of the anchor rod.*~~

~~19. Earth pressure, surcharge pressure, and the seismic increment of earth pressure loading, when applicable.~~

~~20. Maximum recommended lateral deformation at the top of the soldier pile, at the tie-back anchor locations, and the drilled pier concrete shafts at the lowest grade level.~~

~~21. Allowable vertical soil bearing pressure, friction resistance, and lateral passive soil resistance for the drilled pier concrete shafts and associated factors of safety for these allowable capacities.~~

~~22. Soil pier shaft / pile interaction assumptions and lateral soil stiffness to be used in design for drilled pier concrete shaft or pile lateral loads.~~

~~23. Acceptable drilling methods.~~

~~24. Geotechnical observation and monitoring recommendations.~~

~~**J106.2.4.2 Structural requirements:**~~

~~10. Tendons shall be thread-bar anchors conforming to ASTM A 722.~~

~~11. Anchor design loads shall be based upon the load combinations in Section 1605A.3.1 and shall not exceed 60 percent of the specified minimum tensile strength of the tendons.~~

~~12. The anchor shall be designed to fail in grout bond to the soil or rock before pullout of the soil wedge.~~

~~13. Design of shoring system shall account for as-built locations of soil anchors considering all specified construction tolerances in Section J106.2.8.~~

~~14. Design of shoring system shall account for both short and long term deformation.~~

~~**J106.2.4.3 Testing of tie-back anchors:**~~

~~5. The geotechnical engineer shall keep a record at job site of all test loads, total anchor movement, and report their accuracy.~~

~~6. If a tie-back anchor initially fails the testing requirements, the anchor shall be permitted to be re-grouted and retested. If anchor continues to fail, the followings steps shall be taken:~~

~~a. The contractor shall determine the cause of failure – variations of the soil conditions, installation methods, materials, etc.~~
~~b. Contractor shall propose a solution to remedy the problem. The proposed solution will need to be reviewed and approved by geotechnical engineer, shoring design engineer, and the building official.~~

~~7. After a satisfactory test, each anchor shall be locked-off in accordance with Section 8.4 of PTI 2004.~~

~~8. The shoring design engineer shall specify design loads for each anchor.~~

~~**J106.2.5 Construction:** The construction procedure shall address the following:~~

15. ~~Holes drilled for piles / tie-back anchors shall be done without detrimental loss of ground, sloughing or caving of materials and without endangering previously installed shoring members or existing foundations.~~
16. ~~Drilling of earth anchor shafts for tie-backs shall occur when the drill bench reaches two to three feet below the level of the tie-back pockets.~~
17. ~~Casing or other methods shall be used where necessary to prevent loss of ground and collapse of the hole.~~
18. ~~The drill cuttings from earth anchor shaft shall be removed prior to anchor installation.~~
19. ~~Unless tremie methods are used, all water and loose materials shall be removed from the holes prior to installing piles / tie-backs.~~
20. ~~Tie-back anchor rods with attached centralizing devices shall be installed into the shaft or through the drill casing. Centralizing device shall not restrict movement of the grout.~~
21. ~~After lagging installation, voids between lagging and soil shall be backfilled immediately to the full height of lagging.~~
22. ~~The soldier piles shall be placed within specified tolerances in the drilled hole and braced against displacement during grouting. Fill shafts with concrete up to top of footing elevation, rest of the shaft can generally be filled with lean concrete. Excavation for lagging shall not be started until concrete has achieved sufficient strength for all anticipated loads as determined by the shoring design engineer.~~
23. ~~Where boulders and / or cobbles have been identified in the geotechnical reports, contractor shall be prepared to address boulders and / or cobbles that may be encountered during the drilling of soldier piles and Tie-back anchors.~~
24. ~~The grouting equipment shall produce grout free of lumps and indispensed cement. The grouting equipment shall be sized to enable the grout to be pumped in continuous operation. The mixer shall be capable of continuously agitating the grout.~~
25. ~~The quantity of grout and grout pressure shall be recorded. The grout pressure shall be controlled to prevent excessive heave in soils or fracturing rock formations.~~
26. ~~If post-grouting is required, post grouting operation shall be performed after initial grout has set for 24 hours in the bond length only. Tie-backs shall be grouted over a sufficient length (anchor bond length) to transfer the maximum anchor force to the anchor grout.~~
27. ~~Testing of anchors may be performed after post-grouting operations provided grout has reached strength of 3,000 psi as required by PTI 2004 Section 6.11.~~
28. ~~Anchor rods shall be tensioned straight and true. Excavation directly below the anchors shall not continue before those anchors are tested.~~

~~J106.2.6 Inspection, survey monitoring, and observation~~

12. ~~The shoring design engineer or his designee shall make periodic inspections of the job site for the purpose of observing the installation of shoring system, testing of tie-back anchors, and monitoring of survey.~~

13. ~~Testing, inspection, and observation shall be in accordance with testing, inspection and observation requirements approved by the building official. The following activities and materials shall be tested, inspected, or observed by the special inspector and geotechnical engineer:~~
    a. ~~Sampling and testing of concrete in soldier pile and tie-back anchor shafts.~~
    b. ~~Fabrication of tie-back anchor pockets on soldier beams~~
    c. ~~Installation and testing of tie-back anchors.~~
    d. ~~Survey monitoring of soldier pile and tie-back load cells.~~
    e. ~~Survey Monitoring of existing buildings.~~

~~14. A complete and accurate record of all soldier pile locations, depths, concrete strengths, tie-back locations and lengths, tie-back grout strength, quantity of concrete per pile, quantity of grout per tie-back and applied tie-back loads shall be maintained by the special inspector and geotechnical engineer. The shoring design engineer shall be notified of any unusual conditions encountered during installation.~~

~~15. Calibration data for each test jack, pressure gauge, and master pressure gauge shall be verified by the special inspector and geotechnical engineer. The calibration tests shall be performed by an independent testing laboratory and within 120 calender days of the data submitted.~~

~~16. Monitoring points shall be established at the top and at the anchor heads of selected soldier piles and at intermediate intervals as considered appropriate by the geotechnical engineer.~~

~~17. Control points shall be established outside the area of influence of the shoring system to ensure the accuracy of the monitoring readings.~~

~~18. The periodic basis of shoring monitoring, as a minumum, shall be as follows:~~

~~a. Intitial monitoring shall be performed prior to any excavation.~~
~~b. Once excavation has begun, the periodic readings shall be taken weekly until excavation reaches the estimated subgrade elevation and the permanent foundation is complete.~~
~~c. If performance of the shoring is within established guidelines, shoring design engineer may permit the periodic readings to be bi-weekly. Once initiated, bi-weekly readings shall continue until the building slab at ground floor level is completed and capable of transmitting lateral loads to the permanent structure. Thereafter, readings can be monthly.~~
~~d. Where the building has been designed to resist lateral earth pressures, the periodic monitoring of the soldier piles and adjacent structure can be discontinued once the ground floor diaphragm and subterranean portion of the structure is capable of resisting lateral soil loads and approved by the shoring design engineer, geotechnical engineer, and the building official.~~
~~e. Additional readings shall be taken when requested by special inspector, shoring design engineer, geotechnical engineer, or the building official.~~

~~19. Monitoring reading shall be submitted to shoring design engineer, engineer in responsible charge, and the building official within 3 working days after they are conducted. Monitoring readings shall be accurate to within 0.01 feet. Results are to be submitted in tabular form showing at least the intial date of monitoring and reading, current monitoring date and reading and difference between the two readings.~~

~~20. If the total cummulative horizontal or vertical movement (from start of construction) of the existing buildings reaches ½" or soldier piles reaches 1" all excavation activities shall be suspended. The geotechnical and shoring design engineer shall determine the cause of movement, if any, and recommend corrective measures, if necessary, before excavation continues.~~

~~21. If the total cummulative horizontal or vertical movement (from start of construction) of the existing buildings reaches 3/4" or soldier piles reaches 1 ½" all excavation activities shall be suspended until the causes, if any, can be determined. Supplemental shoring shall be devised to eliminate further movement and the building official shall review and approve the supplemental shoring before excavation continues.~~

~~22. Monitoring of Tie-back Anchor Loads:~~

~~e. Load cells shall be installed at the tie-back heads adjacent to buildings at maximum interval of 50', with a minimum of one load cells per wall.~~
~~f. Load cell readings shall be taken once a day during excavation and once a week during the remainder of construction.~~
~~g. Load cell readings shall be submitted to the geotechnical engineer, shoring design engineer, engineer in responsible charge, and the building official.~~
~~h. Load cell readings can be terminated once the temporary shoring no longer provides support for the buildings.~~

~~**J106.2.7 Monitoring of existing DSASS, DSA-SS/CC structures**~~

~~8. The contractor shall complete a written and photographic log of all existing OSHPD 1 & 4 structures within 100 ft or three times depth of shoring, prior to construction. A licensed surveyor shall document all existing substantial cracks in adjacent existing structures.~~
~~9. Contractor shall document existing condition of wall cracks adjacent to shoring walls prior to start of construction.~~
~~10. Contractor shall monitor existing walls for movement or cracking that may result from adjacent shoring.~~
~~11. If excessive movement or visible cracking occurs, contractor shall stop work and shore / reinforce excavation and contact shoring design engineer and the building official.~~
~~12. Monitoring of the existing structure shall be at reasonable intervals as required by the registered design professional subject to approval of the building official. Monitoring shall be performed by a licensed surveyor and shall consist of vertical and lateral movement of the existing structures. Prior to starting shoring installation a pre-construction meeting shall take place between the contractor, shoring design engineer, surveyor, geotechnical engineer, and the building official to identify monitoring locations on existing buildings.~~
~~13. If in the opinion of the building official or shoring design engineer, monitoring data indicate excessive movement or other distress, all excavation shall cease until the geotechnical engineer and shoring design engineer investigates the situation and makes recommendations for remediation or continuing.~~
~~14. All reading and measurements shall be submitted to the building official and shoring design engineer.~~

~~**J106.2.8 Tolerances.** Following tolerances shall be specified on the construction documents.~~

~~3. Soldier Piles:~~

~~i. Horizontal and vertical construction tolerances for the soldier pile locations.~~
~~ii. Soldier pile plumbness requirements (angle with vertical line).~~

~~4. Tie-back Anchors:~~

~~i. Allowable deviation of anchor projected angle from specified vertical and horizontal design projected angle.~~
~~ii. Anchor clearance to the existing/new utilities and structures.~~

SECTION J107
FILLS

J107.1 General. Unless otherwise recommended in the soils report, fills shall conform to provisions of this section.

...

J107.5 Compaction. All fill material shall be compacted to 90 percent of maximum density as determined by ASTM D 1557, Modified Proctor, in lifts not exceeding 12 inches (305 mm) in depth.

~~***[DSA-SS, DSA-SS/CC]*** *This section establishes minimum requirements only.*~~

...

~~[Relocated to Chapter 18A]~~ ~~***Section J112***~~
~~***Vibro Stone Columns for Ground Improvement***~~

~~***J112.1 General. [OSHPD 1, 2, & 4]*** *This section shall apply to Vibro Stone Columns (VSCs) for ground improvement using unbounded aggregate materials. Vibro stone column provisions in this section are intended to increase bearing capacity, reduce settlements, and mitigate liquefaction for shallow foundations. These requirements shall not be used for grouted or bonded stone columns, ground improvement for deep foundation elements, or changing site class. VSCs shall not be considered as a deep foundation element.~~

~~*Ground improvement shall be installed under the entire building/structure footprint and not under isolated foundation elements only.*~~

~~*Design, construction, testing, and inspection shall satisfy the requirements of this code except as modified in Sections J112.2 through J112.5.*~~

~~***J112.2 Geotechnical Report.*** *Geotechnical report shall specify vibro stone column requirements to ensure uniformity in total and differential immediate settlement, long term settlement, and earthquake induced settlement.*~~

~~*10. Soil compaction shall be sufficient to mitigate potential for liquefaction as described in California Geological Survey (CGS) Special Publication 117A (SP-117A): Guidelines for Evaluating and Mitigating Seismic Hazard in California.*~~

~~*11. Area replacement ratio for the compaction elements and the basis of its determination shall be explained. Minimum factor of safety for soil compaction shall be in accordance with SP-117A.*~~

~~*12. Depth of soil compaction elements and extent beyond the footprint of structures/foundation shall be defined. Extent beyond the foundation shall be half the depth of the VSCs with a minimum of 10' or an approved alternative.*~~

~~*13. Minimum diameter and maximum spacing of soil compaction elements shall be specified. VSC's shall not be less than 2 feet in diameter and center to center spacing shall not exceed 8 feet.*~~

~~*14. The modulus of subgrade reactions for shallow foundations shall account for the presence of compaction elements.*~~

~~*15. The modulus of subgrade reactions, long-term settlement, and post-earthquake settlement shall be specified along with expected total and differential settlements for design.*~~

16. ~~The acceptance criteria for Cone Penetration Test (CPT) in accordance with ASTM D 3441 complemented by Standard Penetration Test (SPT) in accordance with ASTM D 1586, if necessary, to verify soil improvement shall be specified~~

17. ~~The requirements for special inspection and observation by the Geotechnical engineer shall be specified.~~

18. ~~A Final Verified Report (FVR) documenting the installation of the ground improvement system and confirming that the ground improvement acceptance criteria have been met shall be prepared by the Geotechnical Engineer and submitted to the enforcement agency for review and approval.~~

~~**J112.3 Shallow Foundations.** VSCs under the shallow foundation shall be located symmetrically around the centroid of the footing or load.~~

4. ~~There shall be a minimum of four stone columns under each isolated or continuous/combined footing or approved equivalent.~~

5. ~~The VSCs or deep foundation elements shall not be used to resist tension or overturning uplift from the shallow foundations.~~

6. ~~The foundation design for the shallow foundation shall consider the increased vertical stiffness of the VSCs as point supports for analysis, unless it is substantiated that the installation of the VSCs result in improvement of the surrounding soils such that the modulus of subgrade reaction, long term settlement, and post earthquake settlement can be considered uniform throughout.~~

~~**J112.4 Installation.** VSCs shall be installed with vibratory probes. Vertical columns of compacted unbounded aggregate shall be formed through the soils to be improved by adding gravel near the tip of the vibrator and progressively raising and re-penetrating the vibrator which will results in the gravel being pushed into the surrounding soil.~~

~~Gravel aggregate for VSCs shall be well graded with a maximum size of 6" and not more than 10% smaller than 3/8" after compaction.~~

~~**J112.5 Construction Documents.** Construction documents for VSCs, as a minimum, shall include the following:~~

6. ~~Size, depth, and location of VSCs.~~
7. ~~Extent of soil improvements along with building/structure foundation outlines.~~
8. ~~Field verification requirements and acceptance criteria using CPT/SPT.~~
9. ~~The locations where CPT/SPT shall be performed.~~
10. ~~The Testing, Inspection and Observation (TIO) program shall indicate the inspection and observation required for the VSCs.~~

~~[DSA is not adopting Appendix J since requirements are now covered in Chapter 18A]~~

Notation for [DSA-SS]
Authority: Education Code § 17310 and 81142, and H&S Code §16022.
Reference: Education Code §§ 17280 through 17317, and 81130 through 81147, and Health and Safety Code §§16000 through 16023.

Notation for [DSA-SS/CC]
Authority: Education Code § 81053.

Reference: Education Code §§ 81052, 81053, and 81130 through 81147.

FINAL EXPRESS TERMS
FOR
PROPOSED BUILDING STANDARDS
OF THE
DEPARTMENT OF HOUSING AND COMMUNITY DEVELOPMENT
REGARDING THE ADOPTION BY REFERENCE OF THE
2015 EDITION OF THE INTERNATIONAL BUILDING CODE
WITH PROPOSED AMENDMENTS INTO THE 2016 CALIFORNIA BUILDING CODE (CBC)
(NON-ACCESS)
CALIFORNIA CODE OF REGULATIONS, TITLE 24, PART 2

(HCD 03/15)

The Department of Housing and Community Development (HCD) proposes to adopt the 2015 edition of the International Building Code (IBC) for codification and effectiveness into the 2016 edition of the California Building Code (CBC) as presented on the following pages, including any necessary amendments. HCD further proposes to:

- Repeal the 2012 edition of the International Building Code;
- Repeal the 2013 edition of the California Building Code, which includes amendments to the model code that are no longer necessary;
- Repeal or amend building standards that are not addressed by a model code;
- Relocate or codify existing adopted and necessary amendments to the model code into the format of the model code proposed for adoption, the action of which has no regulatory effect; and/or
- Adopt new building standards that are not addressed by the model code proposed for adoption.

LEGEND FOR EXPRESS TERMS:

1. **IBC language with new California amendments:** IBC language shown in normal Arial 9-point; California amendments to IBC text shown *underlined and in italics* with vertical bar in left margin.

2. **Existing California amendments being modified:** All such language shown in *italics*, modified language is *underlined* or shown in ~~*strikeout*~~ with vertical bar in left margin.

3. **Existing California amendments with no modifications:** All such existing language shown in *italics*, modified model code language shown in ~~strikeout~~.

4. **Text not being modified:** All language not displayed in full is shown as "..." (i.e., ellipsis).

5. **Repealed text:** All language shown in ~~strikeout.~~

6. **Notation:** Authority and Reference citations are provided at the end of each action.

SUMMARY OF REGULATORY ACTION

HCD PROPOSES TO:

- Adopt standards from the 2015 International Building Code into the 2016 California Building Code **without amendments**.
- Adopt standards from the 2015 International Building Code into the 2016 California Building Code **with new amendments**.
- Bring forward existing California Amendments from the 2013 California Building Code for adoption into the 2016 California Building Code **with modifications**.
- Repeal 2013 California Amendments, which are **not** brought forward into the 2016 California Building Code.
- Bring forward existing California Amendments from the 2013 California Building Code for adoption into the 2016 California Building Code **without modifications**, except for editorial corrections.

1. HCD proposes to bring forward existing California amendments in Chapter 1, Division I, from the 2013 California Building Code for adoption into the 2016 California Building Code with modifications as follows:

CHAPTER 1
SCOPE AND ADMINISTRATION

DIVISION I
CALIFORNIA ADMINISTRATION

SECTION 1.1
GENERAL

1.1.1 Title. *These regulations shall be known as the California Building Code, may be cited as such and will be referred to herein as "this code." The California Building Code is Part 2 of twelve parts of the official compilation and publication of the adoption, amendment and repeal of building regulations to the California Code of Regulations, Title 24, also referred to as the California Building Standards Code. This part incorporates by adoption the ~~2012~~ 2015 International Building Code of the International Code Council with necessary California amendments.*

1.1.2 Purpose. *The purpose of this code is to establish the minimum requirements to safeguard the public health, safety and general welfare through structural strength, means of egress facilities, stability, access to persons with disabilities, sanitation, adequate lighting and ventilation and energy conservation; safety to life and property from fire and other hazards attributed to the built environment; and to provide safety to fire fighters and emergency responders during emergency operations.*

1.1.3 Scope. *The provisions of this code shall apply to the construction, alteration, movement, enlargement, replacement, repair, equipment, use and occupancy, location, maintenance, removal and demolition of every building or structure or any appurtenances connected or attached to such buildings or structures throughout the State of California.*

1.1.3.1 Nonstate-regulated buildings, structures, and applications. *Except as modified by local ordinance pursuant to Section 1.1.8, the following standards in the California Code of Regulations, Title 24, Parts 2, 2.5, 3, 4, 5, 6, 9, 10 and 11 shall apply to all occupancies and applications not regulated by a state agency.*

1.1.3.2 State-regulated buildings, structures, and applications. *The model code, state amendments to the model code, and/or state amendments where there are no relevant model code provisions shall apply to the following buildings, structures, and applications regulated by state agencies as specified in Sections 1.2 through 1.14, except where modified by local ordinance pursuant to Section 1.1.8. When adopted by a state agency, the provisions of this code shall be enforced by the appropriate enforcing agency, but only to the extent of authority granted to such agency by the state legislature.*

Note: *See Preface to distinguish the model code provisions from the California provisions.*

1. *State-owned buildings, including buildings constructed by the Trustees of the California State University, and to the extent permitted by California laws, buildings designed and constructed by the Regents of the University of California, and regulated by the Building Standards Commission. See Section 1.2 for additional scope provisions.*
2. *Local detention facilities regulated by the Corrections Standards Authority. See Section 1.3 for additional scope provisions.*
3. *Barbering, cosmetology or electrolysis establishments, acupuncture offices, pharmacies, veterinary facilities and structural pest control locations regulated by the Department of Consumer Affairs. See Section 1.4 for additional scope provisions.*
4. *Energy efficiency standards regulated by the California Energy Commission. See Section 1.5 for additional scope provisions.*
5. *Dairies and places of meat inspection regulated by the Department of Food and Agriculture. See Section 1.6 for additional scope provisions.*

6. *Organized camps, laboratory animal quarters, public swimming pools, radiation protection, commissaries serving mobile food preparation vehicles and wild animal quarantine facilities regulated by the Department of Public Health. See Section 1.7 for additional scope provisions.*

7. *Hotels, motels, lodging houses, ~~apartment houses~~ apartments, dwellings, dormitories, condominiums, shelters for homeless persons, congregate residences, employee housing, factory-built housing and other types of dwellings containing sleeping accommodations with or without common toilets or cooking facilities. See Section 1.8.2.1.1 for additional scope provisions.*

8. *Accommodations for persons with disabilities in buildings containing newly constructed covered multifamily dwellings, new common use ~~spaces~~ areas serving existing covered multifamily dwellings, additions to existing buildings where the addition alone meets the definition of ~~COVERED MULTIFAMILY DWELLING,"~~ covered multifamily dwellings, and new common-use ~~spaces~~ areas serving new covered multifamily dwellings, which are regulated by the Department of Housing and Community Development. See Section 1.8.2.1.2 for additional scope provisions.*

9. *Permanent buildings and permanent accessory buildings or structures constructed within mobilehome parks and special occupancy parks regulated by the Department of Housing and Community Development. See Section 1.8.2.1.3 for additional scope provisions.*

10. *Accommodations for persons with disabilities regulated by the Division of the State Architect. See Section 1.9.1 for additional scope provisions.*

11. *Public elementary and secondary schools, community college buildings, and state-owned or state-leased essential service buildings regulated by the Division of the State Architect. See Section 1.9.2 for additional scope provisions.*

12. *Qualified historical buildings and structures and their associated sites regulated by the State Historical Building Safety Board with the Division of the State Architect. See Section 1.9.3 for additional scope provisions.*

13. *General acute care hospitals, acute psychiatric hospitals, skilled nursing and/or intermediate care facilities, clinics licensed by the Department of Public Health and correctional treatment centers regulated by the Office of Statewide Health Planning and Development. See Section 1.10 for additional scope provisions.*

14. *Applications regulated by the Office of the State Fire Marshal include, but are not limited to, the following in accordance with Section 1.11:*

    14.1 Buildings or structures used or intended for use as an:

    1. *Asylum, jail, prison.*
    2. *Mental hospital, hospital, home for the elderly, children's nursery, children's home or institution, school or any similar occupancy of any capacity.*
    3. *Theater, dancehall, skating rink, auditorium, assembly hall, meeting hall, nightclub, fair building or similar place of assemblage where 50 or more persons may gather together in a building, room or structure for the purpose of amusement, entertainment, instruction, deliberation, worship, drinking or dining, awaiting transportation, or education.*
    4. *Small family day-care homes, large family day-care homes, residential facilities and residential facilities for the elderly, residential care facilities.*
    5. *State institutions or other state-owned or state-occupied buildings.*
    6. *High rise structures.*
    7. *Motion picture production studios.*
    8. *Organized camps.*
    9. *Residential structures.*

    14.2. Tents, awnings or other fabric enclosures used in connection with any occupancy.

    14.3. Fire alarm devices, equipment and systems in connection with any occupancy:

    14.4. Hazardous materials, flammable and combustible liquids.

14.5. Public school automatic fire detection, alarm and sprinkler systems.

14.6. Wildland-urban interface fire areas.

15. Public libraries constructed and renovated using funds from the California Library Construction and Renovation Bond Act of 1988 and regulated by the State Librarian. See Section 1.12 for additional scope provisions.

16. Graywater systems regulated by the Department of Water Resources. See Section 1.13 for additional scope provisions.

17. For applications listed in Section 1.9.1 regulated by the Division of State Architect–Access Compliance, outdoor environments and uses shall be classified according to accessibility uses described in Chapters 11A, 11B and 11C.

18. Marine Oil Terminals regulated by the California State Lands Commission. See Section 1.14 for additional scope provisions.

1.1.4 Appendices. *Provisions contained in the appendices of this code shall not apply unless specifically adopted by a state agency or adopted by a local enforcing agency in compliance with Health and Safety Code Section 18901 et seq. for Building Standards Law, Health and Safety Code Section 17950 for State Housing Law and Health and Safety Code Section 13869.7 for Fire Protection Districts. See Section 1.1.8 of this code.*

1.1.5 Referenced codes. *The codes, standards and publications adopted and set forth in this code, including other codes, standards and publications referred to therein are, by title and date of publication, hereby adopted as standard reference documents of this code. When this code does not specifically cover any subject related to building design and construction, recognized architectural or engineering practices shall be employed. The National Fire Codes, standards and the Fire Protection Handbook of the National Fire Protection Association are permitted to be used as authoritative guides in determining recognized fire prevention engineering practices.*

1.1.6 Nonbuilding standards, orders and regulations. *Requirements contained in the International Building Code, or in any other referenced standard, code or document, which are not building standards as defined in Health and Safety Code Section 18909, shall not be construed as part of the provisions of this code. For nonbuilding standards, orders and regulations, see other titles of the California Code of Regulations.*

1.1.7 Order of precedence and use.

1.1.7.1 Differences. *In the event of any differences between these building standards and the standard reference documents, the text of these building standards shall govern.*

1.1.7.2 Specific provisions. *Where a specific provision varies from a general provision, the specific provision shall apply.*

1.1.7.3 Conflicts. *When the requirements of this code conflict with the requirements of any other part of the California Building Standards Code, Title 24, the most restrictive requirements shall prevail.*

> ***1.1.7.3.1 Detached one-and two-family dwellings.*** *Detached one-and two-family dwellings, efficiency dwelling units, lodging houses, live/work units, townhouses not more than three stories above grade plane in height with a separate means of egress, and their accessory structures, may be designed and constructed in accordance with this code or the California Residential Code, but not both, unless the proposed structure(s) or element(s) exceed the design limitations established in the California Residential Code, and the code user is specifically directed by the California Residential Code to use this code.*

1.1.8 City, county, or city and county amendments, additions or deletions. *The provisions of this code do not limit the authority of city, county, or city and county governments to establish more restrictive and reasonably necessary differences to the provisions contained in this code pursuant to complying with Section 1.1.8.1. The effective date of amendments, additions or deletions to this code by a city, county, or city and county filed pursuant to Section 1.1.8.1 shall be the date filed. However, in no case shall the amendments, additions or deletions to this code be effective any sooner than the effective date of this code.*

Local modifications shall comply with Health and Safety Code Section 18941.5 for Building Standards Law, Health and Safety Code Section 17958 for State Housing Law or Health and Safety Code Section 13869.7 for Fire Protection Districts.

1.1.8.1 Findings and filings.

1. *The city, county, or city and county shall make express findings for each amendment, addition or deletion based upon climatic, topographical or geological conditions.*

   Exception: *Hazardous building ordinances and programs mitigating unreinforced masonry buildings.*

2. *The city, county, or city and county shall file the amendments, additions or deletions expressly marked and identified as to the applicable findings. Cities, counties, cities and counties, and fire departments shall file the amendments, additions or deletions, and the findings with the California Building Standards Commission at 2525 Natomas Park Drive, Suite 130, Sacramento, CA 95833.*

3. *Findings prepared by fire protection districts shall be ratified by the local city, county, or city and county and filed with the California Department of Housing and Community Development, Division of Codes and Standards, P.O. Box 1407, Sacramento, CA 95812-1407 or ~~1800 3rd Street, Room 260, Sacramento, CA 95811~~ 2020 W. El Camino Avenue, Suite 250, Sacramento, CA 95833-1829.*

1.1.9 Effective date of this code. *Only those standards approved by the California Building Standards Commission that are effective at the time an application for building permit is submitted shall apply to the plans and specifications for, and to the construction performed under, that permit. For the effective dates of the provisions contained in this code, see the History Note page of this code.*

1.1.10 Availability of codes. *At least one complete copy each of Titles 8, 19, 20, 24 and 25 with all revisions shall be maintained in the office of the building official responsible for the administration and enforcement of this code. Each state department concerned and each city, county, or city and county shall have an up-to-date copy of the code available for public inspection. See Health and Safety Code Section 18942 (~~d~~ e) (1) and (2).*

1.1.11 Format. *This part fundamentally adopts the International Building Code by reference on a chapter-by-chapter basis. When a specific chapter of the International Building Code is not printed in the code and is marked "Reserved" such chapter of the International Building Code is not adopted as a portion of this code. When a specific chapter of the International Building Code is marked "Not adopted by the State of California" but appears in the code, it may be available for adoption by local ordinance.*

Note: *Matrix Adoption Tables at the front of each chapter may aid the code user in determining which chapter or sections within a chapter are applicable to buildings under the authority of a specific state agency, but they are not to be considered regulatory.*

1.1.12 Validity. *If any chapter, section, subsection, sentence, clause or phrase of this code is for any reason held to be unconstitutional, contrary to statute, exceeding the authority of the state as stipulated by statutes or otherwise inoperative, such decision shall not affect the validity of the remaining portion of this code.*

SECTION 1.8
DEPARTMENT OF HOUSING AND COMMUNITY DEVELOPMENT

1.8.1 Purpose. *The purpose of this code is to establish the minimum requirements necessary to protect the health, safety and general welfare of the occupants and the public by governing accessibility, erection, construction, reconstruction, enlargement, conversion, alteration, repair, moving, removal, demolition, occupancy, use, height, court, area, sanitation, ventilation, maintenance and safety to life and property from fire and other hazards attributed to the built environment.*

SECTION 1.8.2
AUTHORITY AND ABBREVIATIONS

1.8.2.1 General. *The Department of Housing and Community Development is authorized by law to promulgate and adopt building standards and regulations for several types of building applications. The applications under the authority of the Department of Housing and Community Development are listed in Sections 1.8.2.1.1 through 1.8.2.1.3.*

Note: *See the California Residential Code for detached one-and two-family dwellings and townhouses.*

1.8.2.1.1 Housing construction.

Application *- Hotels, motels, lodging houses, ~~apartment houses~~ apartments, dwellings, dormitories, condominiums, shelters for homeless persons, congregate residences, employee housing, factory-built housing and other types of dwellings containing sleeping accommodations with or without common toilet or cooking facilities including accessory buildings, facilities and uses thereto. Sections of this code which pertain to applications listed in this section are identified using the abbreviation "HCD 1."*

Enforcing Agency *– Local building department or the Department of Housing and Community Development.*

Authority cited *–Health and Safety Code Sections 17040, 17050, 17920.9, 17921, 17921.3, 17921.6, 17921.10, 17922, 17922.6, 17922.12, 17927, 17928, 17959.6, 18300, 18552, 18554, 18620, 18630, 18640, 18670, 18690, 18691, 18865, 18871.3, 18871.4, 18873, 18873.1, 18873.2, 18873.3, 18873.4, 18873.5, 18938.3, 18944.11 and 19990; and Government Code Section 12955.1.*

Reference *–Health and Safety Code Sections 17000 through 17062.5, 17910 through 17995.5, 18200 through 18700, 18860 through 18874, and Sections 19960 through 19997; and Government Code Sections 12955.1 and 12955.1.1.*

1.8.2.1.2 Housing accessibility.

Application *– ~~COVERED MULTIFAMILY DWELLINGS"~~ Covered multifamily dwellings as defined in Chapter 2 including, but not limited to, lodging houses, dormitories, timeshares, condominiums, shelters for homeless persons, congregate residences, ~~apartment houses~~ apartments, dwellings, employee housing, factory-built housing and other types of dwellings containing sleeping accommodations with or without common toilet or cooking facilities.*

Sections of this code identified by the abbreviation "HCD 1-AC" require specific accommodations for ~~PERSONS WITH DISABILITIES"~~ persons with disabilities as defined in Chapter 2. The application of such provisions shall be in conjunction with other requirements of this code and apply only to newly constructed ~~COVERED MULTIFAMILY DWELLINGS"~~ covered multifamily dwellings as defined in Chapter 2 ~~of the California Building Code~~. "HCD 1-AC" applications include, but are not limited to, the following:

1. *All newly constructed ~~"COVERED MULTIFAMILY DWELLINGS"~~ covered multifamily dwellings as defined in Chapter 2.*
2. *New ~~"COMMON USE AREAS"~~ common use areas as defined in Chapter 2, serving existing covered multifamily dwellings.*
3. *Additions to existing buildings, where the addition alone meets the definition of ~~"COVERED MULTIFAMILY DWELLINGS"~~ covered multifamily dwellings as defined in Chapter 2.*
4. *New common use areas serving new covered multifamily dwellings.*
5. *Where any portion of a building's exterior is preserved, but the interior of the building is removed, including all structural portions of floors and ceilings, the building is considered a new building for determining the application of Chapter 11A.*

"HCD 1-AC" building standards generally do not apply to public use areas or public accommodations such as hotels and motels and public housing. Public use areas, public accommodations, and public housing, as defined in Chapter 2 ~~of this code~~, are subject to the Division of the State Architect (DSA-AC) in Chapter 11B, and are referenced in Section 1.9.1.

Newly constructed covered multifamily dwellings, which can also be defined as public housing, shall be subject to the requirements of Chapter 11A and Chapter 11B.

Enforcing Agency *– Local building department or the Department of Housing and Community Development.*

Authority cited *–Health and Safety Code Sections 17040, 17050, 17920.9, 17921, 17921.3, 17921.6, 17921.10, 17922, 17922.6, 17922.12, 17927, 17928, 17959.6, 18300, 18552, 18554, 18620, 18630, 18640, 18670, 18690, 18691, 18865, 18871.3, 18871.4, 18873, 18873.1, 18873.2, 18873.3, 18873.4, 18873.5, 18938.3, 18944.11 and 19990; and Government Code Section 12955.1.*

Reference *– Health and Safety Code Sections 17000 through 17062.5, 17910 through 17995.5, 18200 through 18700, 18860 through 18874, and 19960 through 19997; and Government Code Sections 12955.1 and 12955.1.1.*

1.8.2.1.3 Permanent buildings in mobilehome parks and special occupancy parks.

Application *– Permanent buildings, and permanent accessory buildings or structures, constructed within mobilehome parks and special occupancy parks that are under the control and ownership of the park operator. Sections of this code which pertain to applications listed in this section are identified using the abbreviation "HCD 2."*

Enforcing Agency *– The Department of Housing and Community Development, local building department or other local agency that has assumed responsibility for the enforcement of Health and Safety Code, Division 13, Part 2.1, commencing with Section 18200 for mobilehome parks and Health and Safety Code, Division 13, Part 2.3, commencing with Section 18860 for special occupancy parks.*

Authority cited *- Health and Safety Code Sections 17040, 17050, 17920.9, 17921, 17921.3, 17921.6, 17821.10, 17922, 17922.6, 17922.12, 17927, 17928, 17959.6, 18300, 18552, 18554, 18620, 18630, 18640, 18670, 18690, 18691, 18865, 18871.3, 18871.4, 18873, 18873.1, 18873.2, 18873.3, 18873.4, 18873.5, 18938.3, 18944.11 and 19990; and Government Code Section 12955.1.*

Reference *- Health and Safety Code Sections 17000 through 17062.5, 17910 through 17995.5, 18200 through 18700, 18860 through 18874, and 19960 through 19997; and Government Code Sections 12955.1 and 12955.1.1.*

SECTION 1.8.3
LOCAL ENFORCING AGENCY

1.8.3.1 Duties and powers. *The building department of every city, county, or city and county shall enforce all the provisions of law, this code, and the other rules and regulations promulgated by the Department of Housing and Community Development pertaining to the installation, erection, construction, reconstruction, movement, enlargement, conversion, alteration, repair, removal, demolition or arrangement of ~~apartment houses~~ apartments, condominiums, hotels, motels, lodging houses and dwellings, including accessory buildings, facilities and uses thereto.*

The provisions regulating the erection and construction of dwellings and appurtenant structures shall not apply to existing structures as to which construction is commenced or approved prior to the effective date of these regulations. Requirements relating to use, maintenance and occupancy shall apply to all dwellings and appurtenant structures approved for construction or constructed before or after the effective date of this code.

For additional information regarding the use and occupancy of existing buildings and appurtenant structures, see California Code of Regulations, Title 25, Division 1, Chapter 1, Subchapter 1, commencing with Article 1, Section 1.

1.8.3.2 Laws, rules and regulations. *Other than the building standards contained in this code, and notwithstanding other provisions of law, the statutory authority and location of the laws, rules, and regulations to be enforced by local enforcing agencies are listed by statute in Sections 1.8.3.2.1 through 1.8.3.2.5 below:*

1.8.3.2.1 State Housing Law. *Refer to the State Housing Law, California Health and Safety Code, Division 13, Part 1.5, commencing with Section 17910 and California Code of Regulations, Title 25, Division 1, Chapter 1, Subchapter 1, commencing with Section 1, for the erection, construction, reconstruction, movement, enlargement, conversion, alteration, repair, removal, demolition or arrangement of ~~apartment houses~~ apartments, condominiums, hotels, motels, lodging houses and dwellings, including accessory buildings, facilities and uses thereto.*

1.8.3.2.2 Mobilehome Parks Act. *Refer to the Mobilehome Parks Act, California Health and Safety Code, Division 13, Part 2.1, commencing with Section 18200 and California Code of Regulations, Title 25, Division 1, Chapter 2, commencing with Section 1000 for mobilehome park administrative and enforcement authority, permits, plans, fees, violations, inspections and penalties both within and outside mobilehome parks.*

Exception: *Mobilehome parks where the Department of Housing and Community Development is the enforcing agency.*

1.8.3.2.3 Special Occupancy Parks Act. *Refer to the Special Occupancy Parks Act, California Health and Safety Code, Division 13, Part 2.3, commencing with Section 18860 and California Code of Regulations, Title 25, Division 1, Chapter 2.2, commencing with Section 2000 for special occupancy park administrative and enforcement authority, permits, fees, violations, inspections and penalties both within and outside of special occupancy parks.*

Exception: *Special occupancy parks where the Department of Housing and Community Development is the enforcing agency.*

1.8.3.2.4 Employee Housing Act. *Refer to the Employee Housing Act, California Health and Safety Code, Division 13, Part 1, commencing with Section 17000 and California Code of Regulations, Title 25, Division 1, Chapter 1, Subchapter 3, commencing with Section 600 for employee housing administrative and enforcement authority, permits, fees, violations, inspections and penalties.*

1.8.3.2.5 Factory-Built Housing Law. *Refer to the Factory-Built Housing Law, California Health and Safety Code, Division 13, Part 6, commencing with Section 19960 and California Code of Regulations, Title 25, Division 1, Chapter 3, Subchapter 1, commencing with Section 3000 for factory-built housing administrative and enforcement authority, permits, fees, violations, inspections and penalties.*

SECTION 1.8.4
PERMITS, FEES, APPLICATIONS AND INSPECTIONS

1.8.4.1 Permits. *A written construction permit shall be obtained from the enforcing agency prior to the erection, construction, reconstruction, installation, moving or alteration of any building or structure.*

Exceptions:

1. *Work exempt from permits as specified in Chapter 1, Division II, Scope and Administration, Section 105.2.*
2. *Changes, alterations or repairs of a minor nature not affecting structural features, egress, sanitation, safety or accessibility as determined by the enforcing agency.*

Exemptions from permit requirements shall not be deemed to grant authorization for any work to be done in any manner in violation of other provisions of law or this code.

1.8.4.2 Fees. *Subject to other provisions of law, the governing body of any city, county, or city and county may prescribe fees to defray the cost of enforcement of rules and regulations promulgated by the Department of Housing and Community Development. The amount of the fees shall not exceed the amount reasonably necessary to administer or process permits, certificates, forms or other documents, or to defray the costs of enforcement. For additional information, see the State Housing Law, Health and Safety Code, Division 13, Part 1.5, Section 17951 and California Code of Regulations, Title 25, Division 1, Chapter 1, Subchapter 1, Article 3, commencing with Section 6.*

1.8.4.3 Plan review and time limitations. *Subject to other provisions of law, provisions related to plan checking, prohibition of excessive delays and contracting with or employment of private parties to perform plan checking are set forth in the State Housing Law, Health and Safety Code Section 17960.1, and for employee housing, in Health and Safety Code Section 17021.*

1.8.4.3.1 Retention of plans. *The building department of every city, county, or city and county shall maintain an official copy, microfilm, electronic or other type of photographic copy of the plans of every building, during the life of the building, for which the department issued a building permit.*

Exceptions:

1. *Single or multiple dwellings not more than two stories and basement in height.*
2. *Garages and other structures appurtenant to buildings listed in Exception 1.*
3. *Farm or ranch buildings appurtenant to buildings listed in Exception 1.*
4. *Any one-story building where the span between bearing walls does not exceed 25 feet (7620 mm), except a steel frame or concrete building.*

All plans for common interest developments as defined in Section ~~1351~~ 4100 of the California Civil Code shall be retained. For additional information regarding plan retention and reproduction of plans by an enforcing agency, see Health and Safety Code Sections 19850 through 19852.

1.8.4.4 Inspections. *Construction or work for which a permit is required shall be subject to inspection by the building official, and such construction or work shall remain accessible and exposed for inspection purposes until approved. Approval as a result of an inspection shall not be construed to be an approval of a violation of the provisions of this code or other regulations of the Department of Housing and Community Development. Required inspections are*

listed in Chapter 1, Division II, Scope and Administration, Sections 110.3.1 through 110.3.6, 110.3.8, 110.3.9 and 110.3.10.

SECTION 1.8.5
RIGHT OF ENTRY FOR ENFORCEMENT

1.8.5.1 General. *Subject to other provisions of law, officers and agents of the enforcing agency may enter and inspect public and private properties to secure compliance with the rules and regulations promulgated by the Department of Housing and Community Development. For limitations and additional information regarding enforcement, see the following:*

1. *For applications subject to the State Housing Law as referenced in Section 1.8.3.2.1 of this code, refer to Health and Safety Code, Division 13, Part 1.5, commencing with Section 17910 and California Code of Regulations, Title 25, Division 1, Chapter 1, Subchapter 1, commencing with Section 1.*
2. *For applications subject to the Mobilehome Parks Act as referenced in Section 1.8.3.2.2 of this code, refer to Health and Safety Code, Division 13, Part 2.1, commencing with Section 18200 and California Code of Regulations, Title 25, Division 1, Chapter 2, commencing with Section 1000.*
3. *For applications subject to the Special Occupancy Parks Act as referenced in Section 1.8.3.2.3 of this Code, refer to Health and Safety Code, Division 13, Part 2.3, commencing with Section 18860 and California Code of Regulations, Title 25, Division 1, Chapter 2.2, commencing with Section 2000.*
4. *For applications subject to the Employee Housing Act as referenced in Section 1.8.3.2.4 of this code, refer to Health and Safety Code, Division 13, Part 1, commencing with Section 17000 and California Code of Regulations, Title 25, Division 1, Chapter 1, Subchapter 3, commencing with Section 600.*
5. *For applications subject to the Factory-Built Housing Law as referenced in Section 1.8.3.2.5 of this code, refer to Health and Safety Code, Division 13, Part 6, commencing with Section 19960 and California Code of Regulations, Title 25, Division 1, Chapter 3, Subchapter 1, commencing with Section 3000.*

SECTION 1.8.6
LOCAL MODIFICATION BY ORDINANCE OR REGULATION

1.8.6.1 General. *Subject to other provisions of law, a city, county, or city and county may make changes to the provisions adopted by the Department of Housing and Community Development. If any city, county, or city and county does not amend, add or repeal by local ordinances or regulations the provisions published in this code or other regulations promulgated by the Department of Housing and Community Development, those provisions shall be applicable and shall become effective 180 days after publication by the California Building Standards Commission. Amendments, additions and deletions to this code adopted by a city, county, or city and county pursuant to California Health and Safety Code Sections 17958.5, 17958.7 and 18941.5, together with all applicable portions of this code, shall also become effective 180 days after publication of the California Building Standards Code by the California Building Standards Commission.*

1.8.6.2 Findings, filings and rejections of local modifications. *Prior to making any modifications or establishing more restrictive building standards, the governing body shall make express findings and filings, as required by California Health and Safety Code Section 17958.7, showing that such modifications are reasonably necessary due to local climatic, geological, or topographical conditions. No modification shall become effective or operative unless the following requirements are met:*

1. *The express findings shall be made available as a public record.*
2. *A copy of the modification and express finding, each document marked to cross-reference the other, shall be filed with the California Building Standards Commission for a city, county, or city and county and with the Department of Housing and Community Development for fire protection districts.*
3. *The California Building Standards Commission has not rejected the modification or change.*

Nothing in this section shall limit the authority of fire protection districts pursuant to California Health and Safety Code Section 13869.7(a).

SECTION 1.8.7
ALTERNATE MATERIALS, DESIGNS, TESTS AND METHODS OF CONSTRUCTION

1.8.7.1 General. *The provisions of this code, as adopted by the Department of Housing and Community Development, are not intended to prevent the use of any alternate material, appliance, installation, device, arrangement, design or method of construction not specifically prescribed by this code. Consideration and approval of alternates shall comply with Section 1.8.7.2 for local building departments and Section 1.8.7.3 for the Department of Housing and Community Development.*

1.8.7.2 Local building departments. *The building department of any city, county, or city and county may approve alternates for use in the erection, construction, reconstruction, movement, enlargement, conversion, alteration, repair, removal, demolition or arrangement of ~~an apartment house~~ apartments, condominiums, hotels, motels, lodging houses, dwellings, or ~~an~~ accessory structures, except for the following:*

1. *Structures located in mobilehome parks as defined in California Health and Safety Code Section 18214.*
2. *Structures located in special occupancy parks as defined in California Health and Safety Code Section 18862.43.*
3. *Factory-built housing as defined in California Health and Safety Code Section 19971.*

1.8.7.2.1 Approval of alternates. *The consideration and approval of alternates by a local building department shall comply with the following procedures and limitations:*

1. *The approval shall be granted on a case-by-case basis.*
2. *Evidence shall be submitted to substantiate claims that the proposed alternate, in performance, safety and protection of life and health, conforms to, or is at least equivalent to, the standards contained in this code and other rules and regulations promulgated by the Department of Housing and Community Development.*
3. *The local building department may require tests performed by an approved testing agency at the expense of the owner or owner's agent as proof of compliance.*
4. *If the proposed alternate is related to accessibility in covered multifamily dwellings or in facilities serving ~~"COVERED MULTIFAMILY DWELLINGS"~~ covered multifamily dwellings as defined in Chapter ~~11A~~ 2, the proposed alternate must also meet the threshold set for ~~"EQUIVALENT FACILITATION"~~ equivalent facilitation as defined in Chapter ~~11A~~ 2.*

For additional information regarding approval of alternates by a building department pursuant to the State Housing Law, see California Health and Safety Code Section 17951(e) and California Code of Regulations, Title 25, Division 1, Chapter 1, Subchapter 1.

1.8.7.3 Department of Housing and Community Development. *The Department of Housing and Community Development may approve alternates for use in the erection, construction, reconstruction, movement, enlargement, conversion, alteration, repair, removal or demolition of ~~an apartment house~~ apartments, condominiums, hotels, motels, lodging houses, dwellings or an accessory thereto and permanent buildings in mobilehome parks and special occupancy parks. The consideration and approval of alternates shall comply with the following:*

1. *The department may require tests at the expense of the owner or owner's agent to substantiate compliance with the California Building Standards Code.*
2. *The approved alternate shall, for its intended purpose, be at least equivalent in performance and safety to the materials, designs, tests or methods of construction prescribed by this code.*

SECTION 1.8.8
APPEALS BOARD

1.8.8.1 General. *Every city, county, or city and county shall establish a process to hear and decide appeals of orders, decisions, and determinations made by the enforcing agency relative to the application and interpretation of this code and other regulations governing construction, use, maintenance and change of occupancy. The governing body of any city, county, or city and county may establish a local appeals board and a housing appeals board to serve this purpose. Members of the appeals board(s) shall not be employees of the enforcing agency and shall be knowledgeable in the applicable building codes, regulations and ordinances as determined by the governing body of the city, county, or city and county.*

Where no such appeals boards or agencies have been established, the governing body of the city, county, or city and county shall serve as the local appeals board or housing appeals board as specified in California Health and Safety Code Sections 17920.5 and 17920.6.

1.8.8.2 Definitions. *The following terms shall for the purposes of this section have the meaning shown.*

HOUSING APPEALS BOARD. *The board or agency of a city, county, or city and county which is authorized by the governing body of the city, county, or city and county to hear appeals regarding the requirements of the city, county, or city and county relating to the use, maintenance and change of occupancy of buildings and structures, including requirements governing alteration, additions, repair, demolition and moving. In any area in which there is no such board or agency, "Housing Appeals Board" means the local appeals board having jurisdiction over the area.*

LOCAL APPEALS BOARD. *The board or agency of a city, county, or city and county which is authorized by the governing body of the city, county, or city and county to hear appeals regarding the building requirements of the city, county, or city and county. In any area in which there is no such board or agency, "Local Appeals Board" means the governing body of the city, county, or city and county having jurisdiction over the area.*

1.8.8.3 Appeals. *Except as otherwise provided in law, any person, firm or corporation adversely affected by a decision, order or determination by a city, county, or city and county relating to the application of building standards published in the California Building Standards Code, or any other applicable rule or regulation adopted by the Department of Housing and Community Development, or any lawfully enacted ordinance by a city, county, or city and county, may appeal the issue for resolution to the local appeals board or housing appeals board as appropriate.*

The local appeals board shall hear appeals relating to new building construction and the housing appeals board shall hear appeals relating to existing buildings.

SECTION 1.8.9
UNSAFE BUILDINGS OR STRUCTURES

1.8.9.1 Authority to enforce. *Subject to other provisions of law, the administration, enforcement, actions, proceedings, abatement, violations and penalties for unsafe buildings and structures are contained in the following statutes and regulations:*

1. *For applications subject to the State Housing Law as referenced in Section 1.8.3.2.1 of this code, refer to Health and Safety Code, Division 13, Part 1.5, commencing with Section 17910 and California Code of Regulations, Title 25, Division 1, Chapter 1, Subchapter 1, commencing with Section 1.*
2. *For applications subject to the Mobilehome Parks Act as referenced in Section 1.8.3.2.2 of this code, refer to Health and Safety Code, Division 13, Part 2.1, commencing with Section 18200 and California Code of Regulations, Title 25, Division 1, Chapter 2, commencing with Section 1000.*
3. *For applications subject to the Special Occupancy Parks Act as referenced in Section 1.8.3.2.3 of this code, refer to Health and Safety Code, Division 13, Part 2.3, commencing with Section 18860 and California Code of Regulations, Title 25, Division 1, Chapter 2.2, commencing with Section 2000.*
4. *For applications subject to the Employee Housing Act as referenced in Section 1.8.3.2.4 of this code, refer to Health and Safety Code, Division 13, Part 1, commencing with Section 17000 and California Code of Regulations, Title 25, Division 1, Chapter 1, Subchapter 3, commencing with Section 600.*
5. *For applications subject to the Factory-Built Housing Law as referenced in Section 1.8.3.2.5 of this code, refer to Health and Safety Code, Division 13, Part 6, commencing with Section 19960 and California Code of Regulations, Title 25, Division 1, Chapter 3, Subchapter 1, commencing with Section 3000.*

1.8.9.2 Actions and proceedings. *Subject to other provisions of law, punishments, penalties and fines for violations of building standards are contained in the following statutes and regulations:*

1. *For applications subject to the State Housing Law as referenced in Section 1.8.3.2.1 of this code, refer to Health and Safety Code, Division 13, Part 1.5, commencing with Section 17910 and California Code of Regulations, Title 25, Division 1, Chapter 1, Subchapter 1, commencing with Section 1.*
2. *For applications subject to the Mobilehome Parks Act as referenced in Section 1.8.3.2.2 of this code, refer to Health and Safety Code, Division 13, Part 2.1, commencing with Section 18200 and California Code of Regulations, Title 25, Division 1, Chapter 2, commencing with Section 1000.*

3. *For applications subject to the Special Occupancy Parks Act as referenced in Section 1.8.3.2.3 of this code, refer to Health and Safety Code, Division 13, Part 2.3, commencing with Section 18860 and California Code of Regulations, Title 25, Division 1, Chapter 2.2, commencing with Section 2000.*

4. *For applications subject to the Employee Housing Act as referenced in Section 1.8.3.2.4 of this code, refer to Health and Safety Code, Division 13, Part 1, commencing with Section 17000 and California Code of Regulations, Title 25, Division 1, Chapter 1, Subchapter 3, commencing with Section 600.*

5. *For applications subject to the Factory-Built Housing Law as referenced in Section 1.8.3.2.5 of this code, refer to Health and Safety Code, Division 13, Part 6, commencing with Section 19960 and California Code of Regulations, Title 25, Division 1, Chapter 3, Subchapter 1, commencing with Section 3000.*

SECTION 1.8.10
OTHER BUILDING REGULATIONS

~~***1.8.10.1 Existing structures.*** *Subject to the requirements of California Health and Safety Code Sections 17912, 17920.3, 17922, 17922.3, 17958.8 and 17958.9, the provisions contained in Chapter 34 relating to existing structures shall only apply as identified in the Matrix Adoption Table under the authority of the Department of Housing and Community Development as listed in Sections 1.8.2.1.1 through 1.8.2.1.3 of this code.*~~

1.8.10.1 Existing structures. *Notwithstanding other provisions of law, the replacement, retention, and extension of original materials and the use of original methods of construction for any existing building or accessory structure, or portions thereof, shall be permitted in accordance with the provisions of this code and the California Existing Building Code, as adopted by the Department of Housing and Community Development. For additional information, see California Health and Safety Code, Sections 17912, 17920.3, 17922 and 17958.8.*

~~***1.8.10.2 Moved structures.*** *Subject to the requirements of California Health and Safety Code Sections 17922.3 and 17958.9, the provisions contained in Chapter 34 relating to a moved residential structure shall only apply as identified in the Matrix Adoption Table under the authority of the Department of Housing and Community Development as listed in Sections 1.8.2.1.1 through 1.8.2.1.3 of this code.*~~

1.8.10.2 Moved structures. *Subject to the requirements of California Health and Safety Code Sections 17922, 17922.3 and 17958.9, local ordinances or regulations relating to a moved residential building or accessory structure thereto, shall permit the replacement, retention, and extension of original materials and the use of original methods of construction so long as the structure does not become or continue to be a substandard building.*

NOTE:
Authority Cited: Health and Safety Code Sections 17040, 17050, 17920.9, 17921, 17921.3, 17921.6, 17921.10, 17922, 17922.6, 17922.12, 17927, 17928, 17959.6, 18300, 18552, 18554, 18620, 18630, 18640, 18670, 18690, 18691, 18865, 18871.3, 18871.4, 18873, 18873.1, 18873.2, 18873.3, 18873.4, 18873.5, 18938.3, 18944.11 and 19990; and Government Code Section 12955.1.

Reference: Health and Safety Code Sections 17000 through 17062.5, 17910 through 17995.5, 18200 through 18700, 18860 through 18874, and 19960 through 19997; and Government Code Sections 12955.1 and 12955.1.1.

---

2. HCD proposes to adopt Chapter 1, Division II, Sections 105.2 (Building: 1 – 13 only), 107.1, 107.2.1, 107.2.3, 107.2.4, 107.2.5, 107.2.5.1, 107.2.6, 110.3.1, 110.3.2, 110.3.3, 110.3.4, 110.3.5, 110.3.6, 110.3.8, 110.3.9, 110.3.10, and 110.3.10.1 from the 2015 International Building Code into the 2016 California Building Code, and to bring forward existing California amendments as follows:

DIVISION II
SCOPE AND ADMINISTRATION

110.3.4 Frame inspection. ... (No change to text)

110.3.4.1 (HCD 1) Moisture content verification. *Moisture content of framing members shall be verified in accordance with the California Green Building Standards Code (CALGreen), Chapter 4, Division 4.5.*

110.3.10 Final inspection. ... (No change to text)

110.3.10.1 Flood hazard documentation. ... (No change to text)

110.3.10.2 (HCD 1) Operation and maintenance manual. *At the time of final inspection, a manual, compact disc, web-based reference or other media acceptable to the enforcing agency shall be placed in the building in accordance with the California Green Building Standards Code (CALGreen), Chapter 4, Division 4.4.*

NOTE:
Authority Cited: Health and Safety Code Sections 17040, 17050, 17920.9, 17921, 17921.3, 17921.6, 17921.10, 17922, 17922.6, 17922.12, 17927, 17928, 17959.6, 18300, 18552, 18554, 18620, 18630, 18640, 18670, 18690, 18691, 18865, 18871.3, 18871.4, 18873, 18873.1, 18873.2, 18873.3, 18873.4, 18873.5, 18938.3, 18944.11 and 19990; and Government Code Section 12955.1.

Reference: Health and Safety Code Sections 17000 through 17062.5, 17910 through 17995.5, 18200 through 18700, 18860 through 18874, and 19960 through 19997; and Government Code Sections 12955.1 and 12955.1.1.

---

3. HCD proposes to adopt Chapter 2 from the 2015 International Building Code into the 2016 California Building Code with new, existing, and modified existing amendments as follows:

CHAPTER 2
DEFINITIONS

SECTION 201
GENERAL

201.3 Terms defined in other codes. Where terms are not defined in this code and are defined in the ~~International Energy Conservation Code, International Fuel Gas Code,~~ ~~International~~ *California Residential Code*, *California Electrical Code*, *California Existing Building Code*, *California Green Building Standards Code*, *California* Fire Code, ~~International~~ *California* Mechanical Code or ~~International~~ *California* Plumbing Code, such terms shall have the meanings ascribed to them as in those codes.

SECTION 202
DEFINITIONS

ACCESSIBILITY. *The combination of various elements in a building, facility, site, or area, or portion thereof, which allows access, circulation and the full use of the building and facilities by persons with disabilities in compliance with this code.*

ACCESSIBLE. *A site, building, facility, or portion thereof that is approachable and usable by persons with disabilities in compliance with this code.*

ACCESSIBLE ROUTE. *A continuous unobstructed path connecting accessible elements and spaces of an accessible site, building or facility that can be negotiated by a person with a disability using a wheelchair, and that is also safe for and usable by persons with other disabilities. Interior accessible routes may include corridors, hallways, floors, ramps, elevators and lifts. Exterior accessible routes may include parking access aisles, curb ramps, crosswalks at vehicular ways, walks, ramps and lifts.*

ACCESSIBLE SPACE. *A space that complies with the accessibility provisions of this code.*

ADAPTABLE DWELLING UNIT. (HCD 1-AC) *An accessible dwelling unit within a covered multifamily building as designed with elements and spaces allowing the dwelling unit to be adapted or adjusted to accommodate the user. See Chapter 11A, Division IV.*

APPROVED. Acceptable to the building official.

(HCD 1 & HCD 2) "Approved" means meeting the approval of the enforcing agency, except as otherwise provided by law, when used in connection with any system, material, type of construction, fixture or appliance as the result of investigations and tests conducted by the agency, or by reason of accepted principles or tests by national authorities or technical, health or scientific organizations or agencies.

Notes: (HCD 1 & HCD 2)

1. *See Health and Safety Code Section 17920 for "Approved" as applied to residential construction and buildings or structures accessory thereto, as referenced in Section 1.8.2.1.1.*
2. *See Health and Safety Code Section 17921.1 for "Approved" as applied to the use of hotplates in residential construction referenced in Section 1.8.2.1.1.*
3. *See Health and Safety Code Section 19966 for "Approved" as applied to factory-built housing as referenced in Section 1.8.3.2.5.*
4. *See Health and Safety Code Section 18201 for "Approved" as applied to mobilehome parks as referenced in Section 1.8.2.1.3.*
5. *See Health and Safety Code Section 18862.1 for "Approved" as applied to special occupancy parks as referenced in Section 1.8.2.1.3.*

APPROVED AGENCY. An established and recognized agency that is regularly engaged in conducting tests or furnishing inspection services, when such agency has been approved by the building official.

(HCD 1 & HCD 2) "Approved agency" shall mean "Listing agency" and "Testing agency."

APPROVED LISTING AGENCY. (HCD 1 & HCD 2) *Any agency approved by the enforcing agency, unless otherwise provided by law, which is in the business of listing and labeling and which makes available at least an annual published report of such listings in which specific information is included that the product has been tested to recognized standards and found to comply.*

APPROVED TESTING AGENCY. (HCD 1 & HCD 2) *Any agency, which is determined by the enforcing agency, except as otherwise provided by law, to have adequate personnel and expertise to carry out the testing of systems, materials, types of construction, fixtures or appliances.*

ASSISTIVE DEVICE. (HCD 1-AC) *An aid, tool or instrument used by persons with disabilities to assist in activities of daily living.*

AUTOMATIC DOOR. *A door equipped with a power-operated mechanism and controls that open and close the door automatically upon receipt of a momentary actuating signal. The switch that begins the automatic cycle may be a photoelectric device, floor mat or manual switch.*

BATHROOM. *For the purposes of Chapter 11A, a room which includes a water closet (toilet), a lavatory, and a bathtub and/or a shower. It does not include single-fixture facilities or those with only a water closet and lavatory. It does include a compartmented bathroom. A compartmented bathroom is one in which the fixtures are distributed among interconnected rooms. A compartmented bathroom is considered a single unit and is subject to the requirements of Chapter 11A.*

BUILDING. Any structure used or intended for supporting or sheltering any use or occupancy.

Exception: (HCD 1, HCD 2 & HCD 1-AC) *For applications listed in Section 1.8.2 regulated by the Department of Housing and Community Development, "Building" shall not include the following:*

1. *Any mobilehome as defined in Health and Safety Code Section 18008.*
2. *Any manufactured home as defined in Health and Safety Code Section 18007.*
3. *Any commercial modular as defined in Health and Safety Code Section 18001.8 or any special purpose commercial modular as defined in Section 18012.5.*
4. *Any recreational vehicle as defined in Section Health and Safety Code 18010.*

5. Any multifamily manufactured home as defined in Health and Safety Code Section 18008.7.

For additional information, see Health and Safety Code Section 18908.

Note: *Building shall have the same meaning as defined in Health and Safety Code section 17920 and 18908 for the applications specified in Section 1.11.*

BUILDING ENTRANCE ON AN ACCESSIBLE ROUTE. (HCD 1-AC) *An accessible entrance to a building that is connected by an accessible route to public transportation stops, to parking or passenger loading zones, or to public streets or sidewalks, if available.*

BUILDING, EXISTING. (HCD 1 & HCD 2) *A building erected prior to the adoption of this code, or one for which a legal building permit has been issued.*

CELLULAR CONCRETE. (HCD 1 & HCD 2) *A lightweight product consisting of portland cement and selected gas-forming chemicals or foaming agents which create homogeneous voids in the hardened concrete.*

CHARACTERS. *Letters, numbers, punctuation marks and typographic symbols.*

CLEAR FLOOR SPACE. (HCD 1-AC) *The minimum unobstructed floor or ground space required to accommodate a single, stationary wheelchair and occupant.*

COMMON USE AREAS. (HCD 1-AC) *Private use areas within multifamily residential facilities where the use of these areas is limited exclusively to owners, residents and their guests. The areas may be defined as rooms or spaces or elements inside or outside of a building.*

COVERED MULTIFAMILY DWELLINGS. (HCD 1-AC) ~~*Dwelling units in buildings consisting of 3 or more dwelling units or 4 or more condominium units. Covered multifamily dwellings include dwelling units listed in Section 1102A.1. Dwelling units within a single structure separated by firewalls do not constitute separate buildings.*~~

~~***Note:*** *For buildings or complexes containing public housing, see Chapter 11B for provisions of the Division of the State Architect–Access Compliance (DSA-AC).*~~

"Covered multifamily dwellings" means either of the following:

1. Buildings that consist of at least four condominium dwelling units or at least three apartment dwelling units if the buildings have at least one elevator.

2. The ground floor dwelling units in buildings that consist of at least four condominium dwelling units or at least three apartment dwelling units if the building does not have an elevator.

Covered multifamily dwellings include dwellings listed in Section 1102A.1. For purposes of this definition, dwelling units within a single structure separated by firewalls do not constitute separate buildings.

CROSS SLOPE. (HCD 1-AC) *The slope that is perpendicular to the direction of travel. (As differentiated from the definition of "Running Slope".)*

CURB CUT. *An interruption of a curb at a pedestrian way, which separates surfaces that are substantially at the same elevation.*

CURB RAMP. *A sloping pedestrian way, intended for pedestrian traffic, which provides access between a walk or sidewalk and a surface located above or below an adjacent curb face.*

DEPARTMENT. (HCD 1 & HCD 2) *The Department of Housing and Community Development.*

DETACHED SINGLE-FAMILY DWELLING. (HCD 1 & HCD 2) *Any single-family dwelling which is separated (detached) from adjacent buildings.*

DETECTABLE WARNING. *A standardized surface feature built in or applied to walking surfaces or other elements to warn of hazards on a circulation path.*

DIRECTIONAL SIGN. (HCD 1 & HCD 2) *A publicly displayed notice which indicates by use of words or symbols a*

recommended direction or route of travel.

DWELLING UNIT. A single unit providing complete, independent living facilities for one or more persons, including permanent provisions for living, sleeping, eating, cooking and sanitation.

(HCD 1-AC) *For the purposes of Chapter 11A, a single unit of residence for a family of one or more persons. Examples of dwelling units covered by Chapter 11A include condominiums, an apartment unit within an apartment building, and other types of dwellings in which sleeping accommodations are provided but toileting or cooking facilities are shared by occupants of more than one room or portion of the dwelling. Examples of the latter include dormitory rooms and sleeping accommodations in shelters intended for occupancy as residences for homeless persons.*

EFFICIENCY DWELLING UNIT. (HCD 1) *A dwelling unit containing only one habitable room and includes an efficiency unit as defined by Health and Safety Code Section 17958.1. See Section 1208.4.*

ELEVATOR, PASSENGER. (HCD 1 & HCD 2) *See "PASSENGER ELEVATOR."*

ENFORCEMENT. (HCD 1 & HCD 2) *The applicable section of the Health and Safety Code is repeated here for clarity and reads as follows:*

> ***Section 17920.*** *"Enforcement" means diligent effort to secure compliance, including review of plans and permit applications, response to complaints, citation of violations, and other legal process. Except as otherwise provided in this part, "Enforcement" may, but need not, include inspections of existing buildings on which no complaint or permit application has been filed, and effort to secure compliance as to these existing buildings.*

ENFORCING AGENCY. (HCD 1 & HCD 2) *The designated department or agency as specified by statute or regulation.*

ENTRANCE. *Any access point to a building or portion of a building or facility used for the purpose of entering. An entrance includes the approach walk, the vertical access leading to the entrance platform, the entrance platform itself, vestibule if provided, the entry door or gate, and the hardware of the entry door or gate.*

EQUIVALENT FACILITATION. *The use of designs, products or technologies as alternatives to those prescribed, resulting in substantially equivalent or greater accessibility and usability.*

Note: *In determining equivalent facilitation, consideration shall be given to means that provide for the maximum independence of persons with disabilities while presenting the least risk of harm, injury or other hazard to such persons or others.*

FAMILY (HCD 1). *An individual or two or more persons who are related by blood or marriage; or otherwise live together in a dwelling unit.*

GRAB BAR. *A bar for the purpose of being grasped by the hand for support.*

GRADE. (Adjacent Ground Elevation) (HCD 1-AC)*The lowest point of elevation of the finished surface of the ground, paving or sidewalk within the area between the building and the property line or, when the property line is more than 5 feet (1524 mm) from the building, between the building and a line 5 feet (1524 mm) from the building. See Health and Safety Code Section 19955.3(d).*

GROUND FLOOR. *The floor of a building with a building entrance on an accessible route. A building may have one or more ground floors.*

GUARD ***(HCD 1, & HCD 2 & HCD 1-AC) OR GUARDRAIL.*** A building component or a system of building components located at or near the open sides of elevated walking surfaces that minimizes the possibility of a fall from the walking surface to a lower level.

HOUSING AT A PLACE OF EDUCATION. *Housing operated by or on behalf of an elementary, secondary, undergraduate, or postgraduate school, or other place of education, including dormitories, suites, apartments, or other places of residence.*

HOTEL OR MOTEL. (HCD 1 & HCD 2) *Any building containing six or more guest rooms intended or designed to be used, or which are used, rented or hired out to be occupied, or which are occupied for sleeping purposes by guests.*

INTERNATIONAL SYMBOL OF ACCESSIBILITY. *The symbol adopted by Rehabilitation International's 11th World Congress for the purpose of indicating that buildings and facilities are accessible to persons with disabilities.*
KICK PLATE. *An abrasion-resistant plate affixed to the bottom portion of a door to prevent a trap condition and protect its surface.*

LABELED. Equipment, materials or products to which have been affixed a label, seal, symbol or other identifying mark of a nationally recognized testing laboratory, inspection agency or other organization concerned with product evaluation that maintains periodic inspection of the production of the above-labeled items and whose labeling indicates either that the equipment, material or product meets identified standards or has been tested and found suitable for a specified purpose.

(HCD 1 & HCD 2) *"Labeled" means equipment or materials to which has been attached a label, symbol or other identifying mark of an organization, approved by the Department, that maintains a periodic inspection program of production of labeled products, installations, equipment, or materials and by whose labeling the manufacturer indicates compliance with appropriate standards or performance in a specified manner.*

LAVATORY. *A fixed bowl or basin with running water and drainpipe, as in a toilet or bathing facility, for washing or bathing purposes. (As differentiated from the definition of "Sink".)*

LEVEL AREA. (HCD 1-AC) *A specified surface that does not have a slope in any direction exceeding 1/4 inch (6.4 mm) in 1 foot (305 mm) from the horizontal (2.083-percent gradient).*

LIFT, PLATFORM (WHEELCHAIR). (HCD 1-AC) *See "Platform (Wheelchair) Lift".*

LISTED. Equipment, materials, products or services included in a list published by an organization acceptable to the code official and concerned with evaluation of products or services that maintains periodic inspection of production of listed equipment or materials or periodic evaluation of services and whose listing states either that the equipment, material, product or service meets identified standards or has been tested and found suitable for a specified purpose.

(HCD 1 & HCD 2) *"Listed" means all products that appear in a list published by an approved testing or listing agency. For additional information, see Health and Safety Code Section 17920(h).*

LISTING AGENCY. (HCD 1 & HCD 2) *An agency approved by the department that is in the business of listing and labeling products, materials, equipment and installations tested by an approved testing agency, and that maintains a periodic inspection program on current production of listed products, equipment and installations, and that, at least annually, makes available a published report of these listings. For additional information, see Health and Safety Code Section 17920(i).*

LOBBY. (HCD 1 & HCD 2) *An area not defined as a waiting room at the entrance of a building through which persons must pass.*

LODGING HOUSE. (HCD 1 & HCD 1-AC) *Any building or portion thereof containing not more than five guest rooms where rent is paid in money, goods, labor or otherwise, and that is occupied by the proprietor as the residence of such proprietor.*

MARKED CROSSING. *A crosswalk or other identified marked path intended for pedestrian use in crossing a vehicular way.*

MOTEL. (HCD 1 & HCD 2) *See Hotel or Motel.*

MULTISTORY DWELLING UNIT. (HCD 1-AC) *A dwelling unit with finished living space located on one floor and the floor or floors immediately above or below it.*

NEWLY CONSTRUCTED. (HCD 1-AC) *A building that has never before been used or occupied for any purpose.*

NORMAL. (HCD 1 & HCD 2) *Conforming to a pattern or standard regarded as usual or typical.*

OPEN RISER. *The space between two adjacent stair treads not closed by a riser.*

OPERABLE PART. *A component of an element used to insert or withdraw objects, or to activate, deactivate, or adjust the element.*

PASSAGE DOOR. (HCD 1-AC) *A door other than an exit door through which persons may traverse.*

PASSENGER ELEVATOR. (HCD 1 & HCD 2) *~~"Passenger Elevator" is an~~ An elevator used primarily to carry ~~persons~~ passengers. For additional information, see California Code of Regulations, Title 8, Division 1, Chapter 4.*

PASSIVE SOLAR ENERGY COLLECTOR. (HCD 1 & HCD 2) *Uses architectural components, rather than mechanical components, to provide heating or cooling for a building interior.*

PEDESTRIAN. (HCD 1-AC) *An individual who moves within walking areas with or without the use of walking-assistive devices such as crutches, leg braces, wheelchairs, white cane, service animal, etc.*

PEDESTRIAN WAY. *A route by which a pedestrian may pass.*

PERSONS WITH DISABLITIES. (HCD 1-AC) *For purposes of Chapter 11A, "Persons with Disabilities" includes, but is not limited to, any physical or mental disability as defined in Government Code Section 12926.*

PICTOGRAM. *A pictorial symbol that represents activities, facilities, or concepts.*

PLACE OF PUBLIC ACCOMMODATION. *A facility operated by a private entity whose operations affect commerce and fall within at least one of the following categories:*

(1) Place of lodging, except for an establishment located within a facility that contains not more than five rooms for rent or hire and that actually is occupied by the proprietor of the establishment as the residence of the proprietor. For purposes of this code, a facility is a "place of lodging" if it is:

(i) An inn, hotel, or motel; or

(ii) A facility that:

(A) Provides guest rooms for sleeping for stays that primarily are short-term in nature (generally 30 days or less) where the occupant does not have the right to return to a specific room or unit after the conclusion of his or her stay; and

(B) Provides guest rooms under conditions and with amenities similar to a hotel, motel, or inn, including the following:

(1) On- or off-site management and reservations service;

(2) Rooms available on a walk-up or call-in basis;

(3) Availability of housekeeping or linen service; and

(4) Acceptance of reservations for a guest room type without guaranteeing a particular unit or room until check-in, and without a prior lease or security deposit.

(2) A restaurant, bar, or other establishment serving food or drink;

(3) A motion picture house, theater, concert hall, stadium, or other place of exhibition or entertainment;

(4) An auditorium, convention center, lecture hall, or other place of public gathering;

(5) A bakery, grocery store, clothing store, hardware store, shopping center, or other sales or rental establishment;

(6) A laundromat, dry-cleaner, bank, barber shop, beauty shop, travel service, shoe repair service, funeral parlor, gas station, office of an accountant or lawyer, pharmacy, insurance office, professional office of a health care provider, hospital, or other service establishment;

(7) A terminal, depot, or other station used for specified public transportation;

(8) A museum, library, gallery, or other place of public display or collection;

(9) A park, zoo, amusement park, or other place of recreation;

(10) A nursery, elementary, secondary, undergraduate, or postgraduate private school, or other place of education;

(11) A day care center, senior citizen center, homeless shelter, food bank, adoption agency, or other social service center establishment; and

(12) A gymnasium, health spa, bowling alley, golf course, or other place of exercise or recreation;

(13) A religious facility;

(14) An office building;

(15) A public curb or sidewalk.

PLATFORM (WHEELCHAIR) LIFT. *A hoisting and lowering mechanism equipped with a car or platform, or support, which serves two landings of a building or structure and is designed to carry a passenger or passengers and/or luggage or other material a vertical distance as may be allowed.*

POWDER ROOM. *A room containing a water closet (toilet) and a lavatory, and which is not defined as a bathroom.*

PRIMARY ENTRY. (HCD 1-AC) *The principal entrance through which most people enter the building, as designated by the building official.*

PRIMARY ENTRY LEVEL. (HCD 1-AC) *The floor or level of the building on which the primary entry is located.*

PUBLIC ENTITY. *Any State or local government; any department, agency, special-purpose district, or other instrumentality of a State or local government.*

PUBLIC HOUSING. *Housing facilities owned and/or operated by, for or on behalf of a public entity including but not limited to the following:*

1. *Publically owned and/or operated one- or two- family dwelling units or congregate residences;*
2. *Publically owned and/or operated buildings or complexes with three or more residential dwellings units;*
3. *Reserved*
4. *Publically owned and/or operated homeless shelters, group homes and similar social service establishments;*
5. *Publically owned and/or operated transient lodging, such as hotels, motels, hostels and other facilities providing accommodations of a short term nature of not more than 30 days duration;*
6. *Housing at a place of education owned or operated by a public entity, such as housing on or serving a public school, public college or public university campus;*
7. *Privately owned housing made available for public use as housing.*

PUBLIC USE AREAS. (HCD 1-AC) *Interior or exterior rooms or spaces of a building or facility that are made available to the general public and do not include common use areas. Public use areas may be provided at a building or facility that is privately or publicly owned.*

RECOMMEND. (HCD 1 & HCD 2) *Does not require mandatory acceptance, but identifies a suggested action that shall be considered for the purpose of providing a greater degree of accessibility to persons with disabilities.*

RISER. *The upright part between two adjacent stair treads.*

RUNNING SLOPE. *The slope that is parallel to the direction of travel. (As differentiated from the definition of "Cross Slope".)*

SANITARY FACILITY. (HCD 1 & HCD 1-AC) *Any single water closet, urinal, lavatory, bathtub or shower, or a combination thereof, together with the room or space in which they are housed.*

SHOULD. (HCD 1 & HCD 2) *See "Recommend."*

SIDEWALK. *A surfaced pedestrian way contiguous to a street used by the public. (As differentiated from the definition of "Walk.")*

SINGLE-ACCOMMODATION SANITARY FACILITY. (HCD 1-AC) *A room that has not more than one of each type of sanitary fixture, is intended for use by only one person at a time, has no partition around the toilet, and has a door that can be locked on the inside by the room occupant.*

SITE DEVELOPMENT. (HCD 1-AC) *"On-site" and "Off-site" work, including, but not limited to, walks, sidewalks, ramps, curbs, curb ramps, parking facilities, stairs, planting areas, pools, promenades, exterior gathering or assembly areas and raised or depressed paved areas.*

SINK. *A fixed bowl or basin with running water and drainpipe, as in a kitchen or laundry, for washing dishes, clothing, etc. (As differentiated from the definition of "Lavatory".)*

SLEEPING ACCOMMODATIONS. *Rooms intended and designed for sleeping.*

SLOPE. (HCD 1-AC) *The relative steepness of the land between two points and is calculated as follows:*

The horizontal distance and elevation change between the two points (e.g., an entrance and a passenger loading zone). The difference in elevation is divided by the distance and the resulting fraction is multiplied by 100 to obtain the percentage of slope.

For example: if a principal entrance is 10 feet (3048 mm) from a passenger loading zone, and the principal entrance is raised 1 foot (305 mm) higher than the passenger loading zone, then the slope is 1/10 100 = 10 percent.

SPACE. *A definable area, e.g., a room, toilet room, hall, assembly area, entrance, storage room, alcove, courtyard, or lobby.*

TACTILE. *An object that can be perceived using the sense of touch.*

TACTILE SIGN. *A sign containing raised characters and/or symbols and accompanying Braille.*

TEXT TELEPHONE. *Machinery or equipment that employs interactive text-based communications through the transmission of coded signals across the standard telephone network. Text telephones can include, for example, devices known as TTYs (teletypewriters) or computers.*

TESTING AGENCY. (HCD 1 & HCD 2) *An agency approved by the department as qualified and equipped for testing of products, materials, equipment and installations in accordance with nationally recognized standards. For additional information, see Health and Safety Code Section 17920(m).*

TRANSIENT LODGING. *A building or facility containing one or more guest room(s) for sleeping that provides accommodations that are primarily short-term in nature. Transient lodging does not include residential dwelling units intended to be used as a residence, inpatient medical care facilities, licensed long-term care facilities, detention or correctional facilities, or private buildings or facilities that contain no more than five rooms for rent or hire and that are actually occupied by the proprietor as the residence of such proprietor.*

TREAD. *The horizontal part of a step.*

TTY. *An abbreviation for teletypewriter. Machinery that employs interactive text-based communication through the transmission of coded signals across the telephone network. TTYs may include, for example, devices known as TDDs (telecommunication display devices or telecommunication devices for deaf persons) or computers with special modems. TTYs are also called text telephones.*

UNREASONABLE HARDSHIP. *When the enforcing agency finds that compliance with the building standard would make the specific work of the project affected by the building standard infeasible, based on an overall evaluation of the following factors:*

1. *The cost of providing access.*
2. *The cost of all construction contemplated.*
3. *The impact of proposed improvements on financial feasibility of the project.*

4. *The nature of the accessibility, which would be gained or lost.*

5. *The nature of the use of the facility under construction and its availability to persons with disabilities.*

The details of any finding of unreasonable hardship shall be recorded and entered in the files of the enforcing agency.

VEHICULAR OR PEDESTRIAN ARRIVAL POINTS. (HCD 1-AC) *Public or resident parking areas, public transportation stops, passenger loading zones, and public streets or sidewalks.*

VEHICULAR WAY. *A route provided for vehicular traffic, such as in a street, driveway, or parking facility.*

WALK. (HCD 1-AC) *A surfaced pedestrian way not located contiguous to a street used by the public. (See definition for "Sidewalk.")*

WHEELCHAIR. (HCD 1-AC) *A chair mounted on wheels to be propelled by its occupant manually or with the aid of electric power, of a size and configuration conforming to the recognized standard models of the trade.*

NOTE:
Authority Cited: Health and Safety Code Sections 17040, 17050, 17920.9, 17921, 17921.3, 17921.6, 17921.10, 17922, 17922.6, 17922.12, 17927, 17928, 17959.6, 18300, 18552, 18554, 18620, 18630, 18640, 18670, 18690, 18691, 18865, 18871.3, 18871.4, 18873, 18873.1, 18873.2, 18873.3, 18873.4, 18873.5, 18938.3, 18944.11 and 19990; and Government Code Section 12955.1.

Reference: Health and Safety Code Sections 17000 through 17062.5, 17910 through 17995.5, 18200 through 18700, 18860 through 18874, and 19960 through 19997; and Government Code Sections 12955.1 and 12955.1.1.

---

4. HCD proposes to not adopt the following Chapter 2 definitions from the 2015 International Building Code:

~~**ACCESSIBLE.** A site, building, facility or portion thereof that complies with Chapter 11.~~

~~**ACCESSIBLE ROUTE.** A continuous, unobstructed path that complies with Chapter 11.~~

~~**ACCESSIBLE UNIT.** A dwelling unit or sleeping unit that complies with this code and the provisions for Accessible units in ICC A117.1.~~

~~**COMMON USE.** Interior or exterior circulation paths, rooms, spaces or elements that are not for public use and are made available for the shared use of two or more people.~~

CONCRETE.
.... (No change to text)
Cellular. ~~A lightweight insulating concrete made by mixing a preformed foam with Portland cement slurry and having a dry unit weight of approximately 30 pcf (480 kg/m3).~~ ***See CELLULAR CONCRETE.***

~~**DETECTABLE WARNING.** A standardized surface feature built in or applied to walking surfaces or other elements to warn visually impaired persons of hazards on a circulation path.~~

~~**INTENDED TO BE OCCUPIED AS A RESIDENCE.** This refers to a dwelling unit or sleeping unit that can or will be used all or part of the time as the occupant's place of abode.~~

~~**LODGING HOUSE.** A one-family dwelling where one or more occupants are primarily permanent in nature and rent is paid for guest rooms.~~

~~**MULTILEVEL ASSEMBLY SEATING.** Seating that is arranged in distinct levels where each level is comprised of either multiple rows, or a single row of box seats accessed from a separate level.~~

~~**MULTISTORY UNITS.** A dwelling unit or sleeping unit with habitable space located on more than one story.~~

~~**PUBLIC USE AREAS.** Interior or exterior rooms or spaces that are made available to the general public.~~

~~**SELF-SERVICE STORAGE FACILITY.** Real property designed and used for the purpose of renting or leasing individual storage spaces to customers for the purpose of storing and removing personal property on a self-service basis.~~

~~**TYPE A UNIT.** A dwelling unit or sleeping unit designed and constructed for accessibility in accordance with this code and the provisions for Type A units in ICC A117.1.~~

~~**TYPE B UNIT.** A dwelling unit or sleeping unit designed and constructed for accessibility in accordance with this code and the provisions for Type B units in ICC A117.1, consistent with the design and construction requirements of the federal Fair Housing Act.~~

NOTE:
Authority Cited: Health and Safety Code Sections 17040, 17050, 17920.9, 17921, 17921.3, 17921.6, 17921.10, 17922, 17922.6, 17922.12, 17927, 17928, 17959.6, 18300, 18552, 18554, 18620, 18630, 18640, 18670, 18690, 18691, 18865, 18871.3, 18871.4, 18873, 18873.1, 18873.2, 18873.3, 18873.4, 18873.5, 18938.3, 18944.11 and 19990; and Government Code Section 12955.1.

Reference: Health and Safety Code Sections 17000 through 17062.5, 17910 through 17995.5, 18200 through 18700, 18860 through 18874, and 19960 through 19997; and Government Code Sections 12955.1 and 12955.1.1.

---

5. HCD proposes to adopt Chapter 3, except Section 308.3, from the 2015 International Building Code into the 2016 California Building Code, with new and existing amendments as follows:

CHAPTER 3
USE AND OCCUPANCY CLASSIFICATION

SECTION 302
CLASSIFICATION

302.1 General. Structures or portions of structures shall be classified with respect to occupancy in one or more of the groups listed in this section. A room or space that is intended to be occupied at different times for different purposes shall comply with all of the requirements that are applicable to each of the purposes for which the room or space will be occupied. Structures with multiple occupancies or uses shall comply with Section 508. Where a structure is proposed for a purpose that is not specifically provided for in this code, such structure shall be classified in the group that the occupancy most nearly resembles, according to the fire safety and relative hazard involved.

1. Assembly (see Section 303): Groups A-1, A-2, A-3, A-4 and A-5
2. Business (see Section 304): Group B
3. Educational (see Section 305): Group E
4. Factory and Industrial (see Section 306): Groups F-1 and F-2
5. High Hazard (see Section 307): Groups H-1, H-2, H-3, H-4 and H-5
6. Institutional (see Section 308): Groups I-1, I-2, I-3 and I-4.
7. *(SFM) Laboratory (see Section 202): Group B, unless classified as Group L (see Section 443) or Group H (see Section 307).*
8. Mercantile (see Section 309): Group M
9. *(SFM) Organized Camps (see Section 440): Group C10.*
10. *(SFM) Research Laboratories (see Section 443): Group L*
11. Residential (see Section 310): Groups R-1, R-2, *R-2.1*, R-3, *R-3.1* and R-4
12. Storage (see Section 311): Groups S-1 and S-2
13. Utility and Miscellaneous (see Section 312): Group U

SECTION 305
EDUCATIONAL GROUP E

305.2.3 Five or fewer children in a dwelling unit. A facility such as the above within a dwelling unit and having five or fewer children receiving such day care shall be classified as a Group R-3 occupancy or shall comply with the ~~International~~ *California* Residential Code.

SECTION 310
RESIDENTIAL GROUP R

310.1 Residential Group R. Residential Group R includes, among others, the use of a building or structure, or a portion thereof, for sleeping purposes when not classified as an Institutional Group I or when not regulated by the ~~International~~ *California* Residential Code.

310.3 Residential Group R-1. Residential occupancies containing sleeping units where the occupants are primarily transient in nature, including:

Boarding houses (transient) with more than 10 occupants
Congregate living facilities (transient) with more than 10 occupants
Hotels (transient)
Motels (transient)
(HCD 1) *Efficiency dwelling units (transient)*

310.4 Residential Group R-2. Residential occupancies containing sleeping units or more than two dwelling units where the occupants are primarily permanent in nature, including:

Apartment houses
Boarding houses (nontransient) with more than 16 occupants
Congregate living facilities (nontransient) with more than 16 occupants
Convents
Dormitories
Fraternities and sororities
Hotels (nontransient)
Live/work units
Monasteries
Motels (nontransient)
Vacation timeshare properties
(HCD 1) *Efficiency dwelling units (nontransient)*

310.5 Residential Group R-3. Residential occupancies where the occupants are primarily permanent in nature and not classified as Group R-1, R-2, *R-2.1, R-3.1,* R-4 or I, including:

Buildings that do not contain more than two dwelling units
Boarding houses (nontransient) with 16 or fewer occupants
Boarding houses (transient) with 10 or fewer occupants
Care facilities that provide accommodations for ~~five~~ *six* or fewer ~~persons~~ *clients* receiving care
Congregate living facilities (nontransient) with 16 or fewer occupants
Congregate living facilities (transient) with 10 or fewer occupants
(HCD 1) *Efficiency dwelling units.*

310.5.2 Lodging houses. Owner-occupied lodging houses with five or fewer guest rooms shall be permitted to be constructed in accordance with the ~~International~~ *California* Residential Code.

NOTE:
Authority Cited: Health and Safety Code Sections 17040, 17050, 17920.9, 17921, 17921.3, 17921.6, 17921.10, 17922, 17922.6, 17922.12, 17927, 17928, 17959.6, 18300, 18552, 18554, 18620, 18630, 18640, 18670, 18690, 18691, 18865, 18871.3, 18871.4, 18873, 18873.1, 18873.2, 18873.3, 18873.4, 18873.5, 18938.3, 18944.11 and 19990; and Government Code Section 12955.1.

Reference: Health and Safety Code Sections 17000 through 17062.5, 17910 through 17995.5, 18200 through 18700, 18860 through 18874, and 19960 through 19997; and Government Code Sections 12955.1 and 12955.1.1.

6. HCD proposes to adopt Chapter 4 from the 2015 International Building Code into the 2016 California Building Code with new and existing amendments as follows:

CHAPTER 4
SPECIAL DETAILED REQUIREMENTS BASED ON USE AND OCCUPANCY

SECTION 406
MOTOR-VEHICLE-RELATED OCCUPANCIES

406.3.2 Clear height. In private garages and carports, the clear height in vehicle and pedestrian traffic areas shall be not less than 7 feet (2134 mm). ~~Vehicle and pedestrian areas accommodating van accessible parking shall comply with Section 1106.5.~~ *(HCD 1-AC) The clear height of vehicle and pedestrian areas required to be accessible shall comply with Chapter 11A.*

406.3.6 (Formerly 406.3.5) Automatic garage door openers. Automatic garage door openers, where provided, shall be listed in accordance with UL 325. *See Health and Safety Code Sections 19890 and 19891 for additional provisions for residential garage door openers.*

406.4.1 Clear height. The clear height of each floor level in vehicle and pedestrian traffic areas shall not be less than 7 feet (2134 mm). ~~Vehicle and pedestrian areas accommodating van accessible parking shall comply with Section 1106.5.~~ *(HCD 1-AC) The clear height of vehicle and pedestrian areas required to be accessible shall comply with Chapter 11A.*

406.6.2 Ventilation. A mechanical ventilation system shall be provided in accordance with the ~~International~~ *California* Mechanical Code.

406.8.2 Ventilation. Repair garages shall be mechanically ventilated in accordance with the ~~International~~ *California* Mechanical Code. The ventilation system shall be controlled at the entrance to the garage.

406.8.4 Heating equipment. Heating equipment shall be installed in accordance with the ~~International~~ *California* Mechanical Code.

SECTION 409
MOTION PICTURE PROJECTION ROOMS

409.3 Projection room and equipment ventilation. Ventilation shall be provided in accordance with the ~~International~~ *California* Mechanical Code.

SECTION 414
HAZARDOUS MATERIALS

414.1.2 Materials. The safe design of hazardous material occupancies is material dependent. Individual material requirements are also found in Sections 307 and 415, and in the ~~International~~ *California* Mechanical Code and the ~~International~~ *California* Fire Code.

414.3 Ventilation. Rooms, areas or spaces in which explosive, corrosive, combustible, flammable or highly toxic dusts, mists, fumes, vapors or gases are or may be emitted due to the processing, use, handling or storage of materials shall be mechanically ventilated where required by this code, the ~~International~~ *California* Fire Code or the ~~International~~ *California* Mechanical Code.

Emissions generated at workstations shall be confined to the area in which they are generated as specified in the ~~International~~ *California* Fire Code and the ~~International~~ *California* Mechanical Code.

SECTION 415
GROUPS H-1, H-2, H-3, H-4 AND H-5

415.9.1 (Formerly 415.8.2) Flammable and combustible liquids. The storage, handling, processing and transporting of flammable and combustible liquids in Group H-2 and H-3 occupancies shall be in accordance with

Sections 415.9.1.1 through 415.9.1.9, the ~~International~~ *California* Mechanical Code and the ~~International~~ *California* Fire Code.

415.9.1.7 (Formerly 415.8.2.7) Room ventilation. Storage tank areas storing Class I, II or IIIA liquids shall be provided with mechanical ventilation. The mechanical ventilation system shall be in accordance with the ~~International~~ *California* Mechanical Code and the ~~International~~ *California* Fire Code.

415.9.2 (Formerly 415.8.3) Liquefied petroleum gas facilities. The construction and installation of liquefied petroleum gas facilities shall be in accordance with the requirements of this code, the ~~International~~ *California* Fire Code, the ~~International~~ *California* Mechanical Code, the ~~International Fuel Gas~~ *California* Plumbing Code and NFPA 58.

415.9.3 (Formerly 415.8.4) Dry cleaning plants. The construction and installation of dry cleaning plants shall be in accordance with the requirements of this code, the ~~International~~ *California* Mechanical Code, the ~~International~~ *California* Plumbing *Code* and NFPA 32. Dry cleaning solvents and systems shall be classified in accordance with the ~~International~~ *California* Fire Code.

415.11.11 (Formerly 415.10.11) Automatic sprinkler system protection in exhaust ducts for HPM. An approved automatic sprinkler system shall be provided in exhaust ducts conveying gases, vapors, fumes, mists or dusts generated from HPM in accordance with Sections 415.11.11.1 through 415.11.11.3 and the ~~International~~ *California* Mechanical Code.

SECTION 416
APPLICATION OF FLAMMABLE FINISHES

416.2.2 Ventilation. Mechanical ventilation and interlocks with the spraying operation shall be in accordance with the ~~International~~ *California* Mechanical Code.

416.3 Spraying spaces. Spraying spaces shall be ventilated with an exhaust system to prevent the accumulation of flammable mist or vapors in accordance with the ~~International~~ *California* Mechanical Code. Where such spaces are not separately enclosed, noncombustible spray curtains shall be provided to restrict the spread of flammable vapors.

SECTION 417
DRYING ROOMS

417.1 General. A drying room or dry kiln installed within a building shall be constructed entirely of approved noncombustible materials or assemblies of such materials regulated by the approved rules or as required in the general and specific sections of this chapter for special occupancies and where applicable to the general requirements of the ~~International~~ *California* Mechanical Code.

SECTION 419
LIVE/WORK UNITS

419.7 Accessibility. Accessibility shall be designed in accordance with ~~Chapter 11~~ *Chapter 11A* for the function served.

419.8 Ventilation. The applicable ventilation requirements of the ~~International~~ *California* Mechanical Code shall apply to each area within the live/work unit for the function within that space.

419.9 Plumbing facilities. The nonresidential area of the live/work unit shall be provided with minimum plumbing facilities as specified by ~~Chapter 29~~ *the California Plumbing Code*, based on the function of the nonresidential area. Where the nonresidential area of the live/work unit is required to be accessible ~~by Section 1103.2.13~~, the plumbing fixtures specified by ~~Chapter 29~~ *the California Plumbing Code* shall be accessible.

SECTION 420
GROUPS I-1, R-1, R-2, R-3

420.7 (HCD 1) Construction waste management. *Recycle and/or salvage for reuse a minimum of ~~50~~ 65 percent of the nonhazardous construction and demolition waste in accordance with the California Green Building Standards Code (CALGreen), Chapter 4, Division 4.4.*

420.8 Special provisions for residential hotels. (HCD1 & HCD 1-AC)

420.8.1 Locking mail receptacles. *A locking mail receptacle for each residential unit shall be provided in all residential hotels pursuant to the requirements specified in Health and Safety Code Section 17958.3.*

420.9 (HCD 1) Electric vehicle (EV) charging for new construction. *Newly constructed Group R-2 and R-3 buildings shall be provided with an infrastructure to facilitate future installation and use of electric vehicle (EV) chargers in accordance with the California Green Building Standards Code (CALGreen), Chapter 4, Division 4.1.*

SECTION 421
HYDROGEN FUEL GAS ROOMS

421.5 Exhaust ventilation. Hydrogen fuel gas rooms shall be provided with mechanical exhaust ventilation in accordance with the applicable provisions of Section 502.16.1 of the ~~International~~ *California* Mechanical Code.

NOTE:
Authority Cited: Health and Safety Code Sections 17040, 17050, 17920.9, 17921, 17921.3, 17921.6, 17921.10, 17922, 17922.6, 17922.12, 17927, 17928, 17959.6, 18300, 18552, 18554, 18620, 18630, 18640, 18670, 18690, 18691, 18865, 18871.3, 18871.4, 18873, 18873.1, 18873.2, 18873.3, 18873.4, 18873.5, 18938.3, 18944.11 and 19990; and Government Code Section 12955.1.

Reference: Health and Safety Code Sections 17000 through 17062.5, 17910 through 17995.5, 18200 through 18700, 18860 through 18874, and 19960 through 19997; and Government Code Sections 12955.1 and 12955.1.1.

---

7. HCD proposes to repeal and not bring forward Section 420.6 from the 2013 California Building Code.

CHAPTER 4
SPECIAL DETAILED REQUIREMENTS BASED ON USE AND OCCUPANCY

SECTION 420
GROUPS I-1, R-1, R-2, R-3

~~***420.6 Carbon monoxide alarms. (HCD1, HCD2 & HCD1-AC)***~~

~~***420.6.1 Carbon monoxide alarms in new construction.*** *Newly constructed Group R occupancies located in a building containing a fuel-burning appliance or a building that has an attached garage shall be equipped with single station carbon monoxide alarms. The carbon monoxide alarms shall be listed as complying with UL 2034 and shall be installed and maintained in accordance with NFPA 720 and the manufacturer's instructions. An open parking garage, as defined in the California Building Code, or an enclosed parking garage ventilated in accordance with the California Mechanical Code shall not be deemed to be an attached garage.*~~

~~***Exception:*** *Sleeping units or dwelling units that do not themselves contain a fuel-burning appliance or have an attached garage, but that are located in a building with a fuel-burning appliance or an attached garage, need not be provided with single station carbon monoxide alarms provided that:*~~

~~*1. The sleeping unit or dwelling unit is located more than one story above or below any story that contains a fuel-burning appliance or an attached garage; and*~~
~~*2. The sleeping unit or dwelling unit is not connected by duct work or ventilation shafts to any room containing a fuel-burning appliance or to an attached garage; and*~~
~~*3. The building is equipped with a common area carbon monoxide detection system that includes all enclosed common area spaces.*~~

~~***420.6.1.1 Carbon monoxide detection systems.*** *Carbon monoxide detection systems that include carbon monoxide detectors and audible notification appliances installed and maintained in accordance with this section for carbon monoxide alarms and NFPA 720 shall be permitted. The carbon monoxide detectors shall be listed as complying with UL 2075.*~~

~~**420.6.1.2 Power supply.** Carbon monoxide alarms shall receive their primary power from the building wiring where such wiring is served from a commercial source and shall be equipped with a battery back-up. Alarm wiring shall be directly connected to the permanent building wiring without a disconnecting switch other than as required for overcurrent protection.~~

~~**Exceptions:**~~

~~1. Where there is no commercial power supply, the carbon monoxide alarm may be solely battery operated.~~

~~2. Other power sources recognized for use by NFPA 720.~~

~~**420.6.1.3 Interconnection.** Where more than one carbon monoxide alarm is required to be installed within the dwelling unit or within a sleeping unit, the alarm shall be interconnected in a manner that activation of one alarm shall activate all of the alarms in the individual unit.~~

~~**420.6.1.4 Alarm requirements.** No person shall install, market, distribute, offer for sale, or sell any carbon monoxide device in the State of California unless the device and instructions have been approved and listed by the State Fire Marshal.~~

~~Carbon monoxide alarms required by Section 420.6.1 shall be installed and maintained in the following locations:~~

~~1. Outside of each separate dwelling unit sleeping area in the immediate vicinity of the bedroom(s).~~

~~2. On every level of a dwelling unit including basements.~~

~~3. Group R-1 Occupancies only.~~

~~a. On the ceiling of every sleeping unit or other locations within the sleeping unit in compliance with the manufacturer's installation instructions.~~

~~**420.6.1.5 Multiple-purpose alarms.** Carbon monoxide alarms combined with smoke alarms shall comply with Section 420.6, all applicable standards, and requirements for listing and approval by the Office of the State Fire Marshal, for smoke alarms.~~

~~**420.6.1.6 Visible alarms.** In buildings containing covered multifamily dwellings as defined in Chapter 2, with fuel-burning appliances and/or attached garages as described in Section 420.6.1, all required carbon monoxide alarms shall be equipped with the capability to support visible alarm notification in accordance with NFPA 720.~~

~~**420.6.2 Carbon monoxide alarms in existing dwellings or sleeping units.** Existing Group R occupancies located in a building with a fossil fuel-burning heater or appliance, fireplace or an attached garage shall have single station carbon monoxide alarms installed in accordance with this section. The carbon monoxide alarms shall be listed as complying with UL 2034 and be installed and maintained in accordance with NFPA 720 and the manufacturer's instructions.~~
~~An open parking garage, as defined in the California Building Code, or an enclosed parking garage ventilated in accordance with the California Mechanical Code shall not be deemed to be an attached garage.~~

~~**Exception:** Sleeping units or dwelling units that do not themselves contain a fossil fuel-burning heater or appliance, fireplace or an attached garage, but that are located in a building with a fossil fuel-burning appliance or an attached garage, need not be provided with single station carbon monoxide alarms provided that:~~
~~1. The sleeping unit or dwelling unit is located more than one story above or below any story that contains a fuel-burning appliance or an attached garage; and~~
~~2. The sleeping unit or dwelling unit is not connected by duct work or ventilation shafts to any room containing a fuel-burning appliance or to an attached garage; and~~
~~3. The building is equipped with a common area carbon monoxide detection system, carbon monoxide detector or combination detector in the same space as permanently installed fuel-burning appliance(s).~~

~~**420.6.2.1 Carbon monoxide detection systems.** Carbon monoxide detection systems that include carbon monoxide detectors and audible notification appliances, installed and maintained in accordance with this section for carbon monoxide alarms and NFPA 720 shall be permitted. The carbon monoxide detectors shall be listed as complying with UL 2075.~~

~~**420.6.2.2 Existing dwellings or sleeping units requiring a permit.** When a permit is required for alterations, repairs or additions with a total cost or calculated valuation exceeding one thousand dollars ($1,000), existing dwellings or sleeping units with a fossil fuel-burning heater or appliance, fireplace or an attached garage shall have a carbon monoxide alarm installed in accordance with Section 420.4.2 420.6.2. Carbon monoxide alarms shall only be required in the specific dwelling unit or sleeping unit for which the permit was obtained.~~

~~**420.6.2.3 Existing dwellings or sleeping units not requiring a permit (no construction taking place).** Pursuant to Health and Safety Code Section 17926, a carbon monoxide alarm(s) shall be installed in every existing dwelling unit or sleeping unit with a fossil fuel-burning heater or appliance, fireplace or an attached garage as follows:~~

~~**420.6.2.3.1 Carbon monoxide alarms on or after July 1, 2011.** Carbon monoxide alarms shall be installed in accordance with Section 420.6.2 in existing detached single-family dwellings or sleeping units intended for human occupancy that have a fossil fuel-burning heater or appliance, fireplace or an attached garage. Carbon monoxide alarms in existing buildings are permitted to be solely battery operated or plug-in type with battery back-up in areas where no construction is taking place.~~

~~**420.6.2.3.2 Carbon monoxide alarms on or after January 1, 2013.** Carbon monoxide alarms shall be installed in accordance with Section 420.4.2 420.6.2 in all other existing dwelling units intended for human occupancy as defined in Health and Safety Code Section 13262(b) that have a fossil fuel-burning heater or appliance, fireplace or an attached garage. Carbon monoxide alarms in existing buildings are permitted to be solely battery operated or plug-in type with battery back-up in areas where no construction is taking place.~~

~~**Note:** See Section 420.6.2.3.3, which extends the required carbon monoxide alarms installation date for existing hotel and motel dwelling units intended for human occupancy.~~

~~**420.6.2.3.3 Carbon monoxide alarms on or after January 1, 2016.** Carbon monoxide alarms shall be installed in accordance with Section 420.6.2 in existing hotel and motel dwelling units intended for human occupancy as defined in Health and Safety Code Section 13262(b) that have a fossil fuel-burning heater or appliance, fireplace or an attached garage. Carbon monoxide alarms in existing buildings are permitted to be solely battery operated or plug-in type with battery back-up in areas where no construction is taking place.~~

~~**420.6.2.4 Power supply.** Carbon monoxide alarms shall receive their primary power from the building wiring where such wiring is served from a commercial source and shall be equipped with battery back-up. Alarm wiring shall be directly connected to the permanent building wiring without a disconnecting switch other than as required for overcurrent protection.~~

~~**Exceptions:**~~

~~1. In existing dwelling units where there is no commercial power supply, the carbon monoxide alarm may be solely battery operated.~~

~~2. In existing dwelling units, a carbon monoxide alarm is permitted to be solely battery operated or plug-in with a battery backup where repairs or alterations do not result in the removal of wall and ceiling finishes.~~

~~3. In existing dwelling units, a carbon monoxide alarm is permitted to be solely battery operated or plug-in with battery backup where repairs or alterations are limited to the exterior surfaces of dwellings, such as the replacement of roofing or siding, or the addition or replacement of windows or doors, or the addition of a porch or deck.~~

~~4. In existing dwelling units, a carbon monoxide alarm is permitted to be solely battery operated or plug-in with battery backup when work is limited to the installation, alteration or repair of plumbing or mechanical systems or the installation, alteration or repair of electrical systems, which do not result in the removal of interior wall or ceiling finishes exposing the structure.~~

~~5. Other power sources recognized for use by NFPA 720.~~

~~**420.6.2.5 Interconnection.** *Where more than one carbon monoxide alarm is required to be installed within the dwelling unit or within a sleeping unit, the alarm shall be interconnected in a manner that activation of one alarm shall activate all of the alarms in the individual unit.*~~

~~***Exceptions:***~~

~~*1. In existing dwelling units or within sleeping units, interconnection is not required where repairs do not result in the removal of wall and ceiling finishes and no previous method for interconnection existed.*~~

~~*2. In existing dwelling units, carbon monoxide alarms are not required to be interconnected where no construction is taking place.*~~

~~*3. In existing dwelling units, carbon monoxide alarms are not required to be interconnected where repairs or alterations are limited to the exterior surfaces of dwellings, such as the replacement of roofing or siding, or the addition or replacement of windows or doors, or the addition of a porch or deck.*~~

~~*4. In existing dwelling units, carbon monoxide alarms are not required to be interconnected when work is limited to the installation, alteration or repair of plumbing or mechanical systems or the installation, alteration or repair of electrical systems, which do not result in the removal of interior wall or ceiling finishes exposing the structure.*~~

~~**420.6.2.6 Alarm requirements.** *No person shall install, market, distribute, offer for sale, or sell any carbon monoxide device in the State of California unless the device and instructions have been approved and listed by the State Fire Marshal.*~~

~~*Carbon monoxide alarms required by Section 420.4.2-420.6.2 shall be installed and maintained in the following locations:*~~

~~*1. Outside of each separate dwelling unit sleeping area in the immediate vicinity of the bedroom(s).*~~

~~*2. On every level of a dwelling unit including basements.*~~

~~*3. Group R-1 Occupancies only.*~~

~~*a. On the ceiling of every sleeping unit or other locations within the sleeping unit in compliance with the manufacturer's installation instructions.*~~

NOTE:
Authority Cited: Health and Safety Code Sections 17040, 17050, 17920.9, 17921, 17921.3, 17921.6, 17921.10, 17922, 17922.6, 17922.12, 17927, 17928, 17959.6, 18300, 18552, 18554, 18620, 18630, 18640, 18670, 18690, 18691, 18865, 18871.3, 18871.4, 18873, 18873.1, 18873.2, 18873.3, 18873.4, 18873.5, 18938.3, 18944.11 and 19990; and Government Code Section 12955.1.

Reference: Health and Safety Code Sections 17000 through 17062.5, 17910 through 17995.5, 18200 through 18700, 18860 through 18874, and 19960 through 19997; and Government Code Sections 12955.1 and 12955.1.1.

---

8. HCD proposes to adopt Chapter 5 from the 2015 International Building Code into the 2016 California Building Code with existing amendment as follows:

CHAPTER 5
GENERAL BUILDING HEIGHTS AND AREAS

SECTION 503
GENERAL BUILDING HEIGHT AND AREA LIMITATIONS

503.1 General. Unless otherwise specifically modified in Chapter 4 and this chapter, building height, number of stories and building area shall not exceed the limits specified in Sections 504 and 506 based on the type of construction as determined by Section 602 and the occupancies as determined by Section 302 except as modified

hereafter. Building height, number of stories and building area provisions shall be applied independently. Each portion of a building separated by one or more fire walls complying with Section 706 shall be considered to be a separate building.

***Exception:** (HCD 1) Limited-density owner-built rural dwellings may be of any type of construction which will provide for a sound structural condition. Structural hazards which result in an unsound condition and which may constitute a substandard building are delineated by Section 17920.3 of the Health and Safety Code.*

NOTE:
Authority Cited: Health and Safety Code Sections 17040, 17050, 17920.9, 17921, 17921.3, 17921.6, 17921.10, 17922, 17922.6, 17922.12, 17927, 17928, 17959.6, 18300, 18552, 18554, 18620, 18630, 18640, 18670, 18690, 18691, 18865, 18871.3, 18871.4, 18873, 18873.1, 18873.2, 18873.3, 18873.4, 18873.5, 18938.3, 18944.11, and 19990; and Government Code Section 12955.1.

Reference: Health and Safety Code Sections 17000 through 17062.5, 17910 through 17995.5, 18200 through 18700, 18860 through 18874, and 19960 through 19997; and Government Code Sections 12955.1 and 12955.1.1.

---

9. HCD proposes to adopt Chapter 6 from the 2015 International Building Code into the 2016 California Building Code with existing and modified existing amendments as follows:

CHAPTER 6
TYPES OF CONSTRUCTION

SECTION 603
COMBUSTIBLE MATERIAL IN TYPE I AND II CONSTRUCTION

603.1 Allowable materials. Combustible materials shall be permitted in buildings of Type I or Type II construction in the following applications and in accordance with Sections 603.1.1 through 603.1.3:

1. Fire-retardant-treated wood shall be permitted in:

   .... (No change to text)

25. Materials exposed within plenums complying with Section 602 of the ~~*International*~~ *California Mechanical Code.*

   .... (No change to text)

603.1.1 Ducts. The use of nonmetallic ducts shall be permitted where installed in accordance with the limitations of the ~~International~~ *California* Mechanical Code.

603.1.2 Piping. The use of combustible piping materials shall be permitted where installed in accordance with the limitations of the ~~International~~ *California* Mechanical Code and the ~~International~~ *California* Plumbing Code.

603.1.3 Electrical. The use of electrical wiring methods with combustible insulation, tubing, raceways and related components shall be permitted when installed in accordance with the limitations of this code *and the California Electrical Code.*

NOTE:
Authority Cited: Health and Safety Code Sections 17040, 17050, 17920.9, 17921, 17921.3, 17921.6, 17921.10, 17922, 17922.6, 17922.12, 17927, 17928, 17959.6, 18300, 18552, 18554, 18620, 18630, 18640, 18670, 18690, 18691, 18865, 18871.3, 18871.4, 18873, 18873.1, 18873.2, 18873.3, 18873.4, 18873.5, 18938.3, 18944.11, and 19990; and Government Code Section 12955.1.

Reference: Health and Safety Code Sections 17000 through 17062.5, 17910 through 17995.5, 18200 through 18700, 18860 through 18874, and 19960 through 19997; and Government Code Sections 12955.1 and 12955.1.1.

10. HCD proposes to adopt Chapter 7 from the 2015 International Building Code into the 2016 California Building Code with new and existing amendments as follows:

CHAPTER 7
FIRE AND SMOKE PROTECTION FEATURES

SECTION 703
FIRE RESISTANCE RATINGS AND FIRE TESTS

703.4 Automatic sprinklers. Under the prescriptive fire resistance requirements of this code, the fire-resistance rating of a building element, component or assembly shall be established without the use of automatic sprinklers or any other fire suppression system being incorporated as part of the assembly tested in accordance with the fire exposure, procedures and acceptance criteria specified in ASTM E 119 or UL 263. However, this section shall not prohibit or limit the duties and powers of the building official allowed by Sections 104.10, ~~and~~ 104.11 *and 1.8.7, as applicable*.

SECTION 712
VERTICAL OPENINGS

712.1.6 (Formerly 712.1.5) Ducts and air transfer openings. Penetrations by ducts and air transfer openings shall be protected in accordance with Section 717. Grease ducts shall be protected in accordance with the ~~International~~ *California* Mechanical Code.

SECTION 717
DUCTS AND AIR TRANSFER OPENINGS

717.2.2 Hazardous exhaust ducts. Fire dampers for hazardous exhaust duct systems shall comply with the ~~International~~ *California* Mechanical Code.

717.5.3 Shaft enclosures. Shaft enclosures that are permitted to be penetrated by ducts and air transfer openings shall be protected with approved fire and smoke dampers installed in accordance with their listing.

Exceptions:

1. Fire dampers are not required at penetrations of shafts where:
   .... (No change to text)
5. Fire dampers and combination fire/smoke dampers are not required in kitchen and clothes dryer exhaust systems when installed in accordance with the ~~International~~ *California* Mechanical Code.

717.5.4 Fire partitions. Ducts and air transfer openings that penetrate fire partitions shall be protected with listed fire dampers installed in accordance with their listing.

Exceptions: In occupancies other than Group H, fire dampers are not required where any of the following apply:

1. Corridor walls in buildings equipped throughout with an automatic sprinkler system in accordance with Section 903.3.1.1 or 903.3.1.2 and the duct is protected as a through penetration in accordance with Section 714.

   .... (No change to text)

3. The duct system is constructed of approved materials in accordance with the ~~International~~ *California* Mechanical Code and the duct penetrating the wall complies with all of the following requirements:

.... (No change to text)

717.6.1 Through penetrations. In occupancies other than Groups I-2 and I-3, a duct constructed of approved materials in accordance with the ~~International~~ *California* Mechanical Code that penetrates a fire-resistance-rated floor/ceiling assembly that connects not more than two stories is permitted without shaft enclosure protection, provided a listed fire damper is installed at the floor line or the duct is protected in accordance with Section 714.4. For air transfer openings, see Exception 7 to Section 712.1.9.

717.6.2 Membrane penetrations. Ducts and air transfer openings constructed of approved materials in accordance with the ~~International~~ *California* Mechanical Code that penetrate the ceiling membrane of a fire-resistance-rated floor/ceiling or roof/ceiling assembly shall be protected with one of the following:

... (No change to text)

717.6.3 Nonfire-resistance-rated floor assemblies. Duct systems constructed of approved materials in accordance with the ~~International~~ *California* Mechanical Code that penetrate nonfire-resistance-rated floor assemblies shall be protected by any of the following methods:

... (No change to text)

SECTION 718
CONCEALED SPACES

718.5 Combustible materials in concealed spaces in Type I or II construction. Combustible materials shall not be permitted in concealed spaces of buildings of Type I or II construction.

Exceptions:

1. Combustible materials in accordance with Section 603.
2. Combustible materials exposed within plenums complying with Section 602 of the ~~International~~ *California* Mechanical Code.

.... (No change to text)

5. Combustible piping within concealed ceiling spaces installed in accordance with the ~~International~~ *California* Mechanical Code and the ~~International~~ *California* Plumbing Code.

SECTION 720
THERMAL-AND SOUND-INSULATING MATERIALS

720.1 General. Insulating materials, including facings such as vapor retarders and vapor-permeable membranes, similar coverings and all layers of single and multilayer reflective foil insulations, shall comply with the requirements of this section. Where a flame spread index or a smoke-developed index is specified in this section, such index shall be determined in accordance with ASTM E 84 or UL 723. Any material that is subject to an increase in flame spread index or smoke-developed index beyond the limits herein established through the effects of age, moisture or other atmospheric conditions shall not be permitted.

Exceptions:

1. Fiberboard insulation shall comply with Chapter 23.

.... (No change to text)

3. Duct and pipe insulation and duct and pipe coverings and linings in plenums shall comply with the ~~International~~ *California* Mechanical Code.

.... (No change to text)

720.7 Insulation and covering on pipe and tubing. Insulation and covering on pipe and tubing shall have a flame spread index of not more than 25 and a smoke-developed index of not more than 450.

Exception: Insulation and covering on pipe and tubing installed in plenums shall comply with the ~~International~~ *California* Mechanical Code.

SECTION 721
PRESCRIPTIVE FIRE RESISTANCE

721.2 Cellular concrete. (HCD 1 & HCD 2)

721.2.1 Use and application. (HCD 1 & HCD 2) *Controlled-density cellular concrete, when used or applied, shall be in accordance with the use of materials in Bulletin No. 65 of the Federal Housing Administration, United States Department of Housing and Urban Development.*

Exceptions:

1. *Regardless of the provisions of Subsections 3.2, 3.3, 3.4 and 3.6 in Section 3, Bulletin No. 65 provisions relating to proportioning, mixing and testing, in the following shall apply to this chapter.*

   1.1. *Field-control weighings for control of the wet-unit weight shall be made. The design wet-unit weight for field control of the concrete shall be based on previously established data for the relation between the wet-unit weight and the air-dry-unit weight at 28 days for the mix being placed. Field-control weighings for determining the wet-unit weight shall be made at the mixer discharge and at the point of deposit. There should be one pair of weighings per batch for batch-type mixers unless equipment is provided with scales allowing the operator to adequately weigh materials.*

   For continuous weight-instrumented batch mixers, there should be one pair of weighings per 10 cubic yards (7.65 m³). The gain in unit weight between the mixer discharge and point of deposit shall not exceed 5 percent. The wet-unit weight at the point of deposit of the concrete shall not exceed plus 5 percent of the design wet-unit weight. A variation exceeding plus 5 percent of the design wet-unit weight shall require a modification of the mix proportions, a change of materials or a change in the mixing procedure.

   1.2. *When tests are required by the enforcing agency, they shall be performed in the following manner:*
   Two test cylinders, for compressive strength tests, shall be made for each 8,000 square feet (743 m2) of surface area placed. A minimum of two test cylinders shall be made each day. Each strength test result shall be the average of two cylinders from the same sample tested at 28 days or at a specified earlier date.

   1.3. *The minimum air-dry density shall be 90 pounds per cubic foot (1,440 kg/m³). The minimum design compressive strength shall be 1,000 psi (6,890 kPa) when the curing procedure specified herein is applied. The minimum design compressive strength shall be 1,250 psi (8,619 kPa) if the slab is placed in a covered area of a building and a specified curing medium is not applied. The specified design compressive strength shall be increased 20 percent when the specified strength is greater than 1,000 psi (6,890 kPa) and the slab is placed in a covered area of a building and a specified curing medium is not applied.*

   1.4. *The cellular concrete shall be sampled at the point of deposit in accordance with the applicable procedures of ASTM C 172, Sampling Fresh Concrete. Cylinder molds shall be either 3 inches by 6 inches (76 mm by 152 mm) or 6 inches by 12 inches (152 mmby 305 mm). Lightly tap the sides of the mold with a rubber hammer while filling the mold instead of rodding the mix. Moist cure the specimens for seven days at 73.4°F (40.8°C) plus or minus 3°F (1.7°C). At the age of seven days, remove the specimens from the moist condition and store in a temperature of 73.4°F (40.8°C) plus or minus 3°F (1.7°C) and a relative humidity of 50 plus or minus 10 percent for 21 days; remove and air dry until the time of test at 28 days. The compressive strength test shall be in accordance with ASTM C 39, Compressive Strength of Cylindrical Concrete Specimens. Determine the air-dry-unit weight at 28 days.*

2. *Regardless of the provisions of Subsections 4.1 and 4.2 in Section 4 of Bulletin No. 65, relating to placing, finishing and curing, the following shall apply to these regulations.*

   2.1. *The concrete shall be placed, finished and cured to produce a level, smooth surface. The concrete shall be placed in a single layer to a minimum thickness of 11/2 inches (38 mm). The deviation from a plan shall not exceed 1/4 inch (6 mm) in any 10 feet (3048 mm). The final finish of the concrete shall be suitable for the application of the specified wear- resistant covering. Cracks wider than 1/8 inch (3 mm) shall be repaired.*

   2.2. *Install a water-resistant membrane between wood or plywood subfloors and the cellular concrete to prevent leakage of the concrete and wetting of the subfloor. The membrane shall consist of waterproof paper or plastic sheets conforming to ASTM C 171, Sheet Materials for Curing Concrete, or Type 15 roofing felt conforming to ASTM D 226, D 250 or D 227, or Federal Specification UUB790, Building Paper Vegetable Fiber: (Kraft, Waterproofed, Water Repellent and Fire-resistant) Type 1, Grade B. The sheets shall be securely fastened to the subfloor.*

3. Regardless of the provisions of Subsections 6.1 and 6.2 in Section 6, of Bulletin No. 65, relating to applicator qualifications and warranty, these subsections are omitted from this chapter.

NOTE
Authority Cited: Health and Safety Code Sections 17040, 17050, 17920.9, 17921, 17921.3, 17921.6, 17921.10, 17922, 17922.6, 17922.12, 17927, 17928, 17959.6, 18300, 18552, 18554, 18620, 18630, 18640, 18670, 18690, 18691, 18865, 18871.3, 18871.4, 18873, 18873.1, 18873.2, 18873.3, 18873.4, 18873.5, 18938.3, 18944.11 and 19990; and Government Code Section 12955.1.

Reference: Health and Safety Code Sections 17000 through 17062.5, 17910 through 17995.5, 18200 through 18700, 18860 through 18874, and 19960 through 19997; and Government Code Sections 12955.1 and 12955.1.1.

---

11. HCD proposes to adopt Chapter 8 from the 2015 International Building Code into the 2016 California Building Code without amendments:

CHAPTER 8
INTERIOR FINISHES

NOTE:
Authority Cited: Health and Safety Code Sections 17040, 17050, 17920.9, 17921, 17921.3, 17921.6, 17921.10, 17922, 17922.6, 17922.12, 17927, 17928, 17959.6, 18300, 18552, 18554, 18620, 18630, 18640, 18670, 18690, 18691, 18865, 18871.3, 18871.4, 18873, 18873.1, 18873.2, 18873.3, 18873.4, 18873.5, 18938.3, 18944.11 and 19990; and Government Code Section 12955.1.

Reference: Health and Safety Code Sections 17000 through 17062.5, 17910 through 17995.5, 18200 through 18700, 18860 through 18874, and 19960 through 19997; and Government Code Sections 12955.1 and 12955.1.1.

---

12. HCD proposes to adopt Chapter 9, except Section 908.7, from the 2015 International Building Code into the 2016 California Building Code with new and existing amendments as follows:

CHAPTER 9
FIRE PROTECTION SYSTEMS

SECTION 903
AUTOMATIC SPRINKLER SYSTEMS

903.2.11.4 Ducts conveying hazardous exhausts. Where required by the ~~International~~ *California* Mechanical Code, automatic sprinklers shall be provided in ducts conveying hazardous exhaust, or flammable or combustible materials.

Exception: Ducts in which the largest cross-sectional diameter of the duct is less than 10 inches (254 mm).

903.3.5 Water supplies. Water supplies for automatic sprinkler systems shall comply with this section and the standards referenced in Section 903.3.1. The potable water supply shall be protected against backflow in accordance with the requirements of this section and the ~~International~~ *California* Plumbing Code. For connections to public waterworks systems, the water supply test used for design of fire protection systems shall be adjusted to account for seasonal and daily pressure fluctuations based on information from the water supply authority and as approved by the fire code official.

SECTION 904
ALTERNATIVE AUTOMATIC FIRE-EXTINGUISHING SYSTEMS

904.2.2 (Formerly 904.2.1) Commercial hood and duct systems. Each required commercial kitchen exhaust hood and duct system required by Section 609 of the ~~International~~ *California* Fire Code or ~~Chapter 5 of~~ the

~~*International*~~ *California* Mechanical Code to have a Type I hood shall be protected with an approved automatic fire-extinguishing system installed in accordance with this code.

904.3 Installation. Automatic fire-extinguishing systems shall be installed in accordance with this section.

904.3.1 Electrical wiring. Electrical wiring shall be in accordance with ~~NFPA 70~~ *the California Electrical Code.*

904.11.1.3 Water supply protection. Connections to a potable water supply shall be protected against backflow in accordance with the ~~International~~ *California* Plumbing Code.

SECTION 907
FIRE ALARM AND DETECTION SYSTEMS

907.3.1 Duct smoke detectors. Smoke detectors installed in ducts shall be listed for the air velocity, temperature and humidity present in the duct. Duct smoke detectors shall be connected to the building's fire alarm control unit when a fire alarm system is required by Section 907.2. Activation of a duct smoke detector shall initiate a visible and audible supervisory signal at a constantly attended location and shall perform the intended fire safety function in accordance with this code and the ~~International~~ *California* Mechanical Code. In facilities that are required to be monitored by a supervising station, duct smoke detectors shall report only as a supervisory signal and not as a fire alarm. They shall not be used as a substitute for required open area detection.

907.5.2.3.3 (Formerly 907.5.2.3.4) Group R-2. In Group R-2 occupancies required by Section 907 to have a fire alarm system, all dwelling units and sleeping units shall be provided with the capability to support visible alarm notification appliances in accordance with ~~Chapter 10 of ICC A117.1~~ *NFPA 72*. Such capability shall be permitted to include the potential for future interconnection of the building fire alarm system with the unit smoke alarms, replacement of audible appliances with combination audible/visible appliances, or future extension of the existing wiring from the unit smoke alarm locations to required locations for visible appliances.

907.6.1 Wiring. Wiring shall comply with the requirements of ~~NFPA 70~~ *California Electrical Code* and NFPA 72. Wireless protection systems utilizing radio-frequency transmitting devices shall comply with the special requirements for supervision of low-power wireless systems in NFPA 72.

SECTION 908
EMERGENCY ALARM SYSTEMS

908.6 Refrigerant detector. Machinery rooms shall contain a refrigerant detector with an audible and visual alarm. The detector, or a sampling tube that draws air to the detector, shall be located in an area where refrigerant from a leak will concentrate. The alarm shall be actuated at a value not greater than the corresponding TLV-TWA values for the refrigerant classification indicated in the ~~International~~ *California* Mechanical Code. Detectors and alarms shall be placed in approved locations.

SECTION 909
SMOKE CONTROL SYSTEMS

909.1 Scope and purpose. This section applies to mechanical or passive smoke control systems when they are required by other provisions of this code. The purpose of this section is to establish minimum requirements for the design, installation and acceptance testing of smoke control systems that are intended to provide a tenable environment for the evacuation or relocation of occupants. These provisions are not intended for the preservation of contents, the timely restoration of operations or for assistance in fire suppression or overhaul activities. Smoke control systems regulated by this section serve a different purpose than the smoke- and heat-venting provisions found in Section 910. Mechanical smoke control systems shall not be considered exhaust systems under Chapter 5 of the ~~International~~ *California* Mechanical Code.

909.10.2 Ducts. Duct materials and joints shall be capable of withstanding the probable temperatures and pressures to which they are exposed as determined in accordance with Section 909.10.1. Ducts shall be constructed and supported in accordance with the ~~International~~ *California* Mechanical Code. Ducts shall be leak tested to 1.5 times the maximum design pressure in accordance with nationally accepted practices. Measured leakage shall not exceed 5 percent of design flow. Results of such testing shall be a part of the documentation

procedure. Ducts shall be supported directly from fire-resistance-rated structural elements of the building by substantial, noncombustible supports.

Exception: Flexible connections, for the purpose of vibration isolation, complying with the ~~International~~ *California* Mechanical Code, that are constructed of approved fire-resistance-rated materials.

909.12.2 (Formerly 909.12.1) Wiring. In addition to meeting requirements of ~~NFPA 70~~ *California Electrical Code*, all wiring, regardless of voltage, shall be fully enclosed within continuous raceways.

909.13.1 Materials. Control-air tubing shall be hard drawn copper, Type L, ACR in accordance with ASTM B 42, ASTM B 43, ASTM B 68, ASTM B 88, ASTM B 251 and ASTM B 280. Fittings shall be wrought copper or brass, solder type in accordance with ASME B 16.18 or ASME B16.22. Changes in direction shall be made with appropriate tool bends. Brass compression-type fittings shall be used at final connection to devices; other joints shall be brazed using a BCuP-5 brazing alloy with solidus above 1,100°F (593°C) and liquids below 1,500°F (816°C). Brazing flux shall be used on copper-to-brass joints only.

Exception: Nonmetallic tubing used within control panels and at the final connection to devices provided all of the following conditions are met:

1. Tubing shall comply with the requirements of ~~Section 602.2.1.3~~ *Chapter 6* of the ~~International~~ *California* Mechanical Code.

909.16.3 Control action and priorities. The firefighter's control panel actions shall be as follows:

1. ON-OFF and OPEN-CLOSE control actions shall have the highest priority of any control point within the building. Once issued from the fire-fighter's control panel, no automatic or manual control from any other control point within the building shall contradict the control action. Where automatic means are provided to interrupt normal, nonemergency equipment operation or produce a specific result to safeguard the building or equipment (i.e., duct freezestats, duct smoke detectors, high-temperature cutouts, temperature-actuated linkage and similar devices), such means shall be capable of being overridden by the fire-fighter's control panel. The last control panel switch position shall prevail. In no case shall control actions require the smoke control system to assume more than one configuration at any one time.

   Exception: Power disconnects required by ~~NFPA 70~~ *California Electrical Code*.

SECTION 910
SMOKE AND HEAT REMOVAL

910.4.6 Control wiring. Wiring for operation and control of mechanical smoke removal systems shall be connected ahead of the main disconnect in accordance with Section 701.12E of ~~NFPA 70~~ *the California Electrical Code* and be protected against interior fire exposure to temperatures in excess of 1,000°F (538°C) for a period of not less than 15 minutes.

910.4.7 Controls. Where building air-handling and mechanical smoke removal systems are combined or where independent building air-handling systems are provided, fans shall automatically shut down in accordance with the ~~International~~ *California* Mechanical Code. The manual controls provided for the smoke removal system shall have the capability to override the automatic shutdown of fans that are part of the smoke removal system.

SECTION 912
FIRE DEPARTMENT CONNECTIONS

912.6 (Formerly 912.5) Backflow protection. The potable water supply to automatic sprinkler and standpipe systems shall be protected against backflow as required by the ~~International~~ *California* Plumbing Code.

SECTION 915
CARBON MONOXIDE DETECTION

915.1 General. Carbon monoxide detection shall be installed in new *and existing* buildings in accordance with Sections 915.1.1 through ~~915.6~~ *915.7*. ~~Carbon monoxide detection shall be installed in existing buildings in accordance with Chapter 11 of the International Fire Code.~~

Pursuant to Health and Safety Code Section 17926, carbon monoxide detection shall be installed in all existing Group R buildings as required in Section 915.

915.1.1 Where required. Carbon monoxide detection shall be provided in Group I-1, I-2, I-4 and R occupancies and in classrooms in Group E occupancies in the locations specified in Section 915.2 where any of the conditions in Sections 915.1.2 through 915.1.6 exist.

915.1.2 Fuel-burning appliances and fuel-burning fireplaces. Carbon monoxide detection shall be provided in dwelling units, sleeping units and classrooms that contain a fuel-burning appliance or a fuel-burning fireplace.

915.1.3 Forced-air furnaces. Carbon monoxide detection shall be provided in dwelling units, sleeping units and classrooms served by a fuel-burning, forced-air furnace.

Exception: Carbon monoxide detection shall not be required in dwelling units, sleeping units and classrooms if carbon monoxide detection is provided in the first room or area served by each main duct leaving the furnace, and the carbon monoxide alarm signals are automatically transmitted to an approved location.

915.1.4 Fuel-burning appliances outside of dwelling units, sleeping units and classrooms. Carbon monoxide detection shall be provided in dwelling units, sleeping units and classrooms located in buildings that contain fuel burning appliances or fuel-burning fireplaces.

Exceptions:

1. Carbon monoxide detection shall not be required in dwelling units, sleeping units and classrooms where there are no communicating openings between the fuel-burning appliance or fuel-burning fireplace and the dwelling unit, sleeping unit or classroom.
2. Carbon monoxide detection shall not be required in dwelling units, sleeping units and classrooms where carbon monoxide detection is provided in one of the following locations:
   - 2.1. In an approved location between the fuel burning appliance or fuel-burning fireplace and the dwelling unit, sleeping unit or classroom.
   - 2.2. On the ceiling of the room containing the fuel-burning appliance or fuel-burning fireplace.

915.1.5 Private garages. Carbon monoxide detection shall be provided in dwelling units, sleeping units and classrooms in buildings with attached private garages.

Exceptions:

1. Carbon monoxide detection shall not be required where there are no communicating openings between the private garage and the dwelling unit, sleeping unit or classroom.
2. Carbon monoxide detection shall not be required in dwelling units, sleeping units and classrooms located more than one story above or below a private garage.
3. Carbon monoxide detection shall not be required where the private garage connects to the building through an open-ended corridor.
4. Where carbon monoxide detection is provided in an approved location between openings to a private garage and dwelling units, sleeping units or classrooms, carbon monoxide detection shall not be required in the dwelling units, sleeping units or classrooms.

915.1.6 Exempt garages. For determining compliance with Section 915.1.5, an open parking garage complying with Section 406.5 or an enclosed parking garage complying with Section 406.6 shall not be considered a private garage.

915.2 Locations. Where required by Section 915.1.1, carbon monoxide detection shall be installed *in accordance with the manufacturer's published instructions* in the locations specified in Sections 915.2.1 through 915.2.3.

915.2.1 Dwelling units. Carbon monoxide detection shall be installed in dwelling units *in the following locations:*

1. ~~outside~~ *Outside* of each separate sleeping area in the immediate vicinity of the bedrooms.

2. On every occupiable level of a dwelling unit, including basements.

3. Where a fuel-burning appliance is located within a bedroom or its attached bathroom, carbon monoxide detection shall be installed within the bedroom.

915.2.2 Sleeping units. Carbon monoxide detection shall be installed in sleeping units.

Exception: Carbon monoxide detection shall be allowed to be installed outside of each separate sleeping area in the immediate vicinity of the sleeping unit where the sleeping unit or its attached bathroom does not contain a fuel-burning appliance and is not served by a forced air furnace.

915.2.3 Group E occupancies. Carbon monoxide detection shall be installed in classrooms in Group E occupancies. Carbon monoxide alarm signals shall be automatically transmitted to an on-site location that is staffed by school personnel.

Exception: Carbon monoxide alarm signals shall not be required to be automatically transmitted to an on-site location that is staffed by school personnel in Group E occupancies with an occupant load of 30 or less.

915.3 Detection equipment. Carbon monoxide detection required by Sections 915.1 through 915.2.3 shall be provided by carbon monoxide alarms complying with Section 915.4 or carbon monoxide detection systems complying with Section 915.5.

915.4 Carbon monoxide alarms. Carbon monoxide alarms shall comply with Sections 915.4.1 through 915.4.~~3~~ 4.

915.4.1 Power source. Carbon monoxide alarms shall receive their primary power from the building wiring where such wiring is served from a commercial source, and when primary power is interrupted, shall receive power from a battery. Wiring shall be permanent and without a disconnecting switch other than that required for overcurrent protection.

Exceptions:

1. Where installed in buildings without commercial power, battery-powered carbon monoxide alarms shall be an acceptable alternative.

2. *Carbon monoxide alarms in Group R occupancies shall be permitted to receive their primary power from other power sources recognized for use by NFPA 720.*

3. *Carbon monoxide alarms in Group R occupancies shall be permitted to be battery-powered or plug-in with a battery backup in existing buildings built prior to January 1, 2011, under any of the following conditions:*

   3.1. No construction is taking place.

   3.2. Repairs or alterations do not result in the removal of interior wall and ceiling finishes exposing the structure in areas/spaces where carbon monoxide alarms are required.

   3.3. Repairs or alterations are limited to the exterior surfaces of dwellings, such as the replacement of roofing or siding, or the addition or replacement of windows or doors, or the addition of a porch or deck.

   3.4. Work is limited to the installation, alteration or repair of plumbing, mechanical or electrical systems, which do not result in the removal of interior wall or ceiling finishes exposing the structure in areas/spaces where carbon monoxide alarms are required.

915.4.2 Listings. Carbon monoxide alarms shall be listed in accordance with UL 2034.

No person shall install, market, distribute, offer for sale, or sell any carbon monoxide device in the State of California unless the device and instructions have been approved and listed by the Office of the State Fire Marshal.

915.4.3 Combination alarms. Combination carbon monoxide/smoke alarms shall be an acceptable alternative to carbon monoxide alarms. Combination carbon monoxide/smoke alarms shall be listed in accordance with UL 2034 and UL 217.

Combination carbon monoxide/smoke alarms shall comply with Section 915, and all requirements for listing and approval by the Office of the State Fire Marshal for smoke alarms.

915.4.4 Interconnection. *Where more than one carbon monoxide alarm is required to be installed within a dwelling unit or within a sleeping unit in Group R occupancies, the alarms shall be interconnected in a manner that activation of one alarm shall activate all of the alarms in the individual unit.*

Exception: *Interconnection is not required in existing buildings, built prior to January 1, 2011, under any of the following conditions:*

1. Physical interconnection is not required where listed wireless alarms are installed and all alarms sound upon activation of one alarm.

2. No construction is taking place.

3. Repairs or alterations do not result in the removal of interior wall and ceiling finishes exposing the structure in areas/spaces where carbon monoxide alarms are required.

4. Repairs or alterations are limited to the exterior surfaces of dwellings, such as the replacement of roofing or siding, or the addition or replacement of windows or doors, or the addition of a porch or deck.

5. Work is limited to the installation, alteration or repair of plumbing, mechanical, or electrical systems, which do not result in the removal of interior wall or ceiling finishes exposing the structure in areas/spaces where carbon monoxide alarms are required.

915.5 Carbon monoxide detection systems. Carbon monoxide detection systems shall be an acceptable alternative to carbon monoxide alarms and shall comply with Sections 915.5.1 through 915.5.3.

915.5.1 General. Carbon monoxide detection systems shall comply with NFPA 720. Carbon monoxide detectors shall be listed in accordance with UL 2075.

915.5.2 Locations. Carbon monoxide detectors shall be installed in the locations specified in Section 915.2 *or NFPA 720*. ~~These locations supersede the locations specified in NFPA 720.~~

915.5.3 Combination detectors. Combination carbon monoxide/smoke detectors installed in carbon monoxide detection systems shall be an acceptable alternative to carbon monoxide detectors, provided they are listed in accordance with UL 2075 and UL 268.

Combination carbon monoxide/smoke detectors shall comply with all requirements for listing and approval by the Office of the State Fire Marshal for smoke alarms.

915.6 Maintenance. Carbon monoxide alarms and carbon monoxide detection systems shall be maintained in accordance with ~~the International Fire Code~~ *NFPA 720. Carbon monoxide alarms and carbon monoxide detectors that become inoperable or begin producing end-of-life signals shall be replaced.*

915.7 Visible alarms. *In buildings containing covered multifamily dwellings as defined in Chapter 2, all required carbon monoxide alarms shall be equipped with the capability to support visible alarm notification in accordance with NFPA 720.*

NOTE:
Authority Cited: Health and Safety Code Sections 17040, 17050, 17920.9, 17921, 17921.3, 17921.6, 17921.10, 17922, 17922.6, 17922.12, 17927, 17928, 17959.6, 18300, 18552, 18554, 18620, 18630, 18640, 18670, 18690, 18691, 18865, 18871.3, 18871.4, 18873, 18873.1, 18873.2, 18873.3, 18873.4, 18873.5, 18938.3, 18944.11 and 19990; and Government Code Section 12955.1.

Reference: Health and Safety Code Sections 17000 through 17062.5, 17910 through 17995.5, 18200 through 18700, 18860 through 18874, and 19960 through 19997; and Government Code Sections 12955.1 and 12955.1.1.

---

13. HCD proposes to adopt Chapter 10 from the 2015 International Building Code into the 2016 California Building Code with new, existing, and modified existing amendments as follows:

CHAPTER 10
MEANS OF EGRESS

SECTION 1002
DEFINITIONS

GUARD *((HCD 1, & HCD 2 & HCD 1-AC) or GUARDRAIL).*

SECTION 1003
GENERAL MEANS OF EGRESS

1003.1 Applicability. The general requirements specified in Sections 1003 through 1015 shall apply to all three elements of the means of egress system, in addition to those specific requirements for the exit access, the exit and the exit discharge detailed elsewhere in this chapter.

(HCD 1-AC) In addition to the requirement of this chapter, means of egress, which provide access to, or egress from, buildings or facilities where accessibility is required for applications listed in Section 1.8.2.1.2 regulated by the Department of Housing and Community Development, shall also comply with Chapter 11A.

1003.2 Ceiling height. The means of egress shall have a ceiling height of not less than 7 feet 6 inches (2286 mm).

Exceptions:

1. Sloped ceilings in accordance with Section 1208.2.

... (No change to text)

7. The clear height of floor levels in vehicular and pedestrian traffic areas of public and private parking garages in accordance with Section 406.4.1.
~~*(HCD 1-AC) The clear height of vehicle and pedestrian areas required to be accessible, or identified as accessible, shall comply with Chapter 11A.*~~

8. Areas above and below mezzanine floors in accordance with Section 505.2.

1003.3 Protruding objects. ... (No change to text)

1003.3.4 Clear width. Protruding objects shall not reduce the minimum clear width of accessible routes *as required in Chapter 11A.*

1003.5 Elevation change. Where changes in elevation of less than 12 inches (305 mm) exist in the means of egress, sloped surfaces shall be used. Where the slope is greater than one unit vertical in 20 units horizontal (5 percent slope), ramps complying with Section 1012 shall be used. Where the difference in elevation is 6 inches (152 mm) or less, the ramp shall be equipped with either handrails or floor finish materials that contrast with adjacent floor finish materials.

Exceptions:

1. A single step with a maximum riser height of 7 inches (178 mm) is permitted for buildings with occupancies in Groups F, H, R-2, R-3, S and U at exterior doors not required to be accessible by Chapter 11*A*.

2. A stair with a single riser or with two risers and a tread is permitted at locations not required to be accessible by Chapter 11*A* where the risers and treads comply with Section 1011.5, the minimum depth of the tread is 13 inches (330 mm) and at least one handrail complying with Section 1014 is provided within 30 inches (762 mm) of the centerline of the normal path of egress travel on the stair.

3. A step is permitted in aisles serving seating that has a difference in elevation less than 12 inches (305 mm) at locations not required to be accessible by Chapter 11*A*, provided that the risers and treads comply with Section 1029.13 and the aisle is provided with a handrail complying with Section 1029.15.

Throughout a story in a Group I-2 occupancy, any change in elevation in portions of the means of egress that serve nonambulatory persons shall be by means of a ramp or sloped walkway.

SECTION 1006
NUMBER OF EXITS AND EXIT ACCESS DOORWAYS
(Formerly Section 1015
EXIT AND EXIT ACCESS DOORWAYS)

1006.2.2.3 (Formerly 1015.5) Refrigerated rooms or spaces. Rooms or spaces having a floor area larger than 1,000 square feet (93 m^2), containing a refrigerant evaporator and maintained at a temperature below 68°F (20°C), shall have access to not less than two exits or exit access doors.

Exit access travel distance shall be determined as specified in Section 1017.1, but all portions of a refrigerated room or space shall be within 150 feet (45 720 mm) of an exit or exit access doorway where such rooms are not protected by an approved automatic sprinkler system. Egress is allowed through adjoining refrigerated rooms or spaces.

Exception: Where using refrigerants in quantities limited to the amounts based on the volume set forth in the ~~International~~ *California* Mechanical Code.

SECTION 1009 (Formerly 1007)
ACCESSIBLE MEANS OF EGRESS

1009.1 (Formerly 1007.1) Accessible means of egress required. Accessible means of egress shall comply with this section. Accessible spaces shall be provided with not less than one accessible means of egress. Where more than one means of egress are required by Section 1006.2 or 1006.3 from any accessible space, each accessible portion of the space shall be served by ~~not less than two~~ accessible means of egress *in at least the same number as required by Sections ~~1015.1 or 1021.1~~ 1006.2 or 1006.3. In addition to the requirements of this chapter, means of egress, which provide access to, or egress from, buildings for persons with disabilities, shall also comply with the requirements of Chapter 11A.*

Exceptions:

1. Accessible means of egress are not required to be provided in existing buildings.
2. One accessible means of egress is required from an accessible mezzanine level in accordance with Section 1009.3, 1009.4 or 1009.5, *and Chapter 11A.*
3. In assembly areas with ramped aisles or stepped aisles, one accessible means of egress is permitted where the common path of egress travel is accessible and meets the requirements in Section 1029.8, *and Chapter 11A.*

1009.2 (Formerly 1007.2) Continuity and components. Each required accessible means of egress shall be continuous to a public way and shall consist of one or more of the following components:

1. Accessible routes complying with ~~Section 1104~~ *Chapter 11A, Sections 1110A.1 and 1120A.*
2. Interior exit stairways complying with Sections 1009.3 and 1023, *and Chapter 11A, Section 1123A.*
3. Exit access stairways complying with Sections 1009.3 and 1019.3 or 1019.4, *and Chapter 11A, Section 1123A.*
4. Exterior exit stairways complying with Sections 1009.3 and 1027, and *Chapter 11A, Section 1115A;* and serving levels other than the level of exit discharge.
5. Elevators complying with Section 1009.4 *and Chapter 11A, Section 1124A.*
6. Platform lifts complying with Section 1009.5 *and Chapter 11A, Section 1124A.*
7. Horizontal exits complying with Section 1026.
8. Ramps complying with Section 1012 *and Chapter 11A, Sections 1114A and 1122A.*
9. Areas of refuge complying with Section 1009.6.
10. Exterior areas for assisted rescue complying with Section 1009.7 serving exits at the level of exit discharge.

1009.3 (Formerly 1007.3) Stairways. In order to be considered part of an accessible means of egress, a stairway between stories shall have a clear width of 48 inches (1219 mm) minimum between handrails and shall either incorporate an area of refuge within an enlarged floor-level landing or shall be accessed from an area of refuge complying with Section 1009.6. Exit access stairways that connect levels in the same story are not permitted as part of an accessible means of egress.

***(HCD 1-AC)** In addition, exit stairways shall comply with Chapter 11A, Sections 1115A and 1123A.*

1009.5 (Formerly 1007.5) Platform lifts. Platform lifts shall be permitted to serve as part of an accessible means of egress where allowed as part of a required accessible route in ~~Section 1109.8 except for Item 10.~~ *Chapter 11A, Sections 1121A and 1124A.1.* Standby power for the platform lift shall be provided in accordance with Chapter 27.

1009.6 (Formerly 1007.6) Area of refuge....(No change to text)

1009.6.3 (Formerly 1007.6.1) Size. Each area of refuge shall be sized to accommodate ~~one~~ *two* wheelchair space*s that are not less than* ~~of~~ 30 inches by 48 inches (762 mm by 1219 mm). *The total number of such 30-inch by 48-inch (762 mm by 1219 mm) spaces per story shall be not less than one for every 200 persons of calculated occupant load served by the area of refuge.* ~~for each 200 occupants or portion thereof, based on occupant load of the area of refuge and areas served by the area of refuge.~~ Such wheelchair spaces shall not reduce the required means egress width. Access to any of the required wheelchair spaces in an area of refuge shall not be obstructed by more than one adjoining wheelchair space.

***Exception:** The enforcing agency may reduce the size of each required area of refuge to accommodate one wheelchair space that is not less than 30 inches by 48 inches (762 mm by 1219 mm) on floors where the occupant load is less than 200.*

1009.8 (Formerly 1007.8) Two way communication. ... (No change to text)

1009.8.1 (Formerly 1007.8.1) System requirements. ... (No change to text)

***1009.8.1.1* (Formerly 1007.8.1.1) *Visible communication method. (HCD 1-AC)** A button complying with Section 1138A.4 in the area of refuge shall activate both a light in the area of refuge indicating that rescue has been requested and a light at the central control point indicating that rescue is being requested. A button at the central control point shall activate both a light at the central control point and a light in the area of refuge indicating that the request has been received.*

1009.8.2 Directions. Directions for the use of the two-way communication system, instructions for summoning assistance via the two-way communication system and written identification of the location shall be posted adjacent to the two-way communication system. Signage shall comply with ~~the ICC A117.~~1 *Chapter 11A, Section 1143A* requirements for visual characters.

1009.9 (Formerly 1007.9) Signage. Signage indicating special accessibility provisions shall be provided as shown:

1. Each door providing access to an area of refuge from an adjacent floor area shall be identified by a sign stating: AREA OF REFUGE.
2. Each door providing access to an exterior area for assisted rescue shall be identified by a sign stating: EXTERIOR AREA FOR ASSISTED RESCUE.

Signage shall comply with ~~the ICC A117.~~1 *Chapter 11A, Section 1143A* requirements for visual characters and include the International Symbol of Accessibility. Where exit sign illumination is required by Section 1013.3, the signs shall be illuminated. Additionally, visual characters, raised character and braille signage complying with ~~ICC A117.1~~ *Chapter 11A, Section 1143A, and the International Symbol of Accessibility,* shall be located at each door to an area of refuge and exterior area for assisted rescue in accordance with Section 1013.4. *The International Symbol of Accessibility shall comply with Chapter 11A, Section 1143A.*

1009.11 Instructions. In areas of refuge and exterior areas for assisted rescue, instructions on the use of the area under emergency conditions shall be posted. Signage shall comply with ~~the ICC A117.~~1 *Chapter 11A, Section 1143A* requirements for visual characters. The instructions shall include all of the following:

1. Persons able to use the exit stairway do so as soon as possible, unless they are assisting others.

2. Information on planned availability of assistance in the use of stairs or supervised operation of elevators and how to summon such assistance.

3. Directions for use of the two-way communication system where provided.

~~1007.12~~ 1009.12 Alarms/emergency warning systems/accessibility. *If emergency warning systems are required, they shall activate a means of warning the hearing impaired. Emergency warning systems as part of the fire-alarm system shall be designed and installed in accordance with NFPA 72 as amended in Chapter 35.*

SECTION 1010 (Formerly 1008)
DOORS, GATES AND TURNSTILES

1010.1.1 (Formerly 1008.1.1) Size of doors. The required capacity of each door opening shall be sufficient for the occupant load thereof and shall provide a minimum clear width of 32 inches (813 mm). Clear openings of doorways with swinging doors shall be measured between the face of the door and the stop, with the door open 90 degrees (1.57 rad). Where this section requires a minimum clear width of 32 inches (813 mm) and a door opening includes two door leaves without a mullion, one leaf shall provide a clear opening width of 32 inches (813 mm). The maximum width of a swinging door leaf shall be 48 inches (1219 mm) nominal. Means of egress doors in a Group I-2 occupancy used for the movement of beds shall provide a clear width not less than 41 ½ inches (1054 mm). The height of door openings shall not be less than 80 inches (2032 mm).

Exceptions:

1. The minimum and maximum width shall not apply to door openings that are not part of the required means of egress in Group R-2 and R-3 occupancies.

2 ... (No change to text)

3. ... (No change to text)

4. ... (No change to text)

5. ... (No change to text)

6. ... (No change to text)

7. In other than Group R-1 occupancies, the minimum widths shall not apply to interior egress doors within a dwelling unit or sleeping unit that is not required to be ~~an Accessible unit, Type A unit or Type B unit~~ *adaptable or accessible as specified in Chapter 11A.*

~~8. Door openings required to be accessible within Type B units shall have a minimum clear width of 31.75 inches (806 mm).~~

~~9~~ 8. Doors to walk-in freezers and coolers less than 1,000 square feet (93 m2) in area shall have a maximum width of 60 inches (1524 mm).

~~10~~ 9. In Group R-1 dwelling units or sleeping units not required to be ~~Accessible units~~ *adaptable or accessible as specified in Chapter 11A*, the minimum width shall not apply to doors for showers or saunas.

1010.1.4.1 (Formerly 1008.1.4.1) Revolving doors. Revolving doors shall comply with the following:

1. Revolving doors shall comply with BHMA A156.27 and shall be installed in accordance with the manufacturer's instructions.

... (No change to text)

7. **(Formerly Item 5)** Revolving doors shall not be part of an accessible route required by Section 1009 and ~~Chapter 11~~ *Chapter 11A.*

1010.1.5 (Formerly 1008.1.5) Floor elevation. There shall be a floor or landing on each side of a door. Such floor or landing shall be at the same elevation on each side of the door. Landings shall be level except for exterior landings, which are permitted to have a slope not to exceed 0.25 unit vertical in 12 units horizontal (2-percent slope).

Exceptions:

1. Doors serving individual dwelling units in Groups R-2 and R-3 where the following apply:

2. ... (No change to text)

3. In Group R-3 occupancies not required to be ~~Accessible units, Type A units or Type B units~~ *adaptable or accessible*, the landing at an exterior doorway shall not be more than 7 3/4 inches (197 mm) below the top of the threshold, provided the door, other than an exterior storm or screen door, does not swing over the landing.

4. ... (No change to text)

5. Exterior decks, patios or balconies that are part of ~~*Type B*~~ *adaptable or accessible* dwelling units, have impervious surfaces and that are not more than 4 inches (102 mm) below the finished floor level of the adjacent interior space of the dwelling unit. *See also Chapter 11A, Section 1132A.4.*

6. Doors serving equipment spaces not required to be accessible in accordance with Section 1103.2.9 and serving an occupant load of five or less shall be permitted to have a landing on one side to be not more than 7 inches (178 mm) above or below the landing on the egress side of the door.

1010.1.7 (Formerly 1008.1.7) Thresholds. Thresholds at doorways shall not exceed 3/4 inch (19.1 mm) in height above the finished floor or landing for sliding doors serving dwelling units or 1/2 inch (12.7 mm) above the finished floor or landing for other doors. Raised thresholds and floor level changes greater than 1/4 inch (6.4 mm) at doorways shall be beveled with a slope not greater than one unit vertical in two units horizontal (50-percent slope).

Exceptions:

1. In occupancy Group R-2 or R-3, threshold heights for sliding and side-hinged exterior doors shall be permitted to be up to 7 3/4 inches (197 mm) in height if all of the following apply:

   1.1 The door is not part of the required means of egress.

   1.2 The door is not part of an accessible route as required by Chapter 11*A*.

   1.3 The door is not part of an ~~Accessible unit, Type A unit or Type B unit~~ *adaptable or accessible dwelling unit.*

2. In ~~Type B~~ *adaptable or accessible dwelling* units, where Exception 5 to Section 1010.1.5 permits a 4-inch (102 mm) elevation change at the door, the threshold height on the exterior side of the door shall not exceed 4 3/4 inches (120 mm) in height above the exterior deck, patio or balcony for sliding doors or 4 1/2 inches (114 mm) above the exterior deck, patio or balcony for other doors.

1010.1.8 (Formerly 1008.1.8) Door arrangement. Space between two doors in a series shall be 48 inches (1219 mm) minimum plus the width of a door swinging into the space. Doors in a series shall swing either in the same direction or away from the space between the doors.

Exceptions:

1. The minimum distance between horizontal sliding power-operated doors in a series shall be 48 inches (1219 mm).

2. ... (No change to text)

3. Doors within individual dwelling units in Groups R-2 and R-3 occupancies other than ~~within Type A~~ *adaptable or accessible* dwelling units.

1010.1.9.1 (Formerly 1008.1.9.1) Hardware. Door handles, pulls, latches, locks and other operating devices on doors required to be accessible by Chapter 11*A* shall not require tight grasping, tight pinching or twisting of the wrist to operate.

SECTION 1012 (Formerly 1010)
RAMPS

1012.1 (Formerly 1010.1) Scope. The provisions of this section shall apply to ramps used as a component of a means of egress.

Exceptions:

1. Ramped aisles within assembly rooms or spaces shall comply with the provisions in Section 1029.

2. Curb ramps shall comply with ~~ICC A117.1~~ *Chapter 11A*.
3. Vehicle ramps in parking garages for pedestrian exit access shall not be required to comply with Sections 1012.3 through 1012.10 where they are not an accessible route serving accessible parking spaces, other required accessible elements or part of an accessible means of egress.

1012.6.3 (Formerly 1010.7.3) Length. The landing length shall be 60 inches (1525 mm) minimum.

Exceptions:

1. In Group R-2 and R-3 individual dwelling and sleeping units that are not required to be ~~Accessible units, Type A units or Type B units~~ *accessible* in accordance with ~~Section 1107~~ *Chapter 11A*, landings are permitted to be 36 inches (914 mm) minimum.
2. Where the ramp is not a part of an accessible route, the length of the landing shall not be required to be more than 48 inches (1220 mm) in the direction of travel.

1012.6.4 (Formerly 1010.7.4) Change in direction. Where changes in direction of travel occur at landings provided between ramp runs, the landing shall be 60 inches by 60 inches (1524 mm by 1524 mm) minimum.

Exception: In Group R-2 and R-3 individual dwelling or sleeping units that are not required to be ~~Accessible units, Type A units or Type B units~~ *accessible* in accordance with ~~Section 1107~~ *Chapter 11A*, landings are permitted to be 36 inches by 36 inches (914 mm by 914 mm) minimum.

1012.6.5 (Formerly 1010.7.5) Doorways. Where doorways are located adjacent to a ramp landing, maneuvering clearances required ~~by ICC A117.1~~ *for accessibility* are permitted to overlap the required landing area *as specified in Chapter 11A.*

1012.10 (Formerly 1010.10) Edge protection. Edge protection complying with Section 1012.10.1 or 1012.10.2 shall be provided on each side of ramp runs and at each side of ramp landings.

Exceptions:

1. Edge protection is not required on ramps that are not required to have handrails, provided they have flared sides that comply with ~~the ICC A117.1 curb ramp provisions~~ *Chapter 11A*.
2. Edge protection is not required on the sides of ramp landings serving an adjoining ramp run or stairway.
3. Edge protection is not required on the sides of ramp landings having a vertical drop off of not more than 1/2 inch (12.7 mm) within 10 inches (254 mm) horizontally of the required landing area.
4. In assembly spaces with fixed seating, edge protection is not required on the sides of ramps where the ramps provide access to the adjacent seating and aisle access ways.

SECTION 1013 (Formerly 1011)
EXIT SIGNS

1013.4 (Formerly 1011.4) Raised character and braille exit signs. A sign stating EXIT in visual characters, raised characters and braille and complying with ~~ICC A117.1~~ *Chapter 11A, Section 1143A* shall be provided adjacent to each door to an area of refuge, an exterior area for assisted rescue, an exit stairway, an exit stairway or ramp, an exit passageway and the exit discharge.

SECTION 1014
HANDRAILS

1014.8 Projections. On ramps and on ramped aisles that are part of an accessible route, the clear width between handrails shall be 36 inches (914 mm) minimum. Projections into the required width of aisles, stairways and ramps at each side shall not exceed 4 1/2 inches (114 mm) at or below the handrail height. Projections into the required width shall not be limited above the minimum headroom height required in Section 1011.3. Projections due to intermediate handrails shall not constitute a reduction in the egress width. Where a pair of intermediate handrails are provided within the stairway width without a walking surface between the pair of intermediate handrails and the distance between the pair of intermediate handrails is greater than 6 inches (152 mm), the available egress width shall be reduced by the distance between the closest edges of each such intermediate pair of handrails that is greater than 6 inches (152 mm).

(HCD 1-AC) In addition, projections shall comply with Chapter 11A, when applicable.

SECTION 1015 (Formerly 1013)
GUARDS

1015.3 (Formerly 1013.3) Height. Required guards shall not be less than 42 inches (1067 mm) high, measured vertically as follows:

1. From the adjacent walking surfaces.
2. On stairways and stepped aisles, from the line connecting the leading edges of the tread nosings.
3. On ramps and ramped aisles, from the ramp surface at the guard.

Exceptions:

~~1. For occupancies in Group R-3 not more than three stories above grade in height and within individual dwelling units in occupancies in Group R-2 not more than three stories above grade in height with separate means of egress, required guards shall be not less than 36 inches (914 mm) in height measured vertically above the adjacent walking surfaces or adjacent fixed seating.~~

~~2.~~ *1.* For occupancies in Group R-3, and within individual dwelling units in occupancies in Group R-2, guards on the open sides of stairs shall have a height not less than 34 inches (864 mm) measured vertically from a line connecting the leading edges of the treads.

~~3.~~ *2.* For occupancies in Group R-3, and within individual dwelling units in occupancies in Group R-2, where the top of the guard also serves as a handrail on the open sides of stairs, the top of the guard shall not be less than 34 inches (864 mm) and not more than 38 inches (965 mm) measured vertically from a line connecting the leading edges of the treads.

~~4.~~ *3.* The guard height in assembly seating areas shall comply with Section 1029.16 as applicable.

~~5.~~ *4.* Along alternating tread devices and ship ladders, guards whose top rail also serves as a handrail shall have height not less than 30 inches (762 mm) and not more than 34 inches (864 mm), measured vertically from the leading edges of the device tread nosing.

1015.8 Window openings. Windows in Group *R1,* R-2 and R-3 buildings including dwelling units, where the top of the sill of an operable window opening is located less than 36 inches above the finished floor and more than 72 inches (1829 mm) above the finished grade or other surface below on the exterior of the building, shall comply with one of the following:

1. Operable windows where the top of the sill of the opening is located more than 75 feet (22 860 mm) above the finished grade or other surface below and that are provided with window fall prevention devices that comply with ASTM F 2006.
2. Operable windows where the openings will not allow a 4-inch-diameter (102 mm) sphere to pass through the opening when the window is in its largest opened position.
3. Operable windows where the openings are provided with window fall prevention devices that comply with ASTM F 2090.
4. Operable windows that are provided with window opening control devices that comply with Section 1015.8.1.

SECTION 1020 (Formerly 1018)
CORRIDORS

1020.5.1 (Formerly 1018.5.1) Corridor ceiling. Use of the space between the corridor ceiling and the floor or roof structure above as a return air plenum is permitted for one or more of the following conditions:

1. The corridor is not required to be of fire-resistance-rated construction;
2. (No change to text)...
3. The air-handling system serving the corridor is shut down upon activation of the air-handling unit smoke detectors required by the ~~International~~ *California* Mechanical Code.

SECTION 1023 (Formerly 1022)
INTERIOR EXIT STAIRWAYS AND RAMPS

1023.9 (Formerly 1022.9) Stairway identification signs. A sign shall be provided at each floor landing in an interior exit stairway and ramp connecting more than three stories designating the floor level, the terminus of the top and bottom of the interior exit stairway and ramp and the identification of the stair or ramp. The signage shall also state the story of, and the direction to, the exit discharge and the availability of roof access from the interior exit stairway and ramp for the fire department. The sign shall be located 5 feet (1524 mm) above the floor landing in a position that is readily visible when the doors are in the open and closed positions. In addition to the stairway identification sign, a floor-level sign in visual characters, raised characters and braille complying with ~~ICC A117.1~~ *Chapter 11A, Section 1143A* shall be located at each floor-level landing adjacent to the door leading from the interior exit stairway and ramp into the corridor to identify the floor level.

NOTE:
Authority Cited: Health and Safety Code Sections 17040, 17050, 17920.9, 17921, 17921.3, 17921.6, 17921.10, 17922, 17922.6, 17922.12, 17927, 17928, 17959.6, 18300, 18552, 18554, 18620, 18630, 18640, 18670, 18690, 18691, 18865, 18871.3, 18871.4, 18873, 18873.1, 18873.2, 18873.3, 18873.4, 18873.5, 18938.3, 18944.11 and 19990; and Government Code Section 12955.1.

Reference: Health and Safety Code Sections 17000 through 17062.5, 17910 through 17995.5, 18200 through 18700, 18860 through 18874, and 19960 through 19997; and Government Code Sections 12955.1 and 12955.1.1.

---

14. HCD proposes NOT to adopt Chapter 11 from the 2015 International Building Code.

CHAPTER 11
ACCESSIBILITY

NOTE:
Authority Cited: Health and Safety Code Sections 17040, 17050, 17920.9, 17921, 17921.3, 17921.6, 17921.10, 17922, 17922.6, 17922.12, 17927, 17928, 17959.6, 18300, 18552, 18554, 18620, 18630, 18640, 18670, 18690, 18691, 18865, 18871.3, 18871.4, 18873, 18873.1, 18873.2, 18873.3, 18873.4, 18873.5, 18938.3, 18944.11 and 19990; and Government Code Section 12955.1.

Reference: Health and Safety Code Sections 17000 through 17062.5, 17910 through 17995.5, 18200 through 18700, 18860 through 18874, and 19960 through 19997; and Government Code Sections 12955.1 and 12955.1.1.

---

15. HCD proposes to continue to adopt Chapter 11A from the 2013 California Building Code into the 2016 California Building Code with no modifications.

CHAPTER 11A
HOUSING ACCESSIBILITY

NOTE:
Authority Cited: Health and Safety Code Sections 17040, 17050, 17920.9, 17921, 17921.3, 17921.6, 17921.10, 17922, 17922.6, 17922.12, 17927, 17928, 17959.6, 18300, 18552, 18554, 18620, 18630, 18640, 18670, 18690, 18691, 18865, 18871.3, 18871.4, 18873, 18873.1, 18873.2, 18873.3, 18873.4, 18873.5, 18938.3, 18944.11 and 19990; and Government Code Section 12955.1.

Reference: Health and Safety Code Sections 17000 through 17062.5, 17910 through 17995.5, 18200 through 18700, 18860 through 18874, and 19960 through 19997; and Government Code Sections 12955.1 and 12955.1.1.

---

16. HCD proposes to adopt Chapter 12 from the 2015 International Building Code into the 2016 California Building Code with new and existing amendments as follows:

CHAPTER 12
INTERIOR ENVIRONMENT

SECTION 1203
VENTILATION

1203.1 General. Buildings shall be provided with natural ventilation in accordance with Section 1203.4, or mechanical ventilation in accordance with the ~~International~~ *California* Mechanical Code.

~~Where the air infiltration rate in a dwelling unit is less than 5 air changes per hour when tested with a blower door at a pressure 0.2 inch w.c. (50 Pa) in accordance with Section R402.4.1.2 of the International Energy Conservation Code – Residential Provisions, the dwelling unit shall be ventilated by mechanical means in accordance with Section 403 of the International Mechanical Code. Ambulatory care facilities and Group I-2 occupancies shall be ventilated by mechanical means in accordance with Section 407 of the International Mechanical Code.~~

1203.2 Ventilation required. Enclosed attics and enclosed rafter spaces formed where ceilings are applied directly to the underside of roof framing members shall have cross ventilation for each separate space by ventilation openings protected against the entrance of rain and snow. Blocking and bridging shall be arranged so as not to interfere with the movement of air. An airspace of not less than 1 inch (25 mm) shall be provided between the insulation and the roof sheathing. The net free ventilating area shall be not less than 1/150 of the area of the space ventilated. Ventilators shall be installed in accordance with manufacturer's installation instructions.

Exception: The net free cross-ventilation area shall be permitted to be reduced to 1/300 provided both of the following conditions are met:

1. In Climate Zones ~~6, 7 and 8~~ *14 and 16*, a Class I or II vapor retarder is installed on the warm-in-winter side of the ceiling.
2. At least 40 percent and not more than 50 percent of the required venting area is provided by ventilators located in the upper portion of the attic or rafter space. Upper ventilators shall be located not more than 3 feet (914 mm) below the ridge or highest point of the space, measured vertically, with the balance of the ventilation provided by eave or cornice vents. Where the location of wall or roof framing members conflicts with the installation of upper ventilators, installation more than 3 feet (914 mm) below the ridge or highest point of the space shall be permitted.

1203.2.1 Openings into attic. Exterior openings into the attic space of any building intended for human occupancy shall be protected to prevent the entry of birds, squirrels, rodents, snakes and other similar creatures. Openings for ventilation having a least dimension of 1/16 inch (1.6 mm) minimum and 1/4 inch (6.4 mm) maximum shall be permitted. Openings for ventilation having a least dimension larger than 1/4 inch (6.4 mm) shall be provided with corrosion-resistant wire cloth screening, hardware cloth, perforated vinyl or similar material with openings having a least dimension of 1/16 inch (1.6 mm) minimum and 1/4 inch (6.4 mm) maximum. Where combustion air is obtained from an attic area, it shall be in accordance with Chapter 7 of the ~~International~~ *California* Mechanical Code.

1203.3 Unvented attic and unvented enclosed rafter assemblies. Unvented attics and unvented enclosed roof framing assemblies created by ceilings that are applied directly to the underside of the roof framing members and structural roof sheathing applied directly to the top of the roof framing members/rafters, shall be permitted where all the following conditions are met:

1. The unvented attic space is completely within the building thermal envelope.
2. No interior Class I vapor retarders are installed on the ceiling side (attic floor) of the unvented attic assembly or on the ceiling side of the unvented enclosed roof framing assembly.
3. Where wood shingles or shakes are used, a minimum 1/4-inch (6.4 mm) vented airspace separates the shingles or shakes and the roofing underlayment above the structural sheathing.

4. In Climate Zones ~~5, 6, 7 and 8,~~ *14 and 16*, any air-impermeable insulation shall be a Class II vapor retarder, or shall have a Class II vapor retarder coating or covering in direct contact with the underside of the insulation.

See the California Energy Code, FIGURE 100.1-A —California Climate Zones.

4.1 (HCD 1 & HCD 2) In Climate Zones 14 and 16, a Class I or Class II vapor retarder shall be installed on the indirectly conditioned space side of all insulation in an unvented attic with air-permeable insulation, for condensation control.

5. Insulation shall be located in accordance with the following:

5.1. Item 5.1.1, 5.1.2, 5.1.3 or 5.1.4 shall be met, depending on the air permeability of the insulation directly under the structural roof sheathing. *No insulation shall be required when roof tiles, wood shingles or wood shakes, or any other roofing system using battens and no continuous underlayment is installed. A continuous underlayment shall be considered to exist if sheathing, roofing paper or any continuous layer having a perm rate of no more than one perm under the dry cup method is present.*

5.1.1. Where only air-impermeable insulation is provided, it shall be applied in direct contact with the underside of the structural roof sheathing.

5.1.2. Where air-permeable insulation is provided inside the building thermal envelope, it shall be installed in accordance with Item 5.1. In addition to the air-permeable insulation installed directly below the structural sheathing, rigid board or sheet insulation shall be installed directly above the structural roof sheathing in accordance with the R-values in Table 1203.3 for condensation control.

5.1.3. Where both air-impermeable and air-permeable insulation are provided, the air-impermeable insulation shall be applied in direct contact with the underside of the structural roof sheathing ~~in accordance with Item 5.1.1~~ and shall be in accordance with the R-values in Table 1203.3 for condensation control. The air-permeable insulation shall be installed directly under the air-impermeable insulation.

5.1.4. Alternatively, sufficient rigid board or sheet insulation shall be installed directly above the structural roof sheathing to maintain the monthly average temperature of the underside of the structural roof sheathing above 45°F (7°C). For calculation purposes, an interior air temperature of 68°F (20°C) is assumed and the exterior air temperature is assumed to be the monthly average outside air temperature of the three coldest months.

5.2. Where preformed insulation board is used as the ~~air-permeable~~ *air-impermeable* insulation layer, it shall be sealed at the perimeter of each individual sheet interior surface to form a continuous layer.

Exceptions:

1. Section 1203.3 does not apply to special use structures or enclosures such as swimming pool enclosures, data processing centers, hospitals or art galleries.
2. Section 1203.3 does not apply to enclosures in Climate Zones ~~5 through 8~~ *14 and 16* that are humidified beyond 35 percent during the three coldest months.

TABLE 1203.3
INSULATION FOR CONDENSATION CONTROL

CLIMATE ZONE	MINIMUM R-VALUE OF AIR-IMPERMEABLE INSULATION[a]
~~2B and 3B~~ *6-15* tile roof only	0 (none required)
~~1, 2A, 2B, 3A, 3B, 3C~~ *3-15*	R-5
~~4C~~ *1&2*	R-10
~~4A, 4B~~ *16*	R-15
~~5~~	~~R-20~~

~~6~~	~~R-25~~
~~7~~	~~R-30~~
~~8~~	~~R-35~~

a. Contributes to, but does not supersede, thermal resistance requirements for attic and roof assemblies in ~~Section C402.2.1 of~~ the ~~International~~ *California* Energy ~~Conservation~~ Code

1203.4.2 (Formerly 1203.3.2) Exceptions. The following are exceptions to Sections 1203.4 and 1203.4.1:

1. Where warranted by climatic conditions, ventilation openings to the outdoors are not required if ventilation openings to the interior are provided.
2. ... (No change to text)
3. ... (No change to text)
4. Ventilation openings are not required when the ground surface is covered with a Class I vapor retarder, the perimeter walls are insulated and the space is conditioned in accordance with the ~~International~~ *California* Energy ~~Conservation~~ Code.
5. ... (No change to text)

1203.5 (Formerly 1203.4) Natural ventilation. Natural ventilation of an occupied space shall be through windows, doors, louvers or other openings to the outdoors. The operating mechanism for such openings shall be provided with ready access so that the openings are readily controllable by the building occupants.

(HCD 1) *In employee housing, all openable windows in rooms used for living, dining, cooking or sleeping purposes, and toilet and bath buildings, shall be provided and maintained with insect screening.*

(HCD 1) *Door openings of rooms used for dining, cooking, toilet and bathing facilities in employee housing shall be provided and maintained with insect screening or with solid doors equipped with self-closing devices in lieu thereof, when approved by the enforcement agency.*

(HCD 1) *The windows, doors, louvers or other approved closeable openings not required by Section 1029 may open into a passive solar energy collector for ventilation required by this section. The area of ventilation openings to the outside of the passive solar energy collector shall be increased to compensate for the openings required by the interior space.*

1203.5.2 (Formerly 1203.4.2) Contaminants exhausted. Contaminant sources in naturally ventilated spaces shall be removed in accordance with the ~~International~~ *California* Mechanical Code and the ~~International~~ *California Fire Code.*

1203.5.2.1 (Formerly 1203.4.2.1) Bathrooms. Rooms containing bathtubs, showers, spas and similar bathing fixtures shall be mechanically ventilated in accordance with the ~~International~~ *California* Mechanical Code.

The minimum exhaust rate shall not be less than that established by Table 403.7 "Minimum Exhaust Rates." See California Mechanical Code, Chapter 5, for additional provisions related to environmental air ducts.

(HCD 1) *In addition to the requirements in this section and in the California Mechanical Code, bathrooms in Group R occupancies shall be mechanically ventilated in accordance with the California Green Building Standards Code (CALGreen), Chapter 4, Division 4.5.*

1203.6 (Formerly 1203.5) Other ventilation and exhaust systems. Ventilation and exhaust systems for occupancies and operations involving flammable or combustible hazards or other contaminant sources as covered in the ~~International~~ *California* Mechanical Code or the ~~International~~ *California* Fire Code shall be provided as required by both codes.

SECTION 1204
TEMPERATURE CONTROL

1204.1 Equipment and systems. Interior spaces intended for human occupancy shall be provided with active or passive space-heating systems capable of maintaining an indoor temperature of not less than 68°F (20°C) at a point 3 feet (914 mm) above the floor on the design heating day.

Exceptions:

1. Space heating systems are not required for:
   ~~1~~ *1.1*. Interior spaces where the primary purpose of the space is not associated with human comfort.
   ~~2~~ *1.2* Group F, H, S or U occupancies.
2. ***(HCD 1)*** *For limited-density owner-built rural dwellings, a heating facility or appliance shall be installed in each dwelling subject to the provisions of Subchapter 1, Chapter 1, Title 25, California Code of Regulations, commencing with Section 74; however, there shall be no specified requirement for heating capacity or temperature maintenance. The use of solid-fuel or solar-heating devices shall be deemed as complying with the requirements of this section. If nonrenewable fuel is used in these dwellings, rooms so heated shall meet current installation standards.*
3. ... (No change to text)
4. ***(HCD 1)*** *When a passive solar energy collector is designed as a conditioned area it shall comply with the California Energy Code~~, Title 24, Part 6~~. Nonconditioned passive solar energy collectors are exempt from ~~Title 24, Part 6~~ compliance with the California Energy Code.*

SECTION 1205
LIGHTING

1205.1 General. Every space intended for human occupancy shall be provided with natural light by means of exterior glazed openings in accordance with Section 1205.2 or shall be provided with artificial light in accordance with Section 1205.3. Exterior glazed openings shall open directly onto a public way or onto a yard or court in accordance with Section 1206.

(HCD 1) Glazed openings may open into a passive solar energy collector provided the area of exterior glazed openings in the passive solar energy collector is increased to compensate for the area required by the interior space.

1205.4 Stairway illumination. Stairways within dwelling units and exterior stairways serving a dwelling unit shall have an illumination level on tread runs of not less than 1 footcandle (11 lux). Stairways in other occupancies shall be governed by Chapter 10.

1205.4.1 Controls. The control for activation of the required stairway lighting shall be in accordance with ~~NFPA 70~~ *the California Electrical Code.*

SECTION 1206
YARDS OR COURTS

1206.3.3 Court drainage. The bottom of every court shall be properly graded and drained to a public sewer or other approved disposal system complying with the ~~International~~ *California* Plumbing Code.

SECTION 1207
SOUND TRANSMISSION

1207.3 Structure-borne sound. Floor/ceiling assemblies between dwelling units and sleeping units or between a dwelling unit or sleeping unit and a public or service area within the structure shall have an impact insulation class (IIC) rating of not less than 50, or not less than 45 if field tested, when tested in accordance with ASTM E 492.

Exception: *Impact sound insulation is not required for floor-ceiling assemblies over nonhabitable rooms or spaces not designed to be occupied, such as garages, mechanical rooms or storage areas.*

1207.4 Allowable interior noise levels. *Interior noise levels attributable to exterior sources shall not exceed 45 dB in any habitable room. The noise metric shall be either the day-night average sound level (Ldn) or the community noise equivalent level (CNEL), consistent with the noise element of the local general plan.*

SECTION 1208
INTERIOR SPACE DIMENSIONS

1208.1 Minimum room widths. Habitable spaces, other than a kitchen, shall not be less than 7 feet (2134 mm) in any plan dimension. Kitchens shall have a clear passageway of not less than 3 feet (914 mm) between counter fronts and appliances or counter fronts and walls.

(HCD 1) For limited-density owner-built rural dwellings, there shall be no requirements for room dimensions, provided there is adequate light and ventilation and adequate means of egress.

1208.4 Efficiency dwelling units. ~~An efficiency living unit shall conform to the requirements of the code except as modified herein:~~ *(HCD 1) Unless modified by local ordinance pursuant to Health and Safety Code Section 17958.1, efficiency dwelling units shall comply with the following:*

1. The unit shall have a living room of not less than 220 square feet (20.4 m^2) of floor area. An additional 100 square feet (9.3 m^2) of floor area shall be provided for each occupant of such unit in excess of two.

.... (No change to text)

4. The unit shall be provided with a separate bathroom containing a water closet, lavatory and bathtub or shower.

SECTION 1209
ACCESS TO UNOCCUPIED SPACES

1209.3 Mechanical appliances. Access to mechanical appliances installed in under-floor areas, in attic spaces and on roofs or elevated structures shall be in accordance with the ~~International~~ *California* Mechanical Code.

SECTION 1210
TOILET AND BATHROOM REQUIREMENTS

1210.1 Required fixtures. The number and type of plumbing fixtures provided in any occupancy shall comply with ~~Chapter 29~~ *the California Plumbing Code.*

SECTION 1211 (HCD 1 & HCD 2)
GARAGE DOOR SPRINGS

1211.1 General. *This section shall apply to applications listed in Sections 1.8.2.1.1 and 1.8.2.1.3 regulated by the Department of Housing and Community Development.*

1211.1.1 Extension garage door springs. *Every extension garage door spring sold or offered for sale, whether new or as a replacement, or installed in any garage or carport which is accessory to an apartment house, hotel, motel or dwelling shall conform to the following requirements:*

Hard-drawn spring wire shall conform to ASTM A 227- 06 (2011) or a more current version, and shall be made by the steel processes described therein, conforming to the chemical composition requirements listed and meeting the standards of steel heat as set forth by the ladle analysis. Wire tensile strength and dimension variations shall meet the prescribed properties of established standards.

Oil-tempered wire shall conform to ASTM A 229 - 12 or a more current version, and shall be made by the steel processes described therein, conforming to the chemical composition requirements listed and meeting the standards of steel heat as set forth by the ladle analysis. Wire tensile strength and dimension variations shall meet the prescribed properties of established standards.

Extension springs shall be fabricated from either hard-drawn spring wire or oil-tempered wire as specified above.

1211.2 Design standards. *Minimum design standard shall be 9,000 cycles. (One cycle is equal to door opening plus door closing at maximum working load.)*

1211.3 Certification. *Mill certification of wire physical tests and chemical properties shall be kept on file by the spring manufacturer.*

Physical cycling tests shall be performed for each extension spring design and shall be certified by an approved testing agency acceptable to the department and reports kept on file by the manufacturer.

Containment devices shall be physically tested for each extension spring design by installing the device on the spring and by destroying the spring at maximum recommended stretch. Containment tests shall be certified by an approved testing agency acceptable to the department and reports kept on file by the manufacturer.

1211.4 Containment devices. *Each extension spring shall be equipped with an approved device capable of restraining the spring or any part thereof in the event it breaks.*

1211.5 Identification. *Extension springs shall be permanently identified as to manufacturer and also to indicate maximum recommended stretch. Both extension springs and containment devices shall bear information stating that they have been manufactured in accordance with requirements of the California Department of Housing and Community Development.*

1211.6 Installation. *Installation of extension springs, containment devices and hardware shall be in accordance with the manufacturer's installation instructions. Instructions shall be provided by the manufacturer and shall specify the approved method of restraint and maximum recommended stretch. Unless otherwise permitted by the manufacturer's installation instructions, the hardware and extension springs shall be mounted to nominal 12 by 6 framing members, conforming to the applicable provisions of Section 2303.*

SECTION 1212 (HCD 1)
POLLUTANT CONTROL

1212.1 Finish material pollutant control. *Finish materials, including adhesives, sealants, caulks, paints and coatings, aerosol paints and coatings, carpet systems, carpet cushion, carpet adhesive, resilient flooring systems, and composite wood products shall meet the volatile organic compound (VOC) emission limits in accordance with the California Green Building Standards Code (CALGreen), Chapter 4, Division 4.5.*

NOTE:
Authority Cited: Health and Safety Code Sections 17040, 17050, 17920.9, 17921, 17921.3, 17921.6, 17921.10, 17922, 17922.6, 17922.12, 17927, 17928, 17959.6, 18300, 18552, 18554, 18620, 18630, 18640, 18670, 18690, 18691, 18865, 18871.3, 18871.4, 18873, 18873.1, 18873.2, 18873.3, 18873.4, 18873.5, 18938.3, 18944.11 and 19990; and Government Code Section 12955.1.

Reference: Health and Safety Code Sections 17000 through 17062.5, 17910 through 17995.5, 18200 through 18700, 18860 through 18874, and 19960 through 19997; and Government Code Sections 12955.1 and 12955.1.1.

---

17. HCD proposes to repeal and not bring forward the existing California amendments from the 2013 California Building Code, Section 1203.2, Exceptions.

CHAPTER 12
INTERIOR ENVIRONMENT

SECTION 1203
VENTILATION

1203.2 Attic spaces. Enclosed attics and enclosed rafter spaces formed where ceilings are applied directly to the underside of roof framing members shall have cross ventilation for each separate space by ventilation openings protected against the entrance of rain and snow. Blocking and bridging shall be arranged so as not to interfere with the movement of air. An airspace of not less than 1 inch (25 mm) shall be provided between the insulation and the roof sheathing. The net free ventilating area shall not be less than 1/150th of the area of the space ventilated.

Exceptions:

1. ~~*(Not adopted by HCD)*~~ The net free cross-ventilation area shall be permitted to be reduced to 1/300 provided that not less than 50 percent and not more than 80 percent of the required ventilating area

provided by ventilators located in the upper portion of the space to be ventilated at least 3 feet (914 mm) above eave of cornice vents with the balance of the required ventilation provided by eave or cornice vents.

2. ~~(Not adopted by HCD)~~ The net free cross-ventilation area shall be permitted to be reduced to 1/300 provided where a Class I or II vapor barrier is installed on the warm-in-winter side of the ceiling.

3. Attic ventilation shall not be required when determined not necessary by the building official due to atmospheric or climatic conditions.

~~4. (HCD 1 & HCD 2) The net cross-ventilation area shall be permitted to be reduced to 1/300 provided that at least 40 percent and not more than 50 percent of the required ventilating area is provided by ventilators located in the upper portion of the attic or rafter space. Upper ventilators shall be located no more than 3 feet (914 mm) below the ridge or highest point of the space, measured vertically, with the balance of the required ventilation provided by eave or cornice vents. Where the location of wall or roof framing members conflicts with the installation of upper ventilators, installation more than 3 feet (914 mm) below the ridge or highest point of the space shall be permitted.~~

~~5. (HCD 1 & HCD 2) The net cross-ventilation area shall be permitted to be reduced to 1/300 in Climate Zones 14 and 16, where a Class I or II vapor retarder is installed on the warm-in-winter side of the ceiling.~~

---

18. HCD proposes NOT to adopt Chapter 13 from the 2015 International Building Code.

CHAPTER 13
ENERGY EFFICIENCY

NOTE:
Authority Cited: Health and Safety Code Sections 17040, 17050, 17920.9, 17921, 17921.3, 17921.6, 17921.10, 17922, 17922.6, 17922.12, 17927, 17928, 17959.6, 18300, 18552, 18554, 18620, 18630, 18640, 18670, 18690, 18691, 18865, 18871.3, 18871.4, 18873, 18873.1, 18873.2, 18873.3, 18873.4, 18873.5, 18938.3, 18944.11, and 19990; and Government Code Section 12955.1.

Reference: Health and Safety Code Sections 17000 through 17062.5, 17910 through 17995.5, 18200 through 18700, 18860 through 18874, and 19960 through 19997; and Government Code Sections 12955.1 and 12955.1.1.

---

19. HCD proposes to adopt Chapter 14, except Table 1405.3.2, from the 2015 International Building Code into the 2016 California Building Code with modified existing amendments as follows:

CHAPTER 14
EXTERIOR WALLS

SECTION 1405
INSTALLATION OF WALL COVERINGS

1405.3 Vapor retarders. Vapor retarders as described in Section 1405.3.3 shall be provided in accordance with Sections 1405.3.1 and 1405.3.2, or an approved design using accepted engineering practice for hydrothermal analysis.

1405.3.1 Class I and II vapor retarders. Class I and II vapor retarders shall not be provided on the interior side of frame walls in Zones 1 and 2. Class I vapor retarders shall not be provided on the interior side of frame walls in Zones 3 and 4. Class I or II vapor retarders shall be provided on the interior side of frame walls in Zones 5, 6, 7, 8 and Marine 4. The appropriate zone shall be selected in accordance with Chapter 3 of the International Energy Conservation Code.

(Formerly in Section 1405.3) *(HCD 1 & HCD 2) Class I or II vapor retarders shall be provided on the interior side of frame walls of low-rise residential buildings in Climate Zones 14 and 16, as required in ~~Title 24, Part 6,~~ the California Energy Code (see definition of "Low-rise residential building").*

Exceptions:

1. Basement walls.
2. Below-grade portion of any wall.
3. Construction where moisture or its freezing will not damage the materials.
4. Conditions where Class III vapor retarders are required in Section 1405.3.2.

1405.3.2 (Formerly 1405.3.1) Class III vapor retarders. Class III vapor retarders shall be permitted where any one of the conditions in Table 1405.3.2 is met. Only Class III vapor retarders shall be used on the interior side of frame walls where foam plastic insulating sheathing with a perm rating of less than 1 is applied in accordance with Table 1405.3.2 on the exterior side of the frame wall.

(HCD 1 & HCD 2) Class III vapor retarders shall be permitted where any one of the conditions in Items 1, 2 or 3 below are met. This section shall apply to "Low-rise residential buildings" as defined in ~~Title 24, Part 6,~~ the California Energy Code.

1. *Vented cladding over fiberboard.*
2. *Vented cladding over gypsum.*
3. *Insulated sheathing with R-value ≥ R4.*

Spray foam with a minimum density of 2 lbs/ft^3 applied to the interior cavity side of OSB, plywood, fiberboard, insulating sheathing or gypsum is deemed to meet the insulating sheathing requirement where the spray foam R-value meets or exceeds the specified insulating sheathing R-value.

TABLE 1405.3.2 (Formerly TABLE 1405.3.1)
CLASS III VAPOR RETARDERS
(Not adopted by HCD 1 & HCD 2)

ZONE	CLASS III VAPOR RETARDERS PERMITTED FOR:[a]
Marine 4	Vented cladding over wood structural panels Vented cladding over fiberboard Vented cladding over gypsum Insulated sheathing with *R*-value ≥ R2.5 over 2×4 wall Insulated sheathing with *R*-value ≥ R3.75 over 2×6 wall
5	Vented cladding over wood structural panels Vented cladding over fiberboard Vented cladding over gypsum Insulated sheathing with *R*-value ≥ R5 over 2×4 wall Insulated sheathing with *R*-value ≥ R7.5 over 2×6 wall
6	Vented cladding over fiberboard Vented cladding over gypsum Insulated sheathing with *R*-value ≥ R7.5 over 2×4 wall Insulated sheathing with *R*-value ≥ R11.25 over 2×6 wall
7 and 8	Insulated sheathing with *R* value ≥ R10 over 2×4 wall Insulated sheathing with *R* value ≥ R15 over 2×6 wall

For SI: 1 pound per cubic foot = 16 kg/m^3.

a. Spray foam with a minimum density of 2 lbs/ft^3 applied to the interior cavity side of OSB, plywood, fiberboard, insulating sheathing or gypsum is deemed to meet the insulating sheathing requirement where the spray foam R-value meets or exceeds the specified insulating sheathing R-value.

NOTE:
Authority Cited: Health and Safety Code Sections 17040, 17050, 17920.9, 17921, 17921.3, 17921.6, 17921.10, 17922, 17922.6, 17922.12, 17927, 17928, 17959.6, 18300, 18552, 18554, 18620, 18630, 18640, 18670, 18690, 18691, 18865, 18871.3, 18871.4, 18873, 18873.1, 18873.2, 18873.3, 18873.4, 18873.5, 18938.3, 18944.11, and 19990; and Government Code Section 12955.1.

Reference: Health and Safety Code Sections 17000 through 17062.5, 17910 through 17995.5, 18200 through 18700, 18860 through 18874, and 19960 through 19997; and Government Code Sections 12955.1 and 12955.1.1.

---

20. HCD proposes to adopt Chapter 15 from the 2015 International Building Code into the 2016 California Building Code with existing amendments as follows:

CHAPTER 15
ROOF ASSEMBLIES AND ROOFTOP STRUCTURES

SECTION 1503
WEATHER PROTECTION

1503.4 Roof drainage. Design and installation of roof drainage systems shall comply with Section 1503 of this code and ~~Sections 1106 and 1108, as applicable,~~ *Chapter 11* of the ~~International~~ *California* Plumbing Code.

1503.4.1 Secondary (emergency overflow) drains or scuppers. Where roof drains are required, secondary (emergency overflow) roof drains or scuppers shall be provided where the roof perimeter construction extends above the roof in such a manner that water will be entrapped if the primary drains allow buildup for any reason. The installation and sizing of secondary emergency overflow drains, leaders and conductors shall comply with ~~Sections 1106 and 1108, as applicable,~~ *Chapter 11* of the ~~International~~ *California* Plumbing Code.

SECTION 1510 (Formerly 1509)
ROOFTOP STRUCTURES

1510.7 (Formerly 1509.7) Photovoltaic systems. Rooftop mounted photovoltaic panels and modules shall be designed in accordance with this section.

1510.7.1 (Formerly 1509.7.1) Wind resistance. Rooftop-mounted photovoltaic panels and modules shall be designed for component and cladding wind loads in accordance with Chapter 16 using an effective wind area based on the dimensions of a single unit frame.

Exception: (HCD-1, HCD-2) *The effective wind area shall be in accordance with Chapter 16 and ASCE 7 Section. 26.2.*

NOTE:
Authority Cited: Health and Safety Code Sections 17040, 17050, 17920.9, 17921, 17921.3, 17921.6, 17921.10, 17922, 17922.6, 17922.12, 17927, 17928, 17959.6, 18300, 18552, 18554, 18620, 18630, 18640, 18670, 18690, 18691, 18865, 18871.3, 18871.4, 18873, 18873.1, 18873.2, 18873.3, 18873.4, 18873.5, 18938.3, 18944.11, and 19990; and Government Code Section 12955.1.
Reference: Health and Safety Code Sections 17000 through 17062.5, 17910 through 17995.5, 18200 through 18700, 18860 through 18874, and 19960 through 19997; and Government Code Sections 12955.1 and 12955.1.1.

---

21. HCD proposes to adopt Chapter 16 from the 2015 International Building Code into the 2016 California Building Code with existing amendments as follows:

CHAPTER 16
STRUCTURAL DESIGN

SECTION 1607
LIVE LOADS

1607.8 Loads on handrails, guards, grab bars, *shower* seats, *dressing room bench seats* and vehicle barriers. Handrails, guards, grab bars, accessible seats, accessible benches and vehicle barriers shall be designed and constructed to the structural loading conditions set forth in this section.

1607.8.1 Handrails and guards. (No change to text)

1607.8.2 Grab bars, shower seats and dressing room bench seats. Grab bars, shower seats and dressing room bench seats shall be designed to resist a single concentrated load of 250 pounds (1.11 kN) applied at any direction on the grab bar or seat so as to produce the maximum load effects.

(HCD 1-AC) See Chapter 11A, Section 1127A.4 for grab bars, shower seats and dressing room bench seats, as applicable.

NOTE:
Authority Cited: Health and Safety Code Sections 17040, 17050, 17920.9, 17921, 17921.3, 17921.6, 17921.10, 17922, 17922.6, 17922.12, 17927, 17928, 17959.6, 18300, 18552, 18554, 18620, 18630, 18640, 18670, 18690, 18691, 18865, 8871.3, 18871.4, 18873, 18873.1, 18873.2, 18873.3, 18873.4, 18873.5, 18938.3, 18944.11 and 19990; and Government Code Section 12955.1.

Reference: Health and Safety Code Sections 17000 through 17062.5, 17910 through 17995.5, 18200 through 18700, 18860 through 18874, and 19960 through 19997; and Government Code Sections 12955.1 and 12955.1.1.

---

22. HCD proposes to repeal and not bring forward the existing California amendments from the 2013 California Building Code, Section 1613.5.

CHAPTER 16
STRUCTURAL DESIGN

SECTION 1613
EARTHQUAKE LOADS

~~*1613.5 [HCD 1 & HCD 2] Modifications to ASCE 7. The text of ASCE 7 shall be modified as indicated in Sections 1613.5.1 through 1613.5.2.*~~

~~*1613.5.1 [HCD 1 & HCD 2] Modify ASCE 7 DEFINITIONS as follows:*~~

~~**1.2 DEFINITIONS.**~~

~~***BALLASTED PHOTOVOLTAIC SYSTEM:** A roof mounted system composed of solar photovoltaic panels and supporting members that are unattached or partially attached to the roof and must rely on its weight, aerodynamics and friction to counter the effect of wind and seismic forces.*~~

~~*1613.5.2 [HCD 1 & HCD 2] Modify ASCE 7 Section 13.4 as follows:*~~

~~**Section 13.4 NONSTRUCTURAL COMPONENT ANCHORAGE.**~~

~~Components and their supports shall be attached (or anchored) to the structure in accordance with the requirements of this section and the attachment shall satisfy the requirements for the parent material as set forth elsewhere in this standard. Component attachments shall be bolted, welded, or otherwise positively fastened without consideration of frictional resistance produced by the effects of gravity. A continuous load path of sufficient strength and stiffness between the component and the supporting structure shall be~~

~~provided. Local elements of the structure including connections shall be designed and constructed for the component forces where they control the design of the elements or their connections. The component forces shall be those determined in Section 13.3.1, except that modifications to Fp and R, due to anchorage conditions need not be considered. The design documents shall include sufficient information relating to the attachments to verify compliance with the requirements of this section~~

~~***Exception:*** *Ballasted photovoltaic systems when design is based on Section 13.4.7 and approved by the enforcing agency.*~~

~~*13.4.7. Solar PV panels or modules installed on a roof as a balasted system need not be rigidly attached to the roof or supporting structure. Ballasted systems shall be designed and installed only on roofs with slopes 1 inch per foot or less. The ballasted system shall be designed to resist sliding and uplift resulting from lateral and vertical forces, using a coefficient of friction determined by acceptable engineering practices. In sites where the Seismic Design category is C or above, the system shall be designed to accommodate seismic displacement determined by approved analysis or shake table testing, using input motions consistent with ASCE 7 lateral and vertical seismic forces for non-structural components on roofs.*~~

NOTE:
Authority Cited: Health and Safety Code Sections 17040, 17050, 17920.9, 17921, 17921.3, 17921.6, 17921.10, 17922, 17922.6, 17922.12, 17927, 17928, 17959.6, 18300, 18552, 18554, 18620, 18630, 18640, 18670, 18690, 18691, 18865, 8871.3, 18871.4, 18873, 18873.1, 18873.2, 18873.3, 18873.4, 18873.5, 18938.3, 18944.11 and 19990; and Government Code Section 12955.1.

Reference: Health and Safety Code Sections 17000 through 17062.5, 17910 through 17995.5, 18200 through 18700, 18860 through 18874, and 19960 through 19997; and Government Code Sections 12955.1 and 12955.1.1.

---

23. HCD proposes to adopt Chapter 17 from the 2015 International Building Code into the 2016 California Building Code with new and modified existing amendments as follows:

CHAPTER 17
SPECIAL INSPECTIONS AND TESTS

SECTION 1704
SPECIAL INSPECTIONS AND TESTS, CONTRACTOR RESPONSIBILITY AND STRUCTURAL OBSERVATION

1704.2 Special inspections and tests. Where application is made to the building official for construction as specified in Sections 105 *or 1.8.4, as applicable*, the owner or the owner's authorized agent, other than the contractor, shall employ one or more approved agencies to provide special inspections and tests during construction on the types of work specified in Section 1705 and identify the approved agencies to the building official. These special inspections and tests are in addition to the inspections by the building official that are identified in Section 110.

Exceptions:

1. Special inspections and tests are not required for construction of a minor nature or as warranted by conditions in the jurisdiction as approved by the building official.
2. Unless otherwise required by the building official, special inspections and tests are not required for Group U occupancies that are accessory to a residential occupancy including, but not limited to, those listed in Section 312.1.
3. Special inspections and tests are not required for portions of structures designed and constructed in accordance with the cold-formed steel light-frame construction provisions of Section 2211.7 or the conventional light-frame construction provisions of Section 2308.
4. The contractor is permitted to employ the approved agencies where the contractor is also the owner.
~~4~~ *5. **(HCD 1)** The provisions of Health and Safety Code Division 13, Part 6 and the California Code of Regulations, Title 25, Division 1, Chapter 3, commencing with Section 3000, shall apply to the construction and inspection of factory-built housing as defined in Health and Safety Code Section 19971.*

SECTION 1707
ALTERNATIVE TEST PROCEDURE

1707.1 General. In the absence of approved rules or other approved standards, the building official shall make, or cause to be made, the necessary tests and investigations; or the building official shall accept duly authenticated reports from approved agencies in respect to the quality and manner of use of new materials or assemblies as provided for in Sections 104.11 *or 1.8.7, as applicable*. The cost of all tests and other investigations required under the provisions of this code shall be borne by the applicant.

~~*(HCD 1 & HCD 2) In the absence of approved rules or other approved standards, the building official shall make or cause to be made the necessary tests and investigations, or the building official shall accept duly authenticated reports from approved agencies with respect to the quality and manner of use of new materials or assemblies as provided for in Section 1.8.7, Chapter 1, Division 1. The cost of all tests and other investigations required under the provisions of this code shall be borne by the applicant.*~~

NOTE:
Authority Cited: Health and Safety Code Sections 17040, 17050, 17920.9, 17921, 17921.3, 17921.6, 17921.10, 17922, 17922.6, 17922.12, 17927, 17928, 17959.6, 18300, 18552, 18554, 18620, 18630, 18640, 18670, 18690, 18691, 18865, 18871.3, 18871.4, 18873, 18873.1, 18873.2, 18873.3, 18873.4, 18873.5, 18938.3, 18944.11 and 19990; and Government Code Section 12955.1.

Reference: Health and Safety Code Sections 17000 through 17062.5, 17910 through 17995.5, 18200 through 18700, 18860 through 18874, and 19960 through 19997; and Government Code Sections 12955.1 and 12955.1.1.

---

24. HCD proposes to adopt Chapter 18 from the 2015 International Building Code into the 2016 California Building Code with existing and modified existing amendments as follows:

CHAPTER 18
SOILS AND FOUNDATIONS

SECTION 1801
GENERAL

1801.2 Design basis. Allowable bearing pressures, allowable stresses and design formulas provided in this chapter shall be used with the allowable stress design load combinations specified in Section 1605.3. The quality and design of materials used structurally in excavations and foundations shall comply with the requirements specified in Chapters 16, 19, 21, 22 and 23 of this code. Excavations and fills shall also comply with Chapter 33.

(HCD 1) For limited-density owner-built rural dwellings, pier foundations, stone masonry footings and foundations, pressure-treated lumber, poles or equivalent foundation materials or designs may be used, provided that the bearing is sufficient for the purpose intended.

SECTION 1803
GEOTECHNICAL INVESTIGATIONS

1803.1 General. Geotechnical investigations shall be conducted in accordance with Section 1803.2 and reported in accordance with Section 1803.6. Where required by the building official, or where geotechnical investigations involve in-situ testing, laboratory testing or engineering calculations, such investigations shall be conducted by a registered design professional.

1803.1.1 General and where required for applications listed in Section 1.8.2.1.1 regulated by the Department of Housing and Community Development. (HCD 1) *Foundation and soils investigations shall be conducted in conformance with Health and Safety Code Sections 17953 through 17957 as summarized below.*

1803.1.1.1 Preliminary soil report. *Each city, county, or city and county shall enact an ordinance which requires a preliminary soil report, prepared by a civil engineer who is registered by the state. The report*

shall be based upon adequate test borings or excavations, of every subdivision, where a tentative and final map is required pursuant to Section 66426 of the Government Code.

The preliminary soil report may be waived if the building department of the city, county, or city and county, or other enforcement agency charged with the administration and enforcement of the provisions of Section 1803.1.1, shall determine that, due to the knowledge such department has as to the soil qualities of the soil of the subdivision or lot, no preliminary analysis is necessary.

1803.1.1.2 Soil investigation by lot, necessity, preparation, and recommendations. *If the preliminary soil report indicates the presence of critically expansive soils or other soil problems which, if not corrected, would lead to structural defects, such ordinance shall require a soil investigation of each lot in the subdivision.*

The soil investigation shall be prepared by a civil engineer who is registered in this state. It shall recommend corrective action which is likely to prevent structural damage to each dwelling proposed to be constructed on the expansive soil.

1803.1.1.3 Approval, building permit conditions, appeal. *The building department of each city, county, or city and county, or other enforcement agency charged with the administration and enforcement of the provisions of Section 1803.1.1, shall approve the soil investigation if it determines that the recommended action is likely to prevent structural damage to each dwelling to be constructed. As a condition to the building permit, the ordinance shall require that the approved recommended action be incorporated in the construction of each dwelling. Appeal from such determination shall be to the local appeals board.*

1803.1.1.4 Liability. *A city, county, city and county, or other enforcement agency charged with the administration and enforcement of the provisions of Section 1803.1.1, is not liable for any injury which arises out of any act or omission of the city, county, city and county, other enforcement agency, or a public employee or any other person under Section 1803.1.1.*

1803.1.1.5. Alternate procedures. *The governing body of any city, county, or city and county may enact an ordinance prescribing an alternate procedure which is equal to or more restrictive than the procedure specified in Section 1803.1.1.*

SECTION 1804
EXCAVATION, GRADING AND FILL

1804.4 (Formerly 1804.3) Site grading. The ground immediately adjacent to the foundation shall be sloped away from the building at a slope of not less than one unit vertical in 20 units horizontal (5-percent slope) for a minimum distance of 10 feet (3048 mm) measured perpendicular to the face of the wall. If physical obstructions or lot lines prohibit 10 feet (3048 mm) of horizontal distance, a 5-percent slope shall be provided to an approved alternative method of diverting water away from the foundation. Swales used for this purpose shall be sloped a minimum of 2 percent where located within 10 feet (3048 mm) of the building foundation. Impervious surfaces within 10 feet (3048 mm) of the building foundation shall be sloped a minimum of 2 percent away from the building.

Exception: Where climatic or soil conditions warrant, the slope of the ground away from the building foundation shall be permitted to be reduced to not less than one unit vertical in 48 units horizontal (2-percent slope).

The procedure used to establish the final ground level adjacent to the foundation shall account for additional settlement of the backfill.

~~1804.3.1~~ 1804.4.1 (HCD 1) Construction plans. *Construction plans shall indicate how the site grading or drainage system will manage all surface water flows to keep water from entering buildings in accordance with the California Green Building Standards Code (CALGreen), Chapter 4, Division 4.1.*

SECTION 1805
DAMPPROOFING AND WATERPROOFING

1805.4 Subsoil drainage system. Where a hydrostatic pressure condition does not exist, dampproofing shall be provided and a base shall be installed under the floor and a drain installed around the foundation perimeter. A subsoil drainage system designed and constructed in accordance with Section 1805.1.3 shall be deemed adequate for lowering the groundwater table.

1805.4.1 Floor base course. Floors of basements, except as provided for in Section 1805.1.1, shall be placed over a floor base course not less than 4 inches (102 mm) in thickness that consists of gravel or crushed stone containing not more than 10 percent of material that passes through a No. 4 (4.75 mm) sieve.

Exceptions:

1. Where a site is located in well-drained gravel or sand/gravel mixture soils, a floor base course is not required.
2. ***(HCD1)*** *When a capillary break is installed in accordance with the California Green Building Standards Code (CALGreen), Chapter 4, Division 4.5*

1805.4.3 Drainage discharge. The floor base and foundation perimeter drain shall discharge by gravity or mechanical means into an approved drainage system that complies with the ~~International~~ *California* Plumbing Code.

Exception: Where a site is located in well-drained gravel or sand/gravel mixture soils, a dedicated drainage system is not required.

SECTION 1810
DEEP FOUNDATIONS

1810.3.10.4 Seismic reinforcement. For structures assigned to Seismic Design Category C, a permanent steel casing shall be provided from the top of the micropile down to the point of zero curvature. For structures assigned to Seismic Design Category D, E or F, the micropile shall be considered as an alternative system in accordance with Sections 104.11 *or 1.8.7, as applicable*. The alternative system design, supporting documentation and test data shall be submitted to the building official for review and approval.

~~*(HCD 1 & HCD 2) For structures assigned to Seismic Design Category D, E or F, the micropile shall be considered as an alternative system in accordance with Section 1.8.7, Chapter 1, Division 1. The alternative system design, supporting documentation and test data shall be submitted to the building official for review and approval.*~~

NOTE:
Authority Cited: Health and Safety Code Sections 17040, 17050, 17920.9, 17921, 17921.3, 17921.6, 17921.10, 17922, 17922.6, 17922.12, 17927, 17928, 17959.6, 18300, 18552, 18554, 18620, 18630, 18640, 18670, 18690, 18691, 18865, 18871.3, 18871.4, 18873, 18873.1, 18873.2, 18873.3, 18873.4, 18873.5, 18938.3, 18944.11, and 19990; and Government Code Section 12955.1.

Reference: Health and Safety Code Sections 17000 through 17062.5, 17910 through 17995.5, 18200 through 18700, 18860 through 18874, and 19960 through 19997; and Government Code Sections 12955.1 and 12955.1.1.

---

25. HCD proposes to adopt Chapter 19 from the 2015 International Building Code into the 2016 California Building Code with existing amendments as follows:

CHAPTER 19
CONCRETE

SECTION 1905
MODIFICATIONS TO ACI 318

1905.1.2 ACI 318, Section 18.2.1.2 (Formerly 21.1.1). Modify ACI 318 Sections 18.2.1.2 and 18.2.1.6 to read as follows:

18.2.1.2 – Structures assigned to Seismic Design Category A shall satisfy requirements of Chapters 1 through 17 and 19 through 26. Chapter 18 does not apply. Structures assigned to Seismic Design Category B, C, D, E or F also shall satisfy 18.2.1.3 through 18.2.1.7, as applicable. Except for structural elements of plain concrete complying with Section 1905.1.7 of the ~~International~~ *California* Building Code, structural elements of plain concrete are prohibited in structures assigned to Seismic Design Category C, D, E or F.

18.2.1.6.... (No change to text)

1905.1.5 (Formerly 1905.1.6) ACI 318, Section 18.13.1.1 (Formerly 21.12.1.1). Modify ACI 318, Section 18.13.1.1 to read as follows:

18.13.1.1 – Foundations resisting earthquake-induced forces or transferring earthquake-induced forces between a structure and ground shall comply with the requirements of 18.13 and other applicable provisions of ACI 318 unless modified by Chapter 18 of the ~~International~~ *California* Building Code.

SECTION 1907
MINIMUM SLAB PROVISIONS

1907.1 General. The thickness of concrete floor slabs supported directly on the ground shall not be less than 3 1/2 inches (89 mm). A 6-mil (0.006 inch; 0.15 mm) polyethylene vapor retarder with joints lapped not less than 6 inches (152 mm) shall be placed between the base course or subgrade and the concrete floor slab, or other approved equivalent methods or materials shall be used to retard vapor transmission through the floor slab.

Exceptions: A vapor retarder is not required:

1. For detached structures accessory to occupancies in Group R-3, such as garages, utility buildings or other unheated facilities.
2. For unheated storage rooms having an area of less than 70 square feet (6.5 m2) and carports attached to occupancies in Group R-3.
3. For buildings of other occupancies where migration of moisture through the slab from below will not be detrimental to the intended occupancy of the building.
4. For driveways, walks, patios and other flatwork which will not be enclosed at a later date.
5. Where *approved* based on local site conditions.

1907.1.1 (HCD 1) Capillary break. *When a vapor retarder is required, a capillary break shall be installed in accordance with the California Green Building Standards Code (CALGreen), Chapter 4, Division 4.5.*

NOTE:
Authority Cited: Health and Safety Code Sections 17040, 17050, 17920.9, 17921, 17921.3, 17921.6, 17921.10, 17922, 17922.6, 17922.12, 17927, 17928, 17959.6, 18300, 18552, 18554, 18620, 18630, 18640, 18670, 18690, 18691, 18865, 18871.3, 18871.4, 18873, 18873.1, 18873.2, 18873.3, 18873.4, 18873.5, 18938.3, 18944.11, and 19990; and Government Code Section 12955.1.

Reference: Health and Safety Code Sections 17000 through 17062.5, 17910 through 17995.5, 18200 through 18700, 18860 through 18874, and 19960 through 19997; and Government Code Sections 12955.1 and 12955.1.1.

---

26. HCD proposes to repeal and not bring forward the existing California amendments from the 2013 California Building Code, Section 1905.1.9.

CHAPTER 19
CONCRETE

SECTION 1905
MODIFICATIONS TO ACI 318

~~***1905.1.9 ACI 318, Section D.3.3.*** *Modify ACI 318, Sections D.3.3.4.2, D.3.3.4.3(d) and D.3.3.5.2 to read as follows:*~~

~~*D.3.3.4.2 – Where the tensile component of the strength-level earthquake force applied to anchors exceeds 20 percent of the total factored anchor tensile force associated with the same load combination, anchors and their attachments shall be designed in accordance with Section D.3.3.4.3. The anchor design tensile strength shall be determined in accordance with Section D.3.3.4.4.*~~

~~**Exception:** Anchors designed to resist wall out-of-plane forces with design strengths equal to or greater than the force determined in accordance with ASCE 7 Equation 12.11-1 or 12.14-10 and Section 1604A.8.2 of this code shall be deemed to satisfy Section D.3.3.4.3(d).~~

~~D.3.3.4.3(d) – The anchor or group of anchors shall be designed for the maximum tension obtained from design load combinations that include E, with E increased by Ω_0. The anchor design tensile strength shall be calculated from Section D.3.3.4.4~~

~~D.3.3.5.2 – Where the shear component of the strength-level earthquake force applied to anchors exceeds 20 percent of the total factored anchor shear force associated with the same load combination, anchors and their attachments shall be designed in accordance with Section D.3.3.5.3. The anchor design shear strength for resisting earthquake forces shall be determined in accordance with Section D.6.~~

~~**Exceptions:**~~

~~1. For the calculation of the in-plane shear strength of anchor bolts attaching wood sill plates of bearing or non-bearing walls of light-frame wood structures to foundations or foundation stem walls, the in-plane design shear strength in accordance with Sections D.6.2 and D.6.3 need not be computed and Section D.3.3.5.3 shall be deemed to be satisfied provided all of the following are met:~~

~~1.1. The allowable in-plane shear strength of the anchor is determined in accordance with AF&PA NDS Table 11E for lateral design values parallel to grain.~~

~~1.2. The maximum anchor nominal diameter is $^5/_8$ inches (16 mm).~~

~~1.3. Anchor bolts are embedded into concrete a minimum of 7 inches (178 mm).~~

~~1.4. Anchor bolts are located a minimum of $1\,^3/_4$ inches (45 mm) from the edge of the concrete parallel to the length of the wood sill plate.~~

~~1.5. Anchor bolts are located a minimum of 15 anchor diameters from the edge of the concrete perpendicular to the length of the wood sill plate.~~

~~1.6. The sill plate is 2-inch or 3-inch nominal thickness.~~

~~2. For the calculation of the in-plane shear strength of anchor bolts attaching cold-formed steel track of bearing or non-bearing walls of anchor bolts attaching cold-formed steel track of bearing or non-bearing walls of light-frame construction to foundations or foundation stem walls the in-plane design shear strength in accordance with Sections D.6.2 and D.6.3 need not be computed and Section D.3.3.5.3 shall be deemed to be satisfied provided all of the following are met:~~

~~2.1. The maximum anchor nominal diameter is $^5/_8$ inches (16 mm).~~

~~2.2. Anchors are embedded into concrete a minimum of 7 inches (178 mm).~~

~~2.3. Anchors are located a minimum of $1\,^3/_4$ inches (45 mm) from the edge of the concrete parallel to the length of the track.~~

~~2.4. Anchors are located a minimum of 15 anchor diameters from the edge of the concrete perpendicular to the length of the track.~~

~~2.5. The track is 33 to 68 mil designation thickness.~~

~~Allowable in-plane shear strength of exempt anchors, parallel to the edge of concrete shall be permitted to be determined in accordance with AISI S100 Section E3.3.1.~~

~~3. In light frame construction, bearing or nonbearing walls, shear strength of concrete anchors less than or equal to 5/8 inch [16mm] in diameter of sill plate or track to foundation or foundation stem wall need not satisfy Section D.3.3.5.3 (a) through (c) when the design strength of the anchors is determined in accordance with Section D.6.2.1(c).~~

27. HCD proposes to adopt Chapter 20 from the 2015 International Building Code into the 2016 California Building Code without amendments:

CHAPTER 20
ALUMINUM

NOTE:
Authority Cited: Health and Safety Code Sections 17040, 17050, 17920.9, 17921, 17921.3, 17921.6, 17921.10, 17922, 17922.6, 17922.12, 17927, 17928, 17959.6, 18300, 18552, 18554, 18620, 18630, 18640, 18670, 18690, 18691, 18865, 18871.3, 18871.4, 18873, 18873.1, 18873.2, 18873.3, 18873.4, 18873.5, 18938.3, 18944.11 and 19990; and Government Code Section 12955.1.

Reference: Health and Safety Code Sections 17000 through 17062.5, 17910 through 17995.5, 18200 through 18700, 18860 through 18874, and 19960 through 19997; and Government Code Sections 12955.1 and 12955.1.1.

28. HCD proposes to adopt Chapter 21 from the 2015 International Building Code into the 2016 California Building Code with existing amendments as follows:

CHAPTER 21
MASONRY

SECTION 2109
EMPIRICAL DESIGN OF MASONRY

2109.1.1 Limitations. The use of empirical design of masonry shall be limited as noted in Section 5.1.2 of TMS 402/ACI 530/ASCE 5. The use of dry-stacked, surface bonded masonry shall be prohibited in Risk Category IV structures. In buildings that exceed one or more of the limitations of Section 5.1.2 of TMS 402/ACI 530/ASCE 5, masonry shall be designed in accordance with the engineered design provisions of Section 2101.2.1, 2101.2.2 or 2101.2.3 or the foundation wall provisions of Section 1807.1.5.

Section A.1.2.2 of TMS 402/ACI 530/ASCE 5 shall be modified as follows:

A.1.2.2 (Formerly 5.1.2.2) Wind – Empirical requirements shall not apply to the design or construction of masonry for buildings, parts of buildings, or other structures to be located in areas where V_{asd} as determined in accordance with Section 1609.3.1 of the ~~International~~ *California* Building Code exceeds 110 mph.

SECTION 2113
MASONRY CHIMNEYS

2113.11.1.2 Gas appliances. Flue lining systems for gas appliances shall be in accordance with the ~~International Fuel Gas~~ *California Mechanical* Code.

2113.15 Flue area (appliance). Chimney flues shall not be smaller in area than the area of the connector from the appliance. Chimney flues connected to more than one appliance shall not be less than the area of the largest connector plus 50 percent of the areas of additional chimney connectors.

Exceptions:

1. Chimney flues serving oil-fired appliances sized in accordance with NFPA 31.
2. Chimney flues serving gas-fired appliances sized in accordance with the ~~International Fuel Gas~~ *California Mechanical* Code.

NOTE:
Authority Cited: Health and Safety Code Sections 17040, 17050, 17920.9, 17921, 17921.3, 17921.6, 17921.10,

17922, 17922.6, 17922.12, 17927, 17928, 17959.6, 18300, 18552, 18554, 18620, 18630, 18640, 18670, 18690, 18691, 18865, 18871.3, 18871.4, 18873, 18873.1, 18873.2, 18873.3, 18873.4, 18873.5, 18938.3, 18944.11 and 19990; and Government Code Section 12955.1.

Reference: Health and Safety Code Sections 17000 through 17062.5, Sections 17910 through 17995.5, Sections 18200 through 18700, Sections 18860 through 18874, and Sections 19960 through 19997; and Government Code Sections 12955.1 and 12955.1.1.

29. HCD proposes to adopt Chapter 22 from the 2015 International Building Code into the 2016 California Building Code without amendments:

CHAPTER 22
STEEL

NOTE:
Authority Cited: Health and Safety Code Sections 17040, 17050, 17920.9, 17921, 17921.3, 17921.6, 17921.10, 17922, 17922.6, 17922.12, 17927, 17928, 17959.6, 18300, 18552, 18554, 18620, 18630, 18640, 18670, 18690, 18691, 18865, 18871.3, 18871.4, 18873, 18873.1, 18873.2, 18873.3, 18873.4, 18873.5, 18938.3, 18944.11 and 19990; and Government Code Section 12955.1.

Reference: Health and Safety Code Sections 17000 through 17062.5, 17910 through 17995.5, 18200 through 18700, 18860 through 18874, and 19960 through 19997; and Government Code Sections 12955.1 and 12955.1.1.

30. HCD proposes to adopt Chapter 23 from the 2015 International Building Code into the 2016 California Building Code with existing amendments as follows:

CHAPTER 23
WOOD

SECTION 2301
GENERAL

2301.1 Scope. The provisions of this chapter shall govern the materials, design, construction and quality of wood members and their fasteners.

(HCD 1) *For limited-density owner-built rural dwellings, owner-produced or used materials and appliances may be utilized unless found not to be of sufficient strength or durability to perform the intended function; owner-produced or used lumber, or shakes and shingles may be utilized unless found to contain dry rot, excessive splitting or other defects obviously rendering the material unfit in strength or durability for the intended purpose.*

SECTION 2304
GENERAL CONSTRUCTION REQUIREMENTS

2304.3.1 Bottom plates. Studs shall have full bearing on a 2-inch-thick (actual 11/2-inch, 38 mm) or larger plate or sill having a width at least equal to the width of the studs.

2304.3.1.1 (HCD 1) Rodent proofing. *Annular spaces around pipes, electric cables, conduits or other openings in bottom/sole plates at exterior walls shall be protected against the passage of rodents by closing such openings in accordance with the California Green Building Standards Code (CALGreen), Chapter 4, Division 4.4.*

2304.5 Framing around flues and chimneys. Combustible framing shall be a minimum of 2 inches (51 mm), but shall not be less than the distance specified in Sections 2111 and 2113 and the ~~International~~ *California* Mechanical Code, from flues, chimneys and fireplaces, and 6 inches (152 mm) away from flue openings.

SECTION 2308
CONVENTIONAL LIGHT-FRAME CONSTRUCTION

2308.1 General. The requirements of this section are intended for conventional light-frame construction. Other construction methods are permitted to be used, provided a satisfactory design is submitted showing compliance with other provisions of this code. Interior nonload-bearing partitions, ceilings and curtain walls of conventional light-frame construction are not subject to the limitations of Section 2308.3. ~~Detached one- and two-family dwellings and multiple single-family dwellings (townhouses) not more than three stories above grade plane in height with a separate means of egress and their accessory structures shall comply with the International Residential Code.~~

NOTE:
Authority Cited: Health and Safety Code Sections 17040, 17050, 17920.9, 17921, 17921.3, 17921.6, 17921.10, 17922, 17922.6, 17922.12, 17927, 17928, 17959.6, 18300, 18552, 18554, 18620, 18630, 18640, 18670, 18690, 18691, 18865, 18871.3, 18871.4, 18873, 18873.1, 18873.2, 18873.3, 18873.4, 18873.5, 18938.3, 18944.11 and 19990; and Government Code Section 12955.1.

Reference: Health and Safety Code Sections 17000 through 17062.5, 17910 through 17995.5, 18200 through 18700, 18860 through 18874, and 19960 through 19997; and Government Code Sections 12955.1 and 12955.1.1.

---

31. HCD proposes to adopt Chapter 24 from the 2015 International Building Code into the 2016 California Building Code without amendments:

CHAPTER 24
GLASS AND GLAZING

NOTE:
Authority Cited: Health and Safety Code Sections 17040, 17050, 17920.9, 17921, 17921.3, 17921.6, 17921.10, 17922, 17922.6, 17922.12, 17927, 17928, 17959.6, 18300, 18552, 18554, 18620, 18630, 18640, 18670, 18690, 18691, 18865, 18871.3, 18871.4, 18873, 18873.1, 18873.2, 18873.3, 18873.4, 18873.5, 18938.3, 18944.11 and 19990; and Government Code Section 12955.1.

Reference: Health and Safety Code Sections 17000 through 17062.5, 17910 through 17995.5, 18200 through 18700, 18860 through 18874, and 19960 through 19997; and Government Code Sections 12955.1 and 12955.1.1.

---

32. HCD proposes to adopt Chapter 25 from the 2015 International Building Code into the 2016 California Building Code without amendments:

CHAPTER 25
GYPSUM BOARD AND PLASTER

NOTE:
Authority Cited: Health and Safety Code Sections 17040, 17050, 17920.9, 17921, 17921.3, 17921.6, 17921.10, 17922, 17922.6, 17922.12, 17927, 17928, 17959.6, 18300, 18552, 18554, 18620, 18630, 18640, 18670, 18690, 18691, 18865, 18871.3, 18871.4, 18873, 18873.1, 18873.2, 18873.3, 18873.4, 18873.5, 18938.3, 18944.11 and 19990; and Government Code Section 12955.1.

Reference: Health and Safety Code Sections 17000 through 17062.5, 17910 through 17995.5, 18200 through 18700, 18860 through 18874, and 19960 through 19997; and Government Code Sections 12955.1 and 12955.1.1.

---

33. HCD proposes to adopt Chapter 26 from the 2015 International Building Code into the 2016 California Building Code without amendments:

CHAPTER 26
PLASTIC

NOTE:
Authority Cited: Health and Safety Code Sections 17040, 17050, 17920.9, 17921, 17921.3, 17921.6, 17921.10, 17922, 17922.6, 17922.12, 17927, 17928, 17959.6, 18300, 18552, 18554, 18620, 18630, 18640, 18670, 18690, 18691, 18865, 18871.3, 18871.4, 18873, 18873.1, 18873.2, 18873.3, 18873.4, 18873.5, 18938.3, 18944.11 and 19990; and Government Code Section 12955.1.

Reference: Health and Safety Code Sections 17000 through 17062.5, 17910 through 17995.5, 18200 through 18700, 18860 through 18874, and 19960 through 19997; and Government Code Sections 12955.1 and 12955.1.1.

---

34. HCD proposes NOT to adopt Chapter 27 from the 2015 International Building Code.

CHAPTER 27
ELECTRICAL

NOTE:
Authority Cited: Health and Safety Code Sections 17040, 17050, 17920.9, 17921, 17921.3, 17921.6, 17921.10, 17922, 17922.6, 17922.12, 17927, 17928, 17959.6, 18300, 18552, 18554, 18620, 18630, 18640, 18670, 18690, 18691, 18865, 18871.3, 18871.4, 18873, 18873.1, 18873.2, 18873.3, 18873.4, 18873.5, 18938.3, 18944.11 and 19990; and Government Code Section 12955.1.

Reference: Health and Safety Code Sections 17000 through 17062.5, 17910 through 17995.5, 18200 through 18700, 18860 through 18874, and 19960 through 19997; and Government Code Sections 12955.1 and 12955.1.1.

---

35. HCD proposes NOT to adopt Chapter 28 from the 2015 International Building Code.

CHAPTER 28
MECHANICAL SYSTEMS

NOTE:
Authority Cited: Health and Safety Code Sections 17040, 17050, 17920.9, 17921, 17921.3, 17921.6, 17921.10, 17922, 17922.6, 17922.12, 17927, 17928, 17959.6, 18300, 18552, 18554, 18620, 18630, 18640, 18670, 18690, 18691, 18865, 18871.3, 18871.4, 18873, 18873.1, 18873.2, 18873.3, 18873.4, 18873.5, 18938.3, 18944.11 and 19990; and Government Code Section 12955.1.

Reference: Health and Safety Code Sections 17000 through 17062.5, 17910 through 17995.5, 18200 through 18700, 18860 through 18874, and 19960 through 19997; and Government Code Sections 12955.1 and 12955.1.1.

---

36. HCD proposes NOT to adopt Chapter 29 from the 2015 International Building Code.

CHAPTER 29
PLUMBING SYSTEMS

NOTE:
Authority Cited: Health and Safety Code Sections 17040, 17050, 17920.9, 17921, 17921.3, 17921.6, 17921.10, 17922, 17922.6, 17922.12, 17927, 17928, 17959.6, 18300, 18552, 18554, 18620, 18630, 18640, 18670, 18690, 18691, 18865, 18871.3, 18871.4, 18873, 18873.1, 18873.2, 18873.3, 18873.4, 18873.5, 18938.3, 18944.11 and 19990; and Government Code Section 12955.1.

Reference: Health and Safety Code Sections 17000 through 17062.5, 17910 through 17995.5, 18200 through 18700, 18860 through 18874, and 19960 through 19997; and Government Code Sections 12955.1 and 12955.1.1.

---

37. HCD proposes to adopt Chapter 30, Sections 3001.1 and 3001.3 only, from the 2015 International Building Code into the 2016 California Building Code with existing amendment as follows:

CHAPTER 30
ELEVATORS AND CONVEYING SYSTEMS

SECTION 3001
GENERAL

3001.3 Accessibility. Passenger elevators *and platform (wheelchair) lifts* required to be accessible or to serve as part of an accessible means of egress shall comply with Sections 1009 and ~~1109.7~~ *Chapter 11A for applications listed in Section 1.8.2.1.2 regulated by the Department of Housing and Community Development.*

NOTE:
Authority Cited: Health and Safety Code Sections 17040, 17050, 17920.9, 17921, 17921.3, 17921.6, 17921.10, 17922, 17922.6, 17922.12, 17927, 17928, 17959.6, 18300, 18552, 18554, 18620, 18630, 18640, 18670, 18690, 18691, 18865, 18871.3, 18871.4, 18873, 18873.1, 18873.2, 18873.3, 18873.4, 18873.5, 18938.3, 18944.11 and 19990; and Government Code Section 12955.1.

Reference: Health and Safety Code Sections 17000 through 17062.5, 17910 through 17995.5, 18200 through 18700, 18860 through 18874, and 19960 through 19997; and Government Code Sections 12955.1 and 12955.1.1.

---

38. HCD proposes to adopt Chapter 31, except Section 3109, from the 2015 International Building Code into the 2016 California Building Code with existing amendment as follows:

CHAPTER 31
SPECIAL CONSTRUCTION

SECTION 3104
PEDESTRIAN WALKWAYS AND TUNNELS

3104.2 Separate structures. Buildings connected by pedestrian walkways or tunnels shall be considered to be separate structures.
Exceptions:

1. Buildings that are on the same lot and considered as portions of a single building in accordance with Section 503.1.2.

2. *(HCD 1-AC)* For purposes of *accessibility* ~~calculating the number of Type B units required by Chapter 11~~ *as required by Chapter 11A*, structurally connected buildings, *buildings connected by stairs, walkways, or roofs,* and buildings with multiple wings shall be considered one structure.

NOTE:
Authority Cited: Health and Safety Code Sections 17040, 17050, 17920.9, 17921, 17921.3, 17921.6, 17921.10, 17922, 17922.6, 17922.12, 17927, 17928, 17959.6, 18300, 18552, 18554, 18620, 18630, 18640, 18670, 18690, 18691, 18865, 18871.3, 18871.4, 18873, 18873.1, 18873.2, 18873.3, 18873.4, 18873.5, 18938.3, 18944.11 and 19990; and Government Code Section 12955.1.

Reference: Health and Safety Code Sections 17000 through 17062.5, 17910 through 17995.5, 18200 through 18700, 18860 through 18874, and 19960 through 19997; and Government Code Sections 12955.1 and 12955.1.1.

---

39. HCD proposes to adopt Chapter 32 from the 2015 International Building Code into the 2016 California Building Code without amendments:

CHAPTER 32
ENCROACHMENTS INTO THE PUBLIC RIGHT-OF-WAY

NOTE:
Authority Cited: Health and Safety Code Sections 17040, 17050, 17920.9, 17921, 17921.3, 17921.6, 17921.10, 17922, 17922.6, 17922.12, 17927, 17928, 17959.6, 18300, 18552, 18554, 18620, 18630, 18640, 18670, 18690, 18691, 18865, 18871.3, 18871.4, 18873, 18873.1, 18873.2, 18873.3, 18873.4, 18873.5, 18938.3, 18944.11 and 19990; and Government Code Section 12955.1.

Reference: Health and Safety Code Sections 17000 through 17062.5, 17910 through 17995.5, 18200 through 18700, 18860 through 18874, and 19960 through 19997; and Government Code Sections 12955.1 and 12955.1.1.

---

40. HCD proposes to adopt Chapter 33, Sections 3301, 3302, 3303, 3304, 3305, 3306, 3307, and 3308, from the 2015 International Building Code into the 2016 California Building Code with existing amendments as follows. HCD proposes to not adopt Sections 3309, 3310, 3311, 3312 and 3313.

CHAPTER 33
SAFEGUARDS DURING CONSTRUCTION

SECTION 3304
SITE WORK

3304.1.5 (HCD 1) Storm water drainage and retention during construction. *Projects which disturb less than one acre of soil and are not part of a larger common plan of development which in total disturbs one acre or more, shall manage storm water drainage during construction in accordance with the California Green Building Standards Code (CALGreen), Chapter 4, Division 4.1.*

SECTION 3305
SANITARY

3305.1 Facilities required. Sanitary facilities shall be provided during construction, remodeling or demolition activities in accordance with the ~~*International*~~ *California* Plumbing Code.

SECTION 3306
PROTECTION OF PEDESTRIANS

3306.2 Walkways. A walkway shall be provided for pedestrian travel in front of every construction and demolition site unless the applicable governing authority authorizes the sidewalk to be fenced or closed. Walkways shall be of sufficient width to accommodate the pedestrian traffic, but in no case shall they be less than 4 feet (1219 mm) in width. Walkways shall be provided with a durable walking surface. Walkways shall be accessible in accordance with ~~Chapter 11~~ *Chapter 11A* and shall be designed to support all imposed loads and in no case shall the design live load be less than 150 pounds per square foot (psf) (7.2 kN/m^2).

NOTE:
Authority Cited: Health and Safety Code Sections 17040, 17050, 17920.9, 17921, 17921.3, 17921.6, 17921.10, 17922, 17922.6, 17922.12, 17927, 17928, 17959.6, 18300, 18552, 18554, 18620, 18630, 18640, 18670, 18690, 18691, 18865, 18871.3, 18871.4, 18873, 18873.1, 18873.2, 18873.3, 18873.4, 18873.5, 18938.3, 18944.11 and 19990; and Government Code Section 12955.1.

Reference: Health and Safety Code Sections 17000 through 17062.5, 17910 through 17995.5, 18200 through 18700, 18860 through 18874, and 19960 through 19997; and Government Code Sections 12955.1 and 12955.1.1.

---

41. HCD proposes NOT to adopt Chapter 34 from the 2015 International Building Code.

CHAPTER 34
RESERVED

NOTE:
Authority Cited: Health and Safety Code Sections 17040, 17050, 17920.9, 17921, 17921.3, 17921.6, 17921.10, 17922, 17922.6, 17922.12, 17927, 17928, 17959.6, 18300, 18552, 18554, 18620, 18630, 18640, 18670, 18690, 18691, 18865, 18871.3, 18871.4, 18873, 18873.1, 18873.2, 18873.3, 18873.4, 18873.5, 18938.3, 18944.11 and 19990; and Government Code Section 12955.1.

Reference: Health and Safety Code Sections 17000 through 17062.5, 17910 through 17995.5, 18200 through 18700, 18860 through 18874, and 19960 through 19997; and Government Code Sections 12955.1 and 12955.1.1.

---

42. HCD proposes to repeal and not bring forward the existing California amendments from the 2013 California Building Code, Chapter 34 into the 2016 California Building Code.

CHAPTER 34
EXISTING STRUCTURES

SECTION 3401
GENERAL

3401.1 Scope. The provisions of this chapter shall control the alteration, repair, addition and change of occupancy of existing buildings and structures.

~~*[HCD 1] In addition to the requirements in this chapter, maintenance, alteration, repair, addition, or change of occupancy to existing buildings and accessory structures under the authority of the Department of Housing and Community Development, as provided in Section 1.8.2.1.1, shall comply with California Code of Regulations, Title 25, Division 1, Chapter 1, Subchapter 1.*~~

Exceptions:
1. Existing bleachers, grandstands and folding and telescopic seating shall comply with ICC 300-02.
2. ~~*[HCD 2] For moved buildings and maintenance, alteration, repair, addition, or change of occupancy to existing*~~

~~*buildings and accessory structures in mobilehome parks or special occupancy parks as provided in Section 1.8.2.1.3. See California Code of Regulations, Title 25, Division 1, Chapters 2 and 2.2.*~~
~~3. *[HCD 1] Limited-density owner-built rural dwellings.*~~

3401.4.1 Existing materials. Materials already in use in a building in compliance with requirements or approvals in effect at the time of their erection or installation shall be permitted to remain in use unless determined by the building code official to be unsafe per Section 116.

~~*[HCD 1] Local ordinances or regulations shall permit the replacement, retention and extension of original materials, and the use of original methods of construction, for any building or accessory structure, provided such building or structure complied with the building code provisions in effect at the time of original construction and the building or accessory structure does not become or continue to be a substandard building. For additional information, see Health and Safety Code Sections 17912, 17920.3, 17922(d), 17922.3, 17958.8 and 17958.9.*~~

SECTION 3404
ALTERATIONS

3404.1 General. Except as provided by Section 3401.4 or this section, alterations to any building or structure shall comply with the requirements of the code for new construction. Alterations shall be such that the existing building or structure is no less complying with the provisions of this code than the existing building or structure was prior to the alteration.

Exceptions: (No change to text)

~~***3404.1.1 Replacement, retention and extension of original materials. [HCD 1]*** *Local ordinances or regulations shall permit the replacement, retention and extension of original materials, and the use of original methods of construction, for any building or accessory structure, provided such building or structure complied with the building code provisions in effect at the time of original construction and the building or accessory structure does not become or continue to be a substandard building. For additional information, see Health and Safety Code Sections 17912, 17920.3, 17922(d), 17922.3, 17958.8 and 17958.9.*~~

SECTION 3405
REPAIRS

3405.1 General. Buildings and structures, and parts thereof, shall be repaired in compliance with Section 3405 and 3401.2. Work on nondamaged components that is necessary for the required repair of damaged components shall be considered part of the repair and shall not be subject to the requirements for alterations in this chapter. Routine maintenance required by Section 3401.2, ordinary repairs exempt from permit in accordance with Section 105.2, and abatement of wear due to normal service conditions shall not be subject to the requirements for repairs in this section.

~~***3405.1.2 Replacement, retention and extension of original materials. [HCD 1]*** *Local ordinances or regulations shall permit the replacement, retention and extension of original materials, and the use of original methods of construction, for any building or accessory structure, provided such building or structure complied with the building code provisions in effect at the time of original construction and the building or accessory structure does not become or continue to be a substandard building. For additional information, see Health and Safety Code Sections 17912, 17920.3, 17922(d), 17922.3, 17958.8 and 17958.9.*~~

SECTION 3410
MOVED STRUCTURES

3410.1 Conformance. Structures moved into or within the jurisdiction shall comply with the provisions of this code for new structures.

~~***Exception: [HCD 1 & HCD 2]*** *After July 1, 1978, local ordinances or regulations for moved apartment houses and dwellings shall permit the retention of existing materials and methods of construction, provided the apartment house or dwelling complies with the building standards for foundations applicable to new construction and does not become or continue to be a substandard building. For additional information, see Health and Safety Code Section 17958.9.*~~

43. HCD proposes to adopt Chapter 35 from the 2015 International Building Code into the 2016 California Building Code with new and existing amendments as follows:

CHAPTER 35
REFERENCED STANDARDS

This chapter lists the standards that are referenced in various sections of this document. The standards are listed herein by the promulgating agency of the standard, the standard identification, the effective date and title, and the section or sections of this document that reference the standard. The application of the referenced standards shall be as specified in *Chapter 1, Scope and Administration, Division I, Sections 1.1.5 and 1.1.7, and in Chapter 1, Scope and Administration, Division II,* Section 102.4, *as applicable*.

ASTM	American Society for Testing and Materials 100 Barr Harbor Drive West Conshohocken, PA 19428-2959	
Standard Reference number	**Title**	**Referenced in code section number**
A227 – 06 (2011)	*Standard Specification for Steel Wire, Cold-Drawn for Mechanical Springs*	*1211.1.1*
A229 - 12	*Standard Specification for Steel Wire, Quenched and Tempered for Mechanical Springs*	*1211.1.1*
ICC	International Code Council 500 New Jersey Avenue, NW 6th Floor Washington, DC 20001	
Standard Reference Number	Title	Referenced in code section number
~~ICC/ANSI A117.1—09~~	~~Accessible and Usable Buildings and Facilities~~	~~202, 907.5.2.3.3, 1009.8.2, 1009.9, 1009.11, 1010.1.9.7, 1012.1, 1012.6.5, 1012.10, 1013.4, 1023.9, 1101.2, 1111.2, 1111.3, 1111.4, 1111.4.2~~
ICC 300-12	ICC Standard on Bleachers, Folding and Telescopic Seating and Grandstands	1029.1.1, Table 1607.1
ICC 400-12	Standard on Design and Construction of Log Structures	2301.2
ICC 500—14	ICC/NSSA Standard on the Design and Construction of Storm Shelters	202, 423.1, 423.3, 423.4
ICC 600-14	Standard for Residential Construction in High Wind Regions	1609.1.1, 1609.1.1.1, 2308.2.1
~~IEBC—15~~	~~International Existing Building Code~~	~~101.4.7, 116.5, 201.3~~
~~IECC-15~~	~~International Energy Conservation Code®~~	~~101.4.6, 201.3, 202, 1203.1, 1301.1.1, 1405.3~~
~~IFC-15~~	~~International Fire Code®~~	~~101.4.5, 102.6, 201.3, 202, 307.1, Table 307.1(1), Table 307.1(2), 307.1.1, 307.1.2, 403.4.5, 404.2, 406.7, 406.8, 407.2.6, 407.4, 410.3.6, 411.1, 412.1, 412.6.1, 413.1, 414.1.1, 414.1.2, 414.1.2.1, 414.2, 414.2.5, Table 414.2.5(1), Table 414.2.5(2), 414.3, 414.5, 414.5.1, Table 414.5.1, 414.5.2, 414.5.3, 414.5.4, 414.6, 415.1,~~

		~~415.6, 415.6.1, 415.6.1.1, 415.6.1.4, Table 415.6.2, 415.7.3, 415.8.2, 415.9, 415.9.1, 415.9.1.3, 415.9.1.4, 415.9.1.6, 415.9.1.7, 415.9.1.8, 415.9.2, 415.9.3, 415.10, 415.11, 415.11.1.7, 415.11.4, 415.11.7.2, 415.11.9.3, 415.11.10.1, 416.1, 416.4, 421.1, 422.3.1, 426.1.4, Table 504.3, Table 504.4, Table 506.2, 507.4, 507.8.1.1.1, 507.8.1.1.2, 507.8.1.1.3, 705.8.1, 707.1, 901.2, 901.3, 901.5, 901.6.2, 901.6.3, 903.1.1, 903.2.7.1, 903.2.11.6, 903.2.12, 903.5, 904.2.1, 904.12.3, 905.1, 905.3.6, 906.1, 907.1.8, 907.2.5, 907.2.13.2, 907.2.15, 907.2.16, 907.6.5, 907.8, 909.20, 910.2.2, 1001.3, 1001.4, 1010.1.9.6, 1203.5.2, 1203.6, 1507.16, 1512.1, Table 1604.5, 2603.4.1.12, 2702.1, 2702.1.2, 2702.2.3, 2702.2.8, 2702.2.9, 2702.2.11, 2702.2.12, 2702.2.13, 2702.4, 3003.3, 3008.1.2, 3102.1, 3103.1, 3111.1, 3111.1.1, 3302.3, 3303.7, 3309.2~~
~~IFGC-15~~	~~International Fuel Gas Code®~~	~~101.4.1, 201.3, Table 307.1(1), 415.9.2, 2113.11.1.2, 2113.15, 2801.1~~
~~IMC-15~~	~~International Mechanical Code®~~	~~101.4.2, 201.3, 307.1.1, Table 307.1(1), 406.6.2, 406.8.2, 406.8.4, 409.3, 412.6.6, 414.1.2, 414.3, 415.8.1.4, 415.8.2, 415.8.2.7, 415.8.3, 415.8.4, 415.10.11, 415.10.11.1, 416.2.2, 413.3, 416.3, 417.1, 419.8, 421.5, 603.1, 603.1.1, 603.1.2, 712.1.6, 717.2.2, 717.5.3, 717.5.4, 717.6.1, 717.6.2, 717.6.3, 718.5, 720.1, 720.7, 903.2.11.4, 904.2.1, 904.11, 907.3.1, 908.6, 909.1, 909.10.2, 909.13.1, 1006.2.2.3, 1011.6, 1020.5.1, 1203.1, 1203.2.1, 1203.5.2, 1203.5.2.1, 1203.6, 1209.3, 2801.1~~
~~IPC-15~~	~~International Plumbing Code®~~	~~101.4.3, 201.3, 415.9.3, 603.1.2, 718.5, 903.3.5, 904.12.1.3, 912.6, 1206.3.3, 1503.4, 1503.4.1, 1805.4.3, 2901.1, Table 2902.1, 3305.1, A101.2~~
~~IPMC-15~~	~~International Property Maintenance Code®~~	~~101.4.4, 102.6, 103.3~~
~~IPSDC-15~~	~~International Private Sewage Disposal Code®~~	~~.101.4.3, 2901.1~~
~~IRC-15~~	~~International Residential Code®~~	~~101.2, 305.2.3, 308.3.4, 308.4.2, 308.6.4, 310.1, 310.5.1, 310.5.2, 2308.1, 3401.3~~

~~IWUIC-15~~	~~International Wildland-Urban Interface Code™~~	~~Table 1505.1~~
SBCCI SSTD 11-97	Test Standard for Determining Wind Resistance of Concrete or Clay Roof Tiles	1504.2.1.1, 1504.2.1.2

NFPA	National Fire Protection Association 1 Batterymarch Park Quincy, MA 02169-7471	
Standard Reference Number	Title	Referenced in code section number
720 – 15	Standard for the Installation of Carbon Monoxide (CO) Detection and Warning Equipment	*915.4.1, 915.5.1, 915.5.2, 915.5.6, 915.5.7* ~~*420.6, 915.1.6.1, 915.1.6.2*~~

UL	Underwriters Laboratories, Inc. 333 Pfingsten Road Northbrook, IL 60062-2096	
Standard Reference Number	Title	Referenced in code section number
~~*2034*~~	~~*Single and Multiple Station Carbon Monoxide Alarms effective August 1, 2009*~~	~~*420.4*~~
2034 - 2008	Standard for Single- and Multiple Station Carbon Monoxide Alarms with revision through February 2009	~~*420.6,*~~ 915.4.2, 915.4.3
2075 - 2013	Standard for Gas and Vapor Detectors and Sensors	~~*420.6*~~ 421.6.2, 406.8.5.1.1, 915.5.1, 915.5.3

NOTE:
Authority Cited: Health and Safety Code Sections 17040, 17050, 17920.9, 17921, 17921.3, 17921.6, 17921.10, 17922, 17922.6, 17922.12, 17927, 17928, 17959.6, 18300, 18552, 18554, 18620, 18630, 18640, 18670, 18690, 18691, 18865, 18871.3, 18871.4, 18873, 18873.1, 18873.2, 18873.3, 18873.4, 18873.5, 18938.3, 18944.11 and 19990; and Government Code Section 12955.1.

Reference: Health and Safety Code Sections 17000 through 17062.5, 17910 through 17995.5, 18200 through 18700, 18860 through 18874, and 19960 through 19997; and Government Code Sections 12955.1 and 12955.1.1.

---

44. HCD proposes NOT to adopt Appendix A from the 2015 International Building Code.

APPENDIX A
EMPLOYEE QUALIFICATIONS

NOTE:
Authority Cited: Health and Safety Code Sections 17040, 17050, 17920.9, 17921, 17921.3, 17921.6, 17921.10, 17922, 17922.6, 17922.12, 17927, 17928, 17959.6, 18300, 18552, 18554, 18620, 18630, 18640, 18670, 18690,

18691, 18865, 18871.3, 18871.4, 18873, 18873.1, 18873.2, 18873.3, 18873.4, 18873.5, 18938.3, 18944.11 and 19990; and Government Code Section 12955.1.

Reference: Health and Safety Code Sections 17000 through 17062.5, 17910 through 17995.5, 18200 through 18700, 18860 through 18874, and 19960 through 19997; and Government Code Sections 12955.1 and 12955.1.1.

---

45. HCD proposes NOT to adopt Appendix B from the 2015 International Building Code.

APPENDIX B
BOARD OF APPEALS

NOTE:
Authority Cited: Health and Safety Code Sections 17040, 17050, 17920.9, 17921, 17921.3, 17921.6, 17921.10, 17922, 17922.6, 17922.12, 17927, 17928, 17959.6, 18300, 18552, 18554, 18620, 18630, 18640, 18670, 18690, 18691, 18865, 18871.3, 18871.4, 18873, 18873.1, 18873.2, 18873.3, 18873.4, 18873.5, 18938.3, 18944.11 and 19990; and Government Code Section 12955.1.

Reference: Health and Safety Code Sections 17000 through 17062.5, 17910 through 17995.5, 18200 through 18700, 18860 through 18874, and 19960 through 19997; and Government Code Sections 12955.1 and 12955.1.1.

---

46. HCD proposes NOT to adopt Appendix C from the 2015 International Building Code.

APPENDIX C
GROUP U – AGRICULTURAL BUILDINGS

NOTE:
Authority Cited: Health and Safety Code Sections 17040, 17050, 17920.9, 17921, 17921.3, 17921.6, 17921.10, 17922, 17922.6, 17922.12, 17927, 17928, 17959.6, 18300, 18552, 18554, 18620, 18630, 18640, 18670, 18690, 18691, 18865, 18871.3, 18871.4, 18873, 18873.1, 18873.2, 18873.3, 18873.4, 18873.5, 18938.3, 18944.11 and 19990; and Government Code Section 12955.1.

Reference: Health and Safety Code Sections 17000 through 17062.5, 17910 through 17995.5, 18200 through 18700, 18860 through 18874, and 19960 through 19997; and Government Code Sections 12955.1 and 12955.1.1.

---

47. HCD proposes NOT to adopt Appendix D from the 2015 International Building Code.

APPENDIX D
FIRE DISTRICTS

NOTE:
Authority Cited: Health and Safety Code Sections 17040, 17050, 17920.9, 17921, 17921.3, 17921.6, 17921.10, 17922, 17922.6, 17922.12, 17927, 17928, 17959.6, 18300, 18552, 18554, 18620, 18630, 18640, 18670, 18690, 18691, 18865, 18871.3, 18871.4, 18873, 18873.1, 18873.2, 18873.3, 18873.4, 18873.5, 18938.3, 18944.11 and 19990; and Government Code Section 12955.1.

Reference: Health and Safety Code Sections 17000 through 17062.5, 17910 through 17995.5, 18200 through 18700, 18860 through 18874, and 19960 through 19997; and Government Code Sections 12955.1 and 12955.1.1.

48. HCD proposes NOT to adopt Appendix E from the 2015 International Building Code.

APPENDIX E
SUPPLEMENTARY ACCESSIBILITY REQUIREMENTS

NOTE:
Authority Cited: Health and Safety Code Sections 17040, 17050, 17920.9, 17921, 17921.3, 17921.6, 17921.10, 17922, 17922.6, 17922.12, 17927, 17928, 17959.6, 18300, 18552, 18554, 18620, 18630, 18640, 18670, 18690, 18691, 18865, 18871.3, 18871.4, 18873, 18873.1, 18873.2, 18873.3, 18873.4, 18873.5, 18938.3, 18944.11 and 19990; and Government Code Section 12955.1.

Reference: Health and Safety Code Sections 17000 through 17062.5, 17910 through 17995.5, 18200 through 18700, 18860 through 18874, and 19960 through 19997; and Government Code Sections 12955.1 and 12955.1.1.

49. HCD proposes NOT to adopt Appendix F from the 2015 International Building Code.

APPENDIX F
RODENTPROOFING

NOTE:
Authority Cited: Health and Safety Code Sections 17040, 17050, 17920.9, 17921, 17921.3, 17921.6, 17921.10, 17922, 17922.6, 17922.12, 17927, 17928, 17959.6, 18300, 18552, 18554, 18620, 18630, 18640, 18670, 18690, 18691, 18865, 18871.3, 18871.4, 18873, 18873.1, 18873.2, 18873.3, 18873.4, 18873.5, 18938.3, 18944.11 and 19990; and Government Code Section 12955.1.

Reference: Health and Safety Code Sections 17000 through 17062.5, 17910 through 17995.5, 18200 through 18700, 18860 through 18874, and 19960 through 19997; and Government Code Sections 12955.1 and 12955.1.1.

50. HCD proposes NOT to adopt Appendix G from the 2015 International Building Code.

APPENDIX G
FLOOD-RESISTANT CONSTRUCTION

NOTE:
Authority Cited: Health and Safety Code Sections 17040, 17050, 17920.9, 17921, 17921.3, 17921.6, 17921.10, 17922, 17922.6, 17922.12, 17927, 17928, 17959.6, 18300, 18552, 18554, 18620, 18630, 18640, 18670, 18690, 18691, 18865, 18871.3, 18871.4, 18873, 18873.1, 18873.2, 18873.3, 18873.4, 18873.5, 18938.3, 18944.11 and 19990; and Government Code Section 12955.1.

Reference: Health and Safety Code Sections 17000 through 17062.5, 17910 through 17995.5, 18200 through 18700, 18860 through 18874, and 19960 through 19997; and Government Code Sections 12955.1 and 12955.1.1.

51. HCD proposes NOT to adopt Appendix H from the 2015 International Building Code.

APPENDIX H
SIGNS

NOTE:
Authority Cited: Health and Safety Code Sections 17040, 17050, 17920.9, 17921, 17921.3, 17921.6, 17921.10, 17922, 17922.6, 17922.12, 17927, 17928, 17959.6, 18300, 18552, 18554, 18620, 18630, 18640, 18670, 18690, 18691, 18865, 18871.3, 18871.4, 18873, 18873.1, 18873.2, 18873.3, 18873.4, 18873.5, 18938.3, 18944.11 and 19990; and Government Code Section 12955.1.

Reference: Health and Safety Code Sections 17000 through 17062.5, 17910 through 17995.5, 18200 through 18700, 18860 through 18874, and 19960 through 19997; and Government Code Sections 12955.1 and 12955.1.1.

---

52. HCD proposes to adopt Appendix I from the 2015 International Building Code into the 2016 California Building Code without amendments.

APPENDIX I
PATIO COVERS

NOTE:
Authority Cited: Health and Safety Code Sections 17040, 17050, 17920.9, 17921, 17921.3, 17921.6, 17921.10, 17922, 17922.6, 17922.12, 17927, 17928, 17959.6, 18300, 18552, 18554, 18620, 18630, 18640, 18670, 18690, 18691, 18865, 18871.3, 18871.4, 18873, 18873.1, 18873.2, 18873.3, 18873.4, 18873.5, 18938.3, 18944.11 and 19990; and Government Code Section 12955.1.

Reference: Health and Safety Code Sections 17000 through 17062.5, 17910 through 17995.5, 18200 through 18700, 18860 through 18874, and 19960 through 19997; and Government Code Sections 12955.1 and 12955.1.1.

---

53. HCD proposes to adopt Appendix J from the 2015 International Building Code into the 2016 California Building Code with new amendment as follows:

APPENDIX J
GRADING

SECTION J104
PERMIT APPLICATION AND SUBMITTALS

J104.1 Submittal requirements. In addition to the provisions of Sections 105.3 *or 1.8.4*, *as applicable*, the applicant shall state the estimated quantities of excavation and fill.

NOTE:
Authority Cited: Health and Safety Code Sections 17040, 17050, 17920.9, 17921, 17921.3, 17921.6, 17921.10, 17922, 17922.6, 17922.12, 17927, 17928, 17959.6, 18300, 18552, 18554, 18620, 18630, 18640, 18670, 18690, 18691, 18865, 18871.3, 18871.4, 18873, 18873.1, 18873.2, 18873.3, 18873.4, 18873.5, 18938.3, 18944.11 and 19990; and Government Code Section 12955.1.

Reference: Health and Safety Code Sections 17000 through 17062.5, 17910 through 17995.5, 18200 through 18700, 18860 through 18874, and 19960 through 19997; and Government Code Sections 12955.1 and 12955.1.1.

---

54. HCD proposes NOT to adopt Appendix K from the 2015 International Building Code.

APPENDIX K
ADMINISTRATIVE PROVISIONS

NOTE:
Authority Cited: Health and Safety Code Sections 17040, 17050, 17920.9, 17921, 17921.3, 17921.6, 17921.10, 17922, 17922.6, 17922.12, 17927, 17928, 17959.6, 18300, 18552, 18554, 18620, 18630, 18640, 18670, 18690, 18691, 18865, 18871.3, 18871.4, 18873, 18873.1, 18873.2, 18873.3, 18873.4, 18873.5, 18938.3, 18944.11 and 19990; and Government Code Section 12955.1.

Reference: Health and Safety Code Sections 17000 through 17062.5, 17910 through 17995.5, 18200 through 18700, 18860 through 18874, and 19960 through 19997; and Government Code Sections 12955.1 and 12955.1.1.

---

55. HCD proposes NOT to adopt Appendix L from the 2015 International Building Code.

APPENDIX L
EARTHQUAKE RECORDING INSTRUMENTATION

NOTE:
Authority Cited: Health and Safety Code Sections 17040, 17050, 17920.9, 17921, 17921.3, 17921.6, 17921.10, 17922, 17922.6, 17922.12, 17927, 17928, 17959.6, 18300, 18552, 18554, 18620, 18630, 18640, 18670, 18690, 18691, 18865, 18871.3, 18871.4, 18873, 18873.1, 18873.2, 18873.3, 18873.4, 18873.5, 18938.3, 18944.11 and 19990; and Government Code Section 12955.1.

Reference: Health and Safety Code Sections 17000 through 17062.5, 17910 through 17995.5, 18200 through 18700, 18860 through 18874, and 19960 through 19997; and Government Code Sections 12955.1 and 12955.1.1.

---

56. HCD proposes NOT to adopt Appendix M from the 2015 International Building Code.

APPENDIX M
TSUNAMI-GENERATED FLOOD HAZARD

NOTE:
Authority Cited: Health and Safety Code Sections 17040, 17050, 17920.9, 17921, 17921.3, 17921.6, 17921.10, 17922, 17922.6, 17922.12, 17927, 17928, 17959.6, 18300, 18552, 18554, 18620, 18630, 18640, 18670, 18690, 18691, 18865, 18871.3, 18871.4, 18873, 18873.1, 18873.2, 18873.3, 18873.4, 18873.5, 18938.3, 18944.11 and 19990; and Government Code Section 12955.1.

Reference: Health and Safety Code Sections 17000 through 17062.5, 17910 through 17995.5, 18200 through 18700, 18860 through 18874, and 19960 through 19997; and Government Code Sections 12955.1 and 12955.1.1.

FINAL EXPRESS TERMS
FOR
PROPOSED BUILDING STANDARDS
OF THE
OFFICE OF STATEWIDE HEALTH PLANNING AND DEVELOPMENT

REGARDING PROPOSED CHANGES TO
CALIFORNIA BUILDING CODE
CALIFORNIA CODE OF REGULATIONS, TITLE 24, PART 2, VOLUME 1

LEGEND FOR EXPRESS TERMS
1. Existing California amendments or code language being modified are in italics when they appear in the model code text: All such language appears in *italics*, modified language is underlined.
2. New California amendments: All such language appears *underlined and in italics*.
3. Repealed text: All such language appears in ~~strikeout~~.

INITIAL EXPRESS TERMS

CHAPTER 1
SCOPE AND ADMINISTRATION
DIVISION I
CALIFORNIA ADMINISTRATION

Carry forward existing California Chapter 1, Division I of the 2013 California Building Code (CBC) for OSHPD 1, 2, 3 & 4.

DIVISION II
SCOPE AND ADMINISTRATION

Adopt only those sections of the 2015 International Building Code (IBC) Chapter previously adopted and carry forward existing amendments of the 2013 California Building Code (CBC) for OSHPD 1, 2, 3 & 4 with the following modifications:

PART 1 – SCOPE AND APPLICATION

SECTION 101
GENERAL

...

[A] 101.4.6 Energy. The provisions of the *California Energy Code* shall apply to all matters governing the design and construction of buildings for energy efficiency.

~~***Exception: [OSHPD 1, 2, & 4] Not required by OSHPD.***~~

...

NOTATION:
Authority: Health and Safety Code Sections 1275, 18928, 129790 and 129850; Government 11152.5
Reference: Health and Safety Code Section 129850

CHAPTER 2
DEFINITIONS

Adopt entire 2015 International Building Code (IBC) Chapter and carry forward existing amendments of the 2013 California Building Code (CBC) for OSHPD 1, 2 & 4.

NOTATION:
Authority: Health and Safety Code Sections 1275, 18928, 129790 and 129850; Government 11152.5

Reference: Health and Safety Code Section 129850

CHAPTER 3
USE AND OCCUPANCY CLASSIFICATION

Adopt entire 2015 International Building Code (IBC) Chapter without amendments for OSHPD 1, 2 & 4.

NOTATION:
Authority: Health and Safety Code Sections 1275, 18928, 129790 and 129850; Government 11152.5
Reference: Health and Safety Code Section 129850

CHAPTER 4
SPECIAL DETAILED REQUIREMENTS BASED ON USE AND OCCUPANCY

Adopt entire 2015 International Building Code (IBC) Chapter without amendments for OSHPD 1, 2 & 4.

NOTATION:
Authority: Health and Safety Code Sections 1275, 18928, 129790 and 129850; Government 11152.5
Reference: Health and Safety Code Section 129850

CHAPTER 5
GENERAL BUILDING HEIGHTS AND AREAS

Adopt entire 2015 International Building Code (IBC) Chapter without amendments for OSHPD 1, 2 & 4.

NOTATION:
Authority: Health and Safety Code Sections 1275, 18928, 129790 and 129850; Government 11152.5
Reference: Health and Safety Code Section 129850

CHAPTER 6
TYPES OF CONSTRUCTION

Adopt entire 2015 International Building Code (IBC) Chapter without amendments for OSHPD 1, 2 & 4.

NOTATION:
Authority: Health and Safety Code Sections 1275, 18928, 129790 and 129850; Government 11152.5
Reference: Health and Safety Code Section 129850

CHAPTER 7
FIRE-RESISTANCE-RATED CONSTRUCTION

Adopt entire 2015 International Building Code (IBC) Chapter without amendments for OSHPD 1, 2 & 4.

NOTATION:
Authority: Health and Safety Code Sections 1275, 18928, 129790 and 129850; Government 11152.5
Reference: Health and Safety Code Section 129850

CHAPTER 8
INTERIOR FINISHES

Adopt entire 2015 International Building Code (IBC) Chapter without amendments for OSHPD 1, 2 & 4.

NOTATION:
Authority: Health and Safety Code Sections 1275, 18928, 129790 and 129850; Government 11152.5
Reference: Health and Safety Code Section 129850

CHAPTER 9
FIRE PROTECTION SYSTEMS

Adopt entire 2015 International Building Code (IBC) Chapter without amendments for OSHPD 1, 2 & 4.

NOTATION:
Authority: Health and Safety Code Sections 1275, 18928, 129790 and 129850; Government 11152.5
Reference: Health and Safety Code Section 129850

CHAPTER 10
MEANS OF EGRESS

Adopt entire 2015 International Building Code (IBC) Chapter and carry forward existing amendments of the 2013 California Building Code (CBC) for OSHPD 1, 2 & 4.

NOTATION:
Authority: Health and Safety Code Sections 1226, 1275, 18928, 129790 and 129850; Government 11152.5
Reference: Health and Safety Code Section 129850

CHAPTER 11
ACCESSIBILITY

Entire Chapter not adopted for OSHPD 1, 2, 3, & 4.

NOTATION:
Authority: Health and Safety Code Sections 1226, 1275, 18928, 129790 and 129850; Government 11152.5
Reference: Health and Safety Code Section 129850

CHAPTER 12
INTERIOR ENVIRONMENT

Adopt entire 2015 International Building Code (IBC) Chapter and carry forward existing amendments of the 2013 California Building Code (CBC) for OSHPD 1, 2, 3 & 4 with the following modifications:

SECTION 1210
TOILET AND BATHROOM REQUIREMENTS

...

1210.2 Finish materials. Walls, floors and partitions in toilet and bathrooms shall comply with Sections 1210.2.1 through 1210.2.4.

[OSHPD 1, 2 & 3] Facilities subject to OSHPD 1, 2, & 3 shall also comply with Section 1224.4.11.

[OSHPD 4] Facilities subject to OSHPD 4 shall also comply with Section 1227.9.

...

SECTION 1224 [OSHPD 1]
HOSPITALS

1224.1 Scope. ...

1224.2 Application. *New buildings and additions, alterations or repairs to existing buildings subject to licensure shall comply with applicable provisions of the California Electrical Code, California Mechanical Code, California Plumbing Code, California Energy Code, California Fire Code (Parts 3, 4. 5, 6 and 9 of Title 24) and this section.*

Exceptions:

1. ...

2. A change in function shall require compliance with all the functional requirements for new construction in this code, including requirements in Sections 1224, 1225, 1226, and 1227.

~~2.~~ 3. The provisions of this section do ~~no~~ not prohibit the use of alternate space utilization...

~~3.~~ 4. Nothing in this section ...

~~4.~~ 5. Acute psychiatric hospitals ...

~~5.~~ 6. When the Corrections Standards Authority ...

...

1224.3 Definitions

Specific terms and definitions are provided to facilitate consistency in the interpretation and application of these requirements. Some of these terms may have a broader definition in other contexts, but the definitions provided here reflect the use of the terms for OSHPD requirements.

...

CHANGE IN FUNCTION. *A change in function is a change in activity, service or licensed service provided, within the project limits, that does not necessarily change the use, specific use, and/or occupancy. Conversion of a space that results in a change in activity such that the space will be required to satisfy the functional space requirements under a different code sub-section than that of the prior use is considered a change in function.*

...

CLEAR DIMENSION. *An unobstructed room dimension exclusive of built-in casework and equipment and available for functional use.*

...

LOCATION TERMINOLOGY *(terms for relationship to an area or room)*

IN. *Located within the identified area or room.*

DIRECTLY ACCESSIBLE. *Connected to the identified area or room through a doorway, pass-through, or other opening without going through an intervening room or public space.*

ADJACENT. *Located next to but not necessarily connected to the identified area or room.*

IMMEDIATELY ACCESSIBLE. *Available either in or adjacent to the identified area or room.*

READILY ACCESSIBLE. *Available on the same floor as the identified area or room.*

...

OPERATING ROOM. *A room specifically designed for the performance of surgical procedures. (In common understanding, this means most types of surgical procedures, especially those involving the administration of anesthesia, multiple personnel, recovery room access, and a fully controlled environment.*

HYBRID OPERATING ROOM. *A room that meets the definition of an operating room and is also equipped to enable diagnostic imaging before, during, and after surgical procedures. Imaging equipment is permanently installed in the room and may include MRI, fixed single-plane and bi-plane tomographic imaging systems, and computed tomographic equipment.* ***Note:*** *Use of portable imaging technology does not make an operating room a hybrid operating room.*

...

PATIENT CARE LOCATIONS

BAY (patient). *A space for human occupancy with one hard wall at the headwall and three soft walls (e.g., cubicle curtains or portable privacy screen).*

CUBICLE. *A space intended for human occupancy that has at least one opening and no door and is enclosed on three sides with full-height or partial-height partitions.*

PATIENT CARE STATION. *A designated space for a specific patient care function. This term does not imply any structural requirement (e.g., a Post-anesthesia Care Unit (PACU)) can have 10 patient care stations of which three are rooms, three are cubicles, and four are bays).*

...

ROOM. *A space enclosed by hard walls and having a door. Where the word "room" or "office" is used, a separate, enclosed space for the one named function is intended. Otherwise, the described area may be a specific space in another room or common area.*

...

1224.4 GENERAL CONSTRUCTION.

1224.4.1 Services/systems and utilities. *See Section 3416A ~~or 3424 for single-story light frame skilled nursing facilities and intermediate care facilities.~~*

1224.4.2 Environmental engineering and support ~~S~~service spaces. ...

...

1224.4.4 Support areas for ~~patients~~ patient care. *Identifiable spaces shall be provided for each function indicated in all Basic and applicable Supplemental Service Space sections with requirements for support areas. The following rooms and spaces are common to most types of health care facilities and the requirements associated with each, as listed below, shall be used unless modified under a specific Service Space section.*

Relocate *Section 1224.14.2.1 "Administrative center(s) or nurse station(s)"* to *Section 1224.4.4.2* and re-number *"Specimen and blood collection facilities"* as new *Section 1224.4.4.3:*

1224.4.4.2 Administrative center(s) or nurse station(s). *This area shall have space for counters and storage and ~~shall have convenient access to handwashing fixtures~~ at least one hand-washing station shall be located in, adjacent to, or directly accessible to the administrative center or nurse station. It may be combined with or include centers for reception, charting and communication.*

1224.4.4.3 ~~1224.4.4.2~~ Specimen and blood collection facilities.

1224.4.4.3.1 ~~1224.4.4.2.1~~ Specimen collection facilities.

Relocate *Section 1224.14.2.8 "Medication station"* to new *Section 1224.4.4.4* and format as a list:

1224.4.4.4 Medication station. *Provision shall be made for distribution of medications. This shall be done from a medication preparation room or from a self-contained dispensing unit.*

1224.4.4.4.1 Medication preparation room. *If provided, this room shall be directly accessible from the nursing station. ~~It shall contain a work counter, handwashing fixture, refrigerator, and locked storage for controlled drugs.~~ When a medicine preparation room is to be used to store one or more self-contained medicine dispensing units, the room shall be designed with adequate space to prepare medicines with the self-contained medicine dispensing unit(s) present. Medicine preparation rooms shall include:*

1. *Work counter.*
2. *Handwashing station.*
3. *Refrigerator.*
4. *Locked storage for controlled drugs.*

1224.4.4.4.2 Self-contained medication dispensing unit. *If provided, a self-contained medicine dispensing unit shall be located at the nurses' station, in the clean utility room, or in an alcove.*

Relocate *Section 1224.14.2.10 "Nourishment area"* to new *Section 1224.4.4.5* and format as a list:

1224.4.4.5 Nourishment area or room. *~~There shall be a nourishment area with~~ Nourishment areas or rooms required in patient care areas shall include the following:*

1. Sink
2. Work counter
3. Refrigerator
4. Storage cabinets~~, and~~
~~5.~~ Equipment for hot and cold nourishment between scheduled meals.
6. The nourishment shall include space for trays and dishes used for nonscheduled meal service.
7. Provisions and space shall be included for separate temporary storage of unused and soiled dietary trays not picked up at mealtime.
8. Handwashing fixtures separate from the nourishment sink shall be in or adjacent to the nourishment area.

Relocate *Section 1224.14.2.6 "Clean utility room"* to new *Section 1224.4.4.6* and format as a list:

***1224.4.4.6* Clean utility/workroom.** *The clean workroom or clean supply room shall be separate from and have no connection with the soiled workroom or soiled holding room. If the room is used for preparing patient care items, it shall contain the following~~:~~*

1. ~~a w~~Work counter
2. ~~a h~~Handwashing station ~~fixture, and~~
3. ~~s~~Storage facilities for clean and sterile supplies

1224.4.4.6.1 Clean supply room. *If the room is used only for storage and holding as part of a system for distribution of clean and sterile materials, the work counter or a handwashing station may be omitted. ~~Soiled and clean utility or holding rooms shall be separated and have no direct connection.~~*

Relocate *Section 1224.14.2.7 "Soiled workroom or soiled holding room"* as new *Section 1224.4.4.7* and format as a list:

***1224.4.4.7* Soiled utility/workroom ~~or soiled holding room~~.** *~~This~~ The soiled workroom or soiled holding room shall be separate from and have no connection with either ~~the~~ clean workrooms or clean supply rooms. The soiled ~~workroom utilities~~ utility/workroom shall contain ~~a~~*

1. ~~c~~Clinical sink (or equivalent flushing-rim fixture). ~~The room shall contain~~
2. ~~a h~~Handwashing station ~~fixture. The above fixtures shall both have a hot and cold mixing faucet. The room shall have~~
3. ~~a w~~Work counter ~~and~~
4. ~~s~~Space for separate covered containers for soiled linen and/or waste~~.~~

1224.4.4.7.1 Soiled holding room. *Rooms used only for temporary holding soiled material may omit the clinical sink and work counter. If the flushing-rim clinical sink is eliminated, facilities for cleaning bedpans shall be provided elsewhere.*

Amend *Section 1224.4.5* with defined terms added to *Section 1224.3.*
1224.4.5 Outpatient waiting rooms. *Waiting rooms for outpatients shall provide a seating area and space for wheelchairs and have public corridor access. ~~to, or provisions for,~~ ~~p~~Public toilets, drinking fountains and telephone shall be readily accessible.*

Amend *Section 1224.6.3* and *Table 1224.4.6.1 "Station Outlets for Oxygen, Vacuum (Suction), and Medical Air":*

1224.4.6 Miscellaneous requirements.

...

1224.4.6.3 Hyperbaric facilities. *The design and construction of hyperbaric facilities shall conform to NFPA 99; Health Care Facilities and Section 1224.39.5.*

...

TABLE 1224.4.6.1
STATION OUTLETS FOR OXYGEN, VACUUM (SUCTION), AND MEDICAL AIR [1, 6]

	LOCATION	OXYGEN	VACUUM	MEDICAL AIR
21	~~Not used~~ Endoscopy procedure room	1/room	3/room	-
...	...	...	...	...
36	Autopsy room	-	1 per workstation	-
37	MRI	1/room	1/room	1/room
38	Interventional imaging procedure room	2/room	2/room	1/room
39	Hyperbaric suite pre-procedure/patient holding area	2/station	2/station	-
40	Electroconvulsive therapy procedure room	1/room	1/room	-

...

TABLE 1224.4.6.5
[OSHPD 1, 2, 3 & 4] LOCATION OF NURSE CALL DEVICES

KEY: ● Required

Area Designation	Patient Station	Bath Station	Staff Emergency Station	Code Call Station	Nurse Master Station	Duty Station	Notes
Nursing Units							
Patient toilets, ~~showers, and baths~~		●					2
Patient ~~toilets,~~ showers, and baths		●					2
~~Inpatient~~ Nursing Unit bed location	●	~~●~~					1, 2, 3, 4
Critical care bed locations, including NICU	●		●	●			1, 2, 4, 5
LDR/LDRP rooms	●		●	●			1, 2, 3, 4
Newborn and special care nurseries			●	●			
Examination/treatment room			●			●	
Support Areas							
Nurse/control station					●		
Medication preparation room						●	
Clean workroom						●	
Soiled workroom						●	

Staff lounge						•	
~~Other Clinical Areas~~ Diagnostic & Treatment Areas							
Psychiatric seclusion ante/exam rooms			•				
~~Operating and c~~Cesarean delivery rooms			•				2
Emergency exam, treatment, triage rooms	•		•	•			1, 2, 4
Observation unit patient station			•				
Operating ~~and cesarean delivery~~ rooms			•				2
Preoperative patient care area ~~preparation and holding areas~~	•		•				1, 2
Recovery—PACU			•	•			2, 4
MRI, CT, stress testing areas			•	•			2, 4
Diagnostic radiology, fluoroscopy and ultrasound procedure room			•				2
Cardiac catheterization, interventional imaging ~~radiology,~~ angiography			•	•			
Nuclear medicine procedure room Endoscopy procedure room			•				2
Electroconvulsive therapy procedure room			•				

Notes

1. *One device shall be permitted to accommodate both patient station and emergency staff assistance station functionality.*
2. *A visible signal shall be activated in the corridor at the patient's door, at the nurse/control station, and at all duty stations. In multi-corridor nursing units, additional visible signals shall be installed at corridor intersections.*
3. *Two-way voice communication shall be provided with the nurse/control station. **Exception:** Skilled nursing facilities.*
4. *One device shall be permitted to accommodate both emergency staff assistance and code call station functionality.*
5. *A patient station shall not be required in the NICU.*

Add subsection *1224.4.8:*

1224.4.7 Corridors.

...

1224.4.7.5 Connections. *Corridor systems shall connect all patient rooms and basic services.*

Exception: *Covered pedestrian walkways connecting separate buildings are permitted for ambulatory, psychiatric or chemical dependency patients.*

1224.4.7.6 Departmental boundaries. *Department/service space areas shall be contiguous and include internal circulation to access each of the rooms/spaces associated with it, as identified under the specific Service Space requirements.*

Amend *Section 1224.4.9.1:*

1224.4.9 Windows and screens.

1224.4.9.1 Windows. *Rooms approved for the housing of patients shall be provided with natural light by means of exterior glazed openings excluding clerestory windows, obscure glass and skylights, with an area not less than one tenth of the total floor area.*

~~Exception:~~ *Newborn intensive care units shall also comply with Section 1224.29.2.13~~.12~~ Daylight.*

Relocate *Section 1224.5 "Noise Control"* as new *Section 1224.4.19:*

1224.5 Reserved ~~NOISE CONTROL.~~ ...

1224.4.19 Noise Control.

1224.4.19.1 ~~1224.5.1~~ Impact noises. *Recreation rooms, exercise rooms, equipment rooms and similar spaces where impact noises may be generated, shall not be located directly over patient bed areas or delivery and operating suites, unless special provisions are made to minimize such noise.*

1224.4.19.2 ~~1224.5.2~~ Noise reduction. *The noise reduction criteria shown in Table ~~1224.5~~ 1224.4.19 shall apply to partitions, floors, and ceiling construction in patient areas.*

Relocate "*Table 1224.4 SOUND TRANSIMISSION LIMITATION IN ACUTE CARE GENERAL HOSPITALS*" to new *Section 1224.4.19:*

TABLE ~~1224.5~~ 1224.4.19
SOUND TRANSMISSION LIMITATIONS
IN ~~ACUTE CARE GENERAL~~ HOSPITALS

...

1224.14 NURSING SERVICE SPACE.

...

1224.14.1.6 Handwashing stations ~~fixtures~~. *A handwashing station ~~fixture~~ shall be provided in the patient room. This handwashing station shall be located at or adjacent to the entrance to the patient room with unobstructed access for use by health care personnel and others entering and leaving the room. Water spouts used shall have clearances adequate to avoid contaminating utensils and the contents of carafes, etc. In multiple-bed rooms the handwashing station ~~fixture~~ shall be located outside of the patient's cubicle curtain so that it is immediately accessible to staff. Where renovation of patient rooms is undertaken a handwashing station ~~fixture~~ shall be located in the patient toilet room or patient room.*

...

1224.14.2 Service areas. *Unless otherwise indicated, provision for the services listed below shall be in or immediately ~~readily~~ accessible to each nursing unit. ...*

1224.14.2.1 Administrative center(s) or nurse station(s). *~~This area shall have space for counters ... charting and communication.~~ Administrative center(s) or nurse station shall be provided in accordance with Section 1224.4.4.2.*

1224.14.2.2 Nurse or supervisor office(s).

...

1224.14.2.4 Multipurpose room(s). *Multipurpose rooms shall be provided for staff, patients, patients' families for conferences, reports, education, training sessions, and consultation. These rooms must be readily accessible to each nursing unit. ~~They may be on other floors if convenient for regular use.~~ One such room may serve several nursing units and/or departments.*

...

1224.14.2.6 Clean utility/workroom. *~~If the room is used for preparing patient care items...shall be separated and have no direct connection.~~ Clean utility/workroom shall be provided in accordance with to Section 1224.4.4.6.*

1224.14.2.7 Soiled workroom or soiled holding room. *~~This room shall be separate from the clean utility room... facilities for cleaning bedpans shall be provided elsewhere.~~ Soiled workroom or soiled holding room shall be provided in accordance with Section 1224.4.4.7.*

***1224.14.2.8* Medication station.** ~~*Provision shall be made for distribution of medications... self-contained medicine dispensing unit.*~~ *Medication station shall be provided in accordance with Section 1224.4.4.4.*

~~***1224.14.2.8.1* Medicine preparation room....***~~

~~***1224.14.2.8.2* Self-contained medicine dispensing unit....***~~

...

***1224.14.2.10* Nourishment area.** ~~*There shall be a nourishment area with sink... in or adjacent to the nourishment area.*~~ *A nourishment area or room shall be provided in accordance with Section 1224.4.4.5.*

...

***1224.14.2.14* Showers and bathtubs.** *When individual bathing facilities are not provided in patient rooms, there shall be at least one shower and/or bathtub for each 12 beds without such facilities. Each bathtub or shower shall be in an individual room or enclosure that provides privacy for bathing, drying, and dressing.*

***1224.14.2.14.1* Special bathing facilities.** *Special bathing facilities, including space for attendant, shall be provided for patients on gurneys, carts, and wheelchairs at the ratio of one per 100 beds or a fraction thereof.* ~~*This*~~ *The special bathing facility may be located in a nursing unit on a separate floor* ~~*if convenient for use*~~*.*

***1224.14.2.15* Patient toilet room(s)**~~*,*~~*.* *Common patient toilet room(s), in addition to those serving bed areas, shall be* ~~*conveniently*~~ *located adjacent to multipurpose room(s)*~~*s*~~ *and within, or directly accessible to, each central bathing facility.*

***1224.14.3.6* Adjoining toilet room.** *Each isolation room shall have its own directly accessible* ~~*adjoining*~~ *toilet room with an emergency nurse call system, a lavatory, a shower providing a seat or a space for a shower chair and a toilet equipped with a bedpan flushing attachment with a vacuum breaker.*

Amend *Section 1224.15*:

1224.15 ~~***Surgical service space.***~~ ***SURGICAL SERVICE SPACE.*** ...

***1224.15.1* General.** *A minimum of one operating room* ~~*and one recovery bed*~~ *is required. The surgical service space shall be divided into two designated areas: 1) semi-restricted areas (e.g. storage areas for clean and sterile supplies, sterile processing rooms, scrub stations, and corridors leading to restricted areas of the surgical suite, etc.); and 2) restricted areas (e.g. operating rooms, hybrid operating rooms, sterile procedure rooms, cardiac catheterization labs, etc.) that can be reached only through a semi-restricted area. The surgical service space shall be located and arranged to provide direct support from the anesthesia/recovery service space with a common door to and to prevent nonrelated traffic through the surgical service space.*

An operating room suite design with a sterile core shall provide for no cross traffic of staff and supplies from decontaminated/soiled areas to the sterile/clean areas. The use of facilities outside the operating room for soiled/decontaminated processing and clean assembly and sterile processing shall be designed to move the flow of goods and personnel from dirty to clean/sterile without compromising universal precautions or aseptic techniques in ~~*both*~~ *either departments.*

Exception: *Surgical service space is not required in a rural general acute care hospital ... approved by the Department of Public Health, Licensing and Certification.*

~~***1224.15.1***~~ ***1224.15.2* Surgery.**

~~1224.15.1.1~~ 1224.15.2.1 **General operating room(s).** ~~In new construction, e~~Each room shall have a minimum clear floor area of 400 square feet (37.16 m^2) with a minimum of 20 feet (6096 mm) clear dimension between fixed cabinets and built-in shelves; and a system for emergency communication. X-ray or imaging viewing capabilities shall be provided.

Exception:

~~1.~~ Where renovation of existing operating rooms is undertaken in facilities built under the 2001 or prior California Building Code, each operating room shall have a minimum clear floor area of 324 square feet (30.10 m^2) with a minimum of 18 feet (5486 mm) clear dimension between fixed cabinets and built-in shelves.

~~2. For shelled floor spaces built under the 2001 or prior California Building Code, each existing operating room shall have a minimum clear floor area of 324 square feet (30.10 m^2) with a minimum of 18 feet (5486 mm) clear dimension between fixed cabinets and built-in shelves.~~

~~1224.15.1.2~~ 1224.15.2.2 **Surgical cystoscopic and other endo-urologic procedures.** ~~In new construction e~~Each room shall have a minimum clear floor area of 250 square feet (23.23 m^2) with a minimum of 15 feet (4572 mm) clear dimension between fixed cabinets and built-in shelves. X-ray viewing and/or other imaging modality ~~capability~~ capabilities shall be provided.

Exception:

~~1.~~ Where renovation of existing operating rooms is undertaken in facilities built under the 2001 or prior California Building Code, rooms for surgical cystoscopy shall have a minimum clear floor area of 180 square feet (16.72 m^2). Cast rooms for open reductions, if provided, shall have a minimum clear floor area of 180 square feet (16.72 m^2), no dimension of which shall be less than 11 feet (3353 mm).

~~2. For shelled spaces built under the 2001 or prior California Building Code, each surgical cystoscopy shall have a minimum clear floor area of 180 square feet (16.72 m^2). Cast rooms for open reductions, if provided, shall have a minimum floor area of 180 square feet (16.72 m^2), no dimension of which shall be less than 11 feet (5486 mm).~~

~~**1224.15.2 Preoperative patient holding area(s).** In facilities with two or more operating rooms...Provisions for patient privacy such as cubicle curtains shall be provided.~~

...

1224.15.3.3 Sub-sterile areas. If provided within the surgery suite, a sub-sterile area(s) shall be equipped with a flash sterilizer, warming cabinet, countertop, and handwashing station ~~fixture~~. If a sterilizing facility(ies) with high-speed sterilizer(s) or other sterilizing equipment for immediate or emergency use are provided, they shall be directly accessible from the operating room(s) it serves or shall be located inside the clean core if the clean core is directly accessible from the operating room(s). This room shall be accessible without traveling through any operating room. ~~grouped to service several operating rooms for convenient, efficient use; and a work space and handwashing fixture shall be included~~. Other facilities for processing and sterilizing reusable instruments, etc., may be located in another hospital department such as central sterile supply ~~services~~.

1224.15.3.4 Medication station. A medication station ~~S~~shall be provided in accordance with Section ~~1224.14.2.8~~ 1224.4.4.4.

Amend Section 1224.16.1:

1224.16 ANESTHESIA / RECOVERY SERVICE SPACE

1224.16.1 ***General*** ~~***Post-anesthetic care units (PACUs).***~~ ~~*Each PACU shall contain a medication station in accordance with Section 1224.14.2.8; handwashing fixtures; nurse control with charting facilities; clinical sink, refrigerator, provisions for bedpan cleaning; and storage space for gurneys, supplies, and equipment. Additionally, the design shall provide a minimum of 80 square feet (7.43 m²) for each patient position with a clearance of at least 5 feet (1524 mm) between patient gurneys and a minimum of 4 feet (1218 mm) between the sides and the foot of patient gurneys and adjacent walls or any other fixed obstructions. Provisions for patient privacy such as cubical curtains shall be made. In new construction, at least one door to the recovery room shall access directly from the surgical service space without crossing public corridors. Handwashing fixtures shall be provided with at least one for every four gurneys uniformly distributed to provide equal access from each patient gurney.*~~ *The anesthesia/recovery service space shall provide perioperative support services to the surgical service space as required under this section. Perioperative services shall include preoperative patient care and post-operative recovery with a Post-Anesthesia Care Unit (PACU). The anesthesia/recovery service space shall be located adjacent to the surgical service space with direct access to the surgical suite's semi-restricted corridor.*

Exception: *In a rural general acute care hospital, when the surgical service space is not required, the anesthesia/recovery service space is not required. The hospital must maintain written transfer agreements with one or more general acute care hospitals that provide surgical and anesthesia services. Written transfer agreements shall be approved by the Department of Public Health, Licensing and Certification.*

Relocate *Section 1224.15.2* as new *Section 1224.16.2*:

1224.16.2 ***Preoperative patient care area.*** *In facilities with two or more operating rooms, area(s) with patient care stations shall be provided to accommodate gurney patients or sitting space for ambulatory patients not requiring gurneys. The preoperative area is an unrestricted area and* ~~*These area(s)*~~ *shall be under direct visual control of the nursing staff and may be part of the recovery* ~~*service*~~ *space. If the preoperative patient care area will serve other purposes, such as overflow PACU or holding area, applicable requirements in Section 1224.16.3 PACU shall be met.*

1224.16.2.1 Space requirements. ~~*E*~~*each* ~~*gurney*~~ *station shall* ~~*be*~~ *have a minimum clear floor area of 80 square feet (7.43 m²); and* ~~*shall have*~~ *a minimum clearance of 3 feet (9133 mm)* ~~*on*~~ *shall be provided between the sides and foot of patient lounge chairs/gurneys and* ~~*foot of the gurney*~~ *adjacent walls, partitions or fixed elements.*

1224.16.2.2 Patient privacy. *Provisions for patient privacy such as cubicle curtains shall be made.*

1224.16.2.3 Handwashing stations. *Handwashing station(s) shall be provided in the preoperative service area at a ratio of one for each 4 stations in open bay areas. A handwashing station shall be provided in each single care station room.*

1224.16.3 Recovery and Post-Anesthetia Care Unit (PACUs). *The recovery area and Post-Anesthesia Care Unit is an unrestricted area and located such that at least one door to the recovery room shall provide access directly from the surgical service space without crossing unrestricted corridors. A minimum of 1.5, or major fraction thereof, post-anesthesia care stations per operating room shall be provided. If pediatric surgery is provided, pediatric recovery stations shall be provided. They shall be separate from adult stations, and shall include space for family or visitors and be visible from the nurse station.*

1224.16.3.1 Space requirements. *A minimum of 4 feet (1218 mm) clearance shall be provided between the sides and the foot of patient gurneys, or beds, and adjacent walls or other fixed elements. A minimum clear floor area of 80 square feet (7.43 m²) shall be provided for each station in an open-bay plan. A minimum clearance of 5 feet (1524 mm) shall be provided between*

patient gurneys or beds, and a minimum of 3 feet (914 mm) clearance shall be provided between the foot of the gurney or bed, to a closed cubicle curtain.

1224.16.3.2 Patient privacy. Provisions for patient privacy such as cubicle curtains shall be made.

1224.16.3.3 Handwashing stations. Handwashing stations shall be provided in the post-anesthesia care unit with at least one for every four patient positions uniformly distributed to provide equal access from each patient station. A handwashing station shall be provided in each single care station room.

1224.16.4 Reserved.

1224.16.5 Support areas for patient care

1224.16.5.1 Administrative area / nurse station. A nurse station shall be provided in postoperative patient care areas, and shall allow direct observation of the patients and charting facilities. The nurse station shall comply with the requirements of Section 1224.4.4.2.

1224.16.5.2 Clinical sink. A clinical sink shall be provided in postoperative patient care areas with provisions for bedpan cleaning.

1224.16.5.3 Medication station. Each Post-Anesthesia Care Unit shall contain a medication station. The medication station shall comply with the requirements of Section 1224.4.4.4.

1224.16.5.4 Ice-making. Ice-making equipment shall be provided in the perioperative service space. Ice-making equipment is permitted to be located in preoperative or postoperative patient care areas, however, it shall not be located in semi-restricted areas.

1224.16.5.5 Storage. Storage shall be provided for gurneys, supplies and equipment.

1224.16.6 Support areas for staff. Staff toilet rooms shall be immediately accessible to the postoperative patient care area(s) to maintain staff availability to patients.

1224.16.7 Support areas for patients, families, and visitors.

1224.16.7.1 Waiting area A waiting area, in compliance with Section 1224.4.5, shall be provided.

1224.16.7.2 Patient change area. A changing area shall be provided for outpatient use in perioperative areas in support of surgical suites that provide outpatient procedures. The changing area shall include space for changing or gowning, provisions for storing patients' belongings during the procedure, and access to patient toilet(s).

...

1224.18 RADIOLOGICAL/DIAGNOSTIC IMAGING SERVICE SPACE. Space and equipment shall be provided to accommodate all required elements, and any additional imaging modalities included in the service space, as required in this section. If interventional or image-guided procedures are performed in the imaging services area, additional provisions shall be as described in Section 1224.28 Supplemental Surgery and other Special Procedure Services. If nuclear medicine is provided in the imaging services area, spaces shall also comply with the requirements described in Section 1224.34 Nuclear Medicine.

1224.18.1 Minimum requirements. Hospital shall provide a minimum of:

...

3. A toilet room shall adjoin~~ing~~ and be directly accessible to each fluoroscopy room~~,~~. ~~i~~In addition to the fluoroscopy toilet rooms, ~~other~~ common patient toilet room facilities shall be located ~~adjacent to or~~ in the radiological/diagnostic imaging service space ~~immediate vicinity~~.

...

6. Handwashing stations ~~fixtures~~ located within the unit.

1224.18.2 Angiography. ...

1224.18.2.1 Interventional angiography procedures. *If interventional angiography procedures are to be performed in the angiography room, the suite ~~must~~ shall comply with ~~general operating room~~ interventional imaging requirements in Section ~~1224.15.1.1~~ 1224.28.4 ~~and have the support of the service areas in Section 1224.15.3~~. If cardiac catheterization procedures are performed refer to Section 1224.28.2.*

1224.18.3 Computerized tomography (CT) scanning. ...

1224.18.3.1 Spaces required. ...

1224.18.3.2 Intraoperative computerized tomography. *If provided, intraoperative CT scanning spaces shall comply with Section 1224.28.5.*

...

1224.18.4 Magnetic resonance imaging (MRI). ...

1224.18.4.1 Handwashing ~~Hand-washing~~ station. *Handwashing ~~Hand-washing~~ station(s) shall be ~~provided convenient~~ immediately accessible to the MRI scanner room~~, but need not be within the room~~.*

...

1224.18.4.6 Intraoperative magnetic resonance imaging. *If provided, the intraoperative magnetic resonance imaging (iMRI) suite shall comply with Section 1224.28.5.*

...

1224.18.7.2 Patient dressing ~~rooms~~ areas. *Dressing ~~rooms~~ areas shall be provided ~~convenient~~ adjacent to the imaging rooms.*

...

1224.19 PHARMACEUTICAL SERVICE SPACE

1224.19.1.2 Location. *Provide for ~~convenient~~ immediate accessibility to staff toilet rooms and lockers.*

1224.20 DIETETIC SERVICE SPACE

1224.20.2.3 Storage.

1. *Food storage spaces shall be ~~convenient~~ readily accessible to the receiving area and shall be located to exclude traffic through the food preparation area to reach them. Storage spaces for bulk, refrigerated, and frozen foods shall be provided. At least one week's (7 days) supply of staple foods and at least two (2) days' supply of frozen, and two (2) days' supply of perishable foods shall be maintained on the premises. Food storage components shall be grouped for convenient access from receiving and to the food preparation areas. All food shall be stored clear of the floor. Lowest shelf shall be not less than 12 inches (305 mm) above the floor or shall be closed in and sealed tight for ease of cleaning.*

...

4. *Waste storage and recycling facilities (per local requirements) shall be located in a separate room ~~easily~~ immediately accessible to the outside for direct pickup or disposal.*

1224.20.2.5 Food preparation workspaces. *Provide workspaces for food preparation, cooking, and baking. These areas shall be as close as possible to the user (i.e. tray assembly and dining). Provide additional spaces for thawing and portioning.*

1224.20.2.6 Assembly and distribution. *~~Provide a~~ The patient tray assembly area ~~and locate within close proximity~~ shall be immediately accessible to the food preparation and distribution areas.*

1224.20.2.10 Ware-washing facilities. ...

3. *~~Convenient h~~Handwashing stations shall be provided in the ware-washing space.*

1224.20.2.12 Waste storage room. *A food waste storage room shall be ~~conveniently located~~ readily accessible to the food preparation and ware washing areas but not within the food preparation area. It shall have direct access to the hospital's waste collection and disposal facilities.*

1224.20.2.15 Toilet rooms and locker spaces. *Toilet rooms shall be provided for the exclusive use of the dietary staff. They shall not open directly into the food preparation areas, but shall be ~~in close proximity~~ readily accessible to them. An enclosed, separate locker area shall be provided for dietetic service employee's clothing and personal belongings.*

...

1224.23 STORAGE.

1224.23.1 General storage. *Hospitals shall provide general storage space of at least 20 square feet (1.86 m^2) per bed in addition to specialized storage spaces. All storage spaces shall be located within the hospital building and readily accessible to the connecting corridor required under Section 1224.4.7.5 ~~on the site of the facility~~.*

...

1224.28 SUPPLEMENTAL SURGERY AND SPECIAL PROCEDURE SERVICES. *When provided, the following supplemental surgery and special procedure services shall meet the requirements below:*

1224.28.1 Cardiovascular and other special procedures. *When provided, the cardiovascular room shall have a minimum clear floor area of 650 square feet (60.39 m^2), with a minimum of 20 feet (6090 mm) clear dimension. Orthopedic surgical and other special procedure rooms shall have a minimum clear floor area of 600 square feet (55.74 m^2), with a minimum of 20 feet (6090 mm) clear dimension. When open-heart surgery is performed, an additional room in the restricted area of the surgical service space ~~preferably adjoining~~ that is directly accessible to this operating room, shall be designated as a pump room where extra corporeal pump(s), supplies and accessories are stored and serviced. Appropriate plumbing and electrical connections shall be provided in the cardiovascular, pump, and storage rooms.*

1224.28.2 Cardiac catheterization.

1224.28.2.1 Procedure room. *A procedure room with a minimum clear floor area of 400 square feet (37.16 m2) for the procedure room in addition to spaces for control, monitoring and recording equipment, and x-ray power and controls, and a minimum of one scrub sink for each catheterization laboratory. This space does not include the control room.*

1224.28.2.1.1 Emergency response space. *Where electrophysiology studies are performed, dedicated space and equipment for emergency resuscitation and stabilization shall be immediately accessible to the procedure room.*

1224.28.3 Freestanding cardiac catheterization laboratory service space. ...

1224.28.4 Interventional imaging. *Image-guided interventional procedures shall be performed in procedure rooms in compliance with this section. Cardiac catheterization operating rooms shall be in compliance with Section 1224.28.2, and hybrid operating rooms shall be in compliance with Section 1224.28.5.*

1224.28.4.1 Space requirements. *The procedure room shall meet the space, clearance, and storage requirements for the imaging equipment contained in the room and the following:*

1. *A minimum clear dimension of 18 feet (5486 mm).*
2. *The procedure room shall also be sized to allow a minimum clearance of 4 feet (1219 mm) on all sides of the procedure table.*

1224.28.4.2 Pre-procedure and recovery. *Pre-procedure and recovery areas shall be immediately accessible to procedure rooms and separate from corridors. The pre-procedure and recovery areas shall comply with the requirements of Section 1224.16 Anesthesia/recovery Service Space.*

1224.28.4.3 Interventional MRI facilities. *Interventional and intraoperative magnetic resonance imaging (I-MRI) procedure rooms shall comply with Section 1224.28.5 Hybrid Operating Rooms.*

1224.28.4.4 Control room or area. *A control room or area shall be provided.*

1. *The control room or area shall be sized to accommodate the image-recording and viewing equipment.*
2. *A shielded view window permitting direct observation of the patient from the control console shall be provided.*
3. *The shielded control room shall be configured to prevent radiation exposure into occupied areas of the control room when ionizing radiation modalities are used.*
4. *Where the procedure room requires positive (or negative) pressure, a door shall be provided between the control room and the procedure room or between the combined control room/procedure room and other adjacent space.*
5. *Where control functions for ionizing radiation exposures take place in the procedure room, storage for personal radiation protection devices shall be provided.*

1224.28.4.5 Scrub facilities. *Scrub sinks shall be located outside of sterile areas. A minimum of one scrub sink station shall be provided for each interventional imaging procedure room. Scrub sinks shall have water supply controls not requiring direct contact of the hands for operation.*

1224.28.4.6 Medication station. *A medication station shall be provided in compliance with the requirements in Section 1224.4.4.4.*

1224.28.4.7 Reading room. *A reading room for reviewing images shall be available for use by the interventional imaging suite.*

1224.28.4.8 Electrical equipment room. *Electronic equipment or enclosures large enough to contain x-ray transformers, power modules, and associated electronics and electrical gear shall be provided. Sharing of electronics equipment rooms by multiple procedure rooms is permitted.*

1224.28.4.9 Clean utility room. *A clean utility room shall be provided in accordance with the requirements in Section 1224.4.4.6.*

1224.28.4.10 Soiled workroom. *A soiled workroom shall be provided in accordance with Section 1224.4.4.7.*

1224.28.4.11 Housekeeping room. *A housekeeping room shall be provided in accordance with the requirements of Section 1224.4.15.*

1224.28.4.12 Staff changing areas. *Staff changing areas shall be provided and arranged to ensure a traffic pattern so that personnel can enter from outside the suite, change their clothing, and move directly into the semi-restricted corridor within the interventional imaging suite.*

1224.28.5 Hybrid operating room(s). *Hybrid operating rooms shall comply with the requirements of Section 1224.15 and comply with the requirements in this section.*

1224.28.5.1 Space requirements. *Each hybrid operating room shall meet the space, clearance, and storage requirements for the imaging equipment contained in the room and the following:*

1. *A minimum clear floor area of 650 square feet (60.39 m^2) is required for a hybrid operating room unless the imaging equipment requires a larger area.*
2. *The minimum clear dimension shall be 24 feet (7315 mm) unless the requirements for the specific imaging equipment require a greater distance.*
3. *If mobile storage units are used in lieu of fixed cabinets, the minimum clear dimension shall be available between such units when they are parked against a permanent partition.*

1224.28.5.2 Control room. *If required, a control room shall be provided that accommodates the imaging system control equipment and the following requirements:*

1. *The control room shall have a minimum clear floor area of 120 square feet (11.15 m^2), which may include fixed work surfaces.*
2. *The room shall be physically separated from the hybrid operating rooms with walls and a door.*
3. *The room shall have viewing windows that provide for a full view of the patient and the surgical team.*
4. *If the control room is adjacent to a restricted area, it must be physically separated from the restricted area with walls and a door.*

1224.28.5.3 Imaging equipment room. *An imaging equipment room shall be provided for each hybrid operating room.*

1224.28.5.4 Radiation protection. *If the imaging equipment emits ionizing radiation, protection shall be provided in accordance with Section 1224.18.1.1.*

1224.28.5.5 Requirements for specific types of hybrid operating rooms.

1224.28.5.5.1 CT. *Hybrid operating rooms with intraoperative computerized tomography (CT) systems shall have control rooms that comply with Section 1224.18.3.1.*

1224.28.5.5.2 iMRI. *Hybrid operating rooms with intraoperative magnetic resonance imaging (iMRI) systems shall comply with the following:*

1. *Space and configuration requirements in Section 1224.18.4, except the clearances shall meet the requirements of 1224.28.5.1.*
2. *The control room shall comply with Section 1224.18.4, Item 1.*
3. *The anteroom shall comply with Section 1224.18.4.2.*
4. *Entry doors to iMRI hybrid rooms shall swing outward from inside the room.*

1224.28.5.5.3 Vascular imaging. *Hybrid operating rooms with vascular imaging systems shall comply with Section 1224.28.4.4.*

1224.28.5.6 Pre-procedure and recovery. *Pre-procedure and recovery areas shall be immediately accessible to procedure rooms and separate from corridors. The pre-procedure and recovery areas shall comply with the requirements of Section 1224.16 (Anesthesia/recovery Service Space).*

...

1224.28.6 Electroconvulsive Therapy. *If electroconvulsive therapy (ECT) is provided, the requirements of this section shall be met. Where a psychiatric unit is part of a general acute care hospital (Section 1224.31 Psychiatric Nursing Unit), all the requirements in this section shall be permitted to be accommodated in a procedure suite that complies with the requirements in this section or in an operating room in a surgical suite that meets the requirements in Section 1224.15.*

1224.28.6.1 General. *The ECT procedure area may be a single procedure room or a suite of procedure rooms.*

1224.28.6.2 ECT procedure room.

1. *Space requirements. Each ECT procedure room shall have a minimum clear floor area of 200 square feet (18.6 m^2) with a minimum clear dimension of 14 feet (4267 mm)*
2. *Handwashing station. A handwashing station shall be provided.*
3. *Documentation area. Accommodation for written or electronic documentation shall be provided.*

1224.28.6.3 Pre-procedure and recovery area. *When ECT services have a low-volume of procedures, the ECT procedure room may be used for pre-procedure patient care and recovery. If a pre-procedure and recovery areas are provided they shall comply with the requirements of Section 1224.16.*

1224.28.6.4 Emergency equipment storage. *Space shall be provided in the procedure room(s) for storage of emergency equipment such as a CPR cart. A separate emergency equipment storage is permitted to serve more than one ECT procedure room.*

1224.28.6.5 Patient support areas. *A waiting area and changing area shall be provided for outpatient use in perioperative areas in support ECT suites that provide outpatient procedures. The waiting room shall comply with Section 1224.4.5. The changing area shall include space for changing or gowning, provisions for storing patients' belongings during the procedure, and access to patient toilet(s).*

...

1224.29 INTENSIVE CARE UNITS

1224.29.1.7 Handwashing stations ~~fixtures.~~ *Handwashing stations ~~fixtures~~ shall be directly accessible ~~convenient~~ to nurse stations and patient bed areas. There shall be at least one handwashing station ~~fixture~~ for every three beds in open plan areas, and one in each patient room. The handwashing station ~~fixture~~ shall be located near the entrance to the patient cubicle or room.*

1224.29.1.12 Medication station. *A medication station ~~S~~shall be provided in accordance with Section 1224.4.4.4 ~~1224.14.2.8~~.*

1224.29.1.14 Additional service spaces. *The following additional service spaces shall be immediately accessible ~~available~~ within each intensive service space. These may be shared by more than one intensive care unit provided that direct access is available from each.*

...

1224.29.1.14.5 Ice machine. *Each unit ~~There~~ shall ~~be available~~ have equipment to provide ice for treatments and nourishment. Ice-making equipment may be in the clean utility room or at the nourishment station. Ice intended for human consumption shall be from self-dispensing icemakers.*

1224.29.1.15 Support. *The following shall be provided and shall be located immediately ~~adjacent~~ accessible to the unit:*

...

1224.29.2.5 Control station. *A central area shall serve as a control station, and shall have space for counters and storage, and ~~shall have convenient~~ direct access to a handwashing station ~~fixture~~. It may be combined with or include centers for reception, ~~and~~ communication and patient monitoring.*

1224.29.2.10.4 Commercial infant formula. *Where a commercial infant formula is used, omission of the separate cleanup and preparation rooms shall be permitted, and storage and handling in the NICU workroom or another appropriate room that is ~~conveniently~~ readily accessible at all hours shall be permitted. The preparation area shall have the following:*

...

1224.30 PEDIATRIC AND ADOLESCENT UNIT. ...

1224.30.3.2 Infant formula. *Space for preparation and storage of infant formula shall be provided ~~within~~ immediately accessible to the unit ~~or other convenient location~~.*

1224.30.3.3 Toilet rooms. *Patient toilet room(s) with a lavatory in each room, in addition to those serving bed areas, shall be ~~conveniently~~ located adjacent to play area(s) and in or directly accessible to each central bathing facility.*

1224.32 OBSTETRICAL FACILITIES (PERINATAL UNIT SPACE)

1224.32.3.7 Recovery room(s) (LDR or LDRP rooms may be substituted). *Each recovery room shall contain at least two beds and have a nurse ~~control~~ station, with charting facilities, located to permit visual ~~control~~ observation of all beds. Each room shall include a handwashing station ~~fixture~~ and a medication station. A clinical sink with bedpan flushing device shall be directly accessible ~~available~~, as shall storage for supplies and equipment. Provide visual privacy of the new family.*

...

1224.32.3.8.1 Services. ...

...

2. Soiled workroom or soiled holding room. See Section 1224.4.4.7 ~~1224.14.2.7~~.

...

1224.32.3.8.2 Shared services. ...

...

1224.32.3.8.2.2 Waiting room. *This room shall have toilet rooms~~(s)~~, telephone(s) and drinking fountains~~(s)~~ that are immediately accessible ~~conveniently located~~. The toilet rooms~~(s)~~ shall contain a lavatory.*

1224.32.3.8.2.5 Clean utility room. *A clean utility room shall be provided if clean materials are assembled within the obstetrical service space prior to use. If a clean utility room is provided see Section 1224.4.4.6 ~~1224.14.2.6~~.*

1224.32.3.8.2.6 Storage

1. Clean sterile storage area readily accessible ~~available~~ to the delivery room.

1224.32.3.8.2.9 Staff lounge. *Lounge and toilet room facilities for obstetrical staff ~~convenient~~ shall be readily accessible to cesarean operating room(s), delivery room(s), labor room(s) and recovery room(s). Each toilet room shall contain a handwashing station ~~fixtures~~.*

1224.32.5.1 General. *Infants shall be housed in nurseries that comply with the standards below. All nurseries shall be ~~adjacent~~ immediately accessible to the postpartum unit and obstetrical facilities. The nurseries shall be located and arranged to preclude the need for unrelated traffic. No nursery shall open directly onto another nursery. Each nursery shall contain the following:*

...

1224.32.5.1.3 Lactation. *A consultation/demonstration/breast feeding or pump room shall be provided ~~convenient~~ in a location that is readily accessible to the nursery. Provisions shall be made, either within the room or ~~conveniently located nearby~~ immediately accessible to the room, for a sink, counter, refrigeration and freezing, storage for pump and attachments, and educational materials. ~~The~~ This area ~~provided for the unit for these purposes, when conveniently located,~~ may be shared between units.*

1224.33 EMERGENCY SERVICE.

1224.33.1 Definition. *Levels of emergency care range from initial emergency management as Standby Emergency Medical Service, with a Physician on call; to definitive emergency care as Basic Emergency Medical Service, with a Physician on duty; to a Comprehensive Emergency Medical Service as an Emergency Department.*

1224.33.2 Standby ~~e~~Emergency ~~m~~Medical ~~s~~Service. *If provided, initial emergency management shall be provided in a specifically designated area of the hospital which shall include the following elements:*

1224.33.2.1 Exterior entrance. *A well-marked, illuminated and covered entrance at grade level. The emergency vehicle cover shall provide shelter for both the patient and the emergency medical crew during transfer from an emergency vehicle into the building. This exterior entrance shall not be substituted for the required accessible entrance to the hospital, protected from the weather by canopy or roof overhang assigned for passengers loading zone. Ambulance entrances shall provide a minimum of 6 feet (183 mm) in clear width to accommodate bariatric stretchers, mobile patient lift devices, and accompanying attendants. Reception~~, triage and control station~~ shall be located to permit staff observation and control of access to treatment area, pedestrian and ambulance entrances, and public waiting area.*

1224.33.2.2 Treatment room. *Standby emergency service shall include at least one treatment room with the following elements:*

1. *The area shall not be less than 120 square feet (11.15 m^2) of clear floor area, exclusive of toilet room(s), waiting area and storage.*
2. *Each treatment room shall contain an examination light, work counter, and handwashing ~~fixtures~~ station.*
3. *~~m~~Medical equipment, cabinets, medication storage and counter space for writing.*
4. *The dimensions and arrangement of treatment rooms shall be such that there is a minimum of 3 feet (914 mm) between the sides and foot of the bed/gurney and any wall or any other fixed obstruction. The treatment room may have additional space and provisions for several patients with cubicle curtains for privacy.*
5. *Multiple-~~bed~~station treatment rooms shall provide a minimum of 80 square feet (7.43 m^2) per patient gurney, with a minimum 8 foot width (2,438 mm) and 3 feet (914 mm) at the foot of the bed/gurney, with a minimum of 5 feet (1524 mm) between patient gurneys. Patient gurneys shall be separated from adjoining cubicles by curtains. Handwashing fixtures shall be provided for each four treatment stations or major fraction thereof in multiple-station areas.*

Exceptions~~s~~:

~~1.~~ *Where renovation of existing treatment rooms is undertaken in facilities approved under the 2001 or prior California Building Code, existing treatment rooms may be renovated, or replaced in kind one for one in the renovated space. Such treatment rooms shall have no less than 80 square feet (7.43 m^2) of clear floor area, the least dimension of which shall be 8 feet (2438 mm).*

~~2. For shelled spaces approved under the 2001 or prior California Building Code as future emergency service space, treatment rooms, shall have no less than 80 square feet (7.43 m^2) of clear floor area per bed, with a minimum dimension of 8 feet (2438 mm).~~

1224.33.2.3 Storage. *Equipment and supply storage shall be provided and ~~shall~~ be sized for general medical/surgical emergency supplies, medications and equipment such as ventilator, defibrillator, splints, etc. This storage shall be located in an alcove or room, out of corridor or hallway traffic, and under staff control.*

1224.33.2.4 Lobby. *Provisions for reception, control, and public waiting, including a public toilet room(s) with handwashing fixture(s), and public telephone.*

1224.33.2.5 Toilet room(s). *Patient toilet room(s) with handwashing fixture(s) ~~convenient to~~ shall be immediately accessible to the treatment room(s).*

1224.33.2.6 Communication. *~~A c~~Communication ~~hookup~~ connections to the Poison Control Center and local EMS system shall be provided.*

1224.33.2.7 Observation area. *A patient cubicle with a minimum clear floor area of 100 square feet (9.29 m^2) shall be provided under the visual control of an emergency service staff work area. The patient station shall have space at bedside for visitors and shall have provision for visual privacy from casual observation by other patients and visitors. A handwashing station shall be located in each room, and at least one handwashing station shall be provided for every four patient stations, or major fraction thereof, in open-bay areas.*

> ***Exception:*** *For small and rural hospitals, the observation area need not be dedicated solely for that purpose.*

1224.33.2.~~7~~8 Airborne infection isolation exam/treatment room. *If provided, the airborne infection isolation exam/treatment room ~~S~~ shall comply with the requirements of Section ~~1224.29.1.13~~ 1224.4.4.1.3 ~~except for separate toilet room, bathtubs, or shower~~.*

1224.33.3 Basic e~~E~~mergency ~~m~~Medical ~~s~~Service. *When 24-hour basic emergency service is to be provided, at a minimum, all the provisions of Standby Emergency Service under Section 1224.33.2 and the following shall be provided:*

1224.33.3.1 Exterior entrance. *In addition to the requirements of Section 1224.33.2.1, ~~Grade-level well marked, illuminated, and covered entrance with~~ the emergency entrance shall have direct access from public roads for ambulance and vehicle traffic conforming with the requirements of the local authorities having jurisdiction. Entrance and driveway shall be clearly marked. If a raised platform is used for ambulance discharge, provide a ramp for pedestrian and wheelchair access.*

1224.33.3.2 Patient access. *Paved emergency access shall be provided to permit discharge of patients from automobiles and ambulances, and temporary parking convenient to the entrance.*

1224.33.3.3 Reception, triage, and control station(s). *This area shall be located to permit staff observation and control of access to treatment areas, pedestrian and ambulance entrances, and public waiting area.*

1224.33.3.4 Wheelchair and gurney storage. *Storage for wheelchairs and gurneys for arriving patients ~~S~~shall be located out of circulation paths with ~~convenient~~ access ~~from~~ to emergency entrances.*

1224.33.3.5 Public waiting area. ~~with toilet room facilities, drinking fountains, and telephone.~~ *A public waiting area shall be provided in compliance with Section 1224.4.5 and include provision of public toilet room(s), drinking fountains, and telephone adjacent to the waiting area, dedicated to, and within, the Emergency Service Space.*

1224.33.3.6 Examination and ~~or~~ treatment room(s). *Examination and treatment rooms shall meet the requirements under Section 1224.33.2.2. ~~Shall have a minimum clear floor area of 120 square feet (11.15.m^2). The room shall contain work counter(s); cabinets; handwashing fixtures; and a vision panel adjacent to and/or in the door. The dimensions and arrangement of examination and treatment rooms shall be such that there is a minimum of 3 feet (914 mm) between the sides and foot of the bed/gurney and any wall or any other fixed obstruction. When treatment cubicles are in open multi-bed areas, each cubicle shall have a minimum of 80 square feet (7.43 m^2) of clear space with a minimum 8 foot (2438 mm) width and 3 feet (914 mm) at the foot of the bed, with a minimum of 5 feet (1524 mm) between patient gurneys, and shall be separated from adjoining cubicles by curtains. Handwashing fixtures shall be provided for each four treatment cubicles or major fraction thereof in multiple bed areas.~~*

~~Exceptions:~~

~~1. Where renovation of existing examination or treatment room(s) is undertaken in facilities approved under the 2001 or prior California Building Code, existing examination or treatment rooms may be renovated, or replaced, in kind one for one in the renovated space. Such examination or treatment rooms shall have no less than 80 square feet (7.43 m^2) of clear floor area, the least dimension of which shall be 8 feet (2438 mm).~~

~~2. For shelled spaces approved under the 2001 or prior California Building Code as future Emergency Service space, examination or treatment room(s) shall have no less than 80 square feet (7.43 m^2) of clear area, the least dimension of which shall be 8 feet (2438 mm).~~

1224.33.3.7 Trauma/cardiac rooms. *These rooms are for emergency procedures, including emergency surgery, and shall have at least 250 square feet (23.23 m^2) of clear floor space. A minimum clearance of 5 feet (152 mm) shall be provided around all sides of the procedure table or gurney. Each room shall have cabinets and emergency supply shelves, image viewing capability, examination lights, and counter space for writing. Additional space with cubicle curtains for privacy may be provided to accommodate more than one patient at a time in the trauma room with a minimum clear floor area of 200 square feet (18.58 m^2) for each patient bay defined by the privacy curtains. There shall be storage provided for immediate access to attire used for universal precautions. Doors leading from the ambulance entrance to the cardiac trauma room shall have an opening with a minimum width of 5 feet (1524 mm). At least one scrub sink shall be located outside the entrance to each trauma room. One scrub station consisting of two scrub positions is permitted to serve two trauma rooms if located adjacent to the entrance of each procedure room. The placement of scrub sinks shall not restrict the minimum required corridor width.*

1224.33.3.8 Orthopedic and cast work. *~~Provisions may be made in separate room(s) or in the trauma room.~~ At least one orthopedic or cast room shall be provided within the emergency service space. ~~They~~ Provisions shall include storage for splints and other orthopedic supplies, traction hooks, image viewing capability, and examination lights. If a sink is used for the disposal of plaster of paris, a plaster trap shall be provided. The clear floor space for this area shall be a minimum of 180 square feet (16.7 m^2).*

1224.33.3.9 Poison Control and EMS communications center. *Communication connections shall be provided as required under Section 1224.33.2.6. The communications center ~~M~~may be a*

part of the staff work and charting area.

1224.33.3.10 Emergency equipment storage space. *Equipment and supply storage shall be provided as required under Section 1224.33.2.3.*

1224.33.3.11 Patients' toilet rooms. *A patient toilet room with a lavatory shall be immediately accessible to the treatment room(s). Where there are more than eight treatment stations areas, a minimum of two toilet rooms, with a lavatory in each toilet room, shall be required.*

1224.33.3.12 Storage. *Provide rooms for clean, soiled or used supplies.*

> ***1224.33.3.12.1 Soiled workroom or soiled holding.*** *See Section 1224.4.4.7 14.2.7. This room is for the exclusive use of the emergency service space.*
>
> ***1224.33.3.12.2 Clean utility room.*** *See Section 1224.4.4.6 14.2.6.*

1224.33.3.13 Administrative center or nurses' station for staff work and charting. *These areas shall have space for counters, cabinets, and medication storage, and shall have convenient access to be provided with handwashing fixtures stations. They may be combined with or include centers for reception and communication.*

1224.33.3.14 Staff lounge. *A staff lounge shall be located within the Emergency Department and include staff clothing change areas with lockers, showers, toilets and handwashing stations for male and female staff.*

1224.33.3.15 Housekeeping room. *A housekeeping room, compliant with Section 1224.4.15, shall be located within the unit and dedicated to the emergency service space directly accessible from the unit.*

1224.33.3.16 Airborne infection isolation exam/treatment room. *If provided shall comply with the requirements of Section 1224.29.1.13 1224.4.4.1.3 except for separate toilet room, bathtubs or shower.*

1224.33.3.17 Secured holding room. *If provided, shall have at least one holding/seclusion room of 120 square feet (11.15 m^2). This room shall allow for security, patient and staff safety, patient observation and sound proofing. When a secure holding room is provided, it shall meet the following requirements. The location of the secure holding room(s) shall facilitate staff observation and monitoring of patients in these areas. The secure holding room shall have a minimum clear floor area of 60 square feet (5.57 square meters) with a minimum wall length of 7 feet (2.13 meters) and a maximum wall length of 11 feet (3.35 meters). This room shall be designed to prevent injury to patients:*

1. *All finishes, light fixtures, vents, diffusers, and fire protection/alarm components shall be tamper resistant and ligature resistant.*
2. *There shall not be any electrical outlets, medical gas outlets, or similar devices.*
3. *There shall be no sharp corners, edges, or protrusions, and the walls shall be free of objects or accessories of any kind.*
4. *Patient room doors shall swing out and shall have hardware on the exterior side of the door only. The minimum width shall be 44 inches (1120 mm).*
5. *A small impact-resistant view panel or window shall be provided in the door for discreet staff observation of the patient.*

1224.33.4 Comprehensive Emergency Medical Service. *When 24-hour comprehensive emergency service is to be provided, an Emergency Department shall be provided. At a minimum, all the provisions of Stand-by Emergency Service under Section 1224.33.2, the provisions of Basic Emergency Service under Section 1224.33.3, and all of the following shall be provided:*

1224.33.4.1 Triage stations. *In addition to the requirements of Section 1224.33.3.3, the triage area shall include triage station(s) with the following minimum requirements:*

1. *100 square feet (9.29 m^2) minimum clear floor area for each private triage room and 80 square feet (7.4 m^2) minimum clear floor area for each station in open-bay triage areas.*
2. *Provisions for patient privacy.*
3. *Handwashing station in each triage room. In open-bay triage areas, one handwashing station shall be provided for every four triage stations.*
4. *Immediate access to emergency call and code call stations.*
5. *Medical gas outlets for triage areas in compliance with Table 1224.4.6.1.*

1224.33.4.2 Fast-track area. *A fast-track area may be used for treating patients presenting simple and less serious conditions. If a fast-track area is provided, it shall meet the following requirements:*

1. *Space requirements – each fast-track station shall have a minimum 100 square feet (9.29 m^2) of clear floor area.*
2. *Each station shall include a handwashing station, work/documentation counter, examination table light.*
3. *Storage areas for supplies and medication.*
4. *A separate procedure room may be provided. It shall have a minimum clear floor area of 120 square feet (11.15 m^2).*

1224.33.4.3 Pre-screening stations. *A pre-screening area may be used prior to admission to the Emergency Department. If pre-screening is provided, each station must have a minimum of 80 square feet (7.4 m^2) of clear floor area, a handwashing station, documentation counter, and a storage cabinet. Pre-screening stations, whether private rooms or open bays, are considered a part of the waiting area and must meet the same ventilation requirements.*

1224.33.4.4 Diagnostic service areas. *Radiological/Imaging services shall be readily accessible. The Emergency Department shall be supported by Clinical Laboratory services. A STAT lab may be provided within the emergency medical service space in addition to more comprehensive support provided by the Clinical Lab.*

1224.33.4.5 On-call room(s). *Provisions shall be made to accommodate on-call sleeping room(s) for physicians and/or medical staff within the Emergency Department.*

1224.33.4.6 Police and press room. *Provisions shall be made to accommodate police briefing/debriefing and press releases. This may be located outside the Emergency Department.*

1224.33.5 ***~~1224.33.4~~ Other space considerations.***

1224.33.4-5.1 Observation units. *Observation rooms for the monitoring of patients up to 24 hours may be provided as a distinct unit within, the emergency department. If provided the unit shall have the following:*

1. *Handwashing ~~fixtures~~ stations shall be provided in each patient room or for each four treatment ~~cubicles~~ stations, or major fraction thereof. Handwashing ~~fixtures~~ stations shall be ~~convenient~~ directly accessible to nurse stations and patient ~~bed~~ care areas.*
2. *Each patient ~~bed area~~ station shall have a minimum of 120 square feet (11.15 m^2) of clear floor area including space at each bedside for visitors and provision for visual privacy from casual observation by other patients and visitors.*
3. *One toilet room shall be provided for each ~~eight~~ six treatment ~~cubicles~~ stations, or major fraction thereof.*
4. *An administrative center/nurse station, in compliance with Section 1224.4.4.2, positioned to allow staff to observe each patient care station or room.*

5. A nourishment area in compliance with Section 1224.4.4.5. ~~sink, work counter, refrigerator, storage cabinets.~~

1224.34 NUCLEAR MEDICINE

1224.34.1 General. *If nuclear medicine is provided, the following shall be provided:*

1224.34.1.1 Radiation Protection. ...

1224.34.1.2 Nuclear medicine room. Shall be s~~S~~ized to accommodate the equipment and a gurney. ~~Provide a handwashing fixture.~~

When provided, the following facilities shall meet the requirements below:

1224.34.1.2.1 Scintigraphy (Gamma Camera) Facilities. Shall include the following:

1. Scanner room. The scanner room shall provide a minimum clearance of 4 feet (1218 mm).at each side and the foot of the table.
2. Handwashing stations shall be provided throughout the gamma camera suite at locations of patient contact and at locations where radiopharmaceutical materials are handled, prepared, or disposed of.

1224.34.1.2.2 Positron Emission Tomography (PET). Shall include the following:

1. Scanner room shall provide a minimum clearance of 4 feet (1218 mm) at each side and the foot of the table. Additional space shall be provided when PET is combined with CT, and include compliance with Section 1224.18.3 and shielding requirements in Section 1224.34.1.1.
2. Cyclotron room. Where radiopharmaceuticals are prepared on-site, a cyclotron shall be provided. Cyclotron facilities shall be located in access-restricted areas. Shielding requirements for cyclotron facilities shall comply with Section 1224.34.1.1.
3. Control room. A control room shall be provided with a full direct view of the patient in the PET scanner.
4. Patient uptake/cool-down room. A shielded room with access to a dedicated patient toilet, to accommodate radioactive waste, and lavatory shall be provided.
5. Handwashing stations shall be provided throughout the PET suite at locations of patient contact and at locations where radiopharmaceutical materials are handled, prepared, or disposed of.
6. Pre-procedure patient care and recovery area shall be provided to accommodate at least two stretchers. This area shall comply with Section 1224.34.2.6.
7. Computer equipment room shall be provided in support of the equipment provided.
8. Contaminated (hot) soiled holding shall be provided and operationally integrated to minimize incidental exposure to ionizing radiation.

1224.34.1.2.3 Single-Photon Emission Computed Tomography (SPECT) Facilities. When provided shall include the following:

1. Scanner room. Scanner room shall provide a minimum clearance of 4 feet (1218 mm) at each side and the foot of the table.
2. Control room. A control room shall be provided with a full direct view of the patient in the SPECT scanner.
3. Computer equipment room shall be provided in support of the equipment provided.
4. Handwashing stations shall be provided throughout the SPECT suite at locations of patient contact and at locations where radiopharmaceutical materials are handled, prepared, or disposed.

...

1224.34.2 Support areas for nuclear medicine services. *...*

1224.34.2.2 Cleanup. *Provisions for cleanup shall be located within the service space and be readily accessible ~~for convenient access and use~~. ~~It~~ They shall include a service sink or floor receptacle as well as storage space for equipment and supplies.*

...

1224.34.2.5 Dose administration area. *Provide ~~and locate near~~ a dose administration area that is immediately accessible to the preparation area. Since as much as several hours may elapse for the dose to take effect, the area shall provide visual privacy from other areas.*

1224.34.2.6 Pre-procedure/Holding area. *A pre-procedure/holding area for patients on gurneys or beds shall be provided out of traffic and under control of staff and may be combined with the dose administration area with visual privacy between the areas.*

1224.34.2.7 Patient dressing rooms. *~~Located convenient~~ Patient dressing rooms shall be immediately accessible to the waiting area and procedure rooms. Each dressing room shall include a seat or bench, a mirror, and provisions for hanging patients' clothing and for securing valuables.*

1224.34.2.8 Patient toilet room(s). *Patient toilet rooms shall be ~~R~~reserved for nuclear medicine patients and shall be ~~located convenient~~ directly accessible to the nuclear medicine laboratory.*

1224.34.2.9 Staff toilet rooms~~(s)~~. *Staff toilet rooms ~~S~~shall be ~~located convenient~~ readily accessible to the nuclear medicine laboratory.*

...

1224.34.2.14 Hot lab for scintigraphy (gamma camera), PET, and SPECT facilities. *A securable area or room shall be provided in which radiopharmaceuticals can be safely stored and doses can be calculated and prepared.*

1. *A single hot lab shall be permitted to serve multiple scanners and nuclear medicine modalities.*
2. *The hot lab shall be shielded in compliance with Section 1224.34.1.1.*
3. *A source storage area, a dose area, and a storage area for syringe shields shall be provided.*

1224.34.3 Radiotherapy service space.

1224.34.3.1 Radiation therapy space. *If radiation therapy is provided, the following shall be accommodated:*

...

5. *Direct access to ~~or~~ space provided for radiation measurement and calibration equipment, including a calibration constancy instrument and access to a secondary standard dose meter.*

   ...

   5.3 *Direct access to ~~or~~ space provided for brachytherapy equipment which shall meet the requirements of Chapter 31C and the California Radiation Control Regulations, California Code of Regulations, Title 17, Division 1, Chapter 5, Subchapter 4.*

...

1224.34.3.3 Room sizes. *Rooms shall be sized as follows:*

1. *Cobalt rooms and linear accelerators shall be sized in accordance with equipment requirements and shall accommodate a gurney for litter borne patients. Layout shall provide for preventing the escape of radioactive particles. Openings into the room, including doors, ductwork, vents and electrical raceways and conduits, shall be baffled to prevent direct exposure to other areas of the facility.*
2. *Simulator, accelerator and cobalt rooms shall be sized to accommodate the equipment*

with patient access on a gurney, medical staff access to the equipment and patient, and service access.

3. *Where a table is used, the room shall be sized to provide a minimum clearance of 4 feet (1218 mm) on three sides of the table to facilitate bed transfer and provide access to the patient. The door swing shall not encroach on the equipment space, patient circulation space, or transfer space.*
4. *Minimum room size shall be 260 square feet (24.15 m^2) for the simulator room; 680 square feet (63.17 m^2), including the maze, for accelerator rooms; 200 square feet (18.58 m^2) for brachytherapy rooms; and 450 square feet (41.81 m^2) for cobalt rooms.*

1224.34.3.4 General support area. *...*

1. *A gurney hold area ...*
2. *Exam or treatment room ...*

   Exceptions:

   1. ...

   2. ...
3. *Darkroom is optional. If provided, shall be ~~convenient~~ readily accessible to the treatment room(s).*
4. *Patient gowning ...*
5. *Film files area ...*

...

1224.34.5 Additional support areas for cobalt room.

...

1224.34.5.1 *~~Hot lab.~~* ***Hot lab.*** *A hot lab shall be provided in accordance with Section1224.34.2.14.*

1224.34.6 *~~High dose rate brachytherapy room.~~* ***Radiosurgery suite.*** *If radiosurgery (gamma knife/cyber knife) is provided, the following shall be provided:*

1224.34.6.1 General. *The radiosurgery suite shall be located near the imaging services suite to facilitate image acquisition prior to radiosurgery treatment. Location of gamma knife or cyber knife treatment rooms in a radiation therapy suite shall be permitted.*

1224.34.6.2 Radiosurgery treatment rooms. *Radiosurgery (gamma knife/cyber knife) treatment rooms shall provide a minimum clearance of 4 feet (1218 mm) shall be provided on all sides of the treatment table/chair. The door shall not encroach on the equipment or on patient circulation or transfer space. A handwashing station shall be provided in each radiosurgery treatment room.*

1224.34.6.3 Pre-procedure/recovery accommodations. *If provided, pre-procedure/recovery patient care stations shall meet the following requirements:*

1. *Pre-procedure and recovery area(s) shall be immediately accessible to procedure rooms and separate from corridors. The pre-procedure and recovery patient area or room shall be arranged to permit visual observation of the patient by staff before and after the procedure. Bays, cubicles, or single-bed rooms shall be permitted to serve as patient care stations.*
2. *Area. Where open bays are used, each patient care station shall have a minimum clear floor area of 80 square feet (7.43 m^2).*
3. *Clearances. Each bay or cubicle shall have a minimum clearance of 3 feet (914 mm) between walls or partitions and the sides and foot of gurneys or patient beds. Each bay shall have a minimum clearance of 4 feet (1218 mm) between sides of gurneys or patient beds.*
4. *Patient privacy. Provisions such as cubicle curtains shall be provided for patient privacy.*

5. Handwashing station. A handwashing station shall be provided within the pre-procedure/recovery area.

1224.34.6.4 Support areas for radiosurgery treatment rooms. The following shall be provided:

1. Space for sterilization of head-frames.
2. Area for target planning.
3. Medication station.
4. Nourishment area.
5. Head-frame storage.
6. Toilet room(s) for patients, staff and the public.
7. Area for sedation of pediatric patients.

...

1224.36 RENAL DIALYSIS SERVICE SPACE (ACUTE AND CHRONIC)

1224.36.2.4 Handwashing stations ~~fixtures~~. Handwashing stations ~~S~~shall be ~~located convenient~~ directly accessible to the nurses' station and to patient treatment areas. ~~There shall be at least one h~~Handwashing stations ~~fixture~~ shall serve~~ing~~ no more than four patient stations. These shall be uniformly distributed to provide equal access from each patient station.

1224.36.2.14 Housekeeping room. Provide ~~adjacent~~ a housekeeping room that is immediately accessible to, and for the exclusive use of, the unit.

...

1224.39 OUTPATIENT SERVICE SPACE.

...

1224.39.2 Outpatient surgery. ...

...

2. Preoperative patient holding shall be provided in accordance with Section 1224.16.2 ~~1224.15.2~~.

1224.39.3 Gastrointestinal endoscopy. ...

...

1224.39.3.1.2 Handwashing station ~~fixture~~. A separate dedicated handwashing station with hands-free controls shall be ~~available~~ provided in the procedure room.

1224.39.3.3 Pre-operative patient holding. A pre-operative patient holding area shall be provided in accordance with Section 1224.16.2 ~~1224.15.2~~.

1224.39.3.4 Post-anesthesia recovery area. A post-anesthesia recovery area shall meet the requirements of Section 1224.16.3.

1224.39.4 CANCER TREATMENT/INFUSION THERAPY SERVICE SPACE.

...

1224.39.4.2.4 Handwashing stations ~~fixtures~~. **Handwashing stations** ~~S~~shall be ~~located convenient~~ directly accessible to the nurses' station and patient treatment areas. There shall be at least one handwashing station ~~fixture~~ to serve~~ing~~ no more than four patient stations. These shall be uniformly distributed to provide equal access from each patient station.

1224.39.4.2.11 Housekeeping room. Provide a housekeeping room that is immediately accessible ~~Adjacent~~ to and for the exclusive use of the unit.

1224.39.4.3.1 Staff lounge, lockers and toilets~~(s)~~. Space shall be available for male and female personnel for staff clothing change area and lounge. The areas shall contain lockers, toilets~~(s)~~, and handwashing stations ~~fixtures~~.

...

1224.39.5 HYPERBARIC THERAPY SERVICE SPACE.

1224.39.5.1 General. *If provided, clinical hyperbaric oxygen therapy service space shall meet the requirements of the "Hyperbaric Facilities" chapter in NFPA 99: Health Care Facilities Code and shall comply with the following:*

1244.39.5.2 Hyperbaric chambers.

1224.39.5.2.1 Class A chamber (multi-place facilities).

1. ***Clearances.*** *There shall be a minimum clearance of 3 feet (914 mm) around the chamber. The area in front of the chamber entry designed for gurney or bed access shall have a minimum clearance of 8 feet (2438 mm) for gurney or bed approach The area in front of the chamber entry designed for ambulatory or wheelchair access only shall have a minimum clearance of 5 feet (1524 mm) for wheelchair approach.*
2. ***Entries.*** *Chamber entries shall be provided with access ramps that are flush with the chamber entry doorway. Chamber entries not designed for gurney/bed access shall be a minimum of 3 feet (914 mm).*

1224.39.5.2.2 Class B chamber. *(mono-place facilities)*

1. ***Clearances.*** *There shall be a minimum clearance of 3 feet (914 mm) around the chamber. A minimum clearance of 44 inches (1118 mm) shall be provided between the control sides of two chambers. The area in front of the chamber entry shall be designed for gurney or bed access with a minimum clearance of 8 feet (2438 mm) for gurney or bed approach.*
2. ***Oxygen.*** *An oxygen service valve shall be provided for each chamber.*

1224.39.5.3 Pre-procedure patient holding area(s). *In facilities with a Class A hyperbaric chamber or with three or more Class B chambers, a pre-procedure/patient holding area shall be provided to accommodate patients on gurneys or beds and sitting space for ambulatory patients. The area shall permit visual observation of the patient by nursing staff and be located out of traffic flow. Each gurney station shall be a minimum clear floor area of 80 square feet (7.43 m^2) and shall have a minimum clearance of 3 feet (914 mm) on the sides of the gurneys and the foot of the gurney. There shall be provisions for privacy such as cubicle curtains.*

1224.39.5.4 Medical gas station outlets. *Refer to Table 1224.4.6.1 Station Outlets for Oxygen, Vacuum (Suction) and Medical Air.*

1224.39.5.5 Support areas for the hyperbaric suite.

1224.39.5.5.1 Reception/control desk. *An administrative center/nurse station shall be provided within the hyperbaric suite.*

1224.39.5.5.2 Examination/treatment room(s). *Room(s) for individual consultation and treatment shall be provided and meet the requirements of Section 1224.4.4.1.*

1224.39.5.5.3 Clean linen storage. *A clean linen storage area shall be provided This may be within the clean utility room, a separate closet or an approved distribution system. If a closed cart system is used, storage may be in an alcove. It must be out of the path of normal traffic and under staff control.*

1224.39.5.5.4 Clean supply room. *A clean supply room shall be provided and meet the requirements of Section 1224.4.4.6.1. This room may be omitted if the suite is served by a cart system.*

1224.39.5.5.5 Gas cylinder room. *The gas cylinder room shall provide space to house eight (H) cylinders and two gas manifolds, consisting of at least two (H) cylinders on each manifold.*

1224.39.5.5.6 Gurney and wheelchair storage. *Space for gurney and wheelchair storage shall be provided.*

1224.39.5.5.7 Housekeeping room. *A housekeeping room shall be provided and shall be immediately accessible to the hyperbaric suite.*

1224.39.5.5.8 Compressor room. *A compressor room shall be provided to house the chamber compressors, accumulator tanks and fire suppression system.*

1224.39.5.6 Support areas for staff. *Toilet rooms with a handwashing stations shall be immediately accessible to the hyperbaric suite for staff use.*

1224.39.5.7 Support areas for patients.

1224.39.5.7.1 Patient waiting area. *The patient waiting area shall be provided and meet the requirements of Section 1224.39.1.*

1224.39.5.7.2 Patient changing areas. *Changing area(s) for outpatients shall be provided for patient clothing and for securing valuables.*

1224.39.5.7.3 Patient toilet room. *A patient toilet room with a handwashing station shall be directly accessible to the hyperbaric suite.*

NOTATION:
Authority: Health and Safety Code Sections 1226, 1275, 18928, 18949.3, 129790 and 129850; Government 11152.5
Reference: Health and Safety Code Section 129850

SECTION 1225 [OSHPD 2]
SKILLED NURSING AND INTERMEDIATE-CARE FACILITIES

Relocate and amend *Section 3424* to *Section 1225.2.1.*

1225.2. Application. *New buildings and additions ...*

~~3424.1~~ 1225.2.1. Services/systems and utilities. *Services/systems and utilities that are necessary to the operation of a skilled nursing facility or intermediate care facility shall meet the requirements of this section. Examples of services/systems and utilities include but are not limited to normal power; emergency power; nurse call; fire alarm; communication and data systems; space-heating systems; process load systems; cooling systems; domestic hot and cold water systems; means of egress systems; fire-suppression systems; building drain and sewer systems; and medical gas systems that support licensed services.*

~~***Exception:*** *Remodel projects that use available existing services/systems and utilities are exempted from the requirements of this section. The enforcing agency may exempt minor addition, minor alteration, and minor remodel projects and projects to upgrade existing services/systems and utilities from the requirements of this section.*~~

~~***3424.1.1*** *Services/systems and utilities for skilled nursing facilities and intermediate care facilities.*~~

~~3424.1.1.1~~ 1225.2.1.1. New buildings, ~~and~~ additions, alterations and remodels. *Services/systems and utilities for new buildings, ~~and~~ additions, alterations and remodels shall ~~not~~ only originate in, ~~or~~ pass through or under ~~nonconforming~~ structures~~. The structures must be~~ which are under the jurisdiction of the Office of Statewide Health Planning and Development (OSHPD).*

~~**Exception:** As an alternate to this section, skilled nursing and intermediate care facilities may meet the requirements in Section 3416A.1.1.1 for hospital buildings.~~

~~**3424.1.1.2 Alterations and remodels.** Services/systems and utilities for alterations or remodels of existing buildings may pass through nonconforming structures provided that the structure is under the jurisdiction of OSHPD, and the new services/systems and utilities passing through the buildings are anchored and braced for seismic forces in accordance with these regulations for new buildings and are free of adverse seismic interactions caused by potential failure of overhead or adjacent components.~~

~~3424.2~~ 1225.2.2 Means of egress for single-story wood frame or light-steel frame skilled nursing facilities and intermediate care facilities. *Means of egress for single-story wood frame or light-steel frame skilled nursing facilities and intermediate care facilities ~~shall comply with the requirements of Sections 3424.2.1 and 3424.2.2~~. ~~**3424.2.2 Jurisdiction.** Means of egress for skilled nursing facilities and intermediate care facilities~~ shall only pass through buildings that are under the jurisdiction of the Office of Statewide Health Planning and Development (OSHPD).*

~~**3424.2.1 New facilities or additions to existing facilities.** Means of egress for new skilled nursing facilities or intermediate care facilities, or additions to existing skilled nursing facilities or intermediate care facilities shall only pass through conforming buildings.~~

~~**Exception:** As an alternate, the nursing facilities and intermediate care facilities may meet the egress requirements in Sections 3417A.1.1.1.1 through 3417A.1.1.1.5 for hospital buildings.~~

...

1225.4 COMMON ELEMENTS.

...

1225.4.2.2.5 Ice-making facilities. *Ice-making facilities may be located in the food preparation area or in a separate room. They shall be easily cleanable and ~~convenient~~ immediately accessible to the dietary function.*

1225.4.2.2.6 Assembly and distribution. *A patient tray assembly area shall be provided and shall be ~~located within close proximity~~ immediately accessible to the food preparation and distribution areas.*

1225.4.2.2.7 Ware-washing facilities. *...*

3. ~~Convenient h~~Handwashing stations shall be provided in the ware-washing space.

1225.4.2.2.11 Toilet rooms. *Toilet rooms shall be provided for the exclusive use of the dietary staff. They shall not open directly into the food preparation areas, but shall be readily accessible ~~in close proximity~~.*

1225.4.5.2.5 Location. *All storage spaces shall be ~~directly~~ readily accessible ~~on the site of~~ in the licensed facility.*

1225.5 SKILLED NURSING UNIT MODELS. *...*

1225.5.1 MEDICAL MODEL.

1225.5.1.1 General construction. *...*

1225.5.1.2 NURSING SERVICE SPACE.

1225.5.1.2.1 Patient bedrooms. *...*

1225.5.1.2.2 Bed clearance. *The dimensions and arrangement shall be such that there is ~~A~~a minimum distance of 3 feet (914 mm) ~~shall be provided~~ between*

the sides and foot of the beds and any wall or any other fixed obstruction. In multiple-bed rooms, in addition to the above, a minimum clearance of 3 feet (914 mm) shall be provided between beds and a clearance of 4 feet (1219 mm) shall be available at ~~between~~ the foot of each beds ~~and walls or fixed objects~~ to permit the passage of equipment and beds., ~~in multi-patient rooms, and 3 feet (914 mm) in single-patient rooms.~~

1225.5.2 HOUSEHOLD MODEL

1225.5.2.6.3 Staff toilet rooms. *Staff toilet rooms shall be ~~provided conveniently located~~ readily accessible to each resident unit.*

NOTATION:
Authority: Health and Safety Code Sections 1275, 18928, 18949.3and 129850; Government 11152.5
Reference: Health and Safety Code Section 129850

SECTION 1226 [OSHPD 3]
CLINICS

1226.4 General construction. ...

1226.4.9.3 Waste holding room. ...

The waste holding room shall comply with the following:

1. *The waste holding room shall be a minimum of ...*
2. *The waste holding room shall have 100 percent ...*
3. *All finishes in the waste holding room ...*
4. *The waste holding room shall ~~have convenient~~ be immediately accessible to an exterior door.*

1226.4.13.1 Administrative center(s) or nurse stations(s). *This area shall have space for counters and storage and shall have ~~convenient~~ direct access to a handwashing station ~~fixtures~~ (refer to Section 1224.3 for definition of handwashing station ~~fixture~~). It may be combined with or include centers for reception, charting and communication.*

1226.4.13.2.1 Medicine preparation room or area. ...

...

4. ~~Convenient~~ Immediate access to handwashing station ~~fixture~~.

1226.4.13.2.2 Self-contained medicine-dispensing unit. *When provided, the location of a self-contained medicine-dispensing unit shall be permitted in the clean workroom or at the administrative center or nurses' station, provided there is adequate security for medications and adequate lighting to easily identify drugs. ~~Convenient~~ Immediate access to a handwashing station ~~fixture~~ shall be provided.*

1226.4.17.2 Storage for employees. *Provide storage for staff personal effects with locking drawers or cabinets (may be individual desks or cabinets). Such storage shall be ~~convenient~~ readily accessible to individual workstations and shall be staff controlled.*

1226.5 OUTPATIENT CLINICAL SERVICES OF A HOSPITAL.

...

1226.5.5.1.2 Outpatient change area. *A separate space shall be provided where outpatients change from street clothing. This shall include provisions for clothing storage, space for clothing change and gowning area. Dressing rooms shall be ~~provided convenient~~ readily accessible to the imaging rooms.*

1226.5.6 X-ray examination services. ...

...

3. *Fluoroscopy room, when provided, shall have a toilet room ~~adjoining~~ directly accessible to the ~~each~~ fluoroscopy room~~,~~. This toilet room is in addition to ~~other~~ common patient toilet room facilities located ~~adjacent to or in the immediate vicinity~~ in the radiological/imaging service space.*

...

HYPERBARIC THERAPY

1226.5.14 Hyperbaric therapy service space. *When provided, hyperbaric therapy service space shall comply with Section 1224.39.5 and the provisions of this section:*

1226.5.14.1 General. *Refer to Section 1224.39.5.1.*

1226.5.14.2 Hyperbaric chambers. *Refer to Section 1224.39.5.2.*

1226.5.14.3 Pre-procedure patient holding area(s). *Refer to Section 1224.39.5.3.*

1226.5.14.4 Medical gas station outlets. *Refer to Section 1224.39.5.4.*

1226.5.14.5 Support areas for the hyperbaric suite.

1226.5.14.5.1 Reception/control desk. *Refer to Section 1224.39.5.5.1.*

1226.5.14.5.2 Examination/treatment room(s). *Refer to Section 1224.39.5.5.2.*

1226.5.14.5.3 Clean linen storage. *Refer to Section 1224.39.5.5.3.*

1226.5.14.5.4 Clean supply room. *Refer to Section 1224.39.5.5.4.*

1226.5.14.5.5 Gas cylinder room. *Refer to Section 1224.39.5.5.5*

1226.5.14.5.6 Gurney and wheelchair storage. *Refer to Section 1224.39.5.5.6.*

1226.5.14.5.7 Housekeeping room. *Refer to Section 1224.39.5.5.7.*

1226.5.14.5.8 Compressor room. *Refer to Section 1224.39.5.5.8.*

1226.5.14.6 Support areas for staff. *Refer to Section 1224.39.5.6.*

1226.5.14.7 Support areas for patients.

1226.5.14.7.1 Patient waiting area. *Refer to Section 1224.39.5.7.1.*

12265.14.7.2 Patient changing area. *Refer to Section 1224.39.5.7.2.*

1226.5.14.7.3 Patient toilet room. *Refer to Section 1224.39.5.7.3.*

...

PRIMARY CARE CLINICS

1226.6 PRIMARY CARE CLINICS. *Primary care clinics and outpatient clinical services of a hospital providing services equivalent to a primary care clinic shall comply with Sections 1226.4.3 through 1226.4.8 and the provisions of this section.*

1226.6.1 Examination and treatment areas.

1226.6.1.1 Examination room(s). *Refer to Section 1224.4.4.1.*

1226.6.1.2 Treatment room(s). *Treatment room(s) for minor procedures (e.g. surgical procedures, casting), if provided, shall have a minimum area of 120 square feet (11.15 m^2), the*

least dimension of which shall be a minimum of 10 feet (3048 mm), excluding such spaces such as vestibules and work counters, and shall meet the requirements in Section 1224.4.4.1.

1226.6.1.3 Dental examination and treatment areas. *When provided, the examination and treatment space shall be permitted to be a room or a patient care station in an open treatment area.*

1226.6.1.3.1 Area. *The treatment space shall have a minimum clear floor area of 80 square feet (7.4 m^2). This space is required for each station in an open operatory or treatment area. A minimum of 3 feet (915 mm) clearance shall be provided along the full length of one side of the chair, the head of the chair, and between the cuspidor and the head of the chair on the other side for assisting dental staff.*

1226.6.1.3.2 Pediatric patients. *At least one private consultation/treatment room shall be provided when pediatric patients are treated in a facility.*

1226.6.1.3.3 Handwashing. *Each treatment room shall include a handwashing station. If treatment is provided at stations in an open operatory, a handwashing station may be permitted to serve two treatment stations.*

1226.6.1.3.4 Imaging. *If provided, space for a dental panographic x-ray system and printer shall also comply with shielding requirements in Section 1226.5.5.2 and alcove requirements in Section 1224.18.1.1.*

1226.6.1.4 Oral surgery. *When provided, treatment areas for procedures for which general anesthesia is used, shall comply with the requirements in Section 1226.8.*

1226.6.2 Support areas for examination rooms.

1226.6.2.1 Administrative center or nurse station. *Refer to Section 1226.4.13.1.*

1226.6.2.2 Medication station. *Refer to Section 1226.4.13.2.*

1226.6.2.3 Clean utility room. *Refer to Section 1226.4.13.3.*

1226.6.2.4 Soiled workroom or soiled linen holding. *Refer to Section 1226.4.13.4.*

1226.6.2.5 Consultation room. *Dental facilities must provide a consultation room for private conferences with patients.*

1226.6.2.6 Sterilization facilities. *If sterile processing and/or high level disinfection is provided, the sterile processing room shall consist of a decontamination area and a clean work area. The sterile processing/high level disinfection room shall be designed to provide one-way flow of contaminated materials/instruments to the sterilizer/high level disinfection equipment. Sterile/high level disinfected instruments should be distributed from the area in such a manner that processed items do not pass through the decontamination area.*

1226.6.2.6.1 Decontamination area. *The decontamination area shall be equipped with the following:*

1. *Countertop, separated from clean countertop by 4 feet minimum distance.*
2. *Handwashing station separate from the instrument washing sink.*
3. *Sink for washing instruments. To avoid splash, the decontamination sink shall be separated from the clean work area by either a 4-foot distance from the edge of the sink or a separating wall or screen. If a screen is used, it shall extend a minimum of 4 feet (1220 mm) above the sink rim.*
4. *Storage for supplies.*

1226.6.2.6.2 Clean work area. *The clean work area shall be equipped with the following:*

1. *Countertop, separated from decontamination countertop by 4 feet minimum distance.*

2. *Sterilizer/high level disinfection equipment, as required for the services provided.*
3. *Handwashing station; may share with decontamination area handwashing station.*
4. *Built-in storage for supplies.*

1226.6.2.7 Laboratory. *Facilities for laboratory services shall be provided in dental facilities or through a contract arrangement with a laboratory service.*

1226.6.3 Support areas for patients.

...

SURGICAL CLINICS

1226.8 SURGICAL CLINICS. ...

1226.8.1 Outpatient surgical service space.

1226.8.1.1 Operating room(s). *Refer to Section 1224.39.2, Item 1.*

1226.8.1.2 ~~Preoperative patient holding~~ Perioperative services. *Provide preoperative patient holding and post-anesthesia recovery area. Refer to Section ~~1224.15.2~~1224.16.*

~~***1226.8.1.3 Post-anesthesia recovery area.*** *Refer to Section 1224.16.*~~

1226.9 CHRONIC DIALYSIS CLINICS. ...

1226.9.2.1.1 Handwashing stations ~~fixtures~~. *Handwashing stations ~~fixture(s)~~ shall be ~~located convenient~~ directly accessible to the administrative center or nurses' station and to patient treatment areas. ~~There shall be at least one h~~Handwashing ~~fixture~~ stations may serve~~ing~~ no more than four patient stations. These shall be uniformly distributed to provide equal access from each patient station. Refer to Section 1224.3 for the definition of a handwashing station ~~fixture~~.*

1226.9.2.5 Housekeeping room. *Provide a housekeeping room that is immediately accessible ~~adjacent~~ to, and for the exclusive use of, the unit~~. In addition, In addition, t~~This room shall ~~be~~ have a minimum floor area of 15 square feet (1.4 m^2) and shall include the following: ...*

1226.10 REHABILITATION CLINICS. ...

1666.10.3 Public and administrative.

...

1226.10.3.1.3 Toilets~~(s)~~. *Refer to Section 1224.4.5 ~~1224.4.4.5~~.*

1226.10.3.1.4 Drinking fountain. *Refer to Section 1224.4.5 ~~1224.4.4.5~~.*

1226.10.3.1.5 Telephone. *Refer to Section 1224.4.5 ~~1224.4.4.5.~~*

1226.11 ALTERNATIVE BIRTHING CLINICS. ...

1226.11.2.6 Clean-up room. *Each birthing room shall have immediate access to a clean-up room with a handwashing station ~~fixture~~ and work space which is separate from any sterilizing facilities. The clean-up room shall provide 24 square feet (2.23 m^2) per birthing room, up to eight rooms, with no dimension less than 6 feet (1829 mm).*

NOTATION:
Authority: Health and Safety Code Sections 1226, 1275, 18928, 129790 and 129850; Government 11152.5
Reference: Health and Safety Code Section 129850

CHAPTER 13
ENERGY EFFICIENCY

Entire Chapter not adopted for OSHPD 1, 2, 3, & 4.

NOTATION:
Authority: Health and Safety Code Sections 1226, 1275, 18928, 129790 and 129850; Government 11152.5
Reference: Health and Safety Code Section 129850

CHAPTER 14
EXTERIOR WALLS

Adopt entire 2015 International Building Code (IBC) Chapter and carry forward existing amendments of the 2013 California Building Code (CBC) for OSHPD 1, 2 & 4.

NOTATION:
Authority: Health and Safety Code Sections 1275, 18928, 129790 and 129850; Government 11152.5
Reference: Health and Safety Code Section 129850

CHAPTER 15
ROOF ASSEMBLIES AND ROOFTOP STRUCTURES

Adopt entire 2015 International Building Code (IBC) Chapter and carry forward existing amendments of the 2013 California Building Code (CBC) for OSHPD 1, 2 & 4.

NOTATION:
Authority: Health and Safety Code Sections 1275, 18928, 129790 and 129850; Government 11152.5
Reference: Health and Safety Code Section 129850

2016 CALIFORNIA BUILDING CODE
OFFICE OF STATEWIDE HEALTH PLANNING & DEVELOPMENT
STRUCTURAL FINAL EXPRESS TERMS INDEX

1. Preambles for Express Terms
2. Chapter 1– Scope and Administration
3. Chapter 2 – Definitions
4. Chapter 14 – Exterior Walls
5. Chapter 15 – Roof Assemblies and Rooftop Structures
6. Chapter 16 – Structural Design
7. Chapter 16A – Structural Design
8. Chapter 17 – Structural Tests and Special Inspections
9. Chapter 17A – Structural Tests and Special Inspections
10. Chapter 18 – Soils and Foundations
11. Chapter 18A– Soils and Foundations
12. Chapter 19 – Concrete
13. Chapter 19A – Concrete
14. Chapter 20 – Aluminum
15. Chapter 21 – Masonry
16. Chapter 21A – Masonry
17. Chapter 22 – Steel
18. Chapter 22A – Steel
19. Chapter 23 – Wood
20. Chapter 24 – Glass & Glazing
21. Chapter 25 – Gypsum Board & Plaster
22. Chapter 34A – Existing Structures
23. Chapter 35 – Referenced Standards
24. Appendix J – Grading
25. Appendix L – Earthquake Recording Instrumentation

FINAL EXPRESS TERMS
FOR
PROPOSED BUILDING STANDARDS
OF THE
OFFICE OF STATEWIDE HEALTH PLANNING AND DEVELOPMENT (OSHPD)
REGARDING PROPOSED CHANGES TO

THE CALIFORNIA BUILDING CODE
CALIFORNIA CODE OF REGULATIONS, TITLE 24, PART 2, VOLUMES 1 & 2

The Office of Statewide Health Planning and Development (OSHPD) proposes to adopt the 2015 edition of the International Building Code (IBC 2015) of International Code Council for codification and effectiveness in the 2016 edition of the California Building Code as presented on the following pages, including any necessary amendments. OSHPD further proposes to:

- Adopt new building standards that are not addressed by the 2015 model code proposed for adoption.
- Adopt new necessary amendments to the 2015 model code proposed for adoption.
- Relocate existing adopted and necessary amendments of the current model code into the format of the 2015 model code proposed for adoption. These amendments with editorial changes only are outside the rulemaking and are not subject to public comments. All amendments shown highlighted are existing and are not part of the rulemaking.

LEGEND FOR EXPRESS TERMS

1. Model code text: All International Building Code (IBC) text is shown in regular/*italics* type face.
2. Existing California amendments: All such language appears in *italics.*
3. Code language being modified: All such language appears in *italics and underlined*.
4. Repealed text: Repeal of 2015 IBC language appears in ~~strikeout~~.
5. Existing deletion: IBC model code language that was deleted in the previous Code Adoption Cycles is shown for clarity only. This language appears in ~~strikeout and highlight~~.
6. Existing amendments in 2013 CBC, Chapter 19A: Existing amendments in Sections 1903A through 1905A of the 2013 CBC which are *underlined and italicized* appear in *underline, italics and highlight*. Deletion of existing amendments in Sections 1903A through 1905A appears in ~~*italics, strikeout, and underline.*~~
7. Instructions: Texts which are instructions only that are not amendments and will not be printed appears in [redacted].

Note:
Following each chapter of the proposed regulations is a notation that cites specific statute(s) that authorizes the adoption of these regulations and statute that allows for regulations to clarify the subject matter being implemented, interpreted or made specific by the authority statute(s).

2016 CALIFORNIA BUILDING CODE

CHAPTER 1
SCOPE AND ADMINISTRATION
DIVISION I
CALIFORNIA ADMINISTRATION

SECTION 1.1
GENERAL

1.1.1 Title. *These regulations shall be known as the California Building Code, may be cited as such and will be referred to herein as "this code." The California Building Code is Part 2 of twelve parts of the official compilation and publication of the adoption, amendment and repeal of building regulations to the California Code of Regulations, Title 24, also referred to as the California Building Standards Code. This part incorporates by adoption the ~~2012~~ 2015 International Building Code of the International Code Council with necessary California amendments.*

...

SECTION 1.10
OFFICE OF STATEWIDE HEALTH PLANNING AND DEVELOPMENT

1.10.1 OSHPD 1. *Specific scope of application of the agency responsible for enforcement, enforcement agency and the specific authority to adopt and enforce such provisions of this code, unless otherwise stated.*

...

1.10.1.2 Applicable building standards. *California Building Standards Code, Title 24, Parts 2, 3, 4, 5, 6, 9 and 11.*
The provisions of Title 24, Part 2, as adopted and amended by OSHPD, shall apply to the applications listed in Section 1.10.1.
OSHPD 1 adopts the following building standards in Title 24, Part 2:
Chapters 2 through 10, 12, 14, 15, 16A, 17A, 18A, 19A, 20, 21A, 22A, 23, 24, 25, 26, 30, 31, 32, 33, 34A, 35~~, Appendix J~~ and Appendix L.

...

1.10.2 OSHPD 2. *Specific scope of application of the agency responsible for enforcement, enforcement agency and the specific authority to adopt and enforce such provisions of this code, unless otherwise stated.*

...

1.10.2.2 Applicable building standards. *California Building Standards Code, Title 24, Parts 2, 3, 4, 5, 6, 9, 10 and 11.*
The provisions of Title 24, Part 2, as adopted and amended by OSHPD, shall apply to the applications listed in Section 1.10.2.
OSHPD 2 adopts the following building standards in Title 24, Part 2:
Chapters 2 through 10, 12, 14, 15, 16, 17, 18, 19, 20, 21, 22, 23, 24, 25, 26, 30, 31, 32, 33~~, 34,~~ and 35. ~~, Appendices J and L.~~

...

1.10.3 OSHPD 3. *Specific scope of application of the agency responsible for enforcement, enforcement agency and the specific authority to adopt and enforce such provisions of this code, unless otherwise stated.*

...

1.10.3.2 Applicable building standards. *California Building Standards Code, Title 24, Parts 2, 3, 4, 5, 6, 9, 10 and 11.*

The provisions of Title 24, Part 2, as adopted and amended by OSHPD, shall apply to the applications listed in Section 1.10.3.
OSHPD 3 adopts the following building standards in Title 24, Part 2:
Chapter 12.

...

1.10.4 OSHPD 4. *Specific scope of application of the agency responsible for enforcement, enforcement agency and the specific authority to adopt and enforce such provisions of this code, unless otherwise stated.*

...

1.10.4.2 Applicable building standards. *California Building Standards Code, Title 24, Parts 2, 3, 4, 5, 6, 9, 10 and 11.*
The provisions of Title 24, Part 2, as adopted and amended by OSHPD, shall apply to the applications listed in Section 1.10.4.
OSHPD 4 adopts the following building standards in Title 24, Part 2:
Chapters 2 through 10, 12, 14, 15, 16A, 17A, 18A, 19A, 20, 21A, 22A, 23, 24, 25, 26, 30, 31, 32, 33, ~~34A,~~ 35 ~~and Appendices J~~ and Appendix L.

...

DIVISION II
SECTION 101
GENERAL

[A] 101.1 Title. These regulations shall be known as the *California Building Code* of *the State of California*, hereinafter referred to as "this code."

...

[A] 101.4.7 Existing buildings. The provisions of the ~~*International*~~ *California Existing Building Code* shall apply to all matters governing the repairs, alterations, change of occupancy, additions and relocation of existing buildings.

[OSHPD 1] The provisions of the Chapter 34A of this code shall apply to all matters governing the repairs, alterations, change of occupancy, additions, and relocation of existing structures and portions thereof under OSHPD jurisdiction. All references to the International/California Existing Building Code shall be replaced by equivalent provisions in Chapter 34A.

[OSHPD 2 & 4] The provisions of the California Existing Building Code, Chapter 4 the "Prescriptive Compliance Method" shall apply to all matters governing the repairs, alterations, change of occupancy, additions, and relocation of existing structures and portions thereof under OSHPD jurisdiction.

> ***Exception:*** *Performance objectives for incidental and minor additions and alterations of nonconforming buildings shall be permitted to be in accordance with the California Existing Building Code Table 301.1.4.2.*

SECTION 102
APPLICABILITY

[A] 102.1 General. Where there is a conflict between a general requirement and a specific requirement, the specific requirement shall be applicable. Where, in any specific case, different sections of this code specify different materials, methods of construction or other requirements, the most restrictive shall govern.

...

[A] 102.4 Referenced codes and standards. The codes and standards referenced in this code shall be considered part of the requirements of this code to the prescribed extent of each such reference and as further regulated in Sections 102.4.1 ~~and 102.4.2~~ *through 102.4.4.*

...

102.4.3 Code References. [OSHPD 1, 2, 3 & 4] *All reference to International Codes or other similar codes in referenced standards shall be replaced by equivalent provisions in the California Building Standard Codes.*

102.4.4 Reference in Standards. [OSHPD 1, 2, 3 & 4] *All references listed in reference standards shall be replaced by referenced standards listed in Chapter 35 of this code, where applicable, and shall include all amendments to the reference standards in this code.*

...

SECTION 104
DUTIES AND POWERS OF BUILDING OFFICIAL

[A] 104.1 General. The *building official* is hereby authorized and directed to enforce the provisions of this code. The *building official* shall have the authority to render interpretations of this code and to adopt policies and procedures in order to clarify the application of its provisions. Such interpretations, policies and procedures shall be in compliance with the intent and purpose of this code. Such policies and procedures shall not have the effect of waiving requirements specifically provided for in this code.

...

[A] 104.11 Alternative materials, design and methods of construction and equipment. The provisions of this code are not intended to prevent the installation of any material or to prohibit any design or method of construction not specifically prescribed by this code, provided that any such alternative has been *approved*. An alternative material, design or method of construction shall be *approved* where the *building official* finds that the proposed design is satisfactory and complies with the intent of the provisions of this code, and that the material, method or work offered is, for the purpose intended, not less than the equivalent of that prescribed in this code in quality, strength, effectiveness, fire resistance, durability and safety. Where the alternative materials, design or methods of construction is not *approved*, the *building official* shall provide in writing, stating the reasons why the alternative was not *approved*. *[OSHPD 1, 2 & 4] Alternative system shall satisfy ASCE 7 Section 1.3, unless more restrictive requirements are established by this code for an equivalent system. [OSHPD 1, 2 & 4] Alternative systems shall also satisfy the California Administrative Code, Section 7-104.*

...

104.11.3 Peer review. [OSHPD 1 & 4] *When peer review is required, it shall be performed pursuant to Section 3414A.*

104.11.4 Earthquake monitoring instruments. [OSHPD 1 & 4] *The enforcement agency may require earthquake monitoring instruments for any building that receives approval of an alternative system for the Lateral Force Resisting System (LFRS). There shall be a sufficient number of instruments to characterize the response of the building during an earthquake and shall include at least one tri-axial free field instrument or equivalent. A proposal for instrumentation and equipment specifications shall be forwarded to the enforcement agency for review and approval.*

The instruments shall be interconnected for common start and common timing. Each instrument shall be located so that access is maintained at all times and is unobstructed by room contents. A sign stating "MAINTAIN CLEAR ACCESS TO THIS INSTRUMENT" shall be posted in a conspicuous location.

The Owner of the building shall be responsible for the implementation of the instrumentation program. Maintenance of the instrumentation and removal/processing of the records shall be the responsibility of the enforcement agency or its designated agent.

SECTION 105
PERMITS

[A] 105.1 Required. Any owner or owner's authorized agent who intends to construct, enlarge, alter, repair, move, demolish or change the occupancy of a building or structure, or to erect, install, enlarge, alter, repair, remove, convert or replace any electrical, gas, mechanical or plumbing system, the installation of which is regulated by this code, or to cause any such work to be performed, shall first make application to the *building official* and obtain the required *permit*.

...

[A] 105.3.2 Time limitation of application. An application for a permit for any proposed work shall be deemed to have been abandoned 180 days after the date of filing, unless such application has been pursued in good faith or a permit has been issued; except that the building official is authorized to grant one or more extensions of time for additional periods not exceeding 90 days each. The extension shall be requested in writing and justifiable cause demonstrated. *[OSHPD 1, 2, & 4] Time limitation shall be in accordance with the California Administrative Code, Chapter 7, Section 7-129.*

...

SECTION 106
FLOOR AND ROOF DESIGN LOADS

[A] 106.1 Live loads posted. In commercial, *institutional* or industrial buildings, for each floor or portion thereof designed for live loads exceeding 50 psf (2.40 kN/m^2), such design live loads shall be conspicuously posted by the owner or owner's authorized agent in that part of each *story* in which they apply, using durable signs. It shall be unlawful to remove or deface such notices.

106.1.1 Snow Load Posting. [OSHPD 1, 2, & 4] *Snow loads used in design shall be posted as for live loads.*

~~***106.1.2 Load Posting Responsibility. [OSHPD 1, 2, & 4]*** *The owner or governing board shall be responsible for keeping the actual load below the allowable limits.*~~

[A] 106.2 Issuance of certificate of occupancy. A certificate of occupancy required by Section 111 shall not be issued until the floor load signs, required by Section 106.1, have been installed.

[A] 106.3 Restrictions on loading. It shall be unlawful to place, or cause or *permit* to be placed, on any floor or roof of a building, structure or portion thereof, a load greater than is permitted by this code.

SECTION 107
SUBMITTAL DOCUMENTS

[A] 107.1 General. Submittal documents consisting of *construction documents*, statement of *special inspections*, geotechnical report and other data shall be submitted in two or more sets with each *permit* application. The *construction documents* shall be prepared by a *registered design professional* where required by the statutes of the jurisdiction in which the project is to be constructed. Where special conditions exist, the *building official* is authorized to require additional *construction documents* to be prepared by a *registered design professional*.

Exception: The *building official* is authorized to waive the submission of *construction documents* and other data not required to be prepared by a *registered design professional* if it is found that the nature of the work applied for is such that review of *construction documents* is not necessary to obtain compliance with this code.

[A] 107.2 Construction documents. *Construction documents* shall be in accordance with Sections 107.2.1 through 107.2.6.

...

[A] 107.3.4.2 Deferred submittals.

Deferral of any submittal items shall have the prior approval of the *building official*. The *registered design professional in responsible charge* shall list the deferred submittals on the *construction documents* for review by the *building official*.

Documents for deferred submittal items shall be submitted to the *registered design professional in responsible charge* who shall review them and forward them to the *building official* with a notation indicating that the deferred submittal documents have been reviewed and been found to be in general conformance to the design of the building. The deferred submittal items shall not be installed until the deferred submittal documents have been *approved* by the *building official. [OSHPD 1, 2, & 4] Deferred submittals shall be in accordance with the California Administrative Code, Chapter 7, Section 7-126.*

...

(All existing amendments that are not revised above shall continue without any change)

NOTATION:
Authority: Health and Safety Code Section 129850
Reference: Health and Safety Code Sections 1275, 129850 and 129790

CHAPTER 2
DEFINITIONS

...

SECTION 201
GENERAL

201.1 Scope. Unless otherwise expressly stated, the following words and terms shall, for the purposes of this code, have the meanings shown in this chapter.

...

SECTION 202
DEFINITIONS

...

ACTIVE EQUIPMENT/COMPONENT. [OSHPD 1, 2, 3 & 4] *Equipment/Component containing moving or rotating parts, electrical parts such as switches or relays, or other internal components that are sensitive to earthquake forces and critical to the function of the equipment.*

ALTERNATIVE SYSTEM. [OSHPD 1 & 4] *Alternative materials, design and methods of construction in accordance with Section 104.11, Section 11.1.4 of ASCE 7 or structural design criteria as approved by the enforcement agency.*

...

DIAPHRAGM. ...

...

~~**Diaphragm, rigid.** [OSHPD 1 & 4] A diaphragm is rigid for the purpose of distribution of story shear and torsional moment *where so indicated in Section 12.3.1 of ASCE 7.*~~

...

ENFORCEMENT AGENT. [OSHPD 1, 2, 3 & 4] *That individual within the agency or organization charged with responsibility for agency or organization compliance with the requirements of this Code. Used interchangeably with Building Official and Code Official.*

...

Freestanding Acute Psychiatric Building (APB). [OSHPD 1] *A freestanding building, as defined in the California Administrative Code Section 7-111, that provides 24-hour inpatient Acute Psychiatric Services as defined in the Health and Safety Code (H&SC) Section 1250(b) or as special services in accordance with H&SC Section 1255(a)(5) of a general acute care hospital defined in H&SC Section 1250(a) and all structures required for their continuous operation or access/egress.*

Freestanding Skilled Nursing Building (SNB). [OSHPD 1] *A freestanding building, as defined in the California Administrative Code Section 7-111, that provides skilled nursing and/or intermediate care as defined in the Health and Safety Code Section 1250(c) or (d), and all structures required for their continuous operation or access/egress.*

...

General Acute Care Building (GAC Building). [OSHPD 1] *Hospital buildings as defined in the California Administrative Code Section 7-111 and all structures required for their continuous operation or access/egress, except Freestanding Skilled Nursing Building (SNB) and Acute Psychiatric Building (APB).*

...

INCIDENTAL STRUCTURAL ALTERATIONS, ADDITIONS, OR REPAIRS. [OSHPD 1, 2 & 4] *Alterations, additions or repairs which would not reduce the story lateral shear force-resisting capacity by more than 5 percent or increase the story shear by more than 5 percent in any existing story or a combination thereof with equivalent effect (not exceeding 5 percent total). The calculation of lateral shear force-resisting capacity and story shear shall account for the cumulative effects of additions and alterations since original construction.*

...

MAJOR STRUCTURAL ALTERATIONS, ADDITIONS, OR REPAIRS. [OSHPD 1, 2 & 4] *Alterations, additions, or repairs of greater extent than minor structural alterations, additions or repairs.*

...

MINOR STRUCTURAL ALTERATIONS, ADDITIONS, OR REPAIRS. [OSHPD 1, 2 & 4] *Alterations, additions or repairs of greater extent than incidental structural additions or alterations which would not reduce the story shear lateral-force-resisting capacity by more than 10 percent or increase the story shear by more than 10 percent in any existing story or a combination thereof with equivalent effect (not exceeding 10 percent total). ~~base shear by more than 10 percent.~~ The calculation of lateral shear force-resisting capacity and story shear shall account for the cumulative effects of additions and alterations since original construction.*

NEXT GENERATION ATTENUATION (NGA). [OSHPD 1, 2 & 4] *Attenuation relations used for the 2008 United States Geological Survey (USGS) seismic hazards maps (for the Western United States) or their equivalent as determined by the enforcement agency.*

...

NON-GENERAL ACUTE CARE BUILDING (NON-GAC BUILDING). [OSHPD 1] *A non-freestanding SPC building, which is removed from general acute care services in accordance with the Section 3418A that remains under OSHPD jurisdiction as part of an OSHPD 1 Hospital building.*

...

NPC 1, NPC 2, NPC 3/NPC 3R, NPC 4, and NPC 5. [OSHPD 1] *~~are the b~~ Building nonstructural performance categories for Hospital Buildings defined in Table 11.1 of California Administrative Code (Part 1, Title 24 CCR), Chapter 6.*

...

RETROFIT. [OSHPD 1, 2 & 4] *The construction of any new element or system, or the alteration of any existing element or system required to bring an existing building, or portion thereof, conforming to*

earlier code requirements, into conformance with standards of the currently effective California Building Standards Code.

...

RUGGED EQUIPMENT. [OSHPD 1, 2, 3 & 4] *Rugged equipment refers to an ampleness of construction that gives such equipment the ability to survive earthquake strong motions without significant loss of function.*

...

SIGNIFICANT LOSS OF FUNCTION. [OSHPD 1, 2 & 4] *Significant loss of function for equipment or components means the equipment or component cannot be restored to its original function by competent technicians after a design earthquake because the equipment or component require parts that are not normally stocked by the Owner or not readily available.*

...

SPC BUILDING. [OSHPD 1] *Means a structure with an independent vertical and lateral force resisting system (LFRS) and a distinct building structural performance category assigned by OSHPD.*

...

SPC 1, SPC 2, SPC 3, SPC 4, SPC 4D and SPC 5. [OSHPD 1] *~~are the~~ ~~b~~ Building structural performance categories for Hospital Buildings defined in Table 2.5.3 of California Administrative Code (Part 1, Title 24 CCR), Chapter 6.*

...

SUBSTANTIAL STRUCTURAL DAMAGE. ***[OSHPD 1~~,~~ 2~~,~~ & 4]*** A condition where one or both of the following apply:

1. The vertical elements of the lateral force-resisting system have suffered damage such that the lateral load-carrying capacity of any story in any horizontal direction has been reduced by more than ~~33~~ *10* percent from its pre-damage condition; or
2. The capacity of any vertical component carrying gravity load, or any group of such components~~,~~ ~~that supports more than 30 percent of the total area of the structure's floor(s) and roof(s)~~ has been reduced more than ~~20~~ *10* percent from its pre-damage condition and the remaining capacity of such affected elements, with respect to all dead and *live loads*, is less than 75 percent of that required by this code for new buildings of similar structure, purpose and location.

...

SURFACE MOUNTED COMPONENT. [OSHPD 1, 2 & 4] *Means component directly attached to only one continuous flat surface of wall, floor or roof, without supports. Surface mounted components are directly attached to a surface by attachments (without any supports) and are not rigidly connected to anything else (e. g. distribution system, other components, etc.).*

...

TORQUE-CONTROLLED POST-INSTALLED ANCHOR. [OSHPD 1, 2 & 4] *A post-installed anchor that is set by the expansion of one or more sleeves or other elements against the sides of the drilled hole through the application of torque, which pulls the cone(s) into the expansion sleeve(s); after setting, tensile loading can cause additional expansion (follow-up expansion).*

...

(All existing amendments that are not revised above shall continue without any change)

NOTATION:
Authority: Health and Safety Code Section 129850
Reference: Health and Safety Code Sections 1275, 129850 and 129790

CHAPTER 14
EXTERIOR WALLS

SECTION 1401
GENERAL

1401.1 Scope. The provisions of this chapter shall establish the minimum requirements for exterior walls; *exterior wall* coverings; *exterior wall* openings; exterior windows and doors; architectural *trim*; balconies and similar projections; and bay and oriel windows.

...

SECTION 1405
INSTALLATION OF WALL COVERINGS

1405.1 General. *Exterior wall coverings* shall be designed and constructed in accordance with the applicable provisions of this section.

1405.1.1 Additional requirements. [OSHPD 1~~, 2,~~ and 4] *In addition to the requirements of Sections 1405.6, 1405.7, 1405.8, 1405.9, and 1405.10, the installation of anchored or adhered veneer shall comply with applicable provisions of Section ~~1410~~ 1411.*

...

SECTION ~~1410~~ 1411 [OSHPD 1~~, 2,~~ AND 4]
ADDITIONAL REQUIREMENTS FOR ANCHORED AND ADHERED VENEER.

1411.1 ~~1410.1~~ General. *In no case shall veneer be considered as part of the backing in computing strength or deflection nor shall it be considered a part of the required thickness of the backing. Veneer shall be anchored in a manner which will not allow relative movement between the veneer and the wall.*

Anchored or adhered veneer shall not be used on overhead horizontal surfaces.

1411.2 ~~1410.2~~ Adhered Veneer. *Units of tile, masonry, stone or terra cotta which exceed 5/8 inch (16 mm) in thickness shall be applied as for anchored veneer where used over exit ways or more than 20 feet (6096 mm) in height above adjacent ground elevation.*

1411.2.1 ~~1410.2.1~~ Bond Strength and Tests. *Veneer shall develop a bond to the backing in accordance with TMS 402, Section ~~6.3.2.4~~ 12.3.2.4.*
Not less than two shear tests shall be performed for the adhered veneer between the units and the supporting element. At least one shear test shall be performed at each building for each 5,000 square feet (465 m^2) of floor area or fraction thereof.

(All existing amendments that are not revised above shall continue without any change)

Notation:
Authority: Health and Safety Code Section 129850
Reference: Health and Safety Code Sections 1275, 129850 and 129790

CHAPTER 15
ROOF ASSEMBLIES AND ROOFTOP STRUCTURES

SECTION 1501
GENERAL

1501.1 Scope. The provisions of this chapter shall govern the design, materials, construction and quality of roof assemblies, and rooftop structures.

...

SECTION 1507
REQUIREMENTS FOR ROOF COVERINGS

1507.1 Scope. Roof coverings shall be applied in accordance with the applicable provisions of this section and the manufacturer's installation instructions.

...

1507.3.10 Additional requirements. [OSHPD 1~~, 2,~~ and 4] *In addition to the requirements of 1507.3.6 and 1507.3.7, the installation of clay and concrete tile roof coverings shall comply with seismic anchorage provisions of Section 1513. ~~1512.~~*

...

1507.7 Slate shingles. The installation of slate shingles shall comply with the provisions of this section.

...

1507.7.8 Additional requirements. [OSHPD 1~~, 2,~~ and 4] *In addition to the requirements of Section 1507.7.5, the installation of slate shingle roof coverings shall comply with the requirements of Sections 1507.3.6 and 1507.3.7, the installation of slate shingle roof coverings shall comply with seismic anchorage provisions of Section 1513. ~~1512.~~*

...

SECTION 1513 ~~1512~~ [OSHPD 1~~, 2,~~ AND 4]
SEISMIC ANCHORAGE OF SLATE SHINGLE, CLAY AND CONCRETE TILE ROOF COVERINGS

1513.1 ~~1512.1~~ Fasteners. *Nails shall be long enough to penetrate into the sheathing 3/4 inch (19 mm). Where sheathing is less than 3/4 inch (19 mm) in thickness, nails shall be driven into supports, unless nails with ring shanks are used.*
All fasteners shall be corrosion resistant and fabricated of copper, stainless steel, or brass, or shall have a hot dipped galvanized coating not less than 1.0 ounce of zinc per square foot (305 gm/m^2). Nails for slate shingles and clay or concrete tile shall be copper, brass or stainless steel with gage and length per common ferrous nails.

1513.2 ~~1512.2~~ Wire. *Wire for attaching slate shingles and clay or concrete tile shall be copper, brass or stainless steel capable of supporting four times the weight of tile.*
Wire supporting a single tile or shingle shall not be smaller than 1/16 inch (1.6 mm) in diameter. Continuous wire ties supporting more than one tile shall not be smaller than 0.084 inch (2 mm) in diameter.

1513.3 ~~1512.3~~ Metal strips. *Metal strips for attaching slate shingles and clay or concrete tile shall be copper, brass or stainless steel capable of supporting four times the weight of tile.*

1513.4 ~~1512.4~~ Clay or Concrete Tiles. *Clay or concrete tile shall be installed in accordance with Table 1507.3.7 and as described herein.*

1. *On wood roofs or roofs of other material to which wood strips are secured, every cover or top tile when fastened with nails shall be nailed directly into 1-1/4 inches (32 mm) sound grain soft wood strips of sufficient height to support the tile.*
   Pan or bottom tiles shall be nailed directly to the roof sheathing or to wood strips. Wood strips shall be secured to the roof by nails spaced not over 12 inches (305 mm) apart.

2. *On concrete roofs, wires shall be secured in place by wire loops embedded into the concrete not less than 2 inches (51 mm). The wire loops shall be spaced not more than 36 inches (914*

mm) on center parallel to the eaves, and spaced vertically to allow for the minimum 3 inches (76 mm) lapping of the tile.

3. *Where continuous ties of twisted wire, interlocking wires or metal strips extending from the ridge to eave are used to attach tile, the ties shall be attached to the roof construction at the ridge, eave, and at intervals not exceeding 10 feet 0 inch (3048 mm) on center. The ties within 2 feet 0 inch (610 mm) of the rake shall be attached at intervals of 5 feet 0 inch (1524 mm). Attachment for continuous ties shall be nails, screws, staples or approved clips of the same material as the ties and shall not be subjected to withdrawal forces. Attachments for continuous ties shall have an allowable working stress shear resistance of not less than twice the dead weight of the tile tributary to the attachment, but not less than 300 pounds (136 kg).*

4. *Tile with projecting anchor lugs at the bottom of the tiles shall be held in position by means of 1-inch by 2-inch (25mm by 51mm) wood stripping nailed to the roof sheathing over the underlay.*

5. *Clay or concrete tile on roofs with slopes exceeding 24 units vertical in 12 units horizontal (200 percent slope) shall be attached as required for veneer in Chapter 14. The nose of all tiles shall be securely fastened.*

6. *Clay or concrete tile shall have a minimum of two fasteners per tile. Tiles that are 8 inches (203 mm) in width or less are permitted to be fastened at the center of the head with one fastener per tile.*

7. *Interlocking clay or concrete tile shall have a minimum of one nail near center of head or two wire ties per tile.*

1513.5 ***~~1512.5~~*** ***Slate Shingles.*** *Slate shingles on roofs with slopes exceeding 24 units vertical in 12 units horizontal (200 percent slope) shall be attached as required for veneer in accordance with Chapter 14.*

[All existing amendments that are not revised above shall continue without any change]

NOTATION:
Authority: Health and Safety Code Section 129850
Reference: Health and Safety Code Sections 1275, 129850 and 129790

CHAPTER 16
STRUCTURAL DESIGN

SECTION 1601
GENERAL

1601.1 Scope. The provisions of this chapter shall govern the structural design of buildings, structures and portions thereof regulated by this code.

1601.2 Enforcement Agency Approval. [OSHPD 2] *In addition to requirements of the California Administrative Code and the California Building Code, any aspect of project design, construction, quality assurance, or quality control programs for which this code requires approval by the design professional, are also subject to approval by the enforcement agency.*

...

SECTION 1603
CONSTRUCTION DOCUMENTS

1603.1 General. Construction documents shall show the size, section and relative locations of

structural members with floor levels, column centers and offsets dimensioned. The design loads and other information pertinent to the structural design required by Sections 1603.1.1 through 1603.1.8 shall be indicated on the construction documents.

[OSHPD 2] Additional requirements are included in Section 7-115 and 7-125 of the California Administration Code (Part 1, Title 24, C.C.R).

...

SECTION 1607
LIVE LOADS

1607.1 General. Live loads are those loads defined in Chapter 2 of this code.

TABLE 1607.1 MINIMUM UNIFORMLY DISTRIBUTED LIVE LOADS, L_0, AND MINIMUM CONCENTRATED LIVE LOADS[g]

OCCUPANCY OR USE	UNIFORM (psf)	CONCENTRATED (lbs.)
...	...	...
36. [OSHPD 2] Storage racks and wall-hung cabinets.	*Total Loads[n]*	

...

n. [OSHPD 2] The minimum vertical design live load shall be as follows:

Paper media:
12-inch-deep (305 mm) shelf 33 pounds per lineal foot (482 N/m)
15-inch-deep (381 mm) shelf 41 pounds per lineal foot (598 N/m), or
33 pounds per cubic foot (5183 N/m^3) per total volume of the rack or cabinet, whichever is less.
Film media:
18-inch-deep (457 mm) shelf 100 pounds per lineal foot (1459 N/m), or
50 pounds per cubic foot (7853 N/m^3) per total volume of the rack or cabinet, whichever is less.
Other media:
20 pounds per cubic foot (311 N/m3) or 20 pounds per square foot (958 Pa), whichever is less, but not less than actual loads.

...

SECTION 1612
FLOOD LOADS

1612.3 Establishment of flood hazard areas. To establish flood hazard areas, the governing body shall adopt a flood hazard map and supporting data. The flood hazard map shall include, at a minimum, areas of special flood hazard as identified by the Federal Emergency Management Agency in an engineering report entitled "The Flood Insurance Study for [INSERT NAME OF JURISDICTION]," dated [INSERT DATE OF ISSUANCE], as amended or revised with the accompanying Flood Insurance Rate Map (FIRM) and Flood Boundary and Floodway Map (FBFM) and related supporting data along with any revisions thereto. The adopted flood hazard map and supporting data are hereby adopted by reference and declared to be part of this section.

***Exception: [OSHPD 2]** The flood hazard map shall include, at a minimum, areas of special flood hazard as identified by the Federal Emergency Management Agency's Flood Insurance Study (FIS) adopted by the local authority having jurisdiction where the project is located.*

...

SECTION 1613
EARTHQUAKE LOADS

1613.1 Scope. Every structure, and portion thereof, including nonstructural components that are permanently attached to structures and their supports and attachments, shall be designed and constructed to resist the effects of earthquake motions in accordance with ASCE 7, excluding Chapter 14 and Appendix 11A. The seismic design category for a structure is permitted to be determined in accordance with Section 1613 or ASCE 7.

Exceptions:

1. Detached one- and two-family dwellings, assigned to Seismic Design Category A, B or C, or located where the mapped short-period spectral response acceleration, S_S, is less than 0.4 g.
2. The seismic-force-resisting system of wood-frame buildings that conform to the provisions of Section 2308 are not required to be analyzed as specified in this section. *[OSHPD 2] Not permitted by OSHPD, see Section 2308.*
3. Agricultural storage structures intended only for incidental human occupancy.
4. Structures that require special consideration of their response characteristics and environment that are not addressed by this code or ASCE 7 and for which other regulations provide seismic criteria, such as vehicular bridges, electrical transmission towers, hydraulic structures, buried utility lines and their appurtenances and nuclear reactors.
5. *[OSHPD 2] Seismic Design Category shall be in accordance with exception to Section 1613.3.5.*

...

1613.3.1 Mapped acceleration parameters. The parameters S_s and S_1 shall be determined from the 0.2 and 1-second spectral response accelerations shown on Figures 1613.3.1(1) through 1613.3.1(8). Where S_1 is less than or equal to 0.04 and S_s is less than or equal to 0.15, the structure is permitted to be assigned to *Seismic Design Category* A.

> ***Exception:*** *[OSHPD 2] Seismic Design Category shall be in accordance with exception to Section 1613.3.5.*

...

1613.3.5 Determination of seismic design category. Structures classified as *Risk Category* I, II or III that are located where the mapped spectral response acceleration parameter at 1-second period, S_1, is greater than or equal to 0.75 shall be assigned to *Seismic Design Category* E. Structures classified as *Risk Category* IV that are located where the mapped spectral response acceleration parameter at 1-second period, S_1, is greater than or equal to 0.75 shall be assigned to *Seismic Design Category* F. All other structures shall be assigned to a *seismic design category* based on their *risk category* and the design spectral response acceleration parameters, S_{DS} and S_{D1}, determined in accordance with Section 1613.3.4 or the site-specific procedures of ASCE 7. Each building and structure shall be assigned to the more severe *seismic design category* in accordance with Table 1613.3.5(1) or 1613.5.5(2), irrespective of the fundamental period of vibration of the structure, T.

> ***Exception: [OSHPD 2]*** *Structures not assigned to seismic design category E or F above shall be assigned to seismic design category D.*

1613.3.5.1 Alternative seismic design category determination.

...

> ***Exception: [OSHPD 2]*** *Seismic design category shall be determined in accordance with exception to Section 1613.3.5.*

1613.3.5.2 Simplified design procedure. Where the alternate simplified design procedure of ASCE 7 is used, the seismic design category shall be determined in accordance with ASCE 7.

***Exception:* [OSHPD 2]** *Seismic design category shall be determined in accordance with exception to Section 1613.3.5.*

...

All existing amendments that are not revised above shall continue without any change.

NOTATION:
Authority: Health and Safety Code Section 129850
Reference: Health and Safety Code Sections 1275 and 129850

CHAPTER 16A
STRUCTURAL DESIGN

SECTION 1601A
GENERAL

1601A.1 Scope. The provisions of this chapter shall govern the structural design of buildings, structures and portions thereof regulated by this code.

1601A.1.1 Application. *The scope of application of Chapter 16A is as follows:*

1. *Reserved for DSA.*
2. *Applications listed in Section 1.10.1, and 1.10.4, regulated by the Office of Statewide Health Planning and Development (OSHPD). These applications include hospitals, skilled nursing facilities, intermediate care facilities, and correctional treatment centers.*

***Exception:* [OSHPD 2]** *Single-story Type V skilled nursing or intermediate care facilities utilizing wood-frame or light-steel-frame construction as defined in Health and Safety Code Section 129725, which shall comply with Chapter 16 and any applicable amendments therein.*

1601A.1.2 Amendments in this chapter. *OSHPD adopt this chapter and all amendments.*

Exception: *Amendments adopted by only one agency appear in this chapter preceded with the appropriate acronym of the adopting agency, as follows:*

1. *Reserved for DSA.*
2. *Office of Statewide Health Planning and Development:*
   [OSHPD 1] *- For applications listed in Section 1.10.1.*
   [OSHPD 4] *- For applications listed in Section 1.10.4.*

1601A.2 Enforcement Agency Approval. *In addition to requirements of the California Administrative Code and the California Building Code, any aspect of project design, construction, quality assurance, or quality control programs for which this code requires approval by the Registered ~~d~~ Design ~~p~~ Professional (RDP), are also subject to approval by the enforcement agency.*

SECTION 1602A
DEFINITIONS AND NOTATIONS

1602A.1 Definitions. The following terms are defined in Chapter 2 *except those defined below which shall, for the purposes of this section, have the meanings shown herein.*

...

~~***HOSPITAL BUILDING.*** *Any building defined in Section 129725, Health and Safety Code.*~~

SECTION 1603*A*
CONSTRUCTION DOCUMENTS

1603*A*.1 General. Construction documents shall show the size, section and relative locations of structural members with floor levels, column centers and offsets dimensioned. The design loads and other information pertinent to the structural design required by Sections 1603A.1.1 through ~~1603.1.8~~ *1603A.1.9* shall be indicated on the *construction documents.*

...

[OSHPD 1] Additional requirements are included in Section 7-115 and 7-125 of the California Administrative Code. ~~*(Part 1, Title 24, C.C.R).*~~

...

1603*A*.1.5 Earthquake design data. The following information related to seismic loads shall be shown, regardless of whether seismic loads govern the design of the lateral-force-resisting system of the building:

1. Risk Category
2. Seismic importance factor, I_e.
3. Mapped spectral response accelerations, S_S and S_1.
4. Site class.
5. Design spectral response acceleration parameters, S_{DS} and S_{D1}.
6. Seismic design category.
7. Basic seismic-force-resisting system(s).
8. Design base shear.
9. Seismic response coefficient(s), C_S.
10. Response modification factor(s), R.
11. Analysis procedure used.
12. *Applicable horizontal structural irregularities.*
13. *Applicable vertical structural irregularities.*
14. *Location of base as defined in Section 1613A.2.*

1603A.1.5.1 Connections. *Connections that resist design seismic forces shall be designed and detailed on the design drawings.*

...

1603A.1.9 ~~***1603A.1.10***~~ ***Construction Procedures.*** *Where unusual erection or construction procedures are considered essential by the Registered Design Professional (RDP) in order to accomplish the intent of the design or influence the construction* ~~*design*~~*, such procedure shall be indicated on the construction documents.*

1603A.2 Site Data Reports. *Geotechnical and Geohazard reports for review by the enforcement agency shall be accompanied by a description of the project prepared by the Registered Design Professional (RDP) in responsible charge, which shall include the following:*

1. *Type of service such as General Acute Care Facility, Skilled Nursing Facility, Intermediate Care Facility, Acute Psychiatric Facility, Central Utility Plants, etc.*
2. *Construction materials used for the project such as Steel, Concrete. Masonry, Wood, etc.*
3. *Type of construction project such as new, addition, alteration, repair, etc.*
4. *For existing buildings, extent of construction such as incidental, minor, major, and/or voluntary seismic improvements as defined in Sections 202 and 3402A.*~~*2*~~ ***[OSHPD 1 & 4].***
5. *Seismic Force Resisting System used for each structure in the project.*
6. *Foundation system that will be used for each structure in the project such as spread footing, drilled piers, etc.*
7. *Analysis procedure used and basis of design such as ASCE 7 Equivalent Lateral Force Procedure, ASCE 41 Nonlinear Dynamic Procedure, etc.*

8. *Building characteristics such as number of stories above and below grade, foot print area at grade, grade slope on site, etc.*
9. *Special features such as requirement for shoring, underpinning, retaining walls, etc.*

1603A.3 Structural Design Basis and Calculations. *The application for the approval of construction documents that involves structural elements or components shall be accompanied by complete and accurate structural design computations, which shall comply with requirements prescribed by the enforcement agency:*

1. *The computations shall be preceded by a detailed index.*
2. *The computations including each major subsection shall be prefaced by a statement clearly and concisely outlining the basis for the structural design and indicating the manner in which the structure will resist the vertical loads and lateral forces.*
3. *The computations shall be sufficiently complete to the extent that calculations for the individual structural members and connections can be readily interpreted.*

SECTION 1604A
GENERAL DESIGN REQUIREMENTS

1604A.3 Serviceability. Structural systems and members thereof shall be designed to have adequate stiffness to limit deflections and lateral drift. See Section 12.12.1 of ASCE 7 for drift limits applicable to earthquake loading.

1604A.3.1 Deflections. The deflections of structural members shall not exceed the more restrictive of the limitations of Sections 1604A.3.2 through *1604A.3.6* or that permitted by Table 1604A.3.

TABLE 1604A.3 - DEFLECTION LIMITS[a, b, c, h, i]

CONSTRUCTION	*L or L_r*	*S* or *W*[f]	*D + (L or Lr)* [d,g]
...	...	...	...
... *Veneered walls, anchored veneers and adhered veneers over 1 inch (25 mm) thick, including the mortar backing*	... —	... *l/600*	... —
Farm buildings	—	—	*l*/180
Greenhouses	—	—	*l*/120

...

1604A.3.7 Horizontal diaphragms. *The maximum span-~~width~~ depth ratio for any roof or floor diaphragm consisting of steel and composite steel slab decking shall not exceed those given in ~~Table 4.2.4 of AF & PA SDPWS for wood or maximum span-depth ratio given in~~ Table 1604A.4 ~~for steel and composite steel-slab decking~~, unless test data and design calculations acceptable to the enforcement agency are submitted and approved for the use of other ~~span-width or~~ span-depth ratios. Concrete diaphragms shall not exceed the span- depth ratios for the equivalent composite steel-slab diaphragm in Table 1604A.4.*

TABLE 1604A.4 – MAXIMUM HORIZONTAL DIAPHRAGM SPAN AND SPAN-DEPTH RATIOS[1,3,4]

FLEXIBILITY FACTOR(F)[2]	MAXIMUM DIAPHRAGM SPAN FOR MASONRY OR CONCRETE WALLS (feet)	DIAPHRAGM SPAN-DEPTH LIMITATION			
		Rotation (torsion) Not Considered in Diaphragm		Rotation (torsion) Considered in Diaphragm	
		Masonry or Concrete Walls	Flexible Walls	Masonry or Concrete Walls	Flexible Walls
More than 150	Not to be used	Not to be used	2:1	Not to be used	1-1/2:1
70-150	200	2:1 or as required for deflection	3:1	Not to be used	2:1
10-70	400	2-1/2:1 or as required for deflection	4:1	As required for deflection	2-1/2:1
1-10	No limitation	3:1 or as required for deflection	5:1	As required for deflection	3:1
Less than 1	No limitation	As required for deflection	No limitation	As required for deflection	3-1/2:1

For SI: 1 inch = 25.4 mm, 1 foot = 304.8 mm, 1 plf = 14.6 N/m, 1 psi = 6894 Pa

[1] Diaphragms shall satisfy span-depth limitations based on flexibility.
[2] Flexibility Factor (F) is the average deflection in micro inches (10^{-6}) or μm of the diaphragm web per foot (m) of span stressed with a shear of 1 pound per foot (N/m).
[3] The total deflection Δ of the diaphragm may be computed from the equation: $\Delta = \Delta_f + \Delta_w$.

Where:

Δ_f = Flexural deflection of the diaphragm determined in the same manner as the deflection of beams. The flexural stiffness of the web of diaphragms consisting of bare steel decking shall be neglected.
Δ_w = Web deflection of the diaphragm may be determined solving the following equation:

$$F = \frac{\Delta_w x 10^6}{q_{ave} L}$$

Where:

L = Distance in feet (m) between the vertical resisting element (such as a shear wall) and the point to which the deflection is to be determined.
q_{ave} = Average shear in the diaphragm in pounds per foot (N/m) over length L.

[4] When applying these limitations to cantilevered diaphragms, the allowable span-depth ratio will be half of that shown.

1604A.3.8 Deflections. *Deflection criteria for materials not specified shall be developed by the project architect or structural engineer in a manner consistent with the provisions of this section and approved by the enforcement agency.*

...

1604A.4 Analysis. Load effects on structural members and their connections shall be determined by methods of structural analysis that take into account equilibrium, general stability, geometric compatibility and both short- and long-term material properties.

Members that tend to accumulate residual deformations under repeated service loads shall have included in their analysis the added eccentricities expected to occur during their service life.

Any system or method of construction to be used shall be based on a rational analysis in accordance with well-established principles of mechanics. Such analysis shall result in a system that provides a complete load path capable of transferring loads from their point of origin to the load-resisting elements.

The total lateral force shall be distributed to the various vertical elements of the lateral force-resisting system in proportion to their rigidities, considering the rigidity of the horizontal bracing system or diaphragm. Rigid elements assumed not to be a part of the lateral force-resisting system are permitted to be incorporated into buildings provided their effect on the action of the system is considered and provided for in the design. *Structural analysis shall explicitly include consideration of stiffness of diaphragms in accordance with ASCE 7 Section 12.3.1.* ~~A diaphragm is rigid for the purpose of distribution of story shear and torsional moment when the lateral deformation of the diaphragm is less than or equal to two times the average story drift.~~ Where required by ASCE 7, provisions shall be made for the increased forces induced on resisting elements of the structural system resulting from torsion due to eccentricity between the center of application of the lateral forces and the center of rigidity of the lateral force resisting system.

Every structure shall be designed to resist the overturning effects caused by the lateral forces specified in this chapter. See Section 1609*A* for wind loads, Section 1610*A* for lateral soil loads and Section 1613*A* for earthquake loads.

...

1604A.5 Risk category. Each building and structure shall be assigned a *risk category* in accordance with Table 1604A.5. Where a referenced standard specifies an occupancy category, the risk category shall not be taken as lower than the occupancy category specified therein. Where a referenced standard specifies that the assignment of a risk category be in accordance with ASCE 7, Table 1.5-1, Table 1604.5 shall be used in lieu of ASCE 7, Table 1.5-1.

...

TABLE 1604*A*.5 - RISK CATEGORY OF BUILDINGS AND OTHER STRUCTURES

RISK CATEGORY	NATURE OF OCCUPANCY
...	...
III	Buildings and other structures that represent a substantial hazard to human life in the event of failure, including but not limited to: ... • ~~Group I-2 occupancies with an occupant load of 50 or more resident care recipients, but not having surgery or emergency treatment facilities.~~ ...
IV	Buildings and other structures designated as essential facilities, including but not limited to: • ~~Group I-2 occupancies having surgery or emergency treatment facilities.~~ • ***[OSHPD 1 & 4]*** *Hospital Buildings as defined in the California Administrative Code, Section 7-111 and all structures required for their continuous operation or access/egress.* ...

...

1604A.8.2 Structural walls. Walls that provide vertical load-bearing resistance or lateral shear resistance for a portion of the structure shall be anchored to the roof and to all floors and members that provide lateral support for the wall or that are supported by the wall. The connections shall be capable of resisting the horizontal forces specified in Section 1.4.4 of ASCE 7 for walls of structures assigned to Seismic Design Category A and to Section 12.11 of ASCE 7 for walls of structures assigned to all other seismic design categories. *For anchorage of concrete or masonry walls to roof and floor diaphragms, the out-of-plane strength design force shall not be less than 280 lb/linear ft (4.09 kN/m) of wall.* Required anchors in masonry walls of hollow units or cavity walls shall be embedded in a reinforced grouted structural element of the wall. See Sections 1609*A* for wind design requirements and 1613*A* for earthquake design requirements.

...

SECTION 1605*A*
LOAD COMBINATIONS

1605*A*.1 General. Buildings and other structures and portions thereof shall be designed to resist:

...

1605*A*.1.1 Stability. Regardless of which load combinations are used to design for strength, where overall structure stability (such as stability against overturning, sliding, or buoyancy) is being verified, use of the load combinations specified in Section 1605*A*.2 or 1605*A*.3 shall be permitted. Where the load combinations specified in Section 1605*A*.2 are used, strength reduction factors applicable to soil resistance shall be provided by a *registered design professional.* The stability of retaining walls shall be verified in accordance with Section 1807*A*.2.3. *When using allowable stress design, factor of safety for soil bearing values shall not be less than the overstrength factor of the structures supported.*

...

SECTION 1606*A*
DEAD LOADS

...

1606A.3 Roof Dead Loads. *The design dead load shall provide for the weight of at least one additional roof covering in addition to other applicable loadings if the new roof covering is permitted to be applied over the original roofing without its removal, in accordance with Section 1511. ~~1510.~~*

...

SECTION 1607*A*
LIVE LOADS

...

1607*A*.1 General. Live *loads* are those loads defined in Chapter 2 of this code.

1607*A*.2 Loads not specified. For occupancies or uses not designated in Table 1607*A*.1, the live load shall be determined in accordance with a method approved by the building official.

1607*A*.3 Uniform live loads. The live loads used in the design of buildings and other structures shall be the maximum loads expected by the intended use or occupancy but shall in no case be less than the minimum uniformly distributed unit loads required by Table 1607*A*.1.

...

TABLE 1607A.1 - MINIMUM UNIFORMLY DISTRIBUTED LIVE LOADS AND MINIMUM CONCENTRATED LIVE LOADS[g]

OCCUPANCY OR USE	UNIFORM (psf)	CONCENTRATED (lbs.)
...	...	...
17. Hospitals *[OSHPD 1 & 4]*		
Corridors above first floor	80~~100~~	1,000
Operating rooms, laboratories	60	1,000
		1,000
Patient rooms	40	—
Mechanical and electrical equipment areas including open areas around equipment	*50*	—
		—
Storage:		
Light	*125*	
Heavy	*250*	*1000*
Dining Area (Not used for assembly)	*100*	*1000*
Kitchen and serving areas	*50*	
...	...	...
36. Storage racks and wall-hung cabinets.	*Total Loads[n]*	

...

n. The minimum vertical design live load shall be as follows:

Paper media:

12-inch-deep (305 mm) shelf 33 pounds per lineal foot (482 N/m)
15-inch-deep (381 mm) shelf 41 pounds per lineal foot (598 N/m), or

33 pounds per cubic foot (5183 N/m^3) per total volume of the rack or cabinet, whichever is less.

Film media:

18-inch-deep (457 mm) shelf 100 pounds per lineal foot (1459 N/m), or

50 pounds per cubic foot (7853 N/m^3) per total volume of the rack or cabinet, whichever is less.

Other media:

20 pounds per cubic foot (311 N/m^3) or 20 pounds per square foot (958 Pa), whichever is less, but not less than actual loads.

...

1607A.12.6 ~~***1607A.12.5***~~ ***Uncovered open-frame roof structures.*** *Uncovered open-frame roof structures shall be designed for a vertical live load of not less than 10 pounds per square foot (0.48 kN/m^2) of the total area encompassed by the framework.*

...

1607*A*.14 Interior walls and partitions. Interior walls and partitions that exceed 6 feet (1829 mm) in height, including their finish materials, shall have adequate strength and stiffness to resist the loads to which they are subjected but not less than a horizontal load of 5 psf (0.240 kN/m^2). *The 5 psf (0.24 kN/m^2) service* ~~*working*~~ *load need not be applied simultaneously with wind or seismic loads. The deflection of such walls under a load of 5 psf (0.24 kN/m^2) shall not exceed the limits in Table 1604A.3.*

...

SECTION 1608*A*
SNOW LOADS

1608*A*.2 Ground snow loads. The ground snow loads to be used in determining the design snow loads for roofs shall be determined in accordance with ASCE 7 or Figure 1608*A*.2 for the contiguous United States ~~and Table 1608.2 for Alaska~~. Site-specific case studies shall be made in areas designated "CS" in Figure 1608*A*.2. Ground snow loads for sites at elevations above the limits indicated in Figure 1608*A*.2 and for all sites within the CS areas shall be approved. Ground snow load determination for such sites shall be based on an extreme value statistical analysis of data available in the vicinity of the site using a value with a 2-percent annual probability of being exceeded (50-year mean recurrence interval). ~~Snow loads are zero for Hawaii, except in mountainous regions as approved by the building official.~~

~~TABLE 1608.2 - GROUND SNOW LOADS, pg , FOR ALASKAN LOCATIONS~~

~~LOCATION~~	~~POUNDS PER SQUARE FOOT~~	~~LOCATION~~	~~POUNDS PER SQUARE FOOT~~	~~LOCATION~~	~~POUNDS PER SQUARE FOOT~~
~~Adak~~	~~30~~	~~Galena~~	~~60~~	~~Petersburg~~	~~150~~
~~Anchorage~~	~~50~~	~~Gulkana~~	~~70~~	~~St. Paul Islands~~	~~40~~
~~Angoon~~	~~70~~	~~Homer~~	~~40~~	~~Seward~~	~~50~~
~~Barrow~~	~~25~~	~~Juneau~~	~~60~~	~~Shemya~~	~~25~~
~~Barter Island~~	~~35~~	~~Kenai~~	~~70~~	~~Sitka~~	~~50~~
~~Bethel~~	~~40~~	~~Kodiak~~	~~30~~	~~Talkeetna~~	~~120~~
~~Big Delta~~	~~50~~	~~Kotzebue~~	~~60~~	~~Unalakleet~~	~~50~~
~~Cold Bay~~	~~25~~	~~McGrath~~	~~70~~	~~Valdez~~	~~160~~
~~Cordova~~	~~100~~	~~Nenana~~	~~80~~	~~Whittier~~	~~300~~
~~Fairbanks~~	~~60~~	~~Nome~~	~~70~~	~~Wrangell~~	~~60~~
~~Fort Yukon~~	~~60~~	~~Palmer~~	~~50~~	~~Yakutat~~	~~150~~

~~For SI: 1 pound per square foot = 0.0479 kN/m2.~~

~~FIGURE 1608A.2 - Not shown for Clarity~~

SECTION 1609A
WIND LOADS

...

1609A.1.3 Story Drift for Wind Loads. *The calculated story drift due to wind pressures with ultimate design wind speed, V_{ult}, shall not exceed 0.008 times the story height for buildings less than 65 feet (19,812 mm) in height or 0.007 times the story height for buildings 65 feet (19,812 mm) or greater in height.*

Exception: ***[OSHPD 1 & 4]*** *This story drift limit need not be applied for single-story open structures.*

...

SECTION 1612A
FLOOD LOADS

...

1612A.3 Establishment of flood hazard areas. To establish *flood hazard areas*, the applicable governing authority shall adopt a flood hazard map and supporting data. The flood hazard map shall include, at a minimum, areas of special flood hazard as identified by the Federal Emergency Management ~~Agency in an engineering report entitled "The Flood Insurance Study for [INSERT NAME OF JURISDICTION]," dated [INSERT DATE OF ISSUANCE],~~ *Agency's Flood Insurance Study (FIS) adopted by the local authority having jurisdiction where the project is located*, as amended or revised with the accompanying Flood Insurance Rate Map (FIRM) and Flood Boundary and Floodway Map (FBFM) and related supporting data along with any revisions thereto. The adopted flood hazard map and supporting data are hereby adopted by reference and declared to be part of this section.

...

SECTION 1613A
EARTHQUAKE LOADS

1613A.1 Scope. Every structure, and portion thereof, including nonstructural components that are permanently attached to structures and their supports and attachments, shall be designed and constructed to resist the effects of earthquake motions in accordance with ASCE 7 *with all the modifications incorporated herein*, excluding Chapter 14 and Appendix 11A. The seismic design category for a structure ~~is permitted to~~ *shall* be determined in accordance with Section 1613A ~~or ASCE 7~~.

Exceptions:

~~1. Detached one- and two-family dwellings, assigned to Seismic Design Category A, B or C, or located where the mapped short-period spectral response acceleration, SS, is less than 0.4 g.~~

~~2. The seismic-force-resisting system of wood-frame buildings that conform to the provisions of Section 2308 are not required to be analyzed as specified in this section.~~

~~3. Agricultural storage structures intended only for incidental human occupancy.~~

Structures that require special consideration of their response characteristics and environment that are not addressed by this code or ASCE 7 and for which other regulations provide seismic criteria, such as vehicular bridges, electrical transmission towers, hydraulic structures, buried utility lines and their appurtenances and nuclear reactors.

1613A.2 Definitions. The following terms are defined in Chapter 2 *except those defined below which shall, for the purposes of this section, have the meanings shown herein. Definition provided in ASCE 7 Section 11.2 and* ***[OSHPD 1 & 4]*** *Section 3402A.1 ~~and ASCE 7 Section 11.2~~ shall apply when appropriate in addition to terms defined in this section.*

ACTIVE EARTHQUAKE FAULT. *A fault that has been the source of earthquakes or is recognized as a potential source of earthquakes, including those that have exhibited surface displacement within Holocene time (about 11,000 years) as determined by California Geological Survey (CGS) under the Alquist-Priolo Earthquake Fault Zoning Act, those included as type A or type B faults for the U.S. Geological Survey (USGS) National Seismic Hazard Maps, and faults considered to have been active in Holocene time by any authoritative source, Federal, State or Local Governmental Agency.*

BASE. *~~The level at which the horizontal seismic ground motions are considered to be imparted to the structure or the level at which the structure as a dynamic vibrator is supported. This level does not necessarily coincide with the ground level.~~ See ASCE 7.*

...

DISTANCE FROM AN ACTIVE EARTHQUAKE FAULT. *Distance measured from the nearest point of the building to the closest edge of an Alquist-Priolo Earthquake fault zone for an active fault, if such a map exists, or to the closest mapped splay of the fault.*

~~***HOSPITAL BUILDINGS.*** *Hospital buildings and all other medical facilities as defined in Section 1250, Health and Safety Code.*~~

GENERAL ACUTE CARE HOSPITAL. *See Section 1224.3.*

IRREGULAR STRUCTURE. *A structure designed as having one or more plan or vertical irregularities per ASCE 7 Section 12.3.*

...

~~***STRUCTURAL ELEMENTS.*** *Floor or roof diaphragms, decking, joists, slabs, beams, or girders, columns, bearing walls, retaining walls, masonry or concrete nonbearing walls exceeding one story in height, foundations, shear walls or other lateral-force-resisting members, and any other elements necessary to the vertical and lateral strength or stability of either the building as a whole or any of its parts, including connection between such elements.*~~

...

1613*A*.3 Seismic ground motion values. Seismic ground motion values shall be determined in accordance with this section.

1613A.3.1 Mapped acceleration parameters. The parameters S_s and S_1 shall be determined from the 0.2 and 1-second spectral response accelerations shown on Figures 1613.3.1(1) through 1613.3.1(8). ~~Where S_1 is less than or equal to 0.04 and S_s is less than or equal to 0.15, the structure is permitted to be assigned to Seismic Design Category A.~~

~~*(Figures 1613.3.1(1) through 1613.3.1(8) were struck out in the CBC 2013 and will not be shown in Chapter 16A. These figures are shown in Chapter 16.)*~~

...

1613*A*.3.5 Determination of seismic design category. Structures classified as Risk Category I, II or III that are located where the mapped spectral response acceleration parameter at 1-second period, S_1, is greater than or equal to 0.75 shall be assigned to Seismic Design Category E. Structures classified as Risk Category IV that are located where the mapped spectral response acceleration parameter at 1-second period, S_1, is greater than or equal to 0.75 shall be assigned to Seismic Design Category F. All other structures shall be assigned to *Seismic Design Category D.* ~~a seismic design category based on their occupancy category and the design spectral response acceleration coefficients, S_{DS} and S_{D1}, determined in accordance with Section 1613.5.4 or the site-specific procedures of ASCE 7. Each building and structure shall be assigned to the more severe seismic design category in accordance with Table 1613.5.6(1) or 1613.5.6(2), irrespective of the fundamental period of vibration of the structure, T.~~

~~TABLE 1613.3.5(1) - SEISMIC DESIGN CATEGORY BASED ON SHORT-PERIOD (0.2 second) RESPONSE ACCELERATIONS~~

~~VALUE OF S_{DS}~~	~~RISK CATEGORY~~		
	~~I or II~~	~~III~~	~~IV~~
~~$S_{DS} < 0.167g$~~	~~A~~	~~A~~	~~A~~
~~$0.167g \le S_{DS} < 0.33g$~~	~~B~~	~~B~~	~~C~~
~~$0.33g \le S_{DS} < 0.50g$~~	~~C~~	~~C~~	~~D~~
~~$0.50g \le S_{DS}$~~	~~D~~	~~D~~	~~D~~

~~TABLE 1613.3.5(2) - SEISMIC DESIGN CATEGORY BASED ON 1-SECOND PERIOD RESPONSE ACCELERATION~~

~~VALUE OF S_{D1}~~	~~RISK CATEGORY~~		
	~~I or II~~	~~III~~	~~IV~~
~~$S_{D1} < 0.067g$~~	~~A~~	~~A~~	~~A~~
~~$0.067g \le S_{D1} < 0.133g$~~	~~B~~	~~B~~	~~C~~
~~$0.133g \le S_{D1} < 0.20g$~~	~~C~~	~~C~~	~~D~~
~~$0.20g \le S_{D1}$~~	~~D~~	~~D~~	~~D~~

1613*A*.3.5.1 Alternative seismic design category determination. *Not permitted by OSHPD.* ~~Where S_1 is less than 0.75, the seismic design category is permitted to be determined from Table 1613.3.5(1) alone when all of the following apply:~~

~~1. In each of the two orthogonal directions, the approximate fundamental period of the structure, T_a, in each of the two orthogonal directions determined in accordance with Section 12.8.2.1 of ASCE 7, is less than 0.8 T_s determined in accordance with Section 11.4.5 of ASCE 7.~~

~~2. In each of the two orthogonal directions, the fundamental period of the structure used to calculate the story drift is less than T_s.~~

~~3. Equation 12.8-2 of ASCE 7 is used to determine the seismic response coefficient, C_s.~~

~~4. The diaphragms are rigid or are permitted to be idealized as rigid in accordance with Section 12.3.1 in ASCE 7 or for diaphragms permitted to be idealized as flexible in accordance with Section 12.3.1 of ASCE 7, the distance between vertical elements of the seismic force-resisting system does not exceed 40 feet (12 192 mm).~~

1613*A*.3.5.2 Simplified design procedure. *Not permitted by OSHPD.* ~~Where the alternate simplified design procedure of ASCE 7 is used, the seismic design category shall be determined in accordance with ASCE 7.~~

...

1613*A*.4.1 Additional seismic-force-resisting systems for seismically isolated structures. Add the following exception to the end of Section 17.5.4.2 of ASCE 7:

Exception: For isolated structures designed in accordance with this standard, the structural system limitations including the structural height limitations in Table 12.2-1 for ordinary steel concentrically braced frames (OCBFs) as defined in Chapter 11 and ~~ordinary~~ *intermediate* moment frames ~~(OMFs)~~ *(IMFs)* as defined in Chapter 11 are permitted to be taken as 160 feet (48 768 mm) for structures assigned to Seismic Design Category D, E or F, provided that the following conditions are satisfied:

1. The value of R_I as defined in Chapter 17 is taken as 1.

2. For ~~OMFs and~~ OCBFs, design is in accordance with AISC 341.

3. For IMFs, design is in accordance with AISC 341. In addition, requirements of Section E3.6e of AISC 341 shall be satisfied.

...

1613A.6 Ballasted photovoltaic panel systems. Ballasted, roof-mounted photovoltaic panel systems need not be rigidly attached to the roof or supporting structure. Ballasted non-penetrating systems shall be designed and installed only on roofs with slopes not more than one unit vertical in 12 units horizontal. Ballasted nonpenetrating systems shall be design to resist sliding and uplift resulting from lateral and vertical forces as required by Section 1605A, using a coefficient of friction determined by acceptable engineering principles. In structures assigned to Seismic Design Category ~~C,~~ D, E or F, ballasted nonpenetrating systems shall be designed to accommodate seismic displacement determined by nonlinear response history analysis or shake-table testing, using input motions consistent with ASCE 7 lateral and vertical seismic forces for nonstructural components on roofs.

[OSHPD 1 & 4] Ballasted photovoltaic panel systems shall be considered as an alternative system.

...

SECTION 1615A
STRUCTURAL INTEGRITY

1615A.1 General. High-rise buildings that are assigned to Risk Category III or IV shall comply with the requirements of this section. Frame structures shall comply with the requirements of Section 1615A.3. Bearing wall structures shall comply with the requirements of Section 1615A.4.

1615A.2 Definitions. The following words and terms are defined in Chapter 2 *except those defined below shall, for the purposes of this section, have the meanings shown herein.*

...

HIGH-RISE BUILDING. *A building with an occupied floor located more than 75 feet (22 860 mm) above the base.*

...

SECTION 1616A
MODIFICATIONS TO ASCE 7

1616A.1 General. *The text of ASCE 7 shall be modified as indicated in Sections 1616A.1.1 through 1616A.1.40 ~~1616A.1.42~~.*

1616A.1.1 ASCE 7, Section 1.3. *Modify ASCE 7 Section 1.3 by adding Section 1.3.6 as follows:*

1.3.6 Structural Design Criteria. *Where design is based on ASCE 7 Chapters 16, 17, or 18~~, and 31,~~ the ground motion, ~~wind tunnel design recommendations,~~ analysis and design methods, material assumptions, testing requirements, and acceptance criteria proposed by the engineer shall be submitted to the enforcement agency in the form of structural design criteria for approval.*

[OSHPD 1 & 4] *Peer review requirements in Section 3414A of this code shall apply to design reviews required by ASCE 7 Chapters 17 and 18.*

1616A.1.2 ASCE 7, Section 11.1.3. *Replace last paragraph of ASCE 7 Section 11.1.3 by the following:*

Buildings shall be designed and detailed in accordance with Chapter 12.

1616A.1.3 ASCE 7, Section 11.4.7. *Modify ASCE 7 Section 11.4.7 by adding the following:*

For buildings assigned to Seismic Design Category E or F, or when required by the building

official, a ground motion hazard analysis shall be performed in accordance with ASCE 7 Chapter 21 as modified by Section 1803A.6 of this code.

1616A.1.4 ASCE 7, Table 12.2 -1. *Modify ASCE 7 Table 12.2-1 as follows:*

A. BEARING WALL SYSTEMS

5. Intermediate Precast Shear Walls – Not permitted by OSHPD.

17. Light-framed walls with shear panels of all other materials – Not permitted by OSHPD.

B. BUILDING FRAME SYSTEMS

3. Steel ordinary concentrically braced frames – Not permitted by OSHPD.

8. Intermediate Precast Shear Walls – Not permitted by OSHPD.

24. Light-framed walls with shear panels of all other materials – Not permitted by OSHPD.

26. Special steel plate shear wall – Not permitted by OSHPD.

C. MOMENT RESISTING FRAME SYSTEMS

2. Steel special truss moment frames – Not permitted by OSHPD.

3. Steel intermediate moment frames – Not permitted by OSHPD.

4. Steel ordinary moment frames – Not permitted by OSHPD.

12. Cold-formed steel –special bolted moment frame - Not permitted by OSHPD.

Exception:

1) Systems listed in this section can be used as an alternative system when pre-approved by the enforcement agency.

2) Rooftop or other supported structures not exceeding two stories in height and 10 percent of the total structure weight can use the systems in this section when designed as components per ASCE 7 Chapter 13.

3) Systems listed in this section can be used for seismically isolated buildings, when permitted by Section 1613A.4.1.

1616A.1.5 ASCE 7, Section 12.2.3.1. *Replace ASCE 7 Section 12.2.3.1 Items # 1 and # 2 by the following:*

The value of the response modification coefficient, R, used for design at any story shall not exceed the lowest value of R that is used in the same direction at any story above that story. Likewise, the deflection amplification factor, C_d, and the system over strength factor, Ω_0, used for the design at any story shall not be less than the largest values of these factors that are used in the same direction at any story above that story.

1616A.1.6 ASCE 7, Section 12.2.3.2. *Modify ASCE 7 Section 12.2.3.2 by adding the following additional requirement:*

f. *Where design of elements of the upper portion is governed by special seismic load combinations, the special loads shall be considered in the design of the lower portion.*

1616A.1.7 [Reserved for DSA-SS]

1616A.1.8 [Reserved for DSA-SS]

1616A.1.9 [Reserved for DSA-SS]

1616A.1.10 ASCE 7, Section 12.3.3. *Modify first sentence of ASCE 7 Section 12.3.3.1 as follows:*

12.3.3.1 Prohibited Horizontal and Vertical Irregularities for Seismic Design Categories D through F. *Structures assigned to Seismic Design Category D, E, or F having horizontal structural irregularity Type 1b of Table 12.3-1 or vertical structural irregularities Type 1b, 5a or 5b of Table 12.3-2 shall not be permitted.*

1616A.1.11 ASCE 7, Section 12.7.2. *Modify ASCE 7 Section 12.7.2 by adding item 6 to read as follows:*

6. Where buildings provide lateral support for walls retaining earth, and the exterior grades on opposite sides of the building differ by more than 6 feet (1829 mm), the load combination of the seismic increment of earth pressure due to earthquake acting on the higher side, as determined by a Geotechnical engineer qualified in soils engineering plus the difference in earth pressures shall be added to the lateral forces provided in this section.

1616A.1.12 ASCE 7, Section 12.8.1.3. *Replace ASCE 7 Section 12.8.1.3 by the following:*

~~***12.8.1.3 Maximum S_s Value in Determination of C_s.*** *For regular structures five stories or less above the base as defined in Section 11.2 and with a period, T, of 0.5 s or less, C_S is permitted to be calculated using the larger of either S_S =1.5 or 80% of the value of S_S determined per Sections 11.4.1 or 11.4.7.*~~

12.8.1.3 Maximum S_{DS} Value in Determination of C_s and E_v
The value of C_s and E_v are permitted to be calculated using a value of S_{DS} equal to 1.0, but not less than 70% of S_{DS} as defined in Section 11.4.4, provided that all of the following criteria are met:

1. *The structure does not have irregularities, as defined in Section 12.3.2;*
2. *The structure does not exceed five stories above the base as defined in Section 11.2;*
3. *The structure has a fundamental period, T, that does not exceed 0.5 seconds, as determined using Section 12.8.2;*
4. *The structure meets the requirements necessary for the redundancy factor, ρ, to be permitted to be taken as 1.0, in accordance with Section 12.3.4.2;*
5. *The site soil properties are not classified as Site Class E or F, as defined in Section 11.4.2; and*
6. [Reserved for DSA-SS]
7. ***[OSHPD 1 & 4]*** *The structure is a nonconforming building not supporting SPC-3 or higher buildings.*

1616A.1.13 ASCE 7, Section 12.9.4. *Replace ASCE 7 Section 12.9.4 as follows:*

12.9.4 Scaling Design Values of Combined Response. *Modal base shears used to determine forces and drifts shall not be less than the base shears calculated using the equivalent lateral force procedure of section 12.8.*

1616A.1.14 ASCE 7, Section 12.10.2.1. *Replace ASCE 7 Exception 1. of Section 12.10.2.1 by the following:*

EXCEPTIONS:

1. The forces calculated above need not exceed those calculated using the load combinations with overstrength factor of Section 12.4.3.2 with seismic forces determined by Equation 12.10- 3 and transfer forces, where applicable.

1616A.1.15 ASCE 7, Section 12.12.3. [OSHPD 1 & 4] *Replace ASCE 7 Equation 12.12-1 by the following:*

$$\delta_M = C_d \delta_{max} \qquad \text{(Equation 12.12-1)}$$

1616A.1.16 ASCE 7, Section 12.13.1. *Modify ASCE 7 section 12.13.1 by adding Section 12.13.1.1 as follows:*

12.13.1.1 Foundations and superstructure-to-foundation connections. *The foundation shall be capable of transmitting the design base shear and the overturning forces from the structure into the supporting soil. Stability against overturning and sliding shall be in accordance with Section 1605A.1.1.*

In addition, the foundation and the connection of the superstructure elements to the foundation shall have the strength to resist, in addition to gravity loads, the lesser of the following seismic loads:

1. The strength of the superstructure elements.

2. The maximum forces that ~~would occur~~ can be delivered to the foundation in ~~the~~ a fully yielded structural system.

3. Forces from the Load Combinations with overstrength factor in accordance with ASCE 7 Section 12.4.3.2.

Exceptions:

1. Where reference standards specify the use of higher design loads.

2. When it can be demonstrated that inelastic deformation of the foundation and superstructure-to-foundation connection will not result in a weak story or cause collapse of the structure.

3. Where ~~basic structural system~~ seismic force-resisting system consists of light framed walls with shear panels, unless the reference standard specifies the use of higher design loads.

Where the computation of the seismic overturning moment is by the equivalent lateral-force method or the modal analysis method, reduction in overturning moment permitted by section 12.13.4 of ASCE 7 may be used.

Where moment resistance is assumed at the base of the superstructure elements, the rotation and flexural deformation of the foundation as well as deformation of the superstructure-to-foundation connection shall be considered in the drift and deformation compatibility analyses.

1616A.1.17 ASCE 7, Section 13.1.3. [OSHPD 1 & 4] *Modify ASCE 7 Section 13.1.3 by the following:*

The design of supports and attachments for all nonstructural components shall have a component importance factor, I_p, equal to 1.5.

Exception: *Freestanding skilled nursing or acute psychiatric buildings, not providing services/systems, utilities, or access/egress to general acute care buildings designated as SPC 3 or higher in accordance with Chapter 6 of the California Administrative Code, shall be permitted to use component importance factor, I_p, as shown in Table 1616A.1.17.*

TABLE 1616A.1.17
COMPONENT IMPORTANCE FACTOR (I_P)[1] FOR
FREESTANDING SKILLED NURSING AND ACUTE PSYCHIATRIC BUILDINGS

Description	Importance Factor (I_p)[1]
Architectural components	1.0
Mechanical and electrical components	1.5
Medical devices	1.5
Piping, including in-line components	1.5
HVAC ducts, including in-line components	1.0
Electrical raceways	1.0

[1]*Components required for life-safety purposes after an earthquake, including emergency and standby power systems, mechanical smoke removal systems, fire protection sprinkler systems, fire alarm control panels, and egress stairways shall have a component importance factor (I_p) of 1.5.*

...

1616A.1.18 ASCE 7, Section 13.1.4. *Replace ASCE 7 Section 13.1.4 with the following:*

13.1.4 Exemptions. *The following nonstructural components are exempt from the requirements of this section:*

1. *Furniture (except storage cabinets as noted in Table 13.5-1).*
2. *Temporary or moveable (mobile) equipment.*

Exceptions:

a) *Equipment shall be anchored if it is permanently attached to the building utility services such as electricity, gas, or water. For the purposes of this requirement, "permanently attached" shall include all electrical connections except plugs for duplex receptacles.*

b) *The enforcement agency shall be permitted to require temporary attachments for movable equipment which is usually stationed in one place and heavier than 400 pounds or has a center of mass located 4 feet (1.22 m) or more above the adjacent floor or roof level that directly support the component, when they are not in use for a period longer than 8 hours at a time.*

3. *Architectural, mechanical and electrical components in Seismic Design Categories D, E, or F where all of the following apply:*

a. *The component is positively attached to the structure;*
b. *Flexible connections are provided at seismic separation joints and between the component and associated ductwork, piping, and conduit; and either:*

i. *The component weighs 400 pounds (1780 N) or less and has a center of mass located 4 feet (1.22 m) or less above the adjacent floor or roof level that directly support the component;*

Exception: *Special Seismic Certification requirements of this code in accordance with Section 1705A.13.3 ~~1705A.12.4~~ shall be applicable.*

or

ii. The component weighs 20 pounds (89 N) or less or, in the case of a distributed system, 5 lb/ft (73 N/m) or less.

Exception: *The enforcement agency shall be permitted to require attachments for equipment with hazardous contents to be shown on construction documents irrespective of weight.*

1616A.1.19 ASCE 7, Section 13.4. *Replace ASCE 7 Section 13.4.2.3 with the following:*

13.4.2.3 Prequalified ~~P~~ post-installed anchors and specialty inserts in Concrete and Masonry.
Post-installed anchors and specialty inserts in concrete that are ~~used for component anchorage shall be~~ pre-qualified for seismic applications in accordance with ACI 355.2, ACI 355.4, ICC-ES AC193, ICC-ES AC232, ~~or~~ ICC-ES AC308 or ICC-ES AC446 shall be permitted. Post-installed anchors in masonry ~~used for component anchorage~~ shall be pre-qualified for seismic applications in accordance with ICC-ES AC01, AC58, or AC106.

Use of screw anchors shall be limited to dry interior conditions and shall not be used in building enclosures. Re-use of screw anchors or screw anchor holes shall not be permitted.

1616A.1.20 ASCE 7, Section 13.4.5 *Modify ASCE 7 Section 13.4.5 by adding Section 13.4.5.1 as follows:*

~~Replaced from Section 1908A.1.1~~ 13.4.5.1 ~~1908A.1.1~~ Power Actuated Fasteners:
Power actuated fasteners qualified in accordance with ICC-ES AC 70 shall be deemed to satisfy the requirements of Section 13.4.5. ~~this section.~~

Power actuated fasteners shall be permitted in seismic shear for components exempt from permit requirements by Section 1616A.1.18 of this code and for interior non-bearing non-shear wall partitions only. Power actuated fastener shall not be used to anchor seismic bracing, exterior cladding or curtain wall systems.

Exception: *Power actuated fasteners in steel to steel connections prequalified for seismic application by cyclic tests in accordance with ICC-ES AC 70 shall be permitted for seismic design.*

1616A.1.21 ~~1616A.1.20~~ ASCE 7, Section 13.5.6. *Replace ASCE 7, Section 13.5.6 with the following:*

13.5.6 Suspended Ceilings. *Suspended ceilings shall be in accordance with this section.*

13.5.6.1 Seismic Forces. *The weight of the ceiling, W_p, shall include the ceiling grid; ceiling tiles or panels; light fixtures if attached to, clipped to, or laterally supported by the ceiling grid; and other components that are laterally supported by the ceiling. W_p shall be taken as not less than 4 psf (19 N/m^2).*

The seismic force, F_p, shall be transmitted through the ceiling attachments to the building structural elements or the ceiling-structure boundary.

13.5.6.2 Seismic Design Requirements. *Suspended acoustical tile or lay-in panel ceilings shall be designed in accordance with ASTM E 580 Section 5.2.8 and the requirements of*

Sections 13.5.6.2.1 and 13.5.6.2.2, or be designed in accordance with Section 13.2.1.1, or be seismically qualified in accordance with Sections 13.2.5 or 13.2.6.

13.5.6.2.1. Industry Standard Construction for Acoustical Tile or Lay-In Panel Ceilings. *Acoustical tile or lay-in panel ceilings in Seismic Design Categories D, E, and F shall be designed and installed in accordance with ASTM C635, ASTM C636, and ASTM E 580, Section 5 - Seismic Design Categories D, E, and F as modified by Section 13.5.6.2.2.*

Exception to Section 13.5.8.1 shall not be used in accordance with ASTM E 580 Section 5.5.

13.5.6.2.2 Modification to ASTM E 580. *Modify ASTM E 580 by the following:*

1. ***Exitways.*** *Lay-in ceiling assemblies in exitways of hospitals shall be installed with a main runner or cross runner surrounding all sides of each piece of tile, board or panel and each light fixture or grille. A cross runner that supports another cross runner shall be considered as a main runner for the purpose of structural classification. Splices or intersections of such runners shall be attached with through connectors such as pop rivets, screws, pins, plates with end tabs or other approved connectors. Lateral force diagonal bracing may be omitted in the short or transverse direction of exitways, not exceeding 8 feet wide, when perimeter support in accordance with ASTM E 580 Sections 5.2.2 and 5.2.3 is provided and the perimeter wall laterally supporting the ceiling in the short or transverse direction is designed to carry the ceiling lateral forces. The connections between the ceiling grid, wall angle and the wall shall be designed to resist the ceiling lateral forces.*

2. ***Corridors and Lobbies.*** *Expansion joints shall be provided in the ceiling at intersections of corridors and at junctions of corridors and lobbies or other similar areas.*

3. ***Lay-in panels.*** *Metal panels and panels weighing more than 1/2 pounds per square foot (24 N/m^2) other than acoustical tiles shall be positively attached to the ceiling suspension runners.*
4. ***Lateral force bracing.*** *Lateral force bracing is required for all ceiling areas except that they shall be permitted to be omitted in rooms with floor areas up to 144 square feet when perimeter support in accordance with ASTM E 580 Sections 5.2.2 and 5.2.3 are provided and perimeter walls are designed to carry the ceiling lateral forces. The connections between the ceiling grid, wall angle and the wall shall be designed to resist the ceiling lateral forces. Horizontal restraint point spacing shall be justified by analysis or test and shall not exceed a spacing of 12 feet by 12 feet. ~~Restraint~~ Bracing wires shall be secured with four tight twists in 1 1/2 inches, or an approved alternate connection.*
5. *Ceiling support and bracing wires shall be spaced a minimum of 6" from all pipes, ducts, conduits and equipment that are not braced for horizontal forces, unless approved otherwise by the building official.*

~~5. **Ceiling fixtures.** Fixtures installed in acoustical tile or lay-in panel ceilings shall be mounted in a manner that will not compromise ceiling performance. All recessed or drop-in light fixtures and grilles shall be supported directly from the fixture housing to the structure above with a minimum of two 12 gage wires located at diagonally opposite corners. Leveling and positioning of fixtures may be provided by the ceiling grid. Fixture support wires may be slightly loose to allow the fixture to seat in the grid system. Fixtures shall not be supported from main runners or cross runners if the weight of the fixtures causes the total dead load to exceed the deflection capability of the ceiling suspension system.~~

~~*Fixtures shall not be installed so that the main runners or cross runners will be eccentrically loaded.*~~

~~*Surface-mounted fixtures shall be attached to the main runner with at least two positive clamping devices made of material with a minimum of 14 gage. Rotational spring catches do not comply. A 12 gage suspension wire shall be attached to each clamping device and to the structure above.*~~

~~*6. **Partitions.** Where the suspended ceiling system is required to provide lateral support for the permanent or relocatable partitions, the connection of the partition to the ceiling system, the ceiling system members and their connections, and the lateral force bracing shall be designed to support the reaction force of the partition from prescribed loads applied perpendicular to the face of the partition. Partition connectors, the suspended ceiling system and the lateral force bracing shall all be engineered to suit the individual partition application and shall be shown or defined in the drawings or specifications.*~~

1616A.1.22 ~~***1616A.1.21***~~ ***ASCE 7, Section 13.5.7. [OSHPD 1 & 4]*** *Modify ASCE 7 Section 13.5.7 by the following:*

All access floors shall be special access floors in accordance with Section 13.5.7.2.

1616A.1.23 ~~***1616A.1.22***~~ ***ASCE 7 Tables 13.5-1 and 13.6-1.*** *Modify ASCE 7, Tables 13.5-1 & 13.6-1 by the following:*

1. *For components with R_p greater than 1.5, overstrength factor (Ω_0) for design of anchorage to concrete and vibration isolators along with associated snubbers/connections shall be 2.0.*
2. *For Exterior Nonstructural Wall Elements and Connections, overstrength factor (Ω_0) shall be 1.0.*

1616A.1.24 ~~***1616A.1.23***~~ ***ASCE 7, Section 13.6.5.*** *Modify ASCE 7, Section 13.6.5.6 Exceptions 1 and 2 as follows:*

Exceptions:

1. *Design for the seismic forces of Section 13.3 shall not be required for raceways where either:*

   a. *Trapeze assemblies are used to support raceways and the total weight of the raceway supported by trapeze assemblies is less than 10 lb/ft (146 N/m), or*
   b. *The raceway is supported by hangers and each hanger in the raceway run is 12 in. (305 mm) or less in length from the raceway support point to the supporting structure. Where rod hangers are used with a diameter greater than 3/8 inch, they shall be equipped with swivels to prevent inelastic bending in the rod.*

2. *Design for the seismic forces of Section 13.3 shall not be required for conduit, regardless of the value of I_p, where the conduit is less than 2.5 in. (64 mm) trade size.*

1616A.1.25 ~~***1616A.1.24***~~ ***ASCE 7, Section 13.6.7.*** *Replace ASCE 7, Section 13.6.7 Exceptions 1 and 2 with the following:*

Exceptions:

The following exceptions pertain to ductwork not designed to carry toxic, highly toxic, or flammable gases or used for smoke control:

1. Design for the seismic forces of Section 13.3 shall not be required for ductwork where either:

a. *Trapeze assemblies are used to support ductwork and the total weight of the ductwork supported by trapeze assemblies is less than 10 lb/ft (146 N/m); or*
b. *The ductwork is supported by hangers and each hanger in the duct run is 12 in. (305 mm) or less in length from the duct support point to the supporting structure. Where rod hangers are used with a diameter greater than 3/8 inch, they shall be equipped with swivels to prevent inelastic bending in the rod.*

2. Design for the seismic forces of Section 13.3 shall not be required where provisions are made to avoid impact with larger ducts or mechanical components or to protect the ducts in the event of such impact; and HVAC ducts have a cross-sectional area of 6 ft^2 (0.557 m^2) or less, or weigh 10 lb/ft (146 N/m) or less.

~~***1616A.1.25 ASCE 7, Section 13.6.8.2.*** *Modify ASCE 7, Section 13.6.8.2 by adding Exception as follows:*~~

~~*Anchor capacities shall be determined in accordance with material chapters of this code in lieu of using those in NFPA 13 and demand shall be based on ASCE 7.*~~

1616A.1.26 ASCE 7, Section 13.6.8.3. *Replace ASCE 7, Section 13.6.8.3 with the following:*

13.6.8.3 Exceptions. *Design of piping systems and attachments for the seismic forces of Section 13.3 shall not be required where one of the following conditions apply:*

1. *Trapeze assemblies are used to support piping whereby no single pipe exceeds the limits set forth in 3a. or b. below and the total weight of the piping supported by the trapeze assemblies is less than 10 lb/ft (146 N/m).*

2. *The piping is supported by hangers and each hanger in the piping run is 12 in. (305 mm) or less in length from the top of the pipe to the supporting structure. Where pipes are supported on a trapeze, the trapeze shall be supported by hangers having a length of 12 in. (305 mm) or less. Where rod hangers are used with a diameter greater than 3/8 inch, they shall be equipped with swivels to prevent inelastic bending in the rod.*

3. *Piping having an R_p in Table 13.6-1 of 4.5 or greater is used and provisions are made to avoid impact with other structural or nonstructural components or to protect the piping in the event of such impact and where the following size requirements are satisfied:*

   a. For Seismic Design Categories D, E, or F and values of I_p greater than one, the nominal pipe size shall be 1 inch (25 mm) or less.
   b. For Seismic Design Categories D, E, or F, where I_p = 1.0 the nominal pipe size shall be 3 inches (80 mm) or less.

The exceptions above shall not apply to elevator piping.

1616A.1.27 ASCE 7, Section 13.6.10.1. *Modify ASCE 7 Section 13.6.10.1 by adding Section 13.6.10.1.1 as follows:*

13.6.10.1.1 Elevators guide rail support. *The design of guide rail support-bracket fastenings and the supporting structural framing shall use the weight of the counterweight or maximum weight of the car plus not less than 40 percent of its rated load. The seismic forces shall be assumed to be distributed one third to the top guiding members and two thirds to the bottom guiding members of cars and counterweights, unless other substantiating data are provided. In addition to the requirements of ASCE 7 Section 13.6.10.1, the minimum seismic forces shall be 0.5g acting in any horizontal direction.*

1616A.1.28 ASCE 7, Section 13.6.10.4. *Replace ASCE 7, Section 13.6.10.4 as follows:*

13.6.10.4 Retainer plates. *Retainer plates are required at the top and bottom of the car and counterweight, except where safety devices acceptable to the enforcement agency are provided which meet all requirements of the retainer plates, including full engagement of the machined portion of the rail. The design of the car, cab stabilizers, counterweight guide rails and counterweight frames for seismic forces shall be based on the following requirements:*

1. *The seismic force shall be computed per the requirements of ASCE 7 13.6.10.1. The minimum horizontal acceleration shall be 0.5g for all buildings.*

2. *W_p shall equal the weight of the counterweight or the maximum weight of the car plus not less than 40 percent of its rated load.*

3. *With the car or counterweight located in the most adverse position, the stress in the rail shall not exceed the limitations specified in these regulations, nor shall the deflection of the rail relative to its supports exceed the deflection listed below:*

RAIL SIZE (weight per foot of length, pounds)	WIDTH OF MACHINED SURFACE (inches)	ALLOWABLE RAIL DEFLECTION (inches)
8	1 ¼	0.20
11	1 ½	0.30
12	1 ¾	0.40
15	1 31/32	0.50
18 ½	1 31/32	0.50
22 ½	2	0.50
30	2 ¼	0.50

For SI: 1 inch = 25 mm, 1 foot = 305 mm.

NOTE: Deflection limitations are given to maintain a consistent factor of safety against disengagement of retainer plates from the guide rails during an earthquake.

4. *Where guide rails are continuous over supports and rail joints are within 2 feet (610 mm) of their supporting brackets, a simple span may be assumed.*

5. *The use of spreader brackets is allowed.*

6. *Cab stabilizers and counterweight frames shall be designed to withstand computed lateral load with a minimum horizontal acceleration of 0.5g.*

1616A.1.29 ASCE 7, Section 16.1.4. *Remove ASCE 7 Sections 16.1.4.1 and 16.1.4.2 and modify Section 16.1.4 by the following:*

Maximum scaled base shears used to determine forces and drifts shall not be less than the base shears calculated using the equivalent lateral force procedure of Section 12.8.

1616A.1.30 ASCE 7, Section 16.2.2. *Modify ASCE 7 Section 16.2.2 by adding the following:*

Requirements of this section shall be deemed to be satisfied for new buildings, using acceptance criteria in Section 16.2.4.2, by the nonlinear modeling parameters in ASCE 41.

1616A.1.31 ASCE 7, Section 16.2.3. *Modify ASCE 7 Section 16.2.3 by adding the following:*

Requirements of this section shall be deemed to be satisfied by using load combinations in Sections 12.4.2.3 and 12.4.3.2 with 25% of the required live loads.

1616A.1.32 ASCE 7, Section 16.2.4. *Modify ASCE 7 Section 16.2.4 by the following:*

a) Where site is located within 3.1 miles (5 km) of an active fault at least seven ground motions shall be analyzed and response parameters shall be based on larger of the average of the maximum response with ground motions applied as follows:

1. *Each of the ground motions shall have their maximum component at the fundamental period aligned in one direction.*
2. *Each of the ground motion's maximum component shall be rotated orthogonal to the previous analysis direction.*

b) Where site is located more than 5 km from an active fault at least 10 ground motions shall be analyzed. The ground motions shall be applied such that one-half shall have their maximum component aligned in one direction and the other half aligned in the orthogonal direction. The average of the maximum response of all the analyses shall be used for design.

1616A.1.33 ASCE 7, Section 16.2.4.1. [OSHPD 1 & 4] *Replace ASCE 7 exception to Section 16.2.3 by the following:*

Where this standard requires the consideration of the load combinations with overstrength factor of Section 12.4.3.2, average demand from MCE_R analysis obtained from suite of analysis in accordance with Section 16.2.4 shall be used with Immediate Occupancy (IO) acceptance criteria in Section 16.2.4.2.

1616A.1.34 ASCE 7, Section 16.2.4.2. [OSHPD 1 & 4] *Modify ASCE 7 Section 16.2.4.2 by the following:*

Acceptance criteria for elements subjected to deformation beyond their linear range of response shall be based on ASCE 41 for Immediate Occupancy (IO) at Design Earthquake (DE) and Life Safety (LS) at Risk-Targeted Maximum Considered Earthquake (MCE_R). ~~For LS acceptance criteria at MCE_R, primary components shall be within the acceptance criteria for primary components and secondary components shall be within the acceptance criteria for secondary components.~~

~~***1616A.1.35 ASCE 7, Section 17.2.1.*** *Modify ASCE 7, Section 17.2.1 by adding the following:*~~

~~*The importance factor, I_p, for parts and portions of a seismic-isolated building shall be the same as that required for a fixed-base building of the same risk category.*~~

1616A.1.35 ~~***1616A.1.36***~~ ***ASCE 7 Section 17.2.4.7.*** *Modify ASCE 7, Section 17.2.4.7 by adding the following:*

The effects of uplift ~~and/or rocking~~ shall be explicitly accounted for ~~in the analysis and~~ in the testing of the isolator units.

~~***1616A.1.37 ASCE 7, Section 17.2.5.2.*** *Modify ASCE 7, Section 17.2.5.2 by adding the following:*~~

~~*The separation requirements for the building above the isolation system and adjacent buildings shall be the sum of the factored displacements for each building. The factors to be used in determining separations shall be:*~~

~~*1. For seismically isolated buildings, the deformation resulting from the analyses using the Risk-Targeted Maximum Considered Earthquake unmodified by R_I.*~~
~~*2. For fixed based buildings, C_d times the elastic deformations resulting from an equivalent static analysis using the seismic base shear computed via ASCE 7, Section 12.8.*~~

1616A.1.36 ~~***1616A.1.38***~~ ***ASCE 7, Section 17.4.*** *Modify ASCE 7, Section 17.4.2 by adding the following:*

17.4.2.3 Linear Procedure. *Linear procedures shall not be used in Seismic Design Category E and F structures.* ~~*be limited to structures located at sites where mapped value of S_1 is less than 0.6g.*~~

1616A.1.37 ~~***1616A.1.39***~~ ***ASCE 7, Section*** *17.6 Modify ASCE 7, Section 17.6 by adding the following:*

17.6.1.1 Minimum Seismic Force. *For the response spectrum and linear response history procedures, V_b and V_s, shall not be taken less than those calculated in accordance with Equations 17.5-7 and 17.5-8.*

1616A.1.38 ~~***1616A.1.40***~~ ***ASCE 7, Section 18.3.1.*** *Modify ASCE 7, Section 18.3.1 by replacing the third paragraph with the following:*

If the calculated force in an element of the seismic force resisting system does not exceed 1.5 times its nominal strength for the Risk-Targeted Maximum Considered Earthquake (MCE_R) nor its nominal strength for the Design Earthquake (DE), the element is permitted to be modeled as linear. For this section, the MCE_R and DE response shall be based on largest response due to a single ground motion and not the average response of suite of ground motions.

1616A.1.39 ~~***1616A.1.41 Earthquake Motion Measuring Instrumentation and Monitoring.***~~ ***Post-Earthquake Structural Verification. [OSHPD 1 & 4]*** *Modify ASCE 7 by the following:*

Scope: *For buildings with* ~~*a Seismic Isolation System, a Damping System or a Lateral Force Resisting System (LFRS) not listed in ASCE 7 Table 12.2-1, earthquake motion measuring instrumentation and installed by the owner and monitoring shall be required. Monitoring requirements shall also apply to*~~ *welded steel moment frames* ~~*buildings*~~ *constructed under a permit issued prior to October 25, 1994 post earthquake verification shall be in accordance with this section.*

~~***Instrumentation:*** *There shall be a sufficient number of instruments to characterize the response of the building during an earthquake and shall include at least one tri-axial free field instrument or equivalent. A proposal for instrumentation and equipment specifications shall be forwarded to the enforcement agency for review and approval.*~~

~~*The instruments shall be interconnected for common start and common timing. Each instrument shall be located so that access is maintained at all times and is unobstructed by room contents. A sign stating "MAINTAIN CLEAR ACCESS TO THIS INSTRUMENT" shall be posted in a conspicuous location.*~~

~~*The owner of the building shall be responsible for the implementation of the instrumentation program. Maintenance of the instrumentation and removal /processing of the records shall be the responsibility of the enforcement agency.*~~

~~***Monitoring:*** *After every significant seismic event, where the ground shaking acceleration at the site exceeds 0.3g, or the acceleration at any monitored building level exceeds 0.8g, as measured by the seismic monitoring system in the building, the owner shall retain a structural engineer to make an inspection of the structural system. The inspection shall include viewing the performance of the building, reviewing the strong motion records, and a visual examination of the isolators, dampers, and their connections for deterioration, offset or physical damage. A report for each inspection, including conclusions on the continuing adequacy of the structural system, shall be submitted to the enforcement agency.*~~

Verification: *After every seismic event that generates ground motions specified in the California Administrative Code, Chapter 6, Section 4.2.0.1 or the damage indicators specified in the California Administrative Code, Chapter 6, Section 4.2.0.2 at a welded steel moment frame building constructed under a permit issued prior to October 25, 1994, the owner shall retain a*

structural engineer to perform detailed joint evaluations required to meet the following requirements:

1. A detailed joint evaluation program shall be submitted to the enforcement agency for approval prepared in accordance with the requirements of the California Administrative Code, Chapter 6, Section 4.2.0.3.

2. Upon approval of the joint evaluation program required by Item 1 above for the joint inspections, a project to perform the joint inspections, detailed in the program, shall be submitted and a building permit shall be obtained by the owner no later than 6 months from the date of occurrence of the seismic event.

***Exception:** Where the ground motions at the building site are less than 0.4g, the permit shall be obtained no later than 12 months from the date of occurrence of the seismic event.*

3. A detailed joint evaluation report shall be submitted to the enforcement agency no later than 6 months of obtaining the building permit. The report shall document the findings from the inspections of the joints and include conclusions on the adequacy of the structural system. Where unsafe conditions are discovered, the provisions of Section 116 shall apply.

Where the detailed joint evaluation report is not submitted within the timeframes specified above, the building shall not be issued a building permit for any projects except for those for seismic compliance, maintenance and repair until the detailed joint evaluation work is complete.

1616A.1.40 ~~1616A.1.42~~ Operational Nonstructural Performance Level Requirements. ***[OSHPD 1 & 4]*** *New general acute care hospitals and new building(s) required for general acute care services shall satisfy Operational Nonstructural Performance Level (NPC-5) requirements.*

***Exception:** A new building which is required for general acute care services that is added to an existing general acute care hospital and which has a building area of 4,000 square feet (371 m^2) or less, need not satisfy the NPC-5 requirements until the deadline specified in California Administrative Code (Part 1, Title 24 CCR), Chapter 6.*

Hospitals and buildings designed and constructed to the provisions of this code for new construction shall be deemed to satisfy Operational Nonstructural Performance Level (NPC-5) requirements when:

1. *The facility has on-site supplies of water and holding tanks for sewage and liquid waste, sufficient to support 72 hours of emergency operations for the hospital or building, which are integrated into the building plumbing systems in accordance with the California Plumbing Code.*

2. *An on-site emergency system as defined in the California Electrical Code is incorporated into the building electrical system for critical care areas. Additionally, the system shall provide for radiological service and an onsite fuel supply for 72 hours of acute care operation.*

   Emergency and standby generators shall not be located below the higher of the Design Flood Elevation (DFE) or Base Flood Elevation (BFE) plus two feet (BFE + 2 ft.) or 500 year flood elevation, whichever is higher, and shall be located at an elevation close to grade for easy accessibility from outside for maintenance.

All existing amendments that are not revised above shall continue without any change.

NOTATION:
Authority: Health and Safety Code Section 130005(g) & 130021
Reference: Health and Safety Code Section 1275, 129790, 129850 & 130005(g)

CHAPTER 17
SPECIAL INSPECTIONS AND TESTS

SECTION 1701
GENERAL

1701.1 Scope. The provisions of this chapter shall govern the quality, workmanship and requirements for materials covered. Materials of construction and tests shall conform to the applicable standards listed in this code.

...

SECTION 1703
APPROVALS

...

1703.4 Performance. Specific information consisting of test reports conducted by an approved agency in accordance with the appropriate referenced standards, or other such information as necessary, shall be provided for the building official to determine that the product, material or assembly meets the applicable code requirements.

[OSHPD 2] Tests performed by an independent approved testing agency/laboratory having accreditation to the International Standards Organization (ISO) accreditation Standard 17025 or under the responsible charge of a competent approved independent Registered Design Professional shall be deemed to comply with requirements of this section. Test reports for structural tests shall be reviewed and accepted by an independent California licensed structural engineer.

...

SECTION 1704
SPECIAL INSPECTIONS AND TESTS, CONTRACTOR RESPONSIBILITY AND STRUCTURAL OBSERVATION

...

1704.2 Special inspections and tests. Where application is made to the building official for construction as specified in section 105, the owner or the owners authorized agent, other than the contractor, shall employ one or more *approved agencies* to provide special inspections and tests during construction on the types of work specified in Section 1705 and identify the approved agencies to the building official. These special inspections and tests are in addition to the inspections by the building official that are identified in Section 110.

[OSHPD 2] An inspection agency having accreditation to the International Standards Organization (ISO) accreditation Standard 17020 shall be deemed to comply with the requirements for an approved inspection agency.

...

Exceptions:

...

3. Special inspections and tests are not required for portions of structures designed and constructed in accordance with the cold-formed steel light-frame construction provisions of Section 2211.7 or the conventional light-frame construction provisions of Section 2308. *[OSHPD 2] Not permitted by OSHPD.*

...

SECTION 1705
REQUIRED SPECIAL INSPECTIONS AND TESTS

...

1705.5.3 [OSHPD 2] Manufactured Trusses and Assemblies. *The fabrication of trusses and other assemblages constructed using wood and metal members, or using light metal plate connectors, shall be continuously inspected by an approved agency. ~~a qualified inspector approved by the enforcement agency.~~ The ~~inspector~~ approved agency shall furnish the architect, structural engineer and the enforcement agency with a report that the lumber species, grades and moisture content; type of glue, temperature and gluing procedure; type of metal members and metal plate connectors; and the workmanship conform in every material respect with the duly approved construction documents. ~~plans and specifications.~~ Each inspected truss shall be stamped by the approved agency ~~inspector~~ with an identifying mark.*

...

1705.13.3 Designated Seismic System. For structures assigned to *Seismic design* Category C, D, E or F and with *designated seismic systems* that are subject to the requirements of Section 13.2.2 of ASCE 7 for certification, the *registered design professional* shall specify on the *approved construction documents* the requirements to be met by analysis, testing or experience data as specified therein. *Certificate of compliance* documenting that the requirements are met shall be submitted to the building official as specified in Section 1704A.5.

1705.13.3.1 Special Seismic Certification. *[OSHPD 2]*

1. *Special seismic certification shall be required for life-safety components, such as emergency and standby power systems, mechanical smoke removal systems, and fire sprinkler/fire protection systems.*
2. *Equipment and components supporting sub-acute bed(s) shall have special seismic certification in accordance with Section 1705A.*

Construction documents for OSHPD 2 buildings without sub-acute beds shall explicitly state that skilled nursing facility or intermediate care facility does not admit patients needing sustained electrical life-support equipment.

...

[All existing amendments that are not revised above shall continue without any change.]

NOTATION:
Authority: Health and Safety Code Section 129850
Reference: Health and Safety Code Sections 1275, 129850 and 129790

CHAPTER 17A
SPECIAL INSPECTIONS AND TESTS

SECTION 1701A
GENERAL

1701A.1 Scope. The provisions of this chapter shall govern the quality, workmanship and requirements for materials covered. Materials of construction and tests shall conform to the applicable standards listed in this code.

1701A.1.1 Application. *The scope of application of Chapter 17A is as follows:*

1. *[Reserved for DSA]*

2. *Structures regulated by the Office of Statewide Health Planning and Development (OSHPD), which include those applications listed in Section 1.10.1, and 1.10.4. These applications include hospitals, skilled nursing facilities, intermediate care facilities and correctional treatment centers.*

   Exception: [OSHPD 2] *Single-story Type V skilled nursing or intermediate care facilities utilizing wood-frame or light-steel-frame construction as defined in Health and Safety Code Section 129725, which shall comply with Chapter 17 and any applicable amendments therein.*

1701A.1.2 Amendments in this chapter. *OSHPD adopt this chapter and all amendments.*

Exception: *Amendments adopted by only one agency appear in this chapter preceded with the appropriate acronym of the adopting agency, as follows:*

1. *[Reserved for DSA]*

2. *Office of Statewide Health Planning and Development:*
   [OSHPD 1] *- For applications listed in Section 1.10.1.*
   [OSHPD 4] *- For applications listed in Section 1.10.4.*

...

1701A.3 ~~***1701A.4***~~ ***Special*** ~~***inspectors***~~ ***inspections and tests. [OSHPD 1 and 4]*** *In addition to the inspector(s) of record required by the California Administrative Code, Section 7-144, the owner shall employ one or more approved agencies to provide special inspections and tests* ~~*special inspectors who shall provide inspections*~~ *during construction on the types of work listed under Chapters 17A, 18A, 19A, 20, 21A, 22A, 23, 24, 25, 34A, and noted in the Test, Inspection, and Observation (TIO) program required by Sections 7-141, 7-145 and 7-149 of the California Administrative Code. Test, Inspection, and Observation (TIO) program shall satisfy requirements of Section* ~~*s*~~ *1704A.* ~~*2.3 and 1704A.5.*~~

...

SECTION 1702A
DEFINITIONS

1702A.1 Definitions. The following terms are defined in Chapter 2 *except those defined below which shall, for the purposes of this* ~~*section*~~ *chapter, have the meanings shown herein.*

...

Quality Assurance *(QA). Special inspections and testing provided by an approved agency employed by the Owner. Project specific testing required by approved construction documents shall be performed by the approved agency responsible for Quality Assurance (QA), unless approved otherwise by the building official.*

Quality Control (QC). *Inspections and materials/functionality testing provided by the fabricator, erector, manufacturer or other responsible contractor as applicable.*

...

SPECIAL INSPECTION.

Continuous special inspection. *The full-time observation of work requiring special inspection by a special inspector who is present in the area where the work is being performed.*

Periodic special inspection. *The part-time or intermittent observation of work requiring special inspection by a special inspector who is present in the area where the work has been or is being performed and at the completion of the work.*

...

SECTION 1703*A*
APPROVALS

...

1703*A*.4 Performance. Specific information consisting of test reports conducted by an approved agency in accordance with the appropriate referenced standards, or other such information as necessary, shall be provided for the building official to determine that the product, material or assembly meets the applicable code requirements.

~~Relocated from Section 1705A.12.3~~ ***[OSHPD 1 & 4]*** *~~All~~ Tests ~~shall be~~ performed by an independent approved testing agency/laboratory having accreditation to the International Standards Organization (ISO) accreditation Standard 17025 or ~~shall be~~ under the responsible charge of a ~~an~~ competent approved independent Registered Design Professional ~~California licensed engineer~~ shall be deemed to comply with requirements of this section. Test reports for structural tests shall be reviewed and accepted by an independent California licensed structural engineer.*

...

SECTION 1704*A*
SPECIAL INSPECTIONS AND TESTS, CONTRACTOR RESPONSIBILITY AND STRUCTURAL OBSERVATION

1704*A*.1 General. Special inspections and tests, statements of special inspections, responsibilities of contractors, submittal to the building official and structural observation shall meet applicable requirements of this section.

1704*A*.2 Special inspections and tests. Where application is made to the building official for construction as specified in section 105, the owner ~~or the owners authorized agent, other than contractor,~~ shall employ one or more *approved agencies* to provide special inspections and tests during construction on the types of work specified in Section 1705*A* and identify the approved agencies to the building official. These special inspections and tests are in addition to the inspections by the building official that are identified in Section 110.

[OSHPD 1 & 4] *An inspection agency having accreditation to the International Standards Organization (ISO) accreditation Standard 17020 shall be deemed to comply with the requirements for an approved inspection agency.*

The inspectors shall act under the direction of the architect or structural engineer or both, and be responsible to the Owner. Where the California Administrative Code (CAC) Section 7-115 (a) 2 permits construction documents to be prepared under the responsible charge of a mechanical, electrical or civil engineer, inspectors shall be permitted to work under the direction of engineer in appropriate branch as permitted therein.

Exceptions:

1. *Special inspections* and tests are not required for construction of a minor nature or as warranted by conditions in the jurisdiction as *approved* by the *building official*.
2. ~~Unless otherwise required by the building official, special inspections are not required for Group U occupancies that are accessory to a residential occupancy including, but not limited to, those listed in Section 312.1.~~
3. ~~Special inspections are not required for portions of structures designed and constructed in accordance with the cold-formed steel light-frame construction provisions of Section 2211.7 or the conventional light-frame construction provisions of Section 2308.~~

~~4. The contractor is permitted to employ the approved agencies where the contractor is also the owner.~~

...

1704A.2.3 Statement of special inspections. The applicant shall submit a statement of *special inspections prepared by the registered design professional in responsible charge* in accordance with Section 107.1 as a condition for ~~permit issuance~~ *construction documents review*. This statement shall be in accordance with Section 1704A.3.

~~**Exception:** A statement of *special inspections* is not required for portions of structures designed and constructed in accordance with the cold-formed steel light frame construction provisions of Section 2211.7 or the conventional light-frame construction provisions of Section 2308.~~

...

1704A.2.4 Report requirement. The *inspector(s) of record and* ~~A~~ approved agencies shall keep records of special inspections and tests. The *inspector of record and* approved agency shall submit reports of special inspections and tests to the building official, and to the registered design professional in responsible charge *as required by the California Administrative Code*. Reports shall indicate that work inspected or tested was or was not completed in conformance to approved construction documents *as required by the California Administrative Code and this code.* ~~*Title 24 Parts 1 and 2.*~~ Discrepancies shall be brought to the immediate attention of the contractor for correction. If they are not corrected, the discrepancies shall be brought to the attention of the building official and to the registered design professional in responsible charge prior to the completion of that phase of the work. A final report documenting required special inspections and tests, and correction of any discrepancies noted in the inspections or tests, shall be submitted at a point in time agreed upon prior to the start of work by the owner or owner's authorized agent to the building official.

1704A.2.5 Special inspection of fabricated items. Where fabrication of structural, load-bearing or lateral load resisting members or assemblies is being conducted on the premises of a fabricator's shop, *special inspection* of the fabricated items shall be performed during fabrication.

Exceptions: ***[OSHPD 1 & 4]***

~~1)~~ Special inspections during fabrication are not required where the fabricator maintains approved detailed fabrication and quality control procedures that provide a basis for control of the workmanship and the fabricator's ability to conform to *approved construction documents* and this code. Approval shall be based upon review of fabrication and quality control procedures and periodic inspection of fabrication practices by the *special inspector and/or* building official*, as determined by the building official.*

~~2) *Special inspections* are not required where fabricator is registered and approved in accordance with Section 1704.2.5.1.~~

~~**1704.2.5.1 Fabricator approval.** *Special inspections* during fabrication are not required where the work is done on the premises of a fabricator registered and *approved* to perform such work without *special inspection*. Approval shall be based upon review of the fabricator's written procedural and quality control manuals and periodic auditing of fabrication practices by an *approved* agency. At completion of fabrication, the *approved* fabricator shall submit a *certificate of compliance* to the owner or owner's authorized agent for submittal to the *building official as specified in Section 1704.5* stating that the work was performed in accordance with the *approved construction documents.*~~

...

1704A.3.2 Seismic requirements in the statement of special inspections. Where Section 1705A.12 or 1705A.13 specifies *special inspections* or tests for seismic resistance, the statement of special inspections shall identify the *equipment/components that require special seismic certification* ~~designated seismic systems~~ and seismic force resisting systems that are subject to *special inspections* or tests.

...

1704A.4 Contractor responsibility. Each contractor responsible for the construction of a main wind- or seismic force resisting system, *installation of equipment/components requiring special seismic certification* ~~designated seismic system~~ or a wind- or seismic-resisting component listed in the statement of special inspections shall submit a written statement of responsibility to the *building official* and the owner or the Owner's authorized agent prior to the commencement of work on the system or component. The contractor's statement of responsibility shall contain acknowledgement of awareness of the special requirements contained in the statement of *special inspections*.

1704A.5 Submittal to the Building official. In addition to the submittal of reports of *special inspections* and tests in accordance with Section 1704A.2.4, reports and certificates shall be submitted by the owner or owner's authorized agent to the building official for each of the following:

1. *[OSHPD 1 & 4]* *Certificate of Compliance* for the fabrication of structural, load-bearing or lateral load-resisting members or assemblies on the premises of a*n* ~~registered and~~ *approved fabricator* in accordance with Section *1704A.2.5.* ~~1704.2.5.1.~~
2. *Certificate of compliance* for the ~~seismic qualification~~ *manufacturer's certification* of non-structural components, supports and attachments in Section 1705A.13.2.
3. *Certificate of compliance* for the ~~designated seismic system~~ *equipment/components requiring special seismic certification* in accordance with Section 1705A.13.3.

...

1704A.6 Structural observations. ~~Where required by the provisions of Section 1704.6.1 or 1704.6.2, t~~ The owner ~~or the owner's authorized agent~~ shall employ a *registered design professional* to perform structural observations. Structural observation does not include or waive the responsibility for inspection in Section 110 or the special inspections in Section 1705A or other sections of this code.

Prior to the commencement of observations, the structural observer shall submit to the *building official* a written statement identifying the frequency and extent of structural observations.

At the conclusion of the work included in the permit, the structural observer shall submit to the *building official* a written statement that the site visits have been made and identify any reported deficiencies that, to the best of the structural observer's knowledge, have not been resolved.

~~**1704.6.1 Structural observations for seismic resistance.** Structural observations shall be provided for those structures assigned to *Seismic Design Category* D, E or F where one or more of the following conditions exist:~~

~~1. The structure is classified as *Risk Category* III or IV.~~
~~2. The height of the structure is greater than 75 feet (22 860 mm) above the base as defined in ASCE 7.~~
~~3. The structure is assigned to *Seismic Design Category* E, is classified as *Risk Category* I or II, and is greater than two *stories above grade plane.*~~
~~4. When so designated by the *registered design professional* responsible for the structural design.~~
~~5. When such observation is specifically required by the *building official.*~~

~~**1704.6.2 Structural observations for wind requirements.** Structural observations shall be provided for those structures sited where *Vasd* as determined in accordance with Section 1609.3.1 exceeds 110 mph (49 m/sec), where one or more of the following conditions exist:~~

~~1. The structure is classified as *Risk Category* III or IV.~~
~~2. The *building height* is greater than 75 feet (22 860 mm).~~
~~3. When so designated by the *registered design professional* responsible for the structural design.~~
~~4. When such observation is specifically required by the *building official.*~~

SECTION 1705A
REQUIRED SPECIAL INSPECTIONS AND TESTS

1705A.1 General. Special inspections and tests of elements and nonstructural components of buildings and structures shall meet the applicable requirements of this section.

...

1705A.2.1 Structural steel. Special inspections and nondestructive testing of structural steel elements in buildings, structures and portions thereof shall be in accordance with the quality assurance ~~inspection~~ requirements ~~of AISC 360~~ *of this section, ~~and~~ Chapter 22A* *and quality control requirements of AISC 360, AISC 341 and AISC 358.*

Exception: *Special inspection* of railing systems composed of structural steel elements shall be limited to welding inspection of welds at the base of cantilevered rail post.

AISC 360, Chapter N and AISC 341, Chapter J are adopted, except as noted below:
The following provisions of AISC 360, Chapter N are not adopted:

1. *N4., Item 2. (Quality Assurance Inspector Qualifications)*
2. *N5., Item 2. (Quality Assurance)*

~~*N5., Item 3. (Coordinated Inspection)*~~
~~*N5., Item 4. (Inspection of Welding)*~~
~~*N7 (Approved Fabricators and Erectors)*~~
~~*N8 (Nonconforming Material and Workmanship)*~~

In addition to the quality assurance inspection requirements contained in AISC 360, Section N5 ~~Item 6 (Inspection of High Strength Bolting)~~ (Minimum Requirements for Inspection of Structural Steel Buildings), the requirements of Table 1705A.2.1 of the California Building Code shall apply.

In addition to the quality assurance requirements contained in AISC 360, Section N6 (Minimum Requirements for Inspection of Composite Construction), the requirements of Table 1705A.2.1 of the California Building Code shall apply.

In addition to the quality assurance requirements contained in AISC 341, Chapter J, Section J5 (Inspection Tasks), the requirements of Section 1704A.3 and Table 1705A.2.1 of the California Building Code shall apply.

TABLE 1705A.2.1 - REQUIRED VERIFICATION AND INSPECTION OF STEEL CONSTRUCTION

VERIFICATION AND INSPECTION	CONTINUOUS	PERIODIC	REFERENCED STANDARD[a]	CBC REFERENCE
1. Material verification of high-strength bolts, nuts and washers:				
a. Identification markings to conform to ASTM standards specified in the approved construction documents.	-	X	AISC 360, Section A3.3 and applicable ASTM material standards	-
b. Manufacturer's certificate of compliance required.	-	X	-	-

2. Inspection of high-strength bolting:				
a. Snug-tight joints.	-	X	*AISC 360, Section M2.5*	-
b. Pretensioned and slip-critical joints using turn-of-nut with matchmarking, twist-off bolt or direct tension indicator methods of installation.	-	X		
c. Pretensioned and slip-critical joints using turn-of-nut without matchmarking or calibrated wrench methods of installation.	X	-		
3. Material verification of structural steel and cold-formed steel deck:				
a. For structural steel, identification markings to conform to AISC 360.	-	X	*AISC 360, Section A3.1*	*2203A.1*
b. For other steel, identification markings to conform to ASTM standards specified in the approved construction documents.	-	X	*Applicable ASTM material standards*	
c. Manufacturer's certified test reports.	-	X		
4. Material verification of weld filler materials:				
a. Identification markings to conform to AWS specification in the approved construction documents.	-	X	*AISC 360, Section A3.5 and applicable AWS A5 documents*	-
b. Manufacturer's certificate of compliance required.	-	X	-	-
5. Inspection of welding:				
a. Structural steel and cold-formed steel deck:				
1) Complete and partial joint penetration groove welds.	X	-	*AWS D1.1, AWS D1.8*	*1705A.2.1*
2) Multipass fillet welds.	X	-		
3) Single-pass fillet welds > $^5/_{16}$"	X	-		
4) Plug and slot welds.	X	-		
5) Single-pass fillet welds ≤ $^5/_{16}$"	-	X		
6) Floor and roof deck welds.	-	X	*AWS D1.3*	

TABLE 1705A.2.1- continued
REQUIRED VERIFICATION AND INSPECTION OF STEEL CONSTRUCTION

VERIFICATION AND INSPECTION	CONTINUOUS	PERIODIC	REFERENCED STANDARD[a]	CBC REFERENCE
b. Reinforcing steel:				
1) Verification of weldability of reinforcing steel other than ASTM A 706.	-	X	AWS D1.4, ACI 318: Sections 26.6.4.1, 18.2.8, 25.5.7.4 ~~3.5.2~~	-
2) Reinforcing steel resisting flexural and axial forces in intermediate and special moment frames, and boundary elements of special structural walls of concrete and shear reinforcement.	X	-		
3) Shear reinforcement.	X	-		
4) Other reinforcing steel.	-	X		
6. Inspection of steel frame joint details for compliance:				
a. Details such as bracing and stiffening.	-	X	-	1705A.2.1 ~~1705A.2.2~~
b. Member locations.	-	X		
c. Application of joint details at each connection.	-	X		

For SI: 1 inch = 25.4 mm.
a. Where applicable, see also Section ~~1705A.11~~ 1705A.12, Special inspection for seismic resistance

...

1705A.2.2 Cold-formed steel deck. Special inspections ~~and qualification of welding special inspectors~~ for cold formed steel floor and roof deck shall be in accordance with the quality assurance inspection requirements of SDI QA/QC.

Deck weld special inspection shall also satisfy requirements in Table 1705A.2.1 and Section 1705A.2.5.

...

1705A.2.3.1 ~~1705A.2.2.3~~ Steel joist and joist girder inspection. *Special inspection is required during the manufacture and welding of steel joists or joist girders. The approved agency ~~special inspector~~ shall verify that proper quality control procedures and tests have been employed for all materials and the manufacturing process, and shall perform visual inspection of the finished product. The approved agency ~~special inspector~~ shall place a distinguishing mark, and/or tag with this distinguishing mark, on each inspected joist or joist girder. This mark or tag shall remain on the joist or joist girder throughout the job site receiving and erection process.*

...

1705A.2.4.1 ~~1705A.2.2.4~~ Light-framed steel truss inspection. *The manufacture of cold-formed light framed steel trusses shall be continuously inspected by an approved agency ~~a qualified special inspector approved by the enforcement agency~~. The approved agency ~~special inspector~~ shall verify conformance of materials and manufacture with approved plans and specifications. The approved agency ~~special inspector~~ shall place a distinguishing mark, and/or tag with this distinguishing mark, on each inspected truss. This mark or tag shall remain on the truss throughout the job site receiving and erection process.*
1705A.2.5 ~~1705A.2.2.5~~ Inspection of structural welding. *Inspection of all shop and field welding operations shall be made by a qualified welding inspector approved by the enforcement agency.*

The minimum requirements for a qualified welding inspector shall be as those for an AWS Certified Welding Inspector (CWI), as defined in the provisions of the AWS QC1. ~~All welding inspectors shall be as approved by the enforcement agency.~~

Exception: [OSHPD 1 & 4] *Inspection and nondestructive testing personnel meeting the requirements of AISC 341 Section J4 (in addition to AISC 360 Section N4) shall be permitted to perform quality control and quality assurance inspections at the premises of an approved fabricator's shop.*

The welding inspector shall make a systematic daily record of all welds. In addition to other records, this record shall include:

1. *Identification marks of welders.*
2. *List of defective welds.*
3. *Manner of correction of defects.*

The welding inspector shall check the material, details of construction and procedure, as well as workmanship of the welds. The inspector shall verify that the installation of end-welded stud shear connectors is in accordance with the requirements of AWS D1.1 and the approved plans and specifications. The ~~inspector~~ approved agency shall furnish the architect, structural engineer, and the enforcement agency with a verified report that the welding ~~is proper and~~ has been done in ~~conformity~~ conformance with AWS D1.1, D1.3, D1.8, and the approved construction documents.

1705A.3 Concrete construction. *Special inspections* and tests of concrete construction shall be performed in accordance with this section and Table 1705A.3.

Exception: *Special inspections and tests* shall not be required for~~:~~

~~1. Isolated spread concrete footings of buildings three stories or less above *grade plane* that are fully supported on earth or rock.~~
~~2. Continuous concrete footings supporting walls of buildings three stories or less above *grade plane* that are fully supported on earth or rock where:~~
~~2.1. The footings support walls of light-frame construction;~~
~~2.2. The footings are designed in accordance with Table 1809.7; or~~
~~2.3. The structural design of the footing is based on a specified compressive strength, f'_c, no greater than 2,500 pounds per square inch (psi) (17.2 MPa), regardless of the compressive strength specified in the approved *construction documents* or used in the footing construction.~~
~~3. Nonstructural concrete slabs supported directly on the ground, including prestressed slabs on grade, where the effective prestress in the concrete is less than 150 psi (1.03 MPa).~~
~~4. Concrete foundation walls constructed in accordance with Table 1807.1.6.2.~~
~~5. C~~ concrete patios, driveways and sidewalks, on grade.

...

1705A.3.3 ***~~1705A.3.2~~*** ***Batch plant inspection.*** *Except as provided under this ~~S~~ section ~~1705A.3.3~~, the quality and quantity of materials used in transit-mixed concrete and in batched aggregates shall be continuously inspected by an approved agency ~~special inspector~~ at the location where materials are measured.*

1705A.3.3.1 ***~~1705A.3.3~~*** ***Waiver of continuous batch plant inspection.*** *Continuous batch plant inspection may be waived by the registered design professional, subject to approval by the enforcement agency under either of the following conditions:*

1. *The concrete plant complies fully with the requirements of ASTM C 94, Sections 9 ~~8~~ and 10 ~~9~~, and has a current certificate from the National Ready Mixed Concrete Association or another agency acceptable to the enforcement agency. The certification shall indicate that the plant has automatic batching and recording capabilities.*

2. *For single -story light-framed construction (without basement or retaining wall higher than 6' in height measured from bottom of footing to top of wall) ~~-buildings~~ and isolated foundations supporting equipment only, where deep foundation elements are not used. ~~, where the specified compressive strength fc of the concrete delivered to the jobsite is 3,500 psi (24.13 MPa) and where the f'_c used in design is not greater than 3,000 psi (20.68 MPa).~~*

When continuous batch plant inspection is waived, the following ~~periodic inspection~~ requirements shall apply and shall be described in the construction documents:

1. *~~Qualified technician of the~~ An approved agency ~~testing laboratory~~ shall check the first batch at the start of the day to verify materials and proportions conform to the approved mix design.*

2. *A ~~L~~ licensed weighmaster shall ~~to~~ positively identify quantity of materials ~~as to quantity~~ and certify ~~to~~ each load by a batch ticket.*

3. *Batch tickets, including material quantities and weights shall accompany the load, shall be transmitted to the inspector of record by ~~a the~~ truck driver with load identified thereon. The load shall not be placed without a batch ticket identifying the mix. The inspector of record shall ~~will~~ keep a daily record of placements, identifying each truck, its load, and time of receipt at the job site, and approximate location of deposit in the structure and shall maintain ~~will transmit~~ a copy of the daily record as required by ~~to~~ the enforcement agency.*

1705A.3.4 Inspection of prestressed concrete.

1. *In addition to the general inspection required for concrete work, all plant fabrication of prestressed concrete members or tensioning of posttensioned members constructed at the site shall be continuously inspected by an inspector specially approved for this purpose by the enforcement agency.*

2. *The prestressed concrete plant fabrication inspector shall check the materials, equipment, tensioning procedure and construction of the prestressed members and prepare daily written reports. The ~~inspector~~ approved agency shall make a verified report identifying the members by mark and shall include such pertinent data as lot numbers of tendons used, tendon jacking forces, age and strength of concrete at time of tendon release and such other information that may be required.*

3. *The inspector of prestressed members posttensioned at the site shall check the condition of the prestressing tendons, anchorage assemblies and concrete in the area of the anchorage, the tensioning equipment and the tensioning procedure and prepare daily written reports. The ~~inspector~~ approved agency shall make a verified report of the prestressing operation identifying the members or tendons by mark and including such pertinent data as the initial cable slack, net elongation of tendons, jacking force developed, and such other information as may be required.*

4. *The verified reports of construction shall show that of the inspector's own personal knowledge, the work covered by the report has been performed and materials used and installed in every material respect in compliance with the duly approved plans and specifications for plant fabrication inspection. The verified report shall be accompanied by test reports required for materials used. For site posttensioning inspections the verified report shall be accompanied by copies of calibration charts, certified by an approved testing laboratory, showing the relationship between gage readings and force applied by the jacks used in the prestressing procedure*

1705A.3.5 Concrete pre-placement inspection. *Concrete shall not be placed until the forms and reinforcement have been inspected, all preparations for the placement have been completed, and the preparations have been checked by the inspector of Record.*

1705A.3.6 Placing record. *A record shall be kept on the site of the time and date of placing the concrete in each portion of the structure. Such record shall be kept until the completion of the structure and shall be open to the inspection of the enforcement agency.*

...

TABLE 1705A.3 - REQUIRED SPECIAL INSPECTION AND TESTS OF CONCRETE CONSTRUCTION

TYPE	CONTINUOUS SPECIAL INSPECTION	PERIODIC SPECIAL INSPECTION	REFERENCE STANDARDS	CBC REFERENCE
...		...	...	...
4. Inspect anchors post installed in hardened concrete members. [b,c] a. Adhesive anchors installed in horizontally or upwardly inclined orientations to resist sustained tension loads. ...	X		**ACI318: 17.8.2.4**	—
~~*13. Inspection of adhesive anchors in horizontal and upwardly inclined positions.*~~ [c]		~~X~~	~~**ACI318: D.9.2.2**~~	—

...

c. Installation of all adhesive anchors in horizontal and upwardly inclined positions shall be performed by an ACI/CRSI Certified Adhesive Anchor Installer, except where the factored design tension on the anchors is less than 100 lbs. and those anchors are clearly noted on the approved construction documents or where the anchors are shear dowels across cold joints in slabs on grade where the slab is not part of the lateral force resisting system.

...

1705A.4 Masonry construction. Special inspections and tests of masonry construction shall be performed in accordance with the quality assurance program requirements of TMS 402/ACI 530/ASCE 5, *as set forth in Table 3.1.3 Level C requirements,* and TMS 602/ACI 530.1/ASCE 6. ~~*, as set forth in Table 1.19.3 Level C* requirements.~~ *Special* ~~*I*~~ *inspection and testing of post-installed anchors in masonry shall be required in accordance with requirements for concrete in Chapters 17A and 19A.*

~~**Exception:** *Special inspections and tests* shall not be required for:~~

~~1. Empirically designed masonry, glass unit masonry or masonry veneer in accordance with Section 2109, 2110 or Chapter 14, respectively, where they are part of structures classified as *Risk Category* I, II or III.~~
~~2. Masonry foundation walls constructed in accordance with Table 1807.1.6.3(1), 1807.1.6.3(2), 1807.1.6.3(3) or 1807.1.6.3(4).~~
~~3. Masonry fireplaces, masonry heaters or masonry chimneys installed or constructed in accordance with Section 2111, 2112 or 2113, respectively.~~

1705*A*.4.1 ~~Empirically designed masonry, g~~ Glass unit masonry and masonry veneer in Risk ~~Category~~ *Categories II, III or* IV. *Special inspections and tests* for ~~empirically designed masonry,~~ glass unit masonry or masonry veneer designed by Section ~~2109,~~ 2110*A* or Chapter 14, respectively, in structures classified as *Risk ~~Category~~ Categories II, III or* IV, shall be performed in accordance with TMS 402/ACI 530/ASCE 5 Level B Quality Assurance.

...

1705*A*.5 Wood construction. *Special inspections* of prefabricated wood structural elements and assemblies shall be in accordance with Section 1704*A*.2.5 *except as modified in this section. Special inspections* of site-built assemblies shall be in accordance with this section.

...

1705A.5.3 Wood structural elements and assemblies. *Special inspection of wood structural elements and assemblies is required, as specified in this section, to ensure conformance with approved ~~drawings and specifications~~ construction documents, and applicable standards. The approved agency ~~special inspector~~ shall furnish a verified report to the design professional in general responsible charge of construction observation, the structural engineer, and the enforcement agency, in accordance with the California Administrative code and this chapter. The verified report shall list all inspected members or trusses, and shall indicate whether or not the inspected members or trusses conform with applicable standards and the approved drawings and specifications. Any non-conforming items shall be indicated on the verified report.*

1705A.5.4 Structural glued laminated timber. *Manufacture of all structural glued laminated timber shall be continuously inspected by an approved agency ~~a qualified special inspector approved by the enforcement agency~~.*

The approved agency ~~special inspector~~ shall verify that proper quality control procedures and tests have been employed for all materials and the manufacturing process, and shall perform visual inspection of the finished product. Each inspected member shall be stamped by the approved agency ~~special inspector~~ with an identification mark.

> ***Exception:*** *Special Inspection is not required for non-custom members of 5-1/8 inch maximum width and 18 inch maximum depth, and with a maximum clear span of 32 feet, manufactured and marked in accordance with ANSI/APA A190.1 Section 6.1.1 for non-custom members.*

1705A.5.5 Manufactured open web trusses. *The manufacture of open web trusses shall be continuously inspected by an approved agency ~~a qualified special inspector approved by the enforcement agency~~.*

The approved agency ~~special inspector~~ shall verify that proper quality control procedures and tests have been employed for all materials and the manufacturing process, and shall perform visual inspection of the finished product. Each inspected truss shall be stamped with an identification mark by the ~~special inspector~~ approved agency.

1705A.5.6 Timber connectors. *The installation of all split ring and shear plate timber connectors, and timber rivets shall be continuously inspected by an approved agency ~~a qualified inspector approved by the enforcement agency~~. The approved agency ~~inspector~~ shall furnish the architect, structural engineer and the enforcement agency with a report verifying ~~duly verified by him~~ that the*

materials, timber connectors and workmanship conform to the approved ~~plans and specifications~~ construction documents.

...

1705A.6.1 Soil fill. *All fills used to support the foundations of any building or structure shall be continuously inspected by the geotechnical engineer or his or her qualified representative. It shall be the responsibility of the geotechnical engineer to verify that fills meet the requirements of the approved construction documents and to coordinate all fill inspection and testing during the construction involving such fills.*

The duties of the geotechnical engineer or his or her qualified representative shall include, but need not be limited to, the inspection of cleared areas and benches prepared to receive fill; inspection of the removal of all unsuitable soils and other materials; the approval of soils to be used as fill material; the inspection of placement and compaction of fill materials; the testing of the completed fills; the inspection or review of geotechnical drainage devices, buttress fills or other similar protective measures in accordance with the approved construction documents.

A verified report shall be submitted by the geotechnical engineer as required by the California Administrative Code. The report shall indicate that all tests and inspection required by the approved construction documents were completed and that the tested materials and/or inspected work meet the requirements of the approved construction documents.

...

1705A.7.1 ***Driven deep foundations observation.*** *The installation of driven deep foundations shall be continuously inspected by a qualified representative of the geotechnical engineer responsible for that portion of the project.*

The representative of the geotechnical engineer shall make a report of the deep foundation pile-driving operation giving such pertinent data as the physical characteristics of the deep foundation pile-driving equipment, identifying marks for each deep foundation pile, the total depth of embedment for each deep foundation; and when the allowable deep foundation pile loads are determined by a dynamic load formula, the design formula used, and the permanent penetration under the last 10 blows. One copy of the report shall be sent to the enforcement agency.

...

1705A.11.1 Structural wood. Continuous special inspection is required during field gluing operations of elements of the main windforce-resisting system. Periodic special inspection is required for nailing, bolting, anchoring and other fastening of elements of the main windforce resisting system, including wood shear walls, wood diaphragms, drag struts, braces and hold-downs.

> ~~**Exception:** *Special inspections are* not required for wood shear walls, shear panels and diaphragms, including nailing, bolting, anchoring and other fastening to other components of the main windforce-resisting system, where the fastener spacing of the sheathing is more than 4 inches (102 mm) on center.~~

1705A.11.2 Cold-formed steel light-frame construction. Periodic special inspection is required for welding operations of elements of the main windforce-resisting system. Periodic special inspection is required for screw attachment, bolting, anchoring and other fastening of elements of the main windforce-resisting system, including shear walls, braces, diaphragms, collectors (drag struts) and hold-downs.

> ~~**Exception:** *Special inspections are* not required for cold-formed steel light-frame shear walls and diaphragms, including screwing, bolting, anchoring and other fastening to components of the windforce-resisting system, where either of the following apply:~~
>
> ~~1. The sheathing is gypsum board or fiberboard.~~

~~2. The sheathing is wood structural panel or steel sheets on only one side of the shear wall, shear panel or diaphragm assembly and the fastener spacing of the sheathing is more than 4 inches (102 mm) on center (o.c.).~~

...

1705*A*.12 Special inspections for seismic resistance. *Special inspections* for seismic resistance shall be required as specified in Sections 1705*A*.12.1 through 1705*A*.12.9, unless exempted by the exceptions of Section 1704*A*.2.

~~**Exception:** The special inspections specified in Sections 1705.12.1 through 1705.12.9 are not required for structures designed and constructed in accordance with one of the following:~~

~~1. The structure consists of light frame construction; the design spectral response acceleration at short periods, S_{DS}, as determined in Section 1613.3.4, does not exceed 0.5; and the building height of the structure does not exceed 35 feet (10 668 mm).~~
~~2. The seismic force-resisting system of the structure consists of reinforced masonry or reinforced concrete; the design spectral response acceleration at short periods, S_{DS}, as determined in Section 1613.3.4, does not exceed 0.5; and the building height of the structure does not exceed 25 feet (7620 mm).~~
~~3. The structure is a detached one- or two-family dwelling not exceeding two *stories above grade plane* and does not have any of the following horizontal or vertical irregularities in accordance with Section 12.3 of ASCE 7:~~
~~3.1. Torsional or extreme torsional irregularity.~~
~~3.2. Nonparallel systems irregularity.~~
~~3.3. Stiffness soft story or stiffness extreme soft story irregularity.~~
~~3.4. Discontinuity in lateral strength weak story irregularity.~~

1705A.12.1 Structural steel. *Special inspections* for structural steel shall be in accordance with Section 1705A.12.1.1 or 1705A.12.1.2, as applicable.

1705A.12.1.1 Seismic Force-Resisting Systems. *Special inspections* of structural steel in the seismic force resisting systems of buildings and structures assigned to *Seismic Design Category* ~~B, C,~~ D, E or F shall be performed in accordance with quality assurance requirements of AISC 341 *as modified by Section 1705A.2.1 of this code*.

~~**Exception:** *Special inspections* the seismic force-resisting systems of buildings and structures assigned to *Seismic Design Category* B or C that are not specifically detailed for seismic resistance, with a response modification coefficient, *R*, of 3 or less, excluding cantilever column systems.~~

1705A.12.1.2 Structural Steel Elements. *Special inspections* of *structural steel elements* in the seismic force resisting systems of buildings and structures assigned to *Seismic Design Category* ~~B, C,~~ D, E or F, other than those covered in Section 1705*A*.12.1.1, including struts, collectors, chords, and foundation elements, shall be performed in accordance with quality assurance requirements of AISC 341 *as modified by Section 1705A.2.1 of this code*.

~~**Exception:** *Special inspections* of *structural steel element* are not required in the seismic force-resisting systems of buildings and structures assigned to *Seismic Design Category* B or C with a response modification coefficient, *R*, of 3 or less.~~

1705*A*.12.2 Structural wood. For the seismic force-resisting system of structures assigned to *Seismic Design Category* ~~C,~~ D, E or F:

...

~~**Exception:** *Special inspections* are not required for wood shear walls, shear panels and diaphragms, including nailing, bolting, anchoring and other fastening to other elements of the~~

~~seismic force-resisting system, where the fastener spacing of the sheathing is more than 4 inches (102 mm) on center.~~

1705A.12.3 Cold-formed steel light-frame construction. For the seismic force-resisting system of structures assigned to *Seismic Design Category* ~~C,~~ D, E or F, periodic special inspection shall be required:

...

~~**Exception:** *Special inspections* are not required for cold formed steel light frame shear walls and diaphragms, including screw installation, bolting, anchoring and other fastening to components of the seismic force-resisting system, where either of the following applies:~~

~~1. The sheathing is gypsum board or fiberboard.~~
~~2. The sheathing is wood structural panel or steel sheets on only one side of the shear wall, shear panel or diaphragm assembly and the fastener spacing of the sheathing is more than 4 inches (102 mm) on center.~~

...

1705A.12.4 *Special Inspection for Special Seismic Certification.* ~~**Designated seismic systems.**~~ For structures assigned to *Seismic Design Category* ~~C,~~ D, E or F, the special inspector shall examine *equipment and components* ~~designated seismic systems~~ requiring *special* seismic *certification* ~~qualification~~ in accordance with *Section* *1705A.13.3 or* ASCE 7 Section 13.2.2 and verify that the *label*, anchorage and mounting conforms to the *certificate of compliance*.

1705A.12.5 Architectural components. *Periodic special inspection* is required for the erection and fastening of exterior cladding, interior and exterior nonbearing walls, *ceilings*, and interior and exterior veneer in structures assigned to *Seismic Design Category* D, E or F.

~~**Exceptions:** *Periodic special inspection* is not required for the following:~~
~~1. Exterior cladding, interior and exterior nonbearing walls and interior and exterior veneer 30 feet (9144 mm) or less in height above grade or walking surface.~~
~~2. Exterior cladding and interior and exterior veneer weighing 5 psf (24.5 N/m^2) or less.~~
~~3. Interior nonbearing walls weighing 15 psf (73.5 N/m^2) or less.~~

...

1705A.12.6 Plumbing, mechanical and electrical components. *Periodic special inspection* of plumbing, mechanical and electrical components shall be required for the following:

1. Anchorage of electrical equipment for emergency or standby power systems in structures assigned to *Seismic Design Category* ~~C,~~ D, E or F.
2. Anchorage of other electrical equipment in structures assigned to *Seismic Design Category D,* E or F.
3. Installation and anchorage of piping systems designed to carry hazardous materials and their associated mechanical units in structures assigned to *Seismic Design Category* ~~C,~~ D, E or F.
4. Installation and anchorage of ductwork designed to carry hazardous materials in structures assigned to *Seismic Design Category* ~~C,~~ D, E or F.
5. Installation and anchorage of vibration isolation systems in structures assigned to *Seismic Design Category* ~~C,~~ D, E or F where the approved *construction documents* require a nominal clearance of 1/4 inch (6.4 mm) or less between the equipment support frame and restraint.

...

1705A.12.8 Seismic isolation *and damping* systems. Periodic special inspection shall be provided for seismic isolation *and damping* systems in ~~seismically isolated~~ structures assigned to Seismic Design Category ~~B, C~~, D, E or F during the fabrication and installation of isolator units and energy dissipation devices. *Continuous special inspection is required for prototype and production testing of isolator units and damping devices.*

~~**1705A.12.9 Cold-formed steel special bolted moment frames.** Periodic special inspection shall be provided for the installation of cold-formed steel special bolted moment frames in the seismic force-resisting systems of structures assigned to Seismic Design Category D, E or F.~~

1705*A*.13 Testing for seismic resistance. Testing for seismic resistance shall be required as specified in Sections 1705*A*.13.1.1 through 1705*A*.13.4, unless exempted from special inspections by exceptions of Section 1704*A*.2.

1705A.13.1 Structural Steel. Nondestructive testing for seismic resistance shall be in accordance with Section 1705*A*.13.1.1 or 1705*A*.13.1.2, as applicable.

1705A.13.1.1 Seismic Force-Resisting Systems. Nondestructive testing of structural steel in the seismic force resisting systems of buildings and structures assigned to Seismic Design Category ~~B, C,~~ D, E or F shall be performed in accordance with the quality assurance requirements of AISC 341.

~~**Exception:** Nondestructive testing is not required in the seismic force-resisting systems of buildings and structures assigned to *Seismic Design Category* B or C that are not specifically detailed for seismic resistance, with a response modification coefficient, *R*, of 3 or less, excluding cantilever column systems.~~

1705*A*.13.1.2 Structural Steel Elements. Nondestructive testing of *structural steel elements* in the seismic force resisting systems of buildings and structures assigned to *Seismic design Category* ~~B, C,~~ D, E or F, other than those covered in Section 1705*A*.13.1.1, including struts, collectors, chords, and foundation elements, shall be performed in accordance with quality assurance requirements of AISC 341.

~~**Exception:** Nondestructive testing of *structural steel element* is not required in the seismic force-resisting systems of buildings and structures assigned to *Seismic Design Category* B or C with a response modification coefficient, *R*, of 3 or less.~~

1705A.13.2 Nonstructural Components. For structures assigned to *Seismic design Category* ~~B, C,~~ D, E or F, where requirements of Section 13.2.1 of ASCE 7 for non-structural components, supports, or attachments are met by *manufacturer's certification* ~~seismic qualification~~ as specified in Item 2 therein, the *registered design professional* shall specify on the *approved construction documents* the requirements for seismic *certification* ~~qualification~~ by analysis~~,~~ *or* testing. ~~or experience data.~~ *Certificates of compliance* for the ~~seismic qualification~~ *manufacturer's certification* shall be submitted to the building official as specified in Section 1704*A*.5.

Seismic sway braces satisfying requirements of FM 1950 shall be deemed to satisfy the requirements of this Section. Component tests shall be supplemented by assembly tests, when required by the building official.

1705*A*.13.3 *Special Seismic Certification.* ~~*[OSHPD 1 & 4]* **Designated Seismic System.**~~ For structures assigned to *Seismic design Category* ~~C,~~ D, E or F, ~~and with *designated seismic systems*~~ *equipment and components* that are subject to the requirements of Section 13.2.2 of ASCE 7 for *special seismic* certification, the *registered design professional* shall specify on the *approved construction documents* the requirements to be met by analysis~~,~~ *or* testing ~~or experience data~~ as specified therein. *Certificates of compliance* documenting that the requirements are met shall be submitted to the building official as specified in Section 1704*A*.5.

Active or energized equipment and components shall be certified exclusively on the basis of approved shake table testing in accordance with ICC-ES AC 156. Minimum of two equipment/components shall be tested for a product line with similar structural configuration. Where a range of products are tested, the two equipment/components shall be either the largest and a small unit ~~smallest~~, or approved alternative representative equipment/components.

Exception: *When a single product (and not a product line with more than one product with variations) is certified and manufacturing process is ISO 9001 certified, one test shall be permitted.*

~~(Relocated to Section 1705A.4)~~ ~~*All tests shall be performed by an independent laboratory having accreditation to the International Standards Organization (ISO) accreditation standard 17025 or shall be under the responsible charge of an independent California licensed engineer. Test reports shall be reviewed and accepted by an independent California licensed structural engineer.*~~

For a multi-component system, where active or energized components are certified by tests, connecting elements, attachments, and supports can be justified by supporting analysis.

1705A.13.3.1 [OSHPD 1 & 4] ~~***1705A.12.4.1***~~ *Special seismic certification shall be required for the following systems, equipment, and components:*

1. *Emergency and standby power systems.*
2. *Elevator equipment (excluding elevator cabs).*
3. *Components with hazardous contents.*
4. *Exhaust and Smoke control fans.*
5. *Switchgear and Switchboards.*
6. *Motor control centers.*
7. ~~*Radiography and fluoroscopy systems in fluoroscopy rooms.*~~ *Fluoroscopy and x-ray equipment required for radiological/diagnostic imaging service (for service requirements see CBC Section 1224.18.1) and any fluoroscopy and/or radiographic system provided in support of diagnostic assessment of trauma injuries.*
8. *CT (Computerized Tomography) systems used for diagnostic assessment of trauma injuries.*
   Exception: *CT equipment used for treatment or in hybrid operating rooms, including those used for interventional CT, unless used for diagnostic assessment of trauma injuries.*
9. *Air conditioning units excluding Variable/Constant Air Volume (VAV/CAV) boxes up to 75 lbs.*
10. *Air handling units.*
11. *Chillers, including associated evaporators, and condensers.*
12. *Cooling Towers.*
13. *Transformers.*
14. *Electrical substations.*
15. *UPS and batteries.*
16. ~~*Distribution panels*~~ *Panelboards as defined in the California Electrical Code (CEC) Article 100.*
17. *Industrial Control panels as defined in the California Electrical Code (CEC) Article 100.*
18. *Power isolation and correction systems.*
19. *Motorized surgical lighting systems.*
20. *Motorized operating table systems*
21. *Internal communication servers and routers.*
22. *Medical gas and vacuum systems.*
23. *Electrical busways as defined in UL 857.*
24. *Electrical control panels powered by the life safety branch in accordance with the California Electrical Code (CEC) Article 517.32 or the critical branch in accordance with the California Electrical Code (CEC) Article 517.33.*

Exceptions:

1. *Equipment and components weighing not more than* ~~*20*~~ *50 lbs. supported directly on structures* ~~*(and not*~~ *or surface mounted on* ~~*other*~~ *equipment or components*~~*)*~~ *that are not required to have special seismic certification by this section.* ~~*with supports and attachments in accordance with this code.*~~

2. *Movable (mobile) and temporary equipment/components, which are not anchored to structure or permanently attached to the building utility services such as electricity, gas, or water. For the purposes of this requirement, "permanently attached" shall include all electrical connections except plugs for duplex receptacles.*
3. *Pipes, ducts, conduits, and cable trays, excluding in-line equipment and components.*
4. *Underground tanks.*
5. *Electric motors, ~~and~~ pumps, and compressors up to 20 hp. ~~not more than 10 hp. rigidly supported directly on structures (and not mounted on other equipment or components) with supports and attachments in accordance with this code~~.*
6. *Electrical Controllers, Switches, Transformers, Circuit Breakers, and fuses up to 10 lbs. or 10 amperes.*
7. *Components where importance factor, I_p, is permitted to be 1.0 by this code.*
8. *Emergency generators up to 25 kilowatts.*
9. *Equipment and Components used for clinical trials only.*

1705A.13.4 Seismic isolation *and damping* systems. Seismic isolation *and damping* systems in ~~seismically isolated~~ structures assigned to Seismic Design Category ~~B, C,~~ D, E or F shall be tested in accordance with Section 17.8 *and 18.9* of ASCE 7.

Prototype and production testing and associated acceptance criteria for isolator units and damping devices shall be subject to preapproval by the building official. Testing exemption for similar units shall require approval by the building official.

...

1705A.19 ***~~1705A.18~~*** ***Shotcrete.*** *All shotcrete work shall be continuously inspected during placing by an approved agency ~~inspector specially approved for that purpose by the enforcement agency~~. The special shotcrete inspector shall check the materials, placing equipment, details of construction and construction procedure. The ~~inspector~~ an approved agency shall furnish a verified report that of his or her own personal knowledge the work covered by the report has been performed and materials used and installed in every material respect in compliance with the duly approved plans and specifications.*

1705A.19.1 ***~~1705A.18.1~~*** ***Visual examination for structural soundness of in-place shotcrete.*** *Completed shotcrete work shall be checked visually for reinforcing bar embedment, voids, rock pockets, sand streaks and similar deficiencies by examining a minimum of three 3-inch (76 mm) cores taken from three areas chosen by the design engineer which represent the worst congestion of reinforcing bars occurring in the project. Extra reinforcing bars may be added to noncongested areas and cores may be taken from these areas. The cores shall be examined by the special inspector and a report submitted to the enforcement agency prior to final approval of the shotcrete.*

Exception: *Shotcrete work fully supported on earth, minor repairs, and when, in the opinion of the enforcement agency, no special hazard exists.*

...

~~All existing amendments that are not revised above shall continue without any change.~~

NOTATION:
Authority: Health and Safety Code Section 129850
Reference: Health and Safety Code Sections 1275, 129850 and 129790

CHAPTER 18
SOILS AND FOUNDATIONS

SECTION 1801
GENERAL

1801.1 Scope. The provisions of this chapter shall apply to building and foundation systems.

...

SECTION 1803
GEOTECHNICAL INVESTIGATIONS

1803.1 General. Geotechnical investigations shall be conducted in accordance with Section 1803.2 and reported in accordance with Section 1803.6. Where required by the *building official* or where geotechnical investigations involve in-situ testing, laboratory testing or engineering calculations, such investigations shall be conducted by a *registered design professional.*

1803.2 Investigations required. Geotechnical investigations shall be conducted in accordance with Sections 1803.3 through 1803.5.

Exception: The *building official* shall be permitted to waive the requirement for a geotechnical investigation where satisfactory data from adjacent areas is available that demonstrates an investigation is not necessary for any of the conditions in Sections 1803.5.1 through 1803.5.6 and Sections 1803.5.10 and 1803.5.11.

[OSHPD 2] Geotechnical reports are not required for one-story, wood-frame and light-steel-frame buildings of Type V construction and 4,000 square feet (371 m^2) or less in floor area, not located within Earthquake Fault Zones or Seismic Hazard Zones as shown in the most recently published maps from the California Geological Survey (CGS). Allowable foundation and lateral soil pressure values may be determined from Table 1806.2.

...

1803.6 Reporting.

...

11. [OSHPD 2] The report shall consider the effects of seismic hazard in accordance with Section 1803.7.

...

1803.7 Geohazard reports. [OSHPD 2]

Geohazard reports shall be required for all proposed construction.

Exceptions:

1. Reports are not required for one-story, wood-frame and light-steel-frame buildings of Type V construction and 4,000 square feet (371m^2) or less in floor area, not located within Earthquake Fault Zones or Seismic Hazard Zones as shown in the most recently published maps from the California Geological Survey (CGS); nonstructural, associated structural or voluntary structural alterations and incidental structural additions or alterations, and structural repairs for other than earthquake damage.

2. A previous report for a specific site may be resubmitted, provided that a reevaluation is made and the report is found to be currently appropriate.

The purpose of the geohazard report shall be to identify geologic and seismic conditions that may require project mitigations. The reports shall contain data which provide an assessment of the nature of the site and potential for earthquake damage based on appropriate investigations of the regional and site geology, project foundation conditions and the potential seismic shaking at the site. The report shall be prepared by a California-certified engineering geologist in consultation with a California-registered geotechnical engineer.

The preparation of the geohazard report shall consider the most recent CGS Note 48; Checklist for the Review of Engineering Geology and Seismology Reports for California Public School, Hospitals, and Essential Services Buildings. In addition, the most recent version of CGS Special Publication 42, Fault Rupture Hazard Zones in California, shall be considered for project sites proposed within an Alquist-Priolo Earthquake Fault Zone. The most recent version of CGS Special Publication 117, Guidelines for Evaluating and Mitigating Seismic Hazards in California, shall be considered for project sites proposed within a Seismic Hazard Zone. All conclusions shall be fully supported by satisfactory data and analysis.

In addition to requirements in Sections 1803.5.11 and 1803.5.12, the report shall include, but shall not be limited to, the following:

1. *Site Geology.*

2. *Evaluation of the known active and potentially active faults, both regional and local.*

3. *Ground-motion parameters, as required by Section 1613 and ASCE 7.*

...

1810.3.1.5 Helical piles. Helical piles shall be designed and manufactured in accordance with accepted engineering practice to resist all stresses induced by installation into the ground and service loads.

1810.3.1.5.1 Helical piles seismic requirements. [OSHPD 2] *For structures assigned to Seismic Design Category D, E or F, capacities of helical piles shall be determined in accordance with Section 1810.3.3 by at least two project specific pre-production tests for each soil profile, size and depth of helical pile. At least two percent of all production piles shall be proof tested to design ultimate strength determined by using load combinations in Section 1605.2.1.*

Helical piles shall satisfy corrosion resistance requirements of ICC-ES AC 358. In addition, all helical pile materials that are subject to corrosion shall include at least 1/16" corrosion allowance.

Helical piles shall not be considered as carrying any horizontal loads.

...

1810.3.10.4 Seismic reinforcement. For structures assigned to *Seismic Design Category* C, a permanent steel casing shall be provided from the top of the micropile down to the point of zero curvature. For structures assigned to *Seismic Design Category* D, E or F, the micropile shall be considered as an alternative system in accordance with Section 104.11. The alternative system design, supporting documentation and test data shall be submitted to the *building official* for review and approval.

1810.3.10.4.1 ***Seismic requirements. [OSHPD 2]*** *For structures assigned to Seismic Design Category D, E or F, a permanent steel casing having a minimum thickness of 3/8" shall be provided from the top of the micropile down to a minimum of 120 percent of the point of zero curvature. Capacity of micropiles shall be determined in accordance with Section 1810.3.3 by at least two project specific pre-production tests for each soil profile, size and depth of micropile. At least two percent of all production piles shall be proof tested to design ultimate strength determined by using load combinations in Section 1605.2.1.*

Steel casing length in soil shall be considered as unbonded and shall not be considered as contributing to friction. Casing shall provide confinement at least equivalent to hoop reinforcing required by ACI 318 Section 18.13.4. ~~21.12.4.~~

Reinforcement shall have Class 1 corrosion protection in accordance with PTI Recommendations for Prestressed Rock and Soil Anchors. Steel casing design shall include at least 1/16" corrosion allowance.

Micropiles shall not be considered as carrying any horizontal loads.

...

~~(All existing amendments that are not revised above shall continue without any change)~~

NOTATION:
Authority: Health and Safety Code Section 129850
Reference: Health and Safety Code Sections 1275 and 129850

CHAPTER 18*A*
SOILS AND FOUNDATIONS

SECTION 1801*A*
GENERAL

1801*A*.1 Scope. The provisions of this chapter shall apply to building and foundation systems. ~~*Refer to Appendix J: Grading, for requirements governing grading, excavation and earthwork construction, including fills and embankments.*~~

1801A.1.1 Application. *The scope of application of Chapter 18A is as follows:*

1. ~~(Reserved for DSA)~~
2. *Applications listed in Section 1.10.1, and 1.10.4 regulated by the Office of Statewide Health Planning and Development (OSHPD). These applications include hospitals, skilled nursing facilities, intermediate care facilities, and correctional treatment centers.*

   Exception: [OSHPD 2] *Single-story Type V skilled nursing or intermediate care facilities utilizing wood-frame or light-steel-frame construction as defined in Health and Safety Code Section 129725, which shall comply with Chapter 18 and any applicable amendments therein.*

1801A.1.2 Amendments in this chapter. *OSHPD adopt this chapter and all amendments.*

Exception: *Amendments adopted by only one agency appear in this chapter preceded with the appropriate acronym of the adopting agency, as follows:*

1. ~~(Reserved for DSA)~~

2. *Office of Statewide Health Planning and Development:*

   [OSHPD 1] *- For applications listed in Section 1.10.1.*
   [OSHPD 4] *- For applications listed in Section 1.10.4.*

...

SECTION 1803*A*
GEOTECHNICAL INVESTIGATIONS

1803*A*.1 General. Geotechnical investigations shall be conducted in accordance with Section 1803*A*.2 and reported in accordance with Section ~~1803.6~~ *1803A.7*. ~~Where required by the *building official* or where geotechnical investigations involve in-situ testing, laboratory testing or engineering calculations, such investigations shall be conducted by a *registered design professional*.~~ *The classification and investigation of the soil shall be made under the responsible charge of a California registered geotechnical engineer. All recommendations contained in geotechnical and geohazard reports shall be subject to the approval of the enforcement agency. All reports shall be prepared and signed by a*

registered geotechnical engineer, certified engineering geologist, and a registered geophysicist, where applicable.

1803*A*.2 Investigations required. Geotechnical investigations shall be conducted in accordance with Sections 1803*A*.3 through ~~1803*A*.5~~ *1803A.6.*

Exceptions: ~~The *building official* shall be permitted to waive the requirement for a geotechnical investigation where satisfactory data from adjacent areas is available that demonstrates an investigation is not necessary for any of the conditions in Sections 1803.5.1 through 1803.5.6 and Sections 1803.5.10 and 1803.5.11.~~

1. *Geotechnical reports are not required for one-story, wood-frame and light-steel-frame buildings of Type II or Type V construction and 4,000 square feet (371 m^2) or less in floor area, not located within Earthquake Fault Zones or Seismic Hazard Zones as shown in the most recently published maps from the California Geological Survey (CGS) or in seismic hazard zones as defined in the Safety Element of the local General Plan. Allowable foundation and lateral soil pressure values may be determined from Table 1806A.2.*

2. *A previous report for a specific site may be resubmitted, provided that a reevaluation is made and the report is found to be currently appropriate.*

...

1803*A*.3 Basis of investigation. Soil classification shall be based on observation and any necessary tests of the materials disclosed by borings, test pits or other subsurface exploration made in appropriate locations. Additional studies shall be made as necessary to evaluate slope stability, soil strength, position and adequacy of load-bearing soils, the effect of moisture variation on soil-bearing capacity, compressibility, liquefaction and expansiveness.

1803*A*.3.1 Scope of investigation. The scope of the geotechnical investigation including the number and types of borings or soundings, the equipment used to drill or sample, the in-situ testing equipment and the laboratory testing program shall be determined by a *registered design professional.*

There shall not be less than one boring or exploration shaft for each 5,000 square feet (465 m^2) of building area at the foundation level with a minimum of two provided for any one building. A boring may be considered to reflect subsurface conditions relevant to more than one building, subject to the approval of the enforcement agency.

Borings shall be of sufficient size to permit visual examination of the soil in place or, in lieu thereof, cores shall be taken.

Borings shall be of sufficient depth and size to adequately characterize sub-surface conditions.

...

1803*A*.5.4 Ground-water table. A subsurface soil investigation shall be performed to determine whether the existing ground-water table is above or within 5 feet (1524 mm) below the elevation of the lowest floor level where such floor is located below the finished ground level adjacent to the foundation.

~~**Exception:** A subsurface soil investigation to determine the location of the ground-water table shall not be required where waterproofing is provided in accordance with Section 1805.~~

...

1803A.6. Geohazard Reports. *Geohazard reports shall be required for all proposed construction.*

Exceptions:

1. *Reports are not required for one-story, wood-frame and light-steel-frame buildings of Type II or Type V construction and 4,000 square feet (371m^2) or less in floor area, not located within Earthquake Fault Zones or Seismic Hazard Zones as shown in the most recently published maps from the California Geological Survey (CGS) or in seismic hazard zones as defined in the Safety Element of the local General Plan; nonstructural, associated structural or voluntary structural alterations, and incidental structural additions or alterations, and structural repairs for other than earthquake damage.*

2. *A previous report for a specific site may be resubmitted, provided that a reevaluation is made and the report is found to be currently appropriate.*

The purpose of the geohazard report shall be to identify geologic and seismic conditions that may require project mitigations. The reports shall contain data which provide an assessment of the nature of the site and potential for earthquake damage based on appropriate investigations of the regional and site geology, project foundation conditions and the potential seismic shaking at the site. The report shall be prepared by a California-certified engineering geologist in consultation with a California-registered geotechnical engineer.

The preparation of the geohazard report shall consider the most recent CGS Note 48: Checklist for the Review of Engineering Geology and Seismology Reports for California Public School, Hospitals, and Essential Services Buildings. In addition, the most recent version of CGS Special Publication 42, Fault Rupture Hazard Zones in California, shall be considered for project sites proposed within an Alquist-Priolo Earthquake Fault Zone. The most recent version of CGS Special Publication 117, Guidelines for Evaluating and Mitigating Seismic Hazards in California, shall be considered for project sites proposed within a Seismic Hazard Zone. All conclusions shall be supported by satisfactory data and analysis.

In addition to requirements in Sections 1803A.5.11 and 1803A.5.12, the report shall include, but shall not be limited to, the following:

1. *Site Geology.*
2. *Evaluation of the known active and potentially active faults, both regional and local.*
3. *Ground-motion parameters, as required by Sections 1613A, 1616A & ASCE*

The three Next Generation Attenuation (NGA) relations used for the 2008 USGS seismic hazards maps for Western United States (WUS) shall be utilized to determine the site-specific ground motion. When supported by data and analysis, other NGA (NGA West 1) relations, that were not used for the 2008 USGS maps, shall be permitted as additions or substitutions. No fewer than three NGA relations shall be utilized.

***1803A.7 Geotechnical* Reporting.** Where geotechnical investigations are required, a written report of the investigations shall be submitted to the *building official* by the permit applicant at the time of *permit* application. *The geotechnical report shall provide completed evaluations of the foundation conditions of the site and the potential geologic/seismic hazards affecting the site. The geotechnical report shall include, but shall not be limited to, site-specific evaluations of design criteria related to the nature and extent of foundation materials, groundwater conditions, liquefaction potential, settlement potential and slope stability. The report shall contain the results of the analyses of problem areas identified in the geohazard report. The geotechnical report shall incorporate estimates of the characteristics of site ground motion provided in the geohazard report.* This geotechnical report shall include, but need not be limited to, the following information:

1. A plot showing the location of the soil investigations.
2. A complete record of the soil boring and penetration test logs and soil samples.
3. A record of the soil profile.

4. Elevation of the water table, if encountered. *Historic high ground water elevations shall be addressed in the report to adequately evaluate liquefaction and settlement potential.*
5. Recommendations for foundation type and design criteria, including but not limited to: bearing capacity of natural or compacted soil; provisions to mitigate the effects of expansive soils; mitigation of the effects of liquefaction, differential settlement and varying soil strength; and the effects of adjacent loads.
6. Expected total and differential settlement.
7. Deep foundation information in accordance with Section 1803*A*.5.5.
8. Special design and construction provisions for foundations of structures founded on expansive soils, as necessary.
9. Compacted fill material properties and testing in accordance with Section 1803*A*.5.8.
10. Controlled low-strength material properties and testing in accordance with Section 1803*A*.5.9.
11. *The report shall consider the effects of stepped footings addressed in Section 1809A.3.*
12. *The report shall consider the effects of seismic hazards in accordance with Section 1803A.6 and shall incorporate the findings of the associated geohazard report.*

***

SECTION 1805*A*
DAMPPROOFING AND WATERPROOFING

1805*A*.1 General. Walls or portions thereof that retain earth and enclose interior spaces and floors below grade shall be waterproofed and damp proofed in accordance with this section, with the exception of those spaces containing groups other than residential and institutional where such omission is not detrimental to the building or occupancy.

Ventilation for crawl spaces shall comply with Section 1203.4.

***

1805A.2 Dampproofing. Where hydrostatic pressure will not occur as determined by Section 1803*A*.5.4, floors and walls ~~for other than wood foundation systems~~ shall be dampproofed in accordance with this section. ~~Wood foundation systems shall be constructed in accordance with AWC PWF.~~

***

SECTION 1807*A*
FOUNDATION WALLS, RETAINING WALLS AND EMBEDDED POSTS AND POLES

1807A.1 Foundation walls. Foundation walls shall be designed and constructed in accordance with Sections 1807*A*.1.1 through 1807*A*.1.6. Foundation walls shall be supported by foundations designed in accordance with Section 1808*A*.

1807*A*.1.1 Design lateral soil loads. Foundation walls shall be designed for the lateral soil loads ~~set forth in Section 1610A.~~ *determined by a geotechnical investigation in accordance with Section 1803A.*

1807*A*.1.2 Unbalanced backfill height. Unbalanced backfill height is the difference in height between the exterior finish ground level and the lower of the top of the concrete footing that supports the foundation wall or the interior finish ground level. Where an interior concrete slab on grade is provided and is in contact with the interior surface of the foundation wall, the unbalanced backfill height shall be permitted to be measured from the exterior finish ground level to the top of the interior concrete slab.

1807*A*.1.3 Rubble stone foundation walls. *Not permitted by OSHPD.* ~~Foundation walls of rough or random rubble stone shall not be less than 16 inches (406 mm) thick. Rubble stone shall not be used for foundation walls of structures assigned to *Seismic Design Category* C, D, E or F.~~

1807*A*.1.4 Permanent wood foundation systems. *Not permitted by OSHPD.* ~~Permanent wood foundation systems shall be designed and installed in accordance with AWC PWF. Lumber and plywood shall be treated in accordance with AWPA U1 (Commodity Specification A, Use Category 4B and Section 5.2) and shall be identified in accordance with Section 2303*A*.1.9.1.~~

1807*A*.1.5 Concrete and masonry foundation walls. Concrete and masonry foundation walls shall be designed in accordance with Chapter 19*A* or 21*A*, as applicable.

~~**Exception:** Concrete and masonry foundation walls shall be permitted to be designed and constructed in accordance with Section 1807.1.6.~~

~~**1807.1.6 Prescriptive design of concrete and masonry foundation walls.** Concrete and masonry foundation walls that are laterally supported at the top and bottom shall be permitted to be designed and constructed in accordance with this section.~~

~~**1807.1.6.1 Foundation wall thickness.** The thickness of prescriptively designed foundation walls shall not be less than the thickness of the wall supported, except that foundation walls of at least 8-inch (203 mm) nominal width shall be permitted to support brick-veneered frame walls and 10-inch-wide (254 mm) cavity walls provided the requirements of Section 1807.1.6.2 or 1807.1.6.3 are met.~~

~~**1807.1.6.2 Concrete foundation walls.** Concrete foundation walls shall comply with the following:~~

~~1. The thickness shall comply with the requirements of Table 1807.1.6.2.~~
~~2. The size and spacing of vertical reinforcement shown in Table 1807.1.6.2 are based on the use of reinforcement with a minimum yield strength of 60,000 psi (414 Mpa). Vertical reinforcement with a minimum yield strength of 40,000 psi (276 Mpa) or 50,000 psi (345 Mpa) shall be permitted, provided the same size bar is used and the spacing shown in the table is reduced by multiplying the spacing by 0.67 or 0.83, respectively.~~

~~**TABLE 1807.1.6.2**~~
~~**CONCRETE FOUNDATION WALLS**[b, c]~~

~~(Deleted Table not shown for clarity)~~

~~3. Vertical reinforcement, when required, shall be placed nearest the inside face of the wall a distance, *d*, from the outside face (soil face) of the wall. The distance, *d*, is equal to the wall thickness, *t*, minus 1.25 inches (32 mm) plus one-half the bar diameter, *db*, [$d = t - (1.25 + db / 2)$]. The reinforcement shall be placed within a tolerance of ± 3/8 inch (9.5 mm) where *d* is less than or equal to 8 inches (203 mm) or ± 1/2 inch (12.7 mm) where *d* is greater than 8 inches (203 mm).~~
~~4. In lieu of the reinforcement shown in Table 1807.1.6.2, smaller reinforcing bar sizes with closer spacings that provide an equivalent cross-sectional area of reinforcement per unit length shall be permitted.~~
~~5. Concrete cover for reinforcement measured from the inside face of the wall shall not be less than ¾ inch (19.1 mm). Concrete cover for reinforcement measured from the outside face of the wall shall not be less than 11/2 inches (38 mm) for No. 5 bars and smaller, and not less than 2 inches (51 mm) for larger bars.~~
~~6. Concrete shall have a specified compressive strength, *fc'*, of not less than 2,500 psi (17.2 MPa).~~
~~7. The unfactored axial load per linear foot of wall shall not exceed 1.2 *t fc'* where *t* is the specified wall thickness in inches.~~

~~**1807.1.6.2.1 Seismic requirements.** Based on the *seismic design category* assigned to the structure in accordance with Section 1613, concrete foundation walls designed using Table 1905.1.7 shall be subject to the following limitations:~~

~~1. *Seismic Design Categories* A and B. No additional seismic requirements, except provide reinforcement around openings in accordance with Section 1909.6.3.~~
~~2. *Seismic Design Categories* C, D, E and F. Tables shall not be used except as allowed for plain concrete members in Section 1908.1.8.~~

~~**1807.1.6.3 Masonry foundation walls.** Masonry foundation walls shall comply with the following:~~

~~1. The thickness shall comply with the requirements of Table 1807.1.6.3(1) for plain masonry walls or Table 1807.1.6.3(2), 1807.1.6.3(3) or 1807.1.6.3(4) for masonry walls with reinforcement.~~
~~2. Vertical reinforcement shall have a minimum yield strength of 60,000 psi (414 Mpa).~~
~~3. The specified location of the reinforcement shall equal or exceed the effective depth distance, *d*, noted in Tables 1807.1.6.3(2), 1807.1.6.3(3) and 1807.1.6.3(4) and shall be measured from the face of the exterior (soil) side of the wall to the center of the vertical reinforcement. The reinforcement shall be placed within the tolerances specified in TMS 602/ACI 530.1/ASCE 6, Article 3.3.B.11 of the specified location.~~

~~**TABLE 1807.1.6.3(1)**~~
~~**PLAIN MASONRY FOUNDATION WALLS[a,b,c]**~~

~~(Deleted Table not shown for clarity)~~

~~4. Grout shall comply with Section 2103.12.~~
~~5. Concrete masonry units shall comply with ASTM C 90.~~
~~6. Clay masonry units shall comply with ASTM C 652 for hollow brick, except compliance with ASTM C 62 or ASTM C 216 shall be permitted where solid masonry units are installed in accordance with Table 1807.1.6.3(1) for plain masonry.~~
~~7. Masonry units shall be laid in running bond and installed with Type M or S mortar in accordance with Section 2103.2.1.~~
~~8. The unfactored axial load per linear foot of wall shall not exceed 1.2 $t f'_m$ where t is the specified wall thickness in inches and f'_m is the specified compressive strength of masonry in pounds per square inch.~~
~~9. At least 4 inches (102 mm) of solid masonry shall be provided at girder supports at the top of hollow masonry unit foundation walls.~~
~~10. Corbeling of masonry shall be in accordance with Section 2104.2. Where an 8 inch (203 mm) wall is corbeled, the top corbel shall not extend~~

~~**TABLE 1807.1.6.3(2)**~~
~~**8 INCH MASONRY FOUNDATION WALLS WITH REINFORCEMENT WHERE d _ 5 INCHES[a,b,c]**~~

~~(Deleted Table not shown for clarity)~~

~~higher than the bottom of the floor framing and shall be a full course of headers at least 6 inches (152 mm) in length or the top course bed joint shall be tied to the vertical wall projection. The tie shall be W2.8 (4.8 mm) and spaced at a maximum horizontal distance of 36 inches (914 mm). The hollow space behind the corbelled masonry shall be filled with mortar or grout.~~

~~**1807.1.6.3.1 Alternative foundation wall reinforcement.** In lieu of the reinforcement provisions for masonry foundation walls in Table 1807.1.6.3(2), 1807.1.6.3(3) or 1807.1.6.3(4), alternative reinforcing bar sizes and spacings having an equivalent cross-sectional area of reinforcement per linear foot (mm) of wall shall be permitted to be used,~~

~~provided the spacing of reinforcement does not exceed 72 inches (1829 mm) and reinforcing bar sizes do not exceed No. 11.~~

~~**1807.1.6.3.2 Seismic requirements.** Based on the *seismic design category* assigned to the structure in accordance with Section 1613, masonry foundation walls designed using Tables 1807.1.6.3(1) through 1807.1.6.3(4) shall be subject to the following limitations:~~

~~1. *Seismic Design Categories* A and B. No additional seismic requirements.~~
~~2. *Seismic Design Category* C. A design using Tables 1807.1.6.3(1) through 1807.1.6.3(4) is~~

~~**TABLE 1807.1.6.3(3)**~~
~~**10-INCH MASONRY FOUNDATION WALLS WITH REINFORCEMENT WHERE d _ 6.75 INCHES**[a, b, c]~~

~~(Deleted Table not shown for clarity)~~

~~subject to the seismic requirements of Section 7.4.3 of TMS 402/ACI 530/ASCE 5.~~
~~3. *Seismic Design Category* D. A design using Tables 1807.1.6.3(2) through 1807.1.6.3(4) is subject to the seismic requirements of Section 7.4.4 of TMS 402/ACI 530/ASCE 5.~~
~~4. *Seismic Design Categories* E and F. A design using Tables 1807.1.6.3(2) through 1807.1.6.3(4) is subject to the seismic requirements of Section 7.4.5 of TMS 402/ACI 530/ASCE 5.~~

~~**TABLE 1807.1.6.3(4)**~~
~~**12-INCH MASONRY FOUNDATION WALLS WITH REINFORCEMENT WHERE d _ 8.75 INCHES**[a,b,c]~~
~~(Deleted Table not shown for clarity)~~

1807*A*.2 Retaining walls. Retaining walls shall be designed in accordance with Sections 1807*A*.2.1 through 1807*A*.2.3. *Freestanding cantilever walls shall be design in accordance with Section 1807A.2:4.*

1807*A*.2.1 General. Retaining walls shall be designed to ensure stability against overturning, sliding, excessive foundation pressure and water uplift. Where a keyway is extended below the wall base with the intent to engage passive pressure and enhance sliding stability, lateral soil pressures on both sides of the keyway shall be considered in the sliding analysis.

1807*A*.2.2 Design lateral soil loads. Retaining walls shall be designed for the lateral soil loads ~~set forth in Section 1610.~~ *determined by a geotechnical investigation in accordance with Section 1803A and shall not be less than eighty percent of the lateral soil loads determined in accordance with Section 1610A. For use with the load combinations, lateral soil loads due to gravity loads surcharge shall be considered gravity loads and seismic earth pressure increases due to earthquake shall be considered as seismic loads.*

...

1807A.2.4 Freestanding Cantilever Walls. *A stability check against the possibility of overturning shall be performed for isolated spread footings which support freestanding cantilever walls. The stability check shall be made by dividing R_p used for the wall by 2.0. The allowable soil pressure may be doubled for this evaluation.*

Exception: *For overturning about the principal axis of rectangular footings with symmetrical vertical loading and the design lateral force applied, a triangular or trapezoidal soil pressure distribution which covers the full width of the footing will meet the stability requirement.*

...

SECTION 1808*A*
FOUNDATIONS

1808*A*.1 General. Foundations shall be designed and constructed in accordance with Sections 1808*A*.2 through 1808*A*.9. Shallow foundations shall also satisfy the requirements of Section 1809*A*. Deep foundations shall also satisfy the requirements of Section 1810*A*.

1808*A*.2 Design for capacity and settlement. Foundations shall be so designed that the allowable bearing capacity of the soil is not exceeded, and that differential settlement is minimized. Foundations in areas with expansive soils shall be designed in accordance with the provisions of Section 1808*A*.6.

The enforcing agency may require an analysis of foundation elements to determine subgrade deformations in order to evaluate their effect on the superstructure, including story drift.

...

1808*A*.8 Concrete foundations. The design, materials and construction of concrete foundations shall comply with Sections1808*A*.8.1 through 1808*A*.8.6 and the provisions of Chapter 19*A*.

~~Exception: Where concrete footings supporting walls of light-frame construction are designed in accordance with Table 1809.7, a specific design in accordance with Chapter 19 is not required.~~

...

TABLE 1808*A*.8.1
MINIMUM SPECIFIED COMPRESSIVE STRENGTH f'_c OF CONCRETE OR GROUT

FOUNDATION ELEMENT OR CONDITION	SPECIFIED COMPRESSIVE STRENGTH, f'_c
~~1. Foundations for structures assigned to Seismic Design Category A, B or C~~	~~2,500 psi~~
~~2a. Foundations for Group R or U occupancies of light-frame construction, two stories or less in height, assigned to Seismic Design Category D, E or F~~	~~2,500 psi~~
~~2b~~ *1.*Foundations for other structures assigned to Seismic Design Category D, E or F	3,000 psi
~~3~~ *2.* Precast nonprestressed driven piles	4,000 psi
~~4~~ *3.* Socketed drilled shafts	4,000 psi
~~5~~ *4.* Micropiles	4,000 psi
~~6~~ *5.* Precast prestressed driven piles	5,000 psi

For SI: 1 pound per square inch = 0.00689MPa.

...

1808*A*.8.6 Seismic requirements. See Section 1905*A* for additional requirements for foundations of structures assigned to *Seismic Design Category* ~~C,~~ D, E or F.

For structures assigned to *Seismic Design Category* D, E or F, provisions of Sections 18.13 of ACI 318 shall apply where not in conflict with the provisions of Sections 1808*A* through 1810*A*.

~~**Exceptions:**~~

~~1. Detached one- and two-family dwellings of light-frame construction and two stories or less above *grade plane* are not required to comply with the provisions of Section 18.13 of ACI 318.~~

~~2. Section 18.13.4.3(a) of ACI 318 shall not apply.~~

...

SECTION 1809*A*
SHALLOW FOUNDATIONS

1809*A*.1 General. Shallow foundations shall be designed and constructed in accordance with Sections 1809*A*.2 through 1809*A*.13.

1809*A*.2 Supporting soils. Shallow foundations shall be built on undisturbed soil, compacted fill material or controlled low-strength material (CLSM). Compacted fill material shall be placed in accordance with Section 1804*A*.5. CLSM shall be placed in accordance with Section 1804*A*.6.

1809*A*.3 Stepped footings. The top surface of footings shall be level. The bottom surface of footings shall be permitted to have a slope not exceeding one unit vertical in 10 units horizontal (10-percent slope). Footings shall be stepped where it is necessary to change the elevation of the top surface of the footing or where the surface of the ground slopes more than one unit vertical in 10 units horizontal (10-percent slope).

Individual steps in continuous footings shall not exceed 18 inches (457 mm) in height and the slope of a series of such steps shall not exceed 1 unit vertical to 2 units horizontal (50% slope) unless otherwise recommended by a geotechnical report. The steps shall be detailed on the drawings. The local effects due to the discontinuity of the steps shall be considered in the design of the foundation.

...

1809*A*.7 Prescriptive footings for light-frame construction. *Not permitted by OSHPD* . ~~Where a specific design is not provided, concrete or masonry-unit footings supporting walls of light frame construction shall be permitted to be designed in accordance with Table 1809.7.~~

~~**TABLE 1809.7**~~
~~**PRESCRIPTIVE FOOTINGS SUPPORTING WALLS OF LIGHT-FRAME CONSTRUCTION**[a,b,c,d,e]~~

~~(Table not shown for clarity)~~

1809*A*.8 Plain concrete footings. *Not permitted by OSHPD.* ~~The edge thickness of plain concrete footings supporting walls of other than light-frame construction shall not be less than 8 inches (203 mm) where placed on soil or rock.~~

~~**Exception:** For plain concrete footings supporting Group R-3 occupancies, the edge thickness is permitted to be 6 inches (152 mm), provided that the footing does not extend beyond a distance greater than the thickness of the footing on either side of the supported wall.~~

1809*A*.9 Masonry-unit footings. *Not permitted by OSHPD.* ~~The design, materials and construction of masonry-unit footings shall comply with Sections 1809.9.1 and 1809.9.2, and the provisions of Chapter 21.~~

~~**Exception:** Where a specific design is not provided, masonry-unit footings supporting walls of light-frame construction shall be permitted to be designed in accordance with Table 1809.7.~~

~~**1809.9.1 Dimensions.** Mansonry-unit footings shall be laid in Type M or S mortar complying with Section 2103.8 and the depth shall not be less than twice the projection beyond the wall, pier or~~

~~column. The width shall not be less than 8 inches (203 mm) wider than the wall supported thereon.~~

~~**1809.9.2 Offsets.** The maximum offset of each course in brick foundation walls stepped up from the footings shall be 11/2 inches (38 mm) where laid in single courses, and 3 inches (76 mm) where laid in double courses.~~

1809A.10 *Reserved.* ~~**Pier and curtain wall foundations.** Except in *Seismic Design Categories* D, E and F, pier and curtain wall foundations shall be permitted to be used to support light frame construction not more than two *stories above grade plane*, provided the following requirements are met:~~

~~1. All load-bearing walls shall be placed on continuous concrete footings bonded integrally with the *exterior wall* footings.~~
~~2. The minimum actual thickness of a load-bearing masonry wall shall not be less than 4 inches (102 mm) nominal or 35/8 inches (92 mm) actual thickness, and shall be bonded integrally with piers spaced 6 feet (1829 mm) on center (o.c.).~~
~~3. Piers shall be constructed in accordance with Chapter 21 and the following:~~
~~3.1. The unsupported height of the masonry piers shall not exceed 10 times their least dimension.~~
~~3.2. Where structural clay tile or hollow concrete masonry units are used for piers supporting beams and girders, the cellular spaces shall be filled solidly with concrete or Type M or S mortar.~~

~~**Exception:** Unfilled hollow piers shall be permitted where the unsupported height of the pier is not more than four times its least dimension.~~

~~3.3. Hollow piers shall be capped with 4 inches (102 mm) of solid masonry or concrete or the cavities of the top course shall be filled with concrete or grout.~~
~~4. The maximum height of a 4-inch (102 mm) load-bearing masonry foundation wall supporting wood frame walls and floors shall not be more than 4 feet (1219 mm) in height.~~
~~5. The unbalanced fill for 4-inch (102 mm) foundation walls shall not exceed 24 inches (610 mm) for solid masonry, nor 12 inches (305 mm) for hollow masonry.~~

...

1809A.12 Timber footings. *Not permitted by OSHPD.* ~~Timber footings shall be permitted for buildings of Type V construction and as otherwise *approved* by the *building official*. Such footings shall be treated in accordance with AWPA U1 (Commodity Specification A, Use Category 4B). Treated timbers are not required where placed entirely below permanent water level, or where used as capping for wood piles that project above the water level over submerged or marsh lands. The compressive stresses perpendicular to grain in untreated timber footings supported upon treated piles shall not exceed 70 percent of the allowable stresses for the species and grade of timber as specified in the AF&PA NDS.~~

...

1809A.14 Pipes and Trenches. *Unless otherwise recommended by the soils report, open or backfilled trenches parallel with a footing shall not be below a plane having a downward slope of 1 unit vertical to 2 units horizontal (50% slope) from a line 9 inches (229 mm) above the bottom edge of the footing, and not closer than 18 inches (457 mm) from the face of such footing.*

Where pipes cross under footings, the footings shall be specially designed. Pipe sleeves shall be provided where pipes cross through footings or footing walls and sleeve clearances shall provide for possible footing settlement, but not less than 1 inch (25 mm) all around pipe.

Exception: *Alternate trench locations and pipe clearances shall be permitted when approved by registered design professional in responsible charge and the enforcement agent.*

...

SECTION 1810*A*
DEEP FOUNDATIONS

1810*A*.1 General. Deep foundations shall be analyzed, designed, detailed and installed in accordance with Sections 1810*A*.1 through 1810*A*.4.

...

1810*A*.3.1.5 Helical piles. Helical piles shall be designed and manufactured in accordance with accepted engineering practice to resist all stresses induced by installation into the ground and service loads.

1810A.3.1.5.1 Helical Piles Seismic Requirements. *For structures assigned to Seismic Design Category D, E or F, capacities of helical piles shall be determined in accordance with Section 1810A.3.3 by at least two project specific pre-production tests for each soil profile, size and depth of helical pile. At least two percent of all production piles shall be proof tested to the load determined in accordance with Section 1616A.1.16.*

Helical piles shall satisfy corrosion resistance requirements of ICC-ES AC 358. In addition, all helical pile materials that are subject to corrosion shall include at least 1/16" corrosion allowance.

Helical piles shall not be considered as carrying any horizontal loads.

...

1810*A*.3.2 Materials. The materials used in deep foundation elements shall satisfy the requirements of Sections 1810*A*.3.2.1 through 1810*A*.3.2.8, as applicable.

...

~~**1810.3.2.1.2 ACI 318 Equation (25.7.3.3).** Where this chapter requires detailing of concrete deep foundation elements in accordance with Section 18.7.5.4 of ACI 318, compliance with Equation (25.7.3.3) of ACI 318 shall not be required.~~

...

1810*A*.3.2.4 Timber. *Not permitted by OSHPD.* ~~Timber deep foundation elements shall be designed as piles or poles in accordance with AF&PA NDS. Round timber elements shall conform to ASTM D 25. Sawn timber elements shall conform to DOC PS-20.~~

~~**1810.3.2.4.1 Preservative treatment.** Timber deep foundation elements used to support permanent structures shall be treated in accordance with this section unless it is established that the tops of the untreated timber elements will be below the lowest ground-water level assumed to exist during the life of the structure. Preservative and minimum final retention shall be in accordance with AWPA U1 (Commodity Specification E, Use Category 4C) for round timber elements and AWPA U1 (Commodity Specification A, Use Category 4B) for sawn timber elements. Preservative-treated timber elements shall be subject to a quality control program administered by an *approved agency*. Element cutoffs shall be treated in accordance with AWPA M4.~~

...

1810A.3.3.1.2 Load tests. Where design compressive loads are greater than those determined using the allowable stresses specified in Section 1810A.3.2.6, where the design load for any deep foundation element is in doubt, *where driven deep foundation elements are installed by means other than a pile hammer,* or where cast-in-place deep foundation elements have an enlarged base formed either by compacting concrete or by driving a precast base, control test elements shall be tested in accordance with ASTM D 1143 *including Procedure G: Cyclic Loading Test* or ASTM D 4945. At least one element shall be load tested in each area of uniform subsoil conditions. Where required by the building official, additional elements shall be load tested where necessary to establish the

safe design capacity. The resulting allowable loads shall not be more than one-half of the ultimate axial load capacity of the test element as assessed by one of the published methods listed in Section 1810A.3.3.1.3 with consideration for the test type, duration and subsoil. The ultimate axial load capacity shall be determined by a registered design professional with consideration given to tolerable total and differential settlements at design load in accordance with Section 1810A.2.3. In subsequent installation of the balance of deep foundation elements, all elements shall be deemed to have a supporting capacity equal to that of the control element where such elements are of the same type, size and relative length as the test element; are installed using the same or comparable methods and equipment as the test element; are installed in similar subsoil conditions as the test element; and, for driven elements, where the rate of penetration (e.g., net displacement per blow) of such elements is equal to or less than that of the test element driven with the same hammer through a comparable driving distance, *or where the downward pressure and torque on such elements is greater than or equal to that applied to the test element that determined the ultimate axial load capacity at a comparable driving distance*.

...

1810A.3.3.1.5 Uplift capacity of a single deep foundation element. Where required by the design, the uplift capacity of a single deep foundation element shall be determined by an approved method of analysis based on a minimum factor of safety of three or by load tests conducted in accordance with ASTM D 3689. The maximum allowable uplift load shall not exceed the ultimate load capacity as determined in Section 1810A.3.3.1.2, using the results of load tests conducted in accordance with ASTM D3689 *including the Cyclic Loading Procedure*, divided by a factor of safety of two.

Exception: Where uplift is due to wind or seismic loading, the minimum factor of safety shall be two where capacity is determined by an analysis and one and a half where capacity is determined by load tests.

...

1810A.3.3.2 Allowable lateral load. Where required by the design, the lateral load capacity of a single deep foundation element or a group thereof shall be determined by an *approved* method of analysis or by lateral load tests *in accordance with ASTM D3966, including the Cyclic Loading Procedure,* to at least twice the proposed design working load. The resulting allowable load shall not be more than one-half of the load that produces a gross lateral movement of 1 inch (25 mm) at the lower of the top of foundation element and the ground surface, unless it can be shown that the predicted lateral movement shall cause neither harmful distortion of, nor instability in, the structure, nor cause any element to be loaded beyond its capacity.

...

1810*A*.3.5.3.3 Structural Steel Sheet Piling. Individual sections of structural steel sheet piling shall conform to the profile indicated by the manufacturer, and shall conform to general requirements specified by ASTM A6.

Installation of sheet piling shall satisfy inspection, monitoring, and observation requirements in Sections 1812A.6 and 1812A.7.

...

1810*A*.3.8.3 Precast prestressed piles. Precast prestressed concrete piles shall comply with the requirements of Sections 1810*A*.3.8.3.1 through 1810*A*.3.8.3.3.

...

1810*A*.3.8.3.2 Seismic reinforcement in Seismic Design Category C. *Not permitted by OSHPD.* ~~For structures assigned to *Seismic Design Category C* in accordance with Section 1613, precast prestressed piles shall have transverse reinforcement in~~

~~accordance with this section. The volumetric ratio of spiral reinforcement shall not be less than the amount required by the following formula for the upper 20 feet (6096 mm) of the pile.~~

~~$\rho_s = 0.12 f'_c / f_{yh}$ **(Equation 18-5)**~~

~~where:~~
~~f'_c = Specified compressive strength of concrete, psi (MPa).~~
~~f_{yh} = Yield strength of spiral reinforcement ≤ 85,000 psi (586 MPa).~~
~~ρ_s = Spiral reinforcement index (vol. spiral/vol. core).~~

~~At least one-half the volumetric ratio required by Equation 18-5 shall be provided below the upper 20 feet (6096 mm) of the pile.~~

1810*A*.3.8.3.3 Seismic reinforcement in Seismic Design Categories D through F. For structures assigned to *Seismic Design Category* D, E or F, ~~*in accordance with Section 1613A,*~~ precast prestressed piles shall have transverse reinforcement in accordance with the following:

...

~~This required amount of spiral reinforcement is permitted to be obtained by providing an inner and outer spiral.~~

...

1810*A*.3.9.4.2.1 Site Classes A through D. For Site Class A, B, C or D sites, transverse confinement reinforcement shall be provided in the element in accordance with Sections 18.7.5.2, 18.7.5.3 and 18.7.5.4 of ACI 318 within three times the least element dimension *at* ~~of~~ the bottom of the pile cap. A transverse spiral reinforcement ratio of not less than one-half of that required in Section 18.7.5.4 ~~(a)~~ of ACI 318 shall be permitted *for concrete deep foundation elements.*

1810*A*.3.9.4.2.2 Site Classes E and F. For Site Class E or F sites, transverse confinement reinforcement shall be provided in the element in accordance with Sections 18.7.5.2, 18.7.5.3 and 18.7.5.4 of ACI 318 within seven times the least element dimension *at* ~~of~~ the *bottom of the* pile cap and within seven times the least element dimension *at* ~~of~~ the interfaces of strata that are hard or stiff and strata that are liquefiable or are composed of soft- to medium-stiff clay.

...

1810*A*.3.10 Micropiles. Micropiles shall be designed and detailed in accordance with Sections 1810*A*.3.10.1 through 1810*A*.3.10.4.

...

~~**1810A.3.10.4 Seismic reinforcement.** For structures assigned to *Seismic Design Category* C, a permanent steel casing shall be provided from the top of the micropile down to the point of zero curvature. For structures assigned to *Seismic Design Category* D, E or F, the micropile shall be considered as an alternative system in accordance with Section 104.11. The alternative system design, supporting documentation and test data shall be submitted to the *building official* for review and approval.~~

1810A.3.10.4 Seismic requirements. *For structures assigned to Seismic Design Category D, E, or F, a permanent steel casing having a minimum thickness of 3/8" shall be provided from the top of the micropile down to a minimum of 120 percent of the point of zero curvature. Capacity of micropiles shall be determined in accordance with Section 1810A.3.3 by at least two project specific pre-production tests for each soil profile, size and depth of micropile. At least two percent of all production piles shall be proof tested to the load determined in accordance with Section* 1616A.1.16.~~1615A.1.10.~~

Steel casing length in soil shall be considered as unbonded and shall not be considered as contributing to friction. Casing shall provide confinement at least equivalent to hoop reinforcing required by ACI 318 Section 18.13.4. ~~21.12.4~~
Reinforcement shall have Class 1 corrosion protection in accordance with PTI Recommendations for Prestressed Rock and Soil Anchors. Steel casing design shall include at least 1/16" corrosion allowance.

Micropiles shall not be considered as carrying any horizontal loads.

...

1810A.4 Installation. Deep foundations shall be installed in accordance with Section 1810A.4. Where a single deep foundation element comprises two or more sections of different materials or different types spliced together, each section shall satisfy the applicable conditions of installation.

1810A.4.1 Structural integrity. Deep foundation elements shall be installed in such a manner and sequence as to prevent distortion or damage that may adversely affect the structural integrity of adjacent structures or of foundation elements being installed or already in place and as to avoid compacting the surrounding soil to the extent that other foundation elements cannot be installed properly.

...

1810A.4.1.5 Defective timber piles. *Not permitted by OSHPD.* ~~Any substantial sudden increase in rate of penetration of a timber pile shall be investigated for possible damage. If the sudden increase in rate of penetration cannot be correlated to soil strata, the pile shall be removed for inspection or rejected.~~

...

SECTION 1811A
PRESTRESSED ROCK AND SOIL FOUNDATION ANCHORS

1811A.1 General. *The requirements of this section address the use of vertical rock and soil anchors in resisting seismic or wind overturning forces resulting in tension on shallow foundations.*

1811A.2 Adoption. *Except for the modifications as set forth in Sections 1811A.3 and 1811A.4, all Prestressed Rock and Soil Foundation Anchors shall comply with ~~be designed in accordance with~~ PTI Recommendations for Prestressed Rock and Soil Anchors.*

1811A.3 Geotechnical Requirements. *Geotechnical report for the Prestressed Rock & Soil Foundation Anchors shall address the following:*

1. *Minimum diameter and minimum spacing for the anchors including consideration of group effects.*
2. *Maximum unbonded length and minimum bonded length of the tendon.*
3. *Maximum recommended anchor tension capacity based upon the soil or rock strength / grout bond and anchor depth / spacing.*
4. *Allowable bond stress at the ground / grout interface and applicable factor of safety for ultimate bond stress.*
5. *Anchor axial tension stiffness recommendations at the anticipated anchor axial tension displacements, when required for structural analysis.*
6. *Minimum grout pressure for installation and post-grout pressure.*
7. *Class I Corrosion Protection is required for all permanent anchors. Geotechnical report shall specify the corrosion protection recommendations for temporary anchors.*
8. *Performance test shall be at a minimum of 1.6 times the design loads. There shall be a minimum of two preproduction test anchors. Preproduction test anchors shall be tested to ultimate load or 0.80 times the specified minimum tensile strength of*

the tendon. A Creep test is required for all prestressed anchors with greater than 10 kips of lock-off prestressing load.

9. *Lock-off prestressing load requirements.*
10. *Acceptable Drilling methods.*
11. *Geotechnical observation and monitoring requirements.*

1811A.4 Structural Requirements.

1. *Tendons shall be thread-bar anchors conforming to ASTM A722.*
2. *The anchors shall be placed vertical.*
3. *Design Loads shall be based upon the load combinations in Section 1605A.3.1 and shall not exceed 60 percent of the specified minimum tensile strength of the tendons.*
4. *Ultimate Load shall be based upon Section 1616A.1.16 ~~1615A.1.10~~ and shall not exceed 80 percent of the specified minimum tensile strength of the tendons.*
5. *The anchor shall be designed to fail in grout bond to the soil or rock before pullout of the soil wedge by group effect.*
6. *Foundation design shall incorporate the effect of lock-off loads.*
7. *Design shall account for as-built locations of soil anchors considering all the acceptable construction tolerances.*
8. *Design shall account for both short and long term deformation.*
9. *Enforcement agency may require consideration of anchor deformation in evaluating deformation compatibility or building drift where it may be significant.*

SECTION 1812A
EARTH RETAINING SHORING

(Relocated from Section J106.2) ~~J106.2 Earth retaining shoring. [OSHPD 1 & 4]~~

1812A.1 ~~J106.2.1~~ General. *The requirements of this section shall apply to temporary and permanent earth retaining shoring using soldier piles and lagging with or without tie-back anchors in soil or rock, only when existing or new ~~OSHPD 1 or 4~~ facilities are affected. Shoring used as construction means and methods only, which does not affect existing or new ~~OSHPD 1 or 4~~ facilities, are not regulated by this section ~~OSHPD~~ and shall satisfy the requirements of the authorities having jurisdiction.*

Design, construction, testing, and inspection shall satisfy the requirements of this code except as modified in Sections 1812A.2 ~~J106.2.2~~ through ~~J106.2.8~~ 1812A.8.

1812A.2 ~~J106.2.2~~ Duration. *Shoring shall be considered temporary when elements of the shoring will be exposed to site conditions for a period of less than one (1) year, and shall be considered permanent otherwise. Permanent shoring shall account for the increase in lateral soil pressure due to earthquake. At the end of the construction period, the existing and new structures shall not rely on the temporary shoring for support in anyway. Wood components shall not be used for permanent shoring lasting more than two (2) years. Wood components of the temporary shoring that may affect the performance of permanent structure shall be removed after the shoring is no longer required.*

All components of the shoring shall have corrosion protection or preservative treatment for their expected duration. Wood components of the temporary shoring that will not be removed shall be treated in accordance with AWPA U1 (Commodity Specification A, Use Category 4B and Section 5.2), and shall be identified in accordance with Section 2303.1.9.1 ~~2303.1.8.1~~.

1812A.3 ~~J106.2.3~~ Surcharge. *Surcharge pressure due to footings, traffic, or other sources shall be considered in design. If the footing surcharge is located within the semi-circular distribution or bulb of earth pressure (when shoring is located close to a footings), lagging shall be designed for lateral earth pressure due to footing surcharge. Soil arching effects may be considered in the design of lagging. Underpinning of the footing may be used in lieu of designing the shoring and lagging for surcharge pressure. Alternatively, continuously contacting drilled pier shafts near the*

footings shall be permitted. The lateral surcharge design pressure shall be derived using Boussinesq equations modified for the distribution of stresses in an elastic medium due to a uniform, concentrated or line surface load as appropriate and soil arching effects.

1812A.4 ***~~J106.2.4~~*** ***Design and testing.*** *Except for the modifications as set forth in Sections 1812A.4.1 ~~J106.2.4.1 and J106.2.4.2~~ through 1812A.4.3 below, all Prestressed Rock and Soil Tie-back Anchors shall ~~be designed and tested in accordance~~ comply with PTI Recommendations for Prestressed Rock and Soil Anchors (PTI-2004).*

1812A.4.1 ***~~J106.2.4.1~~*** ***Geotechnical requirements.*** *The geotechnical report for the earth retaining shoring shall address the following:*

1. *Minimum diameter and minimum spacing for the anchors including consideration of group effects.*
2. *Maximum unbonded length and minimum bonded length of the tie-back anchors.*
3. *Maximum recommended anchor tension capacity based upon the soil or rock strength / grout bond and anchor depth / spacing.*
4. *Allowable bond stress at the ground / grout interface and applicable factor of safety for ultimate bond stress for the anchor. For permanent anchors, a minimum factor of safety of 2.0 shall be applied to ground soil interface as required by PTI-2004 Section 6.6.*
5. *Minimum grout pressure for installation and post-grout pressure for the anchor. The presumptive post grout pressure of 300 psi may be used for all soil type.*
6. *Class I Corrosion Protection is required for all permanent anchors. The geotechnical report shall specify the corrosion protection recommendations for temporary anchors.*
7. *Performance test for the anchors shall be at a minimum of two (2) times the design loads and shall not exceed 80% of the specified minimum tensile strength of the anchor rod. A creep test is required for all prestressed anchors that are performance tested. All production anchors shall be tested at 150% of design loads and shall not be greater than 70% of the specified minimum tensile strength of the anchor rod.*
8. *Earth pressure, surcharge pressure, and the seismic increment of earth pressure loading, when applicable.*
9. *Maximum recommended lateral deformation at the top of the soldier pile, at the tie-back anchor locations, and the drilled pier concrete shafts at the lowest grade level.*
10. *Allowable vertical soil bearing pressure, friction resistance, and lateral passive soil resistance for the drilled pier concrete shafts and associated factors of safety for these allowable capacities.*
11. *Soil-pier shaft / pile interaction assumptions and lateral soil stiffness to be used in design for drilled pier concrete shaft or pile lateral loads.*
12. *Acceptable drilling methods.*
13. *Geotechnical observation and monitoring recommendations.*

1812A.4.2 ***~~J106.2.4.2~~*** ***Structural requirements:***

1. *Tendons shall be thread-bar anchors conforming to ASTM A 722.*
2. *Anchor design loads shall be based upon the load combinations in Section 1605A.3.1 and shall not exceed 60 percent of the specified minimum tensile strength of the tendons.*
3. *The anchor shall be designed to fail in grout bond to the soil or rock before pullout of the soil wedge.*
4. *Design of shoring system shall account for as-built locations of soil anchors considering all specified construction tolerances in Section 1812A.8 ~~J106.2.8~~.*
5. *Design of shoring system shall account for both short and long term deformation.*

1812A.4.3 ~~***J106.2.4.3***~~ ***Testing of tie-back anchors:***

1. *The geotechnical engineer shall keep a record at job site of all test loads, total anchor movement, and report their accuracy.*
2. *If a tie-back anchor initially fails the testing requirements, the anchor shall be permitted to be re-grouted and retested. If anchor continues to fail, the followings steps shall be taken:*
   a. *The contractor shall determine the cause of failure – variations of the soil conditions, installation methods, materials, etc.*
   b. *Contractor shall propose a solution to remedy the problem. The proposed solution will need to be reviewed and approved by geotechnical engineer, shoring design engineer, and the building official.*
3. *After a satisfactory test, each anchor shall be locked-off in accordance with Section 8.4 of PTI 2004.*
4. *The shoring design engineer shall specify design loads for each anchor.*

1812A.5 ~~***J106.2.5***~~ ***Construction:*** *The construction procedure shall address the following:*

1. *Holes drilled for piles / tie-back anchors shall be done without detrimental loss of ground, sloughing or caving of materials and without endangering previously installed shoring members or existing foundations.*
2. *Drilling of earth anchor shafts for tie-backs shall occur when the drill bench reaches two to three feet below the level of the tie-back pockets.*
3. *Casing or other methods shall be used where necessary to prevent loss of ground and collapse of the hole.*
4. *The drill cuttings from earth anchor shaft shall be removed prior to anchor installation.*
5. *Unless tremie methods are used, all water and loose materials shall be removed from the holes prior to installing piles / tie-backs.*
6. *Tie-back anchor rods with attached centralizing devices shall be installed into the shaft or through the drill casing. Centralizing device shall not restrict movement of the grout.*
7. *After lagging installation, voids between lagging and soil shall be backfilled immediately to the full height of lagging.*
8. *The soldier piles shall be placed within specified tolerances in the drilled hole and braced against displacement during grouting. Fill shafts with concrete up to top of footing elevation, rest of the shaft can generally be filled with lean concrete. Excavation for lagging shall not be started until concrete has achieved sufficient strength for all anticipated loads as determined by the shoring design engineer.*
9. *Where boulders and / or cobbles have been identified in the geotechnical reports, contractor shall be prepared to address boulders and / or cobbles that may be encountered during the drilling of soldier piles and Tie-back anchors.*
10. *The grouting equipment shall produce grout free of lumps and indispensed cement. The grouting equipment shall be sized to enable the grout to be pumped in continuous operation. The mixer shall be capable of continuously agitating the grout.*
11. *The quantity of grout and grout pressure shall be recorded. The grout pressure shall be controlled to prevent excessive heave in soils or fracturing rock formations.*
12. *If post-grouting is required, post grouting operation shall be performed after initial grout has set for 24-hours in the bond length only. Tie-backs shall be grouted over a sufficient length (anchor bond length) to transfer the maximum anchor force to the anchor grout.*
13. *Testing of anchors may be performed after post-grouting operations provided grout has reached strength of 3,000 psi as required by PTI-2004 Section 6.11.*
14. *Anchor rods shall be tensioned straight and true. Excavation directly below the anchors shall not continue before those anchors are tested.*

1812A.6 ~~***J106.2.6***~~ ***Inspection, survey monitoring, and observation***

1. *The shoring design engineer or his designee shall make periodic inspections of the job site for the purpose of observing the installation of shoring system, testing of tie-back anchors, and*

monitoring of survey.

2. *Testing, inspection, and observation shall be in accordance with testing, inspection and observation requirements approved by the building official. The following activities and materials shall be tested, inspected, or observed by the special inspector and geotechnical engineer:*
   a. *Sampling and testing of concrete in soldier pile and tie-back anchor shafts.*
   b. *Fabrication of tie-back anchor pockets on soldier beams*
   c. *Installation and testing of tie-back anchors.*
   d. *Survey monitoring of soldier pile and tie-back load cells.*
   e. *Survey Monitoring of existing buildings.*
3. *A complete and accurate record of all soldier pile locations, depths, concrete strengths, tie-back locations and lengths, tie-back grout strength, quantity of concrete per pile, quantity of grout per tie-back and applied tie-back loads shall be maintained by the special inspector and geotechnical engineer. The shoring design engineer shall be notified of any unusual conditions encountered during installation.*
4. *Calibration data for each test jack, pressure gauge, and master pressure gauge shall be verified by the special inspector and geotechnical engineer. The calibration tests shall be performed by an independent testing laboratory and within 120 calender days of the data submitted.*
5. *Monitoring points shall be established at the top and at the anchor heads of selected soldier piles and at intermediate intervals as considered appropriate by the geotechnical engineer.*
6. *Control points shall be established outside the area of influence of the shoring system to ensure the accuracy of the monitoring readings.*

7. *The periodic basis of shoring monitoring, as a minumum, shall be as follows:*
   a. *Intitial monitoring shall be performed prior to any excavation.*
   b. *Once excavation has begun, the periodic readings shall be taken weekly until excavation reaches the estimated subgrade elevation and the permanent foundation is complete.*
   c. *If performance of the shoring is within established guidelines, shoring design engineer may permit the periodic readings to be bi-weekly. Once initiated, bi-weekly readings shall continue until the building slab at ground floor level is completed and capable of transmitting lateral loads to the permanent structure. Thereafter, readings can be monthly.*
   d. *Where the building has been designed to resist lateral earth pressures, the periodic monitoring of the soldier piles and adjacent structure can be discontinued once the ground floor diaphragm and subterranean portion of the structure is capable of resisting lateral soil loads and approved by the shoring design engineer, geotechnical engineer, and the building official.*
   e. *Additional readings shall be taken when requested by special inspector, shoring design engineer, geotechnical engineer, or the building official.*

8. *Monitoring reading shall be submitted to shoring design engineer, engineer in responsible charge, and the building official within 3 working days after they are conducted. Monitoring readings shall be accurate to within 0.01 feet. Results are to be submitted in tabular form showing at least the intial date of monitoring and reading, current monitoring date and reading and difference between the two readings.*
9. *If the total cummulative horizontal or vertical movement (from start of construction) of the existing buildings reaches ½" or soldier piles reaches 1" all excavation activities shall be suspended. The geotechnical and shoring design engineer shall determine the cause of movement, if any, and recommend corrective measures, if necessary, before excavation continues.*
10. *If the total cummulative horizontal or vertical movement (from start of construction) of the existing buildings reaches 3/4" or soldier piles reaches 1 ½" all excavation activities shall be suspended until the causes, if any, can be determined. Supplemental shoring shall be devised to eliminate further movement and the building official shall review and approve the supplemental shoring before excavation continues.*
11. *Monitoring of Tie-back Anchor Loads:*

a. *Load cells shall be installed at the tie-back heads adjacent to buildings at maximum interval of 50', with a minimum of one load cells per wall.*
b. *Load cell readings shall be taken once a day during excavation and once a week during the remainder of construction.*
c. *Load cell readings shall be submitted to the geotechnical engineer, shoring design engineer, engineer in responsible charge, and the building official.*
d. *Load cell readings can be terminated once the temporary shoring no longer provides support for the buildings.*

1812A.7 ~~J106.2.7~~ Monitoring of existing OSHPD 1 and 4 structures

1. *The contractor shall complete a written and photographic log of all existing OSHPD 1 & 4 structures within 100 ft or three times depth of shoring, prior to construction. A licensed surveyor shall document all existing substantial cracks in adjacent existing structures.*
2. *Contractor shall document existing condition of wall cracks adjacent to shoring walls prior to start of construction.*
3. *Contractor shall monitor existing walls for movement or cracking that may result from adjacent shoring.*
4. *If excessive movement or visible cracking occurs, contractor shall stop work and shore / reinforce excavation and contact shoring design engineer and the building official.*
5. *Monitoring of the existing structure shall be at reasonable intervals as required by the registered design professional subject to approval of the building official. Monitoring shall be performed by a licensed surveyor and shall consist of vertical and lateral movement of the existing structures. Prior to starting shoring installation a pre-construction meeting shall take place between the contractor, shoring design engineer, surveyor, geotechnical engineer, and the building official to identify monitoring locations on existing buildings.*
6. *If in the opinion of the building official or shoring design engineer, monitoring data indicate excessive movement or other distress, all excavation shall cease until the geotechnical engineer and shoring design engineer investigates the situation and makes recommendations for remediation or continuing.*
7. *All reading and measurements shall be submitted to the building official and shoring design engineer.*

1812A.8 ~~J106.2.8~~ Tolerances. *Following tolerances shall be specified on the construction documents.*

1. *Soldier Piles:*
   i. *Horizontal and vertical construction tolerances for the soldier pile locations.*
   ii. *Soldier pile plumbness requirements (angle with vertical line).*

2. *Tie-back Anchors:*
   i. *Allowable deviation of anchor projected angle from specified vertical and horizontal design projected angle.*
   ii. *Anchor clearance to the existing/new utilities and structures.*

[Relocated from Section J112]

Section 1813A ~~J112~~
Vibro Stone Columns for Ground Improvement

1813A.1 ~~J112.1~~ General. ~~[OSHPD 1, 2, & 4]~~ *This section shall apply to Vibro Stone Columns (VSCs) for ground improvement using unbounded aggregate materials. Vibro stone column provisions in this section are intended to increase bearing capacity, reduce settlements, and mitigate liquefaction for shallow foundations. These requirements shall not be used for grouted or bonded stone columns, ground improvement for deep foundation elements, or changing site class. VSCs shall not be considered as a deep foundation element.*

Ground improvement shall be installed under the entire building/structure footprint and not under isolated foundation elements only.

Design, construction, testing, and inspection shall satisfy the requirements of this code except as modified in Sections 1813A.2 ~~J112.2~~ through ~~J112.5~~ 1813A.5.

1813A.2 ~~J112.2~~ Geotechnical Report. *The geotechnical report shall specify vibro stone column requirements to ensure uniformity in total and differential immediate settlement, long term settlement, and earthquake induced settlement.*

1. *Soil compaction shall be sufficient to mitigate potential for liquefaction as described in California Geological Survey (CGS) Special Publication 117A (SP-117A): Guidelines for Evaluating and Mitigating Seismic Hazard in California.*

2. *Area replacement ratio for the compaction elements and the basis of its determination shall be explained. Minimum factor of safety for soil compaction shall be in accordance with SP-117A.*

3. *Depth of soil compaction elements and extent beyond the footprint of structures/foundation shall be defined. Extent beyond the foundation shall be half the depth of the VSCs with a minimum of 10' or an approved alternative.*

4. *Minimum diameter and maximum spacing of soil compaction elements shall be specified. VSC's shall not be less than 2 feet in diameter and center to center spacing shall not exceed 8 feet.*

5. *The modulus of subgrade reactions for shallow foundations shall account for the presence of compaction elements.*

6. *The modulus of subgrade reactions, long-term settlement, and post-earthquake settlement shall be specified along with expected total and differential settlements for design.*

7. *The acceptance criteria for Friction Cone and Piezocone Penetration Testing ~~Cone Penetration Test (CPT)~~ in accordance with ASTM D 5778 ~~3441~~ complemented by Standard Penetration Test (SPT) in accordance with ASTM D 1586, if necessary, to verify soil improvement shall be specified*

8. *The requirements for special inspection and observation by the Geotechnical engineer shall be specified.*

9. *A Final Verified Report (FVR) documenting the installation of the ground improvement system and confirming that the ground improvement acceptance criteria have been met shall be prepared by the Geotechnical Engineer and submitted to the enforcement agency for review and approval.*

1813A.3 ~~J112.3~~ Shallow Foundations. *VSCs under the shallow foundation shall be located symmetrically around the centroid of the footing or load.*

1. *There shall be a minimum of four stone columns under each isolated or continuous/combined footing or approved equivalent.*
2. *The VSCs or deep foundation elements shall not be used to resist tension or overturning uplift from the shallow foundations.*
3. *The foundation design for the shallow foundation shall consider the increased vertical stiffness of the VSCs as point supports for analysis, unless it is substantiated that the installation of the VSCs result in improvement of the surrounding soils such that the modulus of subgrade reaction, long term settlement, and post-earthquake settlement can be considered uniform throughout.*

1813A.4 ~~*J112.4*~~ ***Installation.*** *VSCs shall be installed with vibratory probes. Vertical columns of compacted unbounded aggregate shall be formed through the soils to be improved by adding gravel near the tip of the vibrator and progressively raising and re-penetrating the vibrator which will results in the gravel being pushed into the surrounding soil.*

Gravel aggregate for VSCs shall be well graded with a maximum size of 6" and not more than 10% smaller than 3/8" after compaction.

1813A.5 ~~*J112.5*~~ ***Construction Documents.*** *Construction documents for VSCs, as a minimum, shall include the following:*

1. *Size, depth, and location of VSCs.*
2. *Extent of soil improvements along with building/structure foundation outlines.*
3. *Field verification requirements and acceptance criteria using CPT/SPT.*
4. *The locations where CPT/SPT shall be performed.*
5. *The Testing, Inspection and Observation (TIO) program shall indicate the inspection and observation required for the VSCs.*

(All existing amendments that are not revised above shall continue without any change.)

NOTATION:
Authority: Health and Safety Code Section 129850
Reference: Health and Safety Code Sections 1275, 129850 and 129790

CHAPTER 19
CONCRETE

SECTION 1901
GENERAL

1901.1 Scope. The provisions of this chapter shall govern the materials, quality control, design and construction of concrete used in structures.

...

1901.3 Anchorage to concrete. Anchorage to concrete shall be in accordance with ACI 318 as amended in Section 1905, and applies to cast-in (headed bolts, headed studs and hooked J- or L-bolts, post installed expansion (torque controlled and displacement-controlled), undercut and adhesive anchors.

1901.3.1 ~~*1908.1.1*~~ ***Power Actuated Fasteners. [OSHPD 2]*** *Power actuated fasteners qualified in accordance with ICC-ES AC 70 shall be deemed to satisfy the requirements of ASCE 7 Section 13.4.5.* ~~*this section.*~~

Power actuated fasteners shall be permitted in seismic shear for components exempt from construction documents review by ASCE 7 Section 13.1.4 and for interior non-bearing non-shear wall partitions only. Power actuated fastener shall not be used to anchor seismic bracing, exterior cladding or curtain wall systems.

> ***Exception:*** *Power actuated fasteners in steel to steel connections prequalified for seismic application by cyclic tests in accordance with ICC-ES AC 70 shall be permitted for seismic design.*

1901.3.2 ~~*1909.1.1*~~ ***Mechanical Anchors and Specialty Inserts. [OSHPD 2]*** *Mechanical anchors qualified in accordance with ICC-ES AC 193 shall be deemed to satisfy the requirements of this section.*

Specialty inserts, including cast-in-place specialty inserts, tested in accordance with ICC-ES ~~*AC*~~

~~193~~ AC 232 or AC 446 shall be deemed to satisfy the requirements of this section.

1901.3.3 ~~1909.1.2~~ Post-Installed Adhesive Anchors. [OSHPD 2] Adhesive anchors qualified in accordance with ICC-ES AC 308 shall be deemed to satisfy the requirements of this section.

1901.3.4 ~~1909.2~~ Tests for Post-Installed Anchors in Concrete. [OSHPD 2] When post-installed anchors are used in lieu of cast-in place bolts, the installation verification test loads, frequency, and acceptance criteria shall be in accordance with this section.

1901.3.4.1 ~~1909.2.1~~ General. Test loads or torques and acceptance criteria shall be shown on the construction documents.

If any anchor fails testing, all anchors of the same type shall be tested, which are installed by the same trade, not previously tested until twenty (20) consecutive anchors pass, then resume the initial test frequency.

1901.3.4.2 ~~1909.2.5~~ Testing Procedure. The test procedure shall be as permitted by an approved test report using criteria adopted in this code. All ~~other~~ post-installed anchors shall be tension tested.

Exception: Torque controlled post installed anchors shall be permitted to be tested using torque based on an approved test report using criteria adopted in this code.

Alternatively, ~~M~~ manufacturer's recommendation for testing may be approved by the enforcement agency based on an approved test report using criteria adopted in this code.

1901.3.4.3 ~~1909.2.3~~ Test Frequency. When post-installed anchors are used for sill plate bolting applications, 10 percent of the anchors shall be tested.

When post-installed anchors are used for other structural applications, all such anchors shall be ~~tension~~ tested.

When post-installed anchors are used for nonstructural applications such as equipment anchorage, 50 percent or alternate bolts in a group, including at least one-half the anchors in each group, shall be tested.

The testing of the post-installed anchors shall be done in the presence of the special inspector and a report of the test results shall be submitted to the enforcement agency.

Exceptions:

1. Undercut anchors that allow visual confirmation of full set shall not require testing.
2. Where the factored design tension on anchors is less than 100 lbs. and those anchors are clearly noted on the approved construction documents, only 10 percent of those anchors shall be tested.
3. Where adhesive anchor systems are used to install reinforcing dowel bars in hardened concrete, only 25% of the dowels shall be tested if all of the following conditions are met:
   a. The dowels are used exclusively to transmit shear forces across joints between existing and new concrete.
   b. The number of dowels in any one member equals or exceeds twelve (12).
   c. The dowels are uniformly distributed across seismic force resisting members (such as shear walls, collectors, and diaphragms).

Anchors to be tested shall be selected at random by the special inspector/Inspector Of Record (IOR).

4. *Testing of shear dowels across cold joints in slabs on grade, where the slab is not part of the lateral force-resisting system shall not be required.*

5. *Testing is not required for power actuated fasteners used to attach tracks of interior non-shear wall partitions for shear only, where there are at least three fasteners per segment of track.*

1901.3.4.4 ***~~1909.2.2~~*** ***Test Loads.*** *Required test loads shall be determined by one of the following methods:*

1. *Twice the maximum allowable tension load or one and a quarter (1- 1/4) times the maximum design strength of anchors as provided in approved test report using criteria adopted in this code or determined in accordance with Chapter 17 ~~Appendix D~~ of ACI 318.*

   Tension test load need not exceed 80% of the nominal yield strength of the anchor element (= 0.8 A_{se} f_{ya}).

2. *The manufacturer's recommended installation torque based on approved test report using criteria adopted in this code.*

1901.3.4.5 ***~~1909.2.4~~*** ***Test Acceptance Criteria.*** *Acceptance criteria for post-installed anchors shall be based on approved test report using criteria adopted in this code. Field test shall satisfy following minimum requirements.*

1. *Hydraulic Ram Method:*

Anchors tested with a hydraulic jack or spring loaded devices shall maintain the test load for a minimum of 15 seconds and shall exhibit no discernable movement during the tension test, e.g., as evidenced by loosening of the washer under the nut.

For adhesive anchors, where other than bond is being tested, the testing device shall not restrict the concrete shear cone type failure mechanism from occurring.

2. *Torque Wrench Method:*

Torque controlled post installed ~~A~~ anchors tested with a calibrated torque wrench shall ~~must~~ attain the specified torque within ½ turn of the nut; or one-quarter (1/4) turn of the nut for a 3/8 in. sleeve anchor only.

~~***Exceptions:***~~

~~*a. Wedge or Sleeve type:*~~
~~*One-quarter (1/4) turn of the nut for a 3/8 in. sleeve anchor only.*~~

~~*b. Threaded Type:*~~
~~*One-quarter (1/4) turn of the screw after initial seating of the screw head.*~~

...

~~[redacted] SECTION 1908~~
~~ANCHORAGE TO CONCRETE —~~

~~ALLOWABLE STRESS DESIGN~~

~~**1908.1.1 Power Actuated Fasteners. [OSHPD 2]** Power actuated fasteners qualified in accordance with ICC-ES AC 70 shall be deemed to satisfy the requirements of this section.~~

~~Power actuated fasteners shall be permitted in seismic shear for components exempt from construction documents review by ASCE 7 Section 13.1.4 and for interior non-bearing non-shear wall partitions. Power actuated fastener shall not be used to anchor exterior cladding or curtain wall systems.~~

...

[Relocated to Section 1901.3] ~~SECTION 1909~~ ~~ANCHORAGE TO CONCRETE — STRENGTH DESIGN~~

...

~~**1909.1.1 Mechanical Anchors and Specialty Inserts. [OSHPD 2]** Mechanical anchors qualified in accordance with ICC-ES AC 193 shall be deemed to satisfy the requirements of this section.~~

~~Specialty inserts, including cast-in-place specialty inserts, tested in accordance with ICC-ES AC 193 shall be deemed to satisfy the requirements of this section.~~

~~**1909.1.2 Post-Installed Adhesive Anchors. [OSHPD 2]** Adhesive anchors qualified in accordance with ICC-ES AC 308 shall be deemed to satisfy the requirements of this section.~~

~~**1909.2 Tests for Post-Installed Anchors in Concrete. [OSHPD 2]** When post-installed anchors are used in lieu of cast-in-place bolts, the installation verification test loads, frequency, and acceptance criteria shall be in accordance with this section.~~

~~**1909.2.1 General.** Test loads or torques and acceptance criteria shall be shown on the construction documents.~~

~~If any anchor fails testing, all anchors of the same type shall be tested, which are installed by the same trade, not previously tested until twenty (20) consecutive anchors pass, then resume the initial test frequency.~~

~~**1909.2.2 Test Loads.** Required test loads shall be determined by one of the following methods:~~

~~1. Twice the maximum allowable tension load or one and a quarter (1-1/4) times the maximum design strength of anchors as provided in approved test report using criteria adopted in this code or determined in accordance with Appendix D of ACI 318.~~

~~Tension test load need not exceed 80% of the nominal yield strength of the anchor element (= 0.8 A_{se} f_{ya}).~~

~~2. The manufacturer's recommended installation torque based on approved test report using criteria adopted in this code.~~

~~**1909.2.3 Test Frequency.** When post-installed anchors are used I for sill plate bolting applications, 10 percent of the anchors shall be tested.~~

~~When post-installed anchors are used for other structural applications, all such anchors shall be tension tested.~~

~~When post-installed anchors are used for nonstructural applications such as equipment anchorage, 50 percent or alternate bolts in a group, including at least one-half the anchors in each group, shall be tested.~~

~~The testing of the post-installed anchors shall be done in the presence of the special inspector and a report of the test results shall be submitted to the enforcement agency.~~

~~**Exceptions:**~~

~~1. Undercut anchors that allow visual confirmation of full set shall not require testing.~~

~~2. Where the factored design tension on anchors is less than 100 lbs. and those anchors are clearly noted on the approved construction documents, only 10 percent of those anchors shall be tested.~~

~~3. Where adhesive anchor systems are used to install reinforcing dowel bars in hardened concrete, only 25% of the dowels shall be tested if all of the following conditions are met:~~

~~a. The dowels are used exclusively to transmit shear forces across joints between existing and new concrete.~~
~~b. The number of dowels in any one member equals or exceeds twelve (12).~~
~~c. The dowels are uniformly distributed across seismic force resisting members (such as shear walls, collectors, and diaphragms).~~

~~Anchors to be tested shall be selected at random by the special inspector/Inspector Of Record (IOR).~~

~~4. Testing of shear dowels across cold joints in slabs on grade, where the slab is not part of the lateral force resisting system shall not be required.~~

~~5. Testing is not required for power actuated fasteners used to attach tracks of interior non-shear wall partitions for shear only, where there are at least three fasteners per segment of track.~~

~~**1909.2.4 Test Acceptance Criteria.** Acceptance criteria for post-installed anchors shall be based on approved test report using criteria adopted in this code. Field test shall satisfy following minimum requirements.~~

~~2. Hydraulic Ram Method:~~

~~Anchors tested with a hydraulic jack or spring loaded devices shall maintain the test load for a minimum of 15 seconds and shall exhibit no discernable movement during the tension test, e.g., as evidenced by loosening of the washer under the nut.~~

~~For adhesive anchors, where other than bond is being tested, the testing device shall not restrict the concrete shear cone type failure mechanism from occurring.~~

~~2. Torque Wrench Method:~~

~~Anchors tested with a calibrated torque wrench must attain the specified torque within ½ turn of the nut~~

~~**Exceptions:**~~

~~a. Wedge or Sleeve type:~~
~~One-quarter (1/4) turn of the nut for a 3/8 in. sleeve anchor only.~~

~~b. Threaded Type:~~
~~One-quarter (1/4) turn of the screw after initial seating of the screw head.~~

~~***1909.2.5 Testing Procedure.*** *Test procedure shall be as permitted by approved test report using criteria adopted in this code. Torque controlled post installed anchors shall be permitted to be tested using torque based on approved test report using criteria adopted in this code. All other post-installed anchors shall be tension tested. Manufacturer's recommendation for testing may be approved by the enforcement agency based on approved test report using criteria adopted in this code.*~~

[All existing amendments that are not revised above shall continue without any change]

NOTATION:
Authority: Health and Safety Code Section 129850
Reference: Health and Safety Code Sections 1275 and 129850

CHAPTER 19*A*
CONCRETE

Italics are used for text within Sections 1903A through 1905A of this code to indicate provisions that differ from ACI 318. State of California amendments in these sections are shown in italics and underlined.

...

SECTION 1901*A*
GENERAL

1901*A*.1 Scope. The provisions of this chapter shall govern the materials, quality control, design and construction of concrete used in structures.

1901A.1.1 Application. *The scope of application of Chapter 19A is as follows:*

1. [Reserved for DSA]
2. *Applications listed in Sections 1.10.1, and 1.10.4, regulated by the Office of Statewide Health Planning and Development (OSHPD). These applications include hospitals, skilled nursing facilities, intermediate care facilities, and correctional treatment centers.*

   Exception: [OSHPD 2] *Single-story Type V skilled nursing or intermediate care facilities utilizing wood-frame or light-steel-frame construction as defined in Health and Safety Code Section 129725, which shall comply with Chapter 19 and any applicable amendments therein.*

1901A.1.2 Amendments in this chapter. *OSHPD adopt this chapter and all amendments.*

Exception: *Amendments adopted by only one agency appear in this chapter preceded with the appropriate acronym of the adopting agency, as follows:*

1. [Reserved for DSA]
2. *Office of Statewide Health Planning and Development.*
   [OSHPD 1] *- For applications listed in Section 1.10.1.*
   [OSHPD 4] *- For applications listed in Section 1.10.4.*

...

1901*A*.5 Construction documents. The *construction documents* for structural concrete construction shall include:

1. The specified compressive strength of concrete at the stated ages or stages of construction for which each concrete element is designed.
2. The specified strength or grade of reinforcement.
3. The size and location of structural elements, reinforcement and anchors.
4. Provision for dimensional changes resulting from creep, shrinkage and temperature.

5. The magnitude and location of prestressing forces.
6. Anchorage length of reinforcement and location and length of lap splices.
7. Type and location of mechanical and welded splices of reinforcement.
8. Details and location of contraction or isolation joints specified for plain concrete.
9. Minimum concrete compressive strength at time of posttensioning.
10. Stressing sequence for post-tensioning tendons.
11. For structures assigned to *Seismic Design Category* D, E or F, a statement if slab on grade is designed as a structural diaphragm.
12. *Openings larger than 12 inches (305 mm) in any dimension shall be detailed on the structural drawings.*

...

1901.6 Special inspections and tests. Special inspections and tests of concrete elements of buildings and structures and concreting operations shall be as required by Chapter *17A and Section 1910A.*

...

SECTION 1903A
SPECIFICATIONS FOR TESTS AND MATERIALS

1903A.1 General. Materials used to produce concrete, concrete itself and testing thereof shall comply with the applicable standards listed in ACI 318.

...

1903A.2 Special Inspections. *Where required, special inspections and tests shall be in accordance with Chapter 17A and Section 1910A.~~1913A.~~*

...

1903A.4 Flat wall insulating concrete form (ICF) systems. *Insulating concrete form material used for forming flat concrete walls shall conform to ASTM E 2634.* ***[OSHPD 1 & 4]*** *Not Permitted by OSHPD.*

~~***1903A.4 Reporting Requirements*** *– Modify ACI 318 Section 3.2.1 by adding the following:*~~

~~*Each component (a) through (g), when present, as a percentage of total cementitiious materials shall be reported for each mix design.*~~

1903A.5 ~~***1903A.6***~~ ***Aggregates*** *- Modify ACI 318 Section ~~3.3.2~~ 26.4.1.2.1(a).(1) as follows: ~~by adding the following:~~*

~~*Aggregate size limitations waiver shall be approved by the enforcement agency.*~~

~~*Evidence that the aggregate used is not reactive in the presence of alkalis may be required by the enforcement agency. If new aggregate sources are to be used or if past experience indicates problems with existing aggregate sources, test the aggregate for potential alkali-silica reactivity in accordance with to ASTM C 1260 or C 1293 to determine the potential alkali-silica reactivity of the aggregate. If the results indicate an expansion greater than 0.10 percent at 16 days age with ASTM C 1260, or an expansion greater than 0.04 percent at 12 months age with ASTM C 1293, provide mitigation with one of the cementitious material systems noted below such that an expansion of less than 0.10 percent at 16 days age is obtained with ASTM C 1567:*~~

~~*1. Low alkali portland cement containing not more than 0.6 percent total alkali when calculated as sodium oxide, as determined by the method given in ASTM C 114.*~~

~~*2. Blended hydraulic cement, Type IS or IP, conforming to ASTM C 595, except that Type IS cement shall not contain less than 40 percent slag cement.*~~

~~3. Replacement of not less than 15 percent by weight of the portland cement with a pozzolan conforming to ASTM C 618 for Class N or F materials (Class C is not permitted).~~

~~4. Replacement of not less than 40 percent by weight of the portland cement with slag cement conforming to ASTM C 989.~~

~~5. Replacement of not less than 5 percent nor more than 10 percent by weight of Portland cement with silica fume conforming to ASTM C 1240.~~

~~6. Replacement of portland cement with a ternary blend of portland cement, slag cement and pozzolan such that the resulting blend contains not more than 70 percent portland cement.~~

~~ASTM C 1567 test shall be performed separately on the fine and coarse aggregate with one requiring the higher percentage of supplementary cementitious materials dictating the required replacement.~~

~~ASTM C 1260, ASTM C 1293 and ASTM C 1567 tests must have been performed within the past three years.~~

(1) **Normal weight aggregate:** *Aggregate shall be non-reactive as determined by one of the methods in ASTM C33 Appendix X1: Methods for Evaluating Potential for Deleterious Expansion Due to Alkali Reactivity of an Aggregate. Aggregates deemed to be deleterious or potentially deleterious may be used with the addition of a material that has been shown to prevent harmful expansion in accordance with Appendix X1 of ASTM C 33, when approved by the building official.*

1903A.6 ~~***1903A.5***~~ ~~***Fly Ash***~~ ***[OSHPD 1 & 4] Limits on Cementitious Materials.*** *~~Add~~ Modify ACI 318 Section 26.4.2.2(b) and Table 26.4.2.2(b) ~~3.2.3~~ as follows:*

~~*Fly ash or other pozzolan can be used as a partial substitute for ASTM C 150 portland cement, as follows:*~~

~~*1. Fly ash or other pozzolan shall conform to ASTM C 618 for Class N or Class F materials (Class C is not permitted), and*~~

~~*2. More than 15 percent by weight of fly ash or other pozzolans shall be permitted to be substituted for ASTM C 150 portland cement if the mix design is proportioned per ACI 318 Section 5.3. See Section 1904A for durability requirements.*~~

~~*3. More than 40 percent by weight of ground-granulated blast-furnace slag conforming to ASTM C 989 shall be permitted to be substituted for ASTM C 150 portland cement if the mix design is proportioned per ACI 318 Section 5.3. See Section 1904A for durability requirements.*~~

The maximum percentage of pozzolans, including fly ash and silica fume, and slag cement in concrete assigned to all exposure categories shall be in accordance with Table 26.4.2.2(b) and (1) and (2).

Where pozzolans are used as cementitous materials, duration for minimum specified compressive strength of concrete (f'_c) that exceeds 28-days shall be considered an alternative system.

1903A.7 ~~***1903A.7***~~ ~~***Discontinuous***~~ ***Steel*** ~~***Fibers***~~ ***fiber reinforcement*** *- Not permitted.* ~~*– Modify ACI 318 Section 3.5.1 by adding the following:*~~

~~*Discontinuous steel fibers are not permitted.*~~

1903A.8 ~~***1903A.8***~~ ***Welding of reinforcing bars*** *- Modify ACI 318 Section ~~3.5.2~~ 26.6.4.1(b) by adding the following:*

~~*If mill test reports are not available, chemical analysis shall be made of bars representative of the bars to be welded. Bars with a carbon equivalent (C.E.) above 0.75 shall not be welded. Welding shall not be done on or within two bar diameters of any bent portion of a bar that has been bent cold. Welding of crossing bars shall not be permitted for assembly of reinforcement unless authorized by the structural engineer and approved by the enforcement agency per approved procedures.*~~

Shop fusion welded stirrup/tie cage (or spiral assemblies) consisting of low-alloy steel reinforcing stirrups/ties conforming to ASTM A706 and longitudinal holding wires, conforming to ASTM A1064 shall be permitted. The fusion welds shall be made by machines using electric resistance welds. Tack welding of primary reinforcing bars together or to stirrups/ties is not permitted. Fusion welding of holding wires is not permitted on any portion of a reinforcing bar that is or will be bent in accordance with ACI 318 Section 25.3.

...

SECTION 1904*A*
DURABILITY REQUIREMENTS

...

1904*A*.1 Structural concrete. Structural concrete shall conform to the durability requirements of ACI 318.

~~***Exception:*** *For Group R-2 and R-3 occupancies not morethan three stories above grade plane, the specified compressive strength, f 'c, for concrete in basement walls, foundation walls, exterior walls and other vertical surfaces exposed to the weather shall be not less than 3,000 psi (20.7 MPa).*~~

...

SECTION 1905*A*
MODIFICATIONS TO ACI 318

1905*A*.1 General. The text of ACI 318 shall be modified as indicated in Sections 1905*A*.1.1 through ~~1905.1.21~~ *1905A.1.16*.

~~**1905.1.1 ACI 318, Section 2.3.** Modify existing definitions and add the following definitions to ACI 318, Section 2.3.~~

~~**DESIGN DISPLACEMENT.** Total lateral displacement expected for the design-basis earthquake, *as specified by Section 12.8.6 of ASCE 7.*~~

~~**DETAILED PLAIN CONCRETE STRUCTURAL WALL.** A wall complying with the requirements of Chapter 14, including 14.6.2.~~

~~**ORDINARY PRECAST STRUCTURAL WALL.** A precast wall complying with the requirements of Chapters 1 through 13, 15, 16 and 19 through 26.~~

~~**ORDINARY REINFORCED CONCRETE STRUCTURAL WALL.** A *cast-in-place* wall complying with the requirements of Chapter 14, excluding 14.6.2.~~

~~**ORDINARY STRUCTURAL PLAIN CONCRETE WALL.** A wall complying with the requirements of Chapter 22, *excluding 22.6.7.*~~

~~**SPECIAL STRUCTURAL WALL.** A cast-in-place or precast wall complying with the requirements of 18.2.4 through 18.2.8, 18.10 and 18.11, as applicable, in addition to the requirements for ordinary reinforced concrete structural walls *or ordinary precast structural walls, as applicable. Where ASCE 7 refers to a "special reinforced concrete structural wall," it shall be deemed to mean a "special structural wall."*~~

1905A.1.1 ~~1905A.1.14~~ ACI 318 Section 4.12.2.2 ~~18.2.4.~~ *Modify ACI 318 Section 4.12.2.2 ~~18.2.4~~ by adding the following:*

Where prestressed concrete elements are restrained from movement, an analysis of the stresses in the prestressed elements and loads in the adjoining structural system induced by the above-described effects shall be made in accordance with PCI Design Handbook. ~~, 7TH Edition.~~

1905A.1.2 ~~1905A.1.13~~ ACI 318, Section 4.12.2.3 ~~18.2.3.~~ *Modify ACI 318 Section 4.12.2.3 ~~18.2.3~~ by adding the following:*

For prestressed concrete members with recessed or dapped ends, an analysis of the connections shall be made in accordance with procedures given in PCI Design Handbook. ~~, 7TH Edition.~~

1905A.1.3 ~~1905A.1.6~~ ACI 318, Section *9.6.1.3. ~~10.5.3.~~ Modify ACI 318 Section 9.6.1.3. ~~10.5.3~~ by adding the following:*

This section shall not be used for members that resist seismic loads, except that reinforcement provided for foundation elements for one-story wood-frame or one-story light steel buildings need not be more than one-third greater than that required by analysis for all loading conditions.

1905A.1.4 ~~1905A.1.8~~ ACI 318, Section 11.2.4.1 ~~14.2.6.~~ *Replace ACI 318 Section 11.2.4.1 ~~14.2.6~~ as follows:*

> ***11.2.4.1*** *~~14.2.6~~ - Walls shall be anchored to intersecting elements such as floors or roofs; or to columns, pilasters, buttresses, of intersecting walls; and footings with reinforcement at least equivalent to No. 4 bars at 12 inches (305 mm) on center for each layer of reinforcement.*

1905A.1.5 ~~1905A.1.11~~ ACI 318 Section ~~16~~ 11.7. *Add Section* ***11.7.6*** *~~16.11~~ to ACI 318 as follows:*

> *11.7.6 ~~16.11~~ - Reinforcement. Perimeters of precast walls shall be reinforced continuously with a minimum of one No. 5 bar extending the full height and width of the wall panel. ~~Bars shall be continuous around corners.~~ Where wall panels do not connect to ~~abut~~ columns or other wall panels to develop at least 75 percent of the horizontal wall steel as noted below, vertical perimeter bars shall be retained by hooked wall bars. ~~Edges of openings in precast walls shall be reinforced with a minimum of one No. 5 bar continuous past corners sufficient to develop the bar.~~*
>
> *A continuous tie or bond beam shall be provided at the roof line either as a part of the roof structure or part of the wall panels as described in the next paragraph below. This tie may be designed as the edge member of the roof diaphragm but, in any case, shall not be less than equivalent to two No. 6 bars continuous. A continuous tie equivalent to two No. 5 bars minimum shall also be provided either in the footing or with an enlarged section of the floor slab.*
>
> *Wall panels of shear wall buildings shall be connected to columns or to each other in such a manner as to develop at least 75 percent of the horizontal wall steel. No more than ~~H~~ half of this continuous horizontal reinforcing shall ~~may~~ be concentrated in bond or tie beams at the top and bottom of the walls and at points of intermediate lateral support. If possible, cast in-place joints with reinforcing bars extending from the panels into the joint a sufficient distance to meet the splice requirements of ACI 318 Section 25.5.2 ~~12.15~~ for Class A shall be used. The reinforcing bars or welded tie details shall not be spaced over eight times the wall thickness vertically nor fewer than four used in the wall panel height. Where wall panels are designed for their respective overturning forces, the panel connections need not comply with the requirements of this paragraph.*

~~*Where splicing of reinforcement must be made at points of maximum stress or at closer spacing than permitted by ACI 318 Section 7.6, welding may be used when the entire procedure is suitable for the particular quality of steel used and the ambient conditions. Unless the welds develop 125 percent of the specified yield strength of the steel used, reinforcement in the form of continuous bars or fully anchored dowels shall be added to provide 25 percent excess steel area and the welds shall develop not less than the specified yield strength of the steel.*~~

Exception: *Nonbearing, nonshear panels such as nonstructural architectural cladding panels or column covers are not required to meet the provisions of this Section.*

1905A.1.6 ~~***1905A.1.10 ACI 318, Section 11.9. 14.9.***~~ *Modify ACI 318 by adding Section 11.9* ~~*14.9*~~ *as follows:*

11.9 ~~*14.9*~~ *-* ***Foundation Walls.*** *Horizontal reinforcing of concrete foundation walls for wood-frame or light-steel buildings shall consist of the equivalent of not less than one No. 5 bar located at the top and bottom of the wall. Where such walls exceed 3 feet (914 mm) in height, intermediate horizontal reinforcing shall be provided at spacing not to exceed 2 feet (610 mm) on center. Minimum vertical reinforcing shall consist of No. 3 bars at 24 inches (610 mm) on center.*

Where concrete foundation walls or curbs extend above the floor line and support wood-frame or light-steel exterior, bearing or shear walls, they shall be doweled to the foundation wall below with a minimum of No. 3 bars at 24 inches (610 mm) on center. Where the height of the wall above the floor line exceeds 18 inches (457 mm), the wall above and below the floor line shall meet the requirements of ACI 318 Section 11.6 and 11.7. ~~*14.3.*~~

1905A.1.7 ACI 318, Section 12.7.3. *Add Section 12.7.3.4 to ACI 318 as follows:*

~~***1905A.1.20 ACI 318, Section 21.11.7.*** *Modify ACI 318 Section 21.11.7 by adding Section 21.11.7.7 as follows:*~~

~~*21.11.7.7 — Where boundary members are not required by ACI 318 Section 21.11.7.5, minimum reinforcement parallel to the edges of all diaphragms and the boundaries of all openings shall consist of twice the cross-sectional area of the minimum shear reinforcement required per linear foot of diaphragm.*~~

12.7.3.4 *– At least two No. 5 bars in diaphragms having two layers of reinforcement in both directions and one No. 5 bar in diaphragms having a single layer of reinforcement in both directions shall be provided around openings larger than 12 inches in any dimension in addition to the minimum reinforcement required by Section 12.6.*

1905A.1.8 ~~***1905A.1.21***~~ *(Chapter 19, Section 1905.1.8)* **ACI 318, Section 17.2.3.** Modify ACI 318 Sections 17.2.3.4.2, 17.2.3.4.3(d) and 17.2.3.5.2 to read as follows:

17.2.3.4.2 - Where the tensile component of the strength-level earthquake force applied to anchors exceeds 20 percent of the total factored anchor tensile force associated with the same load combination, anchors and their attachments shall be designed in accordance with 17.2.3.4.3. The anchor design tensile strength shall be determined in accordance with 17.2.3.4.4.

Exception: *Anchors designed to resist wall out-of-plane forces with design strengths equal to or greater than the force determined in accordance with ASCE 7 Equation 12.11-1 or 12.14-10 and Section 1604A.8.2 of this code shall be deemed to satisfy Section 17.2.3.4.3(d).*

17.2.3.4.3(d) - The anchor or group of anchors shall be designed for the maximum tension obtained from design load combinations that include **E**, with **E** increased by Ω_0. The anchor design tensile strength shall *be calculated from* 17.2.3.4.4.

17.2.3.5.2 – Where the shear component of the strength-level earthquake force applied to anchors exceeds 20 percent of the total factored anchor shear force associated with the same load combination, anchors and their attachments shall be designed in accordance with 17.2.3.5.3. The anchor design shear strength for resisting earthquake forces shall be determined in accordance with 17.5.

Exceptions:

1. For the calculation of the in-plane shear strength of anchor bolts attaching wood sill plates of bearing or non-bearing walls of light-frame wood structures to foundations or foundation stem walls, the in-plane design shear strength in accordance with 17.5.2 and 17.5.3 need not be computed and 17.2.3.5.3 shall be deemed to be satisfied provided all of the following are met:

1.1. The allowable in-plane shear strength of the anchor is determined in accordance with AWC NDS Table 11E for lateral design values parallel to grain.

1.2. The maximum anchor nominal diameter is $^5/_8$ inches (16 mm).

1.3. Anchor bolts are embedded into concrete a minimum of 7 inches (178 mm).

1.4. Anchor bolts are located a minimum of $1^3/_4$ inches (45 mm) from the edge of the concrete parallel to the length of the wood sill plate.

1.5. Anchor bolts are located a minimum of 15 anchor diameters from the edge of the concrete perpendicular to the length of the wood sill plate.

1.6. The sill plate is 2-inch or 3-inch nominal thickness.

2. For the calculation of the in-plane shear strength of anchor bolts attaching cold-formed steel track of bearing or non-bearing walls of anchor bolts attaching cold-formed steel track of bearing or non-bearing walls of light-frame construction to foundations or foundation stem walls the in-plane design shear strength in accordance with 17.5.2 and 17.5.3 need not be computed and 17.2.3.5.3 shall be deemed to be satisfied provided all of the following are met:

2.1. The maximum anchor nominal diameter is $^5/_8$ inches (16 mm).

2.2. Anchors are embedded into concrete a minimum of 7 inches (178 mm).

2.3. Anchors are located a minimum of $1^3/_4$ inches (45 mm) from the edge of the concrete parallel to the length of the track.

2.4. Anchors are located a minimum of 15 anchor diameters from the edge of the concrete perpendicular to the length of the track.

2.5. The track is 33 to 68 mil designation thickness.

Allowable in-plane shear strength of exempt anchors, parallel to the edge of concrete shall be permitted to be determined in accordance with AISI S100 Section E3.3.1.

3. In light-frame construction, bearing or nonbearing walls, shear strength of concrete anchors less than or equal to ~~5/8~~ 1" inch [16mm] in diameter attaching sill plate or track to foundation

or foundation stem wall need not satisfy 17.2.3.5.3(a) through (c) when the design strength of the anchors is determined in accordance with 17.5.2.1(c).

1905A.1.9 ~~1905A.1.1~~ ACI 318, Table 19.2.1.1 ~~Section 5.1.1.~~ *Modify ACI 318 Table 19.2.1.1 ~~Section 5.1.1~~ as follows.*
For concrete designed and constructed in accordance with this chapter, f'_c shall not be less than 3,000 psi (20.7 MPa). Reinforced normal weight concrete with specified compressive strength higher than 8,000 psi (55 MPa) shall require prior approval of structural design method and acceptance criteria by the enforcement agency.

~~1905A.1.3 ACI 318, Section 8.13.5.~~ *~~Replace ACI 318 Section 8.13.5 as follows:~~*

~~8.13.5 - Permanent burned clay or concrete tile fillers shall be considered only as forms and shall not be included in the calculations involving shear or bending moments.~~

~~The thickness of the concrete slab on the permanent fillers shall be designed as described in ACI 318 Section 8.13.6 as modified in Section 1905A.1.4.~~

~~1905A.1.4 ACI 318, Section 8.13.6.~~ *~~Replace ACI 318 Section 8.13.6 as follows:~~*

~~8.13.6 - Where removable forms or fillers are used, the thickness of the concrete slab shall not be less than 1/12 of the clear distance between joists and in no case less than 2 1/2 inches (64 mm). Such slab shall be reinforced at right angles to the joists with at least the amount of reinforcement required for flexure, considering load concentrations, if any, but in no case shall the reinforcement be less than that required by ACI 318 Section 7.12.~~

~~1905A.1.5 ACI 318, Section 8.13.~~ *~~Add Section 8.13.9 to ACI 318 as follows:~~*

~~8.13.9 Concrete bridging. Concrete bridging shall be provided as follows: one near the center of spans for 20 to 30 feet (6096 mm to 9144 mm) spans and two near the third points of spans over 30 feet (9144 mm). Such bridging shall be either:~~

~~(a) A continuous concrete web having a depth equal to the joist and a width not less than 3 1/2 inches (89 mm) reinforced with a minimum of one No. 4 bar in the top and bottom; or~~

~~(b) Any other concrete element capable of transferring a concentrated load of 1,000 pounds (4.5 kN) from any joist to the two adjacent joists.~~

~~Such bridging shall not be required in roof framing if an individual member is capable of carrying dead load plus a concentrated load of 1,500 pounds (6.7 kN) at any point.~~

~~1905A.1.7 ACI 318, Section 12.14.3.~~ *~~Add Section 12.14.3.6 to ACI 318 as follows:~~*

~~12.14.3.6 - Welded splices and mechanical connections shall maintain the clearance and coverage requirements of ACI Sections 7.6 and 7.7.~~

~~1905A.1.9 ACI 318, Section 14.5 - Empirical design method.~~ *~~Not permitted by OSHPD.~~*

~~1905A.1.12 ACI 318, Section 17.5.1.~~ *~~Modify ACI 318 Section 17.5.1 by adding Sections 17.5.1.1 and 17.5.1.2 as follows:~~*

~~17.5.1.1 - Full transfer of horizontal shear forces may be assumed when all of the following are satisfied:~~

~~1. Contact surfaces are clean, free of laitance, and intentionally roughened to full amplitude of approximately 1/4 inch (6.4 mm).~~

~~*2. Minimum ties are provided in accordance with ACI 318 Section 17.6,*~~

~~*3. Web members are designed to resist total vertical shear, and*~~

~~*4. All shear reinforcement is fully anchored into all interconnected elements.*~~

~~*17.5.1.2 – If any of the requirements of ACI 318 Section 17.5.1.1 is not satisfied, horizontal shear shall be investigated in accordance with ACI 318 Section 17.5.3 or 17.5.4.*~~

~~**1905.1.2 ACI 318, Section 18.2.1.** Modify ACI 318 Sections 18.2.1.2 and 18.2.1.6 to read as follows:~~

~~*18.2.1.2 – Structures assigned to Seismic Design Category A* shall satisfy requirements of Chapters 1 through 17 and 19 through 26; Chapter 18 does not apply. Structures assigned to *Seismic Design Category* B, C, D, E or F also shall satisfy 18.2.1.3 through 18.2.1.7, as applicable. *Except for structural elements of plain concrete complying with Section 1905.1.7 of the International Building Code, structural elements of plain concrete are prohibited in structures assigned to Seismic Design Category C, D, E or F.*~~

~~18.2.1.6 – Structural systems designated as part of the seismic force-resisting system shall be restricted to those *permitted by ASCE 7*. Except for *Seismic Design Category* A, for which Chapter 18 does not apply, the following provisions shall be satisfied for each structural system designated as part of the seismic force-resisting system, regardless of the *Seismic Design Category*.~~

~~(a) Ordinary moment frames shall satisfy 18.3.~~
~~(b) Ordinary reinforced concrete structural walls *and ordinary precast structural walls* need not satisfy any provisions in Chapter 18.~~
~~(c) Intermediate moment frames shall satisfy 18.4.~~
~~(d) Intermediate precast *structural* walls shall satisfy 18.5.~~
~~(e) Special moment frames shall satisfy 18.6 through 18.9.~~
~~(f) Special structural walls shall satisfy 18.10.~~
~~((g) Special structural walls constructed using precast concrete shall satisfy 18.11.~~

~~All special moment frames and special structural walls shall also satisfy 18.2.4 through 18.2.8.~~

~~***1905A.1.18 ACI 318, Section 21.9.4.*** *Modify ACI 318 by adding Section 21.9.4.6 as follows:~~

~~*21.9.4.6 – Walls and portions of walls with $P_u > 0.35P_o$ shall not be considered to contribute to the calculated strength of the structure for resisting earthquake-induced forces. Such walls shall conform to the requirements of ACI 318 Section 21.13.*~~

1905A.1.10 *(Chapter 19, Section 1905.1.3)* ~~(Reserved for DSA) **1905.1.3 ACI 318, Section 18.5.** Modify ACI 318, Section 18.5, by adding new Section 18.5.2.2 and renumbering existing Sections 18.5.2.2 and 18.5.2.3 to become 18.5.2.3 and 18.5.2.4, respectively:~~

~~*18.5.2.2 – Connections that are designed to yield shall be capable of maintaining 80 percent of their design strength at deformation induced by the design displacement or shall use type 2 mechanical splices.*~~

~~18.5.2.3 – Elements of the connection that are not designed to yield shall develop at least 1.5 S_y.~~

~~18.5.2.4 – In structures assigned to SDC D, E or F, Wall piers shall be designed in accordance with 18.10.8 or 18.14 in ACI 318.~~

1905A.1.11 ~~***1905A.1.17***~~ ***ACI 318, Section 18.10.6.5*** ~~***21.9.2.2.***~~ *Modify ACI 318, Section 18.10.6.5* ~~*21.9.2.2*~~ *by adding the following:*

(c) Where boundary members are not required by ACI 318 Section18.10.6.2 or 18.10.6.3, ~~*21.9.6,*~~ *minimum reinforcement parallel to the edges of all structural walls and the boundaries of all openings shall consist of twice the cross-sectional area of the minimum shear reinforcement required per lineal foot of wall. Horizontal extent of boundary element shall be* ~~*per*~~ *in accordance with ACI 318 Section 18.10.6.4 (a), (b) and (c).* ~~*21.9.6.4 (a) & (b).*~~

~~**1908.1.4 ACI 318, Section 18.11.** Modify ACI 318, Section 18.11.2.1, to read as follows:~~

~~18.11.2.1 – Special structural walls constructed using precast concrete shall satisfy all the requirements of 18.10 for cast-in-place special structural walls in addition to Section 18.5.2.~~

1905A.1.12 ~~***1905A.1.19***~~ ***ACI 318, Section 18.12.6*** ~~***21.11.4.***~~ *Add Section 18.12.6.2 to ACI 318 as follows:* ~~*Modify ACI 318 Section 21.11.4 by adding the following:*~~

18.12.6.2 *Collector and boundary elements in topping slabs placed over precast floor and roof elements shall not be less than 3 inches (76 mm) or 6 d_b thick, where d_b is the diameter of the largest reinforcement in the topping slab.*

1905A.1.13 *(Chapter 19, Section 1905.1.5)* ~~**1905.1.5**~~ **ACI 318, Section 18.13.1.1.** Modify ACI 318, Section 18.13.1.1, to read as follows:

18.13.1.1 – Foundations resisting earthquake-induced forces or transferring earthquake-induced forces between a structure and ground shall comply with the requirements of Section 18.13 and other applicable provisions of ACI 318 *unless modified by Chapter 18A of the California Building Code.*

~~**1905.1.6 ACI 318, Section 14.6.** Modify ACI 318, Section 14.6, by adding new Section 14.6.2 to read as follows:~~

~~*14.6.2.1 – Detailed plain concrete structural walls.*~~
~~*14.6.2.1 – Detailed plain concrete structural walls are walls conforming to the requirements of ordinary structural plain concrete walls and 14.6.2.2.*~~
~~*14.6.2.2 – Reinforcement shall be provided as follows:*~~
~~*(a) Vertical reinforcement of at least 0.20 square inch (129 mm2) in cross-sectional area shall be provided continuously from support to support at each corner, at each side of each opening and at the ends of walls. The continuous vertical bar required beside an opening is permitted to substitute for one of the two No. 5 bars required by 14.6.1.*~~
~~*(b) Horizontal reinforcement at least 0.20 square inch (129 mm2) in cross-sectional area shall be provided:*~~

~~*1. Continuously at structurally connected roof and floor levels and at the top of walls;*~~
~~*2. At the bottom of load-bearing walls or in the top of foundations where doweled to the wall; and*~~
~~*3. At a maximum spacing of 120 inches (3048 mm).*~~

~~*Reinforcement at the top and bottom of openings, where used in determining the maximum spacing specified in Item 3 above, shall be continuous in the wall.*~~

~~**1905.1.7 ACI 318, Section 14.1.4.** Delete ACI 318, Section 14.1.4, and replace with the following:~~
~~*14.1.4 – Plain concrete in structures assigned to Seismic Design Category C, D, E or F.*~~
~~*14.1.4.1 – Structures assigned to Seismic Design Category C, D, E or F shall not have elements of structural plain concrete, except as follows:*~~
~~*(a) Structural plain concrete basement, foundation or other walls below the base are permitted in detached one- and two-family dwellings three stories or less in height constructed with stud-*~~

~~bearing walls. In dwellings assigned to Seismic Design Category D or E, the height of the wall shall not exceed 8 feet (2438 mm), the thickness shall not be less than 71/2 inches (190 mm), and the wall shall retain no more than 4 feet (1219 mm) of unbalanced fill. Walls shall have reinforcement in accordance with 14.6.1.~~

~~(b) Isolated footings of plain concrete supporting pedestals or columns are permitted, provided the projection of the footing beyond the face of the supported member does not exceed the footing thickness.~~

~~**Exception:** In detached one- and two-family dwellings three stories or less in height, the projection of the footing beyond the face of the supported member is permitted to exceed the footing thickness.~~

~~(c) Plain concrete footings supporting walls are permitted, provided the footings have at least two continuous longitudinal reinforcing bars. Bars shall not be smaller than No. 4 and shall have a total area of not less than 0.002 times the gross cross-sectional area of the footing. For footings that exceed 8 inches (203 mm) in thickness, a minimum of one bar shall be provided at the top and bottom of the footing. Continuity of reinforcement shall be provided at corners and intersections.~~

~~**Exceptions:**~~

~~1. In Seismic Design Category A, B, and C, detached one- and two-family dwellings three stories or less in height and constructed with stud-bearing walls, plain concrete footings without longitudinal reinforcement supporting walls are permitted.~~

~~2. For foundation systems consisting of a plain concrete footing and a plain concrete stemwall, a minimum of one bar shall be provided at the top of the stemwall and at the bottom of the footing.~~

~~3. Where a slab on ground is cast monolithically with the footing, one No. 5 bar is permitted to be located at either the top of the slab or bottom of the footing.~~

1905A.1.14 ACI 318, Table 21.2.2. *Replace Table 21.2.2 as follows:*

Table 21.2.2 – Strength reduction factor φ for moment, axial force, or combined moment and axial force

Net tensile strain ε_t	Classification	φ			
		Type of transverse reinforcement			
		Spirals conforming to 25.7.3		Other	
$\varepsilon_t \le \varepsilon_{ty}$	Compression-controlled	0.75	(a)	0.65	(b)
$\varepsilon_{ty} < \varepsilon_t < 0.005$	Transition[1][2]	$0.75 + 0.15\frac{\varepsilon_t - \varepsilon_{ty}}{\varepsilon_t^* - \varepsilon_{ty}}$	(c)	$0.65 + 0.25\frac{\varepsilon_t - \varepsilon_{ty}}{\varepsilon_t^* - \varepsilon_{ty}}$	(d)
$\varepsilon_t \ge 0.005$	Tension-controlled[3]	0.9	(e)	0.9	(f)

[1] For sections classified as Transition, it shall be permitted to use φ corresponding to compression-controlled sections.

[2] *ε_t^* is the greater of net tensile strain calculated for $P_n = 0.1A_g f'_c$ and 0.005.*

[3] For sections with *factored axial compression force $P_u \ge 0.1A_g f'_c$*, φ shall be calculated using equation (c) or (d) for sections classified as Transition, as applicable.

1905A.1.15 ~~1905A.1.15~~ ACI 318, Section 24.2.1 ~~18.2.~~ *Add Section 24.2.1.1 ~~18.2.7~~ to ACI 318 as follows:*

24.2.1.1 *- Span to Depth Ratio. Prestressed Beam and Slab Span to Depth ratios for continuous prestressed concrete members shall not exceed the following, except when calculations of deflections and vibration effects prove that greater values may be used without adverse effects:*

Beams *30*
One-way Slabs *40*
Two-way Floor Slabs *40*
Two-way Roof Slabs *44*

These ratios should be decreased for special conditions such as heavy loads and simple spans.

Maximum deflection criteria shall be in accordance with ACI 318 Section 24.2.2. ~~9.5.~~

1905A.1.16 ~~1905A.1.2~~ ACI 318, Section ~~5.6.2.1~~ 26.12.2.1(a). *~~Replace ACI 318 Section 5.6.2.1~~ 26.12.2.1(a) by the following.*
26.12.2.1(a) ~~5.6.2.1~~ Samples for strength tests of each class of concrete placed each day shall be taken not less than once a day, or not less than once for each 50 cubic yards (345m^3) of concrete, or not less than once for each 2,000 square feet (186 m^2) of surface area for slabs or walls. Additional samples for seven-day compressive strength tests shall be taken for each class of concrete at the beginning of the concrete work or whenever the mix or aggregate is changed.

SECTION 1906*A*
STRUCTURAL PLAIN CONCRETE

Not permitted by OSHPD.

~~**1906.1 Scope.** The design and construction of structural plain concrete, both cast-in-place and precast, shall comply with the minimum requirements of ACI 318, as modified in Section 1905.~~
~~**Exception:** For Group R-3 occupancies and buildings of other occupancies less than two stories above grade plane of light frame construction, the required footing thickness of ACI 318 is permitted to be reduced to 6 inches (152 mm), provided that the footing does not extend more than 4 inches (102 mm) on either side of the supported wall.~~

...

SECTION 1908*A*
SHOTCRETE

1908*A*.1 General. Shotcrete is mortar or concrete that is pneumatically projected at high velocity onto a surface. Except as specified in this section, shotcrete shall conform to the requirements of this chapter for ~~plain or~~ reinforced concrete *and the provisions of ACI 506. The specified compressive strength of shotcrete shall not be less than 3,000 psi (20.69 MPa).*

Concrete or masonry to receive shotcrete shall have the entire surface thoroughly cleaned and roughened by sand blasting, and just prior to receiving shotcrete, shall be thoroughly cleaned of all debris, dirt and dust. Concrete and masonry shall be wetted before shotcrete is deposited, but not so wet as to overcome suction. Sand for sand blasting shall be clean, sharp and uniform in size, with no particles that will pass a 50-mesh screen.

...

1908*A*.3 Aggregate. Coarse aggregate, if used, shall not exceed $^3/_4$ inch (19.1 mm).

For shear walls, when total rebar in any direction is more than 0.31 in^2 / ft. or rebar size is larger than # 5, shotcrete shall conform to course aggregate grading No. 2 per Table 1.1 of ACI 506.

...

1908*A*.5 Preconstruction tests. ~~Where preconstruction test are required by Section 1908.4, a~~ *A* test panel shall be shot, cured, cored or sawn, examined and tested prior to commencement of the project. The sample panel shall be representative of the project and simulate job conditions as closely as

possible. The panel thickness and reinforcing shall reproduce the thickest and most congested area specified in the structural design. It shall be shot at the same angle, using the same nozzleman and with the same concrete mix design that will be used on the project. The equipment used in preconstruction testing shall be the same equipment used in the work requiring such testing, unless substitute equipment is *approved* by the *building official*. Reports of preconstruction tests shall be submitted to the *building official* as specified in Section 1704A.5.

...

1908*A*.7 Joints. Except where permitted herein, unfinished work shall not be allowed to stand for more than 30 minutes unless edges are sloped to a thin edge. For structural elements that will be under compression and for construction joints shown on the approved construction documents, square joints are permitted. Before placing additional material adjacent to previously applied work, sloping and square edges shall be cleaned and wetted.
The film of laitance which forms on the surface of the shotcrete shall be removed within approximately two hours after application by brushing with a stiff broom. If this film is not removed within two hours, it shall be removed by thorough wire brushing or sand blasting. Construction joints over eight hours old shall be thoroughly cleaned with air and water prior to receiving shotcrete.

...

1908*A*.10 Strength tests. Strength tests for shotcrete shall be made *in accordance with ASTM C1604* ~~*standards*~~ by an approved agency on specimens that are representative of the work and which have been water soaked for at least 24 hours prior to testing. When the maximum-size aggregate is larger than $^3/_8$ inch (9.5 mm), specimens shall consist of not less than three 3-inch-diameter (76 mm) cores or 3-inch (76 mm) cubes. When the maximum-size aggregate is $^3/_8$ inch (9.5 mm) or smaller, specimens shall consist of not less than 2-inch-diameter (51 mm) cores or 2-inch (51 mm) cubes.

1908*A*.10.1 Sampling. Specimens shall be taken from the in-place work or from test panels, and shall be taken at least once each shift, but not less than one for each 50 cubic yards (38.2 m^3) of shotcrete.

1908*A*.10.2 Panel criteria. When the maximum-size aggregate is larger than $^3/_8$ inch (9.5 mm), the test panels shall have minimum dimensions of 18 inches by 18 inches (457 mm by 457 mm). When the maximum-size aggregate is $^3/_8$ inch (9.5 mm) or smaller, the test panels shall have minimum dimensions of 12 inches by 12 inches (305 mm by 305 mm). Panels shall be shot in the same position as the work, during the course of the work and by the nozzlemen doing the work. The conditions under which the panels are cured shall be the same as the work. *Approval from the enforcement agency shall be obtained prior to performing the test panel method.*

...

1908A.11 ~~***1910A.11***~~ ***Forms and Ground Wires for Shotcrete.*** *Forms for shotcrete shall be substantial and rigid. Forms shall be built and placed so as to permit the escape of air and rebound.*

Adequate ground wires, which are to be used as screeds, shall be placed to establish the thickness, surface planes and form of the shotcrete work. All surfaces shall be rodded to these wires.

1908A.12 ~~***1910A.12***~~ ***Placing.*** *Shotcrete shall be placed in accordance with ACI 506.*

~~(Relocated to Section 2514)~~ ~~**SECTION 1911A**~~
~~**REINFORCED GYPSUM CONCRETE**~~

~~**1911*A*.1 General.** Reinforced gypsum concrete shall comply with the requirements of ASTM C 317 and ASTM C 956. *Reinforced gypsum concrete shall be considered as an alternative system.*~~

...

(Amendments in the CBC 2013 Sections 1909A and 1910A are deleted except those relocated as noted below, since model code deleted those sections)

~~[Relocated to Section 1616A.1.20]~~ ~~***1908A.1.1 Power actuated fasteners.*** *Power actuated fasteners qualified in accordance with ICC-ES AC 70 shall be deemed to satisfy the requirements of this section.*~~

~~*Power actuated fasteners shall be permitted in seismic shear for components exempt from permit requirements by Section 1616A.1.18 of this code and for interior nonbearing non-shear wall partitions. Power actuated fastener shall not be used to anchor exterior cladding or curtain wall systems.*~~

...

~~[Relocated to Section 1616A.1.19]~~ ~~***1909A.1.1 Specialty inserts.*** *Specialty inserts, including cast-in-place specialty inserts, tested in accordance with ICC-ES AC 193 shall be deemed to satisfy the requirements of this section.*~~

...

SECTION 1909A
RESERVED

SECTION 1910A ~~1913A~~
CONCRETE, REINFORCEMENT AND ANCHOR TESTING

1910A.1 ~~***1913A.1***~~ ***Cementitious material.*** *The concrete supplier shall furnish to the enforcement agency certification that the cement proposed for use on the project has been manufactured and tested in compliance with the requirements of ASTM C 150 for portland cement and ASTM C 595 or ASTM C 1157 for blended hydraulic cement, whichever is applicable. When a mineral admixture or ground granulated blast-furnace slag is proposed for use, the concrete supplier shall furnish to the enforcement agency certification that they have been manufactured and tested in compliance with ASTM C 618 or ASTM C 989, whichever is applicable. The concrete producer shall provide copies of the cementitious material supplier's Certificate of Compliance that represents the materials used by date of shipment for concrete. Cementitious materials without Certification of Compliance shall not be used.*

1910A.2 ~~***1913A.2***~~ ***Tests of reinforcing bars.*** ~~*Where following s*~~ *Samples* ~~*are*~~ *shall be taken from bundles as delivered from the mill, with the bundles identified as to heat number and* ~~*provided*~~ *the accompanying mill certificate.* ~~*analyses accompany the report, o*~~ *One tensile test and one bend test shall be made from a sample* ~~*specimen*~~ *from each 10 tons (9080 kg) or fraction thereof of each size of reinforcing steel.*

Where positive identification of the heat number cannot be made or where random samples are to be taken, one series of tests shall be made from each 2 1/2 tons (2270 kg) or fraction thereof of each size of reinforcing steel.

Tests of reinforcing bars may be waived by the structural engineer with the approval of the Building Official for one-story buildings or non-building structures provided they are identified in the construction documents and certified mill test reports are provided to the inspector of record for each shipment of such reinforcement.

1910A.3 ~~***1913A.3***~~ ***Tests for prestressing steel and anchorage.*** *All wires or bars of each size from each mill heat and all strands from each manufactured reel to be shipped to the site shall be assigned an individual lot number and shall be tagged in such a manner that each lot can be accurately identified at the jobsite. Each lot of tendon and anchorage assemblies and bar couplers to be installed shall be likewise identified.*

The following samples of materials and tendons selected by the engineer or the designated testing laboratory from the prestressing steel at the plant or jobsite shall be furnished by the contractor and tested by an approved independent testing agency:

1. *For wire, strand or bars, 7-foot-long (2134 mm) samples shall be taken of the coil of wire or strand reel or rods. A minimum of one random sample per 5,000 pounds (2270 kg) of each heat or lot used on the job shall be selected.*

2. *For prefabricated prestressing tendons other than bars, one completely fabricated tendon 10 feet (3048 mm) in length between grips with anchorage assembly at one end shall be furnished for each size and type of tendon and anchorage assembly.*

   Variations of the bearing plate size need not be considered.

   The anchorages of unbonded tendons shall develop at least 95 percent of the minimum specified ultimate strength of the pre-stressing steel. The total elongation of the tendon under ultimate load shall not be less than 2 percent measured in a minimum gage length of 10 feet (3048 mm).

   Anchorages of bonded tendons shall develop at least 90 percent of the minimum specified strength of the prestressing steel tested in an unbonded state. All couplings shall develop at least 95 percent of the minimum specified strength of the prestressing steel and shall not reduce the elongation at rupture below the requirements of the tendon itself.

3. *If the prestressing tendon is a bar, one 7-foot (2134 mm) length complete with one end anchorage shall be furnished and, in addition, if couplers are to be used with the bar, two 4-foot (1219 mm) lengths of bar fabricated to fit and equipped with one coupler shall be furnished.*

4. *Mill tests of materials used for end anchorages shall be furnished. In addition, at least one Brinnell hardness test shall be made of each thickness of bearing plate.*

1910A.4 ~~***1913A.4***~~ **Composite construction cores.** *Cores of the completed composite concrete construction shall be taken to demonstrate the shear strength along the contact surfaces. The cores shall be tested when the cast-in-place concrete is approximately 28 days old and shall be tested by a shear loading parallel to the joint between the precast concrete and the cast-in-place concrete. The minimum unit shear strength of the contact surface area of the core shall not be less than 100 psi (689 kPa).*

At least one core shall be taken from each building for each 5,000 square feet (465m2) of area of composite concrete construction and not less than three cores shall be taken from each project. The architect or structural engineer in responsible charge of the project or his or her representative shall designate the location for sampling.

~~***1913A.5 Tests of shotcrete.*** *Testing of shotcrete shall follow the provisions of Section 1910A and the general requirements of ACI 318 Section 5.6.*~~

~~***1913A.6 Gypsum field tests.*** *Field tests shall be made during construction to verify gypsum strength. One sample consisting of three specimens shall be made for each 5,000 square feet (465 m²) or fraction thereof of all gypsum poured, but not less than one sample shall be taken from each half day's pour.*~~

1910A.5 ~~***1913A.7***~~ **Tests for Post-Installed Anchors in Concrete.** *When post-installed anchors are used in lieu of cast-in place bolts, the installation verification test loads, frequency, and acceptance criteria shall be in accordance with this section.*

1910A.5.1 ~~***1913A.7.1***~~ **General.** *Test loads or torques and acceptance criteria shall be shown on the construction documents.*

If any anchor fails testing, all anchors of the same type shall be tested, which are installed by the same trade, not previously tested until twenty (20) consecutive anchors pass, then resume the initial test frequency.

1910A.5.2 ~~1913A.7.5~~ Testing Procedure. *The test procedure shall be as permitted by an approved ~~test~~ evaluation report using criteria adopted in this code. All ~~other~~ post-installed anchors shall be tension tested.*

> ***Exception: [OSHPD 1 & 4]*** *Torque controlled post installed anchors shall be permitted to be tested using torque based on an approved test report using criteria adopted in this code.*

Alternatively, ~~M~~ manufacturer's recommendation for testing may be approved by the enforcement agency based on an approved test report using criteria adopted in this code.

1910A.5.3 ~~1913A.7.3~~ Test Frequency. *When post-installed anchors are used for sill plate bolting applications, 10 percent of the anchors shall be tested.*

When post-installed anchors are used for other structural applications, all such anchors shall be tested.

When post-installed anchors are used for nonstructural applications such as equipment anchorage, 50 percent or alternate bolts in a group, including at least one-half the anchors in each group, shall be tested.

The testing of the post-installed anchors shall be done in the presence of the special inspector and a report of the test results shall be submitted to the enforcement agency.

Exceptions:

1. *Undercut anchors that allow visual confirmation of full set shall not require testing.*

2. *Where the factored design tension on anchors is less than 100 lbs. and those anchors are clearly noted on the approved construction documents, only 10 percent of those anchors shall be tested.*

3. *Where adhesive anchor systems are used to install reinforcing dowel bars in hardened concrete, only 25% of the dowels shall be tested if all of the following conditions are met:*

   a. *The dowels are used exclusively to transmit shear forces across joints between existing and new concrete.*
   b. *The number of dowels in any one member equals or exceeds 12.*
   c. *The dowels are uniformly distributed across seismic force resisting members (such as shear walls, collectors and diaphragms).*

   Anchors to be tested shall be selected at random by the special inspector/Inspector Of Record (IOR).

4. *Testing of shear dowels across cold joints in slabs on grade, where the slab is not part of the lateral force-resisting system shall not be required.*

5. *Testing is not required for power actuated fasteners used to attach tracks of interior non-shear wall partitions for shear only, where there are at least three fasteners per segment of track.*

1910A.5.4 ~~1913A.7.2~~ Test Loads. *Required test loads shall be determined by one of the following methods:*

1. *Twice the maximum allowable tension load or one and a quarter (1- 1/4) times the maximum design strength of anchors as provided in an approved test report using criteria adopted in this code or determined in accordance with Chapter 17 ~~Appendix D~~ of ACI 318.*

Tension test load need not exceed 80% of the nominal yield strength of the anchor element (= 0.8 A_{se} f_{ya}).

2. *The manufacturer's recommended installation torque based on an approved test report using criteria adopted in this code.*

1910A.5.5 ~~1913A.7.4~~ Test Acceptance Criteria. *Acceptance criteria for post-installed anchors shall be based on an approved test report using criteria adopted in this code. Field tests shall satisfy the following minimum requirements.*

1. *Hydraulic Ram Method:*

Anchors tested with a hydraulic jack or spring loaded ~~devices~~ apparatus shall maintain the test load for a minimum of 15 seconds and shall exhibit no discernable movement during the tension test, e.g., as evidenced by loosening of the washer under the nut.

For adhesive anchors, where other than bond is being tested, the testing apparatus support ~~device~~ shall not be located within 1.5 times the anchor's embedment depth to avoid restricting the concrete shear cone type failure mechanism from occurring.

2. *Torque Wrench Method:*

Torque controlled post installed ~~A~~ anchors tested with a calibrated torque wrench shall ~~must~~ attain the specified torque within ½ turn of the nut; or one-quarter (1/4) turn of the nut for a 3/8 in. sleeve anchor only.

~~*Exceptions:*~~
~~*a. Wedge or Sleeve type:*~~
~~*One-quarter (1/4) turn of the nut for a 3/8 in. sleeve anchor only.*~~
~~*b. Threaded Type:*~~
~~*One-quarter (1/4) turn of the screw after initial seating of the screw head.*~~

SECTION 1911A ~~1914A~~
EXISTING CONCRETE STRUCTURES

1911A.1 ~~1914A.1~~ Existing Concrete Structures.

The structural use of existing concrete with a core strength less than 1,500 psi (10.3MPa) is not permitted in rehabilitation work.

For existing concrete structures, sufficient cores shall be taken at representative locations throughout the structure, as designated by the architect or structural engineer, so that knowledge will be had of the in-place strength of the concrete. At least three cores shall be taken from each building for each 4,000 square feet (372 m2) of floor area, or fraction thereof. Cores shall be at least 4 inches (102 mm) in diameter. Cores as small as 2.75 inches (70 mm) in diameter may be allowed by the enforcement agency when reinforcement is closely spaced and the coarse aggregate does not exceed 3/4 inch (19 mm).

1911A.2 ~~1914A.2~~ Crack Repair by Epoxy Injection. *Crack Repair of concrete and masonry member by epoxy injection shall conform to all requirements of ACI 503.7.*

1911A.3 ***~~1914A.3~~*** ***Concrete Strengthening by Externally Bonded Fiber Reinforced Polymer (FRP).*** *Design and construction of externally bonded FRP systems for strengthening concrete structures shall be in accordance with ACI 440.2R.*

Exceptions: *1) Near-Surface Mounted (NSM) FRP bars shall not be permitted.*
2) Strengthening of shear walls and diaphragms (including chords and collectors) shall be considered as an alternative system.

Design capacities, reliability, serviceability of FRP materials shall be permitted to be established in accordance with ICC-ES AC 125. Minimum inspection requirements of FRP composite systems shall be in accordance with ICC-ES AC 178.

(All existing amendments that are not revised above shall continue without any change)

NOTATION:
Authority: Health and Safety Code Section 130005(g) & 130021
Reference: Health and Safety Code Section 1275, 129790, 129850 & 130005(g)

CHAPTER 20
ALUMINUM

SECTION 2001
GENERAL

2001.1 Scope. This chapter shall govern the quality, design, fabrication and erection of aluminum.

SECTION 2002
MATERIALS

2002.1 General. Aluminum used for structural purposes in buildings and structures shall comply with AA ASM 35 and AA ADM 1. The nominal loads shall be the minimum design loads required by Chapter 16.

SECTION 2003 - INSPECTION

2003.1 Inspection. [OSHPD 1 & 4] *Inspection of Aluminum shall be required in accordance with the requirements for steel in Chapter 17A.*

(All existing amendments are continued without any change)

NOTATION:
Authority: Health and Safety Code Section 129850
Reference: Health and Safety Code Sections 1275,129850 and 129790

CHAPTER 21
MASONRY

(All existing amendments that are not revised shall continue without any change)

NOTATION:
Authority: Health and Safety Code Section 129850
Reference: Health and Safety Code Sections 1275 and 129850

CHAPTER 21A
MASONRY

...

SECTION 2101A
GENERAL

2101A.1 Scope. This chapter shall govern the materials, design, construction and quality of masonry.

2101A.1.1 Application. *The scope of application of Chapter 21A is as follows:*

1. *[Reserved for DSA]*
2. *Applications listed in Section 1.10.1, and 1.10.4 regulated by the Office of Statewide Health Planning and Development (OSHPD).These applications include hospitals, skilled nursing facilities, intermediate care facilities and correctional treatment centers.*

> ***Exception: [OSHPD 2]*** *Single-story Type V skilled nursing or intermediate care facilities utilizing wood-frame or light-steel-frame construction as defined in Health and Safety Code Section 129725, which shall comply with Chapter 21 and any applicable amendments therein.*

2101A.1.2 Amendments in this chapter. *OSHPD adopt this chapter and all amendments.*

> ***Exception:*** *Amendments adopted by only one agency appear in this chapter preceded with the appropriate acronym of the adopting agency, as follows:*
>
> 1. *[Reserved for DSA]*
> 2. *Office of Statewide Health Planning and Development:*
> ***[OSHPD 1]*** *- For applications listed in Section 1.10.1.*
> ***[OSHPD 4]*** *- For applications listed in Section 1.10.4.*

2101A.1.3 Prohibition: *The following design methods, systems, and materials are not permitted by OSHPD:*

1. *Unreinforced Masonry.*
2. *Autoclaved Aerated Concrete (AAC) Masonry.*
3. *Empirical Design of Masonry.*
4. *Adobe Construction.*
5. *Ordinary Reinforced Masonry Shear Walls.*
6. *Intermediate Reinforced Masonry Shear Walls.*
7. *Prestressed Masonry Shear Walls.*
8. *Direct Design of Masonry.*

...

2101A.2 Design methods. Masonry shall comply with the provisions of TMS402/ACI 530/ASCE 5 ~~or TMS 403~~ as well as applicable requirements of this chapter.

...

SECTION 2102A
DEFINITIONS AND NOTATIONS

2102A.1 General. The following terms are defined in Chapter 2, *except those defined below which shall, for the purposes of this chapter, have the meanings shown herein:*

...

WALL. ...

Hollow-unit Masonry Wall. *Type of construction made with hollow masonry units in which the units are laid and set in mortar, reinforced, and grouted.* ~~*solid. except as provided in Section 2114A.*~~

...

SECTION 2103*A*
MASONRY CONSTRUCTION MATERIALS

2103*A*.1 Masonry units. Concrete masonry units, clay or shale masonry units, stone masonry units *and* glass unit masonry ~~and AAC masonry units~~ shall comply with Article 2.3 of TMS 602/ACI530.1/ASCE 6. Architectural cast stone shall conform to ASTM C 1364.

...

2103A.3 Grout. Grout shall comply with Article 2.2 of TMS 602/ACI 530.1/ASCE 6.

~~***2103A.13.1 Water.*** *Water content shall be adjusted to provide proper workability and to enable proper placement under existing field conditions, without segregation*~~

~~***2103A.13.2 Selecting Proportions.*** *Proportions of ingredients and any additives shall be based on laboratory or field experience with the grout ingredients and the masonry units to be used. Coarse grout proportioned by weight shall contain not less than 564 pounds of cementitious material per cubic yard (335 kg / m³).*~~

2103A.3.1 ~~***2103A.13.3***~~ ***Aggregate.*** *Coarse grout shall be used in grout spaces between wythes 2 inches (51 mm) or more in width as determined in accordance with TMS 602 Table 7, footnote 3, and in all* ~~*filled cell*~~ *grouted cells of hollow unit masonry construction.*

...

~~***2103A.15 Additives and Admixtures.***~~

~~***2103A.15.1 General.*** *Additives and admixtures to mortar or grout shall not be used unless approved by the enforcement agency.*~~

~~***2103A.15.2 Antifreeze compounds.*** *Antifreeze liquids, chloride salts or other such substances shall not be used in mortar or grout.*~~

2103A.5 ~~***2103A.15.3***~~ ***Air entrainment.*** *Air-entraining substances shall not be used in* ~~*mortar or*~~ *grout unless tests are conducted to determine compliance with the requirements of this code.*

SECTION 2104*A*
CONSTRUCTION

2104*A*.1 Masonry construction. Masonry construction shall comply with the requirements of Sections 2104*A*.1.1 ~~and 2104A.1.2~~ *through 2104A.1.3* and with TMS 602/ACI 530.1/ASCE 6.

...

2104A.1.3 ~~***2104A.5***~~ ***Grouted Masonry.***

2104A.1.3.1 ~~***2104A.5.1***~~ ***General conditions.*** *Grouted masonry shall be constructed in such a manner that all elements of the masonry act together as a structural element. At the time of laying, all masonry units shall be free of dust and dirt. Prior to grouting, the grout space shall be clean so that all spaces to be filled with grout do not contain mortar projections greater than 1/4 inch (6.4 mm), mortar droppings and other foreign material. Grout shall be placed so that all spaces to be grouted do not contain voids.*

Grout materials and water content shall be controlled to provide adequate fluidity for placement without segregation of the constituents, and shall be mixed thoroughly. Segregation of the grout materials and damage to the masonry shall be avoided during the grouting process.

Reinforcement and embedded items shall be clean, properly positioned and securely anchored against movement prior to grouting. Bolts shall be accurately set with templates or by approved equivalent means and held in place to prevent dislocation during grouting. Reinforcement, embedded items and bolts shall be solidly embedded in grout. Anchor bolts in the face shells of hollow masonry units shall be positioned to maintain a minimum of ½ in. of grout between the bolt and the face shell.

The grouting of any section of wall shall be completed in one day with no interruptions greater than one hour.

Grout pours greater than 12 inches (300 mm) in height shall be consolidated by mechanical vibration during placement before loss of plasticity in a manner to fill the grout space, and reconsolidated by mechanical vibration to minimize voids due to water loss. Grout pours less than 12 inches in height may be puddled.

Between grout pours or where grouting has been stopped more than an hour, a horizontal construction joint shall be formed by stopping all wythes at the same elevation and with the grout stopping a minimum of 1 1/2 inches (38 mm) below a mortar joint, except at the top of the wall. Where bond beams occur, the grout pour shall be stopped a minimum of 1/2 inch (12.7 mm) below the top of the masonry.

Grout shall not be handled nor pumped utilizing aluminum equipment unless it can be demonstrated with the materials and equipment to be used that there will be no deleterious effect on the strength of the grout.

2104A.1.3.1.1 ~~2104A.5.1.1~~ Reinforced grouted masonry.

2104A.1.3.1.1.1 ~~2104A.5.1.1.1~~ General. *Reinforced grouted masonry is that form of construction made with clay or shale brick or made with solid concrete building brick in which interior joints of masonry are filled by pouring grout around reinforcement therein as the work progresses.*

2104A.1.3.1.1.1.1 ~~2104A.5.1.1.1.1~~ Low-lift grouted construction. *Requirements for construction shall be as follows:*

1. *All units in the two outer wythes shall be laid with full-shoved head joint and bed mortar joints. Masonry headers shall not project into the grout space.*

2. *The minimum grout space for low-lift grout masonry shall be 2 1/2 inches (64 mm). All reinforcement and wire ties shall be embedded in the grout. The thickness of the grout between masonry units and reinforcement shall be a minimum of one bar diameter.*

3. *One tier of a grouted reinforced masonry wall may be carried up 12 inches (305 mm) before grouting, but the other tier shall be laid up and grouted in lifts not to exceed one masonry unit in height. All grout shall be puddled with a mechanical vibrator or wood stick immediately after placing so as to completely fill all voids and to consolidate the grout. All vertical and horizontal steel shall be held firmly in place by a frame or suitable devices.*

4. *Toothing of masonry walls is prohibited. Racking is to be held to a minimum.*

2104A.1.3.1.1.1.2 ~~***2104A.5.1.1.1.2***~~ ***High-lift grouted construction****. Where high-lift grouting is used, the method shall be subject to the approval of the enforcement agency. Requirements for construction shall be as follows:*

1. *All units in the two wythes shall be laid with full head and bed mortar joints.*

2. *The two wythes shall be bonded together with wall ties. Ties shall not be less than No. 9 wire in the form of rectangles 4 inches (102 mm) wide and 2 inches (51 mm) in length less than the overall wall thickness. Kinks, water drips, or deformations shall not be permitted in the ties. One tier of the wall shall be built up not more than 16 inches (406 mm) ahead of the other tier. Ties shall be laid not to exceed 24 inches (610 mm) on center horizontally and 16 inches (406 mm) on center vertically for running bond, and not more than 24 inches (610 mm) on center horizontally and 12 inches (305 mm) on center vertically for stack bond.*

3. *Cleanouts shall be provided for each pour by leaving out every other unit in the bottom tier of the section being poured or by cleanout openings in the foundation. The foundation or other horizontal construction joints shall be cleaned of all loose material and mortar droppings before each pour. The cleanouts shall be sealed after inspection and before grouting.*

4. *The grout space in high-lift grouted masonry shall be a minimum of 3 1/2 inches (89 mm). All reinforcement and wire ties shall be embedded in the grout. The thickness of the grout between masonry units and reinforcement shall be a minimum of one bar diameter.*

5. *Vertical grout barriers or dams of solid masonry shall be built across the grout space the entire height of the wall to control the flow of the grout horizontally. Grout barriers shall not more than 30 feet (9144 mm) apart.*

6. *An approved admixture of a type that reduces early water loss and produces an expansive action shall be used in high-lift grout.*

7. *Grouting shall be done in a continuous pour in lifts not exceeding 4 feet (1219 mm). Grout shall be consolidated by mechanical vibration only, and shall be reconsolidated after excess moisture has been absorbed, but before plasticity is lost. The grouting of any section of a wall between control barriers shall be completed in one day, with no interruptions greater than one hour.*

2104A.1.3.1.2 ~~***2104A.5.1.2***~~ ***Reinforced hollow-unit masonry.***

2104A.1.3.1.2.1 ~~***2104A.5.1.2.1***~~ ***General.*** *Reinforced hollow-unit masonry is that type of construction made with hollow-masonry units in which cells are continuously filled with grout, and in which reinforcement is embedded. All cells shall be solidly filled with grout in reinforced hollow-unit masonry.* ~~*, except as provided in Section 2114A.1.*~~

Exception: [redacted] *Reinforced hollow-unit masonry laid in running bond used for freestanding site walls* ~~*fences and*~~ *or interior nonbearing non-shear wall partitions may be* ~~*of hollow-unit masonry construction*~~ *grouted only in cells containing vertical and horizontal reinforcement.*

Construction shall be one of the two following methods: The low-lift method where the maximum height of construction laid before grouting is 4 feet (1220 mm), or the high-lift method where the full height of construction between horizontal cold joints is grouted in one operation. General requirements for construction shall be as follows:

1. *Bond shall be provided by lapping units in successive vertical courses. Where stack bond is used in reinforced hollow-unit masonry, the open-end type of unit shall be used with vertical reinforcement spaced a maximum of 16 inches (406 mm) on center.*

2. *Vertical cells to be filled shall have vertical alignment sufficient to maintain a clear grout space dimension of ~~unobstructed, continuous vertical cell measuring~~ not less than 2 inches by 3 inches (51 mm by 76 mm), except the minimum cell dimension for high-lift grout shall be 3 inches (76 mm), as determined in accordance with TMS 602 Table 7, footnote 3.*

3. *Grout shall be a workable mix suitable for placing without segregation and shall be thoroughly mixed. Grout shall be placed by pumping or an approved alternate method and shall be placed before initial set or hardening occurs. Grout shall be consolidated by mechanical vibration during placing and reconsolidated after excess moisture has been absorbed, but before workability is lost.*

4. *All reinforcement and wire ties shall be embedded in the grout. The space between masonry unit surfaces and reinforcement shall be a minimum of one bar diameter.*

5. *Horizontal reinforcement shall be placed in bond beam units with a minimum grout cover of 1 inch (25 mm) above steel for each grout pour. The depth of the bond beam channel below the top of the unit shall be a minimum of 1 1/2 inches (38 mm) and the width shall be 3 inches (76 mm) minimum.*

2104A.1.3.1.2.2 ***~~2104A.5.1.2.2~~*** ***Low-lift grouted construction****. Units shall be laid a maximum of 4 feet (1220 mm) before grouting. Grouting shall follow each 4 feet (1220 mm) of construction laid and shall be consolidated so as to completely fill all voids and embed all reinforcing steel. Horizontal reinforcement shall be fully embedded in grout in an uninterrupted pour.*

2104A.1.3.1.2.3 ***~~2104A.5.1.2.3~~*** ***High-lift grouted construction****. Where high-lift grouting is used, the method shall be approved by the enforcement agency. Cleanout openings shall be provided in every cell at the bottom of each pour of grout. Alternatively, if the course at the bottom of the pour is constructed entirely of inverted double open-end bond beam units, cleanout openings need only be provided for access to ~~in~~ every reinforced cell at the bottom of each pour of grout. The cleanouts shall be sealed before grouting. An approved admixture that reduces early water loss and produces an expansive action shall be used in the grout.*

SECTION 2105A
QUALITY ASSURANCE

...

2105A.2 Compressive Strength, f'_m. *The specified compressive strength, f'_m, assumed in design shall be 2000 psi (13.79MPa) ~~1,500 psi (10.34 MPa)~~ for all masonry construction using materials and details of construction required herein. Testing of the constructed masonry shall be provided in accordance with Section 2105A.4. ~~[OSHPD 1 & 4].~~*

EXCEPTION: [OSHPD 1 & 4] *Subject to the approval of the enforcement agency, higher values of f'_m may be used in the design of reinforced grouted masonry and reinforced hollow-unit masonry. The approval shall be based on prism test results submitted by the architect or engineer which demonstrate the ability of the proposed construction to meet prescribed performance criteria for strength and stiffness. The design ~~shall assume that the reinforcement will be placed in a location that will produce the largest stresses within the tolerances allowed~~*

~~in Section 2104A.1.1 and~~ shall take into account the mortar joint depth. In no case shall the f'_m assumed in design exceed 3,000 psi (20.7MPa).

Where an f'_m greater than 2000 psi (13.79MPa) ~~1,500 psi (10.34 MPa)~~ is approved, the architect or structural engineer shall establish a method of quality control of the masonry construction acceptable to the enforcement agency which shall be described in the contract specifications. Compliance with the requirements for the specified strength of constructed masonry shall be provided using prism test method ~~in accordance with Sections 2105A.2.2.2,~~ and core shear testing in accordance with Section 2105A.4. Substantiation for the specified compressive strength prior to the start of construction shall be obtained by using prism test method ~~in accordance with Sections 2105A.2.2.2.2~~ and Section 2105A.3. ~~2105A.2.2.1.4.~~

2105A.3 ~~2105A.2.2.1.4~~ Mortar and grout tests. These tests are to establish whether the masonry components meet the specified component strengths.

At the beginning of all masonry work, at least one test sample of the mortar ~~and grout~~ shall be taken on three successive working days and at least at one-week intervals thereafter. Samples of grout shall be taken for each mix design, each day grout is placed, and not less than every 5,000 square feet of masonry wall area. They shall meet the minimum strength requirement given in ASTM C270 Table 1 and ASTM C476/TMS 602 Section 2.2 ~~Sections 2103A.9 and 2103A.13~~ for mortar and grout respectively. Additional samples shall be taken whenever any change in materials or job conditions occur, as determined by the building official. ~~or whenever in the judgment of the architect, structural engineer or the enforcement agency such tests are necessary to determine the quality of the material.~~ When the prism test method ~~of Section 2105A.2.2.2~~ is used during construction, the tests in this section are not required.

Test specimens for mortar and grout shall be made as set forth in ASTM C 1586 and ASTM C 1019.

> **Exception:** For non-bearing non-shear masonry walls not exceeding total wall height of 12' above wall base, mortar test shall be permitted to be limited to those at the beginning of masonry work for each mix design.

2105A.4 Masonry core testing. ~~[OSHPD 1 & 4]~~ Not less than two cores shall be taken from each building for each 5,000 square feet (465 m^2) ~~of the greater~~ of the masonry wall area ~~or the floor area~~ or fraction thereof. ~~The architect or structural engineer in responsible charge of the project or his/her representative or the inspector of record shall select the areas for sampling.~~ The ~~inspector of record~~ approved agency shall perform or observe the coring of the masonry walls and sample locations shall be subject to approval of the registered design professional.

Core~~s~~ samples shall comply with the following:

1. Cored no sooner than 7 days after grouting of the selected area;
2. ~~b~~ Be a minimum of 3-3/4" in nominal diameter; and
3. Sampled ~~shall be taken~~ in such a manner as to exclude any masonry unit webs, mortar joint, or ~~and~~ reinforcing steel. If all cells contain reinforcement, alternate core locations or means to detect void or delamination shall be selected by the registered design professional and approved by the building official.

Visual examination of all cores shall be made by an approved agency ~~a laboratory acceptable to the building official~~ and the condition of the cores reported as required by the California Administrative Code. ~~One half of the number of cores taken shall be tested in s~~ Shear test both joints between the grout core and the outside wythes or face shell of the masonry 28 days after grouting of the sample area using a shear test apparatus acceptable to the enforcement agency. ~~Shear testing apparatus shall be of a design approved by the enforcement agency.~~ Core samples shall not be soaked before testing. Core samples to be tested shall be stored in sealed plastic bags or non-absorbent containers immediately after coring and for at least 5 days prior to testing. The average unit shear value for each pair of cores (4 shear tests) from each 5,000 square feet of wall area (or less) on the cross section of ~~the~~ core shall not be less than $2.5\sqrt{f'_m}$ psi.

All cores shall be submitted to an approved agency ~~the laboratory, acceptable to the building official,~~ for examination, ~~regardless of whether~~ even where the core specimens failed during the cutting operation. The approved agency ~~laboratory~~ shall report the location where each core was taken, the findings of their visual examination of each core, identify which cores were selected for shear testing, and the results of the shear tests.

Exceptions:

1. *Core sampling and testing is not required for non-bearing non-shear masonry walls, not exceeding total wall height of 12' above wall base, built with single-wythe hollow unit concrete masonry that attaches opposite face shells using webs cast as single unit, when designed using an f'_m not exceeding 2000 psi (13.79MPa).*
2. *An infrared thermographic survey or other nondestructive test procedures, shall be permitted to be approved as an alternative system to detect voids or delamination in grouted masonry in-lieu of core sampling and testing.*

SECTION 2106A
SEISMIC DESIGN

2106A.1 Seismic design requirements for masonry. Masonry structures and components shall comply with the requirements in Chapter 7 of TMS 402/ACI 530/ASCE 5 depending on the structure's *Seismic Design Category.*

2106A.1.1 Modifications to TMS 402 / ACI 530 / ASCE 5. *Modify TMS 402 / ACI 530 / ASCE 5 Section 7.4.4 ~~1.18~~ as follows:*

1. Minimum reinforcement requirements for Masonry Walls *The total area of reinforcement in reinforced masonry walls shall not be less than 0.003 times the sectional area of the wall. Neither the horizontal nor the vertical reinforcement shall be less than one third of the total. Horizontal and vertical reinforcement shall be spaced at not more than 24 inches (610 mm) center to center. The minimum reinforcing shall be No. 4, except that No. 3 bars may be used for ties and stirrups. Vertical wall reinforcement shall have dowels of equal size and equal matched spacing in all footings. Reinforcement shall be continuous around wall corners and through intersections. Only reinforcement which is continuous in the wall shall be considered in computing the minimum area of reinforcement. Reinforcement with splices conforming to TMS 402 / ACI 530 / ASCE 5 ~~as modified by Section 2107A and 2108A~~ shall be considered as continuous reinforcement.*

Horizontal reinforcing ~~ement~~ bars in bond beams shall be provided in the top of footings, at the top of wall openings, at roof and floor levels, and at the top of parapet walls. For walls 12 inches (nominal) (305 mm) or more in thickness, horizontal and vertical reinforcement shall be equally divided into two layers, except where designed as retaining walls. Where reinforcement is added above the minimum requirements, such additional reinforcement need not be so divided.

In bearing walls of every type of reinforced masonry, there shall be trim reinforcement of not less than one No. 5 bar or two No. 4 bars on all sides of, and adjacent to, every opening which exceeds 16 inches (406 mm) in either direction, and such bars shall extend not less than 48 diameters, but in no case less than 24 inches (610 mm) beyond the corners of the opening. The bars required by this paragraph shall be in addition to the minimum reinforcement elsewhere required.

When the reinforcement in bearing walls is designed, placed and anchored in position as for columns, the allowable stresses shall be as for columns.

Joint reinforcement shall not used as principal reinforcement in masonry. ~~designed by the strength design method.~~

2. Minimum reinforcement for masonry columns. *The spacing of column ties shall be as follows: not greater than 8 bar diameters, 24 tie diameters, or one half the least dimension of the column for the full column height. Ties shall be at least 3/8" in diameter and shall be embedded in grout. Top tie shall be within 2 inches (51 mm) of the top of the column or of the bottom of the horizontal bar in the supported beam.*

3. Lateral support. *Lateral support of masonry may be provided by cross walls, columns, pilasters, counterforts or buttresses where spanning horizontally or by floors, beams, girts or roofs where spanning vertically. Where walls are supported laterally by vertical elements, the stiffness of each vertical element shall exceed that of the tributary area of the wall.*

4. Anchor Bolts. *Bent bar anchor bolts shall not be allowed. The maximum size anchor shall be 1/2-inch (13 mm) diameter for 6-inch (152 mm) nominal masonry, 3/4-inch (19 mm) diameter for 8-inch (203 mm) nominal masonry, 7/8-inch (22 mm) diameter for 10-inch (254 mm) nominal masonry, and 1-inch (25mm) diameter for 12-inch (304.8 mm) nominal masonry.*

SECTION 2107A
ALLOWABLE STRESS DESIGN

2107*A*.1 General. The design of masonry structures using *allowable stress design* shall comply with Section 2106*A* and the requirements of Chapters 1 through 8 of TMS 402/ACI 530/ASCE 5 except as modified by Sections 2107*A*.2 through ~~2107A.4~~ *2107A.6.*

...

2107*A*.2 TMS 402/ACI 530/ASCE 5, Section *8.1.6.7.1.1*, lap splices. As an alternative to Section 8.1.6.7.1.1, it shall be permitted to design lap splices in accordance with Section 2107*A*.2.1.

2107*A*.2.1 Lap splices. The minimum length of lap splices for reinforcing bars in tension or compression, l_d, shall be

$l_d=0.002d_bf_s$ (Equation 21A-1)

For SI: $l_d=0.29d_bf_s$

but not less than 12 inches (305) mm). In no case shall the length of the lapped splice be less than 40 bar diameters, *and need not be greater than 72 bar diameters.*

where:

...

2107A.5 Modify TMS 402 / ACI 530/ASCE 5 by adding Section 8.1.7 ~~2.1.8~~ as follows:

8.1.7 ~~2.1.8~~ - Walls and Piers.

Thickness of Walls. *For thickness limitations of walls as specified in this chapter, nominal thickness shall be used. Stresses shall be determined on the basis of the net thickness of the masonry, with consideration for reduction, such as raked joints.*

The thickness of masonry walls shall be designed so that allowable maximum stresses specified in this chapter are not exceeded. Also, no masonry wall shall exceed the height or length-to-thickness ratio or the minimum thickness as specified in this chapter and as set forth in Table 2107A.5. ~~below.~~

Piers. *Every pier or wall section which width is less than three times its thickness shall be designed and constructed as required for columns if such pier is a structural member. Every pier*

or wall section which width is between three and five times its thickness or less than one half the height of adjacent openings shall have all horizontal steel in the form of ties except that in walls 12 inches (305 mm) or less in thickness such steel may be in the form of hair-pins.

TABLE 2107A.5 - MINIMUM THICKNESS OF MASONRY WALLS[1, 2]

TYPE OF MASONRY	*MAXIMUM RATIO UNSUPPORTED HEIGHT OR LENGTH TO THICKNESS[2,3]*	*NOMINAL MINIMUM THICKNESS (inches)*
BEARING OR SHEAR WALLS:		
1. Stone masonry	*14*	*16*
2. Reinforced grouted masonry	*25*	*6*
3. Reinforced hollow-unit masonry	*25*	*6*
NONBEARING WALLS:		
4. Exterior reinforced walls	*30*	*6*
5. Interior partitions reinforced	*36*	*4*

[1]For walls of varying thickness, use the least thickness when determining the height or length to thickness ratio.

[2]In determining the height or length-to-thickness ratio of a cantilevered wall, the dimension to be used shall be twice the dimension of the end of the wall from the lateral support.

[3]Cantilevered walls not part of a building and not carrying applied vertical loads need not meet these minimum requirements but their design must comply with stress and overturning requirements.

2107A.6 ~~2107A.8~~ [OSHPD 1 & 4] Modify TMS402/ACI 530/ASCE 5, Section 8.3.4.4 ~~2.3.4.4~~ by the following:

All reinforced masonry components that are subjected to in-plane forces shall have a maximum reinforcement ratio, ρ_{max}, not greater than that computed by equation 8-23. ~~2-23.~~

SECTION 2108A
STRENGTH DESIGN OF MASONRY

2108A.1 General. The design of masonry structures using strength design shall comply with Section 2106*A* and the requirements of Chapters 1 through 7 and Chapter 9 of TMS 402/ACI 530/ASCE 5, except as modified by Sections 2108*A*.2 through 2108*A*.3.

~~**Exception:** AAC masonry shall comply with the requirements of Chapters 1 through 7 and Chapter 11 of TMS 402/ACI 530/ASCE 5.~~

...

SECTION 2109A
EMPIRICAL DESIGN OF MASONRY

Not permitted by OSHPD.

~~*Existing amendment deleting Section 2109 of IBC is retained and deleted Section 2109 is not shown here for clarity.*~~

SECTION 2110A
GLASS UNIT MASONRY

2110*A*.1 General. Glass unit masonry construction shall comply with Chapter 13 of TMS402/ACI 530/ASCE 5 and this section.

Masonry ~~of~~ glass block~~s~~ walls or panels shall be designed for seismic forces. ~~permitted in non-load-bearing exterior or interior walls and shall conform to the requirements of Section 2115A.~~ Stresses in glass block shall not be utilized. ~~Glass block may be solid or hollow and may contain inserts.~~

...

~~SECTION 2114A~~
~~NONBEARING WALLS~~

~~**2114A.1 General.** All nonbearing masonry walls shall be reinforced as specified in Section 2106A.1.1. Fences and interior nonbearing nonshear walls may be of hollow-unit masonry construction grouted in cells containing vertical and horizontal reinforcement. Nonbearing walls may be used to carry a superimposed load of not more than 200 pounds per linear foot (2.92 kN/m).~~

~~**1. Thickness.** Every nonbearing masonry wall shall be so constructed and have a sufficient thickness to withstand all vertical loads and horizontal loads, but in no case shall the thickness of such walls be less than the values set forth in Table 2107A.5.~~
~~Plaster shall not be considered as contributing to the thickness of a wall in computing the height-to-thickness ratio.~~

~~**2. Anchorage.** All nonbearing walls shall be anchored as required by Sections 1604A.8.2 and ASCE 7 Chapter 13. Suspended ceilings or other nonstructural elements shall not be used to provide anchorage for masonry walls.~~

~~SECTION 2115A~~
~~MASONRY SCREEN WALLS~~

~~**2115A.1 General.** Masonry units may be used in nonbearing decorative screen walls. Units may be laid up in panels with units on edge with the open pattern of the unit exposed in the completed wall.~~

~~**1. Horizontal Forces.** The panels shall be capable of spanning between supports to resist the horizontal forces specified in Chapter 16A. Wind loads shall be based on gross projected area of the block.~~

~~**2. Mortar Joints.** Horizontal and vertical joints shall not be less than 1/4 inch (6 mm) thick. All joints shall be completely filled with mortar and shall be "shoved joint" work. The units of a panel shall be so arranged that either the horizontal or the vertical joint containing reinforcing is continuous without offset. This continuous joint shall be reinforced with a minimum of 0.03 square inch (19 mm^2) of reinforcing steel and maximum spacing of 16 inches on center. Reinforcement may be embedded in mortar.~~

~~**3. Reinforcement.** Joint reinforcement may be composed of two wires made with welded ladder or trussed wire cross ties. In calculating the resisting capacity of the system, compression and tension in the spaced wires may be utilized. Ladder wire reinforcement shall not be spliced and shall be the widest that the mortar joint will accommodate, allowing 1/2 inch (13 mm) of mortar cover.~~

~~**4. Size of Panels.** The maximum size of panels shall be 144 square feet (13.4 m^2), with the maximum dimension in either direction of 15 feet (4572 mm). The specified thickness of the units for exterior applications shall not be less than 3 7/8 inches.~~

~~**5. Panel Support.** Each panel shall be supported on all edges by a structural member of concrete, masonry or steel. Supports at the top and ends of the panel shall be by means of confinement of the masonry by at least 1 inch (25 mm) into and between the flanges of a steel channel. The space between the end of the panel and the web of the channel shall be filled with~~

~~resilient material. The use of equivalent configuration in other steel section or in masonry or concrete is acceptable.~~

~~(All existing amendments, except where section is deleted in the model code, that are not revised above shall continue without any change)~~

NOTATION:
Authority: Health and Safety Code Section 130005(g) & 130021
Reference: Health and Safety Code Section 1275, 129790, 129850 & 130005(g)

CHAPTER 22
STEEL

~~(This Chapter is adopted without any amendments)~~

NOTATION:
Authority: Health and Safety Code Section 129850
Reference: Health and Safety Code Sections 1275 and 129850

CHAPTER 22A
STEEL

...

SECTION 2201*A*
GENERAL

2201*A*.1 Scope. The provisions of this chapter govern the quality, design, fabrication and erection of steel construction.

2201A.1.1 Application. *The scope of application of Chapter 22A is as follows:*

1. ~~(Reserved for DSA)~~

2. *Structures regulated by the Office of Statewide Health Planning and Development (OSHPD), which include those applications listed in Section 1.10.2, and 1.10.4.These applications include hospitals, skilled nursing facilities, intermediate care facilities and correctional treatment centers.*

   Exception: [OSHPD 2] *Single-story Type V skilled nursing or intermediate care facilities utilizing wood-frame or light-steel-frame construction as defined in Health and Safety Code Section 129725, which shall comply with Chapter 22 and any applicable amendments therein.*

2201A.1.2 Identification of amendments. *OSHPD adopt this chapter and all amendments.*

Exception: *Amendments adopted by only one agency appear in this chapter preceded with the appropriate acronym of the adopting agency, as follows:*

1. ~~(Reserved for DSA)~~
2. *Office of Statewide Health Planning and Development:*
   [OSHPD 1] *- For applications listed in Section 1.10.1.*
   [OSHPD 4] *- For applications listed in Section 1.10.4.*

...

SECTION 2204*A*
CONNECTIONS

2204*A*.1 Welding. The details of design, workmanship and technique for welding and qualification of welding personnel shall be in accordance with the specifications listed in Sections 2205*A*, 2206*A*, 2207*A*, 2208*A*, 2210*A* and 2211*A*. For *Special inspection* of welding, see Section 1705*A*.2.

...

2204A.4 ~~***2204A.2.2***~~ ***Column base plate.*** *When shear and / or tensile forces are intended to be transferred between column base plates and anchor bolts, provision shall be made in the design to eliminate the effects of oversized holes permitted in base plates by AISC 360 by use of shear lugs and / or welded shear transfer plates or other means acceptable to the enforcement agency, when the oversized holes are larger than the anchor bolt by more than 1/8 inch (3.2 mm). When welded shear transfer plates and shear lugs or other means acceptable to the enforcement agency are not used, the anchor bolts shall be checked for the induced bending stresses in combination with the shear stresses.*

SECTION 2205A
STRUCTURAL STEEL

2205*A*.1 General. The design, fabrication and erection of structural steel elements in buildings, structures and portions thereof shall be in accordance with AISC 360.

Exceptions: ***[OSHPD 1 & 4]***

1) *For members designed on the basis of tension, the slenderness ratio (L/r) shall not exceed 300, except for design of hangers and bracing in accordance with NFPA 13 and for rod hangers in tension.*
2) *For members designed on the basis of compression, the slenderness ratio (KL/r) shall not exceed 200, except for design of hangers and bracing in accordance with NFPA 13.*

2205*A*.2 Seismic Design. Where required, the seismic design, fabrication and erection of buildings, structures and portions thereof shall be in accordance with Section 2205A.2.1 or 2205A.2.2.

2205*A*.2.1 Structural steel seismic force-resisting system. The design, detailing, fabrication and erection of structural steel seismic force-resisting systems shall be in accordance with the provisions of Section 2205A.2.1.1 or 2205A.2.1.2, as applicable.

2205*A*.2.1.1 Seismic Design Category B or C. *Not permitted by OSHPD.* ~~Structures assigned to Seismic Design Category B or C shall be of any construction permitted in Section 2205. Where a response modification coefficient, R, in accordance with ASCE 7, Table 12.2-1 is used for the design of structural steel structures assigned to Seismic Design Category B or C, the structures shall be designed and detailed in accordance with the requirements of AISC 341.~~

~~**Exception:** The response modification coefficient, R, designated for "Steel systems not specifically detailed for seismic resistance, excluding cantilever column systems" in ASCE 7, Table 12.2-1 shall be permitted for systems designed and detailed in accordance with AISC 360, and need not be designed and detailed in accordance with AISC 341.~~

2205*A*.2.1.2 Seismic Design Category D, E or F. Structures assigned to *Seismic Design Category* D, E or F shall be designed and detailed in accordance with AISC 341. ~~, except as permitted in ASCE 7, Table 15.4-1.~~

2205*A*.2.2 Structural steel elements. The design, detailing, fabrication and erection of structural steel elements in seismic force-resisting system other than those covered in Section 2205A.2.1,

including struts, collectors, chords and foundation elements shall be in accordance with AISC 341.~~, where either of following applies:~~

~~1. The structure is assigned to seismic design category D, E or F, except as permitted in ASCE 7, Table 15.4-1.~~

~~2. A response modification coefficient, R, greater than 3 in accordance with ASCE 7, Table 12.2-1, is used for the design of structure assigned to seismic design category B or C.~~

2205A.3 ~~Reserved for 2205A.~~

2205A.4 MODIFICATIONS TO AISC 341. [OSHPD 1 & 4]

2205A.4.1 Glossary. *Modify Glossary by adding the following:*

Inelastic Rotation: *The permanent or plastic portion of the rotation angle between a beam and the column, or between a Link and the column of the Test Specimen, measured in radians. The Inelastic Rotation shall be computed based upon an analysis of the Test Specimen deformations. Sources of Inelastic Rotation include yielding of members and connectors, yielding of connection elements and slip between members and connection elements. For beam-to-column moment connections in Special Moment Frames, the inelastic rotation is represented by the plastic chord rotation angle calculated as the plastic deflection of the beam or girder, at the center of its span divided by the distance between the center of the beam span and the centerline of the panel zone of the beam-column connection. For link-to-column connections in Eccentrically Braced Frames, inelastic rotation shall be computed based upon the assumption that inelastic action is concentrated at a single point located at the intersection of the centerline of the link with the face of the column.*

2205A.4.2 Section E2. *Replace Section E2.6c Item # a by the following:*

(a) Use of IMF connections designed in accordance with ANSI/AISC 358 shall be as modified in Section 2205A.5.2.

2205A.4.3 ~~***2205A.4.2***~~ ***Section E3.*** *Replace Section E3.6b Item 1 by the following:*

(1) The connection shall be capable of sustaining an interstory drift angle of at least 0.04 radians and an inelastic rotation of 0.03 radians.

2205A.4.4 ~~***2205A.4.3***~~ ***Section E3.*** *Replace Section E3.6c Item # a by the following:*

(a) Use of SMF connections designed in accordance with ANSI /AISC 358 shall be as modified in Section 2205A.5. ~~*4.*~~

2205A.4.5 ~~***2205A.4.4***~~ ***Section F2. Special Concentrically Braced Frames (SCBF) modifications***

5b. Diagonal Braces, Add a new section as follows.

(4) The use of rectangular or square HSS are not permitted for bracing members, unless filled solid with cement grout having a minimum compressive strength of 3000 psi at 28 days. The effects of composite action in the filled composite brace shall be considered in the sectional properties of the system where it results in the more severe loading condition or detailing.

2205A.4.6 ~~***2205A.4.5***~~ ***Section F3.*** *Modify Section F3.6e Item 2 as follows:*

Exception is not permitted.

2205A.4.7 ~~***2205A.4.6***~~ ***Section K2.*** *Replace Section K2.3b as follows:*

The size of the beam or Link used in the Test Specimen shall be within the following limits:

1. *At least one of the test beams or Links shall be no less than 100% of the depth of the prototype beam or Link. For the remaining specimens, the depth of the test beam or Link shall be no less than 90 percent of the depth of the Prototype beam or Link.*

2. *At least one of the test beams or Links shall be no less than 100% of the weight per foot of the prototype beam or Link. For the remaining specimens, the weight per foot of the test beam or Link shall be no less than 75 percent of the weight per foot of the Prototype beam or Link.*

The size of the column used in the test specimen shall properly represent the inelastic action in the column, as per the requirements in Section K2.3a. In addition, the depth of the test column shall be no less than 90% of the depth of the prototype column.

Extrapolation beyond the limitations stated in this section shall be permitted subject to peer review and approval by the enforcement agency.

2205A.4.8 ~~***2205A.4.7***~~ ***Section K2.*** *Modify Section K2.8 by the following:*

The test specimen must sustain the required interstory drift angle, or link rotation angle, and inelastic rotation for at least two complete loading cycles.

2205A.5 MODIFICATIONS TO AISC 358. [OSHPD 1 & 4]

2205A.5.1.2. Design Requirements, 2.1 Special and Intermediate Moment Frame Connection Types, Table 2-1 Prequalified Moment Connections modifications

The prequalified bolted moment connections are not permitted in buildings.

Exceptions:

1. *Erection bolts are permitted.*
2. *The approved moment connection in accordance with AISC 358 Chapter 10 as permitted by the exception to Section 2206A.2.*

2205A.5.2 Moment Connection - Chapter 11. *The welded side plate steel moment connection shall be permitted provided:*

1. *The beams shall consist of either rolled or built-up wide flange sections.*

2. *The biaxial dual-strong axis and column minor axis configurations of the moment connection shall be considered as an alternative system.*

3. *For SMF and IMF systems, U-shaped cover plates shall be used and the hinge-to-hinge span to beam depth, L_h/d, shall be greater than or equal to 5.*

4. *The width-to-thickness ratios for beam flanges shall not be less than 3.*

5. *The spacing for lateral bracing of wide flange beams, L_b, shall include the length of the side plate at beam ends.*

6. *The extension of the side plates beyond the face of the column shall be within the range of 0.77d to 1.0d.*

7. *The gap-to-side plate thickness ratio shall range from 2.1 to 2.3.*

SECTION 2206*A*
COMPOSITE STRUCTURAL STEEL AND CONCRETE STRUCTURES

2206*A*.1 General. Systems of structural steel elements acting compositely with reinforced concrete shall be designed in accordance with AISC 360 and ACI 318, excluding ACI 318 Chapter 14.

2206*A*.2 Seismic Design. Where required, the seismic design, fabrication and erection of composite steel and concrete systems shall be in accordance with the additional provisions of Section 2206*A*.2.1.

2206*A*.2.1 Seismic requirements for composite structural steel and concrete construction. Where a response modification coefficient, *R*, in accordance with ASCE 7, Table 12.2-1 is used for the design of systems of structural steel acting compositely with reinforced concrete, the structures shall be designed and detailed in accordance with the requirements of AISC 341 *and shall be considered as an alternative system.*

Exception: *Steel and concrete composite special moment frame with the approved moment connections in accordance with AISC 358 Chapter 10 shall be permitted provided:*

1. Beams are provided with Reduced Beam Sections (RBS),

~~*2. Columns shall be Hollow Structural Sections (HSS) and completely filled with structural concrete having unit weight not less than 110 pounds per cubic foot (17 kN/m³). Concrete shall have 28-day compressive strength not less than 4,000 psi (28 MPa).*~~

2. ~~3.~~Web extension to beam web two sided fillet weld welds are sized to develop expected strength of the beam web and shall not be less than a ¼ inch fillet weld, and

~~*4. The high strength bolt design shall consider interaction between shear and tension as required by AISC 360, and*~~

3. ~~5.~~ The built-up box column wall thickness shall not be less than 1.25" and ~~T~~ the HSS column wall thickness shall not be less than ½ inch.

...

SECTION 2207A
STEEL JOISTS

...

2207*A*.4 Steel joist drawings. Steel joist placement plans shall be provided to show the steel joist products as specified on the *approved construction documents* and are to be utilized for field installation in accordance with specific project requirements as stated in Section 2207*A*.2. Steel joist placement plans shall include, at a minimum, the following:

...

~~Steel joist placement plans do not require the seal and signature of the joist manufacturer's registered design professional.~~

...

2207A.6 Joist Chord Bracing. *The chords of all joists shall be laterally supported at all points where the chords change direction.*

...

SECTION 2208*A*
STEEL CABLE STRUCTURES

2208*A*.1 General. The design, fabrication and erection including related connections, and protective coatings of steel cables for buildings shall be in accordance with ASCE 19.

~~**2208.2 Seismic requirements for steel cable.** The design strength of steel cables shall be determined by the provisions of ASCE 19 except as modified by these provisions.~~

> ~~1. A load factor of 1.1 shall be applied to the prestress force included in T_3 and T_4 as defined in Section 3.12.~~
> ~~2. In Section 3.2.1, Item (c) shall be replaced with "1.5 T_3" and Item (d) shall be replaced with "1.5 T_4."~~

...

SECTION 2210*A*
COLD-FORMED STEEL

2210*A*.1 General. The design of cold-formed carbon and low alloy steel structural members shall be in accordance with AISI S100. The design of cold-formed stainless-steel structural members shall be in accordance with ASCE 8. Cold formed steel light-frame construction shall also comply with Section 2211*A*. Where required, the seismic design of cold formed steel structures shall be in accordance with the additional provisions of Section 2210*A*.2.

2210*A*.1.1 Steel decks. The design and construction of cold formed steel decks shall be in accordance with this section.

> **2210*A*.1.1.1 Noncomposite steel floor decks.** Noncomposite steel floor decks shall be permitted to be designed and constructed in accordance with ANSI/SDI-NC1.0.
>
> **2210*A*.1.1.2 Steel roof deck.** Steel roof decks shall be permitted to be designed and constructed in accordance with ANSI/SDI-RD1.0. *The base material thickness of steel deck shall not be less than 0.0359 inch (0.9 mm) (20 gage).*
>
> **2210A.1.1.3 Composite slabs on steel decks.** Composite slabs of concrete and steel deck shall be permitted to be designed and constructed in accordance with ANSI/SDI-C.

2210*A*.2 Seismic requirements for cold-formed steel structures. Where a response modification coefficient, *R*, in accordance with ASCE 7, Table 12.2-1 is used for the design of cold-formed steel structures, the structures shall be designed and detailed in accordance with the requirements of AISI S100~~,~~ *and* ASCE 8. ~~, or, for cold-formed steel special bolted moment frames, AISI S110.~~

SECTION 2211*A*
COLD-FORMED STEEL LIGHT-FRAME CONSTRUCTION

2211*A*.1 General. The design and installation of structural and nonstructural members utilized in cold-formed steel light-frame construction where the specified minimum base steel thickness is not greater than 0.1180 inches (2.997 mm) shall be in accordance with AISI S200 and Sections 2211*A*.2 through 2211*A*.7, or AISI S220, as applicable.

...

2211*A*.3 Truss design. Cold-formed steel trusses shall be designed in accordance with AISI S214, Sections 2211*A*.3.1 through 2211*A*.3.4 and accepted engineering practice.

Complete engineering analysis and truss design drawings shall accompany the construction documents submitted to the enforcement agency for approval. When load testing is required, the test report shall be submitted with the truss design drawings and engineering analysis to the enforcement agency.

2211*A*.3.1 Truss design drawings. The truss design drawings shall conform to the requirements of Section B2.3 of AISI S214 and shall be provided with the shipment of trusses delivered to the job site. The truss design drawings shall include the details of permanent individual truss member restraint/bracing in accordance with Section B ~~6(a) or B 6(c)~~ of AISI S214 where these methods are utilized to provide restraint/bracing.

2211*A*.3.2 Deferred submittals. ~~AISI S214 Section B4.2 shall be deleted.~~ *Not permitted by OSHPD.*

...

2211*A*.4 Structural wall stud design. Structural wall studs shall be designed in accordance with either AISI S211 or AISI S100.

Cold formed steel stud foundation plates or sills shall be bolted or fastened to the foundation or foundation wall in accordance with Section 2304.3.4, Item 2.

2211*A*.6 Lateral design. Light-frame shear walls, diagonal strap bracing that is part of a structural wall and diaphragms used to resist wind, seismic and other in-plane lateral loads shall be designed in accordance with AISI S213.

Shear wall assemblies in accordance with ~~per~~ Section C2.2.3 of AISI S213 are not permitted within the seismic force-resisting system of buildings.

2211*A*.7 Prescriptive framing. *Not permitted by OSHPD.* ~~Detached one- and two-family dwellings and townhouses, less than or equal to three stories above grade plane, shall be permitted to be constructed in accordance with AISI S230 subject to the limitations therein.~~

...

SECTION 2213A
TESTING AND FIELD VERIFICATION

2213A.1 Tests of High-strength Bolts, Nuts and Washers. *High-strength bolts, nuts and washers shall be sampled and tested by an approved independent testing laboratory for conformance with the requirements of applicable ASTM standards.*

[OSHPD 1 & 4] *A minimum of 3-samples per lot, as defined in the ASTM standards for bolts [& not nuts and washers], shall be tested for tensile properties in accordance with ASTM F606, but need not exceed 3-samples per 400-bolts.*

2213A.2 Tests of End-welded Studs. *End-welded studs shall be tested in accordance with ~~per~~ the requirements of the AWS D1.1, Sections 7.7 and 7.8.*

~~[All existing amendments that are not included above shall continue without any change]~~

NOTATION:
Authority: Health and Safety Code Section 130005(g) & 130021
Reference: Health and Safety Code Section 1275, 129790, 129850 & 130005(g)

CHAPTER 23
WOOD

...

SECTION 2301
GENERAL

2301.1 Scope. The provisions of this chapter shall govern the materials, design, construction and quality of wood members and their fasteners.

2301.1.1 Application. [OSHPD 1, 2 & 4] *The scope of application of Chapter 23 is as follows:*

1. *[Reserved for DSA].*
2. *Applications listed in Section 1.10, regulated by the Office of Statewide Health Planning and Development (OSHPD). These applications include hospitals, skilled nursing facilities, intermediate care facilities and correctional treatment centers.*

   Exception: *For applications listed in Section 1.10.3 (Licensed Clinics), the provisions of this chapter without OSHPD amendments identified in accordance with Section 2301.1.2 shall apply.*

2301.1.2 Identification of amendments. [OSHPD 1, 2 & 4] *Office of Statewide Health Planning and Development amendments appear in this chapter preceded with the appropriate acronym, as follows:*

1. *[Reserved for DSA].*

2. *Office of Statewide Health Planning and Development:*

[OSHPD 1] *- For applications listed in Section 1.10.1.*
[OSHPD 2] *- For applications listed in Section 1.10.2.*
[OSHPD 4] *- For applications listed in Section 1.10.4.*

2301.1.3 Reference to other chapters.

2301.1.3.1 ***[OSHPD 1 & 4]*** *Where reference within this chapter is made to sections in Chapters 16, 17, 18, 19, 21~~,~~ and 22~~, and 34,~~ the provisions in Chapters 16A, 17A, 18A, 19A, 21A~~,~~ and 22A~~, and 34A~~ respectively shall apply instead.*

2301.1.3.2 (Reserved for DSA).

2301.1.4 [Relocated from Section 2301.1.2] Prohibition. [OSHPD 1, 2 & 4] *The following design methods, systems, and materials are not permitted by OSHPD:*

1. *Straight-sheathed horizontal lumber diaphragms. ~~are not permitted.~~*
2. *Gypsum-based sheathing shear walls and portland cement plaster shear walls. ~~are not permitted.~~*
3. *Shear wall foundation anchor bolt washers ~~shall be provided~~ in accordance with ~~AF & PA SDPWS Section 4.3.6.4.3. The~~ exception to ~~AF & PA~~ AWC SDPWS Section 4.3.6.4.3. ~~shall not apply.~~*
4. *Wood structural panel shear walls and diaphragms using staples as fasteners. ~~are not permitted.~~*
5. *Unblocked shear walls. ~~are not permitted.~~*
6. *Any wood structural panel sheathing used for diaphragms and shear walls, that are part of the seismic force-resisting system, ~~shall be~~ not applied directly to framing members.*
7. *Single and double diagonally sheathed lumber walls ~~shall not be~~ used to resist seismic forces.*
8. *[Relocated from Section 2301.2] Log structures in accordance with ICC 400. ~~are not permitted by OSHPD.~~*
9. *Cross-laminated timber used as part of the seismic force resisting system, unless approved as an alternative system in accordance with Section 104.11.*

2301.2 General design requirements. The design of structural elements or systems, constructed partially or wholly of wood or wood-based products, shall be in accordance with one of the following methods:

...

5. The design and construction of log structures shall be in accordance with the provisions of ICC 400.

   ~~[Relocated to Section 2301.1.4]~~. ~~***Exception: [OSHPD 1, 2, & 4]*** *Log structures are not permitted by OSHPD.*~~

...

SECTION 2302
DEFINITIONS

2302.1 Definitions. The following terms are defined in Chapter 2:

...

NATURALLY DURABLE WOOD.
Decay resistant.
Termite resistant.

...

SECTION 2303
MINIMUM STANDARDS AND QUALITY

2303.1 General. Structural sawn lumber; end-jointed lumber; prefabricated wood I-joists; structural glued-laminated timber; wood structural panels, fiberboard sheathing (when used structurally); hardboard siding (when used structurally); particleboard; preservative-treated wood; structural log members; structural composite lumber; round timber poles and piles; fire-retardant-treated wood; hardwood plywood; wood trusses; joist hangers; nails; and staples shall conform to the applicable provisions of this section.

...

2303.1.3 Structural glued-laminated timber. Glued-laminated timbers shall be manufactured and identified as required in ANSI/APA A190.1 and ASTM D 3737.

2303.1.3.1 Additional requirements. [OSHPD 1, 2 and 4] *The construction documents shall indicate the following:*

1. *Dry or wet service conditions.*
2. *Laminating combinations and stress requirements.*
3. *Species group.*
4. *Preservative material and retention, when preservative treatment is required.*
5. *Provisions for protection during shipping and field handling, such as sealing and wrapping in accordance with AITC 111.*

When mechanical reinforcement such as radial tension reinforcement is required, such reinforcement shall comply with AITC 404 and shall be detailed accordingly in the construction documents. Construction documents shall specify that the moisture content of laminations at the time of manufacture shall not exceed 12% for dry conditions of use.

The design of fasteners and connections shall comply with AITC 117, Section I, Item 6 (Connection Design), and NDS Appendix E.

~~*Refer to Section 1705A.5.4 for special inspection requirements during fabrication of structural glued laminated timbers.*~~

2303.1.4 Structural glued cross-laminated timber. Cross-laminated timbers shall be manufactured and identified as required in ANSI/APA PRG 320.

2303.1.4.1 Additional requirements. [OSHPD 1, 2 and 4] *Requirements in Section 2303.1.3.1 shall apply to glued cross-laminated timber.*

...

2303.4.1.4.1 Truss design drawings. Where required by the *registered design professional*, the *building official*, or the statutes of the jurisdiction in which the project is to be constructed, each individual truss design drawing shall bear the seal and signature of the truss designer.

Exceptions:

1. Where a cover sheet and truss index sheet are combined into a single sheet and attached to the set of truss design drawings, the single cover/truss index sheet is the only document required to be signed and sealed by the truss designer.
2. When a cover sheet and a truss index sheet are separately provided and attached to the set of truss design drawings, the cover sheet and the truss index sheet are the only documents required to be signed and sealed by the truss designer.
3. ***[OSHPD 1, 2, and 4]*** *Exceptions 1 and 2 are not permitted by OSHPD.*

2303.4.2 Truss placement diagram. The truss manufacturer shall provide a truss placement diagram that identifies the proposed location for each individually designated truss and references the corresponding truss design drawing. The truss placement diagram shall be provided as part of the truss submittal package, and with the shipment of trusses delivered to the job site. Truss placement diagrams that serve only as a guide for installation and do not deviate from the *permit* submittal drawings shall not be required to bear the seal or signature of the truss designer.

2303.4.3 Truss submittal package. The truss submittal package provided by the truss manufacturer shall consist of each individual truss design drawing, the truss placement diagram, the permanent individual truss member restraint/bracing method and details and any other structural details germane to the trusses; as applicable, the cover/truss index sheet.

2303.4.3.1 Additional Requirements. [OSHPD 1, 2, and 4] *In addition to Sections 2303.4.1 and 2303.4.2, the following requirements apply:*

1. ***Construction Documents.*** *The construction documents prepared by the registered engineer or licensed architect for the project shall indicate all requirements for the truss design, including:*
   1.1 Deflection criteria.
   1.2 Connection details to structural and non-structural elements (e.g. non-bearing partitions).
2. ***Requirements for Approval.*** *The truss design drawings and engineering analysis shall be provided to the enforcement agency and approved prior to truss fabrication, in accordance with the California Administrative Code. Alterations to the approved truss design drawings or manufactured trusses are subject to the approval of the enforcement agency.*

~~***3. Special inspection during truss manufacture.*** *Refer to Section 1705A.5.5 for special inspection requirements during the manufacture of open web trusses*~~

2303.4.4 Anchorage. The design for the transfer of loads and anchorage of each truss to the supporting structure is the responsibility of the *registered design professional.*

2303.4.5 Alterations to trusses. Truss members and components shall not be cut, notched, drilled, spliced or otherwise altered in any way without written concurrence and approval of a *registered design professional.* Alterations resulting in the addition of loads to any member (e.g., HVAC equipment, piping, additional roofing or insulation, etc.) shall not be permitted without verification that the truss is capable of supporting such additional loading.

2303.4.6 TPI 1 Specifications. In addition to Sections 2303.4.1 through 2303.4.5, the design, manufacture and quality assurance of metal-plate-connected wood trusses shall be in accordance with TPI 1. Job-site inspections shall be in compliance with Section 110.4, as applicable.

2303.4.7 Truss quality assurance. Trusses not part of a manufacturing process in accordance with either Section 2303.4.6 or a standard listed in Chapter 35, which provides requirements for quality control done under the supervision of a third-party quality control agency, shall be manufactured in compliance with Sections 1704.2 and 1704.6, as applicable.

...

SECTION 2304
GENERAL CONSTRUCTION REQUIREMENTS

2304.1 General. The provisions of this section apply to design methods specified in Section 2301.2.

2304.2 Size of structural members. Computations to determine the required sizes of members shall be based on the net dimensions (actual sizes) and not nominal sizes.

2304.3 Wall framing. The framing of exterior and interior walls shall be in accordance with the provisions specified in Section 2308 unless a specific design is furnished.

2304.3.1 Bottom plates. Studs shall have full bearing on a 2-inch-thick (actual $1^1/_2$-inch, 38 mm) or larger plate or sill having a width at least equal to the width of the studs.

2304.3.2 Framing over openings. Headers, double joists, trusses or other approved assemblies that are of adequate size to transfer loads to the vertical members shall be provided over window and door openings in load-bearing walls and partitions.

2304.3.3 Shrinkage. Wood walls and bearing partitions shall not support more than two floors and a roof unless an analysis satisfactory to the building official shows that shrinkage of the wood framing will not have adverse effects on the structure or any plumbing, electrical or mechanical systems, or other equipment installed therein due to excessive shrinkage or differential movements caused by shrinkage. The analysis shall also show that the roof drainage system and the foregoing systems or equipment will not be adversely affected or, as an alternate, such systems shall be designed to accommodate the differential shrinkage or movements.

2304.3.4 Additional requirements. [OSHPD 1, 2, and 4] *The following additional requirements apply:*

1. *Engineering analysis shall be furnished that demonstrates compliance of wall framing elements and connections with Section 2301.2, Item 1 or 2.*
2. *Construction documents shall include detailing of sill plate anchorage to supporting masonry or concrete for all exterior and interior bearing, non-bearing and shear walls. Unless specifically designed in accordance with item 1 above, sills under exterior walls, bearing walls and shear walls shall be bolted to masonry or concrete with 5/8" diameter by 12 inch (16 mm by 305 mm) bolts spaced not more than four (4) feet (1219 mm) on center, with a minimum of two (2) bolts for each piece of sill plate. Anchor bolts shall have a 4 inch minimum and a 12 inch maximum clearance to the end of the sill plate, and 7 inch minimum embedment into concrete or masonry.*

   Unless specifically designed in accordance with item 1 above, sill plates under non-bearing interior partitions on concrete floor slabs shall be anchored at not more than four (4) feet (1219 mm) on center to resist a minimum allowable stress shear of 100 pounds per linear foot (1.4 kN/m) acting either parallel or perpendicular to the wall.

3. *Construction documents shall include detailing and limitations for notches and bored holes in wall studs, plates and sills.*

2304.4 Floor and roof framing. The framing of wood-joisted floors and wood framed roofs shall be in accordance with the provisions specified in Section 2308 unless a specific design is furnished.

2304.4.1 Additional requirements. [OSHPD 1, 2, and 4] *The following additional requirements apply:*

1. *Engineering analysis shall be furnished that demonstrates compliance of floor, roof and ceiling framing elements and connections with Section 2301.2, Items 1 or 2.*
2. *Construction documents shall include detailing and limitations for notches and bored holes in floor and roof framing members.*

...

2304.6.1 Wood structural panel sheathing.

...

~~***Exception:*** *[OSHPD 1 & 4] Wind pressure shall be calculated in accordance with Section 1609A.*~~

...

2304.10 Connections and fasteners.

...

2304.10.1 Fastener requirements. Connections for wood members shall be designed in accordance with the appropriate methodology in Section 2301.2. The number and size of fasteners connecting wood members shall not be less than that set forth in Table 2304.10.1.

2304.10.1.1 ~~***2304.9.1.1***~~ ***Additional requirements. [OSHPD 1, 2 and 4]*** *Fasteners used for the attachment of exterior wall coverings shall be of hot-dipped zinc-coated galvanized steel, mechanically deposited zinc-coated steel, stainless steel, silicon bronze or copper. The coating weights for hot-dipped zinc-coated fasteners shall be in accordance with ASTM A 153. The coating weights for mechanically deposited zinc coated fasteners shall be in accordance with ASTM B 695, Class 55 minimum.*

...

2304.12.1.2 Wood supported by exterior foundation walls. Wood framing members, including wood sheathing, that rest on exterior foundation walls and are less than 8 inches (203 mm) from exposed earth shall be of naturally durable or preservative-treated wood.

Exception: [OSHPD 1, 2 and 4] *At exterior walls where the earth is paved with an asphalt or concrete slab at least 18 inches (457 mm) wide and draining away from the building, the bottom of sills are permitted to be 6 inches (152 mm) above the top of such slab. Other equivalent means of termite and decay protection may be accepted by the enforcement agency.*

...

2304.12.1.4 Sleepers and sills. Sleepers and sills on a concrete or masonry slab that is in direct contact with earth shall be of naturally durable or preservative-treated wood.

2304.12.1.4 ~~***2304.11.2.4.1***~~ ***Additional Requirements. [OSHPD 1, 2, and 4]*** *Stud walls or partitions at shower or toilet rooms with more than two fixtures, and stud walls adjacent to unroofed paved areas shall rest on a concrete curb extending at least 6 inches (152 mm) above finished floor or pavement level.*

...

SECTION 2305
GENERAL DESIGN REQUIREMENTS FOR LATERAL-FORCE-RESISTING SYSTEMS

...

2305.1.1 Openings in shear panels. Openings in shear panels that materially affect their strength shall be detailed on the plans, and shall have their edges adequately reinforced to transfer all shearing stresses.

2305.1.2 Additional Requirements. *See Section 2301.1.4 for modifications to AWC SDPWS.* ~~*[Relocated to Section 2301.1.4]*~~. ~~***[OSHPD 1, 2 and 4]*** *The following limitations shall apply:*~~

~~1. Straight-sheathed horizontal lumber diaphragms are not permitted.~~
~~2. Gypsum based sheathing shear walls and portland cement plaster shear walls are not permitted.~~
~~3. Shear wall foundation anchor bolt washers shall be provided in accordance with AF & PA SDPWS Section 4.3.6.4.3. The exception to AF & PA SDPSWS Section 4.3.6.4.3 shall not apply.~~
~~4. Wood structural panel shear walls and diaphragms using staples as fasteners are not permitted.~~
~~5. Unblocked shear walls are not permitted.~~
~~6. Any wood structural panel sheathing used for diaphragms and shear walls that are part of the seismic force-resisting system shall be applied directly to framing members.~~
~~7. Single and double diagonally sheathed lumber walls shall not be used to resist seismic forces.~~

2305.2 Diaphragm deflection.

...

~~**Exception: [OSHPD 1, 2 & 4]** *Section 2305.2 is not permitted by OSHPD.*~~

...

2305.3 Shear wall deflection

...

~~**Exception: [OSHPD 1, 2 & 4]** *Section 2305.3 is not permitted by OSHPD.*~~

...

SECTION 2306
ALLOWABLE STRESS DESIGN

2306.1 Allowable stress design. The structural analysis and construction of wood elements in structures using *allowable stress design* shall be in accordance with the following applicable standards:

...

2306.2 Wood-frame diaphragms. Wood-frame diaphragms shall be designed and constructed in accordance with AWC SDPWS. Where panels are fastened to framing members with staples, requirements and limitations of AWC SDPWS shall be met and the allowable shear values set forth in Table 2306.2(1) or 2306.2(2) shall be permitted. The allowable shear values in Tables 2306.2(1) and 2306.2(2) are permitted to be increased 40 percent for wind design.

~~**Exception: [OSHPD 1, 2 & 4]** *Wood structural panel diaphragms using staples as fasteners are not permitted by OSHPD.*~~

...

2306.3 Wood-frame shear walls. 2306.3 Wood-frame shear walls. Wood-frame shear walls shall be designed and constructed in accordance with AWC SDPWS. Where panels are fastened to framing members with staples, requirements and limitations of AWC SDPWS shall be met and the allowable shear values set forth in Table 2306.3(1), 2306.3(2) or 2306.3(3) shall be permitted. The allowable shear values in Tables 2306.3(1) and 2306.3(2) are permitted to be increased 40 percent for wind design. Panels complying with ANSI/APA PRP-210 shall be permitted to use design values for Plywood Siding in the AWC SDPWS.

~~**Exception: [OSHPD 1, 2 & 4]** *Wood structural panel shear walls using staples as fasteners are not permitted by OSHPD.*~~

...

SECTION 2308
CONVENTIONAL LIGHT-FRAME CONSTRUCTION

...

2308.2.7 ~~*8.*~~ ***Additional requirements*** *[OSHPD 2] The use of conventional light-frame construction provisions in this section is permitted, subject to the following conditions:*

1. ~~*8.1.*~~ *The design and construction shall also comply with Section 2304 and Section 2305.*
2. ~~*8.2.*~~ *In conjunction with the use of provisions in Section 2308.6* ~~*2308.3 (Braced Wall Lines*~~ *Wall Bracing), engineering analysis shall be furnished that demonstrates compliance of lateral-force-resisting systems with Section 2305.*
3. ~~*8.3.*~~ *In addition to the use of provisions in Section 2308.4* ~~*2308.8 (Floor framing Joists)*~~*, engineering analysis shall be furnished that demonstrates compliance of floor framing elements and connections with Section 2301.2, Item 1 or 2.*
4. ~~*8.4.*~~ *In addition to the use of provisions in Section 2308.5* ~~*2308.9 (Wall*~~ *construction* ~~*Framing)*~~*, engineering analysis shall be furnished that demonstrates compliance of wall framing elements and connections with Section 2301.2, Item 1 or 2.*
5. ~~*8.5.*~~ *In addition to the use of provisions in Section 2308.7* ~~*2308.10 (Roof and Ceiling*~~ *Framing), engineering analysis shall be furnished demonstrating compliance of roof and ceiling framing elements and connections with Section 2301.2, Item 1 or 2.*

...

SECTION 2309
WOOD FRAME CONSTRUCTION MANUAL

2309.1 Wood Frame Construction Manual. Structural design in accordance with AWC WFCM shall be permitted for buildings assigned to Risk Category I or II subject to the limitations of Section 1.1.3 of the AWC WFCM and the load assumption contained therein. Structural elements beyond these limitations shall be designed in accordance with accepted engineering practice.

2309.1.1 Additional requirements [OSHPD 2] *The use of the AWC WFCM is permitted provided the design and construction also comply with Sections 2304, 2305, and 2301.2, Item 1 or 2 and engineering analysis is furnished demonstrating compliance.*

...

All existing amendments that are not revised above shall continue without any change.

NOTATION:
Authority: Health and Safety Code Section 130005(g) & 130021
Reference: Health and Safety Code Section 1275, 129790, 129850 & 130005(g)

CHAPTER 24
GLASS AND GLAZING

...

SECTION 2401
GENERAL

2401.1 Scope. The provisions of this chapter shall govern the materials, design, construction and quality of glass, light- transmitting ceramic and light-transmitting plastic panels for exterior and interior use in both vertical and sloped applications in buildings and structures.

...

SECTION 2403
GENERAL REQUIREMENTS FOR GLASS

2403.1 Identification. Each pane shall bear the manufacturer's mark designating the type and thickness of the glass or glazing material. The identification shall not be omitted unless approved and an affidavit is furnished by the glazing contractor certifying that each light is glazed in accordance with approved construction documents that comply with the provisions of this chapter. Safety glazing shall

be identified in accordance with Section 2406.2.

...

2403.2 Glass supports. Where one or more sides of any pane of glass are not firmly supported, or are subjected to unusual load conditions, detailed construction documents, detailed shop drawings and analysis or test data ensuring safe performance for the specific installation shall be prepared by a registered design professional.

2403.2.1 Additional Requirements. [OSHPD 1 and 4] *In addition to the requirements of Section 2403.2, glass supports shall comply with the following:*

1. *The construction documents and analysis or test data required per Section 2403.2 shall be submitted to the enforcement agency for approval.*

2. *Glass firmly supported on all four edges shall be glazed with minimum laps and edge clearances set forth in Table 2403.2.1.*

TABLE 2403.2.1
MINIMUM GLAZING REQUIREMENTS

Fixed Windows and Openable Windows Other Than Horizontal Siding					
GLASS AREA	***UP TO 6 SQ. FT.***	***6 TO 14 SQ. FT.***	***14 TO 32 SQ. FT.***	***32 TO 50 SQ. FT.***	***OVER 50 SQ. FT.***
× 0.0929 for m², × 25.4 for mm					
1. Minimum Frame Lap	*1/4"*	*1/4"*	*5/16"*	*3/8"*	*1/2"*
2. Minimum Glass Edge Clearance	*1/8"[1,2]*	*1/8"[1,2]*	*3/16"[1]*	*1/4"*	*1/4"[1]*
3. Continuous Glazing Rabbet and Glass Retainer[3]	*Required*				
4. Resilient Setting Material[4]	*Not Required*	*Required*			
Sliding Doors and Horizontal Sliding Windows					
GLASS AREA		*UP TO 14 SQ. FT.*	*14 TO 32 SQ. FT.*	*32 TO 50 SQ. FT.*	*OVER 50 SQ. FT.*
× 0.0929 for m², × 25.4 for mm					
5. Minimum Glass Frame Lap		*1/4"*	*5/16"*	*3/8"*	*1/2"*
6. Minimum Glass Edge Clearance		*1/8"[2]*	*3/16"*	*1/4"*	*1/4"*
7. Continuous Glazing Rabbet and Glass Retainer[3]		*Required above third story*	*Required*		
8. Resilient Setting Material[4]		*Not Required*		*Required*	

[1] Glass edge clearance in fixed openings shall not be less than required to provide for wind and earthquake drift.
[2] Glass edge clearance at all sides of pane shall be a minimum of 3/16 inch (4.8 mm) where height of glass exceeds 3 feet (914 mm).
[3] Glass retainers such as metal, wood or vinyl face stops, glazing beads, gaskets, glazing clips and glazing channels shall be of sufficient strength and fixation to serve this purpose.
[4] Resilient setting material shall include preformed rubber or vinyl plastic gaskets or other materials which are proved to the satisfaction of the building official to remain resilient.

...

SECTION 2410 [OSHPD 1 & 4]
STRUCTURAL SEALANT GLAZING (SSG)

2410.1 General. *The requirements of this section address the use of Structural Sealant Glazing (SSG). These requirements shall not be used for butt joint glazing, point supported glass, and glass fins.*

Design, construction, testing, and inspection shall satisfy the requirements of this code except as modified in Sections 2410.1.1 through 2410.1.4.

2410.1.1 Design. *Design of Structural Sealant Glazing (SSG) shall satisfy the following requirements:*

1. *SSG shall be weather tight and serviceable, as defined in AAMA 501.4, under design story drifts associated with the Design Earthquake and no glass fallout shall occur at the drifts determined by ASCE 7 Section 13.5.9.*

2. *The sealant utilized in the insulated glass units used in SSG shall be designed in accordance with ASTM C 1249. The insulated glass unit design shall be in accordance with ASTM C 1249 Section 6.7.2.*

3. *Allowable stress for SSG shall not exceed 20 psi and shall have a minimum factor of safety of 5 in accordance with ASTM C 1401.*

4. *Design methodology shall address seismic movement in accordance with ASTM C 1401 Section 30.3.4.*

5. *SSG systems shall be supported for self-weight and lateral loading at each floor level of the building.*

6. *Unitized SSG framing shall be anchored to the building floor bearing plate by screws or bolts and shall not rely upon gravity or frictional forces for attachment.*

7. *Framing shall satisfy the out-of-plane deflection requirements of this code.*

2410.1.2 Testing and Inspection. *Testing and inspection of Structural Sealant Glazing (SSG) shall satisfy the following requirements:*

a. *The seismic drift capability of structural sealant glazing shall be determined by tests in accordance with AAMA 501.6, AAMA 501.4 and ASCE 7 Section 13.5.9.2.*

b. *The applicability of the specific AAMA 501.6 and AAMA 501.4 testing shall be subject to approval by the building official.*

c. *The panel test specimens used in the AAMA 501.6 and AAMA 501.4 testing shall include all glass types (annealed, heat strengthened, laminated, tempered) and insulated glass units that comprise more than 5% of the total glass curtain wall area used in the building.*

d. *AAMA 501.4 test specimen shall include the same materials, sections, connections, and attachment details to the test apparatus as used in the building.*

e. *Serviceability tests of SSG test specimen shall be performed in accordance with AAMA 501.4 after seismic displacement tests to the design story drift.*

f. *The window wall system using structural sealant by different manufacturer/product category shall be qualified in accordance with AAMA 501.6 and AAMA 501.4 testing for the seismic drift required. Analysis as an alternative to testing is not acceptable for the purposes of satisfying the seismic drift requirements of the SSG system.*

g. *Where unitized SSG is used with horizontal stack joints at each floor level and split vertical mullions that can move independently, only a story height single unit need to be tested under AAMA 501.6. Where continuous horizontal bands of SSG are used in the building, either two or four sided, the aspect ratio (height-to-length) of the test specimen shall be less than 1.0, contain not less than two interior vertical joints and all joints (vertical in the case of two sided), including the perimeter of the glass, shall be glazed with SSG.*

h. *Where SSG continues around corners, the AAMA 501.4 test specimen shall include one corner panel to verify the kinematics of the corner condition under seismic drift.*

~~i.~~ *Quality assurance and inspection requirements shall include formalized post-installation tests using the Point Load Testing procedure in accordance with ASTM C 1392. The Point Load Tests shall be done after the initial installation.* ~~*, then once every year for 3 years, not less than one test per elevation each time.*~~

j. *Where the SSG is field assembled, hand pull tab tests in accordance with ASTM C1401 Section X2.1, one test every 100 linear feet, but not less than one test for each building elevation view shall be required.*

Existing AAMA 501.4 and 501.6 test results satisfying the requirements of this section shall be permitted, in lieu of project specific tests, when approved by the building official.

2410.1.3 Monitoring. *Short and Long term periodic performance monitoring shall be provided in accordance with ASTM C 1401, C 1392, and C 1394. Inspection frequencies recommended in ASTM C 1392 Section 5.1 shall be followed.*

~~*After every significant seismic event, where the ground shaking acceleration at the site exceeds 0.3g, or the acceleration at any monitored building level (if any) exceeds 0.8g, as measured by the seismic monitoring system in the building, the owner shall retain a structural engineer to make an inspection of the SSG system. The inspection shall include viewing the performance of the panel, structural sealant, glass, reviewing the strong motion records, and a visual examination of the overall performance for deterioration, offset or physical damage. A report for each inspection, including conclusions on the continuing adequacy of the SSG system, shall be submitted to the enforcement agency.*~~

2410.1.4 Construction Documents. *Complete design of the SSG system for gravity, wind, and seismic forces shall be subject to review by the enforcement agency. Construction documents shall show structural details of glass and curtain wall system including:*

1. *A design narrative explaining how the SSG is supported by the building and the mechanism used to accommodate seismic racking.*
2. *Type of SSG and whether field or shop built.*
3. *The means of supporting the glass during structural sealant curing time shall be shown in the construction documents.*
4. *Typical curtain wall panel elevation, plan view, and sections.*
5. *Details of building corner joint to verify how the corner vertical mullion will move to accommodate the seismic drift.*
6. *Joints between panel and floors at top and bottom.*
7. *Joint between panels – including vertical & horizontal stack joints at intermediate and edge mullion.*
8. *Member sizes for curtain wall panels.*
9. *Glass pane sizes, thickness and type of glass.*
10. *Contact width <u>and thickness</u> of structural sealant and sealant materials for shop and field installation/re-glazing.*
11. *Glass to aluminum joints (including primers, if any).*

12. *Maximum roof/floor dead and live load deflection of the roof/floor framing members supporting the exterior curtain wall system.*
13. *Required seismic separation or gap distance between the structural sealant glazing curtain wall and other adjacent cladding units.*
14. *Mitigation of galvanic reactions between the roof/floor slab anchors, steel screw connections of aluminum sections and the aluminum anchorage components, if any.*

All existing amendments that are not revised above shall continue without any change.

NOTATION:
Authority: Health and Safety Code Section 129850
Reference: Health and Safety Code Sections 1275, 129850 and 129790

CHAPTER 25
GYPSUM BOARD, GYPSUM PANEL PRODUCTS AND PLASTER

...

SECTION 2501
GENERAL

2501.1 Scope. Provisions of this chapter shall govern the materials, design, construction and quality of gypsum board, gypsum panel products, lath, gypsum plaster, cement plaster and reinforced gypsum concrete.

...

2501.1.1 ~~2501.2~~ Additional Requirements. [OSHPD 1 and 4] *Details of attachment for wall and ceiling coverings which are not provided for in this code ~~these regulations~~ shall be detailed in the approved construction documents.*

...

SECTION 2503
INSPECTION

2503.1 Inspection. Lath, gypsum board and gypsum panel products shall be inspected in accordance with Section 110.3.5.

2503.2 Additional requirements for inspection and testing. [OSHPD 1 and 4]

1. *Lath, ~~and~~ gypsum board and gypsum panel products shall be inspected in accordance with Chapter 17A and the California Administrative Code.*

2. *No lath, gypsum board and gypsum panel products ~~or gypsum wallboard~~ or their attachments shall be covered or finished until it has been inspected and approved by the inspector of record and/or special inspector.*

3. *The enforcement agency may require tests in accordance with Table 2506.2 to determine compliance with the provisions of this code. ~~these regulations~~.*

4. *The testing of gypsum board and gypsum panel ~~and gypsum~~ products shall conform with standards listed in Table 2506.2.*

...

SECTION 2504
VERTICAL AND HORIZONTAL ASSEMBLIES

2504.1 Scope. The following requirements shall be met where construction involves gypsum board, gypsum panel products or lath and plaster in vertical and horizontal assemblies.

...

2504.2 Additional Requirements. [OSHPD 1 and 4] *In addition to the requirements of this section, the horizontal and vertical assemblies of plaster, ~~or~~ gypsum board or gypsum panel products shall be designed to resist the loads specified in this code. ~~For suspended acoustical ceiling systems, see Section 2506. For gypsum construction, see Section 2508.~~*

2504.2.1 Wood Furring Strips. *Wood furring strips for ceilings fastened to floor or ceiling joist shall be nailed at each bearing with two common wire nails, one of which shall be a slant nail and the other a face nail, or by one nail having spirally grooved or annular grooved shanks approved by the enforcement agency for this purpose. All stripping nails shall penetrate not less than 1 3/4 inches (44.5 mm) into the member receiving the point. Holes in stripping at joints shall be subdrilled to prevent splitting.*

Where common wire nails are used to support horizontal wood stripping for plaster ceilings, such stripping shall be wire tied to the joists 4 feet (1219 mm) on center with two strands of No. 18 W&M gage galvanized annealed wire to an 8d common wire nail driven into each side of the joist 2 inches (51 mm) above the bottom of the joist or to each end of a 16d common wire nail driven horizontally through the joist 2 inches (51 mm) above the bottom of the joist, and the ends of the wire secured together with three twists of the wire.

SECTION 2505
SHEAR WALL CONSTRUCTION

...

2505.3 [OSHPD 1 and 4] *Section 2505.1 and 2505.2 are not permitted. ~~by OSHPD.~~*

...

SECTION 2507
LATHING AND PLASTERING

2507.1 General. Lathing and plastering materials and accessories shall be marked by the manufacturer's designation to indicate compliance with the appropriate standards referenced in this section and stored in such a manner to protect them from the weather.

2507.2 Standards. Lathing and plastering materials shall conform to the standards listed in Table 2507.2 and Chapter 35 and, where required for fire protection, shall also conform to the provisions of Chapter 7.

2507.3 Lath attachment to horizontal wood supports. [OSHPD 1 and 4] *Where interior or exterior lath is attached to horizontal wood supports, either of the following attachments shall be used in addition to the methods of attachment described in referenced standards listed in Table 2507.2.*

1. *Secure lath to alternate supports with ties consisting of a double strand of No. 18 W & M gage galvanized annealed wire at one edge of each sheet of lath. Wire ties shall be installed not less than 3 inches (76 mm) back from the edge of each sheet and shall be looped around stripping, or attached to an 8d common wire nail driven into each side of the joist 2 inches (51 mm) above the bottom of the joist or to each end of a 16d common wire nail driven horizontally through the joist 2 inches (51 mm) above the bottom of the joist and the ends of the wire secured together with three twists of the wire.*

2. *Secure lath to each support with 1/2-inch-wide (12.7 mm), 1 1/2-inch-long (38mm) No. 9 W & M gage, ring shank, hook staple placed around a 10d common nail laid flat under the surface of the lath not more than 3 inches (76 mm) from edge of each sheet. Such staples may be placed*

over ribs of 3/8-inch (9.5 mm) rib lath or over back wire of welded wire fabric or other approved lath, omitting the 10d nails.

SECTION 2508
GYPSUM CONSTRUCTION

2508.1 General.

...

2508.5.6 Diaphragm ceiling connection to partitions. [OSHPD 1 and 4] *Gypsum board shall not be used in diaphragm ceilings to resist lateral forces imposed by partitions. Connection of diaphragm ceiling to the vertical lateral force resisting elements shall be designed and detailed to transfer lateral forces.*

...

SECTION 2514
REINFORCED GYPSUM CONCRETE

2514.1 General. Reinforced gypsum concrete shall comply with the requirements of ASTM C 317 and ASTM C 956.

Exception: [redacted] ***[OSHPD 1 and 4]*** *Reinforced gypsum concrete shall be considered as an alternative system.*

...

[redacted]

NOTATION:
Authority: Health and Safety Code Section 129850
Reference: Health and Safety Code Sections 1275, 129850, and 129790

CHAPTER 34

RESERVED

Action taken during the 2012 Code Development Process removed Chapter 34, Existing Structures, from the IBC. The provisions of this chapter are contained in the International Existing Building Code. See Section 101.4.7.

CHAPTER 34A
EXISTING STRUCTURES

SECTION 3401A
GENERAL

3401A.1 Scope. *The provisions of this chapter shall control the alteration, repair, addition, and change of occupancy of existing structures for applications listed in Sections 1.10.1* ***[OSHPD 1]*** *~~and 1.10.4 [OSHPD 4]~~ regulated by the Office of Statewide Health Planning and Development (OSHPD). ~~These applications include hospitals, skilled nursing facilities, intermediate care facilities, and correctional treatment centers. Exception: [OSHPD 2] Single-story Type V skilled nursing or intermediate care facilities utilizing wood-frame or light-steel frame construction as defined in Health and Safety Code Section 129725, which shall comply with Chapter 34 and any applicable amendments therein.~~*

~~For~~ SFM and DSA-AC requirements for existing structures shall be enforced by the Office of Statewide Health Planning and Development (OSHPD). ~~refer to Chapter 34.~~

3401A.1.1 Additions, alterations and repairs. *The additions, alterations and repairs shall follow one of the three procedures listed below:*

1. *Provisions in Sections 3403A, 3404A and 3405A; or*
2. *Nonconforming buildings provisions in Section 3411A; or*
3. *Performance based or prescriptive provisions in Section 3412A.*

Items 1 through 3 above shall not be applied in combination with each other, except when explicitly permitted.

The services/systems, utilities and means of egress shall satisfy requirements in Sections 3416A and 3417A.

3401A.2 Maintenance. *Buildings and structures, and parts thereof, shall be maintained in a safe and sanitary condition. Devices or safeguards which are required by this code shall be maintained in conformance with the code edition under which they were installed. The owner or the owner's designated agent shall be responsible for the maintenance of buildings and structures. To determine compliance with this subsection, the building official shall have the authority to require a building or structure to be re-inspected. The requirements of this chapter shall not provide the basis for removal or abrogation of fire protection and safety systems and devices in existing structures.*

3401A.3 Compliance. *Alterations, repairs, additions and changes of occupancy to, or relocation of, existing buildings and structures shall comply with the provisions for alterations, repairs, additions and changes of occupancy or relocation, respectively, in the California Fire Code, California Mechanical Code, California Plumbing Code, and California Electrical Code. Where provisions of the other codes conflict with provisions of this chapter, the provisions of this chapter shall take precedence.*

3401A.4 Building materials and systems. *Building materials, equipment, and systems shall comply with the requirements of this section.*

3401A.4.1 Existing materials and equipment. *Materials and equipment already in use in a building in compliance with requirements or approvals in effect at the time of their erection or installation shall be permitted to remain in use unless determined by the building official to be unsafe ~~per~~ in accordance with Section 116.*

3401A.4.2 New and replacement materials and equipment. *Except as otherwise required or permitted by this code, materials and equipment permitted by the applicable code for new construction shall be used. Like materials shall be permitted for repairs and alterations, provided no hazard to life, health or property is created. Hazardous materials shall not be used where the code for new construction would not permit their use in building of similar occupancy, purpose, and location.*

3401A.4.3 Existing seismic force-resisting systems. *Where the existing seismic force-resisting system is a type that can be designated ordinary or is a welded steel moment frame constructed under a permit issued prior to October 25, 1994, values of R, Ω_0, and C_d for the existing seismic force-resisting system shall be those specified by this code for an ordinary system unless it is demonstrated that the existing system will provide performance equivalent to that of a detailed, intermediate or special system.*

3401A.5 Dangerous conditions. *The building official shall have the authority to require the elimination of conditions deemed dangerous.*

SECTION 3402A
DEFINITIONS

3402A.1 Definitions. *The following terms are defined in chapter 2.*

DANGEROUS.

~~***PRIMARY FUNCTION.***~~

SUBSTANTIAL STRUCTURAL DAMAGE.

~~***TECHNICALLY INFEASIBLE.***~~

3402A.2 Definitions for this Chapter. *The following words and terms shall, for the purposes of this chapter and as used elsewhere in the code, have the meanings shown herein. Definition provided in Section 1613A.2, ASCE 7 Section 11.2 and ASCE 41 shall apply when appropriate in addition to terms defined in this section:*

CHANGE IN FUNCTION. *See Section 1224.3 ~~A change in function is a change in activity, service or licensed service provided, within the project limits, that does not necessarily change the use, specific use, and/or occupancy. Conversion of a space that results in a change in activity such that the space will be required to satisfy the functional space requirements under a different code sub-section than that of the prior use is considered a change in function.~~*

~~***ASSOCIATED STRUCTURAL ALTERATIONS*** *means any change affecting existing structural elements or requiring new structural elements for vertical or lateral support of an otherwise nonstructural alteration.~~

EXISTING STRUCTURE. *A structure that has a valid certificate of occupancy issued by the building official.*

GENERAL ACUTE CARE HOSPITAL. *See Section 1224.3.*

NONSTRUCTURAL ALTERATION *is any alteration which neither affects existing structural elements nor requires new structural elements for vertical or lateral support and which does not increase the lateral shear force in any story by more than 5 percent.*

PEER REVIEW *refers to procedure contained in Section 3414A.*

REPAIR *as used in this chapter means all the design and construction work affecting existing or requiring new structural elements undertaken to restore or enhance the structural and nonstructural load resisting system participating in vertical or lateral response of a structure primarily intended to correct the effects of deterioration or impending or actual failure, regardless of cause.*

[Relocated from Section 3418A] ***SPC SEISMIC SEPARATION.*** *Means a building separation in accordance with the California Administrative Code, Chapter 6 Section 3.4.*

Unreinforced Masonry *as used in this chapter means masonry construction where reinforcements in any direction is less than minimum reinforcement specified in TMS 402 Section 7.3.2.6.*

Unreinforced Concrete *as used in this chapter means plain concrete as defined in ACI 318 Section 2.3.*

VOLUNTARY STRUCTURAL ALTERATION *is any alteration of existing structural element or addition of new structural elements which is not necessary for vertical or lateral support of other work and is initiated by the applicant primarily for the purpose of increasing the vertical or lateral load-carrying strength or stiffness of an existing building.*

SECTION 3403A
ADDITIONS

3403A.1 General. *Additions to any building or structure shall comply with the requirements of this code for new construction. Alterations to the existing building or structure shall be made to ensure that the existing building or structure together with the addition are no less conforming with the provisions of this code than the existing building or structure was prior to the addition. An existing building together with its additions shall comply with the height and area provisions of Chapter 5.*

3403A.2 Flood hazard areas. *For buildings and structures in flood hazard areas established in Section 1612A.3, any addition that constitutes substantial improvement of the existing structure, as defined in Section 202 ~~1612A.2~~, shall comply with the flood design requirements for new construction, and all aspects of the existing structure shall be brought into compliance with the requirements for new construction for flood design.*

For buildings and structures in flood hazard areas established in Section 1612A.3, any additions that do not constitute substantial improvement of the existing structure, as defined in Section 202 ~~1612A.2~~, are not required to comply with the flood design requirements for new construction.

3403A.3 Existing structural elements carrying gravity load. *Any existing gravity load-carrying structural element for which an addition and its related alterations cause an increase in design gravity load of more than 5 percent shall be strengthened, supplemented, replaced or otherwise altered as needed to carry the increased gravity load required by this code for new structures. Any existing gravity load-carrying structural element whose gravity load-carrying capacity is decreased shall be considered an altered element subject to the requirements of Section 3404A.3. Any existing element that will form part of the lateral load path for any part of the addition shall be considered an existing lateral load-carrying structural element subject to the requirements of Section 3403A.4.*

> ***3403A.3.1 Design live load.*** *Where the addition does not result in increased design live load, existing gravity load carrying structural elements shall be permitted to be evaluated and designed for live loads approved prior to the addition. If the approved live load is less than that*

required by Section 1607A, the area designed for the nonconforming live load shall be posted with placards of approved design indicating the approved live load. Where the addition does result in increased design live load, the live load required by Section 1607A shall be used.

3403A.4 Existing structural elements carrying lateral load. *Where the addition is structurally independent of the existing structure, existing lateral load-carrying structural elements shall be permitted to remain unaltered. Where the addition is not structurally independent of the existing structure, the existing structure and its addition acting together as a single structure shall be shown to meet the requirements of Sections 1609A and 1613A.*

Exceptions: *For incidental and minor additions:*

1) *Any existing lateral load-carrying structural element whose demand-capacity ratio with the addition considered is no more than 10 percent greater than its demand-capacity ratio with the addition ignored shall be permitted to remain unaltered. For purposes of calculating demand-capacity ratios, the demand shall consider applicable load combinations with design lateral loads or forces in accordance with Sections 1609A and 1613A. For purposes of this exception, comparisons of demand-capacity ratios and calculation of design lateral loads, forces and capacities shall account for the cumulative effects of additions and alterations since original construction.*

2) *~~For incidental additions, d~~ Drift limits based on original design code shall be permitted to be used in lieu of the drift limits required by ASCE 7.*

SECTION 3404A
ALTERATIONS

3404A.1 General. *Except as provided by this section, alterations to any building or structure shall comply with the requirements of this code for new construction. Alterations shall be such that the existing building or structure is no less conforming with the provisions of this code than the existing building or structure was prior to the alteration.*

Exceptions:

1. An existing stairway shall not be required to comply with the requirements of Section 1011 where the existing space and construction does not allow a reduction in pitch or slope.

2. Handrails otherwise required to comply with Section 1011.11 shall not be required to comply with the requirements of Section 1014.6 regarding full extension of the handrails where such extensions would be hazardous due to plan configuration.

3404A.2 Flood hazard areas. *For buildings and structures in flood hazard areas established in Section 1612A.3, any alteration that constitutes substantial improvement of the existing structure, as defined in Section 202 ~~1612A.2~~, shall comply with the flood design requirements for new construction, and all aspects of the existing structure shall be brought into compliance with the requirements for new construction for flood design.*

For buildings and structures in flood hazard areas established in Section 1612A.3, any alterations that do not constitute substantial improvement of the existing structure, as defined in Section 202 ~~1612A.2~~, are not required to comply with the flood design requirements for new construction.

3404A.3 Existing structural elements carrying gravity load. *Any existing gravity load-carrying structural element for which an alteration causes an increase in design gravity load of more than 5 percent shall be strengthened, supplemented, replaced or otherwise altered as needed to carry the increased gravity load required by this code for new structures. Any existing gravity load-carrying structural element whose gravity load-carrying capacity is decreased as part of the alteration shall be*

shown to have the capacity to resist the applicable design gravity loads required by this code for new structures.

3404A.3.1 Design live load. *Where the alteration does not result in increased design live load, existing gravity load carrying structural elements shall be permitted to be evaluated and designed for live loads approved prior to the alteration. If the approved live load is less than that required by Section 1607A, the area designed for the nonconforming live load shall be posted with placards of approved design indicating the approved live load. Where the alteration does result in increased design live load, the live load required by Section 1607A shall be used.*

3404A.4 Existing structural elements carrying lateral load. *Except as permitted by Section 3404A.5, where the alteration increases design lateral loads in accordance with Section 1609A or 1613A, or where the alteration results in a prohibited structural irregularity as defined in this code ~~ASCE 7~~, or where the alteration decreases the capacity of any existing lateral load-carrying structural element, the structure of the altered building or structure shall be shown to meet the requirements of Sections 1609A and 1613A.*

Exceptions: *For incidental and minor alterations:*

1) *Any existing lateral load-carrying structural element whose demand-capacity ratio with the alteration considered is no more than 10 percent greater than its demand-capacity ratio with the alteration ignored shall be permitted to remain unaltered. For purposes of calculating demand-capacity ratios, the demand shall consider applicable load combinations with design lateral loads or forces per Sections 1609A and 1613A. For purposes of this exception, comparisons of demand-capacity ratios and calculation of design lateral loads, forces, and capacities shall account for the cumulative effects of additions and alterations since original construction.*

2) *~~For incidental alterations, d~~ Drift limits based on original design code shall be permitted to be used in lieu of the drift limits required by ASCE 7.*

3404A.5 Voluntary seismic improvements. *Alterations to existing structural elements or additions of new structural elements that are not otherwise required by this chapter and are initiated for the purpose of improving the performance of the seismic force-resisting system of an existing structure or the performance of seismic bracing or anchorage of existing nonstructural elements shall be permitted, provided that an engineering analysis is submitted demonstrating the following:*

1. *The altered structure, and the altered structural and nonstructural elements are no less conforming with the provisions of this code with respect to earthquake design than they were prior to the alteration.*

2. *New structural elements are designed, detailed and connected to the existing structural elements as required by Chapter 16A. Alterations of existing structural elements shall be based on design demand required by Chapter 16A. ~~but~~ Demands for new or altered existing structural elements need not exceed the maximum load effect that can be transferred to the elements by the system.*

   ~~***Exception:*** *Seismic design in accordance with Sections 3411A and 3412A shall be permitted.*~~

3. *New, relocated or altered nonstructural elements are designed, detailed and connected to existing or new structural elements as required by Chapter 16A.*

4. *The alterations do not create a structural irregularity as defined in ASCE 7 or make an existing structural irregularity more severe.*

SECTION 3405A
REPAIRS

3405A.1 General. *Buildings and structures, and parts thereof, shall be repaired in conformance with Section 3401A.2. Work on non-damaged components that is necessary for the required repair of damaged components shall be considered part of the repair and shall not be subject to the requirements for alterations in this chapter. Routine maintenance required by Section 3401A.2, ordinary repairs exempt from permit in accordance with Section 105.2, and abatement of wear due to normal service conditions shall not be subject to the requirements for repairs in this section.*

3405A.2 Substantial structural damage to vertical elements of the lateral-force-resisting system. *A building that has sustained substantial structural damage to the vertical elements of its lateral-force-resisting system shall be evaluated and repaired in accordance with the applicable provisions of Sections 3404A.2.1 through 3404A.2.3.*

> ***3405A.2.1 Evaluation.*** *The building shall be evaluated by a registered design professional, and the evaluation findings shall be submitted to the building official. The evaluation shall establish whether the damaged building, if repaired to its pre-damage state, would comply with the provisions of this code for wind and earthquake loads. Wind loads for this evaluation shall be those prescribed in Section 1609A. Earthquake loads for this evaluation, if required, shall be permitted to be 75 percent of those prescribed in Section 1613A.*
>
> ***3405A.2.2 Extent of repair for compliant buildings.*** *If the evaluation establishes compliance of the pre-damage building in accordance with Section 3405A.2.1, then repairs shall be permitted that restore the building to its pre-damage state. ~~, based on material properties and design strengths applicable at the time of original construction.~~*
>
> ***3405A.2.3 Extent of repair for noncompliant buildings.*** *If the evaluation does not establish compliance of the pre-damage building in accordance with Section 3405A.2.1, then the building shall be rehabilitated to comply with applicable provisions of this code for load combinations, including wind or seismic loads. The wind loads for the repair shall be as required by the building code in effect at the time of original construction, unless the damage was caused by wind, in which case the wind loads shall be as required by this code. Earthquake loads for this rehabilitation design shall be those required for the design of the pre-damage building, but not less than ninety percent of those prescribed in Section 1613A. New structural members and connections required by this rehabilitation design shall comply with the detailing provisions of this code for new buildings of similar structure, purpose and location.*

3405A.3 Substantial structural damage to gravity load-carrying components. *Gravity load-carrying components that have sustained substantial structural damage shall be rehabilitated to comply with the applicable provisions of this code for dead and live loads. Snow loads shall be considered if the substantial structural damage was caused by or related to snow load effects. Existing gravity load-carrying structural elements shall be permitted to be designed for live loads approved prior to the damage. If the approved live load is less than that required by Section 1607A, the area designed for the nonconforming live load shall be posted with placards of approved design, indicating the approved live load. Non-damaged gravity load-carrying components that receive dead, live or snow loads from rehabilitated components shall also be rehabilitated or shown to have the capacity to carry the design loads of the rehabilitation design. New structural members and connections required by this rehabilitation design shall comply with the detailing provisions of this code for new buildings of similar structure, purpose and location.*

> ***3405A.3.1 Lateral force-resisting elements.*** *Regardless of the level of damage to vertical elements of the lateral force-resisting system, if substantial structural damage to gravity load-carrying components was caused primarily by wind or earthquake effects, then the building shall be evaluated in accordance with Section 3404A.2.1 and, if noncompliant, rehabilitated in accordance with Section 3404A.2.3.*

3405A.4 Less than substantial structural damage. *For damage less than substantial structural damage, repairs shall be allowed that restore the building to its pre-damage state. ~~, based on material properties and design strengths applicable at the time of original construction.~~ New structural members and connections used for this repair shall comply with the detailing provisions of this code for new buildings of similar structure, purpose and location.*

3405.5 Flood hazard areas. *For buildings and structures in flood hazard areas established in Section 1612A.3, any repair that constitutes substantial improvement of the existing structure, as defined in Section 202 ~~1612A.2~~, shall comply with the flood design requirements for new construction, and all aspects of the existing structure shall be brought into compliance with the requirements for new construction for flood design.*

For buildings and structures in flood hazard areas established in Section 1612A.3, any repairs that do not constitute substantial improvement or repair of substantial damage of the existing structure, as defined in Section 202 ~~1612A.2~~, are not required to comply with the flood design requirements for new construction.

SECTION 3406A
Reserved

SECTION 3407A
GLASS REPLACEMENT

3407A.1 Conformance. *The installation or replacement of glass shall be as required for new installations.*

SECTION 3408A
CHANGE OF OCCUPANCY OR FUNCTION

3408A.1 Conformance. *No change shall be made in the use or occupancy of any building, that would place the building in a different division of the same group of occupancy or in a different group of occupancies, unless such building is made to comply with the requirements of this code for the use ~~such division~~ or ~~group of~~ occupancy. Subject to the approval of the building official, the use or occupancy of existing buildings shall be permitted to be changed and the building is allowed to be occupied for purposes in other groups without conforming to all the requirements of this code for those groups, provided the new or proposed use is less hazardous, based on life and fire risk, than the existing use.*

> ***3408A.1.1 Change in function.*** *A change in function shall require compliance with all the functional requirements for new construction in this code, including requirements in Sections 1224, 1225, 1226, and 1227.*

3408A.2 Certificate of occupancy. *A certificate of occupancy shall be issued where it has been determined that the requirements for the new occupancy classification have been met.*

3408A.3 Stairways. *Existing stairways in an existing structure shall not be required to comply with the requirements of a new stairway as outlined in Section 1009 where the existing space and construction will not allow a reduction in pitch or slope.*

3408A.4 Structural. ~~Seismic.~~ *When a change of occupancy results in a structure being reclassified to a higher risk category, the structure shall conform to the seismic requirements for a new structure of the higher risk category.*

Exceptions: *Specific seismic detailing requirements of Section 1613A for a new structure shall not be required to be met where it can be shown that the level of performance is equivalent to that of a new structure. A demonstration of equivalence shall consider the regularity, over strength, redundancy, and ductility of the structure.*

SECTION 3409A
Reserved

SECTION 3410A
MOVED STRUCTURES

3410.1 Conformance. *Structures moved into or within the jurisdiction shall comply with the provisions of this code for new structures.*

SECTION 3411A
ADDITIONS, ALTERATIONS, REPAIRS, AND SEISMIC RETROFIT TO EXISTING BUILDINGS OR STRUCTURES DESIGNED IN ACCORDANCE WITH PRE-1973 BUILDING CODE.

3411A. 1 General. *Provisions of this section shall apply to hospital buildings which were originally designed to pre-1973 building code and not designated as SPC 3 or higher in accordance with Chapter 6 of the California Administrative Code:*

3411A.1.1 Incidental and minor structural alteration, additions or repairs. *Incidental and minor structural additions shall be permitted, provided the additions meet this code for new construction using importance factor, I_e, equal to or greater than 1.0. Alterations, or repair to existing gravity and lateral ~~load~~ force-resisting systems shall be made to conform to the requirements of Sections 3404A or 3405A respectively using importance factor, I_e, equal to or greater than 1.0.*

3411A.1.1.1 Nonstructural Components. *Component importance factor, I_p, shall be permitted to be 1.0.*

Exception: *Components required for life-safety purposes after an earthquake, including emergency and standby power systems, mechanical smoke removal systems, fire protection sprinkler systems, fire alarm control panels, and egress stairways shall have a component importance factor (I_p) of 1.5.*

3411A.1.2 Major structural alteration, additions, or repairs. *Major structural alterations, additions, or repairs shall be in accordance with Sections ~~3403A, 3404A, or 3405A respectively~~ 3412A.1.1.a or 3412A.1.1.c, as applicable.*

SECTION 3412A COMPLIANCE ALTERNATIVES
FOR ADDITIONS, ALTERATIONS, REPAIRS, AND SEISMIC RETROFIT TO EXISTING STRUCTURES

3412A.1 Adoption of ASCE 41. *Except for the modifications as set forth in Sections 3412A and 3413A all additions, alterations, repairs and seismic retrofit to existing structures or portions thereof shall be permitted to be designed in accordance with the provisions of ASCE 41. When ~~For~~ load combinations which do not include seismic forces are required, the new building code provisions of this code shall be applicable.*

3412A.1.1 ASCE 41 Section 1.4 – ~~Rehabilitation~~ Performance Objectives. *Target building performance level shall be as follows:*

a. ***For general acute care hospitals buildings along with all structures required for their continuous operation or access/egress:***

I. – *Immediate Occupancy (IO) Structural Performance Level (S-1) as defined in Section 2.3.1.1 ~~1.5.1.1~~ at Basic Safety Earthquake 1N (BSE-1N) Seismic Hazard Level; ~~as defined in Section 1.6.1.2~~ and ~~Collapse Prevention~~*

II. *Life Safety (LS) Structural Performance Level (S-3 ~~5~~) ~~per~~ as defined in Section 2.3.1.3 ~~1.5.1.5~~ at Basic Safety Earthquake 2N (BSE-2N) Seismic Hazard Level; ~~as defined in Section 1.6.1.1.~~ and*

III. *The nonstructural ~~performance level~~ components shall satisfy the requirements of this code for new construction. ~~hospital buildings.~~*

~~Exceptions:~~ *~~Buildings satisfying requirements of Sections 3411A or 3412A.2.~~*
Exception: *Performance objectives for upgrading nonconforming hospital buildings to SPC-4D and for incidental or minor alterations or repairs of SPC-4D buildings shall be in accordance with Section 3412A.2.3.2 of this code.*

b. ***For incidental and minor additions, alterations or repairs of pre-1973 Hospital Buildings which will not be used for general acute care services after January 1, 2030:*** *~~– Basic Safety Objective (BSO) Level as defined Section 1.4.1. BSO level includes~~*

I. *Life Safety ~~Building~~ Structural Performance Level (S-3 ~~-C~~) as defined in ASCE 41 Section 2.3.1.3 ~~1.5.3.3~~ at the Basic Safety Earthquake 1E (BSE-1E) Seismic Hazard Level; ~~as defined in Section 1.6.1.2~~ and*

II. *Collapse Prevention (CP) building performance level (5-D ~~E~~) ~~per~~ in accordance with Section 2.3.3.4 ~~1.5.3.4~~ at the Basic Safety Earthquake 2E (BSE-2E) Seismic Hazard Level; ~~as defined in Section 1.6.1.1.~~ and*

III. *The nonstructural components shall satisfy the requirements of Position Retention Nonstructural Performance Level (N-B) in accordance with ASCE 41 Section 2.3.2.2 at BSE-1E Seismic Hazard Level.*

~~Exceptions:~~ *~~Buildings satisfying requirements of Sections 3411A or 3412A.2.~~*

c. ***All others Hospital Buildings:***

I. *- ~~Immediate Occupancy (IO)~~ Operational Building Performance Level of (1-A ~~B~~) as defined in Section 2.3.3.1 ~~1.5.3.2~~ at Basic Safety Earthquake 1N (BSE-1N) Seismic Hazard Level; ~~as defined in Section 1.6.1.2~~ and*

II. *~~Collapse Prevention (CP)~~ Life Safety (LS) building performance level (S-3 ~~5-E~~) ~~per~~ as defined in Section 2.3.1.3 ~~1.5.3.4~~ at Basic Safety Earthquake 2N (BSE-2N) Seismic Hazard Level. ~~as defined in Section 1.6.1.1.~~*

3412A.1.2 Material Testing Required. *Use of material properties based on historical information as default values shall not be permitted.*

3412A.1.3 Analysis Procedure. *The selection of a particular analysis procedure from ASCE 41 shall be subject to the approval of the enforcement ~~agent~~ agency.*

3412A.1.4 Structural Design Criteria. *Prior to implementation of ASCE 41 Nonlinear Dynamic Procedure, the ground motion, analysis and design methods, material assumptions, and acceptance criteria proposed by the engineer shall be reviewed by the enforcement ~~agent~~ agency.*

3412A.1.5 Alternative Modeling Parameters and Acceptance Criteria. *Where analysis/modeling parameters or acceptance criteria for structural elements are not provided in ASCE 41 or are considered to be inadequate, the analysis/modeling parameters or acceptance criteria shall be permitted to be established on the basis of test, using a criteria acceptable to the building official, and ASCE 41 Section 7.6.3.*

3412A.1.6 ~~3412A.1.5~~ Construction, ~~S~~ structural observation, testing, and inspections. *Construction, testing, inspection, and structural observation requirements shall be as required for new construction.*

3412A.2 Seismic Evaluation and Retrofit of General Acute Care Hospitals for Compliance with the California Administrative Code, Chapter 6. *Notwithstanding any other requirements of this code, existing general acute care hospitals shall comply with the seismic evaluation requirements specified in Chapter 6, of the California Administrative Code, when applicable. Seismic retrofit to comply with requirements specified in Chapter 6 of the California Administrative Code shall be permitted to be in accordance with this section. When ~~For~~ load combinations which do not include seismic forces are required, the new building provisions of this code shall be applicable.*

3412A.2.1 SPC 5 and ~~NPC 4~~/NPC 5. *~~Structures and nonstructural components and systems satisfying the requirements of this Code for new buildings for Risk Category IV shall be considered to satisfy the requirements of SPC 5 and NPC 4. NPC 4 buildings satisfying operational requirements for NPC 5 of Table 11.1, Chapter 6 of the California Administrative Code shall be placed in non-structural performance category NPC 5.~~*

New ~~general acute care~~ hospitals (facility) ~~and~~ or new building(s), larger than 4000 sft., ~~required for general acute care services~~ designed and built to the requirements of this code for general acute care hospital buildings shall be considered to satisfy the requirements of SPC 5 and NPC 5.

3412A.2.2 SPC 5 using ASCE 41. *Structures shall be considered to comply with SPC 5 requirements of Table 2.5.3, Chapter 6 of the California Administrative Code where all of the following are satisfied: ~~satisfying the requirements of~~*

- *I. Immediate Occupancy structural performance level (S-1) in accordance with Section 2.3.1.1 ~~1.5.1.1~~ of ASCE 41 at BSE-1N;*
- *II. Life Safety ~~Collapse prevention~~ performance level S-3 ~~S-5~~ in accordance with Section 2.3.1.3 ~~1.5.1.5~~ of ASCE 41 at BSE-2N; and*
- *~~III.~~ Items identified in Chapter 6, Article 10 of the California Administrative Code, satisfying the requirements of ~~Immediate Occupancy~~ Operational Nonstructural performance level (N-A ~~B~~) ~~per~~ in accordance with Section 2.3.2.1 ~~1.5.2.2~~ of ASCE 41 at BSE-1N. ~~shall be considered to comply with SPC 5 requirements of Table 2.5.3, Chapter 6 of the California Administrative Code.~~*

3412A.2.3 SPC-4D. *Nonconforming hospital buildings satisfying the following requirements and one of Sections 3412A.2.3.1, 3412A.2.3.2 or 3412A.2.3.3, but not a combination thereof, shall be considered to satisfy the requirements of SPC-4D.*

1. *Approval of construction documents based on building characterization in accordance with the California Administrative Code (CAC) Chapter 6 Section 2.1.2.1, material properties in accordance with the CAC Chapter 6 Section 2.1.2.2 and Section 3413A.1.3 of this code, and a complete rational structural analysis shall be required.*
2. *Where the SPC-4D upgrade involves construction, a building permit prior to construction shall be required.*
3. *Where multiple building permits are used to upgrade a building to SPC-4D, a complete rational structural analysis to justify compliance with SPC-4D for the building in its final configuration, shall be submitted as part of the construction documents submittal to the Office for the last project.*
4. *Where the SPC-4D upgrade involves construction, buildings shall be assigned to SPC-4D after all projects required for SPC-4D are closed in compliance.*

3412A.2.3.1 Prescriptive compliance provisions for SPC-4D using the California Building Code, 1980 (CBC 1980). *Nonconforming Buildings shall satisfy the following requirements:*

1. *The California Building Code, 1980 (CBC 1980), as used in this chapter, consists of the Uniform Building Code, 1979 (UBC 1979) along with requirements contained in:*

a) California Code of Regulations, Title 24- Building Standards, dated February 2, 1980 (Revision record for Register 80, No. 5).
b) California Code of Regulations, Title 22 – Social Security, dated October 13, 1979 (Revision Record for Register 79, No 41).
c) California Code of Regulations, Title 17 – Public Health, dated October 13, 1979 (Revision Record for Register 79, No 41-B).

2. All existing structural elements of Seismic Force Resisting System (SFRS) shall satisfy the detailing requirements in the CBC 1980 or demonstrate that the level of seismic performance is equivalent to that given in the CBC 1980, as determined by the building official.

3. A continuous load path or paths with adequate strength and stiffness to transfer all the forces from the point of origin to final point of resistance shall be justified by analysis.

4. Site data report in accordance with the CBC 1980 shall establish that seismically induced differential settlement does not exceed 1" in 40'.

5. Adjacent buildings shall satisfy the SPC building separation requirements in accordance with the California Administrative Code, Chapter 6 Section 3.4.

6. The addition of new structural elements or strengthening of existing structural elements for retrofit of nonconforming buildings to SPC-4D shall comply with the following:

   a) The seismic demand (forces or displacements) shall be in accordance with the CBC 1980;
   b) Capacity, detailing and connections for new structural elements shall satisfy the requirements in this code (CBC 2016) for new construction; and
   c) The strengthening of existing structural elements shall use capacities determined in accordance with this code (CBC 2016) for new construction consistent with the detailing and connections used in the strengthened member.

7. All construction, quality assurance and quality control shall be in accordance with the new construction provisions of this code (CBC 2016).

8. Elements not part of the Seismic Force Resisting System (SFRS), including those identified in the California Administrative Code Chapter 6, Article 10, shall be evaluated using seismic forces and the requirements of the CBC 1980.

9. Any column or wall that forms part of two or more intersecting SFRS and is subjected to axial load due to seismic forces acting along either principal plan axis equaling or exceeding 20 percent of the axial design strength of the column or wall shall be evaluated for the most critical load effect due to application of seismic force in any direction. The most critical load effect may be deemed to be satisfied if members and their foundations are evaluated for 100 percent of the forces for one direction plus 30 percent of the forces for the perpendicular direction, whereby the combination produces the maximum effect.

   Exceptions: The following buildings (with structural irregularities or unusual configuration/system) shall not be eligible for the SPC-4D upgrade using the prescriptive provisions in this section:

   1. Buildings with prohibited irregularities in accordance with Section 1616A.1.10 of this code.

2. *Buildings taller than 5-stories or 65' height above the base having horizontal or vertical irregularities in accordance with ASCE 7 Tables 12.3-1 Items # 1a, 1b and 3 or 12.3-2 Items #1a, 1b, 5a and 5b.*
3. *Buildings with unusual configuration or structural system, as determined by the building official.*

3412A.2.3.2 SPC-4D using ASCE 41. *Structures shall be deemed to comply with the SPC-4D requirements of Table 2.5.3, Chapter 6 of the California Administrative Code, when all of the following are satisfied:*

1. *Damage control structural performance level (S-2) in accordance with Section 2.3.1.2.1 of ASCE 41 at BSE-1E;*
2. *Collapse Prevention Structural Performance Level (S-5) in accordance with Section 2.3.1.5 of ASCE 41 at BSE-2E; and*
3. *Items identified in Chapter 6, Article 10 of the California Administrative Code satisfy the requirements of Position Retention nonstructural performance level (N-B) in accordance with Section 2.3.2.2 at BSE-1E.*

3412A.2.3.3 Prescriptive compliance provisions for SPC-4D using the new building design requirements of this code. *Structures satisfying the requirements of this code for new general acute care hospital buildings design shall be deemed to satisfy the SPC-4D requirements of Table 2.5.3, Chapter 6 of the California Administrative Code.*

All existing structural elements of Seismic Force Resisting System (SFRS) shall satisfy the detailing requirements of this code for new construction or demonstrate that the level of seismic performance is equivalent, as determined by the building official. A demonstration of equivalence shall consider the regularity, overstrength, redundancy, and ductility of the structure.

Elements not part of the Seismic Force Resisting System (SFRS), including those identified in the California Administrative Code Chapter 6, Article 10, shall be evaluated using seismic forces and the requirements of this code for new general acute care hospital buildings.

3412A.2.4 ~~3412A.2.3~~ SPC 2 using ASCE 41. *Structures shall be considered to comply with SPC 2 requirements of Table 2.5.3, Chapter 6 of the California Administrative Code, when all of the following are satisfied: ~~.satisfying the requirements of~~*

I. *Life Safety structural performance level (S-3) in accordance with ~~per~~ Section 2.3.1.3 ~~1.5.1.3~~ of ASCE 41 at BSE-1E; and*
II. *Items identified in Chapter 6, Article 10 of the California Administrative Code satisfying the requirements of Position Retention ~~life safety~~ nonstructural performance level (N-B ~~C)~~ ~~per~~ in accordance with Section 2.3.2.2 ~~1.5.2.3 of ASCE 41~~ at BSE-1E. ~~shall be considered to comply with SPC 2 requirements of Table 2.5.3, Chapter 6 of the California Administrative Code.~~*

3412A.2.5 ~~3412A.2.4~~ NPC. *A continuous load path of sufficient strength and stiffness between the component and the supporting structure shall be verified. Local elements of the supporting structure shall be verified for the component loads where they control the design of the elements or their connections.*

3412A.2.5.1 NPC-4 and NPC-5 using ASCE 41: *Non-structural components for ~~Immediate Occupancy~~ Operational Nonstructural performance level (N-A ~~B~~) in Section 2.3.2.1 or NPC-4 ~~1.5.2.2~~ shall ~~meet~~ satisfy the requirements of this Code for new construction. ~~buildings.~~ Non-structural components for ~~Operational Nonstructural performance level (NPC-5) in Section 1.5.2.1~~ shall ~~meet~~ satisfy Operational performance level N-A/NPC-4 ~~B~~ and Section 1616A.1.40 Items 1 & 2 of this code. ~~3413A.1.30. Building satisfying the requirements of non-structural performance level NPC-5 and N- B as described in this section shall be considered to satisfy the requirements of NPC 5 & NPC 4 of Table 11.1, Chapter 6 of the California Administrative Code respectively.~~*

3412A.2.5.2 NPC-2, NPC-3 and NPC-3R using ASCE 41: *Operational ~~Immediate Occupancy~~ Nonstructural performance level (N-A ~~B~~) ~~in Section 1.5.2.2~~ and Position Retention ~~Life Safety~~ Nonstructural performance level (N-B ~~C~~) ~~in Section 1.5.2.3~~ of ASCE 41 at BSE-1N shall be considered equivalent to NPC 3/NPC 2 and NPC 3R requirements respectively of Table 11.1, Chapter 6 of the California Administrative Code. For NPC 3/NPC 3R /NPC 2, only components listed in Table 11.1, Chapter 6 of the California Administrative Code for NPC 3/NPC 3R/NPC 2 need to satisfy the requirements specified above.*

Exceptions:

1) Evaluation procedure ~~in~~ of Article 11, Chapter 6 of the California Administrative Code shall be used for seismic evaluation of NPC 2, NPC 3/NPC 3R, NPC 4 and NPC 5, where specific procedure is not outlined in ASCE 41. Administrative and permitting provisions outlined in Article 11, Chapter 6 of the California Administrative Code shall apply.

2) Supports and attachments ~~Anchorage and bracing~~ of nonstructural components, except those listed in item 4 below, in buildings in seismic performance categories SPC 1 and SPC 2 with a performance level of NPC 3R shall be permitted to comply with the provisions of Section 1630A of the 1995 California Building Code using an importance factor I_p=1.0. The capacity of welds, anchors and fasteners shall be determined in accordance with requirements of this Code.

3) Supports and attachments ~~Anchorage and bracing~~ of nonstructural components, except those listed in item 4 below, in buildings in seismic performance categories SPC 1 or SPC 2 with a performance level of NPC 3 or higher, and SPC 3, ~~or~~ SPC 4~~,~~ or SPC-4D, shall be permitted to comply with the provisions of Section 1630B of the 1998 California Building Code using an importance factor I_p=1.5. The capacity of welds, anchors and fasteners shall be determined in accordance with requirements of this code.

4) Supports and attachments for systems listed under NPC-2 and NPC-5 (excluding those specifically listed for NPC-3/NPC-3R and NPC-4) in the California Administrative Code, Chapter 6, Table 11.1 shall satisfy the requirements of this code for new construction and items 2 and 3 above shall not be applicable.

5) ~~A continuous load path of sufficient strength and stiffness between the component and the supporting structure shall be verified. Local elements of the supporting structure shall be verified for the component loads where they control the design of the elements or their connections. Increases in F_p due to anchorage conditions (for example shallow anchors) need not be considered.~~ For NPC 3R, the adequacy of load path for nonstructural elements need only be verified when the total reaction at the point of support (including the application of F_p) exceeds the following limits:

1. *250 pounds for components or equipment attached to light frame walls. For the purposes of this requirement, the sum of the absolute value of all reactions due to component loads on a single stud shall not exceed 250 pounds.*
2. *1,000 pounds for components or equipment attached to roofs, or walls of reinforced concrete or masonry construction.*
3. *2,000 pounds for components or equipment attached to floors or slabs-on-grade.*

Exception: *If the anchorage or bracing is configured in a manner that results in significant torsion on a supporting structural element, the effects of the nonstructural reaction force on the structural element shall be considered in the anchorage design.*

SECTION 3413A
MODIFICATIONS TO ASCE 41

3413A.1 GENERAL. *The text of ASCE 41 shall be modified as indicated in Sections 3413A.1.1 through 3413A.1.14. ~~3413A.1.32.~~*

3413A.1.1 ASCE 41 Section 1.1. *Modify ASCE 41 Section 1.1 with the following:*
Seismic evaluations shall be performed for performance objective specified in Section 3412A of this code (CBC) using procedure of this standard (ASCE 41) as follows: ~~and criteria of ASCE 41.~~

1. *Structural components shall be evaluated in accordance with Tier 3 systematic evaluations procedure in Chapter 6.*
2. *Nonstructural components shall be evaluated in accordance with Chapter 13.*

Exception: *~~except f~~ For general acute care hospitals, ~~which shall be evaluated per~~ seismic evaluation shall be permitted to be in accordance with Chapter 6 of the California Administrative Code (CAC) when required ~~per~~ by provisions of that chapter.*

3413A.1.2 ASCE 41 Section 2.4 ~~1.6~~ Seismic Hazard. *Modify ASCE 41 Section 2.4 ~~1.6 with~~ by the following:*

Response spectra and acceleration time histories shall be constructed in accordance with Sections 1613A, 1616A, and 1803A.6. ~~Basic Safety Earthquake 2 (BSE-2) in ASCE 41 shall be same as Maximum Considered Earthquake (MCE_R) in ASCE 7. Basic Safety Earthquake 1 (BSE-1) shall be 2/3rd of BSE-2.~~

~~3413A.1.29 ASCE 41 Chapter 10.~~ *~~Replace ASCE 41 Chapter 10 as follows:~~*
~~Simplified Rehabilitation.~~ *~~Not permitted by OSHPD.~~*

3413A.1.3 ~~3413A.1.3~~ ASCE 41 Section 6.2. ~~2.2.6.~~ *Modify ASCE 41 Section 6.2 ~~2.2.6~~ with the following:*

Data Collection Requirements. *The extent of data collection shall be at Comprehensive level for all structures, including structures upgraded to SPC-4D. ~~except that data collection at Usual level shall be permitted for structures with BSO or lower target performance objective.~~ A testing program for materials properties ~~testing program~~ shall be ~~pre-~~approved by the enforcement agent prior to commencement of material testing work. Previously approved material test results shall be permitted to be used to satisfy part of the comprehensive data collection requirements.*

Exception: *Data collection at Usual level shall be permitted for structures with SPC-2 or lower target performance objective.*

Tension testing of reinforcing bars shall be in accordance with ASTM A370 Annex A9. All test specimens shall be the full section of the bar as rolled (8-in. gage length) and shall not be reduced.

At test sample locations, structural members, slabs and walls shall be repaired to a state that is equivalent to their original condition. ~~at test sample locations.~~

For buildings built under an OSHPD permit based on the 1976 or later edition of the CBC, where materials properties are shown on design drawings and original materials test data are available, no materials testing shall be required when approved by the enforcement agent.

~~3413A.1.4 ASCE 41 Section 2.4.1.1.~~ *~~Modify ASCE 41 Section 2.4.1.1 with the following:~~*
~~1. If one or more component DCRs exceed 1.5 for the Immediate Occupancy Structural Performance Level (S-1) or 2.0 for the Life Safety Structural Performance level (S-3) and any irregularity described in Section 2.4.1.1.1 through 2.4.1.1.4 is present, then linear procedures~~

~~are not applicable and shall not be used.~~

~~2. Linear procedures are not applicable to moment resisting frames where plastic hinges do not form in either the beam at the face of column or in the column panel zone.~~

~~***3413A.1.7 ASCE 41 Section 3.2.10.1.*** *Modify ASCE 41 Section 3.2.10.1 with the Following:*~~

~~***Linear Procedures.*** *Equation 3-5 is not permitted by OSHPD.*~~

3413A.1.4 ~~***3413A.1.5***~~ ***ASCE 41 Section 7.3.2.1*** ~~***2.4.2.1***~~ *Modify ASCE 41 Section 7.3.2.1* ~~*2.4.2.1*~~ *with the following:*

Nonlinear Static Procedure. *If higher mode effects are significant and building is taller than 75 feet above the base, the Nonlinear Dynamic Procedure shall be used.*

~~***3413A.1.8 ASCE 41 Section 3.3.1.3.5.*** *Replace ASCE 41 Section 3.3.1.3.5 as follows:*~~
~~***Unreinforced Masonry Buildings.*** *Unreinforced Masonry not permitted by OSHPD.*~~

3413A.1.5 ~~***3413A.1.10***~~ ***ASCE 41 Section 7.5.1.*** ~~***3.4.2.2.***~~ *Modify ASCE 41 Section 7.5.1* ~~*3.4.2.2*~~ *with the following:*

Acceptance Criteria ~~***for Linear Procedures –***~~ ***Drift Limitations.*** *The interstory drift ratio shall not exceed the drift limits for Risk Category IV buildings in ASCE 7 Table 12.12-1 due to forces corresponding to BSE-1E or BSE-1N, as applicable.* ~~*, except that buildings designed to BSO or lower performance levels are permitted to meet the drift limits for Risk Category II buildings. For dual systems, the least interstory drift ratio shall control.*~~

> ***Exception:*** *Larger interstory drift ratios shall be permitted where justified by rational analysis that both structural and non-structural elements can tolerate such drift and approved by the enforcement agent.*

3413A.1.6 ~~***3413A.1.6***~~ ***ASCE 41 Section 7.5.1.4*** ~~***2.4.4.5.***~~ *Modify ASCE 41 Section 7.5.1.4* ~~*2.4.4.5*~~ *by the following:*

Material Properties. *Expected material properties are not permitted to be determined by multiplying lower bound values by the assumed factors specified in Chapters 8* ~~*5*~~ *through 12* ~~*8.*~~ *and shall be based exclusively on materials tests.*

~~***3413A.1.9 ASCE 41 Section 3.3.3.2.2*** *Modify ASCE 41 Section 3.3.3.2.2 with the following:*~~

~~***Simplified NSP Analysis.*** *Not permitted by OSHPD.*~~

~~***3413A.1.11*** *Reserved.*~~

~~***ASCE 41 Section 3.4.3.2.1.*** *Modify ASCE 41 Section 3.4.3.2.1 with the following:*~~

~~***Deformation-Controlled Actions.*** *For any building required to meet the Operational Building Performance level, 1-A or Immediate Occupancy Building Performance Level, 1-B, primary components shall be within the acceptance criteria for primary components and secondary components shall be within the acceptance criteria for secondary components.*~~

3413A.1.7 ~~***3413A.1.12***~~ ***ASCE 41 Section 8.4.*** ~~***4.4.***~~ *Modify ASCE 41 Section 8.4* ~~*4.4*~~ *with the followings:*

Foundation Strength and Stiffness. *Foundation and soil strength shall be used to evaluate potential overturning, uplift, and sliding for fixed base assumptions, and stiffness for flexible base assumptions, including deformations associated with those actions.*

~~***3413A.1.13 ASCE 41 Section 4.4.1.1.*** *Replace ASCE 41 Section 4.4.1.1 as follows:~~

~~***Presumptive Capacities.*** *Not permitted by OSHPD.~~

3413A.1.8 ~~***3413A.1.14***~~ ***ASCE 41 Section 8.4.1.1.*** ~~***4.4.1.2.***~~ *Replace ASCE 41 Section 8.4.1.1* ~~*4.4.1.2*~~ *as follows:*

Prescriptive Expected Capacities. *Not permitted by OSHPD.*

~~***3413A.1.15 ASCE 41 Section 4.4.3.2.2.*** *Modify ASCE 41 Section 4.4.3.2.2 with the following:~~

~~***Flexible Base Assumption.*** *The soil strength shall be evaluated.~~

3413A.1.9 ASCE 41 Section 8.5. *Modify ASCE 41 Section 8.5 with the following:*

The product of RRS_{bsa} x RRS_e, shall not be less than 0.7.

The combined effect of kinematic interaction and foundation damping shall meet the following:

1. *The site specific response spectrum modified for soil-structure interaction effects shall not be taken as less than 80 percent of the spectral acceleration as determined from a site-specific response spectrum in accordance with ASCE 7 Section 21.3, or*
2. *The site specific response spectrum modified for soil-structure interaction effects shall not be taken as less than 70 percent of the spectral acceleration as determined from the design response spectrum and MCE_R response spectrum in accordance and with ASCE 7 Sections 11.4.5 and 11.4.6 respectively.*
   Exception: *For the seismic retrofit of existing nonconforming buildings, design ground motion shall be consistent with performance objectives in Section 3412A.*

3413A.1.10 ~~***3413A.1.16***~~ ***ASCE 41 Section 8.6.*** ~~***4.5.***~~ *Modify ASCE 41 Section 8.6* ~~*4.5*~~ *with the following:*
Seismic Earth Pressure. *Where the grade difference from one side of the building to another exceeds one-half story height, the seismic increment of earth pressure shall be added to the gravity lateral earth pressure to evaluate the building overturning and sliding stability and the lateral force resisting system below grade in combination with the building seismic forces.*

~~***3413A.1.17 ASCE 41 Table 5.6.*** *Modify ASCE 41 Table 5.6 with the following:~~

~~***Acceptance Criteria for Nonlinear Procedures - Structural Steel Components.*** *For fully and partially restrained moment connections designed to 1989 or prior edition of the California Building Code shall be verified for the presence of welds using E70T-4 electrodes or other electrodes with equivalent aluminum content. Where E70T-4 or equivalent electrodes are present, the plastic rotation angles and residual strength ratios used shall be substantiated by the statistical analysis of three or more applicable cyclic test results subject to the approval of the enforcement agent.~~

3413A.1.11 ~~***3413A.1.18***~~ ***ASCE 41 Section 10.7.1.1.*** ~~***6.7.1.1.***~~ *Modify ASCE 41 Section 10.7.1.1* ~~*6.7.1.1*~~ *with the following:*

Monolithic Reinforced Concrete Shear Walls and Wall Segments. *For nonlinear procedures, shear walls or wall segments with axial loads greater than 0.35 P_o shall be included in the model as primary elements with appropriate strength and stiffness degrading properties assigned to those components subject to the approval of the enforcement agent. For linear procedures, the effects of deformation compatibility shall be investigated using moment-curvature section analyses and cyclic testing results of similar components to determine whether strengthening is necessary to maintain the gravity load carrying capacity of that component.*

Horizontal wall segments or spandrels reinforced similar to vertical wall segments or piers shall be classified as wall segments, not shear wall coupling beams, in Tables 10-19 ~~6-18~~ through ~~6-21~~ 10-22.

3413A.1.12 ASCE 41 Section 11.1. *Modify ASCE 41 Section 11.1 by the following:*

Scope: *Unreinforced Masonry walls (including unreinforced infill walls) and partitions are not permitted for General Acute Care (GAC) hospital buildings.*

~~***3413A.1.19 ASCE 41 Section 7.3.2.*** *Replace ASCE 41 Section 7.3.2 as follows:*~~

~~***Unreinforced Masonry Walls and Piers In-plane.*** *Not permitted by OSHPD.*~~

~~***3413A.1.20 ASCE 41 Section 7.3.3.*** *Replace ASCE 41 Section 7.3.3 as follows:*~~
~~***Unreinforced Masonry Walls Out-of-plane.*** *Not permitted by OSHPD.*~~

~~***3413A.1.21 ASCE 41 7.3.4.2.2. Shear Strength of Walls and Piers.*** *Modify ASCE 41 Section 7.3.4.2.2 with the following:*~~

~~*The spacing of shear reinforcing, S, shall be less than or equal to the wall pier clear height divided by 2 or the story height divided by 2, whichever is smaller.*~~

~~***3413A.1.22 ASCE 41 Section 9.2.4.*** *Modify ASCE 41 Section 9.2.4 with the following:*~~

~~***Linear Procedures.*** *Verification of the interstory lateral displacements, isolator displacements, the strength adequacy of the seismic force resisting system and isolation system, and anchorage to the foundation shall be accomplished using the Nonlinear Dynamic Procedure.*~~

~~***3413A.1.23 ASCE 41 Section 9.2.5.1.*** *Modify ASCE 41 Section 9.2.5.1 with the following:*~~

~~***Nonlinear Static Procedure.*** *Verification of the interstory lateral displacements, isolator displacements, the strength adequacy of the seismic force resisting system and isolation system, and anchorage to the foundation shall be accomplished using the Nonlinear Dynamic Procedure.*~~

3413A.1.13 ASCE 41 Section 14.1. *Modify ASCE 41 Section 14.1 by the following:*

Scope: *For buildings located in Seismic Design Category F, verification of the interstory lateral displacements, the strength adequacy of the seismic force resisting system and anchorage to the foundation shall be accomplished using the Nonlinear Dynamic Procedure.*

~~***3413A.1.26 ASCE 41 Section 9.3.4.*** *Modify ASCE 41 Section 14.3.4 9.3.4 with the following:*~~

~~***Linear Procedures.*** *Verification of the interstory lateral displacements, damper relative velocities and displacements, the strength adequacy of the seismic force resisting system and damping system, and anchorage to the foundation shall be accomplished using the Nonlinear Dynamic Procedure.*~~

~~***3413A.1.27 ASCE 41 Section 9.3.5.1.*** *Modify ASCE 41 Section 9.3.5.1 with the following:*~~
~~***Nonlinear Static Procedure.*** *Verification of the interstory lateral displacements, damper relative velocities and displacements, the strength adequacy of the seismic force resisting system and damping system, and anchorage to the foundation shall be accomplished using the Nonlinear Dynamic Procedure.*~~

~~***3413A.1.28*** *Reserved.*~~

~~***3413A.1.30 ASCE 41 Section 11.3.2.*** *Modify ASCE 41 Section 11.3.2 with the following:*~~

~~**Operational Nonstructural Performance Level (NPC- 5) Requirements.** All Structures shall meet Immediate Occupancy Nonstructural Performance Level (N-B) and facility shall have on-site supplies of water and holding tanks for sewage and liquid waste, sufficient to support 72 hours emergency operations, are integrated into the building plumbing systems in accordance with the California Plumbing code. An on-site emergency system as defined in the California Electrical Code is incorporated into the building electrical system for critical care areas. Additionally, the system shall provide for radiological service and an onsite fuel supply for 72 hours of acute care operation.~~

~~**3413A.1.31 ASCE 41 Section 11.9.4.3.1.** Modify ASCE 41 Section 11.9.4.3.1 with the following:~~

~~Ceilings in all Categories shall satisfy requirements for ceilings in Category C specified in this section.~~

~~**3413A.1.32 ASCE 41 Section 11.10.2.4.** Modify ASCE 41 Section 11.10.2.4 by the following:~~

~~For general acute care hospital, Nonstructural Evaluation shall comply with requirements of Section 11.2, Chapter 6 of the California Administrative Code.~~
3413A.1.14 ASCE 41 Chapter 15. Not permitted by OSHPD.

SECTION 3414A
PEER REVIEW REQUIREMENTS

3414A.1 General. *Independent peer review is an objective technical review by knowledgeable reviewer(s) experienced in structural design, analysis and performance issues involved. The reviewer(s) shall examine the available information on the condition of the building, basic engineering concept employed and recommendations for action.*

3414A.2 Timing of Independent Review. *The independent reviewer (s) shall be selected prior to initiation of substantial portion of the design and analysis work that is to be reviewed, and review shall start as soon as practical and sufficient information defining the project is available.*

3414A.3 Qualifications and Terms of Employment. *The reviewer shall be independent from the design and construction team.*

3414A.3.1 *The reviewer(s) shall have no other involvement in the project before, during or after the review, except in a review capacity.*

3414A.3.2 *The reviewer shall be selected and paid by owner and shall have technical expertise ~~in repair of buildings~~ similar to the project ~~one~~ being reviewed, as determined by enforcement agent.*

3414A.3.3 *The reviewer (in case of review team, the chair) shall be a California-licensed structural engineer who is familiar with technical issues and regulations governing the work to be reviewed.*

3414A.3.4 *The reviewer shall serve through completion of the project and shall not be terminated except for failure to perform the duties specified herein. Such termination shall be in writing with copies to enforcement agent, owner, and the engineer of record. When a reviewer is terminated or resigns, a qualified replacement shall be appointed within 10 working days or a timeframe mutually agreed to by the Owner, Registered Design Professional (RDP) and the Office.*

3414A.4 Scope of Review. *Review activities shall include, where appropriate, available construction documents, design criteria, observation of the condition of structure, all new and original inspection reports, including methods of sampling, analyses prepared by the engineer of record and consultants, and the retrofit or repair design. Review shall include consideration of the proposed design approach, method, materials and details.*

3414A.5 Reports. *The reviewer(s) shall prepare a written report to the owner and responsible enforcement agent that covers all aspect of the review performed including conclusions reached by the reviewer. Report shall be issued after the schematic phase, during design development, and at the completion of construction documents, but prior to their issuance of permit. Such report shall include, at the minimum, statement of the following:*

1. *Scope of engineering design peer review with limitations defined.*
2. *The status of the project documents at each review stage.*
3. *Ability of selected materials and framing systems to meet the performance criteria with given loads and configuration.*
4. *Degree of structural system redundancy and the deformation compatibility among structural and non-structural elements.*
5. *Basic constructability of the retrofit or repair system.*
6. *Other recommendation that will be appropriate for the specific project.*
7. *Presentation of the conclusions of the reviewer identifying any areas that need further review, investigation and / or clarification.*
8. *Recommendations.*

3414A.6 Responses and Corrective Actions. *The engineer of record shall review the report from the reviewer(s) and shall develop corrective actions and other responses as appropriate. Changes observed during construction that affect the seismic-resisting system shall be reported to the reviewer in writing for review and recommendations. All reports, responses and corrective actions prepared pursuant to this section shall be submitted to the responsible enforcement agent and the owner along with other plans, specifications and calculations required. If the reviewer resigns or is terminated by the owner prior to completion of the project, then the reviewer shall submit copies of all reports, notes, and the correspondence to the responsible enforcement agent, the owner, and the engineer of record within 10 working days of such termination.*

SECTION 3415A
EARTHQUAKE MONITORING INSTRUMENTS FOR EXISTING BUILDINGS

3415A.1 Earthquake recording instrumentation of existing buildings. *All owners of existing structures, selected by the enforcement agency for the installation of earthquake-recording instruments, shall provide space for the installation and access to such instruments. Location of said instruments shall be determined by the enforcement agency. The enforcement agency shall make arrangements to provide, maintain, and service the instruments. Data shall be the property of the enforcement agency, but copies of individual records shall be made available to the public on request and the payment of an appropriate fee.*

SECTION 3416A
COMPLIANCE ALTERNATIVES
FOR SERVICES/SYSTEMS AND UTILITIES

3416A.1 General. *The provisions of this section are intended to maintain or increase the current degree of public safety, health and general welfare in existing buildings while permitting repair, alteration, addition and change of occupancy without requiring full compliance with Chapters 2 through 33, or Sections 3401A.3, and 3403A through 3408A, except where compliance with other provisions of this code is specifically required in this section.*

Services/systems and utilities that originate in and pass through or under buildings and are necessary to the operation of the hospital buildings ~~an acute care hospital, skilled nursing facility, intermediate care facility, or correctional treatment center~~ shall meet the structural requirements of this section. Examples of services/systems and utilities include but are not limited to normal power; emergency power; nurse call; fire alarm; communication and data systems; space-heating systems; process load

systems; cooling systems; domestic hot and cold water systems; means of egress systems; fire-suppression systems; building drain and sewer systems; and medical gas systems that support basic and supplemental services.

After January 1, 2030, services/systems and utilities for acute care hospital buildings shall not originate in or pass through or under a non-hospital or Hospital building unless it has approved performance categories of SPC- 3 or higher and NPC-5.

3416A.1.1 Services/systems and utilities. *Services/systems and utilities that are necessary to the operation of the hospital buildings ~~an acute care hospital, skilled nursing facility, intermediate care facility, or correctional treatment center~~ shall meet the structural requirements of this section, based upon the approved Structural Performance Category (SPC) of the building receiving the services/systems and utilities.*

Services from a conforming building ~~an acute care hospital, skilled nursing facility, a correctional treatment center~~ shall be permitted to serve a nonconforming building with prior approval of the Office. The services/systems and utilities in the nonconforming building shall be equipped with fail safe valves, switches, or other equivalent devices that allow the nonconforming building to be isolated from the ~~acute care hospital buildings~~ conforming building.

Exception: *Remodel projects that use available existing services/systems and utilities are exempted from the requirements of this section. The enforcing agency shall be permitted to exempt minor addition, minor alteration, and minor remodel projects and projects to upgrade existing services/systems and utilities from the requirements of this section.*

3416A.1.1.1 Services/systems and utilities for hospital buildings.

3416A.1.1.1.1 New hospital buildings, additions, alterations, and remodels of conforming (SPC-3, -4, -4D, or -5) hospital buildings. *Services/systems and utilities for new hospital buildings and additions, alterations or remodels to existing conforming buildings shall originate in hospital buildings that are conforming or have approved performance categories of SPC-3 or higher, and NPC-4 or higher. The services/systems and utilities shall not pass through or under buildings that do not have approved performance categories of SPC-2 or higher and NPC-4 or higher.*

Exceptions:
Services/systems and utilities shall be permitted to pass through or under buildings that have approved nonstructural performance categories of NPC-3 or higher or NPC-2, provided that the building has an approved extension to the NPC-3 deadline. The services/systems and utilities feeding the new building addition, alteration, or remodel shall conform to the new building provisions of this code and shall be deemed by OSHPD to be free of adverse seismic interactions that could be caused by potential failure of overhead or adjacent components.

3416A.1.1.1.2 Additions, alterations, and remodels of SPC-2 hospital buildings. *Services/systems and utilities for additions, alterations, or remodels of SPC-2 hospital buildings shall be permitted to originate in and pass through or under SPC-2 or higher buildings that have an approved nonstructural performance category of NPC-3 or higher.*

Exception: *Services/systems and utilities shall be permitted to pass through or under buildings that have approved nonstructural performance categories of NPC-2, provided that the building has an approved extension to the NPC-3 deadline. Services/systems and utilities feeding the addition, alteration or remodel shall conform to the nonstructural bracing requirements for new buildings.*

3416A.1.1.1.3 Alterations and remodels of SPC-1 hospital buildings.

Services/systems and utilities for alterations or remodels of SPC-1 hospital buildings shall be permitted to originate in and pass through or under SPC-1 or higher buildings that have an approved nonstructural performance category of NPC-2 or higher.

3416A.1.1.1.4 Buildings without SPC/NPC ratings. *When services/systems and utilities for new buildings, additions, alterations, or remodels pass through or under hospital buildings which would not otherwise require evaluation for an SPC rating, such buildings shall be evaluated in accordance with the requirements of Section 1.3, Chapter 6, of the California Administrative Code, to determine the appropriate ratings, or shall be shown to meet the structural requirements of these regulations for new hospital buildings. The services/systems and utilities feeding the new building addition, alteration, or remodel shall conform with new building provisions of this code and shall be deemed by OSHPD to be free of adverse seismic interactions that could be caused by potential failure of overhead or adjacent components.*

3416A.1.1.1.5 Buildings removed from acute-care hospital service. *Services/systems and utilities for conforming acute care hospital buildings shall be permitted to pass through or under a building that has been removed from acute care hospital service until January 1, 2030 if the building removed from service meets the performance requirements of Section 3416A.1.1.1.1. Services/systems and utilities for nonconforming non-acute care hospital buildings shall be permitted to pass through or under a building that has been removed from acute care hospital service only if the building removed from service meets the performance requirements of Section 3416A.1.1.1.2.*

~~***3416A.1.1.2 Services/systems and utilities for skilled nursing facilities, intermediate care facilities and correctional treatment centers.***~~

~~***3416A.1.1.2.1 New buildings and additions.*** *Services/systems and utilities for new buildings and additions shall not originate in or pass through or under nonconforming structures.*~~

~~***Exception:*** *As an alternate to this section, skilled nursing and intermediate care facilities and correctional treatment centers shall be permitted to meet the requirements in Section 3416A.1.1.1 for hospital buildings.*~~

~~***3416A.1.1.2.2 Alterations and remodels.*** *Services/systems and utilities for alterations or remodels of existing buildings shall be permitted to pass through nonconforming structures, provided the new services/systems and utilities passing through the buildings are anchored and braced for seismic forces in accordance with these regulations for new buildings and are free of adverse seismic interactions caused by potential failure of overhead or adjacent components.*~~

3416A.1.2 Jurisdiction. *Services/systems and utilities ~~for Hospitals, skilled nursing facilities, and intermediate care facilities~~ shall originate in and only pass through or under buildings that are under the jurisdiction of the Office of Statewide Health Planning and Development (OSHPD).*

SECTION 3417A
COMPLIANCE ALTERNATIVES
FOR MEANS OF EGRESS

3417A.1 General. *Means of egress through existing buildings shall be in accordance with Chapter 10 except as modified in this section.*

3417A.1.1 Means of egress. ~~***for hospitals, skilled nursing facilities, intermediate care facilities, and. correctional treatment centers.***~~ *Means of egress ~~for acute care hospitals, skilled~~*

~~nursing facilities, intermediate care facilities, and correctional treatment centers~~ *shall comply with the requirements of Sections 3417A.1.1.1 and 3417A.1.1.2.*

Exception: *The enforcing agency shall be permitted to exempt minor additions, minor alterations and minor remodel projects from these requirements.*

3417A.1.1.1 Means of egress for hospital buildings. *Means of egress for hospital buildings shall comply with the requirements of Sections 3417A.1.1.1.1 through 3417A.1.1.1.6.*

3417A.1.1.1.1 New and existing conforming hospital buildings. *Means of egress for new hospital buildings and additions to existing conforming hospital buildings shall only pass through buildings that are conforming or comply with the requirements of SPC-3 or higher, and NPC-4 or higher.*

Exception: *Existing means of egress that pass through hospital buildings that have approved nonstructural performance categories NPC-3, or NPC-2, if the building has an approved extension to the NPC-3 deadline, shall be permitted to remain for the duration of extension. The nonstructural components in the path of egress shall be braced in accordance with the new building provisions of this code.*

3417A.1.1.1.2 Existing SPC-2 hospital buildings. *Means of egress for additions to existing SPC-2 hospital buildings shall only pass through hospital buildings that have approved performance categories of SPC-2 or higher and NPC-4 or higher.*

Exception: *The means of egress shall be permitted to pass through hospital buildings that have approved nonstructural performance categories of NPC-3, or NPC-2 if the building has an approved extension to the NPC-3 deadline. Nonstructural components in the path of egress shall be braced in accordance with the new building provisions of this code.*

3417A.1.1.1.3 Existing SPC-3 or higher hospital buildings. *Means of egress for remodels of existing SPC-3 or higher hospital buildings shall only pass through hospital buildings that have approved performance categories of SPC-2 or higher and NPC-4 or higher.*

Exception: *The means of egress shall be permitted to pass through hospital buildings that have approved nonstructural performance categories of NPC-3, or NPC-2 if the building has an approved extension to the NPC-3 deadline. Nonstructural components in the path of egress shall be braced in accordance with the new building provisions of this code.*

3417A.1.1.1.4 Existing SPC-1 hospital buildings. *Means of egress for remodels of existing SPC-1 hospital buildings shall only pass through hospital buildings that have approved performance categories of SPC-1 or higher and NPC-2 or higher.*

Exception: *Means of egress for acute care service spaces for hospitals licensed pursuant to subdivision (a) of Section 1250 of the Health and Safety Code shall comply with the requirements of Section 3417A.1.1.1.2.*

3417A.1.1.1.5 Other ~~non-conforming~~ hospital buildings. *Hospital buildings that would not otherwise require evaluation for an SPC rating, which are used as a part of the means of egress for ~~acute care~~ hospital buildings, shall be evaluated in accordance with the requirements of Section 1.3, Chapter 6, of the California Administrative Code to determine the appropriate rating, or shall meet the structural requirements of these regulations for conforming hospital buildings. Means of egress shall be in accordance with the requirements of Sections 3417A.1.1.1.1 through 3417A.1.1.1.4.*

3417A.1.1.1.6 Buildings removed from hospital service. *The means of egress for acute care hospitals shall be permitted to pass through buildings that are removed from hospital service only if the buildings remain under the jurisdiction of OSHPD, and only until January 1, 2030, subject to the following:*

1. *Egress for conforming hospital buildings shall be permitted to pass through buildings that have been removed from acute care hospital service that comply with the requirements of Section 3417A.1.1.1.1 or 3417A.1.1.1.3.*

2. *Egress for nonconforming hospital buildings shall be permitted to pass through buildings that have been removed from acute care hospital service that comply with the requirements of Section 3417A.1.1.1.2 or 3417A.1.1.1.4.*

After January 1, 2030, the means of egress for acute care hospital buildings shall only pass through hospital buildings that have approved performance categories of SPC-3 or higher and NPC-5.

~~***3417A.1.1.2 Means of egress for skilled nursing facilities, intermediate care facilities and correctional treatment centers.*** *Means of egress for skilled nursing facilities, intermediate care facilities, and correctional treatment centers shall comply with the requirements of Sections 3417.1.1.2.1 and 3417.1.1.2.2.*~~

~~***3417A.1.1.2.1 New facilities or additions to existing facilities.*** *Means of egress for new or additions to skilled nursing facilities, intermediate care facilities, or correctional treatment centers shall only pass through conforming buildings.*~~

~~***Exception:*** *As an alternate, skilled nursing facilities, intermediate care facilities, and correctional treatment centers shall be permitted to meet the egress requirements in Sections 3417A.1.1.1.1 through 3417A.1.1.1.5 for hospital buildings.*~~

3417A.1.2 Jurisdiction. *Means of egress ~~for Hospitals, skilled nursing facilities and intermediate care facilities,~~ shall only pass through buildings that are under the jurisdiction of the Office of Statewide Health Planning and Development (OSHPD).*

SECTION 3418A ~~[OSHPD 1]~~
REMOVAL OF HOSPITAL BUILDINGS FROM GENERAL ACUTE CARE SERVICES

3418A.1 General. *The requirements of this section shall apply when general acute care services are completely removed from SPC buildings or when buildings are removed from OSHPD jurisdiction. All buildings that remain under the OSHPD jurisdiction, after one or more SPC buildings are removed, shall satisfy the requirements of the California Building Standards Code. Approval of construction documents and a building permit are required for removal of SPC Buildings from general acute care services or removal of buildings from OSHPD jurisdiction.*

3418A.1.1 Buildings without approved extensions. *A SPC 1 hospital building without an approved delay in compliance requirements in accordance with the California Administrative Code (CAC) Chapter 6 Section 1.5.2 or past the extension date granted in accordance with the CAC Chapter 6 Section 1.5.2 shall not be issued a building permit until a project to remove the subject SPC 1 building from general acute care services has been approved, permitted, and closed in compliance by the Office.*

Exception: *Building permits for seismic compliance, maintenance and repair shall be permitted to be issued.*

3418A.2 Definitions. *The following words and terms are applicable to this section only:*

BUILDING. *The area included within surrounding exterior walls or any combination of exterior walls and fire walls (as described in Sections 202 and 706) exclusive of vent shafts and courts. Areas of the building not provided with surrounding walls shall be included in the building area if such areas are included within the horizontal projection of the roof or floor above. A building may consist of one or more adjacent SPC Buildings.*

GENERAL ACUTE CARE SERVICE. *Means basic and supplemental services, as defined in Section 1224.3, provided in a general acute care ~~hospital~~ building, as defined in Section 202 ~~1224.3~~ and the California Administrative Code, Chapter 6, Section 1.2.*

~~Relocated to Section 3402A~~ ~~***SPC SEISMIC SEPARATION.*** *Means a building separation in accordance with the California Administrative Code, Chapter 6 Section 3.4.*~~

STRUCTURAL SEPARATION. *Means a building separation in accordance with this code.*

3418A.3 Establishing eligibility for removal from general acute care service. *In order to establish that one or more SPC buildings are eligible for removal from general acute care service, the hospital owner shall submit construction documents showing that after the SPC Buildings are removed from general acute care service:*

1. *All basic acute care services or supplemental services on the hospital's license are provided in SPC buildings satisfying the requirements for SPC-2, SPC-3, SPC-4, SPC-4D, or SPC-5.*

   Exception: *If the hospital includes SPC-1 buildings that are not being removed from general acute care service, and these SPC-1 buildings have an approved extension to the SPC-2 deadline, basic acute care services or supplemental services on the hospital's license are permitted to remain in these SPC buildings for the duration of their extension or until these SPC-1 buildings are removed from general acute care service, whichever comes first.*

2. *All basic acute care services or supplemental services on the hospital's license are provided in SPC buildings satisfying the requirements for NPC-3, NPC-4, or NPC-5.*

   Exception: *Services shall be permitted to be located in SPC buildings satisfying the requirements of NPC-2 if the SPC buildings have an approved extension to NPC-3 deadline.*

3. *The hospital complies with all egress requirements, including occupant load, number of required exits and travel distance to exits, and provides evidence that no egress from any acute care hospital building passes through the SPC buildings removed from general acute care service, SPC-1 buildings, or through buildings not under OSHPD jurisdiction.*

   Exceptions:
   1. *If the SPC building has an approved extension to the SPC-2 deadline, existing egress through the SPC-1 building shall be permitted for the duration of the extension or until the SPC-1 Building is removed from general acute care service, whichever comes first.*
   2. *When permitted by Section 3417A.1.1.1.6.*

4. *No SPC building removed from general acute care service is used as a smoke compartment for any acute care hospital building. Buildings not under OSHPD jurisdiction shall not be used as a smoke compartment for any acute care hospital building.*

5. *Structural separation, fire barriers and fire walls shall satisfy the requirements of the California Building Standards Code.*

Exception: *An SPC seismic separation in accordance with the California Administrative Code Chapter 6 Section 3.4 shall be deemed to satisfy the building structural/seismic separation requirement in this section for SPC buildings that will remain under OSHPD jurisdiction.*

6. *If the SPC building removed from general acute care service shares a common fire alarm system with the acute care hospital, the main fire alarm control panel shall be located in an acute care hospital building. The SPC building removed from general acute care service shall be in a separate zone monitored by the main fire alarm control panel. Flexible connections shall be provided for conduits/conductors crossing structural or SPC seismic separation joints. If the intent is to place the SPC building under local jurisdiction, the building shall satisfy Section 3418A.5.1.*

   Exception: *Flexible connections for fire alarm conduits/conductors crossing seismic separation joints ~~and fail safe shut-off valves, and disconnects for utilities~~ between an SPC building removed from general acute care service and adjacent SPC-1 or SPC-2 buildings may be omitted, provided the fire alarm ~~and utilities~~ in the adjacent SPC-1 and SPC-2 buildings have no connection to any SPC-3, SPC-4, SPC-4D, and SPC-5 buildings providing general acute care service.*

7. *If the SPC building removed from general acute care service shares the fire sprinkler system with the acute care hospital, an isolation valve with a tamper switch shall be provided to isolate the portion of the system serving the SPC building removed from acute care service. Flexible connections shall be provided in piping that crosses structural or SPC seismic separation joints. The fire sprinkler system shall not originate in the SPC building removed from general acute care service. If the intent is to place the building under local jurisdiction, the building shall satisfy Section 3418A.5.1.*

   Exception: *Flexible connections for seismic separation joints and fail safe shut-off valves, and disconnects for utilities between an SPC building removed from general acute care service and adjacent SPC-1 or SPC-2 buildings may be omitted, provided utilities in the adjacent SPC-1 and SPC-2 buildings have no connection to any SPC-3, SPC-4, SPC-4D, and SPC-5 buildings providing general acute care service.*

8. *Patient access as required by Section 1224.4.7.5 does not pass through an SPC building removed from general acute care service or through buildings that are not under the jurisdiction of OSHPD.*

9. *The primary accessible entrance to the hospital is not through an SPC building removed from general acute care service or through buildings that are not under the jurisdiction of OSHPD.*

10. *No utilities servicing acute care hospital buildings originate in or pass through, over, or under, an SPC building removed from general acute care service, except as permitted by Section 3416A.1.1.1.5, or a building not under OSHPD jurisdiction.*

11. *If utilities originating in an acute care hospital building feed a SPC building removed from general acute care hospital service, fail safe shut-off valves and/or disconnects shall be provided that permit isolation of the SPC building removed from general acute care service from the hospital utilities. Flexible connections shall be provided for all utilities crossing structural or SPC seismic separation joints.*

    Exception: *Flexible connections for ~~fire alarm conduits/conductors crossing~~ seismic separation joints and fail safe shut-off valves, and disconnects for utilities between an SPC building removed from general acute care service and adjacent SPC-1 or SPC-2 buildings may be omitted, provided ~~the fire alarm and~~ utilities in the adjacent SPC-1*

and SPC-2 buildings have no connection to any SPC-3, SPC-4, SPC-4D, and SPC-5 buildings providing general acute care service.

3418A.4 Buildings intended to remain under OSHPD jurisdiction.

3418A.4.1 Qualifying non-acute care services. *In order for a freestanding building to remain under OSHPD jurisdiction that is removed from general acute care service, it shall contain one or more qualifying services. Qualifying services include:*

a. *Services considered "Outpatient Clinical Services" as defined in H&SC § 129730(a):*
   i. *Administrative space*
   ii. *Central sterile supply*
   iii. *Storage*
   iv. *Morgue and autopsy facilities*
   v. *Employee dressing rooms and lockers*
   vi. *Janitorial and housekeeping facilities*
   vii. *Laundry*
b. *Outpatient portions of the following services (with no more than 25 percent in-patient use), including but not limited to:*
   i. *Surgical*
   ii. *Chronic dialysis*
   iii. *Psychiatry*
   iv. *Rehabilitation, occupational therapy, or physical therapy*
   v. *Maternity*
   vi. *Dentistry*
   vii. *Chemical dependency*
c. *Services that duplicate Basic Services, as defined in H&SC §1250, or services that are provided as part of a Basic Service, but are not required for facility licensure (with no more than 25 percent in-patient use).*

All hospital support services listed in Section 3418A.4.1 Item a that are located in an SPC building at the time general acute care services are removed may remain, provided the California Department of Public Health certifies to the Office that it has received and approved a plan that demonstrates how the health facility will continue to provide all basic services in the event of any emergency when the SPC building may no longer remain functional. This certification shall be submitted by hospital to the Office prior to approval of the application to remove the SPC building from general acute care service.

3418A.4.2 Maintaining existing non-acute care services under existing license. *Existing approved non-acute care occupancies, or services, existing in the SPC building at the time it is removed from general acute care service shall be permitted to remain, and removal of the SPC building from general acute care service is not considered a change in occupancy. The enforcement agency shall be permitted to require evidence that the existing occupancies and services were in compliance at the time they were located in the SPC building. Any hospital support services located in the building removed from general acute care service, including administrative services, central sterile supply, storage, morgue and autopsy, employee dressing rooms and lockers, janitorial and housekeeping service, and laundry, shall be in excess of the minimum requirements for licensure and operation. Prior approval by the California Department of Public Health shall be obtained by hospital to maintain these services in the SPC building removed from acute care service.*

3418A.4.3 Change of licensed services under existing license. *A change of service or function for all, or a portion, of the SPC building removed from general acute care service requires compliance with the current requirements for that service, including accessibility requirements in accordance with Chapter 11B.*

3418A.4.3.1 Skilled nursing or acute psychiatric services. *When general acute care services are removed from an SPC building which is intended to be used for skilled nursing or acute psychiatric services, and the new services will be licensed under the existing license of*

the general acute care hospital these new services shall comply with Section 3416A.1.1.1.5 for a nonconforming hospital building.

3418A.4.3.1 ~~***3418A.4.3.2***~~ ***Outpatient clinical services.*** *When general acute care services are removed from an SPC building which is intended to be used for outpatient clinical services under the existing acute care hospital license, the building is required to comply with the current OSHPD 3 code requirements for the new service.*

3418A.4.4 SPC buildings removed from general acute care service with new license. *When general acute care services are removed from an SPC building, and new services provided in the SPC building are issued an initial license, as determined by the California Department of Public Health, as a skilled nursing facility or acute psychiatric hospital, the SPC building shall comply with the new building code requirements or equivalent provisions of the California Building Standards code at the time of application.*

3418A.4.5 Change of building occupancy or division. *When an SPC building is removed from general acute care service with or without change of license, the new occupancy group and division of the building, and/or new service or function, shall be established. A new certificate of occupancy shall be required for the building removed from general acute care service.*

3418A.5 Change in jurisdiction for buildings removed from general acute care service. *Except as provided by Section 3418A.5.3, at the hospital's discretion, a building removed from general acute care service shall be permitted to be placed under the jurisdiction of the local enforcement agency. To be eligible for a change in jurisdiction, the building removed from general acute care service shall satisfy the requirements of Section 3418A.5.1.*

3418A.5.1 Eligibility for change in jurisdiction. *For a building removed from general acute care service to be eligible for a change in jurisdiction to the local enforcing agency, all the following criteria shall be satisfied:*

a. *The building removed from general acute care service shall be freestanding, as defined in the California Administrative Code, Section 7-111.*

b. *Any hospital support services located in the building removed from general acute care service, including administrative services, central sterile supply, storage, morgue and autopsy, employee dressing rooms and lockers, janitorial and housekeeping service, and laundry, shall be in excess of the minimum requirements for licensure and operation. Prior approval by the California Department of Public Health shall be obtained by hospital to locate these services in the building removed from general acute care service.*

c. *Services/systems and utilities (e.g. power, emergency power, communication/data/nurse-call systems, space-heating systems, fire alarm system, fire-sprinkler system, medical gas & plumbing systems) shall be separate and independent from those serving any buildings under OSHPD jurisdiction.*

d. *If the building being transferred to the jurisdiction of the local enforcing agency is adjacent to a building under OSHPD jurisdiction and fire resistive construction separations are required, they shall be located in the building under OSHPD jurisdiction.*

3418A.5.2 Modification of buildings removed from OSHPD jurisdiction. *The owner of the building shall be responsible for bringing the building into compliance with all requirements of the new authority having jurisdiction. If a building requires modification to become eligible for removal from OSHPD jurisdiction, the construction project shall be closed with compliance by OSHPD prior to the change in jurisdiction. All occupancy separation, set-back, and allowable area requirements shall be enforced.*

3418A.5.3 Buildings not eligible for change in jurisdiction. *The following freestanding buildings shall remain under OSHPD jurisdiction:*

a. *Any building in which basic and/or supplementary services are provided for a general acute care hospital, acute psychiatric hospital, and general acute care hospital providing only acute medical rehabilitation center services.*

b. *Any building which provides required patient access, egress, or smoke compartment for a Building under OSHPD's jurisdiction.*

c. *Any building in which services under OSHPD jurisdiction are provided, including skilled nursing services, intermediate care services, acute psychiatric services, and distinct part skilled nursing or intermediate care services.*

d. *Any building providing central plant or utility services to a building under OSHPD jurisdiction.*

e. *Any building through which utilities pass through, over or under, to serve a building under OSHPD jurisdiction.*

3418A.6 Vacant space. *With the removal of general acute care services, the vacated space must be re-classified with an intended occupancy as required under Section 302. If the hospital determines that the building or space in the SPC building removed from general acute care service will be vacant, the hospital shall demonstrate that unsafe conditions as described in Section 116.1 are not created.*

3418A.7 Demolition: *Demolition of SPC buildings to be removed from general acute care services shall be permitted when buildings remaining under OSHPD's jurisdiction, after demolition, satisfy the requirements of the California Building Standards Code and demolition activity does not impair the operation and/or safety of any buildings that remain under the OSHPD's jurisdiction. Demolition shall be in accordance with Section 3303.*

SECTION 3419A [~~OSHPD 1~~]
HOSPITAL BUILDINGS REMOVED FROM GENERAL ACUTE CARE SERVICES

3419A.1 General. *The requirements of this section and Section 3418A shall apply to buildings removed from general acute care services that remain under OSHPD jurisdiction.*

3419A.2 Non-GAC buildings. *Non-GAC buildings shall conform to the requirements of Section 1.10.1.*

3419A.3 Freestanding buildings. *Application and enforcement of freestanding buildings removed from general acute care services but remaining under OSHPD jurisdiction shall be in accordance with Section 1.10.*

Freestanding hospital-owned clinics shall be permitted to be under the jurisdiction of OSHPD in accordance with the California Administrative Code Sections 7-2104, 7-2105, and 7-2106.

All existing amendments that are not revised above shall continue without any change.

NOTATION:
Authority: Health and Safety Code Section 130005(g) & 130021
Reference: Health and Safety Code Section 1275, 129790, 129850 & 130005(g)

CHAPTER 35
REFERENCED STANDARDS

This chapter lists the standards that are referenced in various sections of this document. The standards are listed herein by the promulgating agency of the standard, the standard identification, the

effective date and title, and the section or sections of this document that reference the standard. The application of the referenced standards shall be as specified in Section 102.4.

[OSHPD 1 & 4] Reference to other chapters. *In addition to the code sections referenced, the standards listed in this chapter are applicable to the respective code sections in Chapters 16A, 17A, 18A, 19A, 21A~~,~~ and 22A. ~~, and 34A.~~*

...

AAMA	American Architectural Manufacturing Association 1827 Waldon Office Square, Suite 550 Schaumburg, IL 60173	
Standard reference number	Title	Referenced in code section number
...		
501.4-09	*Recommended Static Test Method for Evaluating Curtain Wall and Storefront Systems Subjected to Seismic and Wind Induced Interstory Drifts*	*2410.1*
501.6-09	*Recommended Dynamic Test Method For Determining The Seismic Drift Causing Glass Fallout From A Wall*	*2410.1*

ACI	American Concrete Institute 38800 Country Club Drive Farmington Hills, MI 48333-9094	
Standard reference number	Title	Referenced in code section number
...		
318-14	Building Code Requirements for Structural Concrete	*Table 1705A.2.1, Table 1705A.3, ~~- 1705A.2.2.1.2,~~ 1810A.3.10.4, 1901.3.4.4 1903A, 1904A, 1905A, 1910A.5.4 ~~1913A.5, 1913A.7.2, 1913.2, 1913.3~~*
355.2-07	*Qualification of Post-Installed Mechanical Anchors in Concrete*	*1616A.1.19*
355.4-11	*Qualification of Post-Installed Adhesive Anchors in Concrete*	*1616A.1.19*
440.2R-08	*Guide for the Design and Construction of Externally Bonded FRP Systems for Strengthening Concrete Structures*	*1911A.3 ~~1914A.3~~*
...		
503.7-07	*Specification for Crack Repair by Epoxy Injection.*	*1911A.2 ~~1914A.2~~*
506-05	*Guide to Shotcrete*	*~~1913.4.5,~~ 1908A.1 ~~1910A.1~~, 1908A.3 ~~1910A.3,~~ 1908A.12 ~~1910A.12,~~1911A.2 ~~1914A.2~~*
530-13	Building Code Requirements for Masonry Structures	*2107A.5, 2107A.6*
...		

...

AISC	American Institute of Steel Construction Construction One East Wacker Drive, Suite 700 Chicago, IL 60601-2001	
Standard reference number	Title	Referenced in code section number
341-10	Seismic Provisions for Structural Steel Buildings	*1705A.2.1, 2212.2, 2205A, 2206A*
358- 10	*Prequalified Connections for Special and Intermediate Steel Moment Frames for Seismic Applications including Supplements No. 1 & 2*	*2212.3, 2205A, 2206A.2*
360-10	Specifications for Structural Steel Buildings	*1705A.2.1, Table 1705A.2.1, ~~2206A.2,~~ 2212.1.1, 2204A.4 ~~2204A.2.2~~, 2212A.1.2. 2212A.2.1*

AISI	American Iron and Steel Institute 1140 Connecticut Avenue, 705 Suite 705 Washington. DC 20036	
Standard reference number	Title	Referenced in code section number
S214-12	North American Standard for Cold-formed Steel Framing- Truss Design, 2012	*2211A.3, 2212.5.1.2*

ANSI	American National Standards Institute 25 West 43rd Street, Fourth Floor New York, NY 10036	
Standard reference number	Title	Referenced in code section number
A 190.1-12	Structural Glued Laminated Timber	*1705A.5.4*

...

APA	APA - Engineered Wood Association 7011 South 19th Tacoma, WA 98466	
Standard reference number	Title	Referenced in code section number
A 190.1-12	Structural Glued Laminated Timber	*1705A.5.4*

...

ASCE/SEI	American Society of Civil Engineers Structural Engineering Institute 1801 Alexander Bell Drive Reston, VA 20191-4400	
Standard reference number	Title	Referenced in code section number
5-13	Building Code Requirements for Masonry Structures	*2107A.5, 2107A.6*
...		
7-10	*Minimum Design Loads for Buildings and Other Structures including Supplement No. 1*	*104.11, 202, 1616.9, 1616.10,1603A.2 1613A, 1616A, 1803A.6, ~~1905A.1.21, 2114A.1,~~ 2114.13, 2210A.2, 2212A.2.4, 2410.1.1, 2410.1.2,*
...		
19- *10*	Structural Application of Steel Cables for Buildings	*2208A.1, ~~2207.1, 2207.2~~*
...		
24 - ~~13~~ 14	Flood Resistant Design and Construction	1203.4.2,1612.4, 1612A.4, 1612.5, 1612A.5, 2702.1.7, 3001.2
...		
41- ~~06~~ 13	*Seismic Evaluation and Retrofit ~~Rehabilitation~~ of Existing Buildings ~~including Supplement No. 1~~*	*1603A.2, 1616A.1.30, 3406A, 3412A, 3413A*
49- *12 ~~07~~*	Wind Tunnel Testing for Buildings and Other Structures	1609.1.1, *1609A.1.1*

...

ASTM	ASTM International 100 Barr Harbor Drive West Conshohocken, PA 19428-2959	
Standard reference number	Title	Referenced in code section number
...		
A 153/A 153M-09	Specification for Zinc Coating (Hot-dip) on Iron and Steel Hardware	*2304.10.1.1 ~~2304.9.1.1~~*
A370 – 13 ~~10~~	*Standard Test Methods and Definitions for Mechanical Testing of Steel Products*	*3413A.1.3*
...		
A 722/A722M-12	Specifications for Uncoated High-strength Steel Bar for Prestressing Concrete	*1812A.4.2 ~~J106.2.4.2~~, 1811A.4*
...		
A1064-13	*Standard Specification for Carbon steel wire and Welded Wire Reinforcement, Plain and Deformed, for Concrete*	*1903A.8*
...		
B 695-04 *(2009)*	Standard Specification for Coatings of Zinc Mechanically Deposited on Iron and Steel Strip for Building Construction	*2304.10.1.1~~2304.9.1.1~~*

...		
C90-14	*Standard Specification for Load Bearing Concrete Masonry Units*	*2105A.2*
C 94/C94M- *14a* ~~13~~	Specifications for Ready Mix Concrete	*1705A.3.3.1* ~~*1705A.3.3*~~
...		
C 150-12	Specification for Portland Cement	~~*1903A*~~, *1910A* ~~*1913A*~~, ~~*1916.1.2*~~
...		
C 270-*14a* ~~12a~~	Specifications for Mortar for Unit Masonry	~~*2114.2*~~ *2105A.3*
~~*C 289-07*~~	~~*Standard Test Method for Potential Alkali-Silica Reactivity of Aggregates*~~	~~*1903A.3*~~
...		
C 595-13	Specification for Blended Hydraulic Cement	~~*1903A.6,*~~ *1910A.1* ~~*1913A.1*~~
...		
C 618 – 12a ~~*08a*~~	*Standard Specification for Coal Fly Ash and Raw or Calcined Natural Pozzolan for Use in Concrete*	~~*1903A.3,*~~*1910A.1* ~~*1913A.1*~~, ~~*1913.2*~~
...		
C 635/C 635M-13*a*	Specification for the Manufacture, Performance, and Testing of Metal Suspension Systems for Acoustical Tile and Lay-in Panel ceilings	*1616.10.16,* *1616A.1.21* ~~*1616A.1.20*~~
C 636/C 636M - *13* ~~08~~	Practice for Installation of Metal Ceiling Suspension Systems for Acoustical Tile and Lay-in Panels	*1616.10.16,*~~*1616A.1.21*~~ ~~*1616A.1.20*~~
...		
C 989-13 ~~*09*~~	*Standard Specification for Slag Cement for Use in Concrete and Mortars*	~~*1903A.5, 1903A.6,*~~ *1910A.1* ~~*1913A.1, 1913.2*~~
...		
C 1019-*13* ~~11~~	Test Method of Sampling and Testing Grout	*2105A.3* ~~*2105A.2.2.1.4*~~, *2114.6.1* ~~*2114.9.1*~~
...		
C 1157/C 1157M-11	*ASTM Standard Performance Specification for Hydraulic Cement*	*1910A.1* ~~*1913A.1*~~,
...		
~~*C 1240-11*~~	~~*Standard Specification for Silica Fume Used in Cementitious Mixtures*~~	~~*1903A.6*~~
C 1249-06a(2010)	*Standard Guide for Secondary Seal for Sealed Insulated Glass Units for Structural Sealant Glazing Applications*	~~*1903A.6,*~~ *2410.1.1*
...		
~~*C 1260-07*~~	~~*Standard Test Method for Potential Alkali Reactivity of Aggregates (Mortar-Bar Method)*~~	~~*1903A.6, 2410.1.1*~~
...		
~~*C 1293-08b*~~	~~*Standard Test Method for Determination of Length Change of Concrete Due to Alkali-Silica Reaction*~~	~~*1903A.6, 1913.2.3*~~
...		
~~*C 1314-07*~~	~~*Test Method for Compressive Strength of Masonry Prisms*~~	~~*2114.9.1*~~
...		
C 1392-00(2014 ~~*2009*~~*)*	*Standard Guide for Evaluating Failure of Structural Sealant Glazing*	*2410.1.3*
C 1394-03 (2012 ~~*2008*~~*)*	*Standard Guide for In-Situ Structural Silicone Glazing Evaluation*	*2410.1.3*
...		

C 1401-~~1409a~~	Standard Guide for Structural Sealant Glazing	2410.1
. . .		
~~C1567 – 08~~	~~Standard Test Method for Determining the Potential Alkali-Silica Reactivity of the Combinations of Cementicious Materials and Aggregate (Accelerated Mortar-Bar Method)~~	~~1903A.6, 1913.2.3,~~
C1586-05 (2011)	Standard Guide for Quality Assurance of Mortars	~~2114.9.1,~~ 2105A.3 ~~2105A.2.2.1.4~~
. . .		
D 1586 –11	Standard Test Method for Standard Penetration Test (SPT) and Split-Barrel Sampling of Soils	~~J112.2~~ 1813A
. . .		
~~D 3441-05~~	~~Standard Test Method for Mechanical Cone Penetration Tests of Soil~~	~~J112.2~~
D 5778-12	Standard Test Method for Electronic Friction Cone and Piezocone Penetration Testing of Soils	1813A
. . .		
D 3966-07 (2013)	Standard Test Method for Piles Under Lateral Loads	1810A.3.3.2
. . .		
E 580- 14 ~~11b~~	Standard Practice for Installation of Ceiling Suspension Systems of Acoustical Tile and Lay-in Panels in Areas Subject to Earthquake Ground Motions	1616A.1.21 ~~1616A.1.20~~
. . .		
F 606-14	Standard Test Methods for Determining the Mechanical Properties of Externally and Internally Threaded Fasteners, Washers, Direct Tension Indicators, and Rivets	2213A.1
. . .		

. . .

AWC	American Wood Council 222 Catoctin SE, Suite 201 Leesburg, VA 20175	
Standard reference number	Title	Referenced in code section number
. . .		
ANSI/AWC NDS-2015	National Design Specifications (NDS) for Wood Construction with 2012 Supplement *and addendum*	1905A.1.8 ~~1905A.1.21~~...

. . .

AWPA	American Wood Products Association P.O. Box 361784 Birmingham. AL 35236-1784	
. . .		
U1-14	USE CATEGORY SYSTEM: User Specification for Treated Wood Except Section 6, Commodity Specification H	*1812A.2* ~~*...J106.2.2*~~

. . .

AWS	American Welding Society 550 N.W. LeJeune Road Miami, FL 33126	
Standard reference number	Title	Referenced in code section number
D1.1- 10	*Structural Welding Code-Steel*	*Table 1705A.2.1, 1705A.2.5* ~~*1705A.2.2.5*~~*, 2212.6.2, 2213A.2*
D1.3-08	Structural Welding Code-Sheet Steel	*Table 1705A.2.1, 1705A.2.5*
D1.4-11	Structural Welding Code – Reinforcing Steel	*Table 1705A.2.1,* ~~*1705.2.2.1.2, 2107A.3, 2107A.4*~~
D1.8-09	*Structural Welding Code – Seismic Supplement*	*1705A.2.5* ~~*1705A.2.2.5*~~
QC1-07 ~~*06*~~	*Standard for AWS Certification of Welding Inspectors*	*1705A.2.5* ~~*1705A.2.2.5*~~

. . .

FM	Factory Mutual Global Research Standards Laboratories Department 1301 Atwood Avenue, P.O. Box 7500 Johnston, RI 02919	
Standard reference number	Title	Referenced in code section number
ANSI/FM 1950-15 ~~*10*~~	*Approval Standard for Seismic Sway Braces for* ~~*Automatic Sprinkler Systems*~~ *Pipe, Tubing and Conduit*	*1705A.13.2* ~~*1705A.12.3*~~
. . .		

...

ICC	International Code Council, Inc. 500 New Jersey Ave, NW 6th Floor Washington, DC 20001	
Standard reference number	Title	Referenced in code section number
...		
*ICC-ES AC 01-~~12~~ 15**	*Acceptance criteria for expansion anchors in Masonry elements*	*1616A.1.19*
*ICC-ES AC 58-~~12~~ 15**	*Acceptance criteria for Adhesive anchors in Masonry elements*	*1616A.1.19*
*ICC-ES AC 70-~~12~~ 15**	*Acceptance criteria for fasteners power-driven into Concrete, Steel and Masonry elements*	*1616A.1.20 ~~1908A.1.1~~*
*ICC-ES AC 106-~~12~~ 15**	*Acceptance criteria for predrilled fasteners (screw anchors) in Masonry*	*1616A.1.19*
*ICC-ES AC 125-~~12~~ 15**	*Acceptance criteria for Concrete, and Reinforced and Unreinforced Masonry strengthening using externally bonded Fiber-Reinforced Polymer (FRP) composite systems.*	*1911A.3 ~~1914.3~~*
*ICC-ES AC 156-~~12~~ 15**	*Acceptance criteria for Seismic Certification by Shake-Table Testing of Nonstructural Components*	*1705A.13.3 ~~1705A.12.4~~*
*ICC-ES AC 178-~~12~~ 15**	*Acceptance criteria for inspection and verification of Concrete, and Reinforced and Unreinforced Masonry strengthening using Fiber-Reinforced Polymer (FRP) composite systems.*	*1911A.3 ~~1914A.3~~*
*ICC-ES AC 193-~~12~~ 15**	*Acceptance criteria for mechanical anchors in Concrete elements*	*1616A.1.19, ~~1909A.11~~*
*ICC-ES AC 232- 15**	*Acceptance criteria for anchor channels in Concrete elements*	*1616A.1.19, 1901.3.2*
*ICC-ES AC 308-~~12~~ 15**	*Acceptance criteria for post-installed adhesive anchors in Concrete elements*	*1616A.1.19, 1901.3.3*
*ICC-ES AC 358-~~12~~ 15**	*Acceptance criteria for Helical foundation systems and devices*	*1810A.3.1.5.1*
*ICC-ES AC 446- 15**	*Acceptance criteria for headed cast-in specialty inserts in Concrete*	*1616A.1.19, 1901.3.2*

** Refers to International Building Code, ~~2012~~ 2015 as a reference standard.*

...

ISO	International Organization for Standardization ISO Central Secretariat 1 ch, de la Voie-Creuse, Case Postale 56 CH-1211 Geneva 20, Switzerland	
Standard reference number	Title	Referenced in code section number
. . .		
ISO 9001-08	*Quality management systems - Requirements*	*1705A.13.3 ~~1705A.12.4~~*
ISO 17020-12	*Conformity assessment - Requirements for the operation of various types of bodies performing inspection*	*1704A.2*
ISO 17025-05	*General requirement for competence of testing and calibration laboratories*	*1703A.4 ~~1705A.12.4~~*

. . .

NFPA	National Fire Protection Association 1 Batterymarch Park Quincy, MA 02169-7471	
Standard reference number	Title	Referenced in code section number
. . .		
13-*16*	Installation of Sprinkler Systems	*~~1616.9.5, 1616.10.17~~*

. . .

PCI	Precast Prestressed Concrete Institute 200 West Adams Street, Suite 2100 Chicago, IL 60606-5230	
Standard reference number	Title	Referenced in code section number
. . .		
PCI 120-10	*PCI Design Handbook, 7th Edition*	*1905A.1.1, 1905A.1.2 ~~1905A.1~~*

PTI	Post-Tensioning Institute 8601 North Black Canyon Highway, Suite 103 Phoenix, AZ 85021	

Standard reference number	Title	Referenced in code section number
. . .		
PTI-2004	*Recommendations for Prestressed Rock and Soil Anchors (4th Edition)*	*1810A.3.10.4, 1811A.2, 1812A.4, 1812A.5,1813A.2* ~~*J106.2.4*~~, ~~*J106.2.5*~~
. . .		

. . .

TMS	The Masonry Society 3970 Broadway, Unit 201-D Boulder, CO 80304-1135	
Standard reference number	Title	Referenced in code section number
. . .		
402— 13	Building Code Requirements for Masonry Structures	*2107A.5, 2107A.6*
. . .		

. . .

UL	UL LLC 333 Pfingsten Road Northbrook, IL 60062-2096	
Standard reference number	Title	Referenced in code section number
. . .		
857— 13	Busways	*1705A.13.3.1*
. . .		

. . .

WCLIB	West Coast Lumber Inspection Bureau P. O. Box 23145 Portland, OR 97281	
Standard reference number	Title	Referenced in code section number
. . .		
AITC 111-05	*Recommended Practice for Protection of Structural Glued Laminated Timber During Transit, Storage and Erection*	*2303.1.3.1*
. . .		

AITC 117-10	Standard Specifications for Structural Glued Laminated Timber of Softwood Species	*2303.1.3.1*
...		
AITC 404-05	*Standard for Radially Reinforcing Curved Glued Laminated Timber Members to Resist Radial Tension*	*2303.1.3.1*

...

[All existing amendments that are not revised above shall continue without any change]

NOTATION:
Authority: Health and Safety Code Section 130005(g) & 130021
Reference: Health and Safety Code Section 1275, 129790, 129850 & 130005(g)

APPENDIX J
GRADING

[This Appendix is not adopted by OSHPD]

...

SECTION J104
PERMIT APPLICATION AND SUBMITTALS

...

J104.4 Liquefaction study. For sites with mapped maximum considered earthquake spectral response accelerations at short periods (S_s) greater than 0.5g as determined by Section 1613, a study of the liquefaction potential of the site shall be provided, and the recommendations incorporated in the plans.

Exception:

1. A liquefaction study is not required where the building official determines from established local data that the liquefaction potential is low.

~~2. [OSHPD 1, 2, & 4] Exception 1 not permitted by OSHPD.~~

...

SECTION J106
EXCAVATIONS

...

[Relocated to Chapter 18A] ~~***J106.2 Earth retaining shoring. [OSHPD 1 & 4]***~~

~~***J106.2.1 General.*** *The requirements of this section shall apply to temporary and permanent earth retaining shoring using soldier piles and lagging with or without tie-back anchors in soil or rock, only when existing or new OSHPD 1 or 4 facilities are affected. Shoring used as construction means and methods only, which does not affect existing or new OSHPD 1 or 4 facilities, are not regulated by OSHPD and shall satisfy the requirements of the authorities having jurisdiction. Design, construction, testing, and inspection shall satisfy the requirements of this code except as modified in Sections J106.2.2 through J106.2.8.*~~

~~***J106.2.2 Duration.*** *Shoring shall be considered temporary when elements of the shoring will be exposed to site conditions for a period of less than one (1) year, and shall be considered permanent otherwise. Permanent shoring shall account for the increase in lateral soil pressure due to earthquake. At the end of the construction period, the existing and new structures shall not rely on the temporary shoring for support in anyway. Wood components shall not be used for permanent shoring lasting more than two (2) years. Wood components of the temporary shoring*~~

~~that may affect the performance of permanent structure shall be removed after the shoring is no longer required.~~

~~All components of the shoring shall have corrosion protection or preservative treatment for their expected duration. Wood components of the temporary shoring that will not be removed shall be treated in accordance with AWPA U1 (Commodity Specification A, Use Category 4B and Section 5.2), and shall be identified in accordance with Section 2303.1.8.1.~~

~~**J106.2.3 Surcharge:** Surcharge pressure due to footings, traffic, or other sources shall be considered in design. If the footing surcharge is located within the semi-circular distribution or bulb of earth pressure (when shoring is located close to a footings), lagging shall be designed for lateral earth pressure due to footing surcharge. Soil arching effects may be considered in the design of lagging. Underpinning of the footing may be used in lieu of designing the shoring and lagging for surcharge pressure. Alternatively, continuously contacting drilled pier shafts near the footings shall be permitted. The lateral surcharge design pressure shall be derived using Boussinesq equations modified for the distribution of stresses in an elastic medium due to a uniform, concentrated or line surface load as appropriate and soil arching effects.~~

~~**J106.2.4 Design and testing:** Except for the modifications as set forth in Sections J106.2.4.1 and J106.2.4.2 below, all Prestressed Rock and Soil Tie-back Anchors shall be designed and tested in accordance with PTI Recommendations for Prestressed Rock and Soil Anchors (PTI-2004).~~

~~**J106.2.4.1 Geotechnical requirements:** The geotechnical report for the earth retaining shoring shall address the following:~~

1. ~~Minimum diameter and minimum spacing for the anchors including consideration of group effects.~~
2. ~~Maximum unbonded length and minimum bonded length of the tie-back anchors.~~
3. ~~Maximum recommended anchor tension capacity based upon the soil or rock strength / grout bond and anchor depth / spacing.~~
4. ~~Allowable bond stress at the ground / grout interface and applicable factor of safety for ultimate bond stress for the anchor. For permanent anchors, a minimum factor of safety of 2.0 shall be applied to ground soil interface as required by PTI-2004 Section 6.6.~~
5. ~~Minimum grout pressure for installation and post-grout pressure for the anchor. The presumptive post grout pressure of 300 psi may be used for all soil type.~~
6. ~~Class I Corrosion Protection is required for all permanent anchors. The geotechnical report shall specify the corrosion protection recommendations for temporary anchors.~~
7. ~~Performance test for the anchors shall be at a minimum of two (2) times the design loads and shall not exceed 80% of the specified minimum tensile strength of the anchor rod. A creep test is required for all prestressed anchors that are performance tested. All production anchors shall be tested at 150% of design loads and shall not be greater than 70% of the specified minimum tensile strength of the anchor rod.~~
8. ~~Earth pressure, surcharge pressure, and the seismic increment of earth pressure loading, when applicable.~~
9. ~~Maximum recommended lateral deformation at the top of the soldier pile, at the tie-back anchor locations, and the drilled pier concrete shafts at the lowest grade level.~~
10. ~~Allowable vertical soil bearing pressure, friction resistance, and lateral passive soil resistance for the drilled pier concrete shafts and associated factors of safety for these allowable capacities.~~
11. ~~Soil-pier shaft / pile interaction assumptions and lateral soil stiffness to be used in design for drilled pier concrete shaft or pile lateral loads.~~
12. ~~Acceptable drilling methods.~~
13. ~~Geotechnical observation and monitoring recommendations.~~

~~**J106.2.4.2 Structural requirements:**~~

1. ~~Tendons shall be thread-bar anchors conforming to ASTM A 722.~~
2. ~~Anchor design loads shall be based upon the load combinations in Section 1605A.3.1 and shall not exceed 60 percent of the specified minimum tensile strength of the tendons.~~
3. ~~The anchor shall be designed to fail in grout bond to the soil or rock before pullout of the soil wedge.~~
4. ~~Design of shoring system shall account for as-built locations of soil anchors considering all specified construction tolerances in Section J106.2.8.~~

~~5. Design of shoring system shall account for both short and long term deformation.~~

~~**J106.2.4.3 Testing of tie-back anchors:**~~

~~1. The geotechnical engineer shall keep a record at job site of all test loads, total anchor movement, and report their accuracy.~~

~~2. If a tie-back anchor initially fails the testing requirements, the anchor shall be permitted to be re-grouted and retested. If anchor continues to fail, the followings steps shall be taken:~~

~~a. The contractor shall determine the cause of failure – variations of the soil conditions, installation methods, materials, etc.~~

~~b. Contractor shall propose a solution to remedy the problem. The proposed solution will need to be reviewed and approved by geotechnical engineer, shoring design engineer, and the building official.~~

~~3. After a satisfactory test, each anchor shall be locked-off in accordance with Section 8.4 of PTI 2004.~~

~~4. The shoring design engineer shall specify design loads for each anchor.~~

~~**J106.2.5 Construction:** The construction procedure shall address the following:~~

~~1. Holes drilled for piles / tie-back anchors shall be done without detrimental loss of ground, sloughing or caving of materials and without endangering previously installed shoring members or existing foundations.~~

~~2. Drilling of earth anchor shafts for tie-backs shall occur when the drill bench reaches two to three feet below the level of the tie-back pockets.~~

~~3. Casing or other methods shall be used where necessary to prevent loss of ground and collapse of the hole.~~

~~4. The drill cuttings from earth anchor shaft shall be removed prior to anchor installation.~~

~~5. Unless tremie methods are used, all water and loose materials shall be removed from the holes prior to installing piles / tie-backs.~~

~~6. Tie-back anchor rods with attached centralizing devices shall be installed into the shaft or through the drill casing. Centralizing device shall not restrict movement of the grout.~~

~~7. After lagging installation, voids between lagging and soil shall be backfilled immediately to the full height of lagging.~~

~~8. The soldier piles shall be placed within specified tolerances in the drilled hole and braced against displacement during grouting. Fill shafts with concrete up to top of footing elevation, rest of the shaft can generally be filled with lean concrete. Excavation for lagging shall not be started until concrete has achieved sufficient strength for all anticipated loads as determined by the shoring design engineer.~~

~~9. Where boulders and / or cobbles have been identified in the geotechnical reports, contractor shall be prepared to address boulders and / or cobbles that may be encountered during the drilling of soldier piles and Tie-back anchors.~~

~~10. The grouting equipment shall produce grout free of lumps and indispensed cement. The grouting equipment shall be sized to enable the grout to be pumped in continuous operation. The mixer shall be capable of continuously agitating the grout.~~

~~11. The quantity of grout and grout pressure shall be recorded. The grout pressure shall be controlled to prevent excessive heave in soils or fracturing rock formations.~~

~~12. If post grouting is required, post grouting operation shall be performed after initial grout has set for 24 hours in the bond length only. Tie-backs shall be grouted over a sufficient length (anchor bond length) to transfer the maximum anchor force to the anchor grout.~~

~~13. Testing of anchors may be performed after post grouting operations provided grout has reached strength of 3,000 psi as required by PTI 2004 Section 6.11.~~

~~14. Anchor rods shall be tensioned straight and true. Excavation directly below the anchors shall not continue before those anchors are tested.~~

~~**J106.2.6 Inspection, survey monitoring, and observation**~~

~~1. The shoring design engineer or his designee shall make periodic inspections of the job site for the purpose of observing the installation of shoring system, testing of tie-back anchors, and monitoring of survey.~~

~~2. Testing, inspection, and observation shall be in accordance with testing, inspection and observation requirements approved by the building official. The following activities and materials shall be tested, inspected, or observed by the special inspector and~~

~~geotechnical engineer:~~

~~a. Sampling and testing of concrete in soldier pile and tie-back anchor shafts.~~

~~b. Fabrication of tie-back anchor pockets on soldier beams~~

~~c. Installation and testing of tie-back anchors.~~

~~d. Survey monitoring of soldier pile and tie-back load cells.~~

~~e. Survey Monitoring of existing buildings.~~

~~3. A complete and accurate record of all soldier pile locations, depths, concrete strengths, tie-back locations and lengths, tie-back grout strength, quantity of concrete per pile, quantity of grout per tie-back and applied tie-back loads shall be maintained by the special inspector and geotechnical engineer. The shoring design engineer shall be notified of any unusual conditions encountered during installation.~~

~~4. Calibration data for each test jack, pressure gauge, and master pressure gauge shall be verified by the special inspector and geotechnical engineer. The calibration tests shall be performed by an independent testing laboratory and within 120 calender days of the data submitted.~~

~~5. Monitoring points shall be established at the top and at the anchor heads of selected soldier piles and at intermediate intervals as considered appropriate by the geotechnical engineer.~~

~~6. Control points shall be established outside the area of influence of the shoring system to ensure the accuracy of the monitoring readings.~~

~~7. The periodic basis of shoring monitoring, as a minumum, shall be as follows:~~

~~a. Intitial monitoring shall be performed prior to any excavation.~~

~~b. Once excavation has begun, the periodic readings shall be taken weekly until excavation reaches the estimated subgrade elevation and the permanent foundation is complete.~~

~~c. If performance of the shoring is within established guidelines, shoring design engineer may permit the periodic readings to be bi-weekly. Once initiated, bi-weekly readings shall continue until the building slab at ground floor level is completed and capable of transmitting lateral loads to the permanent structure. Thereafter, readings can be monthly.~~

~~d. Where the building has been designed to resist lateral earth pressures, the periodic monitoring of the soldier piles and adjacent structure can be discontinued once the ground floor diaphragm and subterranean portion of the structure is capable of resisting lateral soil loads and approved by the shoring design engineer, geotechnical engineer, and the building official.~~

~~e. Additional readings shall be taken when requested by special inspector, shoring design engineer, geotechnical engineer, or the building official.~~

~~8. Monitoring reading shall be submitted to shoring design engineer, engineer in responsible charge, and the building official within 3 working days after they are conducted. Monitoring readings shall be accurate to within 0.01 feet. Results are to be submitted in tabular form showing at least the intial date of monitoring and reading, current monitoring date and reading and difference between the two readings.~~

~~9. If the total cummulative horizontal or vertical movement (from start of construction) of the existing buildings reaches ½" or soldier piles reaches 1" all excavation activities shall be suspended. The geotechnical and shoring design engineer shall determine the cause of movement, if any, and recommend corrective measures, if necessary, before excavation continues.~~

~~10. If the total cummulative horizontal or vertical movement (from start of construction) of the existing buildings reaches 3/4" or soldier piles reaches 1 ½" all excavation activities shall be suspended until the causes, if any, can be determined. Supplemental shoring shall be devised to eliminate further movement and the building official shall review and approve the supplemental shoring before excavation continues.~~

~~11. Monitoring of Tie-back Anchor Loads:~~

~~a. Load cells shall be installed at the tie-back heads adjacent to buildings at maximum interval of 50', with a minimum of one load cells per wall.~~

~~b. Load cell readings shall be taken once a day during excavation and once a week during the remainder of construction.~~

~~c. Load cell readings shall be submitted to the geotechnical engineer, shoring design engineer, engineer in responsible charge, and the building official.~~

~~d. Load cell readings can be terminated once the temporary shoring no longer provides support for the buildings.~~

~~**J106.2.7 Monitoring of existing OSHPD 1 and 4 structures**~~

~~1. The contractor shall complete a written and photographic log of all existing OSHPD 1 & 4 structures within 100 ft or three times depth of shoring, prior to construction. A licensed surveyor shall document all existing substantial cracks in adjacent existing structures.~~

~~2. Contractor shall document existing condition of wall cracks adjacent to shoring walls prior to start of construction.~~

~~3. Contractor shall monitor existing walls for movement or cracking that may result from adjacent shoring.~~

~~4. If excessive movement or visible cracking occurs, contractor shall stop work and shore / reinforce excavation and contact shoring design engineer and the building official.~~

~~5. Monitoring of the existing structure shall be at reasonable intervals as required by the registered design professional subject to approval of the building official. Monitoring shall be performed by a licensed surveyor and shall consist of vertical and lateral movement of the existing structures. Prior to starting shoring installation a pre-construction meeting shall take place between the contractor, shoring design engineer, surveyor, geotechnical engineer, and the building official to identify monitoring locations on existing buildings.~~

~~6. If in the opinion of the building official or shoring design engineer, monitoring data indicate excessive movement or other distress, all excavation shall cease until the geotechnical engineer and shoring design engineer investigates the situation and makes recommendations for remediation or continuing.~~

~~7. All reading and measurements shall be submitted to the building official and shoring design engineer.~~

~~**J106.2.8 Tolerances.** Following tolerances shall be specified on the construction documents.~~

~~1. Soldier Piles:~~

~~i. Horizontal and vertical construction tolerances for the soldier pile locations.~~

~~ii. Soldier pile plumbness requirements (angle with vertical line).~~

~~2. Tie-back Anchors:~~

~~i. Allowable deviation of anchor projected angle from specified vertical and horizontal design projected angle.~~

~~ii. Anchor clearance to the existing/new utilities and structures.~~

SECTION J107
FILLS

J107.1 General. Unless otherwise recommended in the soils report, fills shall conform to provisions of this section.

...

J107.5 Compaction. All fill material shall be compacted to 90 percent of maximum density as determined by ASTM D 1557, Modified Proctor, in lifts not exceeding 12 inches (305 mm) in depth.

~~**[OSHPD 1, 2, & 4]** This section establishes minimum requirements only.~~

...

~~Relocated to Chapter 18A~~ ~~**Section J112**~~
~~**Vibro-Stone Columns for Ground Improvement**~~

~~**J112.1 General. [OSHPD 1, 2, & 4]** This section shall apply to Vibro Stone Columns (VSCs) for ground improvement using unbounded aggregate materials. Vibro stone column provisions in this section are intended to increase bearing capacity, reduce settlements, and mitigate liquefaction for shallow foundations. These requirements shall not be used for grouted or bonded stone columns, ground improvement for deep foundation elements, or changing site class. VSCs shall not be considered as a deep foundation element.~~

~~Ground improvement shall be installed under the entire building/structure footprint and not under isolated foundation elements only.~~

~~Design, construction, testing, and inspection shall satisfy the requirements of this code except as modified in Sections J112.2 through J112.5.~~

~~**J112.2 Geotechnical Report.** Geotechnical report shall specify vibro stone column requirements to ensure uniformity in total and differential immediate settlement, long term settlement, and earthquake induced settlement.~~

1. ~~Soil compaction shall be sufficient to mitigate potential for liquefaction as described in California Geological Survey (CGS) Special Publication 117A (SP 117A): Guidelines for Evaluating and Mitigating Seismic Hazard in California.~~
2. ~~Area replacement ratio for the compaction elements and the basis of its determination shall be explained. Minimum factor of safety for soil compaction shall be in accordance with SP 117A.~~
3. ~~Depth of soil compaction elements and extent beyond the footprint of structures/foundation shall be defined. Extent beyond the foundation shall be half the depth of the VSCs with a minimum of 10' or an approved alternative.~~
4. ~~Minimum diameter and maximum spacing of soil compaction elements shall be specified. VSC's shall not be less than 2 feet in diameter and center to center spacing shall not exceed 8 feet.~~
5. ~~The modulus of subgrade reactions for shallow foundations shall account for the presence of compaction elements.~~
6. ~~The modulus of subgrade reactions, long-term settlement, and post earthquake settlement shall be specified along with expected total and differential settlements for design.~~
7. ~~The acceptance criteria for Cone Penetration Test (CPT) in accordance with ASTM D 3441 complemented by Standard Penetration Test (SPT) in accordance with ASTM D 1586, if necessary, to verify soil improvement shall be specified~~
8. ~~The requirements for special inspection and observation by the Geotechnical engineer shall be specified.~~
9. ~~A Final Verified Report (FVR) documenting the installation of the ground improvement system and confirming that the ground improvement acceptance criteria have been met shall be prepared by the Geotechnical Engineer and submitted to the enforcement agency for review and approval.~~

~~**J112.3 Shallow Foundations.** VSCs under the shallow foundation shall be located symmetrically around the centroid of the footing or load.~~

1. ~~There shall be a minimum of four stone columns under each isolated or continuous/combined footing or approved equivalent.~~
2. ~~The VSCs or deep foundation elements shall not be used to resist tension or overturning uplift from the shallow foundations.~~
3. ~~The foundation design for the shallow foundation shall consider the increased vertical stiffness of the VSCs as point supports for analysis, unless it is substantiated that the installation of the VSCs result in improvement of the surrounding soils such that the modulus of subgrade reaction, long term settlement, and post earthquake settlement can be considered uniform throughout.~~

~~**J112.4 Installation.** VSCs shall be installed with vibratory probes. Vertical columns of compacted unbounded aggregate shall be formed through the soils to be improved by adding gravel near the tip of the vibrator and progressively raising and re-penetrating the vibrator which will results in the gravel being pushed into the surrounding soil.~~

~~Gravel aggregate for VSCs shall be well graded with a maximum size of 6" and not more than 10% smaller than 3/8" after compaction.~~

~~**J112.5 Construction Documents.** Construction documents for VSCs, as a minimum, shall include the following:~~

~~1. Size, depth, and location of VSCs.~~
~~2. Extent of soil improvements along with building/structure foundation outlines.~~
~~3. Field verification requirements and acceptance criteria using CPT/SPT.~~
~~4. The locations where CPT/SPT shall be performed.~~
~~5. The Testing, Inspection and Observation (TIO) program shall indicate the inspection and observation required for the VSCs.~~

~~[OSHPD 3 not adopting Appendix J, since requirements are now covered in Chapter 18A]~~

NOTATION:
Authority: Health and Safety Code Section 129850
Reference: Health and Safety Code Sections 1275, 129850 and 129790

APPENDIX L
EARTHQUAKE RECORDING INSTRUMENTATION

SECTION L101
GENERAL

L101.1 General. Every structure located where the 1-second spectral response acceleration, S_1, in accordance with Section 1613.3 is greater than 0.40 that either 1 exceeds six stories in height with an aggregate floor area of 60,000 square feet (5574 m^2) or more, or 2 exceeds 10 stories in height regardless of floor area, shall be equipped with not less than three approved recording accelerographs. The accelerographs shall be interconnected for common start and common timing.

[OSHPD 1~~, 3,~~ & 4] There shall be a sufficient number of instruments to characterize the response of the building during an earthquake and shall include at least one tri-axial free field instrument or equivalent.

L101.2 Location. As a minimum, instruments shall be located at the lowest level, mid-height, and near the top of the structure. Each instrument shall be located so that access is maintained at all times and is unobstructed by room contents. A sign stating "MAINTAIN CLEAR ACCESS TO THIS INSTRUMENT" in 1-inch block letters shall be posted in a conspicuous location.

[OSHPD 1, ~~3,~~ & 4] A proposal for instrumentation and equipment specifications shall be forwarded to the enforcement agency for review and approval.

L101.3 Maintenance. Maintenance and service of the instrumentation shall be provided by the owner of the structure. Data produced by the instrument shall be made available to the building official on request.
Maintenance and service of the instruments shall be performed annually by an approved testing agency. The owner shall file with the building official a written report from an approved testing agency certifying that each instrument has been serviced and is in proper working condition. This report shall be submitted when the instruments are installed and annually thereafter. Each instrument shall have affixed to it an externally visible tag specifying the date of the last maintenance or service and the printed name and address of the testing agency.

[OSHPD 1] The Owner of the building shall be responsible for the implementation of the instrumentation program. Maintenance of the instrumentation and removal/processing of the records shall be the responsibility of the enforcement agency.

~~[All existing amendments are continued without any change]~~

NOTATION:
Authority: Health and Safety Code Section 129850
Reference: Health and Safety Code Sections 1275, 129850 and 129790

TABLE OF CONTENTS

DIVISION	AGENCY PROPOSAL #
I) 2015 INTERNATIONAL BUILDING CODE STATE AGENCY AMENDMENTS	
1. THE CALIFORNIA BUILDING STANDARDS COMMISSION	(BSC 05/15)
2. THE DIVISION OF THE STATE ARCHITECT – ACCESS COMPLIANCE	(DSA/AC 01/15)
3. THE DIVISION OF THE STATE ARCHITECT – STRUCTURAL SAFETY	(DSA/SS 02/15)
4. THE DEPARTMENT OF HOUSING AND COMMUNITY DEVELOPMENT-(NON-ACCESSIBILITY)	(HCD 03/15)
5. THE OFFICE OF STATE WIDE HEALTH PLANNING AND DEVELOPMENT – NON-STRUCTURAL	(OSHPD 02/15)
6. THE OFFICE OF STATE WIDE HEALTH PLANNING AND DEVELOPMENT - STRUCTURAL	(OSHPD 04/15)
7. THE OFFICE OF THE STATE FIRE MARSHAL	(SFM 06/15)
II) 2015 INTERNATIONAL EXISTING BUILDING CODE STATE AGENCY AMENDMENTS	
8. THE CALIFORNIA BUILDING STANDARDS COMMISSION	(BSC 06/15)
9. THE DIVISION OF THE STATE ARCHITECT – ACCESS COMPLIANCE	(DSA/AC 02/15)
10. THE DIVISION OF THE STATE ARCHITECT – STRUCTURAL SAFETY	(DSA/AC 03/15)
11. THE DEPARTMENT OF HOUSING AND COMMUNITY DEVELOPMENT-(NON-ACCESSIBILITY)	(HCD 04/15)
12. THE OFFICE OF THE STATE FIRE MARSHAL	(SFM 05/15)

Disclaimer: All Final Express Terms for the above mentioned agencies are available and were obtained from the Building Standards Commission at the following links:
http://www.bsc.ca.gov/Rulemaking/adoptcycle/2015CodeAdoptionCycle/ApprovedStandardsDecember2015.aspxhttp://www.bsc.ca.gov/Rulemaking/adoptcycle/2015CodeAdoptionCycle/ApprovedStandardsJanuary2016.aspx

FINAL EXPRESS TERMS
FOR
PROPOSED BUILDING STANDARDS
OF THE
OFFICE OF THE STATE FIRE MARSHAL

REGARDING PROPOSED CHANGES TO
2016 CALIFORNIA BUILDING CODE
CALIFORNIA CODE OF REGULATIONS, TITLE 24, PART 2

LEGEND FOR EXPRESS TERMS

1. Existing California amendments or code language being modified are in italics when they appear in the model code text: All such language appears in *italics*, modified language is underlined.
2. New California amendments: All such language appears *underlined and in italics*.
3. Repealed text: All such language appears in ~~strikeout~~.

FINAL EXPRESS TERMS

The Office of the State Fire Marshal (SFM) proposes to adopt the 2015 edition of the International Building Code (IBC) into the 2016 edition of the California Building Code (CBC). SFM further proposes to:

- Repeal the adoption by reference of the 2012 International Building Code and incorporate and adopt by reference in its place the 2015 International Building Code for application and effectiveness in the 2016 California Building Code.
- Repeal certain amendments to the 2012 International Building Code and/or California Building Standards not addressed by the model code that are no longer necessary.
- Adopt new building standards or necessary amendments to the 2015 International Building Code that address inadequacies of the 2015 International Building Code as they pertain to California laws.
- Bring forward previously existing California building standards or amendments, which represent no change in their effect from the 2013 California Building Code.
- Codify non-substantive editorial and formatting amendments from the format based upon the 2012 International Building Code to the format of the 2015 International Building Code.

NOTE OF EXPLANATION:

For the **2015 Triennial Code Adoption Cycle**, the Express Terms are displayed as follows:

****PART 1**** Includes the California Amendments SFM proposes to bring forward from the 2013 California Building Code **with changes** as shown, and also identifies the model code standards from the 2015 International Building Code SFM proposes for adoption into the 2016 California Building Code.

****PART 2**** Displays the standards SFM proposes to bring forward from the 2010 California Building Code **without change**, except for nonsubstantive editorial corrections, for adoption into the 2013 California Building Code; the text is provided for context and the convenience of the code user.

SUMMARY OF REGULATORY ACTION

SFM PROPOSES TO:

****PART 1****

1. Bring forward existing California Amendments from the 2013 California Building Code for adoption into the 2016 California Building Code **with amendment**.
2. Adopt standards from the 2015 International Building Code into the 2016 California Building Code **without amendment**.
3. Adopt standards from the 2015 International Building Code into the 2016 California Building Code **with amendment**.
4. Repeal 2013 California Amendments, which are **not** brought forward into the 2016 California Building Code.

****PART 2****

1. Bring forward existing California Amendments from the 2013 California Building Code for adoption into the 2016 California Building Code **without amendment**, except for editorial corrections.

PART 1

[1. The SFM is proposing to maintain the adoption of those existing California provisions contained Sections 1.1 Through 1.1.12 and Sections 1.11 through 1.11.10 with modification.]

See Item 46 for existing SFM amendments and California regulations that are brought forward without modification.

CHAPTER 1

SCOPE AND ADMINISTRATION

DIVISION I
CALIFORNIA ADMINISTRATION

SECTION 1.1
GENERAL

1.1.1 Title. *These regulations shall be known as the California Building Code, may be cited as such and will be referred to herein as "this code." The California Building Code is Part 2 of ~~twelve~~thirteen parts of the official compilation and publication of the adoption, amendment, and repeal of building regulations to the California Code of Regulations, Title 24, also referred to as the California Building Standards Code. This part incorporates by adoption the ~~2012~~2015 International Building Code of the International Code Council with necessary California amendments.*

1.1.3.2 State-Regulated Buildings, Structures, and Applications. *The model code, state amendments to the model code, and/or state amendments where there are no relevant model code provisions~~,~~ shall apply to the following buildings, structures, and applications regulated by state agencies as specified in Sections 1.2 through 1.14, except where modified by local ordinance pursuant to Section 1.1.8. When adopted by a state agency, the provisions of this code shall be enforced by the appropriate enforcing agency, but only to the extent of authority granted to such agency by the state legislature.*

Note: *See Preface to distinguish the model code provisions from the California provisions.*

1. State-owned buildings, including buildings constructed by the Trustees of the California State University, and to the extent permitted by California laws, buildings designed and constructed by the Regents of the University of California, and regulated by the Building Standards Commission. See Section 1.2 for additional scope provisions.
2. Local detention facilities regulated by the Board of State and Community Corrections ~~Corrections Standards Authority~~. See Section 1.3 for additional scope provisions.
3. Barbering, cosmetology or electrolysis establishments, acupuncture offices, pharmacies, veterinary facilities, and structural pest control locations regulated by the Department of Consumer Affairs. See Section 1.4 for additional scope provisions.
4. ~~Energy efficiency standards regulated by the~~ Section 1.5 reserved for the California Energy Commission. ~~See Section 1.5 for additional scope provisions.~~
5. Dairies and places of meat inspection regulated by the Department of Food and Agriculture. See Section 1.6 for additional scope provisions.
6. Organized camps, laboratory animal quarters, public swimming pools, radiation protection, commissaries serving mobile food preparation vehicles and wild animal quarantine facilities regulated by the Department of Public Health. See Section 1.7 for additional scope provisions.
7. Hotels, motels, lodging houses, ~~apartment houses~~ apartments, dwellings, dormitories, condominiums, shelters for homeless persons, congregate residences, employee housing, factory-built housing and other types of dwellings

containing sleeping accommodations with or without common toilets or cooking facilities. See Section 1.8.2.1.1 for additional scope provisions.
8. Accommodations for persons with disabilities in buildings containing newly constructed covered multifamily dwellings, new common use spaces serving existing covered multifamily dwellings, additions to existing buildings where the addition alone meets the definition of "COVERED MULTIFAMILY DWELLINGS," and new common-use ~~spaces~~ areas serving new covered multifamily dwellings which are regulated by the Department of Housing and Community Development. See Section 1.8.2.1.2 for additional scope provisions.
9. Permanent buildings and permanent accessory buildings or structures constructed within mobilehome parks and special occupancy parks regulated by the Department of Housing and Community Development. See Section 1.8.2.1.3 for additional scope provisions.
10. Reserved for the Division of the State Architect – Access Compliance.
11. Public elementary and secondary schools, community college buildings and state-owned or state leased essential service buildings regulated by the Division of the State Architect. See Section 1.9.2 for additional scope provisions.
12. Reserved for the State Historical Building Safety Board with the Division of the State Architect. See Section 1.9.2 for additional scope provisions.
13. General acute care hospitals, acute psychiatric hospitals, skilled nursing and/or intermediate care facilities, clinics licensed by the Department of Public Health and correctional treatment centers regulated by the Office of Statewide Health Planning and Development. See Section 1.10 for additional scope provisions.
14. Applications regulated by the Office of State Fire Marshal include but are not limited to the following in accordance with Section 1.11:

14.1. Buildings or structures used or intended for use as an:

1. Asylum, jail.
2. Mental hospital, hospital, home for the elderly, children's nursery, children's home or institution, school or any similar occupancy of any capacity.
3. Theater, dancehall, skating rink, auditorium, assembly hall, meeting hall, nightclub, fair building or similar place of assemblage where 50 or more persons may gather together in a building, room or structure for the purpose of amusement, entertainment, instruction, deliberation, worship, drinking or dining, awaiting transportation, or education.
4. Small family day care homes, large family day-care homes, residential facilities and residential facilities for the elderly, residential care facilities.
5. State institutions or other state-owned or state-occupied buildings.
6. High rise structures.
7. Motion picture production studios.
8. Organized camps.
9. Residential structures.

14.2. Tents, awnings or other fabric enclosures used in connection with any occupancy.
14.3. Fire alarm devices, equipment and systems in connection with any occupancy.
14.4. Hazardous materials, flammable and combustible liquids.
14.5. Public school automatic fire detection, alarm and sprinkler systems.
14.6. Wildland-urban interface fire areas.

15. Public libraries constructed and renovated using funds from the California Library Construction and Renovation Bond Act of 1988 and regulated by the State Librarian. See Section 1.12 for additional scope provisions.
16. Section 1.13 reserved for ~~Graywater systems regulated by~~ the Department of Water Resources. ~~See Section 1.13 for additional scope provisions.~~
17. For applications listed in Section 1.9.1 regulated by the Division of the State Architect – Access Compliance, outdoor environments and uses shall be classified according to accessibility uses described in Chapter 11A, 11B and 11C.
18. Marine Oil Terminals regulated by the California State Lands Commission. See Section 1.14 for additional scope provisions.

1.1.7.3 Conflicts. *When the requirements of this code conflict with the requirements of any other part of the California Building Standards Code, Title 24, the most restrictive requirements shall prevail.*

Exception: *Detached one-and two-family dwellings, efficiency dwelling units, lodging houses, live/work units, townhouses not more than three stories above grade plane with a separate means of egress, and their accessory*

structures, shall not be required to comply with the California Residential Code if constructed in accordance with the California Building Code.

1.1.8.1 Findings and filings.

1. The city, county, or city and county shall make express findings for each amendment, addition, or deletion based upon climatic, topographical, or geological conditions.

Exception: *Hazardous building ordinances and programs mitigating unreinforced masonry buildings.*

2. The city, county, or city and county shall file the amendments, additions, or deletions expressly marked and identified as to the applicable findings. Cities, counties, cities and counties, and fire departments shall file the amendments, additions, or deletions, and the findings with the California Building Standards Commission at 2525 Natomas Park Drive, Suite 130, Sacramento, CA 95833.
3. Findings prepared by fire protection districts shall be ratified by the local city, county, or city and county and filed with the California Department of Housing and Community Development, Division of Codes and Standards, P.O. Box 1407, Sacramento, CA 95812-1407 or ~~1800 3rd Street, Room 260, Sacramento, CA 95811~~ 2020 West El Camino Avenue, Suite 250, Sacramento, CA 95833-1829.

1.1.8.2 Locally adopted energy standards – California Energy Code, Part 6

In addition to the provisions of Section 1.1.8.1 of this Part, the provisions of this section apply to cities, counties, and city and county amending adopted energy standards affecting buildings and structures subject to the California Energy Code, Part 6.

Applicable provisions of Public Resources Code Section 25402.1 and applicable provisions of Chapter 10 of the California Administrative Code, Part 1 apply to local amendment of energy standards adopted by the California Energy Commission.

1.1.10 Availability of codes. *At least one complete copy each of Titles 8, 19, 20, 24, and 25 with all revisions shall be maintained in the office of the building official responsible for the administration and enforcement of this code. Each state department concerned and each city, county, or city and county shall have an up-to-date copy of the code available for public inspection, See Health and Safety Code Sections 18942(~~d~~ e)(1) and (2).*

Notation
Authority: Health and Safety Code Sections 1250, 1569.72, 1569.78, 1568.02, 1502, 1597.44, 1597.45, 1597.46, 1597.54, 1597.65, 13108, 13108.5, 13114, 13143, 13143.2, 13143.6, 13146, 13210, 13211, 17921, 18949.2, 25500 through 25545, Government Code Section 51189, Public Education Code 17074.50
Reference(s): Health and Safety Code Sections 13143, 13211, 18949.2, 25500 through 25545, Government Code Sections 51176, 51177, 51178 and 51179, Public Resources Code Sections 4201 through 4204

[2. The SFM proposes to only adopt Sections 105.2.1 – 105.2.2, 105.3 – 105.3.1, 105.4, 105.6 – 105.7, 106.1, 106.2 – 106.3, 107.1 – 107.3, 107.4, 107.5, 108.1 – 108.4, 110.1 – 110.3, 110.3.4 – 110.3.6, 110.3.8 – 110.3.10, 110.4 – 110.6, 111.1, 111.2, 111.3 – 111.4, 112, 114.1 – 114.2, 115 and 116 contained in Chapter 1.]

(IBC Chapter 1 Administrative provisions - Sections 101 through 114 relocated to Division II of Chapter 1.)
See Item 46 for existing SFM amendments and California regulations that are brought forward without modification.

DIVISION II
SCOPE AND ADMINISTRATION

Notation
Authority: Health and Safety Code Sections 1250, 1569.72, 1569.78, 1568.02, 1502, 1597.44, 1597.65, 13108, 13143, 13143.9, 13146, 13210, 13211, 17921, 18949.2
Reference(s): Health and Safety Code Sections 13143, 13211, 18949.2

[3. The SFM proposes to adopt Chapter 2 with the following amendments and California regulations.]

See Item 46 for existing SFM amendments and California regulations that are brought forward without modification.

CHAPTER 2
DEFINITIONS

~~***CONGREGATE LIVING HEALTH FACILITY (CLHF).*** *As termed, is a residential home with a capacity of no more than six beds, which provides inpatient care, including the following basic services: medical supervision, 24-hour skilled nursing and supportive care, pharmacy, dietary, social recreational, and at least provides services for persons who are diagnosed with a terminal illness or who are catastrophically and severely disabled.*~~

Congregate living health facility (CLHF). *means a residential home with a capacity, except as provided in paragraph (3), of no more than 12 beds, that provides inpatient care, including the following basic services: medical supervision, 24-hour skilled nursing and supportive care, pharmacy, dietary, social, recreational, and at least one type of service specified in paragraph (1). The primary need of congregate living health facility residents shall be for availability of skilled nursing care on a recurring, intermittent, extended, or continuous basis. This care is generally less intense than that provided in general acute care hospitals but more intense than that provided in skilled nursing facilities.*

(1) Congregate living health facilities shall provide one of the following services:
(A) Services for persons who are mentally alert, persons with physical disabilities, who may be ventilator dependent.
(B) Services for persons who have a diagnosis of terminal illness, a diagnosis of a life-threatening illness, or both. Terminal illness means the individual has a life expectancy of six months or less as stated in writing by his or her attending physician and surgeon. A "life-threatening illness" means the individual has an illness that can lead to a possibility of a termination of life within five years or less as stated in writing by his or her attending physician and surgeon.
(C) Services for persons who are catastrophically and severely disabled. A person who is catastrophically and severely disabled means a person whose origin of disability was acquired through trauma or nondegenerative neurologic illness, for whom it has been determined that active rehabilitation would be beneficial and to whom these services are being provided. Services offered by a congregate living health facility to a person who is catastrophically disabled shall include, but not be limited to, speech, physical, and occupational therapy.

(2) A congregate living health facility license shall specify which of the types of persons described in paragraph (1) to whom a facility is licensed to provide services.

(3)(A) A facility operated by a city and county for the purposes of delivering services under this section may have a capacity of 59 beds.
(B) A congregate living health facility not operated by a city and county servicing persons who are terminally ill, persons who have been diagnosed with a life-threatening illness, or both, that is located in a county with a population of 500,000 or more persons, or located in a county of the 16th class pursuant to Section 28020 of the Government Code, may have not more than 25 beds for the purpose of serving persons who are terminally ill.
(C) A congregate living health facility not operated by a city and county serving persons who are catastrophically and severely disabled, as defined in subparagraph (C) of paragraph (1) that is located in a county of 500,000 or more persons may have not more than 12 beds for the purpose of serving persons who are catastrophically and severely disabled.

(5) A congregate living health facility shall have a noninstitutional, homelike environment.

DIRECT ACCESS. A path of travel from a space to an immediately adjacent space through an opening in the common wall between the two spaces.

~~***DIRECT ACCESS.*** *A path of travel from a space to an immediately adjacent space through an opening in the common wall between the two spaces.*~~

FIREWORKS. Any composition or device for the purpose of producing a visible or an audible effect for entertainment purposes by combustion, deflagration or detonation that meets the definition of 1.4G fireworks or 1.3G fireworks. Fireworks, 1.4G. Small fireworks devices containing restricted amounts of pyrotechnic composition designed primarily to produce visible or audible effects by combustion. Such 1.4G fireworks which comply with the construction, chemical composition and labeling regulations of the DOTn for Fireworks, UN 0336, and the U.S. Consumer Product Safety Commission as set forth in CPSC 16 CFR Parts 1500 and 1507, are not explosive materials for the purpose of this code.

Fireworks, 1.3G. Large fireworks devices, which are explosive materials, intended for use in fireworks displays and designed to produce audible or visible effects by combustion, deflagration or detonation. Such 1.3G fireworks include, but are not limited to, firecrackers containing more than 130 milligrams (2 grains) of explosive composition, aerial shells containing more than 40 grams of pyrotechnic composition and other display pieces which exceed the limits for classification as 1.4G fireworks. Such 1.3G fireworks are also described as Fireworks, UN 0335 by the DOTn.

Note: *Fireworks shall have the same meaning as defined in Health and Safety Code Section 12511 which has been reprinted as follows:*

12511. "Fireworks" means any device containing chemical elements and chemical compounds capable of burning independently of the oxygen of the atmosphere and producing audible, visual, mechanical, or thermal effects which are useful as pyrotechnic devices or for entertainment.
The term "fireworks" includes, but is not limited to, devices designated by the manufacturer as fireworks, torpedoes, skyrockets, roman candles, rockets, Daygo bombs, sparklers, party poppers, paper caps, chasers, fountains, smoke sparks, aerial bombs, and fireworks kits.

12512. "Fireworks kit" means any assembly of materials or explosive substances, which is designed and intended by the seller to be assembled by the person receiving such material or explosive substance and when so assembled would come within the definition of fireworks in Section 12511.

HYDROGEN FUEL GAS ROOM. A room or space that is intended exclusively to house a gaseous hydrogen system.
~~**HYDROGEN *FUEL GAS* ROOM.** A room or space that is intended exclusively to house a gaseous hydrogen system.~~

~~***MENTALLY RETARDED PERSONS, PROFOUNDLY OR SEVERELY.*** *Shall mean any retarded person who is unable to evacuate a building unassisted during emergency conditions.*~~

~~***Note:*** *The determination as to such incapacity shall be made by the Director of the State Department of Public Health or his or her designated representative pursuant to Health and Safety Code Section 13131.3.*~~

PERSONS WITH INTELLECTUAL DISABILITIES, PROFOUNDLY OR SEVERELY. *Shall mean any persons with intellectual disabilities who is unable to evacuate a building unassisted during emergency conditions.*

Note: *The determination as to such incapacity shall be made by the Director of the State Department of Public Health or his or her designated representative pursuant to Health and Safety Code Section 13131.3.*

Notation
Authority: Health and Safety Code Sections 1250, 1569.72, 1569.78, 1568.02, 1502, 1597.44, 1597.65, 13108, 13143, 13143.9, 13146, 13210, 13211, 17921, 18949.2
Reference(s): Health and Safety Code Sections 13143, 13211, 18949.2

[4. The SFM proposes to adopt Chapter 3 with the following amendments and California regulations.]

See Item 46 for existing SFM amendments and California regulations that are brought forward without modification.

CHAPTER 3
USE AND OCCUPANCY CLASSIFICATIONS

304.1 Business Group B. Business Group B occupancy includes, among others, the use of a building or structure, or a portion thereof, for office, professional or service-type transactions, including storage of records and accounts. Business occupancies shall include, but not be limited to, the following:

Airport traffic control towers
Ambulatory care facilities *serving five or fewer patients (see Section ~~308.3.2~~308.4.2 for facilities serving more than five patients)*
Animal hospitals, kennels and pounds
Banks
Barber and beauty shops
Car wash
Civic administration
Clinic—outpatient *[SFM] (not classified as Group I-2.1)*
Dry cleaning and laundries: pick-up and delivery stations and self-service
Educational occupancies for students above the 12th grade
Electronic data processing
Food processing establishments and commercial kitchens not associated with restaurants, cafeterias and similar dining facilities not more than 2,500 square feet (232 m2) in area.
Laboratories: testing, ~~and~~ research *and [SFM] instruction*
Motor vehicle showrooms
Post offices
Print shops
Professional services (architects, attorneys, dentists, physicians, engineers, etc.)
Radio and television stations
Telephone exchanges
Training and skill development not in a school or academic program (this shall include, but not be limited to, tutoring centers, martial arts studios, gymnastics and similar uses regardless of the ages served, and where not classified as a Group A occupancy).
~~*Training and skill development not within a school or academic program(this shall include, but not be limited to, tutoring centers, martial arts studios, gymnastics, and similar uses regardless of the ages served, and where not classified as a Group A occupancy)*~~

305.2.1 Within places of religious worship. Rooms and spaces within places of religious worship providing such day care during religious functions shall be classified as part of the primary occupancy *where not licensed for day care purposes by the Department of Social Services*.

TABLE 307.1(1)
MAXIMUM ALLOWABLE QUANTITY PER CONTROL AREA OF HAZARDOUS MATERIALS POSING A PHYSICAL HAZARD[a, m, n, p]

MATERIAL	CLASS	GROUP WHEN THE MAXIMUM ALLOWABLE QUANTITY IS EXCEEDED	STORAGE[b]			USE-CLOSED SYSTEMS[b]			USE-OPEN SYSTEMS[b]	
			Solid pounds (cubic feet)	Liquid gallons (pounds)	Gas cubic feet at NTP	Solid pounds (cubic feet)	Liquid gallons (pounds)	Gas cubic feet at NTP	Solid pounds (cubic feet)	Liquid gallons (pounds)
Combustible dust	NA	H-2	See Note q	NA	NA	See Note q	NA	NA	See Note q	NA
Combustible fiber[q]	Loose Baled[o]	H-3	(100) (1,000)	NA	NA	(100) (1,000)	NA	NA	(20) (200)	NA
Combustible liquid[c, i]	II IIIA IIIB	H-2 or H-3 H-2 or H-3 NA	NA	120[d, e] 330[d, e] 13,200[e, f]	NA	NA	120[d] 330[d] 13,200[f]	NA	NA	30[d] 80[d] 3,300[f]
Consumer fireworks	1.4G	H-3	125[e, l]	NA	NA	NA	NA	NA	NA	NA
Cryogenic flammable	NA	H-2	NA	45[d]	NA	NA	45[d]	NA	NA	10[d]

Cryogenic inert	NA	NA	NA	NA	NL	NA	NA	NL	NA	NA
Cryogenic oxidizing	NA	H-3	NA	45[d]	NA	NA	45[d]	NA	NA	10[d]
Explosives	Division 1.1 Division 1.2 Division 1.3 Division 1.4 Division 1.4G Division 1.5 Division 1.6	H-1 H-1 H-1 or H-2 H-3 H-3 H-1 H-1	1[e,g] 1[e,g] ~~5~~10[e,g] 50[e,g] 125[d,e,l] 1[e,g] 1[e,g]	(1)[e,g] (1)[e,g] (~~5~~10)[e,g] (50)[e,g] NA (1)[e,g] NA	NA	0.25[g] 0.25[g] 1[g] 50[g] NA 0.25[g] NA	(0.25)[g] (0.25)[g] (1)[g] (50)[g] NA (0.25)[g] NA	NA	0.25[g] 0.25[g] 1[g] NA NA 0.25[g] NA	(0.25)[g] (0.25)[g] (1)[g] NA NA (0.25)[g] NA
Flammable gas	Gaseous Liquefied	H-2	NA	NA (150)[d,e]	1,000[d,e] NA	NA	NA (150)[d,e]	1,000[d,e] NA	NA	NA
Flammable liquid[c]	IA IB and IC	H-2 or H-3	NA	30[d,e] 120[d,e]	NA	NA	30[d] 120[d]	NA	NA	10[d] 30[d]
Flammable liquid, combination (IA, IB, IC)	NA	H-2 or H-3	NA	120[d,e,h]	NA	NA	120[d,h]	NA	NA	30[d,h]
Flammable solid	NA	H-3	125[d,e]	NA	NA	125[d]	NA	NA	25[d]	NA
Inert gas	Gaseous Liquefied	NA NA	NA NA	NA NA	NL NL	NA NA	NA NA	NL NL	NA NA	NA NA
Organic peroxide	UD I II III IV V	H-1 H-2 H-3 H-3 NA NA	1[e,g] 5[d,e] 50[d,e] 125[d,e] NL NL	(1)[e,g] (5)[d,e] (50)[d,e] (125)[d,e] NL NL	NA	0.25[g] 1[d] 50[d] 125[d] NL NL 0.25[g]	(0.25)[g] (1)[d] (50)[d] NL NL (0.25)[g]	NA NA	0.25[g] 1[d] 10[d] 25[d] NL NL 0.25[g]	(0.25)[g] (1)[d] (10)[d] NL NL (0.25)[g]
Oxidizer	4 3[k] 2 1	H-1 H-2 or H-3 H-3 NA	1[g] 10[d,e] 250[d,e] 4,000[e,f]	(1)[e,g] (10)[d,e] (250)[d,e] (4,000)[e,f]	NA	0.25[g] 2[d] 250[d] 4,000[f]	(0.25)[g] (2)[d] (250)[d] (4,000)[f]	NA	0.25[g] 2[d] 50[d] 1,000[f]	(0.25)[g] (2)[d] (50)[d] (1,000)[f]
Oxidizing gas	Gaseous Liquefied	H-3	NA	NA (150)[d,e]	1,500[d,e] NA	NA	NA (150)[d,e]	1,500[d,e] NA	NA	NA
Pyrophoric	NA	H-2	4[e,g]	(4)[e,g]	50[e,g]	1[g]	(1)[g]	10[e,g]	0	0
Unstable (reactive)	4 3 2 1	H-1 H-1 or H-2 H-3 NA	1[e,g] 5[d,e] 50[d,e] NL	(1)[e,g] (5)[d,e] (50)[d,e] NL	10[e,g] 50[d,e] 750[d,e] NL	0.25[g] 1[d] 50[d] NL	(0.25)[g] (1)[d] (50)[d] NL	2[e,g] 10[d,e] 750[d,e] NL	0.25[g] 1[d] 10[d] NL	(0.25)[g] (1)[d] (10)[d] NL
Water reactive	3 2 1	H-2 H-3 NA	5[d,e] 50[d,e] NL	(5)[d,e] (50)[d,e] NL	NA	5[d] 50[d] NL	(5)[d] (50)[d] NL	NA	1[d] 10[d] NL	(1)[d] (10)[d] NL

For SI: 1 cubic foot = 0.028 m3, 1 pound = 0.454 kg, 1 gallon = 3.785 L.
NL = Not Limited; NA = Not Applicable; UD = Unclassified Detonable.
a. For use of control areas, see Section 414.2.
b. The aggregate quantity in use and storage shall not exceed the quantity listed for storage.
c. The quantities of alcoholic beverages in retail and wholesale sales occupancies shall not be limited provided the liquids are packaged in individual containers not exceeding 1.3 gallons. In retail and wholesale sales occupancies, the quantities of medicines, foodstuffs or consumer products, and cosmetics containing not more than 50 percent by volume of water-miscible liquids with the remainder of the solutions not being flammable, shall not be limited, provided that such materials are packaged in individual containers not exceeding 1.3 gallons.
d. *[SFM] In other than Group L occupancies,* ~~M~~maximum allowable quantities shall be increased 100 percent in buildings equipped throughout with an automatic sprinkler system in accordance with Section 903.3.1.1. Where Note e also applies, the increase for both notes shall be applied accumulatively.

e. ~~*[SFM] In other than Group L occupancies,*~~ Maximum allowable quantities shall be increased 100 percent when stored in approved storage cabinets, day boxes, gas cabinets, gas rooms or exhausted enclosures or in listed safety cans in accordance with Section 5003.9.10 of the ~~International~~*California Fire Code*. Where Note d also applies, the increase for both notes shall be applied accumulatively.
f. Quantities shall not be limited in a building equipped throughout with an automatic sprinkler system in accordance with Section 903.3.1.1.
g. Allowed only in buildings equipped throughout with an automatic sprinkler system in accordance with Section 903.3.1.1.
h. Containing not more than the maximum allowable quantity per control area of Class IA, IB or IC flammable liquids.
i. The maximum allowable quantity shall not apply to fuel oil storage complying with Section 603.3.2 of the ~~International~~*California Fire Code*.
j. Quantities in parenthesis indicate quantity units in parenthesis at the head of each column.
k. A maximum quantity of 200 pounds of solid or 20 gallons of liquid Class 3 oxidizers is allowed when such materials are necessary for maintenance purposes, operation or sanitation of equipment when the storage containers and the manner of storage are approved.
l. Net weight of the pyrotechnic composition of the fireworks. Where the net weight of the pyrotechnic composition of the fireworks is not known, 25 percent of the gross weight of the fireworks, including packaging, shall be used.
m. For gallons of liquids, divide the amount in pounds by 10 in accordance with Section 5003.1.2 of the ~~International~~*California Fire Code*.
n. For storage and display quantities in Group M and storage quantities in Group S occupancies complying with Section 414.2.5, see Tables 414.2.5(1) and 414.2.5(2).
o. Densely packed baled cotton that complies with the packing requirements of ISO 8115 shall not be included in this material class.
p. The following shall not be included in determining the maximum allowable quantities:
1. Liquid or gaseous fuel in fuel tanks on vehicles.
2. Liquid or gaseous fuel in fuel tanks on motorized equipment operated in accordance with the ~~International~~*California Fire Code*.
3. Gaseous fuels in piping systems and fixed appliances regulated by the ~~International Fuel Gas Code~~ *California Mechanical Code*.
4. Liquid fuels in piping systems and fixed appliances regulated by the ~~International~~*California Mechanical Code*.
5. Alcohol-based hand rubs classified as Class I or II liquids in dispensers that are installed in accordance with Sections 5705.5 and 5705.5.1 of the ~~International~~*California Fire Code*. The location of the alcohol-based hand rub (ABHR) dispensers shall be provided in the construction documents.
q. Where manufactured, generated or used in such a manner that the concentration and conditions create a fire or explosion hazard based on information prepared in accordance with Section 414.1.3.

~~**308.4.1 Occupancy conditions.** Buildings of Group I-2 shall be classified as one of the occupancy conditions specified in Section 308.4.1.1 or 308.4.1.2.~~

~~**308.4.1.1 Condition 1.** This occupancy condition shall include facilities that provide nursing and medical care but do not provide emergency care, surgery, obstetrics or in-patient stabilization units for psychiatric or detoxification, including but not limited to nursing homes and foster care facilities.~~

~~**308.4.1.2 Condition 2.** This occupancy condition shall include facilities that provide nursing and medical care and could provide emergency care, surgery, obstetrics\ or in-patient stabilization units for psychiatric or detoxification, including but not limited to hospitals.~~

310.2 Definitions. The following terms are defined in Chapter 2:

~~***MENTALLY RETARDED PERSONS, PROFOUNDLY OR SEVERELY.***~~
~~**PERSONAL CARE SERVICE.**~~
PERSONS WITH INTELLECTUAL DISABILITIES, PROFOUNDLY OR SEVERELY

~~**310.6.1 Condition 1.** This occupancy Condition shall include buildings in which all persons receiving custodial care, without any assistance, are capable of responding to an emergency situation to complete building evacuation.~~

~~**310.6.2 Condition 2.** This occupancy Condition shall include buildings in which there are any persons receiving custodial care who require limited verbal or physical assistance while responding to an emergency situation to complete building evacuation.~~

Notation:
Authority: Health and Safety Code Sections 1250, 1569.72, 1569.78, 1568.02, 1502, 1597.44, 1597.65, 12081, 12552, 12553, 13108, 13143, 13143.9, 13146, 13210, 13211, 17921, 18949.2
References: Health and Safety Code Sections 12000 through 12401 and 12500 through 12725, 13108, 13143, 13211, 18949.2

[5. The SFM proposes to adopt Chapter 4 with the following amendments and California regulations.]

See Item 46 for existing SFM amendments and California regulations that are brought forward without modification.

CHAPTER 4
SPECIAL DETAILED REQUIREMENTS BASED ON USE AND OCCUPANCY

403.4.8.1 Equipment room. If the standby or emergency power system includes a generator set inside a building, the system shall be located in a separate room enclosed with 2-hour fire barriers constructed in accordance with Section 707 or horizontal assemblies constructed in accordance with Section 711, or both. System supervision with manual start and transfer features shall be provided at the fire command center.

Exception: In Group I-2~~, Condition 2,~~ manual start and transfer features for the critical branch of the emergency power are not required to be provided at the fire command center.

404.5 Smoke control. A smoke control system shall be installed in accordance with Section 909.

Exception: In other than Group I-2, and ~~Group I-1, Condition 2~~*R-2.1* smoke control is not required for atriums that connect only two stories.

406.3.1 Classification. Private garages and carports shall be classified as Group U occupancies. Each private garage shall be not greater than 1,000 square feet (93 m2) in area. Multiple private garages are permitted in a building where each private garage is separated from the other private garages by 1-hour fire barriers in accordance with Section 707, or 1-hour horizontal assemblies in accordance with Section 711, or both.

Exception: *The area of a private garage accessory to Group R-3 one- or two-family dwellings shall not be greater than 3,000 square feet in area.*

406.6.2 Ventilation. A mechanical ventilation system shall be provided in accordance with the ~~*International*~~*California Mechanical Code.*

Exception: *Mechanical ventilation shall not be required for enclosed parking garages that serve Group R-3 one- or two-family dwellings.*

407.3.1.1 Swing of corridor doors. *Corridor doors, other than those equipped with self-closing or automatic-closing devices shall not swing into the required width of corridors.*

Exception: In detention and/or secure mental health facilities, ~~D~~doors may swing into required width of corridors ~~in I-3 facilities~~ as long as 44" clear is maintained with any one door open 90 degrees and clear corridor widths required in Chapter 12 can be maintained with doors open 180 degrees.

407.4.1 Direct access to a corridor. Habitable rooms in Group I-2 *and I-2.1* occupancies shall have an exit access door leading directly to a corridor.

Exceptions:
~~1.~~ Rooms with exit doors opening directly to the outside at ground level.
~~2. Rooms arranged as care suites complying with Section 407.4.3~~

407.4.3 ~~**Projections in nursing home corridors**~~*Reserved*. ~~In Group I-2, Condition 1, occupancies, where the corridor width is a minimum of 96 inches (2440 mm), projections shall be permitted for furniture where all of the following criteria are met:~~
~~1. The furniture is attached to the floor or to the wall.~~
~~2. The furniture does not reduce the clear width of the corridor to less than 72 inches (1830 mm) except where other encroachments are permitted in accordance with Section 1005.7.~~
~~3. The furniture is positioned on only one side of the corridor.~~
~~4. Each arrangement of furniture is 50 square feet (4.6 m2) maximum in area.~~
~~5. Furniture arrangements are separated by 10 feet (3048 mm) minimum.~~
~~6. Placement of furniture is considered as part of the fire and safety plans in accordance with Section 1001.4.~~

407.10 Electrical systems. In Group I-2 *or I-2.1* occupancies, the essential electrical system for electrical components, equipment and systems shall be designed and constructed in accordance with the provisions of Chapter 27 and NFPA 99.

410.3.6 Scenery. Combustible materials used in sets and scenery ~~shall meet the fire propagation performance criteria of Test Method 1 or Test Method 2, as appropriate, of NFPA 701~~ *shall be flame resistant in accordance with the provisions set forth in CCR, Title 19, Division 1, Chapter 8*, in accordance with Section 806 and the ~~*International*~~*California* Fire Code. Foam plastics and materials containing foam plastics shall comply with Section 2603 and the ~~*International*~~*California* Fire Code.

SECTION 421
~~HYDROGEN *FUEL GAS* ROOMS~~ HYDROGEN FUEL GAS ROOMS

[Editorial Note: Remove existing amendments to Section 421.1 through 421.7. Model code now matches old CA amendments.]
421.1 General. When required by the ~~*International*~~*California* Fire Code, hydrogen fuel gas rooms shall be designed and constructed in accordance with Sections 421.1 through ~~421.7~~ 421.8.
~~**421.1 General.** When required by the *International California Fire Code*, hydrogen *fuel gas* rooms shall be designed and constructed in accordance with Sections 421.1 through 421.8.~~

421.2 Definitions. The following terms are defined in Chapter 2:
GASEOUS HYDROGEN SYSTEM
~~***HYDROGEN FUEL GAS ROOM.***~~
HYDROGEN FUEL GAS ROOM.

421.3 Location. Hydrogen fuel gas rooms shall not be located below grade.
~~**421.3 Location.** Hydrogen *fuel gas* rooms shall not be located below grade.~~

421.4 Design and construction. Hydrogen fuel gas rooms not classified as Group H shall be separated from other areas of the building in accordance with Section 509.1.
~~**421.4 Design and construction.** Hydrogen *fuel gas* rooms *not classified as Group H* shall be separated from other areas of the building *in accordance with Section 509.1*.~~

421.4.1 Pressure control. Hydrogen fuel gas rooms shall be provided with a ventilation system designed to maintain the room at a negative pressure in relation to surrounding rooms and spaces.
~~***421.4.1 Pressure control.*** *Hydrogen gas rooms shall be provided with a ventilation system designed to maintain the room at a negative pressure in relation to surrounding rooms and spaces.*~~

421.5 Exhaust ventilation. Hydrogen fuel gas rooms shall be provided with mechanical exhaust ventilation in accordance with the applicable provisions of Section 502.16.1 of the ~~*International*~~*California* Mechanical Code.
~~**421.5** ***Exhaust*** **Ventilation.** *Gas* rooms shall be provided with mechanical *exhaust* ventilation in accordance with the applicable provisions *of Section 502.16.1* of the *California Mechanical Code.*~~

421.6 Gas detection system. Hydrogen fuel gas rooms shall be provided with an approved flammable gas detection system in accordance with Sections 421.6.1 through 421.6.4.
~~**421.6 Gas detection system.** Hydrogen fuel *gas* rooms shall be provided with an approved flammable gas detection system in accordance with Sections 421.6.1 through *421.6.4*.~~

421.6.2 Gas detection system components. Gas detection system control units shall be listed and labeled in accordance with UL 864 or UL 2017. Gas detectors shall be listed and labeled in accordance with UL 2075 for use with the gases and vapors being detected.
~~***421.6.2 Gas detection system components.*** *Gas detection system control units shall be listed and labeled in accordance with UL 864 or UL 2017. Gas detectors shall be listed and labeled in accordance with UL 2075 for use with the gases and vapors being detected.*~~

421.6.3 Operation. Activation of the gas detection system shall result in all of the following:
1. Initiation of distinct audible and visual alarm signals both inside and outside of the hydrogen fuel gas room.
2. Activation of the mechanical exhaust ventilation system.
~~***421.6.3* Operation.** Activation of the gas detection system shall result in all of the following:~~
~~1. Initiation of distinct audible and visual alarm signals both inside and outside of the cutoff *fuel gas* room.~~
~~2. Activation of the mechanical *exhaust* ventilation system.~~

421.6.4 Failure of the gas detection system. Failure of the gas detection system shall result in activation of the mechanical exhaust ventilation system, cessation of hydrogen generation and the sounding of a trouble signal in an approved location.
~~***421.6.4* Failure of the gas detection system.** Failure of the gas detection system shall result in activation of the mechanical *exhaust* ventilation system, cessation of hydrogen generation and the sounding of a trouble signal in an approved location.~~

421.7 Explosion control. Explosion control shall be provided where required by Section 414.5.1.
~~**421.7 Explosion control.** Explosion control shall be provided *where required by Section 414.5.1.*~~

~~*425.8.4.2*~~*435.8.4.2 The minimum clear width of a corridor shall be as follows:*
1. Group R-2.1 occupancies shall have 60 inches (1524 mm) on floors housing nonambulatory clients and 44 inches (1118 mm) on floors housing only ambulatory clients.
2. Group R-4 occupancies shall have 44 inches (1118 mm) on floors housing clients.

Exceptions:
1. Corridors serving an occupant load of 10 or less shall not be less than 36 inches (914 mm) in width.
2. Corridors serving ambulatory persons only and having an occupant load of 49 or less shall not be less than 36 inches (914 mm) in width.
~~*3. Group R-4 occupancies shall have thirty-six inches (914 mm) on floors housing 10 or less clients.*~~

~~*425.8.7*~~*435.8.7* ***Floor separation.*** *Group R-3.1 occupancies with non-ambulatory clients housed above the first floor shall be provided with a non-fire resistance constructed floor separation at stairs which will prevent smoke migration between floors. Such floor separation shall have equivalent construction of 0.5 inch (12.7 mm) gypsum wallboard on one side of wall framing.*

Exceptions:
1. Occupancies with at least one exterior exit from floors occupied by clients.
2. Occupancies provided with automatic fire sprinkler systems complying with Chapter 9.

SECTION 434~~444~~
EXPLOSIVES [SFM]

[Section 444 have been repealed and replaced by the adoption of California Fire Code Chapter 56.]

~~***434.1 General construction requirements.*** *Magazines shall be constructed in conformity with the provisions of these regulations, or may be of substantially equivalent construction satisfactory to the enforcing agency having jurisdiction. Reasonable allowances shall be made for storage facilities in existence prior to the adoption of these regulations. No allowance, however, shall be made for storage facilities which constitute a distinct hazard to life and property.*~~

~~***434.2 Ventilation and weather resistance.*** *Magazines for the storage of explosives shall be sufficiently ventilated and weather resistant and when used for the storage of Class A explosives (other than black powder, blasting agents,*~~

~~*blasting caps and electric blasting caps), they shall also be of bullet-resistant construction unless deemed exempt by the enforcing agency having jurisdiction.*~~

~~***Note:*** *The recommendation for ventilation as contained in Pamphlet No. 1, Institute of Makers of Explosives, 1965 edition, is evidence of good practice.*~~

~~***434.3 Construction for separation between primers and flammable liquids.*** *Primers shall be separated from flammable liquids by a one-hour fire-resistive occupancy separation.*~~

~~***Exception:*** *A separation need not be provided for small arms ammunition primers when such primers are located a distance of not less than 25 feet (7620 mm) from flammable liquids.*~~

~~***434.4 Construction of Type I Magazine.*** *Type I magazines shall be of bullet-resistant construction. Plans shall be submitted to the enforcing agency having jurisdiction for approval prior to construction.*~~

~~***434.4.1 General.*** *Use of the following materials and methods of construction shall be evidence of compliance with this requirement:*~~

~~*1. Masonry units not less than 8 inches (203 mm) in thickness with all hollow spaces filled with weak cement, well-tamped sand, or equivalent material; or*~~
~~*2. Reinforced concrete not less than 6 inches (152 mm) in thickness; or*~~
~~*3. Steel walls of minimum No. 14 manufacturers. Standard gage (0.0747 inch) (1.9 mm) to No. 6 manufacturers. Standard gage (0.1943 inch) (4.9 mm) may be used, provided there are two layers spaced at least 6 inches (152 mm) apart with all hollow spaces filled with weak cement, well-tamped sand or equivalent material; or*~~
~~*4. One layer of No. 6 manufacturer's standard gage (0.1943 inch) (4.9 mm) or heavier; steel lined on the interior with a minimum of 4 inches (102 mm) of wood; or*~~
~~*5. Two layers of No. 6 manufacturer's standard gage (0.1943 inch) (4.9 mm) or heavier steel spaced a minimum 1/2 inch (12.7 mm) apart and lined on the interior with a minimum of 2 inches (51 mm) of wood; or*~~
~~*6. Two layers of wood, at least 2 inches (51 mm) nominal thickness each, spaced a minimum 4 inches (102 mm) apart with the hollow space filled with weak cement, well tamped sand or equivalent material.*~~
~~*7. Wood used shall conform to the following:*~~
~~*Wood shall be of tongue-and-grooved lumber or plywood. Wood shall be covered, on the exterior side, with metal to provide protection against flying embers and sparks.*~~

~~***434.4.2 Doors.*** *Doors shall be of bullet-resistant construction. Each door is to be equipped with:*~~

~~*1. Two mortise locks;*~~
~~*2. Two padlocks fastened in separate hasps and staples;*~~
~~*3. A combination of a mortise lock and a padlock;*~~
~~*4. A mortise lock that requires two keys to open; and*~~
~~*5. A three-point lock.*~~

~~*Padlocks must have at least five tumblers and a case-hardened shackle of at least 3/8 inch (9.5 mm) diameter. Padlocks must be protected with not less than 1/4 inch (6.4 mm) steel hoods constructed so as to prevent sawing or lever action on the locks, hasps and staples. These requirements do not apply to magazine doors that are adequately secured on the inside by means of a bolt, lock or bar that cannot be actuated from the outside.*~~

~~***434.4.3 Floors.*** *Floors of magazines shall be securely fastened in place and shall be capable of withstanding the loads imposed.*~~

~~***434.4.4 Roofs.*** *Roofs shall be securely fastened in place and they shall be bullet resistant, if required by the fire chief having jurisdiction.*~~

~~***434.4.5 Ventilation openings.*** *Ventilation openings shall be screened to prevent the entrance of sparks and they shall be protected in a manner that will maintain the bullet resistance of the magazine.*~~

~~***434.4.6 Interiors.*** *Magazine interiors shall be of a smooth finish without cracks or crevices with all nails, screws, bolts and nuts countersunk. Exposed metal capable of emitting sparks shall be covered so as not to come in contact with packages of explosives.*~~

~~**434.4.7 Location.** No Type I magazine, or portion thereof, shall be located under a high-voltage power line (750 volts or more). For the purposes of this section, "under" shall include an open space of not less than the height of the power line from the ground at right angles to the walls of the magazine.~~

~~**434.5 Buildings used for mixing of blasting agents.** Buildings used for the mixing of blasting agents shall conform to the requirements of Sections 434.5 and 434.6, unless otherwise specifically approved by the enforcing agency having jurisdiction.~~

~~**434.5.1 Construction.** Buildings shall be of all noncombustible construction or of sheet metal on wood studs.~~

~~**434.5.2 Separation.** The layout of the mixing building shall be such so as to provide physical separation between the finished product storage and the mixing and packaging operations.~~

~~**434.5.3 Storage areas.** Floors in storage areas and in the processing plant shall be of concrete or other noncombustible material. Isolated fuel storage shall be provided to avoid contact between molten ammonium nitrate and fuel in case of fire.~~

~~**434.5.4 Ventilation.** The building shall be well ventilated in accordance with Section 434.2.~~

~~**434.5.5 Heat.** Heat, if used, shall be provided exclusively from a unit outside of the building.~~

~~**434.5.6 Venting.** Explosion venting shall be provided when required by the enforcing agency having jurisdiction.~~

~~**434.6 Building construction storage.** Blasting agents may be stored in the manner set forth in Title 19, California Code of Regulations, Subchapter 10, Article 3, or in one-story warehouses (without basements), which shall be:~~

~~1. Of noncombustible or one-hour fire-resistive construction;~~
~~2. Constructed so as to eliminate floor drains and piping into which molten materials could flow and be confined in case of fire;~~
~~3. Weather resistant;~~
~~4. Well ventilated in accordance with Section ; 434.2 and~~
~~5. Equipped with a substantially constructed and lockable door which shall be kept securely locked, except when the facility is open for business.~~

~~**434.7 Electrical requirements for Type I magazines.** Magazines shall not be provided with either heat or light, except upon the approval of the enforcing agency having jurisdiction. Electrical installation, when permitted, shall be in accordance with the California Electrical Code for Type II, Division I locations.~~

~~**434.8 Mixing room blasting agents.** All electrical switches, controls, motors and lights, if located in the mixing room, shall be installed in accordance with the California Electrical Code for Type II, Division I locations.~~

~~**434.9 Storage of special effects materials.** The storage of not more than 750 pounds (340 kg) of special effects materials shall be in a building or a room conforming to the requirements of Group H, Division I Occupancies as defined in this part. In addition, the following shall apply to every special effects materials storage building or room:~~

~~1. The building shall be sprinklered as required in Chapter 9.~~

~~2. It shall be deemed that the storage of special effects materials creates an atmosphere of flammable dust.~~
~~3. Two or more permanent openings having an area of not less than 100 square inches (64 500 mm2) shall be located in the exterior wall to provide natural ventilation. These openings shall be protected by screens or louvers covered with 1/4 inch (6.4 mm) wire mesh screen.~~
~~4. Walls, floor ceiling, shelves and benches shall have a smooth nonmetallic surface which can be easily cleaned with a minimum of brushing or scrubbing.~~
~~5. Each entrance door shall be posted on the outside with signs stating, "Authorized Personnel Only" and "No Smoking."~~
~~6. Assembling and manufacturing are prohibited in special effects storage rooms or buildings.~~
~~7. The room shall be located above grade in a one-story building or on the top floor of a multistory building or may be a separate building.~~

~~8. The room or building shall have a minimum floor area of 80 square feet (7.4 m2) with no dimension less than 8 feet (2438 mm). 9. Electric wiring, lighting and heating shall be of a type approved for use in hazardous locations.~~

~~**434.10 Mixing room or building.** Buildings or rooms in which more than 50 pounds (22.7 kg) of special effects materials are present at any time shall be constructed with at least one wall of explosion-relief type. The relief wall should be placed so as to be of least hazard to persons in adjacent buildings.~~

~~**434.10.1 Explosive venting.** When explosive venting is required, the venting area will be calculated on 1 square foot (0.0929 m2) for each 35 cubic feet (0.99 m3) of building or roof area.~~

~~**434.10.2 Egress.** All rooms or buildings shall have adequate aisle space and at least two exits separated by a distance equal to at least one fifth the perimeter of the room. Openings in fire walls shall be equipped with approved, self-closing fire doors. All exit doors shall open outward and be equipped with approved panic hardware.~~

~~**Exception:** Cubicles 100 square feet (9.3 m2) or less and occupied by not more than two persons working within 12 feet (3658 mm) of an unobstructed passageway may have one exit.~~

~~**434.10.3 Room finishes.** Floors, walls, interior surfaces and equipment shall be of a finish and color that will indicate the presence of dust and spilled material. They shall be smooth finished for easy cleaning.~~

~~**434.10.4 HVAC.** Heating and cooling shall be by the indirect method using water, steam, electric heaters or other indirect methods. **Note:** Floor registers shall not be permitted.~~

~~**434.10.5 Electrical.** All electrical wiring and equipment shall be acceptable for the hazard involved and installed in accordance with Hazardous Locations, California Electrical Code.~~

~~**434.10.6 Grounding.** Effective bonding and grounding means shall be provided to prevent accumulation of static charges where static charges are a hazard, as set forth in the California Electrical Code.~~

~~**434.10.7 Pressure relief valves.** Hydraulic or air presses and hand jacks shall be provided with pressure relief valves so arranged and set that the material being processed will not be subjected to pressure likely to cause it to explode. Dies and plugged press equipment shall not be cleared by striking blows that may detonate or start the material burning.~~

~~**434.10.8 Dust control.** Dust from special effects materials shall not be exhausted to the atmosphere. Where vacuum dust collections systems are used, they shall comply with the following requirements:~~

~~1. Adequate filters must be installed between the source vacuum and the point of pickup to prevent explosive special effects materials from entering the vacuum pump or exhauster.~~
~~2. The dust collection system shall be designed to prevent pinch points threaded fittings exposed to the hazardous dust and sharp turns, dead ends, pockets, etc., in which special effects materials may lodge and accumulate outside the collecting chamber.~~
~~3. The entire vacuum collection system shall be made electrically continuous and be grounded to a maximum resistance of 5 ohms.~~
~~4. Chambers in which the dusts are collected shall not be located in the operating area unless adequate shields for the maximum quantity of material in the collector are furnished for personnel protection.~~
~~5. No more than two rooms may be serviced by a common connection to a vacuum collection chamber. Where interconnections are used, means should be employed to prevent propagation of an incident via the collection piping.~~
~~6. When collecting the more sensitive special effects materials, such as black powder, lead azide, etc., a "wet" collector which moistens the dust close to the point of intake and maintains the dust wet until removed for disposal shall be used. Wetting agents shall be compatible with the explosives.~~
~~7. Dusts shall be removed from the collection chamber as often as necessary to prevent overloading. The entire system shall be cleaned at a frequency that will eliminate hazardous concentrations of dusts in pipes, tubing and/or ducts.~~

~~**434.10.9 Fans.** Squirrel cage blowers should not be used for exhausting hazardous fumes, vapors or gases. Only nonferrous fan blades are permitted for fans located within the ductwork and through which hazardous materials are exhausted. Motors shall be located outside the duct.~~

~~***434.10.10 Work stations.*** *Work stations for small amounts of special effects materials [less than 1 pound (0.454 kg)] shall be separated by distance, barrier or other means, so fire in one station will not ignite material in the next work station. When necessary, each operator shall be protected by a personnel shield located between the operator and the material being processed. This shield and its support shall be a test design to withstand a blast from the maximum amount of special effects materials allowed behind it.*~~

~~***434.10.11 Shielding.*** *When shields or structures are needed to protect personnel, the following requirement shall be followed when specific weights of special effects materials in the amount of 1 pound (0.454 kg) or more are involved:*~~

~~***Weight of Explosive***~~	~~***Structure of Shield Wall***~~
~~*1-15 pounds (0.454-6.8 kg)*~~	~~*Shield wall constructed of concrete not less than 12 inches (305 mm) thick which is reinforced near both sides by rods not less than 1/2 inch (12.7 mm) in diameter located on maximum centers of 12 inches (305 mm) both horizontally and vertically. The rods must be staggered on opposite faces.*~~
~~*More than 15 pounds (6.8 kg)*~~	~~*The shield wall for the protection of workers must be designed in such a manner to protect against the efforts of not less than 25 percent overload above the expected maximum charge to be processed.*~~

~~***Notes:***~~
~~*1. One inch (25 mm) of mild steel is equivalent to 1 foot (305 mm) of reinforced concrete.*~~
~~*2. Explosives shall be located not less than 36 inches (914 mm) from the wall and 24 inches (610 mm) above the floor.*~~

~~*If this personnel protection wall for the required operation involving large quantities of special effects materials becomes so large that it is impractical, the operator must perform the operations by remote control or be protected by a suitably constructed shelter designed with a safety factor of not less than*~~

~~*4 to withstand the overpressure from the maximum amount of explosives in process.*~~

Notation:
Authority: Health and Safety Code Sections 1250, 1569.72, 1569.78, 1568.02, 1502, 1597.44, 1597.65, 12081, 12552, 12553, 13108, 13108, 13143, 13143.9, 13146, 13210, 13211, 17921, 18949.2
References: Health and Safety Code Sections 12000 through 12401 and 12500 through 12725, 13108, 13143, 13211, 18949.2

[6. The SFM proposes to adopt Chapter 5 without modification.]

See Item 46 for existing SFM amendments and California regulations that are brought forward without modification.

CHAPTER 5
GENERAL BUILDING HEIGHTS AND AREAS

Notation:
Authority: Health and Safety Code Sections 1250, 1569.72, 1569.78, 1568.02, 1502, 1597.44, 1597.65, 13108, 13143, 13143.9, 13146, 13210, 13211, 17921, 18949.2
References: Health and Safety Code Sections 13143, 13211, 18949.2

[7. The SFM proposes to adopt Chapter 6 without modification.]

See Item 46 for existing SFM amendments and California regulations that are brought forward without modification.

CHAPTER 6
TYPES OF CONSTRUCTION

Notation:
Authority: Health and Safety Code Sections 1250, 1569.72, 1569.78, 1568.02, 1502, 1597.44, 1597.65, 13108, 13143, 13143.9, 13146, 13210, 13211, 17921, 18949.2
References: Health and Safety Code Sections 13143, 13211, 18949.2

[8. The SFM proposes to adopt Chapter 7 with the following amendments and California regulations.]

See Item 46 for existing SFM amendments and California regulations that are brought forward without modification.

CHAPTER 7
FIRE-RESISTANCE-RATED CONSTRUCTION

708.1 General. The following wall assemblies shall comply with this section.

1. Separation walls as required by Section 420.2 for Groups ~~I-1,~~ R-1, R-2, *R-2.1,* and R-3.
2. Walls separating tenant spaces in covered and open mall buildings as required by Section 402.4.2.1.
3. Corridor walls as required by Section 1020.1.
4. Elevator lobby separation as required by Section 3006.2.
5. Egress balconies as required by Section 1019.2
6. *Walls separating enclosed tenant spaces in high-rise buildings and in buildings of Types I, IIA, IIIA, IV or VA construction of Group A, E, H, I, L and R-2.1 occupancies and other applications listed in Section 1.11 regulated by the Office of the State Fire Marshal.*

717.5.5 Smoke barriers. A listed smoke damper designed to resist the passage of smoke shall be provided at each point a duct or air transfer opening penetrates a smoke barrier. Smoke dampers and smoke damper actuation methods shall comply with Section 717.3.3.2.

Exceptions:
1. Smoke dampers are not required where the openings in ducts are limited to a single smoke compartment and the ducts are constructed of steel.
~~2. Smoke dampers are not required in smoke barriers required by Section 407.5 for Group I-2, Condition 2 - where the HVAC system is fully ducted in accordance with Section 603 of the *InternationalCalifornia Mechanical Code* and where buildings are equipped throughout with an automatic sprinkler system in accordance with Section 903.3.1.1 and equipped with quick-response sprinklers in accordance with Section 903.3.2.~~

Notation:
Authority: Health and Safety Code Sections 1250, 1569.72, 1569.78, 1568.02, 1502, 1597.44, 1597.65, 13108, 13143, 13143.9, 13146, 13210, 13211, 17921, 18949.2
References: Health and Safety Code Sections 13143, 13211, 18949.2

[9. The SFM proposes to maintain the adoption of SFM Chapter 7A the following amendments and California regulations.]

See Item 46 for existing SFM amendments and California regulations that are brought forward without modification.

CHAPTER 7A
MATERIALS AND CONSTRUCTION METHODS FOR EXTERIOR WILDFIRE EXPOSURE [SFM]

706A.2 Requirements. *Ventilation openings for enclosed attics, enclosed eave soffit spaces, enclosed rafter spaces formed where ceilings are applied directly to the underside of roof rafters, and underfloor ventilation openings shall be fully covered with metal wire mesh, vents, other materials, or other devices that meet one of the following requirements:*

1. Listed vents complying with ASTM E2886.

1.1 The Ember Intrusion Test shall have no flaming ignition of the cotton material.
1.2 There shall be no flaming ignition during the Integrity Test portion of the Flame Intrusion Test. The maximum temperature of the unexposed side of the vent shall not exceed 662°F (350°C).

2. Vents complying with all of the following:
2.1. The dimensions of the openings therein shall be a minimum of 1/16th inch (1.6 mm) and shall not exceed 1/8th inch (3.2 mm).
2.2. The materials used shall be noncombustible.

Exception: *Vents located under the roof covering, along the ridge of roofs, with the exposed surface of the vent covered by noncombustible wire mesh, may be of combustible materials.*

2.3. The materials used shall be corrosion resistant.

706A.3 Ventilation openings on the underside of eaves and cornices: *Vents shall not be installed on the underside of eaves and cornices.*

Exceptions:
1. Listed vents complying with ASTM E2886
1.1 The Ember Intrusion Test shall have no flaming ignition of the cotton material.
1.2 There shall be no flaming ignition during the Integrity Test portion of the Flame Intrusion Test. The maximum temperature of the unexposed side of the vent shall not exceed 662°F (350°C).

~~1.~~2. The enforcing agency may accept or approve special eave and cornice vents that resist the intrusion of flame and burning embers.
~~2.~~3. Vents complying with the requirements of Section 706A.2 may be installed on the underside of eaves and cornices in accordance with either one of the following conditions:
~~2.1.~~3.1 The attic space being ventilated is fully protected by an automatic sprinkler system installed in accordance with Section 903.3.1.1 of the California Building Code or,
~~2.2.~~3.2 The exterior wall covering and exposed underside of the eave are of noncombustible material, or ignition-resistant-materials as determined in accordance with SFM Standard 12-7A-5 Ignition-Resistant Material and the vent is located more than 12 feet from the ground or walking surface of a deck, porch, patio, or similar surface.

707A.5 Enclosed roof eaves and roof eave soffits. *The exposed underside of enclosed roof eaves having either a boxed-in roof eave soffit with a horizontal underside, or sloping rafter tails with an exterior covering applied to the underside of the rafter tails, shall be protected by one of the following:*

1. Noncombustible material
2. Ignition-resistant material
3. One layer of 5/8-inch Type X gypsum sheathing applied behind an exterior covering on the underside of the rafter tails or soffit
4. The exterior portion of a 1-hour fire resistive exterior wall assembly applied to the underside of the rafter tails or soffit including assemblies using the gypsum panel and sheathing products listed in the Gypsum Association Fire Resistance Design Manual
5. Boxed-in roof eave soffit assemblies with a horizontal underside that meet the performance criteria in accordance with the test procedures set forth in either of the following:
5.1 SFM Standard 12-7A-3; or
5.2 ASTM E2957

Exceptions: *The following materials do not require protection:*

1. Gable end overhangs and roof assembly projections beyond an exterior wall other than at the lower end of the rafter tails
2. Fascia and other architectural trim boards

707A.6 Exterior porch ceilings. *The exposed underside of exterior porch ceilings shall be protected by one of the following:*

1. Noncombustible material

2. Ignition-resistant material
3. One layer of 5/8-inch Type X gypsum sheathing applied behind the exterior covering on the underside of the ceiling
4. The exterior portion of a 1-hour fire resistive exterior wall assembly applied to the underside of the ceiling assembly including assemblies using the gypsum panel and sheathing products listed in the Gypsum Association Fire Resistance Design Manual
5. Porch ceiling assemblies with a horizontal underside that meet the performance criteria in accordance with the test procedures set forth in either of the following:
5.1 SFM Standard 12-7A-3; or
5.2 ASTM E2957

Exception: *Architectural trim boards.*

707A.7 Floor projections. *The exposed underside of a cantilevered floor projection where a floor assembly extends over an exterior wall shall be protected by one of the following:*

1. Noncombustible material
2. Ignition-resistant material
3. One layer of 5/8-inch Type X gypsum sheathing applied behind an exterior covering on the underside of the floor projection
4. The exterior portion of a 1-hour fire resistive exterior wall assembly applied to the underside of the floor projection including assemblies using the gypsum panel and sheathing products listed in the Gypsum Association Fire Resistance Design Manual
5. The underside of a floor projection assembly that meet the performance criteria in accordance with the test procedures set forth in either of the following:
5.1 SFM Standard 12-7A-3; or
5.2 ASTM E2957

Exception: *Architectural trim boards.*

707A.8 Underfloor protection. *The underfloor area of elevated or overhanging buildings shall be enclosed to grade in accordance with the requirements of this chapter or the underside of the exposed underfloor shall consist of one of the following:*

1. Noncombustible material
2. Ignition-resistant material
3. One layer of 5/8-inch Type X gypsum sheathing applied behind an exterior covering on the underside of the floor projection
4. The exterior portion of a 1-hour fire resistive exterior wall assembly applied to the underside of the floor including assemblies using the gypsum panel and sheathing products listed in the Gypsum Association Fire Resistance Design Manual
5. The underside of a floor assembly that meets the performance criteria in accordance with the test procedures set forth in either of the following:
5.1 SFM Standard 12-7A-3; or
5.2 ASTM E2957

Exception: *Heavy timber structural columns and beams do not require protection.*

707A.9 Underside of appendages. *When required by the enforcing agency the underside of overhanging appendages shall be enclosed to grade in accordance with the requirements of this chapter or the underside of the exposed underfloor shall consist of one of the following:*

1. Noncombustible material
2. Ignition-resistant material
3. One layer of 5/8-inch Type X gypsum sheathing applied behind an exterior covering on the underside of the floor projection
4. The exterior portion of a 1-hour fire resistive exterior wall assembly applied to the underside of the floor including assemblies using the gypsum panel and sheathing products listed in the Gypsum Association Fire Resistance Design Manual

5. The underside of a floor assembly that meets the performance criteria in accordance with the test procedures set forth in either of the following:
5.1 SFM Standard 12-7A-3; or
5.2 ASTM E2957

Exception: *Heavy timber structural columns and beams do not require protection.*

Notation:
Authority: Health and Safety Code Sections 13108, 13108.5, 13143, 13143.2, 13143.6, 13146, 17921, 18949.2, Government Code Section 51189
References: Health and Safety Code Sections 13143, 18949.2, Government Code Sections 51176, 51177, 51178, 51179, Public Resources Code Sections 4201 through 4204

[10. The SFM proposes to adopt Chapter 8 without modification.]

See Item 46 for existing SFM amendments and California regulations that are brought forward without modification.

CHAPTER 8
INTERIOR FINISHES

806.4 Acceptance criteria and reports. Where required to exhibit improved fire performance, curtains, draperies, fabric hangings and similar combustible decorative materials suspended from walls or ceilings shall be tested by an approved agency and ~~meet the flame propagation performance criteria of Test 1 or 2, as appropriate, of NFPA 701, or exhibit a maximum heat release rate of 100 kW when tested in accordance with NFPA 289, using the 20 kW ignition source~~ *shall be flame resistant in accordance with the provisions set forth in CCR, Title 19, Division 1, Chapter 8*. Reports of test results shall be prepared in accordance with the test method used and furnished to the building official upon request.

Notation:
Authority: Health and Safety Code Sections 1250, 1569.72, 1569.78, 1568.02, 1502, 1597.44, 1597.65, 13108, 13143, 13143.9, 13146, 13210, 13211, 17921, 18949.2
References: Health and Safety Code Sections 13143, 13211, 18949.2

[11. The SFM proposes to adopt Chapter 9 with the following amendments and California regulations.]

See Item 46 for existing SFM amendments and California regulations that are brought forward without modification.

CHAPTER 9
FIRE PROTECTION SYSTEMS

903.2.8 Group R. An automatic sprinkler system installed in accordance with Section 903.3 shall be provided throughout all buildings with a Group R fire area.

Exceptions:
1. Existing Group R-3 occupancies converted to Group R-3.1 occupancies not housing bedridden clients, not housing nonambulatory clients above the first floor and not housing clients above the second floor.
2. Existing Group R-3 occupancies converted to Group R-3.1 occupancies housing only one bedridden client and complying with Section ~~425.8.3.3~~435.8.3.3.
3. Pursuant to Health and Safety Code Section 13113 occupancies housing ambulatory children only, none of whom are mentally ill ~~or mentally retarded~~ children or children with intellectual disabilities, and the buildings or portions thereof in which such children are housed are not more than two stories in height, and buildings or portions thereof housing such children have an automatic fire alarm system activated by approved smoke detectors.

4. Pursuant to Health and Safety Code Section 13143.6 occupancies licensed for protective social care which house ambulatory clients only, none of whom is a child (under the age of 18 years), or who is elderly (65 years of age or over).

When not used ~~in accordance with Section 504.2 or 506.3~~ for height increases or for area increases, an automatic sprinkler system installed in accordance with Section 903.3.1.2 shall be allowed in Group R-2.1 occupancies.

An automatic sprinkler system designed in accordance with Section 903.3.1.3 shall not be utilized in Group R-2.1 or R-4 occupancies.

903.2.8.2 ~~Group R-4 Condition 1~~*Reserved.* ~~An automatic sprinkler system installed in accordance with Section 903.3.1.3 shall be permitted in Group R-4 Condition 1 occupancies.~~

903.2.8.3 Group R-~~4 Condition 2~~. An automatic sprinkler system installed in accordance with Section 903.3.1.2 shall be permitted in Group R-4 ~~Condition 2~~ occupancies. Attics shall be protected in accordance with Section 903.2.8.3.1 or 903.2.8.3.2.

903.3.1.3 NFPA 13D sprinkler systems. Automatic sprinkler systems installed in one- and two-family dwellings, Group R-3, ~~Group R-4 Condition 1~~ and townhouses shall be permitted to be installed throughout in accordance with NFPA 13D *as amended in Chapter 35.*

904.11.3 Testing and maintenance. Automatic water mist systems shall be tested and maintained in accordance with *California Code of Regulations, Title 19, Division 1, Chapter 5 and* the ~~*International*~~*California* Fire Code.

904.13 ~~Domestic cooking systems in Group I-2 Condition 1~~*Reserved.* ~~In Group I-2 Condition 1, occupancies where cooking facilities are installed in accordance with Section 407.2.6 of this code, the domestic cooking hood provided over the cooktop or range shall be equipped with an automatic fire-extinguishing system of a type recognized for protection of domestic cooking equipment. Preengineered automatic extinguishing systems shall be tested in accordance with UL 300A and listed and labeled for the intended application. The system shall be installed in accordance with this code, its listing and the manufacturer's instructions.~~

904.13.2 ~~Portable fire extinguishers for domestic cooking equipment in Group I-2 Condition 1~~*Reserved.* ~~A portable fire extinguisher complying with Section 906 shall be installed within a 30-foot (9144 mm) distance of travel from domestic cooking appliances.~~

907.2.6.4. Large family day-care. *Every large family day-care home shall be provided with at least one manual fire alarm box at a location approved by the authority having jurisdiction. Such device shall actuate a fire alarm signal, which shall be audible throughout the facility at a minimum level of 15 db above ambient noise level. These devices need not be interconnected to any other fire alarm device, have a control panel or be electrically supervised or provided with emergency power. Such device or devices shall be attached to the structure and must be a device that is listed and approved by the Office of the State Fire Marshal.*

907.2.11.3 Installation near cooking appliances. ~~Smoke alarms shall not be installed in the following locations unless this would prevent placement of a smoke alarm in a location required by Section 907.2.11.1 or 907.2.11.2:~~
~~1. Ionization smoke alarms shall not be installed less than 20 feet (6096 mm) horizontally from a permanently installed cooking appliance.~~
~~2. Ionization smoke alarms with an alarm silencing switch shall not be installed less than 10 feet (3048 mm) horizontally from a permanently installed cooking appliance.~~
~~3. Photoelectric smoke alarms shall not be installed less than 6 feet (1829 mm) horizontally from a permanently installed cooking appliance.~~ *See Section 907.2.11.8.*

907.2.11.4 Installation near bathrooms. ~~Smoke alarms shall be installed not less than 3 feet (914 mm) horizontally from the door or opening of a bathroom that contains a bathtub or shower unless this would prevent placement of a smoke alarm required by Section 907.2.11.1 or 907.2.11.2.~~ *See Section 907.2.11.8.*

907.4.2.2 Height. The height of the manual fire alarm boxes shall be not less than 42 inches (1067 mm) and a not more than 48 inches (1372 mm) measured vertically, from the floor level to the *highest point of the* activating handle or lever of the box. *Manual fire alarm boxes shall also comply with Section 11B-309.4.*

Exception: [DSA-AC] *In existing buildings there is no requirement to retroactively relocate existing manual fire alarm boxes to a minimum of 42 inches (1219 mm) and a maximum of 48 inches (1372 mm) from the floor level to the activating handle or lever of the box.*

907.5.2.1 Audible alarms. Audible alarm notification appliances shall be provided and emit a distinctive sound that is not to be used for any purpose other than that of a fire alarm. *In Group I-2 occupancies, audible appliances located in patient areas shall be only chimes or similar sounding appliances for alerting staff. See Section ~~907.6.5~~907.6.6.*

Exceptions:
1. Audible alarm notification appliances are not required in ~~critical care~~ *patient* areas of Group I-2 ~~Condition 2~~ occupancies that are in compliance with Section 907.2.6, Exception 2.
2. A visible alarm notification appliance installed in a nurses' control station or other continuously attended staff location in a Group I-2 ~~Condition 2~~ suite shall be an acceptable alternative to the installation of audible alarm notification appliances throughout the suite in Group I-2 ~~Condition 2~~ occupancies that are in compliance with Section 907.2.6, Exception 2.
3. Where provided, audible notification appliances located in each occupant evacuation elevator lobby in accordance with Section 3008.9.1 shall be connected to a separate notification zone for manual paging only.

907.5.2.2.4 Emergency voice/alarm communication captions. Where stadiums, arenas and grandstands ~~are required to caption audible public announcements in accordance with Section 1108.2.7.3~~ *have 15,000 fixed seats or more and provide audible public announcements with prerecorded or real-time captions*, the emergency/voice alarm communication system shall be captioned. Prerecorded or live emergency captions shall be from an approved location constantly attended by personnel trained to respond to an emergency.

909.20.4.2 Relief vent. *A relief vent capable of discharging a minimum of 2,500 cubic feet per minute (1180 L/s) of air at the design pressure difference shall be located in the upper portion of such pressurized exit stairway or ramp enclosures.*

Exception: *When approved by the enforcing agency, other engineered design methods capable of discharging a minimum of 2,500 cubic feet per minute (1180 L/s) of air at the design pressure difference shall be permitted.*

[Editorial Note: Remove existing amendments to Section 910.1 through 910.4.7. Model code now matches old CA amendments.]
910.1 General. Where required by this code, smoke and heat vents or mechanical smoke removal ~~*removal*~~ systems shall conform to the requirements of this section.

910.2 Where required. Smoke and heat vents or a mechanical smoke removal system ~~*or mechanical smoke removal system*~~ shall be installed as required by Sections 910.2.1 and 910.2.2. *In occupied portions of a building where the upper surface of the story is not a roof assembly, a mechanical smoke removal system in accordance with Section 910.4 shall be installed*

Exceptions:
1. Frozen food warehouses used solely for storage of Class I and II commodities where protected by an approved automatic sprinkler system.
2. Smoke and heat removal shall not be required in areas of buildings equipped with early suppression fast-response (ESFR) sprinklers.
~~*1. Frozen food warehouses used solely for storage of Class I and II commodities where protected by an approved automatic sprinkler system.*~~
~~*2. Where areas of buildings are equipped with early suppression fast-response (ESFR) sprinklers, smoke and heat removal shall not be required within these areas.*~~
3. Smoke and heat removal shall not be required in areas of buildings equipped with control mode special application sprinklers with a response time index of 50 (m · s)1/2 or less that are listed to control a fire in stored commodities with 12 or fewer sprinklers.

910.2.1 Group F-1 or S-1. Smoke and heat vents installed in accordance with Section 910.3 or a mechanical smoke removal system installed in accordance with Section 910.4 shall be installed in ~~*Smoke and heat vents installed in accordance with Section 910.3 or a mechanical smoke removal system installed in accordance with Section 910.4 shall be installed in*~~ buildings and portions thereof used as a Group F-1 or S-1 occupancy having more than 50,000

square feet (4645 m2) of undivided area. In occupied portions of a building equipped throughout with an automatic sprinkler system in accordance with Section 903.3.1.1 where the upper surface of the story is not a roof assembly, a mechanical smoke removal system in accordance with Section 910.4 shall be installed.

Exception: *Group F-1 aircraft manufacturing buildings and* Group S-1 aircraft repair hangars.

910.2.2 High-piled combustible storage. Smoke and heat removal required by Table 3206.2 of the International Fire Code for buildings and portions thereof containing high-piled combustible storage shall be installed in accordance with Section 910.3 in unsprinklered buildings. In buildings and portions thereof containing high-piled combustible storage equipped throughout with an automatic sprinkler system in accordance with Section 903.3.1.1, a smoke and heat removal system shall be installed in accordance with Section 910.3 or 910.4. ~~*Smoke and heat removal required by Table 3206.2 of the California Fire Code, for* buildings and portions thereof containing high-piled combustible storage *shall be installed in accordance with Section 910.3 in unsprinklered buildings. In buildings and portions thereof containing high-piled combustible storage equipped throughout with an automatic sprinkler system in accordance with Section 903.3.1.1 a smoke and heat removal system shall be installed in accordance with Section 910.3 or 910.4.*~~ In occupied portions of a building equipped throughout with an automatic sprinkler system in accordance with Section 903.3.1.1, where the upper surface of the story is not a roof assembly, a mechanical smoke removal system in accordance with Section 910.4 shall be installed.

910.3 Smoke and heat vents. The design and installation of smoke and heat vents shall be in accordance with Sections 910.3.1 through 910.3.3.
~~**910.3 *Smoke and heat vents.*** The design and installation of smoke and heat vents shall be in *accordance with* Sections 910.3.1 through *910.3.3.*~~

910.3.1 Listing and labeling ~~***Listing and labeling***~~**.** Smoke and heat vents shall be listed and labeled to indicate compliance with UL 793, ~~or~~ FM 4430 ~~*FM 4430*~~, *or ICC ES AC 331*~~*, or UL 793*~~.

910.3.2 Smoke and heat vent ~~***Smoke and heat vent***~~ **locations.** Smoke and heat vents shall be located 20 feet (6096 mm) or more from adjacent lot lines and fire walls and 10 feet (3048 mm) or more from fire barriers. Vents shall be uniformly located within the roof in the areas of the building where the vents are required to be installed by Section 910.2 with consideration given to roof pitch, sprinkler location and structural members.

910.3.3 Smoke and heat vents area. The required aggregate area of smoke and heat vents shall be calculated as follows:

For buildings equipped throughout with an automatic sprinkler system in accordance with Section 903.3.1.1:
$A_{VR} = V/9000$ **(Equation 9-4)**
where:
A_{VR} = The required aggregate vent area (ft^2)
V = Volume (ft^3) of the area that requires smoke removal
For unsprinklered buildings:
$A_{VR} = A_{FA}/50$ **(Equation 9-5)**
where:
A_{VR} = The required aggregate vent area (ft^2)
A_{FA} = The area of the floor of the area that requires smoke removal.

~~***910.3.3 Smoke and heat vents area.*** *The required aggregate area of smoke and heat vents shall be calculated as follows:*~~

~~*For buildings equipped throughout with an automatic sprinkler system in accordance with Section 903.3.1.1:*~~
~~$A_{VR} = V/9000$ **(Equation 9-4)**~~
~~*Where:*~~
~~A_{VR} *= the required aggregate vent area (ft^2)*~~
~~*V = volume (ft^3) of the area that requires smoke removal*~~
~~*For unsprinklered buildings:*~~
~~$A_{VR} = A_{FA}/50$ **(Equation 9-5)**~~

~~*Where:*~~
~~A_{VR} = the required aggregate vent area (ft^2)~~
~~A_{FA} = the area of the floor of the area that requires smoke removal.~~

910.4 Mechanical smoke removal systems ~~**removal systems.**~~ Mechanical smoke removal systems shall designed and installed in accordance with Sections 910.4.1 through 910.4.7. ~~Engineered mechanical smoke removal systems shall designed and installed in accordance with Sections 910.4.1 through 910.4.7~~

910.4.1 Automatic sprinklers required. The building shall be equipped throughout with an approved automatic sprinkler system in accordance with Section 903.3.1.1.
~~***910.4.1 Automatic sprinklers required.*** *The building shall be equipped throughout with an approved automatic sprinkler system in accordance with Section 903.3.1.1.*~~

910.4.2 Exhaust fan construction. Exhaust fans that are part of a mechanical smoke removal system shall be rated for operation at 221°F (105°C). Exhaust fan motors shall be located outside of the exhaust fan air stream.
~~***910.4.2 Exhaust fan construction.*** *Exhaust fans that are part of a mechanical smoke removal system shall be rated for operation at 105 deg. C. Exhaust fan motors shall be located outside of the exhaust fan air stream.*~~

910.4.3 System design criteria. The mechanical smoke removal system shall be sized to exhaust the building at a minimum rate of two air changes per hour based upon the volume of the building or portion thereof without contents. The capacity of each exhaust fan shall not exceed 30,000 cubic feet per minute (14.2 m3/sec).
~~***910.4.3 System design criteria.*** *The mechanical smoke removal system shall be sized to exhaust the building at a minimum rate of two air changes per hour based upon the volume of the building or portion thereof without contents. The capacity of each exhaust fan shall not exceed 30,000 cubic feet per minute.*~~

910.4.3.1 Makeup air. Makeup air openings shall be provided within 6 feet (1829 mm) of the floor level. Operation of makeup air openings shall be manual or automatic. The minimum gross area of makeup air inlets shall be 8 square feet per 1,000 cubic feet per minute (0.74 m2 per 0.4719 m3/s) of smoke exhaust.
~~***910.4.3.1 Make-up air.*** *Make-up air openings shall be provided within six feet (add metric) of the floor level. Operation of makeup air openings shall be manual or automatic. The minimum gross area of make-up air inlets shall be 8 ft^2 per 1000 cfm of smoke exhaust.*~~

910.4.4 Activation. The mechanical smoke removal system shall be activated by manual controls only.
~~***910.4.4 Activation.*** *The mechanical smoke removal system shall be activated by manual controls only.*~~

910.4.5 Manual control location. Manual controls shall be located so as to be accessible to the fire service from an exterior door of the building and protected against interior fire exposure by not less than 1-hour fire barriers constructed in accordance with Section 707 or horizontal assemblies constructed in accordance with Section 711, or both.
~~***910.4.5 Manual control location.*** *Manual controls shall be located so as to be accessible to the fire service from an exterior door of the building and be protected against interior fire exposure by not less than 1-hour fire barriers constructed in accordance with Section 707 of the California Building Code or horizontal assemblies constructed in accordance with Section 712 of the California Building Code, or both.*~~

910.4.6 Control wiring. Wiring for operation and control of mechanical smoke removal systems shall be connected ahead of the main disconnect in accordance with Section 701.12E of *the* ~~NFPA 70~~ *California Electric Code* and be protected against interior fire exposure to temperatures in excess of 1,000°F (538°C) for a period of not less than 15 minutes.
~~***910.4.6 Control wiring.*** *Wiring for operation and control of mechanical smoke removal systems shall be connected ahead of the main disconnect in accordance with Section 701.12E of NFPA 70 and be protected against interior fire exposure to temperatures in excess of 1,000°F (538°C) for a period of not less than 15 minutes.*~~

910.4.7 Controls. Where building air-handling and mechanical smoke removal systems are combined or where independent building air-handling systems are provided, fans shall automatically shut down in accordance with the ~~International~~*California* Mechanical Code. The manual controls provided for the smoke removal system shall have the capability to override the automatic shutdown of fans that are part of the smoke removal system.
~~***910.4.7 Controls.*** *Where building air handling and mechanical smoke removal systems are combined or where independent building air-handling systems are provided, fans shall automatically shut down in accordance with the*~~

~~*International Mechanical Code. The manual controls provided for the smoke removal system shall have the capability to override the automatic shutdown of fans that are part of the smoke removal system.*~~

SECTION 915
CARBON MONOXIDE DETECTION

915.1 General. Carbon monoxide detection shall be installed in new buildings in accordance with Sections 915.1.1 through ~~915.6~~*915.7*. Carbon monoxide detection shall be installed in existing buildings in accordance with ~~Chapter 11 of the International Fire Code~~ *this section*.

Pursuant to Health and Safety Code Section 17926, carbon monoxide detection shall be installed in all existing Group R buildings as required in this section.

915.1.1 Where required. Carbon monoxide detection shall be provided in Group ~~I-1,~~ I-2, I-4 and R occupancies and in classrooms in Group E occupancies in the locations specified in Section 915.2 where any of the conditions in Sections 915.1.2 through 915.1.6 exist.

915.2 Locations. Where required by Section 915.1.1, carbon monoxide detection shall be installed *in accordance with the manufacturer's published instructions* in the locations specified in Sections 915.2.1 through 915.2.3.

915.2.1 Dwelling units. Carbon monoxide detection shall be installed in dwelling units *in the following locations:*
1. ~~outside~~ Outside of each separate sleeping area in the immediate vicinity of the bedrooms.
2. On every occupiable level of a dwelling unit, including basements.
3. Where a fuel-burning appliance is located within a bedroom or its attached bathroom, carbon monoxide detection shall be installed within the bedroom.

915.4 Carbon monoxide alarms. Carbon monoxide alarms shall comply with Sections 915.4.1 through 915.4.~~3~~*4*.

915.4.1 Power source. Carbon monoxide alarms shall receive their primary power from the building wiring where such wiring is served from a commercial source, and when primary power is interrupted, shall receive power from a battery. Wiring shall be permanent and without a disconnecting switch other than that required for overcurrent protection.

Exceptions:
1. Where installed in buildings without commercial power, battery-powered carbon monoxide alarms shall be an acceptable alternative.
2. Carbon monoxide alarms in Group R occupancies shall be permitted to receive their primary power from other power sources recognized for use by NFPA 720.
3. Carbon monoxide alarms in Group R occupancies shall be permitted to be battery-powered or plug-in with a battery backup in existing buildings built prior to January 1, 2011, under any of the following conditions:
3.1. No construction is taking place.
3.2. Repairs or alterations do not result in the removal of interior wall and ceiling finishes exposing the structure in areas/spaces where carbon monoxide alarms are required.
3.3. Repairs or alterations are limited to the exterior surfaces of dwellings, such as the replacement of roofing or siding, or the addition or replacement of windows or doors, or the addition of a porch or deck.
3.4. Work is limited to the installation, alteration or repair of plumbing, mechanical or electrical systems, which do not result in the removal of interior wall or ceiling finishes exposing the structure in areas/spaces where carbon monoxide alarms are required.

915.4.2 Listings. Carbon monoxide alarms shall be listed in accordance with UL 2034.

No person shall install, market, distribute, offer for sale, or sell any carbon monoxide device in the State of California unless the device and instructions have been approved and listed by the Office of the State Fire Marshal.

915.4.3 Combination alarms. Combination carbon monoxide/smoke alarms shall be an acceptable alternative to carbon monoxide alarms. Combination carbon monoxide/smoke alarms shall be listed in accordance with UL 2034 and UL 217.

Combination carbon monoxide/smoke alarms shall comply with Section 915, and all requirements for listing and approval by the Office of the State Fire Marshal for smoke alarms.

915.4.4 Interconnection. *Where more than one carbon monoxide alarm is required to be installed within a dwelling unit or within a sleeping unit in Group R occupancies, the alarms shall be interconnected in a manner that activation of one alarm shall activate all of the alarms in the individual unit.*

Exception: *Interconnection is not required in existing buildings, built prior to January 1, 2011, under any of the following conditions:*
1. Physical interconnection is not required where listed wireless alarms are installed and all alarms sound upon activation of one alarm.
2. No construction is taking place.
3. Repairs or alterations do not result in the removal of interior wall and ceiling finishes exposing the structure in areas/spaces where carbon monoxide alarms are required.
4. Repairs or alterations are limited to the exterior surfaces of dwellings, such as the replacement of roofing or siding, or the addition or replacement of windows or doors, or the addition of a porch or deck.
5. Work is limited to the installation, alteration or repair of plumbing, mechanical, or electrical systems, which do not result in the removal of interior wall or ceiling finishes exposing the structure in areas/spaces where carbon monoxide alarms are required.

915.5.2 Locations. Carbon monoxide detectors shall be installed in the locations specified in Section 915.2 *or NFPA 720*. ~~These locations supersede the locations specified in NFPA 720.~~

915.5.3 Combination detectors. Combination carbon monoxide/smoke detectors installed in carbon monoxide detection systems shall be an acceptable alternative to carbon monoxide detectors, provided they are listed in accordance with UL 2075 and UL 268.

Combination carbon monoxide/smoke detectors shall comply with all requirements for listing and approval by the Office of the State Fire Marshal for smoke alarms.

915.6 Maintenance. Carbon monoxide alarms and carbon monoxide detection systems shall be maintained in accordance with ~~the International Fire Code~~ *NFPA 720. Carbon monoxide alarms and carbon monoxide detectors that become inoperable or begin producing end-of-life signals shall be replaced.*

915.7 Visible alarms. *In buildings containing covered multifamily dwellings as defined in Chapter 2, all required carbon monoxide alarms shall be equipped with the capability to support visible alarm notification in accordance with NFPA 720.*

Notation:
Authority: Health and Safety Code Sections 1250, 1569.72, 1569.78, 1568.02, 1502, 1597.44, 1597.65, 13108, 13143, 13143.9, 13146, 13210, 13211, 17921, 18949.2, Public Education Code 17074.50
References: Health and Safety Code Sections 13143, 13211, 18949.2

[12. The SFM proposes to adopt Chapter 10 with the following amendments and California regulations.]

See Item 46 for existing SFM amendments and California regulations that are brought forward without modification.

CHAPTER 10
MEANS OF EGRESS

1004.3 Posting of occupant load. Every room or space ~~that is an assembly occupancy~~*which is used for assembly, classroom, dining, drinking, or similar purposes having an occupant load of 50 or more* shall have the occupant load of the room or space posted in a conspicuous place, near the main exit or exit access doorway from the room or space. Posted signs shall be of an approved legible permanent design and shall be maintained by the owner or the owner's authorized agent.

1005.3.1 Stairways. The capacity, in inches, of means of egress stairways shall be calculated by multiplying the occupant load served by such stairways by a means of egress capacity factor of 0.3 inch (7.6 mm) per occupant. Where stairways serve more than one story, only the occupant load of each story considered individually shall be used in calculating the required capacity of the stairways serving that story.

Exceptions:
1. For other than Group H and I-2 occupancies, the capacity, in inches, of means of egress stairways shall be calculated by multiplying the occupant load served by such stairways by a means of egress capacity factor of 0.2 inch (5.1 mm) per occupant in buildings equipped throughout with an automatic sprinkler system installed in accordance with Section 903.3.1.1 or 903.3.1.2 and an emergency voice/alarm communication system in accordance with Section 907.5.2.2.
2. Facilities with smoke-protected assembly seating shall be permitted to use the capacity factors in Table 1029.6.2 indicated for stepped aisles for exit access or exit stairways where the entire path for means of egress from the seating to the exit discharge is provided with a smoke control system complying with Section 909.
3. Facilities with outdoor smoke-protected assembly seating shall be permitted to the capacity factors in Section 1029.6.3 indicated for stepped aisles for exit access or exit stairways where the entire path for means of egress from the seating to the exit discharge is open to the outdoors.
~~2.~~*4.For Group H-1, H-2, H-3 and H-4 occupancies the total width of means of egress in inches (mm) shall not be less than the total occupant load served by the means of egress multiplied by 0.7 inches (7.62 mm) per occupant.*
~~3.~~*5. For rooms or spaces used for assembly purposes without smoke protection see~~Means of egress complying with~~ Section ~~1028~~1029.*

1006.3.2 Single exits. A single exit or access to a single exit shall be permitted from any story or occupied roof where one of the following conditions exists:
1. The occupant load, number of dwelling units and exit access travel distance do not exceed the values in Table 1006.3.2(1) or 1006.3.2(2).
2. Rooms, areas and spaces*, at the level of exit discharge,* complying with Section 1006.2.1 with exits that discharge directly to the exterior ~~at the level of exit discharge~~, are permitted to have one exit or access to a single exit.
3. Parking garages where vehicles are mechanically parked shall be permitted to have one exit or access to a single exit.
4. Group R-3 and R-4 occupancies shall be permitted to have one exit or access to a single exit.
5. Individual single-story or multistory dwelling units shall be permitted to have a single exit or access to a single exit from the dwelling unit provided that both of the following criteria are met:

5.1. The dwelling unit complies with Section 1006.2.1 as a space with one means of egress.
5.2. Either the exit from the dwelling unit discharges directly to the exterior at the level of exit discharge, or the exit access outside the dwelling unit's entrance door provides access to not less than two approved independent exits.

1006.3.2.1 Mixed occupancies. Where one exit, or exit access stairway or ramp providing access to exits at other stories, is permitted to serve individual stories, mixed occupancies shall be permitted to be served by single exits provided each individual occupancy complies with the applicable requirements of Table 1006.3.2(1) or Table 1006.3.2(2) for that occupancy. Where applicable, cumulative occupant loads from adjacent occupancies shall be considered in accordance with the provisions of Section 1004.1. In each story of a mixed occupancy building, the maximum number of occupants served by a single exit shall be such that the sum of the ratios of the calculated number of occupants of the space divided by the allowable number of occupants indicated in Table 1006.3.2(2) ~~*indicated in Table 1021.2(2)*~~ for each occupancy does not exceed one. Where dwelling units are located on a story with other occupancies, the actual number of dwelling units divided by four plus the ratio from the other occupancy does not exceed one. ~~*Where dwelling units are located on a story with other occupancies, the actual number of dwelling units divided by 4 plus the ratio from the other occupancy does not exceed one.*~~

1010.1.9.7 Delayed egress. Delayed egress locking systems shall be permitted to be installed on doors serving any occupancy except Group A, E ~~and~~ H, and *L*.

Exception: *Group A occupancy courtrooms are permitted to utilize delayed egress locks.*

~~in b~~*B*uildings ~~that are~~ *with delayed egress locks shall be* equipped throughout with an automatic sprinkler system in accordance with Section 903.3.1.1 ~~or~~ *and* an approved automatic smoke ~~or heat~~ detection system installed in accordance with Section 907. The *delayed egress* locking system shall be installed and operated in accordance with all of the following: ~~*Delayed egress devices shall conform to all of the following:*~~

1. The delay electronics of the delayed egress locking system shall deactivate upon actuation of the automatic sprinkler system or automatic fire detection system, allowing immediate, free egress.

2. The delay electronics of the delayed egress locking system shall deactivate upon loss of *electrical* power ~~controlling the lock or lock mechanism~~, allowing immediate free egress~~.~~, *to ~~a~~any one of the following*:
2.1 The egress-control device itself.
2.2 The smoke detection system.
2.3 Means of egress illumination as required by Section ~~1006~~1008

3. The delayed egress locking system shall have the capability of being deactivated at the fire command center and— ~~*a switch located in an approved location*~~ approved locations.
4. An attempt to egress shall initiate an irreversible process that shall allow such egress in not more than 15 seconds when a physical effort to exit is applied to the egress side door hardware for not more than 3 seconds. Initiation of the irreversible process shall activate an audible signal in the vicinity of the door. Once the delay electronics have been deactivated, rearming the delay electronics shall be by manual means only. *The time delay established for each egress-control device shall not be field adjustable. For applications listed in Section 1.9.1 regulated by the Division of the State Architect- Access Compliance, see Chapter 11B*

Exception: ~~Where approved~~ *In facilities housing Alzheimer's or dementia clients*, a delay of not more than 30 seconds is permitted on a delayed egress door.

5. The egress path from any point shall not pass through more than one delayed egress locking system.

Exception: In Group I-2 or I-3 occupancies, the egress path from any point in the building shall pass through not more than two delayed egress locking systems provided the combined delay does not exceed 30 seconds.

~~5. A sign shall be provided on the door located above and within 12 inches (305 mm) of the release device reading: PUSH UNTIL ALARM SOUNDS. DOOR CAN BE OPENED IN 15 [30] SECOMDS. "KEEP PUSHING. THIS DOOR WILL OPEN IN 15 [30] SECONDS. ALARM WILL SOUND" *Sign lettering shall be at least 1inch (25 mm) in height and shall have a stroke of not less than 1/8 inch (3.2 mm).*~~
~~*5.1. A tactile sign shall also be provided in Braille and raised characters, which complies with Chapter 11B.*~~

6. A sign shall be provided on the door and shall be located above and within 12 inches (305 mm) of the door exit hardware:
6.1. For doors that swing in the direction of egress, the sign shall read: PUSH UNTIL ALARM SOUNDS. DOOR CAN BE OPENED IN 15 [30] SECONDS ~~"KEEP PUSHING. THIS DOOR WILL OPEN IN 15 [30] SECONDS. ALARM WILL SOUND".~~
6.2. For doors that swing in the opposite direction of egress, the sign shall read: PULL UNTIL ALARM SOUNDS. DOOR CAN BE OPENED IN 15 [30] SECONDS
6.3. ~~The sign shall comply with the visual character requirements in ICC A117.1.~~ *Sign lettering shall be at least 1inch (25 mm) in height and shall have a stroke of not less than 1/8 inch (3.2 mm).*

Exception: Where approved, in Group I occupancies, the installation of a sign is not required where care recipients who because of clinical needs require restraint or containment as part of the function of the treatment area.

6.4. A tactile sign shall also be provided in Braille and raised characters, which complies with Chapter 11B

7. Emergency lighting shall be provided on the egress side of the door.
8. The delayed egress locking system units shall be listed in accordance with UL 294.
~~7~~9. Actuation of the panic bar or other door-latching hardware shall activate an audible signal at the door.
~~8~~10. The unlatching shall not require more than one operation.
~~9~~11. Regardless of the means of deactivation, relocking of the egress-control device shall be by manual means only at the door.

1010.1.9.8 Sensor release of electrically locked egress doors. The electric locks on sensor released doors located in a means of egress in buildings with an occupancy in Group A, B, ~~E, I-1,~~ I-2, I-4, M, R-1, ~~or~~ R-2, *or R-2.1* ~~*and entrance doors to tenant spaces in occupancies in Groups A, B, I-2, M, R-1 and R-2,*~~ and entrance doors to

tenant spaces in occupancies in Group A, B, ~~E, I-1,~~ I-2, I-4, M, R-1, ~~or~~ R-2, *or R-2.1* are permitted where installed and operated in accordance with all of the following criteria:

1. The sensor shall be installed on the egress side, arranged to detect an occupant approaching the doors. The doors shall be arranged to unlock by a signal from or loss of power to the sensor.
2. Loss of power to the lock or locking system shall automatically unlock the doors.
3. The doors shall be arranged to unlock from a manual unlocking device located 40 inches to 48 inches (1016 mm to 1219 mm) vertically above the floor and within 5 feet (1524 mm) of the secured doors. Ready access shall be provided to the manual unlocking device and the device shall be clearly identified by a sign that reads "PUSH TO EXIT." When operated, the manual unlocking device shall result in direct interruption of power to the lock—independent of other electronics— and the doors shall remain unlocked for not less than 30 seconds.
4. Activation of the building fire alarm system, where provided, shall automatically unlock the doors, and the doors shall remain unlocked until the fire alarm system has been reset.
5. Activation of the building automatic sprinkler system or fire detection system, where provided, shall automatically unlock the doors. The doors shall remain unlocked until the fire alarm system has been reset.
6. The door locking system units shall be listed in accordance with UL 294.

1011.15 Ships ladders. Ships ladders are permitted to be used in *lifeguard towers not open to the public and* Group I-3 as a component of a means of egress to and from control rooms or elevated facility observation stations not more than 250 square feet (23 m2) with not more than three occupants and for access to unoccupied roofs. The minimum clear width at and below the handrails shall be 20 inches (508 mm).

1013.6.3 Power source. Exit signs shall be illuminated at all times. To ensure continued illumination for a duration of not less than 90 minutes in case of primary power loss, the sign illumination means shall be connected to an emergency power system provided from storage batteries, unit equipment or an on-site generator. The installation of the emergency power system shall be in accordance with Chapter 27.

Exceptions:
1. Approved exit sign illumination means that provide continuous illumination independent of external power sources for a duration of not less than 90 minutes, in case of primary power loss, are not required to be connected to an emergency electrical system.
2. Group I-2 ~~Condition 2~~ exit sign illumination shall not be provided by unit equipment battery only.

1026.4.2 Number of exits. The refuge area into which a horizontal exit leads shall be provided with exits adequate to meet the occupant requirements of this chapter, but not including the added occupant load imposed by persons entering the refuge area through horizontal exits from other areas. *In other than I-3 Occupancies,* ~~N~~not less than one refuge area exit shall lead directly to the exterior or to an interior exit stairway or ramp.

Exception: The adjoining compartment shall not be required to have a stairway or door leading directly outside, provided the refuge area into which a horizontal exit leads has stairways or doors leading directly outside and are so arranged that egress shall not require the occupants to return through the compartment from which egress originates.

Notation:
Authority: Health and Safety Code Sections 1250, 1569.72, 1569.78, 1568.02, 1502, 1597.44, 1597.65, 13108, 13143, 13143.9, 13146, 13210, 13211, 17921, 18949.2
References: Health and Safety Code Sections 13143, 13211, 18949.2

[13. The SFM proposes to not adopt Chapters 11.]
(Note: This chapter will not be printed in the California Building Code.)

~~CHAPTER 11~~
~~ACCESSIBILITY~~

Notation:
Authority: Health and Safety Code Sections 13108, 13143, 13143.9, 13146, 17921, 18949.2

References: Health and Safety Code Sections 13143, 18949.2

[14. The SFM proposes to not adopt Chapter 11A.]

CHAPTER 11A
HOUSING ACCESSIBILITY

Notation:
Authority: Health and Safety Code Sections 13108, 13143, 13143.9, 13146, 17921, 18949.2
References: Health and Safety Code Sections 13143, 18949.2

[15. The SFM proposes to not adopt Chapter 11B.]

CHAPTER 11B
ACCESSIBILITY TO PUBLIC BUILDINGS, PUBLIC ACCOMMODATIONS, COMMERCIAL BUILDINGS AND PUBLICLY FUNDED HOUSING

Notation:
Authority: Health and Safety Code Sections 13108, 13143, 13143.9, 13146, 17921, 18949.2
References: Health and Safety Code Sections 13143, 18949.2

[16. The SFM proposes to only adopt Sections 1203.5, 1206, 1208 and 1209 of Chapter 12 with the following amendments and California regulations.]

See Item 46 for existing SFM amendments and California regulations that are brought forward without modification.

CHAPTER 12
INTERIOR ENVIRONMENT

Notation:
Authority: Health and Safety Code Sections 13108, 13143, 13143.9, 13146, 17921, 18949.2
References: Health and Safety Code Sections 13143, 18949.2

[17. The SFM proposes to not adopt Chapter 13.]

CHAPTER 13
ENERGY EFFICIENCY

Notation:
Authority: Health and Safety Code Sections 13108, 13143, 13143.9, 13146, 17921, 18949.2
References: Health and Safety Code Sections 13143, 18949.2

[18. The SFM proposes to only adopt Sections 1401, 1402, 1403.4, 1403.5, 1404, 1405, 1406, 1407 and 1408 of Chapter 14 without amendment.]

See Item 46 for existing SFM amendments and California regulations that are brought forward without modification.

CHAPTER 14
EXTERIOR WALLS

Notation:
Authority: Health and Safety Code Sections 13108, 13143, 13143.9, 13146, 17921, 18949.2
References: Health and Safety Code Sections 13143, 18949.2

[19. The SFM proposes to only adopt Sections 1501, 1502, 1505, 1506, 1507, 1509 and 1511 of Chapter 15.]

See Item 46 for existing SFM amendments and California regulations that are brought forward without modification.

CHAPTER 15
ROOF ASSEMBLIES AND ROOFTOP STRUCTURES

[Editorial Note: 2013 CBC amendments for Section 1505.8 is being repealed. 1505.8 shall remain in CBC with model code language.]
1505.8 ~~***Building integrated*** **photovoltaic systems.** Rooftop installed *building integrated* photovoltaic systems that *serve as* the roof covering shall be *listed and* labeled *for* fire classification in accordance with Section 1505.1.~~

[Editorial Note: 2013 CBC amendments for Section 1505.9 is being repealed. 1505.9 shall remain in CBC with model code language.]
~~***1505.9 Photovoltaic panels and modules.*** *Effective January 1, 2015, Rooftop mounted photovoltaic systems shall be tested, listed and identified with a fire classification in accordance with UL 1703. The fire classification shall comply with Table 1505.1 based on the type of construction of the building.*~~

[Editorial Note: 2013 CBC amendments for Section 1510.7.2 is being repealed. 1510.7.2 shall remain in CBC with model code language.]
~~**1510.7.2 Fire classification.** Rooftop mounted photovoltaic systems shall have the fire classification as the roof assembly required by Section 1505.9.~~

[Editorial Note: 2013 CBC amendments for Section 1512.1.1 is being deleted as section has been removed.]
~~**1511.1.1 Structural fire resistance.** The structural frame and roof construction supporting the load imposed upon the roof by the photovoltaic panels/modules shall comply with the requirements of Table 601 *and Section 602.1.*~~

Notation:
Authority: Health and Safety Code Sections 1250, 1502, 1568.02, 1569.72, 1569.78, 11159.2, 13108, 13131.5, 13133, 13143, 13108.5(a), 13210, 13211, 18949.2, Government Code Section 51189.
References: Health and Safety Code Sections 13143, Government Code Sections 51176, 51177, 51178, 51179, Public Resources Code Sections 4201 through 4204.

[20. The SFM proposes to not adopt Chapters 16]

CHAPTER 16
STRUCTURAL DESIGN

Notation:
Authority: Health and Safety Code Sections 13108, 13143, 13143.9, 13146, 17921, 18949.2

References: Health and Safety Code Sections 13143, 18949.2

[21. The SFM proposes to not adopt Chapters 17.]

CHAPTER 17
STRUCTURAL TESTS AND SPECIAL INSPECTIONS

Notation:
Authority: Health and Safety Code Sections 1250, 1502, 1568.02, 1569.72, 1569.78, 11159.2, 13108, 13131.5, 13133, 13143, 13108.5(a), 13210, 13211, 18949.2, Government Code Section 51189.
References: Health and Safety Code Sections 13143, Government Code Sections 51176, 51177, 51178, 51179, Public Resources Code Sections 4201 through 4204.

[22. The SFM proposes to not adopt Chapters 18 through 20.]

CHAPTER 18
SOILS AND FOUNDATIONS

CHAPTER 19
CONCRETE

CHAPTER 20
ALUMINUM

Notation:
Authority: Health and Safety Code Sections 13108, 13143, 13143.9, 13146, 17921, 18949.2
References: Health and Safety Code Sections 13143, 18949.2

[23. The SFM proposes to only adopt Section 2113.9.2 of Chapter 21 without modification.]

See Item 46 for existing SFM amendments and California regulations that are brought forward without modification.

CHAPTER 21
MASONRY

Notation:
Authority: Health and Safety Code Sections 13108, 13108.5, 13132.7, 13143, 13143.2, 13143.6, 13146, 17921, 18949.2, Government Code Section 51189
References: Health and Safety Code Sections 13143, 18949.2, Government Code Sections 51176, 51177, 51178, 51179, Public Resources Code Sections 4201 through 4204

[24. The SFM proposes to only adopt Section 2113A.9.2 of Chapter 21A without modification.]

See Item 46 for existing SFM amendments and California regulations that are brought forward without modification.

CHAPTER 21A
MASONRY

Notation:
Authority: Health and Safety Code Sections 13108, 13108.5, 13132.7, 13143, 13143.2, 13143.6, 13146, 17921, 18949.2, Government Code Section 51189
References: Health and Safety Code Sections 13143, 18949.2, Government Code Sections 51176, 51177, 51178, 51179, Public Resources Code Sections 4201 through 4204

[25. The SFM proposes to not adopt Chapter 22.]

CHAPTER 22
STEEL

Notation:
Authority: Health and Safety Code Sections 13108, 13143, 13143.9, 13146, 17921, 18949.2
References: Health and Safety Code Sections 13143, 18949.2

[26. The SFM proposes to only adopt Sections 2303.2 – 2303.2.9 of Chapter 23 without amendment.]

CHAPTER 23
WOOD

Notation:
Authority: Health and Safety Code Sections 13108, 13108.5, 13132.7, 13143, 13143.2, 13143.6, 13146, 17921, 18949.2, Government Code Section 51189
References: Health and Safety Code Sections 13143, 18949.2, Government Code Sections 51176, 51177, 51178, 51179, Public Resources Code Sections 4201 through 4204

[27. The SFM proposes to adopt Chapter 24 without amendment.]

CHAPTER 24
GLASS AND GLAZING

Notation:
Authority: Health and Safety Code Sections 13108, 13143, 13143.9, 13146, 17921, 18949.2
References: Health and Safety Code Sections 13143, 18949.2

[28. The SFM proposes to not adopt Chapter 25.]

CHAPTER 25
GYPSUM BOARD AND PLASTER

Notation:
Authority: Health and Safety Code Sections 13108, 13143, 13143.9, 13146, 17921, 18949.2
References: Health and Safety Code Sections 13143, 18949.2

[29. The SFM proposes to adopt Chapter 26 without modifications.]

See Item 46 for existing SFM amendments and California regulations that are brought forward without modification.

CHAPTER 26
PLASTIC

Notation:
Authority: Health and Safety Code Sections 13108, 13143, 13143.9, 13146, 17921, 18949.2
References: Health and Safety Code Sections 13143, 18949.2

[30. The SFM proposes to adopt Chapter 27 without modifications.]

See Item 46 for existing SFM amendments and California regulations that are brought forward without modification.

CHAPTER 27
ELECTRICAL

Notation:
Authority: Health and Safety Code Sections 13108, 13143, 13143.9, 13146, 13210, 13211, 17921, 18949.2
References: Health and Safety Code Sections 13143, 13211, 18949.2

[31. The SFM proposes to adopt Chapter 28 without modifications.]

See Item 46 for existing SFM amendments and California regulations that are brought forward without modification.

CHAPTER 28
MECHANICAL SYSTEMS

Notation:
Authority: Health and Safety Code Sections 13108, 13108.5, 13132.7, 13143, 13143.2, 13143.6, 13146, 17921, 18949.2, Government Code Section 51189
References: Health and Safety Code Sections 13143, 18949.2, Government Code Sections 51176, 51177, 51178, 51179, Public Resources Code Sections 4201 through 4204

[32 The SFM proposes to not adopt Chapter 29.]

See Item 46 for existing SFM amendments and California regulations that are brought forward without modification.

CHAPTER 29
PLUMBING SYSTEMS

Notation:
Authority: Health and Safety Code Sections 13108, 13143, 13143.9, 13146, 17921, 18949.2
References: Health and Safety Code Sections 13143, 18949.2

[33. The SFM proposes to adopt Chapter 30 without modifications.]

See Item 46 for existing SFM amendments and California regulations that are brought forward without modification.

CHAPTER 30
ELEVATORS AND CONVEYING SYSTEMS

Notation:
Authority: Health and Safety Code Sections 13108, 13143, 13143.9, 13146, 17921, 18949.2
References: Health and Safety Code Sections 13143, 18949.2

[34. The SFM proposes to only adopt Sections 3101, 3102, 3103, 3104, 3105, 3105.4, 3106, 3110 and 3111 of Chapter 31 without modifications.]

See Item 46 for existing SFM amendments and California regulations that are brought forward without modification.

CHAPTER 31
SPECIAL CONSTRUCTION

3102.6.1.1 Membrane. A membrane ~~meeting the fire propagation performance criteria of Test Method 1 or Test Method 2, as appropriate, of NFPA 701~~ *shall be flame resistant in accordance with the provisions set forth in CCR, Title 19, Division 1, Chapter 8. Tops and sidewalls shall be made either from fabric which has been flame resistant treated with an approved exterior chemical process by an approved application concern, or from inherently flame resistant fabric approved and listed by the State Fire Marshal (see CCR, Title 19, Division 1, Chapter 8).The membrane* shall be permitted to be used as the roof or as a skylight on buildings of Type IIB, III, IV and V construction, provided the membrane is not less than 20 feet (6096 mm) above any floor, balcony or gallery.

3111.2.2.6 Locations of DC conductors. *Conduit, wiring systems, and raceways for photovoltaic circuits shall be located as close as possible to the ridge or hip or valley and from the hip or valley as directly as possible to an outside wall to reduce trip hazards and maximize ventilation opportunities. Conduit runs between sub arrays and to DC combiner boxes shall be installed in a manner that minimizes the total amount of conduit on the roof by taking the shortest path from the array to the DC combiner box. The DC combiner boxes shall be located such that conduit runs are minimized in the pathways between arrays. DC wiring shall be installed in metallic conduit or raceways when located within enclosed spaces in a building. Conduit shall run along the bottom of load bearing members.*

3111.2.3.4 Locations of DC conductors. *Conduit, wiring systems, and raceways for photovoltaic circuits shall be located as close as possible to the ridge or hip or valley and from the hip or valley as directly as possible to an outside wall to reduce trip hazards and maximize ventilation opportunities. Conduit runs between sub arrays and to DC combiner boxes shall be installed in a manner that minimizes the total amount of conduit on the roof by taking the shortest path from the array to the DC combiner box. The DC combiner boxes shall be located such that conduit runs are minimized in the pathways between arrays. DC wiring shall be installed in metallic conduit or raceways when located within enclosed spaces in a building. Conduit shall run along the bottom of load bearing members.*

Notation:
Authority: Health and Safety Code Sections 13108, 13143, 13143.9, 13146, 17921, 18949.2
References: Health and Safety Code Sections 13143, 18949.2

[35. The SFM proposes to adopt Chapter 32 without amendment.]

See Item 46 for existing SFM amendments and California regulations that are brought forward without modification.

CHAPTER 32
ENCROACHMENT INTO PUBLIC RIGHT-OF-WAY

Notation:
Authority: Health and Safety Code Sections 13108, 13143, 13143.9, 13146, 17921, 18949.2
References: Health and Safety Code Sections 13143, 18949.2

[36. The SFM proposes to adopt Chapter 33 without modifications.]

See Item 46 for existing SFM amendments and California regulations that are brought forward without modification.

CHAPTER 33
SAFEGUARDS DURING CONSTRUCTION

Notation:
Authority: Health and Safety Code Sections 13108, 13143, 13143.9, 13146, 17921, 18949.2
References: Health and Safety Code Sections 13143, 18949.2

CHAPTER 34
RESERVED

[37. The SFM proposes to adopt Chapter 35 with the following amendments and California regulations.]

See Item 46 for existing SFM amendments and California regulations that are brought forward without modification.

CHAPTER 35
REFERENCED STANDARDS

ASTM ASTM International
100 Barr Harbor Drive
West Conshohocken, PA 19428-2959

Standard reference number	Title	Referenced in code section number
E2886–14	*Standard Test Method for Evaluating the Ability of Exterior Vents to Resist the Entry of Embers and Direct Flame Impingent*	*706A.2, 706A.3*

ASTM E2886, Amended Sections as follows:

Revise Sections 10.1.8.3. 10.1.8.4, and 10.1.8.5 as follows:

10.1.8.3 ~~When requested, r~~Report the temperatures of the unexposed temperatures on the unexposed side of the vent during the entire optional Insulation Test of the Flame Intrusion.

10.1.8.4 ~~When requested, t~~The maximum temperature reached during the test by any one of the unexposed surface thermocouples during the entire optional Insulation Test of the Flame Intrusion Test.

10.1.8.5 ~~When requested, t~~The maximum average temperature reached during the test by all of the unexposed surface thermocouples during the entire optional Insulation Test pf the Flame Intrusion Test.

E2957–15	*Standard Test Method for Flammability and Resistance to Wildfire Penetrations of Eaves, Soffits and Other Projections*	*707A.5, 707A.6, 70A.7, 707A.8, 707A.9*

ASTM E2957, Amended Sections as follows:

Add new Section 12.5 as follows:

12.5 Conditions of Acceptance: *Should one of the three replicates fail to meet the Conditions of Acceptance, three additional tests may be run. All of the additional tests must meet the Conditions of Acceptance.*
1. Absence of flame penetration of the eaves or horizontal projection assembly at any time.
2. Absence of structural failure of the eaves or horizontal projection subassembly at any time.
3. Absence of sustained combustion of any kind at the conclusion of the 40-minute test.

25—13 CA	*California NFPA 25 Edition (Based on the 2011 Edition)* *Inspection, Testing and Maintenance of Water-based Fire Protection Systems*	*Chapter 31F*

NFPA

13—~~13~~*16*	Installation of Sprinkler Systems
13D—~~13~~*16*	Installation of Sprinkler Systems in One- and Two-family Dwellings and Manufactured Homes
13R—~~13~~*16*	Installation of Sprinkler Systems in Residential Occupancies up to and Including Four Stories in Height
14—13 ~~*13*~~	Installation of Standpipes and Hose Systems
20-~~13~~*16*	Standard for the Installation of Stationary Pumps for Fire Protection
22—13 ~~*13*~~	Water Tanks for Private Fire Protection
24—~~13~~*16*	Installation of Private Fire Service Mains and Their Appurtenances
31—11 ~~*11*~~	Installation of Oil-burning Equipment
~~*37—10*~~ *15*	*Installation and Use of Stationary Combustion Engines and Gas Turbines*
52—13 ~~*13*~~	Vehicular Gaseous ~~*Gaseous*~~ Fuel System Code
~~*54—12*~~ *15*	*National Fuel Gas Code*
61—13 ~~*13*~~	Prevention of Fires and Dust Explosions in Agricultural and Food Processing Facilities
72—~~13~~*16*	National Fire and Signaling ~~*and Signaling*~~ Alarm Code
80—~~13~~*16*	Fire Doors and Other Opening Protectives

[Editor's Note: Keep model code NFPA 92, repeal CA amendment for NFPA 92.]

92—~~12~~*15*	Standard for Smoke Control Systems
~~*92—12*~~	~~*Standard for Smoke Control Systems*~~
99—15 ~~*12*~~	Health Care Facilities *Code*
101- 15 ~~*12*~~	Life Safety Code
105—~~13~~*16*	Installation of Smoke Door Assemblies and Other Opening Protectives
110—~~13~~*16*	Emergency and Standby Power Systems
111—~~13~~*16*	Stored Electrical Energy Emergency and Standby Power Systems
120—15	Fire Prevention and Control in Coal Mines ~~*Fire Prevention and Control in Coal Mines*~~
211—13 ~~*13*~~	Chimneys, Fireplaces, Vents and Solid Fuel-burning Appliances
259—13 ~~*13*~~	Test Method for Potential Heat of Building Materials
275—13 ~~*13*~~	Standard Method of Fire Tests for the Evaluation of Thermal Barriers Used Over Foam Plastic Insulation
285—12 ~~*12*~~	Standard Method of Test for the Evaluation of Flammability Characteristics of Exterior Nonload-Bearing Wall Assemblies Containing Combustible Components
289—13 ~~*13*~~	Standard Method of Fire Test for Individual Fuel Packages
409—~~11~~*16*	Aircraft Hangars
654—13 ~~*13*~~	Prevention of Fire and Dust Explosions from the Manufacturing, Processing and Handling of Combustible Particulate Solids
720—15 ~~*12*~~	Standard for the Installation of Carbon Monoxide (CO) Detection and Warning Equipment
2001—15 ~~*12*~~	Clean Agent Fire Extinguishing Systems

Notation:
Authority: Health and Safety Code Sections 13108, 13143, 13143.9, 13146, 17921, 18949.2
References: Health and Safety Code Sections 13143, 18949.2

[38. The SFM proposes to not adopt Appendix A and B.]

APPENDIX A
EMPLOYEE QUALIFICATIONS

APPENDIX B
BOARD OF APPEALS

Notation:
Authority: Health and Safety Code Sections 13108, 13143, 13143.9, 13146, 17921, 18949.2
References: Health and Safety Code Sections 13143, 18949.2

[39. The SFM proposes to adopt Appendix C without amendment.]

APPENDIX C
GROUP U – AGRICULTURAL BUILDINGS

Notation:
Authority: Health and Safety Code Sections 13108, 13143, 13143.9, 13146, 17921, 18949.2
References: Health and Safety Code Sections 13143, 18949.2

[40. The SFM proposes to not adopt Appendices D through H.]

APPENDIX D
FIRE DISTRICTS

APPENDIX E
SUPPLEMENTARY ACCESSIBILITY REQUIREMENTS

APPENDIX F
RODENT PROOFING

APPENDIX G
FLOOD RESISTANT CONSTRUCTION

APPENDIX H
SIGNS

Notation:
Authority: Health and Safety Code Sections 13108, 13143, 13143.9, 13146, 17921, 18949.2
References: Health and Safety Code Sections 13143, 18949.2

[41. The SFM proposes to only adopt Sections I101, I102 and I103 of Appendix I without amendment.]

APPENDIX I
PATIO COVERS

Notation:
Authority: Health and Safety Code Sections 13108, 13143, 13143.9, 13146, 17921, 18949.2
References: Health and Safety Code Sections 13143, 18949.2

[42. The SFM proposes to not adopt Appendix J through M.]

APPENDIX J
EXCAVATION AND GRADING

APPENDIX K
GROUP R-3 AND GROUP R-3.1 OCCUPANCIES PROTECTED BY THE FACILITIES OF THE CENTRAL VALLEY FLOOD PROTECTION PLAN

APPENDIX L
EARTHQUAKE RECORDING INSTRUMENTATION

APPENDIX M
TSUNAMI-GENERATED FLOOD HAZARD

Notation:
Authority: Health and Safety Code Sections 13108, 13143, 13143.9, 13146, 17921, 18949.2
References: Health and Safety Code Sections 13143, 18949.2

[43. Incorporation and correlation of NFPA 130 Standard for Fixed Guideway Transit and Passenger Rail Systems into the California Codes]

SECTION ~~433~~443
FIXED GUIDEWAY TRANSIT AND PASSENGER RAIL SYSTEMS [SFM]

~~433.1~~443.1 General.

~~433.1.1~~443.1.1 Scope. *The provisions of this section and NFPA 130 shall apply to buildings or structures defined as stations for fixed guideway transit and passenger rail systems and shall supersede other similar requirements in other sections of this code.*

Note: *See Chapter 35 for California Amendments to NFPA 130.*

~~***433.1.2 Definitions.*** *For the purpose of this section, certain terms are defined as follows:*~~

~~***AT-GRADE STATION.*** *Any at-grade or unroofed station other than an elevated or underground station.*~~

~~***ELEVATED STATION.*** *A station greater than one story not otherwise defined as an at-grade or underground station.*~~

~~***EMERGENCY MANAGEMENT PANEL (EMP).*** *The location where all necessary on-site control and communication facilities are consolidated for effective response to emergency situations.*~~

~~***ENCLOSED STATION.*** *A station or portion thereof that does not meet the definition of an open station.*~~

~~***ENGINEERING ANALYSIS (FIRE HAZARD/FIRE RISK ASSESSMENT).*** *An analysis that evaluates all various factors that affect the fire safety of the system or component. A written report of the analysis shall indicate the fire protection method(s) recommended that demonstrates a level of fire safety commensurate with this standard.*~~

~~***FIXED GUIDEWAY TRANSIT SYSTEM(the system).*** *An automated driverless or manually controlled electrified transportation system, utilizing a fixed guideway, operating on right-of-way for the mass movement of passengers and consisting of its fixed guideways, transit vehicles and other rolling stock; power system; buildings; maintenance facilities; stations; transit vehicle yard; and other stationary and movable apparatus, equipment, appurtenances and structures.*~~

~~***GUIDEWAY.*** *That portion of the system on which the transit vehicles operate.*~~

~~***OPEN STATION.*** *A station that is constructed in such a manner that it is open to the atmosphere, and smoke and heat are allowed to disperse directly into the atmosphere. The following enclosed areas in open stations are permitted but limited to:*~~

~~*1. Ticket/pass booths not exceeding 150 square feet (13.9 m2) in area.*~~
~~*2. Mechanical and electrical spaces typically not used for human occupancy and necessary for the operation of a fixed guideway transit system. Such spaces shall be limited to two per level.*~~
~~*3. Restrooms not exceeding 150 square feet (13.9 m2) in area. A maximum of four restrooms are permitted per level.*~~

~~***OPERATIONS CONTROL CENTER (OCC) (CENTRAL CONTROL).*** *The operation center where the authority controls and coordinates the system-wide movement of passengers and trains from which communication is maintained with supervisory and operating personnel of the authority, and with participating agencies when required.*~~

~~***POINT OF SAFETY.*** *An enclosed fire exit that leads to a public way or safe location outside the structure, or an at-grade point beyond any enclosing structure, or other area that affords adequate protection for passengers.*~~

~~***POWER SUBSTATION.*** *The location of electric equipment that does not generate electricity but receives and converts or transforms generated energy to usable electric energy.*~~

~~***STATION.*** *A place designated for the purpose of loading and unloading passengers, including patron service areas and ancillary spaces associated with the same structure.*~~

~~***STATION PLATFORM.*** *The area of a station used primarily for loading and unloading transit vehicle passengers.*~~

~~***UNDERGROUND STATION.*** *A station or that part of a station located beneath the surface of the earth or of the water.*~~

~~***433.2Types of Construction.***~~

~~***433.2.1****Unless otherwise specified in this section, buildings or portions of buildings classed as stations of fixed guideway transit systems shall be minimum Type IA, Type IB or Type IIA construction and shall not exceed in area or height the limits specified in Table 503.*~~
~~*Underground stations shall be a minimum Type IA or Type IB constructions.*~~
~~*Open stations may be of Type IIB construction and shall not exceed in area or height as required by Table 503 for Type IIA.*~~

~~***Exception:*** *At-grade structures of open stations with an occupancy load not exceeding 300 persons may be of any construction type permitted by this code.*~~

~~***433.2.2 Mixed occupancies.***~~

~~**433.2.2.1**Stations of fixed guideway transit systems shall be separated from other occupancies in accordance with Table 508.4 for Group A Occupancies.~~

~~**433.2.2.2**The following areas shall be separated from public areas by a two-hour fire barrier:~~

~~1. Electrical control rooms, auxiliary electrical rooms and associated battery rooms~~
~~2. Trash rooms~~
~~3. Train control rooms and associated battery rooms~~
~~4. Fan rooms 5. Emergency generator rooms~~

~~**433.2.2.3** Within station structures, all power substations shall be separated from all other areas by a three-hour fire barrier with no openings to public areas.~~

~~**433.3Access and exit facilities.**~~

~~**433.3.1Occupant load.** The occupant load for a transit station shall be based on the emergency condition requiring evacuation of that station to a point of safety. The station occupant load shall be the sum of the number of persons in the calculated train load of trains entering a station plus the entraining load of persons awaiting train(s), during a specified time period. Notwithstanding, the minimum occupant load shall not be less than the maximum capacity load of a train which would occupy the entire length of the station platform on a single track. Exiting shall be provided for occupant loads recalculated upon increase in service and/ or every five years.~~

~~**433.3.1.1Calculated train load.** The calculated train load is the number of passengers on trains simultaneously entering the station on all tracks in normal traffic direction during the peak 15-minute period. The following limitations to the calculated train load shall be applied: 1. No more than one train will unload at any one track to a platform during an emergency. 2. The load on any single train is limited to the maximum train capacity.~~

~~**433.3.1.2Entraining load (on platform awaiting train).** The entraining load is equal to the number of passengers that would accumulate on the platform in the time period equivalent to two headways or 12 minutes during the peak 15-minute period, whichever time period is greater. This entraining load is constrained as stated as follows:~~

~~1. Special consideration shall be given to stations servicing areas where events occur that establish occupant loads not included in normal passenger loads. These would include such areas as civic centers, sports complexes and convention centers.~~
~~2. At multiplatform stations, each platform shall be considered separately. Arrival of trains from all normal traffic directions, plus their entraining loads, shall be considered.~~
~~3. At concourses, mezzanines or multilevel stations, simultaneous platform loads shall be considered for all exit lanes passing through that area.~~

~~**433.3.2 Exits required.**~~

~~**433.3.2.1Number of exits.** Stations shall have at least two exits placed a distance apart equal to not less than one half of the length of the maximum overall diagonal dimension of the station. Enclosed station platforms shall have a minimum of one exit within 20 feet (6096 mm) from each end. Underground station platforms shall have a minimum of one enclosed exit within 20 feet (6096 mm) from each end. Routes from platform ends into the underground guideway shall not be considered as exits for calculating exiting requirements.~~

~~**433.3.2.2Capacity of exits and station evacuation time.**~~

~~**433.3.2.2.1**Exit capacities shall be calculated on the basis of 22-inch wide (559 mm) exit lanes at the clear and narrowest point except that individual handrails may project into the required width as permitted by Chapter 10. Fractional lanes shall not be counted in measuring exit capacities except that 12 inches (305 mm) added to one or more lanes shall be counted as one-half a lane. Escalators 32 inches (813 mm) in width may be considered as 11/2 lanes.~~

~~**433.3.2.2.2**There shall be sufficient means of exit to evacuate the station occupant load from the station platforms in four minutes or less.~~

~~**433.3.2.2.3** The station shall also be designed to permit evacuation from the most remote point on the platform to a point of safety in six minutes or less.~~

~~**433.3.2.2.4** In at-grade or elevated structures so designed that the station platform is open to the elements and, when the concourse is below or protected from the platform by distance or materials as determined by an appropriate engineering analysis, that concourse may be defined as a point of safety, with Fire Code Official concurrence.~~

~~**433.3.2.2.5** To calculate evacuation time, the walking travel time should be tabulated using the longest exit route and travel speeds. To this time should be added the following factors:~~

~~1. The waiting time at the vertical elements at platform level minus the longest walking travel time at platform level.~~
~~2. The waiting time at the fare collection barriers minus the waiting time at the platform vertical circulation elements.~~
~~3. The waiting time at the vertical or horizontal circulation elements from mezzanine to grade minus the waiting time at the platform vertical circulation elements or fare collection barrier, whichever is greater.~~
~~4. The waiting time, if any, at any additional constriction minus the greatest previous waiting time. (Repeat for all additional constrictions.)~~

~~**Note:** The total of any of the factors in Items 1 through 4 above cannot be less than zero.~~

~~**433.3.3 Exit width and exit lanes.**~~

~~**433.3.3.1** The capacity in persons per minute (ppm), patron travel speeds in feet per minute (fpm) and requirements for exit lanes shall be as follows:~~

~~1. Platforms, corridors and ramps of 1 foot vertical for 20 feet horizontal (5 percent slope) or less:~~
~~Exit corridors, platforms and ramps shall be a minimum clear width of 5 feet (1524 mm). In computing the number of exit lanes available, 1 foot 6 inches (457 mm) shall be deducted at each platform edge and 1 foot (305 mm) at each side wall.~~

~~Per exit lane:~~
~~Capacity – 50 ppm~~
~~Travel speed – 200 fpm~~

~~2. Stairs, stopped escalators and ramps of over 1 foot vertical for 20 feet horizontal (5 percent slope): Exit ramps shall be a minimum clear width of 6 feet (1829 mm). Stopped escalators may be considered as a means of egress, provided they are of nominal 2 feet 8 inches (813 mm) width.~~

~~Per exit lane "up" direction:~~
~~Capacity – 35 ppm~~
~~Travel speed – 50 fpm*~~
~~Per exit lane "down" direction:~~
~~Capacity – 40 ppm~~
~~Travel speed – 60 fpm*~~

~~3. Doors and gates: Gates fitted with approved panic hardware and opening in the direction of exit travel, with minimum nominal width of 3 feet (914 mm) shall be permitted in exit calculation.~~

~~Per doors and gate:~~
~~Capacity – 50 ppm per exit lane~~

~~4. Fare collection gates: Fare collection gates, when deactivated, shall provide a minimum 20 inches (508 mm) clear unobstructed aisle. Console shall not exceed 40 inches (1016 mm) in height.~~

~~Per gate:~~
~~Capacity – 50 ppm~~

~~**Note:** Examples of exiting analysis may be found in Appendix C of NFPA 130, 1995 edition, Standard for Fixed Guideway Transit Systems.~~

~~*Indicates vertical component of travel speed.~~

~~**433.3.4Arrangement of exits.**~~

~~**433.3.4.1Vertical circulation elements shall be comprised of stairs or stair/escalator combinations.** Escalators shall not account for more than half of the units of exit at any one level in the public area. Escalators must be paired in combination with stairs to be included in exiting capacity calculations.~~

~~**433.3.4.2** Because of the possibility of maintenance or malfunction, one escalator at each station shall be considered as being out of service in calculating egress requirements. The escalator chosen shall be that one having the most adverse effect on exiting capacities.~~

~~**433.3.5Distance to exits.** No point of the station platform(s) or mezzanine(s) shall be more than 300 feet (91~~

~~440 mm) from a point of safety.~~

~~**433.3.6Other exits required/guideway access.**~~

~~**433.3.6.1** Access/egress between guideway and platforms shall be provided as follows: 1. Stairs or ramps, 2 feet 10 inches (864 mm) in width minimum, or other arrangement having equivalent capacity, shall be provided at each end of the platform, arranged to provide access/egress to guideway level. 2. Except in underground stations, the access points between the guideway and the platform, and the exit from the platform may be integrated.~~

~~**433.3.6.2** In enclosed stations, escalator and stairway enclosures are not required in the public areas of multilevel transit stations among platform, mezzanine and concourse when the station is provided with an emergency ventilation system.~~

~~**433.3.7 Emergency lighting and exit signs.**~~

~~**433.3.7.1** Emergency lighting and exit signs shall be provided in accordance with Chapter 10. **Exception:** Open stations at grade need not provide emergency lighting or exit signs.~~

~~**433.4**~~**443.2 Special provisions.**

~~**433.4.1**~~**443.2.1 Automatic sprinkler system.** See Section 903.2.17.1.

~~**433.4.2**~~**443.2.2 Station guideway deluge system.** See Section 903.2.17.2.

~~**433.4.3**~~**443.2.3 Standpipe systems.** See Section 905.3.11.

~~**433.4.4 Emergency management panel (EMP).** An EMP shall be required for enclosed and underground stations. Location of the EMP shall be determined by the Fire Code Official. The EMP shall include but not be limited to the following:~~

~~1. Indication of manual pull boxes and automatic smoke detectors~~
~~2. Indication of alarm signals from all suppression systems~~
~~3. Capabilities for using station paging system~~
~~4. Emergency telephone~~
~~5. Escalator controls 6. Emergency ventilation controls 7. Station schematics~~

~~**433.4.5 Emergency ventilation systems.**~~

~~**433.4.5.1 General.** Emergency ventilation shall be provided for enclosed and underground stations for the protection of passengers, employees and emergency personnel.~~

~~**433.4.5.2** These systems shall be designed as follows:~~
~~1. A stream of noncontaminated air is provided to passengers in a path(s) of egress away from a train fire; and~~
~~2. Airflow rates produced toward a train fire in a path of egress are sufficient to prevent back layering of smoke; and~~
~~3. The temperature in a path of egress away from a train fire is limited to 140°F (60°C), or less; and~~

~~*4. The design heat release rate produced by a train fire shall be used to design the emergency ventilation system.*~~

~~***433.4.5.3** Ventilation shaft terminals at grade shall be located to prevent recirculation as follows:*~~

~~*1. Openings for blast relief shafts, and under platform and smoke exhaust shafts at grade shall be separated by a minimum horizontal distance of 40 feet (12 192 mm) from any station entrance, elevator hoistway enclosure, surface emergency stair doorway, unprotected outside air intake or other opening, or from each other. Exhaust outlets that are not used for intakes may be adjacent to each other.*~~
~~*2. Where this distance is not practical, the horizontal distance may be reduced to 15 feet (4572 mm) if the closest blast relief or under platform and smoke exhaust shaft terminal is raised a minimum of 10 feet (3048 mm) above the station entrance, emergency stair doorway and unprotected outside air intake or other opening, or the underplatform and smoke exhaust shaft terminal is raised a minimum of 10 feet (3048 mm) above the blast relief shaft terminal.*~~
~~*3. Ventilation of stations shall not terminate at grade on any vehicle roadway.*~~

~~***433.4.5.4 Emergency ventilation fans.***~~

~~***433.4.5.4.1** Ventilation fans used for emergency service, their motors, dampers and all related components exposed to the ventilation airflow shall be designed to operate in an ambient atmosphere of 482°F (250°C) for a period of at least one hour. Ventilation fans and related components shall be capable of withstanding the maximum anticipated plus/minus pressure transients induced by train operations.*~~

~~***433.4.5.4.2** Local fan motor starters and related operating control devices for emergency ventilation equipment shall be isolated from the ventilation airflow by a separation having a fire-resistance rating of at least one hour.*~~

~~***433.4.5.4.3** Thermal overload protective devices shall not be provided on motor controls of fans used for emergency ventilation.*~~

~~***433.4.5.4.4** The power supply for fans essential for emergency ventilation service shall consist of two separate electrical feeders. Each feeder shall originate from a different source (substation) and shall be separated physically to the extent possible. Automatic transfer shall be provided in the event the normal supply source fails.*~~

~~***433.4.5.4.5** Operation and fail-safe verification for proper operation of emergency fans shall be affected from the operation control center with indication provided for all modes of operation for each fan.*~~

~~***433.4.5.5***~~***443.2.5 Emergency ventilation control.*** *Emergency ventilation systems shall comply with this section and NFPA 130.*

~~***433.4.5.5.1 Local controls shall override remote control.** Local control shall be capable of operating the fans in all modes in the event the remote controls become inoperative.*~~

~~***433.4.5.5.2***~~***443.2.5.1*** *Emergency ventilation systems shall be supervised and/or controlled in all operating modes locally (motor control center and/or fan unit) and remotely at both the ~~OCC~~Operations Control Center and the station ~~EMP~~Fire Command Center.*

~~***433.4.5.5.3***~~***443.2.5.2*** *Fan running shall be provided by sensing devices for each fan for operation in both the supply and exhaust directions.*

~~***433.4.5.5.4***~~***443.2.5.3*** Trouble status signals shall be annunciated in the local control room. A summarized trouble signal shall be annunciated at ~~*OCC*~~*Operations Control Center* and ~~*EMP*~~*Fire Command Center.*

~~***433.4.5.6 Ventilation systems and ancillary areas.** Ancillary area ventilation systems shall be arranged so that air is not exhausted into station public occupancy areas.*~~

~~***433.5***~~***443.2.4 Fire Alarm and Communication Systems.*** *See Section 907.2.26.*

SECTION 903
AUTOMATIC SPRINKLER SYSTEMS

903.2.17 Fixed guideway and passenger rail transit systems.

SECTION 905
STANDPIPE SYSTEMS

905.3.11 Fixed guideway and passenger rail transit systems. *Fixed-guideway and passenger rail transit systems shall be provided with a Class 1 standpipe system in accordance with this section.*

~~905.3.11~~905.3.11.1 ~~Fixed guideway transit systems~~Underground Stations. *Underground stations shall be provided with an automatic ~~class III~~Class I standpipe system. ~~designed to comply with the following:~~*
~~1. Automatically supply 65 pounds per square inch (psi) for each outlet.~~
~~2. Supply a 250 gpm (946 L/m) flow to each of the two most remote 21/2 inch (64 mm) outlets when pressurized through the fire department connection(s).~~

~~905.3.11.1~~905.3.11.2 All other Stations. *All other stations shall be provided with a ~~class~~ Class I ~~manual wet~~ standpipe system~~; a manual dry class I standpipe system may be allowed in areas subject to freezing~~.*

Exception: *Open at-grade stations with unrestricted fire department access need not be provided with a standpipe system.*

SECTION 907
FIRE ALARM AND DETECTION SYSTEMS

907.2.26 Fixed guideway and passenger rail transits systems fire alarm and communication systems.

CHAPTER 35
REFERENCED STANDARDS

130-14 *Standard for Fixed Guideway Transit and Passenger Rail Systems* 443

****NFPA 130, Amended Sections as follows:***

Amend Section 2.2 and amend publications to read as follows:
2.2 NFPA Publications.
NFPA 25, Standard for the Inspection, Testing, and Maintenance of Water-Based Fire Protection Systems, ~~2014~~*2013 California edition.*

Amend Section 3.3.44.2 and amend publications to read as follows:
3.3.44.2* Open Station. A station that is constructed such that it is directly open to the atmosphere and smoke and heat are allowed to disperse directly into the atmosphere.
The following enclosed areas in open stations are permitted:

1. Ticket/pass booths not exceeding 150 square feet (13.9 m2) in area.
2. Mechanical and electrical spaces typically not used for human occupancy and necessary for the operation of a fixed guideway transit system. Such spaces shall be limited to two per level.
3. Restrooms not exceeding 150 square feet (13.9 m2) in area. A maximum of four restrooms are permitted per level.

Add a new definition as 3.3.44.3 to read as follows:
3.3.44.1.1 Underground Station. *A station or portion thereof that is located beneath the surface of the earth or of the water.*

Amend Section 5.2.2.1 to read as follows:
5.2.2.1 Building construction for all new enclosed stations shall be not less than ~~Type I or Type II or combinations of Type I and Type II noncombustible construction as defined in NFPA 220, in accordance with the requirements of NFPA 101, Chapter 12~~ *Type IA, Type IB or Type IIA construction and shall not exceed in area or height the limits specified in the California Building Code Table 503*, for the station configuration or as determined by fire hazard analysis of potential fire exposure hazards to the structure.

Add Section 5.2.2.1.1 –5.2.2.1.3 to read as follows:

5.2.2.1.1 Underground stations shall be a minimum Type IA or Type IB constructions.

5.2.2.1.2 Open stations may be of Type IIB construction and shall not exceed in area or height as required by Table 503 for Type IIA.

5.2.2.1.3 Open at grade stations may be of any construction type allowed by the California Building Code.

Delete Section 5.2.2.2.
~~*5.2.2.2 Other types of construction as defined in NFPA 220 shall be permitted for open stations in accordance with the provisions of NFPA101, Chapter 12, for corresponding station configurations.*~~

Amend Section 5.2.4.3 to read as follows:
5.2.4.3 Ancillary Spaces. Fire resistance ratings of separations between ancillary occupancies shall be established as required by *the California Building Code* ~~NFPA 101 and in accordance with ASTM E 119 and ANSI/UL 263~~.

Amend Section 5.2.4.3.1 to read as follows:
5.2.4.3.1 The following areas shall be separated by a two-hour fire barrier:
1. Electrical control rooms, auxiliary electrical rooms and associated battery rooms
2. Trash rooms
3. Train control rooms and associated battery rooms
4. Fan rooms
5. Emergency generator rooms

Amend Section 5.2.4.5 to read as follows:
5.2.4.5* Separation Between System and Nonsystem Occupancies. All station public areas shall be ~~fire~~ separated from adjacent non-system occupancies.*by a one hour fire barrier, unless otherwise required by other provisions of the California Building Code.*

Amend Section 5.3.1.1 to read as follows:
5.3.1.1 The provisions for means of egress for a station shall comply with Chapter~~s 7 and 12 of NFPA 101~~*10 of the California Building Code*, except as herein modified.

Amend Section 5.3.2.1 to read as follows:
5.3.2.1* The occupant load for a station shall be based on the train load of trains simultaneously entering the station on all tracks in normal traffic direction plus the simultaneous entraining load awaiting trains.
(1) The train load shall consider only one train at any one track.
(2) The basis for calculating train and entraining loads shall be the peak period ridership figures as projected for design of a new system or as updated for an operating system.
(3) Exiting shall be provided for occupant loads recalculated upon increase in service and/ or every five years.

Amend Section 5.3.3.5 to read as follows:
5.3.3.5 Travel Distance. The maximum travel distance on the platform to a point at which a means of egress route leaves the platform shall not exceed ~~100 m (325 ft)~~ *91 440 mm (300 feet).*

Amend Section 5.3.3.7 to read as follows:
5.3.3.7 Alternate Egress. At least two means of egress remote from each other shall be provided from each station platform as follows:
(1)*A means of egress used as a public circulation route shall be permitted to provide more than 50 percent of the required egress capacity from a station platform or other location.
(2) Means of egress from separate platforms shall be permitted to converge.
(3) Where means of egress routes from separate platforms converge, the subsequent capacity of the egress route shall be sufficient to maintain the required evacuation time from the incident platform.
(4) Enclosed station platforms shall have a minimum of one exit within 2.5 times the least width of the enclosed station platform up to a maximum of 50 feet (insert mm) from each end.
(5) Routes from platform ends into the underground guideway shall not be considered as exits for calculating exiting requirements.

Amend Section 5.3.11.1 to read as follows:
5.3.11.1 Illumination of the means of egress in stations, including escalators that are considered a means of egress, shall be in accordance with ~~Section 7.8 of NFPA 101~~ *Chapter 10* of the California Building Code.

Amend Section 5.3.11.2 to read as follows:
5.3.11.2 Means of egress, including escalators considered as means of egress, shall be provided with a system of emergency lighting in accordance with ~~Section 7.9 of NFPA 101~~ *Chapter 10* of the California Building Code.

Amend Section 5.4.1.1 to read as follows:
5.4.1.1 Enclosed stations shall be provided with a fire command center in accordance with ~~NFPA 72~~*Section 911.1.1 through 911.5 of the California Building Code*.

Amend Section 5.4.4.1 to read as follows:
5.4.4.1* An automatic sprinkler protection system shall be provided ~~in areas of stations used for concessions, in storage areas, in trash rooms, and other similar areas with combustible loadings, except trainways~~*where required by Section 903 of the California Building Code*.

Delete Section 5.4.4.2.
~~**5.4.4.2** Sprinkler protection shall be permitted to be omitted in areas of open stations remotely located from public spaces.~~

Amend Section 5.4.5.1 to read as follows:
5.4.5.1* Class I standpipes shall be installed ~~in enclosed stations~~ *where required by Chapter 9 of the California Building Code* in accordance with NFPA 14 except as modified herein.

Amend Section 7.3.2.1 to read as follows:
7.3.2.1 The fan inlet airflow hot temperature shall be determined by an engineering analysis, however, this temperature shall not be less than ~~150~~*482*°C (~~302~~*250*°F). *Ventilation fans and related components shall be capable of withstanding the maximum anticipated plus/minus pressure transients induced by train operations.*

Add Section 7.6.1.1 to read as follows:
7.6.1.1 *Ventilation of stations shall not terminate at grade on any vehicle roadway.*

Amend Section 7.7.1 to read as follows:
7.7.1 Operation of the emergency ventilation system components shall be *capable of automatic and manual initiation* ~~initiated from the operations control center~~ *in accordance with 909.12.3 of the California Building Code*.

Amend Section 7.8.1 to read as follows:
7.8.1 The design of the power for the emergency ventilation system shall comply with the requirements of Article 700 of ~~NFPA 70~~*the California Electrical Code and Section 909 of the California Building Code*.

Notation:
Authority: Health and Safety Code Sections 13108, 13143, 13143.9, 13146, 17921, 18949.2
References: Health and Safety Code Sections 13143, 18949.2

[44. Group I-3 Separation]

SECTION 508
MIXED USE AND OCCUPANCY

508.2.4 Separation of occupancies. No separation is required between accessory occupancies and the main occupancy.

Exceptions:
1.Group H-2, H-3, H-4, ~~and~~ H-5, ~~*I-2, I-2.1, I-3*~~ *and L* occupancies shall be separated from all other occupancies in accordance with Section 508.4.

2.Group I-1, R-1, R-2, *R-2.1* and R-3 dwelling units and sleeping units shall be separated from other dwelling or sleeping units and from accessory occupancies contiguous to them in accordance with the requirements of Section 420.
3. No separation is required between Group B, E, R-2 sleeping units and S-2 occupancies accessory to Group I-2, I-2.1 and I-3 of Type I Construction.

508.3.3 Separation. No separation is required between nonseparated occupancies.

Exceptions:
1. Group H-2, H-3, H-4, ~~and~~ H-5, ~~*I-2, I-2.1, I-3*~~ *and L* occupancies shall be separated from all other occupancies in accordance with Section 508.4.
2. Group R-1, R-2, *R-2.1* and R-3 dwelling units and sleeping units shall be separated from other dwelling or sleeping units and from other occupancies contiguous to them in accordance with the requirements of Section 420.
3. No separation is required between Group B, E, R-2 sleeping units and S-2 occupancies accessory to Group I-2, I-2.1 and I-3 of Type I Construction.

Notation:
Authority: Health and Safety Code Sections 13108, 13143, 13143.9, 13146, 17921, 18949.2
References: Health and Safety Code Sections 13143, 18949.2

[45. OSHPD/SFM I-2 Updates]

407.2.1 Waiting and similar areas. Waiting areas and similar spaces constructed as required for corridors shall be permitted to be open to a corridor, only where all of the following criteria are met:

1. The spaces are not occupied as care recipient's sleeping rooms, treatment rooms, incidental uses ~~in accordance with Section 509~~*listed in Table 509*, or hazardous uses.
2. The open space is protected by an automatic ~~fire~~*smoke* detection system installed in accordance with Section 907.
3. The *corridors* onto which the spaces open, in the same *smoke compartment*, are protected by an automatic ~~fire~~*smoke* detection system installed in accordance with Section 907, ~~or~~*and* the *smoke compartment* in which the spaces are located is equipped throughout with quick-response sprinklers in accordance with Section 903.3.2.
4. The space is arranged so as not to obstruct access to the required exits.
5. Each space is located to permit direct visual supervision by the facility staff.

407.2.3 Psychiatric treatment areas. Areas wherein psychiatric care recipients who are not capable of self-preservation are housed, or group meeting or multipurpose therapeutic spaces other than incidental uses in accordance with Section 509, under continuous supervision by facility staff, shall be permitted to be open to the corridor, where the following criteria are met:

1. Each area does not exceed 1,500 square feet (140 m2).
2. The area is located to permit supervision by the facility staff.
3. The area is arranged so as not to obstruct any access to the required exits.
4. The area is equipped with an automatic ~~fire~~*smoke* detection system installed in accordance with Section 907.2.
5. Not more than one such space is permitted in any one smoke compartment.
6. The walls and ceilings of the space are constructed as required for corridors.

407.2.5 Nursing home housing units. In Group I-2~~, Condition 1~~, occupancies, in areas where nursing home residents are housed, shared living spaces, group meeting or multipurpose therapeutic spaces shall be permitted to be open to the corridor, where all of the following criteria are met:
1. The walls and ceilings of the space are constructed as required for corridors.
2. The spaces are not occupied as resident sleeping rooms, treatment rooms, incidental uses in accordance with Section 509, or hazardous uses.
3. The open space is protected by an automatic ~~fire~~*smoke* detection system installed in accordance with Section 907.

4. The corridors onto which the spaces open, in the same smoke compartment, are protected by an automatic ~~fire~~*smoke* detection system installed in accordance with Section 907, ~~or~~*and* the smoke compartment in which the spaces are located is equipped throughout with quick-response sprinklers in accordance with Section 903.3.2.
5. The space is arranged so as not to obstruct access to the required exits.
6. Each space is located to permit direct visual supervision by the facility staff.

407.2.6 Nursing home cooking facilities. In Group I-2, ~~Condition 1,~~ occupancies, rooms or spaces that contain a cooking facility with domestic cooking appliances shall be permitted ~~to be open to the corridor~~ *in fully sprinklered buildings* where all of the following criteria are met:
1. The number of care recipients housed in the smoke compartment is not greater than 30.
2. The number of care recipients served by the cooking facility is not greater than 30.
3. Only one cooking facility area is permitted in a smoke compartment.
4. The types of domestic cooking appliances permitted are limited to ovens, cooktops, ranges, warmers and microwaves.
~~5. The corridor is a clearly identified space delineated by construction or floor pattern, material or color.~~
~~6. The space containing the domestic cooking facility shall be arranged so as not to obstruct access to the required exit.~~
~~7.~~*5.* A domestic cooking *range* hood installed and constructed in accordance with ~~Section 505 of~~ the ~~International~~*California* Mechanical Code is provided over the cooktop or range.
~~8. The domestic cooking hood provided over the cooktop or range shall be equipped with an automatic fire-extinguishing system of a type recognized for protection of domestic cooking equipment. Preengineered automatic extinguishing systems shall be tested in accordance with UL 300A and listed and labeled for the intended application. The system shall be installed in accordance with this code, its listing and the manufacturer's instructions.~~
~~9. A manual actuation device for the hood suppression system shall be installed in accordance with Sections 904.12.1 and 904.12.2.~~
~~10. An interlock device shall be provided such that upon activation of the hood suppression system, the power or fuel supply to the cooktop or range will be turned off.~~
~~11. A shut off for the fuel and electrical power supply to the cooking equipment shall be provided in a location that is accessible only to staff.~~
~~12. A timer shall be provided that automatically deactivates the cooking appliances within a period of not more than 120 minutes.~~
~~13.~~*6.* A portable fire extinguisher shall be installed in accordance with Section 906 of the ~~International~~*California* Fire Code.

407.3.1 Corridor doors. *In fully sprinklered buildings,* ~~C~~corridor doors, other than those in a wall required to be rated by Section 509.4 or for the enclosure of a vertical opening or an exit, shall not have a required fire protection rating ~~and shall not be required to be equipped with self-closing or automatic closing devices~~, but shall provide an effective barrier to limit the transfer of smoke and shall be equipped with positive latching. *In Group I-2 Occupancies, self-closing or automatic-closing devices are not required on corridor doors to patient sleeping rooms and treatment rooms,* ~~*and offices*~~ *located in areas specified in Sections 1224 and 1225*~~*, excluding offices specified in Sections 1224.21 and 1225.8*~~. Roller latches are not permitted. Other doors shall conform to Section 716.5.

407.3.2 Glazing. *In fully sprinklered buildings, fixed fully tempered or laminated glass in wood or metal frames may be used in corridor walls, provided the glazed area does not exceed 25 percent of the areas of the corridor wall of the room. The total area of glass in corridor walls is not limited when the glazing is fixed* ~~*1/4-inch-thick (6.4 mm) wired glass*~~ *1/3-hour fire-protection-rated glazing in* ~~*steel*~~*approved frames and the size of individual glazed panel does not exceed 1,296 square inches (0.836 m2).*

407.4.1.1 Locking devices. Locking devices that restrict access to a care recipient's room from the corridor and that are operable only by staff from the corridor side shall not restrict the means of egress from the care recipient's room.

Exceptions:
~~1.~~ This section shall not apply to rooms in psychiatric treatment and similar care areas.
~~2. Locking arrangements in accordance with Section 1010.1.9.6.~~

407.4.4.3 Access to corridor. *Movement from habitable rooms shall be in accordance with Sections 407.4.4.3.1, 407.4.4.3.2 and 407.4.4.5.3.*

407.4.4.3.1 One intervening room. Movement from habitable rooms shall not require passage through more than ~~three doors~~*one intervening room* and 100 feet (30 480 mm) distance of travel within the *care* suite.

~~**Exception:** The distance of travel shall be permitted to be increased to 125 feet (38 100 mm) where an automatic smoke detection system is provided throughout the care suite and installed in accordance with NFPA 72.~~

407.4.4.3.2 Two intervening rooms. *Movement from habitable rooms other than sleeping rooms located within a care suite, shall not require passage through more than two intervening rooms and 50 (15 240 mm) feet distance of exit access travel within the care suite.*

Exception: *The distance of travel shall be permitted to be increased to 100 feet (38 100 mm) where an automatic fire sprinkler system is provided throughout the Group I-2 fire area and an automatic smoke detection system is provided throughout the care suite and installed in accordance with NFPA 72.*

407.4.4.5 Care suites containing sleeping room areas. Sleeping rooms shall be permitted to be grouped into care suites where ~~one of~~ the following criteria is met:

1. The care suite is not used as an exit access for more than eight care recipient beds.
2. The arrangement of the care suite allows for direct and constant visual supervision into the sleeping rooms by care providers.
~~3. An automatic smoke detection system is provided in the sleeping rooms and installed in accordance with NFPA 72.~~

407.4.4.5.1 Area. Care suites containing sleeping rooms shall be not greater than ~~7,500~~*5,000* square feet (~~696~~*465* m2) in area.

Exceptions:
1. Care suites containing sleeping rooms shall be permitted to be not greater than 7,500 square feet (696 m2) in area where an automatic fire sprinkler system is provided throughout the Group I-2 fire area.
2. Care suites containing sleeping rooms shall be permitted to be not greater than 10,000 square feet (929 m2) in area *an automatic fire sprinkler system is provided throughout the Group I-2 fire area and* where an automatic smoke detection system is provided throughout the care suite and installed in accordance with ~~NFPA 72~~*Section 907*.

407.4.4.5.3 Travel distance. The travel distance between any point in a care suite containing sleeping rooms and an exit access door from that care suite shall be not greater than 100 feet (30 480 mm).

407.4.4.6.1 Area. Care suites of rooms, other than sleeping rooms, shall have an area not greater than ~~12,500~~*10,000* square feet (~~1161~~*929* m2).

~~**Exception:** Care suites not containing sleeping rooms shall be permitted to be not greater than 15,000 square feet (1394 m2) in area where an automatic smoke detection system is provided throughout the care suite in accordance with Section 907.~~

407.4.4.6.2 Exit access. *Any room or care suite*~~Care suites~~, other than sleeping rooms, with an area of more than 2,500 square feet (232 m2) shall have no fewer than two exit access doors from the *room or* care suite located in accordance with Section 1007.1.

407.5 Smoke barriers. Smoke barriers shall be provided to subdivide every story used by persons receiving care, treatment or sleeping and to divide other stories with an occupant load of 50 or more persons, *regardless of occupancy or use*, into no fewer than two smoke compartments. Such stories shall be divided into smoke compartments with an area of not more than 22,500 square feet (2092 m2~~) in Group I-2, Condition 1, and not more than 40,000 square feet (3716 m2) in Group I-2, Condition 2,~~ and the distance of travel from any point in a smoke compartment to a smoke barrier door shall be not greater than 200 feet (60 960 mm). The smoke barrier shall be in accordance with Sections 709 *and 909.5*.

Exceptions:
1. This requirement shall not apply to Group I-2.1 less than 10,000 ft2 (929 m2).
2. An area in an adjoining occupancy shall be permitted to serve as a smoke compartment for a Group I-2.1 facility if the following criteria are met:
2.1. The separating wall and both compartments meet the requirements of 407.5.

2.2. The Group I-2.1 is less than 22,500 ft2 (2100 m2).
2.3. Access from the Group I-2.1 to the other occupancy is unrestricted.
3. This requirement shall not apply to the following:
3.1. Any story, not containing a Group I-2 or I-2.1 occupancy, that is located above a story containing a Group I-2 or I-2.1 occupancy.

3.2. Areas that do not contain a Group I-2 or I-2.1 occupancy, where such areas are separated from the Group I-2 or I-2.1 occupancy by a horizontal exit in accordance with Section 1025.2.

3.3. Any story, not containing a Group I-2 or I-2.1 occupancy, that is located more than one story below a story containing a Group I-2 or I-2.1 occupancy.

3.4. Any story housing only mechanical equipment where such story is located below a story containing a Group I-2 or I-2.1 occupancy and is separated from the story above by a horizontal assembly having not less than a 2 hour fire resistance-rating.

TABLE 508.4
REQUIRED SEPARATION OF OCCUPANCIES (HOURS)

OCCUPANCY	A, E		I-4, *R-2.1*		I-2, *I-2.1*		*I-3*		R-*1, R-2, R-3, R-3.1, R-4*		F-2, S-2[b], U		B[f], F-1[e,f], ~~M[e]~~ M, S-1		*L*		H-1		H-2		H-3, H-4,		H-5	
	S	NS	S	NS	S	NS	S	NS	S	NS	S	NS	S	NS	*S*	*NS*	S	NS	S	NS	S	NS	S	NS
A, E	N	N	2	2	2	NP	2	*NP*	1	2	N	1	1	2	2	*NP*	NP	NP	3	4	2	3[a]	2	NP
I-4, *R-2.1*	—	—	*1[e]*	*NP*	2	NP	2	*NP*	1	NP	~~2~~1	2	~~2~~1	2	2	*NP*	NP	NP	*4*	NP	*4*	NP	*4*	NP
I-2, *I-2.1*	—	—	—	—	N	*NP*	2	*NP*	2	NP	2	NP	2	NP	2	*NP*	NP	NP	*4*	NP	*4*	NP	*4*	NP
I-3	—	—	—	—	—	—	*N*	*NP*	2	*NP*	2	2	2	2	2	*NP*	*NP*	*NP*	*4*	*NP*	*4*	*NP*	*4*	NP
R-*1, R-2, R-3, R-3.1, R-4*	—	—	—	—	—	—	—	—	N	N	1[c]	2[c]	1	2	*4*	*NP*	NP	NP	3	NP	2	NP	2	NP
F-2, S-2[b], U	—	—	—	—	—	—	—	—	—	—	N	N	1	2	*1*	*NP*	NP	NP	3	4	2	3[a]	2	NP
B, F-1, M, S-1	—	—	—	—	—	—	—	—	—	—	—	—	N	N	*1*	*NP*	NP	NP	2	3	1	2[a]	1	NP
L	—	—	—	—	—	—	—	—	—	—	—	—	—	—	*1*	*NP*	*NP*	*NP*	2	*NP*	*1*	*NP*	*1*	*NP*
H-1	—	—	—	—	—	—	—	—	—	—	—	—	—	—	—	—	N	NP	NP	NP	NP	NP	NP	NP
H-2	—	—	—	—	—	—	—	—	—	—	—	—	—	—	—	—	—	—	N	NP	1	NP	1	NP
H-3, H-4	—	—	—	—	—	—	—	—	—	—	—	—	—	—	—	—	—	—	—	—	1[d]	NP	1	NP
H-5	—	—	—	—	—	—	—	—	—	—	—	—	—	—	—	—	—	—	—	—	—	—	N	NP

S = Buildings equipped throughout with an automatic sprinkler system installed in accordance with Section 903.3.1.1.
NS = Buildings not equipped throughout with an automatic sprinkler system installed in accordance with Section 903.3.1.1.
N = No separation requirement.
NP = Not permitted.
a See Section 420.
b. The required separation from areas used only for private or pleasure vehicles shall be reduced by 1 hour but to not less than 1 hour.
c. See Section 406.3.4.
d. Separation is not required between occupancies of the same classification.
~~g~~e. *[SFM] Group I and F1 occupancies and Group R-2.1 and F-1 occupancies shall have a 3 hour separation.*
f. [SFM] Commercial kitchens not associated with cafeterias and similar dining facilities in Group I-2, and Group R-2.1 shall have a 2-hour separation and shall be protected by an automatic sprinkler system.

1367

509.3 Area limitations. *The aggregate floor area of* Incidental uses shall not occupy more than 10 percent of the building area of the story in which they are located.

905.7.2 Locking cabinet doors. Cabinets shall be unlocked.

Exceptions:
1. Visual identification panels of glass or other approved transparent frangible material that is easily broken and allows access.
2. Approved locking arrangements.
3. Group I-3 *and in mental health areas of Group I-2 occupancies*.

906.1 Where required. Portable fire extinguishers shall be installed in all of the following locations:

1. In Group A, B, E, F, H, I, *L*, M, R-1, R-2, *R-2.1, R-3.1,* R-4 and S occupancies.

Exception: In Group R-2 occupancies, portable fire extinguishers shall be required only in locations specified in Items 2 through 6 where each dwelling unit is provided with a portable fire extinguisher having a minimum rating of 1-A:10-B:C.

2. Within 30 feet (9144 mm) of commercial cooking equipment.
3. In areas where flammable or combustible liquids are stored, used or dispensed.
4. On each floor of structures under construction, except Group R-3 occupancies, in accordance with Section 3315.1 of the ~~*International*~~*California Fire Code*.
5. Where required by the ~~*International*~~*California Fire Code* sections indicated in Table 906.1.
6. Special-hazard areas, including but not limited to laboratories, computer rooms and generator rooms, where required by the fire code official.
7. Large and small family day-care homes shall be equipped with a portable fire extinguisher having a minimum 2A10BC rating.
8. Where required by California Code of Regulations, Title 19, Division 1.
9. Within 30 feet (9144 mm) of domestic cooking equipment located in a Group I-2.

906.2 General requirements. Portable fire extinguishers shall be selected and installed in accordance with this section and ~~NFPA 10~~ *California Code of Regulations, Title 19, Division 1, Chapter 3.*

Exceptions:
1. The distance of travel to reach an extinguisher shall not apply to the spectator seating portions of Group A-5 occupancies.
2. In Group I-3 *and in mental health areas of Group I-2*, portable fire extinguishers shall be permitted to be located at staff locations.

907.5.2.3 Visible alarms. Visible alarm notification appliances shall be provided in accordance with Sections 907.5.2.3.1 through ~~907.5.2.3.3~~*907.5.2.3.4*.

Exceptions:
1. *In other than Group I-2 and I-2.1,* visible alarm notification appliances are not required in *alterations*, except where an existing fire alarm system is upgraded or replaced, or a new fire alarm system is installed.
2. Visible alarm notification appliances shall not be required in ~~exits as defined in Chapter 2~~*enclosed exit stairways, enclosed exit ramps, exterior exit stairs and exterior exit ramps.*
3. Visible alarm notification appliances shall not be required in elevator cars.
~~4. Visual alarm notification appliances are not required in critical care areas of Group I-2 Condition 2 occupancies that are in compliance with Section 907.2.6, Exception 2.~~

909.5.3 Opening protection. Openings in smoke barriers shall be protected by *self-closing devices or* automatic-closing devices actuated by the required controls for the mechanical smoke control system. Door openings shall be protected by fire door assemblies complying with Section 716.5.3.

Exceptions:

1. Passive smoke control systems with automatic- closing devices actuated by spot-type smoke detectors *listed* for releasing service installed in accordance with Section 907.3. *When used in a Group I-2 or a I-2.1, such detectors shall activate the fire alarm system and shall close all the smoke barrier doors within the effected zone.*
2. Fixed openings between smoke zones that are protected utilizing the airflow method *in other than Group I-2 or I-2.1.*
3. In ~~Group I-1 Condition 2,~~ Group I-2*, I-2.1, R-2.1* and ambulatory care facilities, where a pair of opposite swinging doors are installed across a corridor in accordance with Section 909.5.3.1, the doors shall not be required to be protected in accordance with Section 716. The doors shall be closefitting within operational tolerances and shall not have a center mullion or undercuts in excess of ¾ inch (19.1 mm), louvers or grilles. The doors shall have head and jamb stops and astragals or rabbets at meeting edges~~ and, where permitted by the door manufacturer's listing, positive-latching devices are not required~~. *Positive-latching devices are required. Doors installed across corridors shall comply with Section 1010.1.1.*
4. In Group I-2*, I-2.1,* and ambulatory care facilities, where such doors are special-purpose horizontal sliding, accordion or folding door assemblies installed in accordance with Section 1010.1.4.3 and are automatic closing by smoke detection in accordance with Section 716.5.9.3. *The doors shall be close fitting within operational tolerances, and shall not have undercuts in excess of ¾-inch (19.1 mm), louvers or grilles. Where permitted by the manufacturer's listing, positive-latching devices are not required. Doors installed across corridors shall comply with Section 1010.1.1.*
5. Group I-3.
6. Openings between smoke zones with clear ceiling heights of 14 feet (4267 mm) or greater and bank-down capacity of greater than 20 minutes as determined by the design fire size.
7. In Group I-2 or I-2.1., smoke damper activation may be accomplished by a fire alarm control unit provided that an open area smoke detection system is provided within all areas served by an HVAC system.

909.5.3.1 ~~Group I-1 Condition 2;~~ Group I-2*, I-2.1, R-2.1,* and ambulatory care facilities. In ~~Group I-1 Condition 2,~~ Group I-2*, I-2.1, R-2.1,* and ambulatory care facilities, where doors are installed across a corridor, the doors shall be automatic-closing by smoke detection in accordance with Section 716.5.9.3 ~~and shall have a vision panel with fire protection-rated glazing materials in fire protection- rated frames, the area of which shall not exceed that tested~~. *Vision panels consisting of fire-rated glazing in approved frames shall be provided in each cross-corridor swinging door and at each cross-corridor horizontal-sliding door in a smoke barrier.*

1003.3.1 Headroom. Protruding objects are permitted to extend below the minimum ceiling height required by Section 1003.2 provided a minimum headroom of 80 inches (2032 mm) shall be provided for any walking surface, including walks, corridors, aisles and passageways. *In other than Group I-2 and Group I-2.1 occupancies,* ~~Not more than~~ 50 percent of the ceiling area of a means of egress shall be *permitted to be* reduced in height by protruding objects.

Exception: Door closers and stops shall not reduce headroom to less than 78 inches (1981 mm).

A barrier shall be provided where the vertical clearance is less than 80 inches (2032 mm) high. The leading edge of such a barrier shall be located 27 inches (686 mm) maximum above the floor.

~~**1008.1.1**~~**1010.1.1 Size of doors.** The required capacity of each door opening shall be sufficient for the occupant load thereof and shall provide a minimum clear width of 32 inches (813 mm). Clear openings of doorways with swinging doors shall be measured between the face of the door and the stop, with the door open 90 degrees (1.57 rad). Where this section requires a minimum clear width of 32 inches (813 mm) and a door opening includes two door leaves without a mullion, one leaf shall provide a clear opening width of 32 inches (813 mm). The maximum width of a swinging door leaf shall be 48 inches (1219 mm) nominal. Means of egress doors in a Group I-2 *or I-2.1* occupancy used for the movement of beds *and ~~litter~~stretcher patients* shall provide a clear width not less than ~~41.5~~ *44 inches* (~~1054~~1118 mm). The height of door openings shall be not less than 80 inches (2032 mm).

Exceptions:
1. The minimum and maximum width shall not apply to door openings that are not part of the required means of egress in Group R-2 and R-3 occupancies.
2. Door openings to resident sleeping units in Group I-3 occupancies shall have a clear width of not less than 28 inches (711 mm).
3. Door openings to storage closets less than 10 square feet (0.93 m2) in area shall not be limited by the minimum width.
4. Width of door leafs in revolving doors that comply with Section 1010.1.4.1 shall not be limited.

5. Door openings within a dwelling unit or sleeping unit shall be not less than 78 inches (1981 mm) in height.
6. Exterior door openings in dwelling units and sleeping units, other than the required exit door, shall be not less than 76 inches (1930 mm) in height.
7. In other than Group R-1 occupancies, the minimum widths shall not apply to interior egress doors within a dwelling unit or sleeping unit that is not required to be an Accessible unit, Type A unit or Type B unit.
8. Door openings required to be accessible within Type B units shall have a minimum clear width of 31.75 inches (806 mm).
9. Doors to walk-in freezers and coolers less than 1,000 square feet (93 m2) in area shall have a maximum width of 60 inches (1524 mm).
10. In Group R-1 dwelling units or sleeping units not required to be Accessible units, the minimum width shall not apply to doors for showers or saunas.

[Editorial Note: Relocate existing amendments from Section 1010.1.2 to 1010.1.2.1 due to section split.]
1010.1.2 Door swing. Egress doors shall be of the pivoted or side-hinged swinging type.

Exceptions:
1. Private garages, office areas, factory and storage areas with an occupant load of 10 or less.
2. Group I-3 occupancies used as a place of detention.
3. Critical or intensive care patient rooms within suites of health care facilities.
4. Doors within or serving a single dwelling unit in Groups R-2 and R-3.
5. In other than Group H occupancies, revolving doors complying with Section 1010.1.4.1.
6. In other than Group H occupancies, special purpose horizontal sliding, accordion or folding door assemblies complying with Section 1010.1.4.3.
7. Power-operated doors in accordance with Section 1010.1.4.2.
8. Doors serving a bathroom within an individual sleeping unit in Group R-1.
9. In other than Group H occupancies, manually operated horizontal sliding doors are permitted in a means of egress from spaces with an occupant load of 10 or less.
10. In I-2 and I-2.1 occupancies, exit doors serving an occupant load of ~~10~~50 or more, ~~may~~ shall not be of the pivoted or balanced type.

~~Doors shall swing in the direction of egress travel where serving a room or area containing an occupant load of 50 or more persons or a Group H occupancy. For Group L occupancies, see Section 443.6.2.~~

~~In a Group I-2 occupancy, all required exterior egress doors shall open in the direction of egress regardless of the occupant load served.~~

~~1008.1.10~~**1010.1.10 Panic and fire exit hardware.** Doors serving a Group H occupancy and doors serving rooms or spaces with an occupant load of 50 or more in a Group A ~~or E~~ occupancy, *assembly area not classified as an assembly occupancy, E, I-2 or I-2.1 occupancies* shall not be provided with a latch or lock other than panic hardware or fire exit hardware. *For Group L occupancies see Section ~~443.6.3~~453.6.3.*

Exceptions:
1. A main exit of a Group A occupancy shall be permitted to be locking in accordance with Section 1010.1.9.3, Item 2.
2. Doors serving a Group A or E occupancy shall be permitted to be electromagnetically locked in accordance with Section 1010.1.9.9.

Electrical rooms with equipment rated ~~1,200~~800 amperes or more and over 6 feet (1829 mm) wide, and that contain overcurrent devices, switching devices or control devices with exit or exit access doors, shall be equipped with panic hardware or fire exit hardware. The doors shall swing in the direction of egress travel.

~~1009.4~~**1011.2 Width and capacity.** The required capacity of stairways shall be determined as specified in Section 1005.1, but the minimum width shall be not less than 44 inches (1118 mm). See Section 1009.3 for accessible means of egress stairways.

Exceptions:
1. Stairways serving an occupant load of less than 50 shall have a width of not less than 36 inches (914 mm).
2. Spiral stairways as provided for in Section 1011.10.
3. Where an incline platform lift or stairway chairlift is installed on stairways serving occupancies in Group R-3, or within dwelling units in occupancies in Group R-2, a clear passage width not less than 20 inches (508 mm) shall be

provided. Where the seat and platform can be folded when not in use, the distance shall be measured from the folded position.

Means of egress stairs in a Group I-2 or I-2.1 occupancy used for the movement of beds and ~~litter~~stretcher patients shall provide a clear width not less than 44 inches (1118 mm).

~~1014.2~~1016.2 Egress through intervening spaces. Egress through intervening spaces shall comply with this section.

1. Exit access through an enclosed elevator lobby is permitted *in other than a Group I-2 and I-2.1*. Access to not less than one of the required exits shall be provided without travel through the enclosed elevator lobbies required by Section 3006. Where the path of exit access travel passes through an enclosed elevator lobby, the level of protection required for the enclosed elevator lobby is not required to be extended to the exit unless direct access to an exit is required by other sections of this code.

2. Egress from a room or space shall not pass through adjoining or intervening rooms or areas, except where such adjoining rooms or areas and the area served are accessory to one or the other, are not a Group H occupancy and provide a discernible path of egress travel to an exit.
Exception: Means of egress are not prohibited through adjoining or intervening rooms or spaces in a Group H, S or F occupancy where the adjoining or intervening rooms or spaces are the same or a lesser hazard occupancy group.

3. An exit access shall not pass through a room that can be locked to prevent egress.
4. Means of egress from dwelling units or sleeping areas shall not lead through other sleeping areas, toilet rooms or bathrooms.

5. Egress shall not pass through kitchens, storage rooms, closets or spaces used for similar purposes.
Exceptions:
1. Means of egress are not prohibited through a kitchen area serving adjoining rooms constituting part of the same dwelling unit or sleeping unit.

2. Means of egress are not prohibited through stockrooms in Group M occupancies where all of the following are met:
2.1. The stock is of the same hazard classification as that found in the main retail area.
2.2. Not more than 50 percent of the exit access is through the stockroom.
2.3. The stockroom is not subject to locking from the egress side.
2.4. There is a demarcated, minimum 44-inch-wide (1118 mm) aisle defined by full- or partial-height fixed walls or similar construction that will maintain the required width and lead directly from the retail area to the exit without obstructions.

~~5.~~6. Exits shall not pass through any room subject to locking except in Group I-3 occupancies classified as detention facilities.

~~1018.1~~1020.1 Construction. Corridors shall be fire-resistance rated in accordance with Table 1020.1. The corridor walls required to be fire-resistance rated shall comply with Section 708 for fire partitions.

Exceptions:
1. A fire-resistance rating is not required for corridors in an occupancy in Group E where each room that is used for instruction has not less than one door opening directly to the exterior and rooms for assembly purposes have not less than one-half of the required means of egress doors opening directly to the exterior. Exterior doors specified in this exception are required to be at ground level.
2. A fire-resistance rating is not required for corridors contained within a dwelling unit or sleeping unit in an occupancy in Group~~s I-1 and~~ R.
3. A fire-resistance rating is not required for corridors in open parking garages.
4. A fire-resistance rating is not required for corridors in an occupancy in Group B that is a space requiring only a single means of egress complying with Section 1006.2.
5. Corridors adjacent to the exterior walls of buildings shall be permitted to have unprotected openings on unrated exterior walls where unrated walls are permitted by Table 602 and unprotected openings are permitted by Table 705.8.

6. A fire-resistance rating is not required for corridors within suites in a Group I-2 or I-2.1 ~~occupancy provided with an automatic sprinkler system throughout and~~ constructed in accordance with Section ~~407.4.3.5~~407.4.4.5 or ~~407.4.3.6~~407.4.4.6.

Notation:
Authority: Health and Safety Code Sections 13108, 13143, 13143.9, 13146, 17921, 18949.2
References: Health and Safety Code Sections 13143, 18949.2

PART 2

[46. The SFM proposes to bring forward previously existing California building standards or amendments, which represent no change in their effect from the 2013 California Building Code and is displayed for context and for the convenience of code users. Furthermore, the SFM proposes to codify non-substantive editorial and formatting amendments from the format based upon the 2012 International Building Code to the format of the 2015 International Building Code.]

CHAPTER 1

SCOPE AND ADMINISTRATION

DIVISION I
CALIFORNIA ADMINISTRATION

SECTION 1.1
GENERAL

1.1.2 Purpose. *The purpose of this code is to establish the minimum requirements to safeguard the public health, safety and general welfare through structural strength, means of egress facilities, stability, access to persons with disabilities, sanitation, adequate lighting and ventilation, and energy conservation; safety to life and property from fire and other hazards attributed to the built environment; and to provide safety to fire fighters and emergency responders during emergency operations.*

1.1.3 Scope. *The provisions of this code shall apply to the construction, alteration, movement, enlargement, replacement, repair, equipment, use and occupancy, location, maintenance, removal and demolition of every building or structure or any appurtenances connected or attached to such buildings or structures throughout the State of California.*

1.1.3.1 Nonstate-regulated buildings, structures, and applications. *Except as modified by local ordinance pursuant to Section 1.1.8, the following standards in the California Code of Regulations, Title 24, Parts 2, 2.5, 3, 4, 5, 6, 9, 10 and 11 shall apply to all occupancies and applications not regulated by a state agency.*

1.1.4 Appendices. *Provisions contained in the appendices of this code shall not apply unless specifically adopted by a state agency or adopted by a local enforcing agency in compliance with Health and Safety Code Section 18901 et. seq. for Building Standards Law, Health and Safety Code Section 17950 for State Housing Law and Health and Safety Code Section 13869.7 for Fire Protection Districts. See Section 1.1.8 of this code.*

1.1.5 Referenced codes. *The codes, standards and publications adopted and set forth in this code, including other codes, standards and publications referred to therein are, by title and date of publication, hereby adopted as standard reference documents of this code. When this code does not specifically cover any subject related to building design and construction, recognized architectural or engineering practices shall be employed. The National Fire Codes, standards, and the Fire Protection Handbook of the National Fire Protection Association are permitted to be used as authoritative guides in determining recognized fire prevention engineering practices.*

1.1.6 Nonbuilding standards, orders and regulations. *Requirements contained in the Uniform Mechanical Code or in any other referenced standard, code or document, which are not building standards as defined in Health and Safety Code Section 18909, shall not be construed as part of the provisions of this code. For nonbuilding standards, orders, and regulations, see other titles of the California Code of Regulations.*

1.1.7 Order of precedence and use.

1.1.7.1 Differences. *In the event of any differences between these building standards and the standard reference documents, the text of these building standards shall govern.*

1.1.7.2 Specific provisions. *Where a specific provision varies from a general provision, the specific provision shall apply.*

1.1.8 City, County, or City and County amendments, additions or deletions. *The provisions of this code do not limit the authority of city, county, or city and county governments to establish more restrictive and reasonably necessary differences to the provisions contained in this code pursuant to complying with Section 1.1.8.1. The effective date of amendments, additions, or deletions to this code by a city, county, or city and county filed pursuant to Section 1.1.8.1 shall be the date filed. However, in no case shall the amendments, additions, or deletions to this code be effective any sooner than the effective date of this code.*

Local modifications shall comply with Health and Safety Code Section 18941.5 for Building Standards Law, Health and Safety Code Section 17958 for State Housing Law or Health and Safety Code Section 13869.7 for Fire Protection Districts.

1.1.9 Effective date of this code. *Only those standards approved by the California Building Standards Commission that are effective at the time an application for building permit is submitted shall apply to the plans and specifications for, and to the construction performed under, that permit. For the effective dates of the provisions contained in this code, see the History Note page of this code.*

1.1.11 Format. *This part fundamentally adopts the International Building Code by reference on a chapter-by-chapter basis. When a specific chapter of the International Building Code is not printed in the code and is marked "Reserved" such chapter of the International Building Code is not adopted as a portion of this code. When a specific chapter of the International Building Code is marked "Not adopted by the State of California" but appears in the code, it may be available for adoption by local ordinance.*

Note: *Matrix Adoption Tables at the front of each chapter may aid the code user in determining which chapter or sections within a chapter are applicable to buildings under the authority of a specific state agency, but they are not to be considered regulatory.*

1.1.12 Validity. *If any chapter, section, subsection, sentence, clause, or phrase of this code is for any reason held to be unconstitutional, contrary to statute, exceeding the authority of the state as stipulated by statutes or otherwise inoperative, such decision shall not affect the validity of the remaining portion of this code.*

SECTION 1.11
OFFICE OF THE STATE FIRE MARSHAL

1.11.1 SFM—Office of the State Fire Marshal. *Specific scope of application of the agency responsible for enforcement, the enforcement agency and the specific authority to adopt and enforce such provisions of this code, unless otherwise stated.*

Application:
Institutional, educational or any similar occupancy. Any building or structure used or intended for use as an asylum, jail, mental hospital, hospital, sanitarium, home for the aged, children's nursery, children's home, school or any similar occupancy of any capacity.

Authority cited*—Health and Safety Code Section 13143.*
Reference*—Health and Safety Code Section 13143.*

Assembly or similar place of assemblage. *Any theater, dancehall, skating rink, auditorium, assembly hall, meeting hall, nightclub, fair building or similar place of assemblage where 50 or more persons may gather together in a building, room or structure for the purpose of amusement, entertainment, instruction, deliberation, worship, drinking or dining, awaiting transportation, or education.*

Authority cited*—Health and Safety Code Section 13143.*

Reference—*Health and Safety Code Section 13143.*

Small family day-care homes.

Authority cited—*Health and Safety Code Sections 1597.45, 1597.54, 13143 and 17921.*
Reference—*Health and Safety Code Section 13143.*

Large family day-care homes.

Authority cited—*Health and Safety Code Sections 1597.46, 1597.54 and 17921.*
Reference—*Health and Safety Code Section 13143.*

Residential facilities and residential facilities for the elderly.

Authority cited—*Health and Safety Code Section 13133.*
Reference—*Health and Safety Code Section 13143.*

Any state institution or other state-owned or state-occupied building.

Authority cited—*Health and Safety Code Section 13108.*
Reference—*Health and Safety Code Section 13143.*

High-rise structures.

Authority cited—*Health and Safety Code Section 13211.*
Reference—*Health and Safety Code Section 13143.*

Motion picture production studios.

Authority cited—*Health and Safety Code Section 13143.1.*
Reference—*Health and Safety Code Section 13143.*

Organized camps.

Authority cited—*Health and Safety Code Section 18897.3.*
Reference—*Health and Safety Code Section 13143.*

Residential. *All hotels, motels, lodging houses, apartment houses and dwellings, including congregate residences and buildings and structures accessory thereto. Multiple-story structures existing on January 1, 1975, let for human habitation, including and limited to, hotels, motels and apartment houses, less than 75 feet (22 860 mm) above the lowest floor level having building access, wherein rooms used for sleeping are let above the ground floor.*

Authority cited—*Health and Safety Code Sections 13143.2 and 17921.*
Reference—*Health and Safety Code Section 13143.*

Residential care facilities. *Certified family care homes, out-of-home placement facilities, halfway houses, drug and/or alcohol rehabilitation facilities and any building or structure used or intended for use as a home or institution for the housing of any person of any age when such person is referred to or placed within such home or institution for protective social care and supervision services by any governmental agency.*

Authority cited—*Health and Safety Code Section 13143.6.*
Reference—*Health and Safety Code Section 13143.*

Tents, awnings *or other fabric enclosures used in connection with any occupancy.*

Authority cited—*Health and Safety Code Section 13116.*
Reference—*Health and Safety Code Section 13143.*

Fire alarm devices, equipment and systems *in connection with any occupancy.*

***Authority cited**—Health and Safety Code Section 13114.*
***Reference**—Health and Safety Code Section 13143.*

Hazardous materials.

***Authority cited**—Health and Safety Code Section 13143.9.*
***Reference**—Health and Safety Code Section 13143.*

Flammable and combustible liquids.

***Authority cited**—Health and Safety Code Section 13143.6.*
***Reference**—Health and Safety Code Section 13143.*

Public school automatic fire detection, alarm and sprinkler systems.

***Authority cited**—Health and Safety Code Section 13143 and California Education Code Article 7.5, Sections 17074.50, 17074.52 and 17074.54.*
***Reference**—Government Code Section 11152.5, Health and Safety Code Section 13143 and California Education Code Chapter 12.5, Leroy F. Greene School Facilities Act of 1998, Article 1.*

Wildland-Urban interface fire area.

***Authority cited**—Health and Safety Code Sections 13143, 13108.5(a) and 18949.2(b) and (c) and Government Code Section 51189.*
***Reference**—Health and Safety Code Sections 13143, Government Code Sections 51176, 51177, 51178 and 51179 and Public Resources Code Sections 4201 through 4204.*

1.11.2 Duties and powers of the enforcing agency.

1.11.2.1 Enforcement.

***1.11.2.1.1** The responsibility for enforcement of building standards adopted by the State Fire Marshal and published in the California Building Standards Code relating to fire and panic safety and other regulations of the State Fire Marshal shall except as provided in Section 1.11.2.1.2 be as follows:*

1. The city, county, or city and county with jurisdiction in the area affected by the standard or regulation shall delegate the enforcement of the building standards relating to fire and panic safety and other regulations of the State Fire Marshal as they relate to Group R-3 occupancies, as described in Section 1.1.3.1 or CCR, Part 2 California Building Code,, Section 310.1, to either of the following:

1.1. The chief of the fire authority of the city, county or city and county, or an authorized representative.
1.2. The chief building official of the city, county or city and county, or an authorized representative.

2. The chief of any city or county fire department or of any fire protection district, and authorized representatives, shall enforce within the jurisdiction the building standards and other regulations of the State Fire Marshal, except those described in Item 1 or 4.
3. The State Fire Marshal shall have authority to enforce the building standards and other regulations of the State Fire Marshal in areas outside of corporate cities and districts providing fire protection services.
4. The State Fire Marshal shall have authority to enforce the building standards and other regulations of the State Fire Marshal in corporate cities and districts providing fire protection services on request of the chief fire official or the governing body.
5. Any fee charged pursuant to the enforcement authority of this section shall not exceed the estimated reasonable cost of providing the service for which the fee is charged pursuant to Section 66014 of the Government Code.

***1.11.2.1.2** Pursuant to Health and Safety Code Section 13108, and except as otherwise provided in this section, building standards adopted by the State Fire Marshal published in the California Building Standards Code relating to fire and panic safety shall be enforced by the State Fire Marshal in all state-owned buildings, state-occupied buildings and state institutions throughout the state. Upon the written request of the chief fire official of any city, county, or fire*

protection district, the State Fire Marshal may authorize such chief fire official and his or her authorized representatives, in their geographical area of responsibility, to make fire prevention inspections of state-owned or state-occupied buildings, other than state institutions, for the purpose of enforcing the regulations relating to fire and panic safety adopted by the State Fire Marshal pursuant to this section and building standards relating to fire and panic safety published in the California Building Standards Code. Authorization from the State Fire Marshal shall be limited to those fire departments or fire districts which maintain a fire prevention bureau staffed by paid personnel.

Pursuant to Health and Safety Code Section 13108, any requirement or order made by any chief fire official who is authorized by the State Fire Marshal to make fire prevention inspections of state-owned or state-occupied buildings, other than state institutions, may be appealed to the State Fire Marshal. The State Fire Marshal shall, upon receiving an appeal and subject to the provisions of Chapter 5 (commencing with Section 18945) of Part 2.5 of Division 13 of the Health and Safety Code, determine if the requirement or order made is reasonably consistent with the fire and panic safety regulations adopted by the State Fire Marshal and building standards relating to fire and panic safety published in the California Building Code.

Any person may request a code interpretation from the State Fire Marshal relative to the intent of any regulation or provision adopted by the State Fire Marshal. When the request relates to a specific project, occupancy or building, the State Fire Marshal shall review the issue with the appropriate local enforcing agency prior to rendering such code interpretation.

***1.11.2.1.3** Pursuant to Health and Safety Code Section 13112, any person who violates any order, rule or regulation of the State Fire Marshal is guilty of a misdemeanor punishable by a fine of not less than $100.00 or more than $500.00, or by imprisonment for not less than six months, or by both. A person is guilty of a separate offense each day during which he or she commits, continues or permits a violation of any provision of, or any order, rule or regulation of, the State Fire Marshal as contained in this code.*

Any inspection authority who, in the exercise of his or her authority as a deputy State Fire Marshal, causes any legal complaints to be filed or any arrest to be made shall notify the State Fire Marshal immediately following such action.

***1.11.2.2 Right of entry.** The fire chief of any city, county or fire protection district, or such person's authorized representative, may enter any state institution or any other state-owned or state-occupied building for the purpose of preparing a fire suppression preplanning program or for the purpose of investigating any fire in a state-occupied building.*

The State Fire Marshal, his or her deputies or salaried assistants, the chief of any city or county fire department or fire protection district and his or her authorized representatives may enter any building or premises not used for dwelling purposes at any reasonable hour for the purpose of enforcing this chapter. The owner, lessee, manager or operator of any such building or premises shall permit the State Fire Marshal, his or her deputies or salaried assistants and the chief of any city or county fire department or fire protection district and his or her authorized representatives to enter and inspect them at the time and for the purpose stated in this section.

1.11.2.3 More restrictive fire and panic safety building standards.

***1.11.2.3.1** Any fire protection district organized pursuant to Health and Safety Code Part 2.7 (commencing with Section 13800) of Division 12 may adopt building standards relating to fire and panic safety that are more stringent than those building standards adopted by the State Fire Marshal and contained in the California Building Standards Code. For these purposes, the district board shall be deemed a legislative body and the district shall be deemed a local agency. Any changes or modifications that are more stringent than the requirements published in the California Building Standards Code relating to fire and panic safety shall be subject to Section 1.1.8.1.*

***1.11.2.3.2** Any fire protection district that proposes to adopt an ordinance pursuant to this section shall, not less than 30 days prior to noticing a proposed ordinance for public hearing, provide a copy of that ordinance, together with the adopted findings made pursuant to Section 1.11.2.3.1, to the city, county, or city and county where the ordinance will apply. The city, county, or city and county may provide the district with written comments, which shall become part of the fire protection district's public hearing record.*

***1.11.2.3.3** The fire protection district shall transmit the adopted ordinance to the city, county, or city and county where the ordinance will apply. The legislative body of the city, county, or city and county may ratify, modify or deny an adopted ordinance and transmit its determination to the district within 15 days of the determination. Any modification*

or denial of an adopted ordinance shall include a written statement describing the reasons for any modifications or denial. No ordinance adopted by the district shall be effective until ratification by the city, county, or city and county where the ordinance will apply. Upon ratification of an adopted ordinance, the city, county, or city and county shall file a copy of the findings of the district, and any findings of the city, county, or city and county, together with the adopted ordinance expressly marked and identified to which each finding refers, in accordance with Section 1.1.8.1:3.

1.11.2.4 Request for alternate means of protection. *Requests for approval to use an alternative material, assembly or materials, equipment, method of construction, method of installation of equipment or means of protection shall be made in writing to the enforcing agency by the owner or the owner's authorized representative and shall be accompanied by a full statement of the conditions. Sufficient evidence or proof shall be submitted to substantiate any claim that may be made regarding its conformance. The enforcing agency may require tests and the submission of a test report from an approved testing organization as set forth in Title 19, California Code of Regulation, to substantiate the equivalency of the proposed alternative means of protection.*

When a request for alternate means of protection involves hazardous materials, the authority having jurisdiction may consider implementation of the findings and recommendations identified in a Risk Management Plan (RMP) developed in accordance with Title 19, Division 2, Chapter 4.5, Article 3.

Approval of a request for use of an alternative material, assembly of materials, equipment, method of construction, method of installation of equipment or means of protection made pursuant to these provisions shall be limited to the particular case covered by request and shall not be construed as establishing any precedent for any future request.

1.11.2.5 Appeals. *When a request for an alternate means of protection has been denied by the enforcing agency, the applicant may file a written appeal to the State Fire Marshal for consideration of the applicant's proposal. In considering such appeal, the State Fire Marshal may seek the advice of the State Board of Fire Services. The State Fire Marshal shall, after considering all of the facts presented, including any recommendations of the State Board of Fire Services, determine if the proposal is for the purposes intended, at least equivalent to that specified in these regulations in quality, strength, effectiveness, fire resistance, durability and safety, and shall transmit such findings and any recommendations to the applicant and to the enforcing agency.*

1.11.3 Construction documents.

1.11.3.1 Public schools. *Plans and specifications for the construction, alteration or addition to any building owned, leased or rented by any public school district shall be submitted to the Division of the State Architect.*

1.11.3.2 Movable walls and partitions. *Plans or diagrams shall be submitted to the enforcing agency for approval before the installation of, or rearrangement of, any movable wall or partition in any occupancy. Approval shall be granted only if there is no increase in the fire hazard.*

1.11.3.3 New construction high-rise buildings.

1. Complete plans or specifications, or both, shall be prepared covering all work required to comply with new construction high-rise buildings. Such plans and specifications shall be submitted to the enforcing agency having jurisdiction.
2. All plans and specifications shall be prepared under the responsible charge of an architect or a civil or structural engineer authorized by law to develop construction plans and specifications, or by both such architect and engineer. Plans and specifications shall be prepared by an engineer duly qualified in that branch of engineering necessary to perform such services. Administration of the work of construction shall be under the charge of the responsible architect or engineer except that where plans and specifications involve alterations or repairs, such work of construction may be administered by an engineer duly qualified to perform such services and holding a valid certificate under Chapter 7 (commencing with Section 65700) of Division 3 of the Business and Professions Code for performance of services in that branch of engineering in which said plans, specifications and estimates and work of construction are applicable.

This section shall not be construed as preventing the design of fire-extinguishing systems by persons holding a C-16 license issued pursuant to Division 3, Chapter 9, Business and Professions Code. In such instances, however, the responsibility charge of this section shall prevail.

1.11.3.4 Existing high-rise buildings.

1. Complete plans or specifications, or both, shall be prepared covering all work required by ~~Section 3412~~California Fire Code Chapter 11 and California Existing Building Code for existing high-rise buildings. Such plans or specifications shall be submitted to the enforcing agency having jurisdiction.
2. When new construction is required to conform with the provisions of these regulations, complete plans or specifications, or both, shall be prepared in accordance with the provisions of this subsection. As used in this section, "new construction" is not intended to include repairs, replacements or minor alterations which do not disrupt or appreciably add to or affect the structural aspects of the building.

1.11.3.5 Retention of plans. *Refer to Building Standards Law, Health and Safety Code Sections 19850 and 19851 for permanent retention of plans.*

1.11.4 Fees. 1.11.4.1 Other fees. *Pursuant to Health and Safety Code Section 13146.2, a city, county or district which inspects a hotel, motel, lodging house or apartment house may charge and collect a fee for the inspection from the owner of the structure in an amount, as determined by the city, county or district, sufficient to pay its costs of that inspection.*

1.11.4.2 Large family day-care. *Pursuant to Health and Safety Code Section 1597.46, Large Family Day-Care Homes, the local government shall process any required permit as economically as possible, and fees charged for review shall not exceed the costs of the review and permit process.*

1.11.4.3 High-rise. *Pursuant to Health and Safety Code Section 13217, High-rise Structure Inspection: Fees and costs, a local agency which inspects a high-rise structure pursuant to Health and Safety Code Section 13217 may charge and collect a fee for the inspection from the owner of the high-rise structure in an amount, as determined by the local agency, sufficient to pay its costs of that inspection.*

1.11.4.4 Fire clearance preinspection. *Pursuant to Health and Safety Code Section 13235, Fire Clearance Preinspection, fee, upon receipt of a request from a prospective licensee of a community care facility, as defined in Section 1502, of a residential care facility for the elderly, as defined in Section 1569.2, or of a child day-care facility, as defined in Section 1596.750, the local fire enforcing agency, as defined in Section 13244, or State Fire Marshal, whichever has primary jurisdiction, shall conduct a preinspection of the facility prior to the final fire clearance approval. At the time of the preinspection, the primary fire enforcing agency shall price consultation and interpretation of the fire safety regulations and shall notify the prospective licensee of the facility in writing of the specific fire safety regulations which shall be enforced in order to obtain fire clearance approval. A fee equal to, but not exceeding, the actual cost of the preinspection services may be charged for the preinspection of a facility with a capacity to serve 25 or fewer persons. A fee equal to, but not exceeding, the actual cost of the preinspection services may be charged for a preinspection of a facility with a capacity to serve 26 or more persons.*

1.11.4.5 Care facilities. *The primary fire enforcing agency shall complete the final fire clearance inspection for a community care facility, residential care facility for the elderly, or child day-care facility within 30 days of receipt of the request for the final inspection, or as of the date the prospective facility requests the final prelicensure inspection by the State Department of Social Services, whichever is later.*

Pursuant to Health and Safety Code Section 13235, a preinspection fee equal to, but not exceeding, the actual cost of the preinspection services may be charged for a facility with a capacity to serve 25 or less clients. A fee equal to, but not exceeding, the actual cost of the preinspection services may be charged for a preinspection of a facility with a capacity to serve 26 or more clients.

Pursuant to Health and Safety Code Section 13131.5, a reasonable final inspection fee, not to exceed the actual cost of inspection services necessary to complete a final inspection may be charged for occupancies classified as residential care facilities for the elderly (RCFE).

Pursuant to Health and Safety Code Section 1569.84, neither the State Fire Marshal nor any local public entity shall charge any fee for enforcing fire inspection regulations pursuant to state law or regulation or local ordinance, with respect to residential care facilities for the elderly (RCFE) which service six or fewer persons.

1.11.4.6 Requests of the Office of the State Fire Marshal. *Whenever a local authority having jurisdiction requests that the State Fire Marshal perform plan review and/or inspection services related to a building permit, the applicable fees for such shall be payable to the Office of the State Fire Marshal.*

1.11.5 Inspections. *Work performed subject to the provisions of this code shall comply with the inspection requirements of Sections ~~109.1, 109.3, 109.3.4, 109.3.5, 109.3.6, 109.3.8, 109.3.9, 109.3.10 109.5 and 109.6~~ 110.1, 110.3, 110.3.4, 110.3.5, 110.3.6, 110.3.8, 110.3.9, 110.3.10 110.5 and 110.6 as adopted by the Office of the State Fire Marshal.*

1.11.5.1 Existing Group I-1 or R occupancies. *Licensed 24-hour care in a Group I-1 or R occupancy in existence and originally classified under previously adopted state codes shall be reinspected under the appropriate previous code, provided there is no change in the use or character which would place the facility in a different occupancy group.*

1.11.6 Certificate of Occupancy. *A Certificate of Occupancy shall be issued as specified in Section 111.*

Exception: *Group R, Division 3 and Group U occupancies.*

1.11.7 Temporary structures and uses. *See Section ~~107~~108.*

1.11.8 Service utilities. *See Section 112.*

1.11.9 Stop work order. *See Section 115.*

1.11.10 Unsafe buildings, structures and equipment. *See Section 116.*

DIVISION II
SCOPE AND ADMINISTRATION

Note: *Sections adopted or amended by state agencies are specifically indicated by an agency banner or indicated in the Matrix Adoption Table.*

101.2 Scope. The provisions of this code shall apply to the construction, alteration, relocation, enlargement, replacement, repair, equipment, use and occupancy, location, maintenance, removal and demolition of every building or structure or any appurtenances connected or attached to such buildings or structures.

Exception: Detached one- and two-family dwellings and multiple single-family dwellings (townhouses) not more than three stories above grade plane in height with a separate means of egress, and their accessory structures not more than three stories above grade plane in height, shall comply with the ~~International~~*California* Residential Code.

101.4.1 Gas. The provisions of the ~~International Fuel Gas~~*California Mechanical Code* shall apply to the installation of gas piping from the point of delivery, gas appliances and related accessories as covered in this code. These requirements apply to gas piping systems extending from the point of delivery to the inlet connections of appliances and the installation and operation of residential and commercial gas appliances and related accessories.

101.4.2 Mechanical. The provisions of the ~~International~~*California Mechanical Code* shall apply to the installation, alterations, repairs and replacement of mechanical systems, including equipment, appliances, fixtures, fittings and/or appurtenances, including ventilating, heating, cooling, air-conditioning and refrigeration systems, incinerators and other energy-related systems.

101.4.3 Plumbing. The provisions of the ~~International~~*California Plumbing Code* shall apply to the installation, *alteration*, repair and replacement of plumbing systems, including equipment, appliances, fixtures, fittings and appurtenances, and where connected to a water or sewage system and all aspects of a medical gas system. The provisions of the International Private Sewage Disposal Code shall apply to private sewage disposal systems.

101.4.5 Fire prevention. The provisions of the ~~*International*~~*California Fire Code* shall apply to matters affecting or relating to structures, processes and premises from the hazard of fire and explosion arising from the storage, handling or use of structures, materials or devices; from conditions hazardous to life, property or public welfare in the occupancy of structures or premises; and from the construction, extension, repair, alteration or removal of fire suppression, automatic sprinkler systems and alarm systems or fire hazards in the structure or on the premises from occupancy or operation.

101.4.6 Energy. The provisions of the ~~*International*~~*California Energy* ~~*Conservation*~~ *Code, Title 24, Part 6* shall apply to all matters governing the design and construction of buildings for energy efficiency.

101.4.7 Existing buildings. The provisions of the ~~International~~*California Existing Building Code* shall apply to matters governing the repair, alteration, change of occupancy, addition to and relocation of existing buildings.

102.6 Existing structures. The legal occupancy of any structure existing on the date of adoption of this code shall be permitted to continue without change, except as otherwise specifically provided in this code, the ~~International~~*California Existing Building Code*, the International Property Maintenance Code or the ~~International~~*California* Fire Code.

102.6.1 Buildings not previously occupied. A building or portion of a building that has not been previously occupied or used for its intended purpose in accordance with the laws in existence at the time of its completion shall comply with the provisions of the ~~*International*~~*California Building Code* or ~~*International*~~*California Residential Code*, as applicable, for new construction or with any current permit for such occupancy.

102.6.2 Buildings previously occupied. The legal occupancy of any building existing on the date of adoption of this code shall be permitted to continue without change, except as otherwise specifically provided in this code, the ~~*International*~~*California* Fire Code or International Property Maintenance Code, or as is deemed necessary by the building official for the general safety and welfare of the occupants and the public.

116.5 Restoration. Where the structure or equipment determined to be unsafe by the building official is restored to a safe condition, to the extent that repairs, alterations or additions are made or a change of occupancy occurs during the restoration of the structure, such repairs, alterations, additions and change of occupancy shall comply with the requirements of Section 105.2.2 and the ~~International~~*California Existing Building Code*.

CHAPTER 2
DEFINITIONS

201.3 Terms defined in other codes. Where terms are not defined in this code and are defined in the ~~*International*~~*California Energy* ~~Conservation~~ *Code*, ~~International Fuel Gas Code,~~ ~~*International*~~*California Fire Code*, ~~*International*~~*California Mechanical Code* or ~~*International*~~*California Plumbing Code*, such terms shall have the meanings ascribed to them as in those codes.

201.4 Terms not defined. Where terms are not defined through the methods authorized by this section, such terms shall have ordinarily accepted meanings such as the context implies.

For applications listed in Section 1.11 regulated by the Office of the State Fire Marshal, where terms are not defined through the methods authorized by this section, such terms shall have ordinarily accepted meanings such as the context implies. Webster's Third New International Dictionary of the English Language, Unabridged, shall be considered as providing ordinarily accepted meanings.

AGED HOME OR INSTITUTION. *A facility used for the housing of persons 65 years of age or older in need of care and supervision. (See definition of "care and supervision")*

BEDRIDDEN PERSON. *A person, requiring assistance in turning and repositioning in bed, or being unable to independently transfer to and from bed, except in facilities with appropriate and sufficient care staff, mechanical devices if necessary, and safety precautions as determined in Title 22 regulations, by the Director of Social Services or his or her designated representative. Persons who are unable to independently transfer to and from bed, but who do not need assistance to turn or reposition in bed, shall be considered nonambulatory.*

The Director of Social Services or his or her designated representative shall make the determination of the bedridden status of persons with developmental disabilities, in consultation with the Director of Developmental Services or his or her designated representative.

The Director of Social Services or his or her designated representative shall make the determination of the bedridden status of all other persons with disabilities who are not developmentally disabled.

BUILDING. Any structure used or intended for supporting or sheltering any use or occupancy.

Note: *Building shall have the same meaning as defined in Health and Safety Code Section 17920 and 18908 for the applications specified in Section 1.11.*

CARE AND SUPERVISION. *Any one or more of the following activities provided by a person or facility to meet the needs of the clients:*
Assistance in dressing, grooming, bathing and other personal hygiene.
Assistance with taking medication.
Central storing and/or distribution of medications.
Arrangement of and assistance with medical and dental care.
Maintenance of house rules for the protection of clients.
Supervision of client schedules and activities.
Maintenance and/or supervision of client cash resources or property.
Monitoring food intake or special diets.
Providing basic services required by applicable law and regulation to be provided by the licensee in order to obtain and maintain a community-care facility license.

CATASTROPHICALLY INJURED. *As termed, means a person whose origin of disability was acquired through trauma or nondegenerative neurologic illness, for whom it has been determined by the Department of Health Services Certification and Licensing that active rehabilitation would be beneficial.*

CELL (~~**Group I-3 occupancy**~~***Detention or correctional facility***) ~~A room within a housing unit in a detention or correctional facility used to confine inmates or prisoners.~~ ***[SFM].*** *A sleeping or housing unit in a detention or correctional facility for the confinement of not more than two inmates or prisoners.*

CELL COMPLEX. *A cluster or group of cells or dormitories in a jail, prison or other detention facility, together with rooms used for accessory purposes, all of which open into the cell complex, and are used for functions such as dining, counseling, exercise, classrooms, sick call, visiting, storage, staff offices, control rooms or similar functions, and interconnecting corridors all within the cell complex.*

CELL TIERS. *Cells, dormitories and accessory spaces. Cell tiers are located one level above the other, and do not exceed two levels per floor. A cell tier shall not be considered a story or mezzanine.*

CENTRAL CONTROL BUILDING. *A secure building within a prison where the fire and life safety systems, communication systems, security systems and exterior lighting systems are monitored and where security operations necessitate the remote locking of required means of egress or at the door with a key to maintain a high security area.*

CHARTER SCHOOL *A Charter School is a public school providing instruction from kindergarten through 12th grade, established pursuant to Education Code, Title 2, Division 4, Part 26.8, section 47600, et seq.*

CHILD CARE CENTER. *Any facility of any capacity other than a large or small family day-care home as defined in these regulations in which less than 24-hour-per-day nonmedical supervision is provided for children in a group setting.*

CHILD OR CHILDREN. *A person or persons under the age of 18 years.*

CHRONICALLY ILL. *See "Terminally ill."*

CLIMATE ZONE. A geographical region that has been assigned climatic criteria as specified in Chapters 3CE and 3RE of the ~~International~~*California Energy* ~~Conservation~~ *Code.*

CLINIC, OUTPATIENT. Buildings or portions thereof used to provide medical care on less than a 24-hour basis to persons who are not *classified as nonambulatory or bedridden or* rendered incapable of self-preservation by the services provided.

COMMUNITY CARE FACILITY. *Community care facility means any facility, place, or building that is maintained and operated to provide nonmedical residential care, day treatment, adult day care, or foster family agency services for children, adults, or children and adults, including, but not limited to, the physically handicapped, mentally impaired,*

incompetent persons, and abused or neglected children, and includes the following as defined in Health and Safety Code Section 1502:

1. Residential facility
2. Adult day program
3. Therapeutic day services facility
4. Foster family agency
5. Foster family home
6. Small family home
7. Social rehabilitation facility
8. Community treatment facility
9. Full-service adoption agency
10. Noncustodial adoption agency
11. Transitional shelter care facility
12. Transitional housing placement facility

~~**CONGREGATE LIVING FACILITIES.** A building or part thereof that contains sleeping units where residents share bathroom or kitchen facilities.~~

CONGREGATE RESIDENCE. *Any building or portion thereof that contains facilities for living, sleeping and sanitation, as required by this code, and may include facilities for eating and cooking, for occupancy by other than a family. A congregate residence may be a shelter, convent, monastery, dormitory, fraternity or sorority house, but does not include jails, hospitals, nursing homes, hotels or lodging houses.*

CONTROL AREA. Spaces within a building where quantities of hazardous materials not exceeding the maximum allowable quantities per control area are stored, dispensed, used or handled. See the definition of "Outdoor control area" in the ~~International~~*California Fire Code.*

COURTROOM DOCK. *Courtroom Dock shall mean an area within a courtroom where persons may be restrained and are awaiting court proceedings.*

COURTHOUSE HOLDING FACILITY [SFM]. *Courthouse Holding Facility shall mean a room, cell, cell complex or building for the confinement of persons for the purpose of a court appearance for a period not to exceed 12 hours.*

DAY BOX. A portable magazine designed to hold explosive materials constructed in accordance with the requirements for a Type 3 magazine as defined and classified in Chapter 56 of the ~~International~~*California* Fire Code.

DAY-CARE. *For the purposes of these regulations, means the care of persons during any period of a 24-hour day where permanent sleeping accommodations are not provided.*

Note: *"Daycare" shall not be construed to preclude the use of cots or mats for napping purposes, provided all employees, attendants and staff personnel are awake and on duty in the area where napping occurs.*

DAY-CARE HOME, FAMILY. *A home that regularly provides care, protection and supervision for 14 or fewer children, in the provider's own home, for periods of less than 24 hours per day, while the parents or guardians are away, and is either a large family day-care home or a small family day-care home.*

DAY-CARE HOME, LARGE FAMILY. *A provider's own home which is licensed to provide day care for periods less than 24 hours per day for nine to 14 persons, including children under the age of 10 years who reside at the home.*

DAY-CARE HOME, SMALL FAMILY. *A home which provides family day-care to eight or fewer children, including children under the age of 10 years who reside at the home, in the provider's own home, for periods of less than 24 hours per day. Small family day-care homes are exempted from state fire and life safety regulations other than those state and local standards applicable to Group R-3 occupancies. (See Health and Safety Code, Section 13143 (b).)*

DAY ROOM. *A room which is adjacent to a cell, or cell tier, or dormitory and which is used as a dining, exercise or other activity room for inmates.*

DETENTION ELEVATOR [SFM]. *Detention Elevator shall mean an elevator which moves in-custody individuals within a secure and restrained environment.*

DETENTION TREATMENT ROOM. [SFM]. *Detention Treatment Room shall mean a lockable room or rooms within Group I-3 occupancies used for recreational therapy, group rooms, interdisciplinary treatment team rooms, and interview rooms not classified solely as an Group I-2 occupancy*

DETOXIFICATION FACILITIES. Facilities that provide treatment for substance abuse serving care recipients who are incapable of self-preservation *or classified as non-ambulatory or bedridden* or who are harmful to themselves or others.

DORMITORY. A space in a building where group sleeping accommodations are provided in one room, or in a series of closely associated rooms, for persons not members of the same family group, under joint occupancy and single management, as in college dormitories or fraternity houses.
[SFM] *For Group I-3 occupancies "Dormitory" is an area occupied by no less than three inmates.*

[Editorial Note: Definition relocated from 2013 CBC 406.9.1]
ELECTRIC VEHICLE. ~~*See Section 406.7.*~~ *An automotive-type vehicle for highway use, such as passenger automobiles, buses, trucks, vans and the like, primarily powered by an electric motor that draws current from a rechargeable storage battery, fuel cell, photovoltaic array or other source of electric current. For the purpose of this chapter, electric motorcycles and similar type vehicles and off-road self-propelled electric vehicles such as industrial trucks, hoists, lifts, transports, golf carts, airline ground support equipment, tractors, boats and the like, are not included.*

ENFORCING AGENCY. *Enforcing Agency is the designated department or agency as specified by statute or regulation.*

FIRE APPLIANCE. [SFM] *The apparatus or equipment provided or installed for use in the event of an emergency.*

FIRE-SMOKE BARRIER. [SFM] *A fire-resistance-rated wall assembly of materials designed to restrict the spread of fire in which continuity is maintained in accordance with Section 707 and that is designed and constructed to restrict the movement of smoke in accordance with Section 710.*

FIRE-RETARDANT TREATED WOOD. [SFM] *See Section 2303.2.*

FOSTER CARE FACILITIES. ~~Facilities that provide care to more than five children, 2½ years of age or less.~~ *See Foster family home.*

FOSTER FAMILY HOME. *Foster family home means any residential facility providing 24-hour care for six or fewer foster children that is owned, leased, or rented and is the residence of the foster parent or parents, including their family, in whose care the foster children have been placed. The placement may be by a public or private child placement agency or by a court order, or by voluntary placement by a parent, parents, or guardian. It also means a foster family home described in Section 1505.2.*

FULL-TIME CARE. *Shall mean the establishment and routine care of persons on an hourly, daily, weekly, monthly, yearly or permanent basis, whether for 24-hours per day or less, and where sleeping accommodations are provided.*

GROUP HOME. ~~A facility for social rehabilitation, substance abuse or mental health problems that contains a group housing arrangement that provides custodial care but does not provide acute care.~~ *Group Home means a facility which provides 24-hour care and supervision to children, provides services specified in this chapter to a specific client group, and maintains a structured environment, with such services provided at least in part by staff employed by the licensee. The care and supervision provided by a group home shall be nonmedical except as permitted by Welfare and Institutions Code Section 17736(b). Since small family and foster family homes, by definition, care for six or fewer children only, any facility providing 24-hour care for seven or more children must be licensed as a group home.*

HAZARDOUS MATERIALS. Those chemicals or substances that are physical hazards or health hazards as classified in Section 307 and the ~~International~~*California* Fire Code, whether the materials are in usable or waste condition.

HAZARDOUS SUBSTANCE. [SFM] *Hazardous Substance is a substance which, by reason of being explosive, flammable, toxic, poisonous, corrosive, oxidizing, irritant or otherwise harmful, is likely to cause injury.*

HIGH-RISE BUILDING. ~~A building with an occupied floor located more than 75 feet (22 860 mm) above the lowest level of fire department vehicle access.~~*In other than Group I-2 occupancies "high-rise buildings" as used in this code:*

Existing high-rise structure. *A high-rise structure, the construction of which is commenced or completed prior to July 1, 1974.*

High-rise structure. *Every building of any type of construction or occupancy having floors used for human occupancy located more than 75 feet above the lowest floor level having building access (see Section 403~~.1.2~~), except buildings used as hospitals as defined in Health and Safety Code Section 1250.*

New High-rise Building. *A high-rise structure, the construction of which is commenced on or after July 1, 1974. For the purpose of this section, construction shall be deemed to have commenced when plans and specifications are more than 50 percent complete and have been presented to the local jurisdiction prior to July 1, 1974. Unless all provisions of this section have been met, the construction of such buildings shall commence on or before January 1, 1976.*

New high-rise structure. *A high-rise structure, the construction of which is commenced on or after July 1, 1974.*

HIGH-RISE BUILDING ACCESS. *An exterior door opening conforming to all of the following:*

1. Suitable and available for fire department use.
2. Located not more than 2 feet (610 mm) above the adjacent ground level.
3. Leading to a space, room or area having foot traffic communication capabilities with the remainder of the building.
4. Designed to permit penetration through the use of fire department forcible-entry tools and equipment unless other approved arrangements have been made with the fire authority having jurisdiction.

HOLDING FACILITY. *A detention or correctional facility or area where inmates, staff and public are not housed but are restrained.*

HOSPITALS AND PSYCHIATRIC HOSPITALS. Facilities that provide care or treatment for the medical, psychiatric, obstetrical, or surgical treatment of care recipients who are incapable of self-preservation *or classified as nonambulatory or bedridden.*

HOUSING UNIT. ~~A dormitory or a group of cells with a common dayroom in Group I-3.~~ *An area intended to lodge inmates on a 24-hour basis where accommodations are provided for sleeping.*

INFANT. *For the purpose of these regulations, shall mean any child who because of age only, is unable to walk and requires the aid of another person to evacuate the building. In no case shall the term "infant" mean a child 2 years of age or older.*

LABORATORY. [SFM] *A room, building or area where the use and storage of hazardous materials are utilized for testing, analysis, instruction, research or developmental activities.*

LABORATORY SUITE. [SFM] *A laboratory suite is a space within a building or structure, which may include multiple laboratories, offices, storage, equipment rooms or similar support functions, where the aggregate quantities of hazardous materials stored and used do not exceed the quantities set forth in Table ~~443.7.3.1~~453.7.3.1.*

LIQUID TIGHT FLOOR. [SFM] *A nonpermeable barrier capable of containing hazardous material liquids without degradation.*

LISTED. Equipment, materials, products or services included in a list published by an organization acceptable to the building official and concerned with evaluation of products or services that maintains periodic inspection of production of listed equipment or materials or periodic evaluation of services and whose listing states either that the equipment, material, product or service meets identified standards or has been tested and found suitable for a specified purpose.

For applications listed in Section 1.11 regulated by the Office of the State Fire Marshal, "listed" shall also mean equipment or materials accepted by the state fire marshal as conforming to the provisions of the State Fire Marshal's regulations and which are included in a list published by the State Fire Marshal.

LOBBY. [SFM] *An area not defined as a waiting room at the entrance of a building through which persons must pass.*

MOTION PICTURE AND TELEVISION PRODUCTION STUDIO SOUND STAGES, APPROVED PRODUCTION FACILITIES AND PRODUCTION LOCATIONS. *See Chapter 46, California Fire Code.*

NONAMBULATORY PERSONS. *Persons unable to leave a building unassisted under emergency conditions. It includes, but is not limited to, persons who depend on mechanical aids such as crutches, walkers and wheelchairs and any person who is unable to physically and mentally respond to a sensory signal approved by the state fire marshal or an oral instruction relating to fire danger.*

The determination of ambulatory or nonambulatory status of persons with developmental disabilities shall be made by the Director of Social Services or his or her designated representative, in consultation with the director of Developmental Services or his or her designated representative. The determination of ambulatory or nonambulatory status of all other disabled persons placed after January 1, 1984, who are not developmentally disabled shall be made by the Director of Social Services or his or her designated representative.

NONCOMBUSTIBLE. [SFM] *Noncombustible as applied to building construction material means a material which, in the form in which it is used, is either one of the following:*
1. Material of which no part will ignite and burn when subjected to fire. Any material passing ASTM E 136 shall be considered noncombustible.
2. Material having a structural base of noncombustible material as defined in Item 1 above, with a surfacing material not over 1/8 inch (3.2 mm) thick which has a flame-spread index of 50 or less.

"Noncombustible" does not apply to surface finish materials. Material required to be noncombustible for reduced clearances to flues, heating appliances or other sources of high temperature shall refer to material conforming to Item 1. No material shall be classed as noncombustible which is subject to increase in combustibility or flame-spread index, beyond the limits herein established, through the effects of age, moisture or other atmospheric condition.

NURSING HOMES. Facilities that provide care, including both intermediate care facilities and skilled nursing facilities where any of the persons are incapable of self-preservation *or classified as nonambulatory or bedridden.*

ORGANIZED CAMPS. *See Section ~~440~~450.*

PERMANENT PORTABLE BUILDING. [SFM] *A portable building that is used to serve or house students and is certified as a permanent building on a new public school campus by the public school administration shall comply with the requirements of new campus buildings.*

~~**PERSONAL CARE SERVICE.** The care of persons who do not require medical care. Personal care involves responsibility for the safety of the persons while inside the building.~~

PHYSIOLOGICAL WARNING THRESHOLD LEVEL. A concentration of air-borne contaminants, normally expressed in parts per million (ppm) or milligrams per cubic meter (mg/m3), that represents the concentration at which persons can sense the presence of the contaminant due to odor, irritation or other quick-acting physiological response. When used in conjunction with the permissible exposure limit (PEL) the physiological warning threshold levels are those consistent with the classification system used to establish the PEL. See the definition of "Permissible exposure limit (PEL)" in the ~~*International*~~*California Fire Code.*

PROTECTIVE SOCIAL CARE FACILITY. [SFM] *A facility housing persons, who are referred, placed or caused to be placed in the facility, by any governmental agency and for whom the services, or a portion thereof, are paid for by any governmental agency. These occupancies shall include, but are not limited to, those commonly referred to as "assisted living facilities," "social rehabilitation facilities," "certified family care homes," "out-of-home placement facilities," and "halfway houses."*

RELOCATABLE BUILDING (PUBLIC SCHOOL), *is any building with an integral floor structure which is capable of being readily moved. (See Education Code Section 17350.) Relocatable buildings that are to be placed on substandard foundations not complying with the requirements of Part 2, Title 24, C.C.R., require a statement from the school district stating that the durability requirements for those foundations may be waived and acknowledging the temporary nature of the foundations.*

RESIDENTIAL CARE FACILITY FOR THE CHRONICALLY ILL (RCF/CI). *As termed, means a housing arrangement with a maximum capacity of 25 residents that provides a range of services to residents who have chronic, life-threatening illnesses.*

RESIDENTIAL CARE FACILITY FOR THE ELDERLY (RCFE). *As defined in Health and Safety Code Section 1569.2, shall mean a facility with a housing arrangement chosen voluntarily by persons 60 years of age or over, or their authorized representative, where varying levels and intensities of care and supervision, protective supervision or personal care are provided, based on their varying needs, as determined in order to be admitted and to remain in the facility. Persons under 60 years of age with compatible needs, as determined by the Department of Social Services in regulations, may be allowed to be admitted or retained in a residential-care facility for the elderly.*

Pursuant to Health and Safety Code Section 13133, regulations of the state fire marshal pertaining to Group R, Division 2 Occupancies classified as residential facilities (RF) and residential- care facilities for the elderly (RCFE) shall apply uniformly throughout the state and no city, county, city and county, including a charter city or charter county, or fire protection district shall adopt or enforce any ordinance or local rule or regulation relating to fire and panic safety which is in consistent with these regulations. A city, county, city and county, including a charter city or charter county may pursuant to Health and Safety Code Section 13143.5, or a fire protection district may pursuant to Health and Safety Code Section 13869.7, adopt standards more stringent than those adopted by the state fire marshal that are reasonably necessary to accommodate local climate, geological, or topographical conditions relating to roof coverings for residential-care facilities for the elderly.

RESIDENTIAL FACILITY (RF). *As defined in Section 1502 of the Health and Safety Code, shall mean any family home, group care facility or similar facility determined by the director of Social Services, for 24-hour nonmedical care of persons in need of personal services, supervision, or assistance essential for sustaining the activities of daily living or for the protection of the individual. Such facilities include small family homes and social rehabilitation facilities.*

Pursuant to Health and Safety Code Section 13133, regulations of the state fire marshal pertaining to Group R Occupancies classified as residential facilities (RF) and residential-care facilities for the elderly (RCFE) shall apply uniformly throughout the state and no city, county, city and county, including a charter city or charter county, or fire protection district shall adopt or enforce any ordinance or local rule or regulation relating to fire and panic safety which is in consistent with these regulations. A city, county, city and county, including a charter city or charter county may pursuant to Health and Safety Code Section 13143.5, or a fire protection district may pursuant to Health and Safety Code Section 13869.7, adopt standards more stringent than those adopted by the state fire marshal that are reasonably necessary to accommodate local climate, geological, or topographical conditions relating to roof coverings for residential-care facilities for the elderly.

RESTRAINT. [SFM] *shall mean the physical retention of a person within a room, cell or cell block, holding cells, temporary holding cell, rooms or area, holding facility, secure interview rooms, courthouse holding facilities, courtroom docks, or similar buildings or portions thereof by any means, or within the exterior walls of a building by means of locked doors inoperable by the person restrained. Restraint shall also mean the physical binding, strapping or similar restriction of any person in a chair, walker, bed or other contrivance for the purpose of deliberately restricting the free movement of ambulatory persons.*

Restraint shall not be construed to include nonambulatory persons nor shall it include the use of bandage material, strip sheeting or other fabrics or materials (soft ties) used to restrain persons in hospital-type beds or wheelchairs to prevent injury, provided an approved method of quick release is maintained.

Facilities employing the use of soft ties, however, shall be classified as a building used to house nonambulatory persons. Restraint shall not be practiced in licensed facilities classified as Group R-2.1, R-3.1 and R-4 occupancies unless constructed as a Group I-3 occupancy. For Group I-3 Occupancies see Section 408.1.1.

SECURE INTERVIEW ROOMS: *A lockable room used to hold and interview detainees for further processing.*

SMALL MANAGEMENT YARD. *An exterior exercise yard within a Group I-3 prison used for inmate exercise for a maximum of 2 hours per day, constructed in accordance with Section 408.1.2.3.*

STATE-OWNED/LEASED BUILDING. [SFM] *State-Owned/Leased Building is a building or portion of a building that is owned, leased or rented by the state. State-leased buildings shall include all required exits to a public way serving such leased area or space. Portions of state- leased buildings that are not leased or rented by the state shall not be included within the scope of this section unless such portions present an exposure hazard to the state-leased area or space.*

TEMPORARY HOLDING CELL, ROOM or AREA. [CSA and SFM] *Temporary Holding cell, room or area shall mean a room for temporary holding of inmates, detainees, or in-custody individuals for less than 24 hours.*

TEMPORARY HOLDING FACILITY [SFM] *A building or portion of a building, operated by law enforcement personnel, with one or more temporary holding cells or rooms.*

TENABLE ENVIRONMENT [SFM] *Tenable environment shall mean an environment in which the products of combustion, toxic gases, smoke and heat are limited or otherwise restricted to maintain the impact on occupants to a level that is not life threatening.*

TERMINALLY ILL. *As termed for an individual, means the individual has a life expectancy of six months or less as stated in writing by his or her attending physician and surgeon.*

WAITING ROOM. [SFM] *Waiting room is a room or area normally provided with seating and used for persons waiting.*

WINERY CAVES. *See Section ~~436~~446.*

CHAPTER 3
USE AND OCCUPANCY CLASSIFICATIONS

302.1 General. Structures or portions of structures shall be classified with respect to occupancy in one or more of the groups listed in this section. A room or space that is intended to be occupied at different times for different purposes shall comply with all of the requirements that are applicable to each of the purposes for which the room or space will be occupied. Structures with multiple occupancies or uses shall comply with Section 508. Where a structure is proposed for a purpose that is not specifically provided for in this code, such structure shall be classified in the group that the occupancy most nearly resembles, according to the fire safety and relative hazard involved.

1. Assembly (see Section 303): Groups A-1, A-2, A-3, A-4 and A-5.
2. Business (see Section 304): Group B.
3. Educational (see Section 305): Group E.
4. Factory and Industrial (see Section 306): Groups F-1 and F-2.
5. High Hazard (see Section 307): Groups H-1, H-2, H-3, H-4 and H-5.
6. Institutional (see Section 308): Groups I-1, I-2, *I-2.1*, I-3 and I-4.
7. *Laboratory (see Section 202): Group B, unless classified as Group L (see Section ~~443~~453) or Group H (see Section 307).*
8. Mercantile (see Section 309): Group M.
9. *[SFM] Organized Camps (see Section ~~440~~450): Group C.*
10. *[SFM] Research Laboratories (see Section ~~443~~453): Group L.*
11. Residential (see Section 310): Groups R-1, R-2, *R-2.1*, R-3, *R-3.1* and R-4.
12. Storage (see Section 311): Groups S-1 and S-2.
13. Utility and Miscellaneous (see Section 312): Group U.

[SFM] Existing buildings housing existing protective social care homes or facilities established prior to 1972 (see ~~Section 3413~~California Fire Code Chapter 11 and California Existing Building Code).

303.1 Assembly Group A. Assembly Group A occupancy includes, among others, the use of a building or structure, or a portion thereof, for the gathering of persons for purposes such as civic, social or religious functions; recreation, food or drink consumption or awaiting transportation *or motion picture and television production studio sound stages, approved production facilities and production locations. Any building or structure or portion thereof used or intended*

to be used for the showing of motion pictures when an admission fee is charged and when such building or structure is open to the public and has a capacity of 10 or more persons.

303.2 Assembly Group A-1. Group A-1 occupancy includes assembly uses, usually with fixed seating, intended for the production and viewing of the performing arts or motion pictures including, but not limited to:

Motion picture and television production studio sound stages, approved production facilities and production locations. (with live audiences).
Motion picture theaters
Symphony and concert halls
Television and radio studios admitting an audience
Theaters

303.7 Fixed guideway transit systems. [SFM] *Fixed guideway transit system buildings shall conform to the requirements of this code for their occupancy classification in addition to the provisions set forth in Section ~~433~~443.*

303.8 Subterranean spaces for winery facilities in natural or manmade caves. [SFM] *For fire and life safety requirements, see Section ~~436~~446.*

305.1 Educational Group E. Educational Group E occupancy includes, among others, the use of a building or structure, or a portion thereof, by ~~six or~~ more *than six* persons at any one time for educational purposes through the 12th grade.

Exception: [SFM] *A residence used as a home school for the children who normally reside at the residence. Such residences shall remain classified as Group R-2, or Group R-3 occupancies.*

305.2 Group E, day care facilities. This group includes buildings and structures or portions thereof occupied by more than ~~five~~ *six* children ~~older than~~ 2~~½~~ years of age *and older* who receive educational, supervision or personal care services for fewer than 24 hours per day.

Exception: [SFM] *A Day-care facility not otherwise classified as an R-3 occupancy, where occupants are not capable of responding to an emergency situation without physical assistance from the staff shall be classified as Group I-4.*

~~**305.2.2 Five or fewer children.** A facility having five or fewer children receiving such day care shall be classified as part of the primary occupancy.~~

~~**305.2.3 Five or fewer children in a dwelling unit.** A facility such as the above within a dwelling unit and having five or fewer children receiving such day care shall be classified as a Group R-3 occupancy or shall comply with the *International Residential Code.*~~

306.2 Moderate-hazard factory industrial, Group F-1. Factory industrial uses that are not classified as Factory Industrial F-2 Low Hazard shall be classified as F-1 Moderate Hazard and shall include, but not be limited to, the following:

Aircraft (manufacturing, not to include repair)
Appliances
Athletic equipment
Automobiles and other motor vehicles
Bakeries
Beverages: over 16-percent alcohol content
Bicycles
Boats
Brooms or brushes
Business machines
Cameras and photo equipment
Canvas or similar fabric
Carpets and rugs (includes cleaning)
Clothing

Construction and agricultural machinery
Disinfectants
Dry cleaning and dyeing
Electric generation plants
Electronics
Engines (including rebuilding)
Food processing establishments and commercial kitchens not associated with restaurants, cafeterias and similar dining facilities more than 2,500 square feet (232 m2) in area.
Furniture
Hemp products
Jute products
Laundries
Leather products
Machinery
Metals
Millwork (sash and door)
[SFM] Motion picture and television production studio Sound Stages, Approved Production Facilities and production locations (without live audiences)
~~Motion pictures and television filming (without spectators)~~
Musical instruments
Optical goods
Paper mills or products
Photographic film
Plastic products
Printing or publishing
Recreational vehicles
Refuse incineration
Shoes
Soaps and detergents
Textiles
Tobacco
Trailers
Upholstering
Wood; distillation
Woodworking (cabinet)

[Editorial Note: 2013 CBC Section 307.1 was split into two Sections (307.1 and 307.1.1).]
307.1 High-hazard Group H. High-hazard Group H occupancy includes, among others, the use of a building or structure, or a portion thereof, that involves the manufacturing, processing, generation or storage of materials that constitute a physical or health hazard in quantities in excess of those allowed in control areas complying with Section 414, based on the maximum allowable quantity limits for control areas set forth in Tables 307.1(1) and 307.1(2). Hazardous occupancies are classified in Groups H-1, H-2, H-3, H-4 and H-5 and shall be in accordance with this section, the requirements of Section 415 and the ~~*International*~~*California Fire Code*. Hazardous materials stored, or used on top of roofs or canopies, shall be classified as outdoor storage or use and shall comply with the ~~*International*~~*California Fire Code*.

Table 307.1(2)
MAXIMUM ALLOWABLE QUANTITY PER CONTROL AREA OF HAZARDOUS MATERIAL POSING A HEALTH HAZARD
[Table not shown for clarity]
For SI: 1 cubic foot = 0.028 m3, 1 pound = 0.454 kg, 1 gallon = 3.785 L.
a. For use of control areas, see Section 414.2.
b. The aggregate quantity in use and storage shall not exceed the quantity listed for storage.
c. In retail and wholesale sales occupancies, the quantities of medicines, foodstuffs or consumer products, and cosmetics containing not more than 50 percent by volume of water-miscible liquids and with the remainder of the solutions not being flammable, shall not be limited, provided that such materials are packaged in individual containers not exceeding 1.3 gallons.

d. *[SFM] In other than Group L occupancies,* ~~M~~maximum allowable quantities shall be increased 100 percent in buildings equipped throughout with an approved automatic sprinkler system in accordance with Section 903.3.1.1. Where Note e also applies, the increase for both notes shall be applied accumulatively.
e. Maximum allowable quantities shall be increased 100 percent where stored in approved storage cabinets, gas cabinets or exhausted enclosures as specified in the ~~International~~*California Fire Code*. Where Note d also applies, the increase for both notes shall be applied accumulatively.
f. For storage and display quantities in Group M and storage quantities in Group S occupancies complying with Section 414.2.5, see Tables 414.2.5(1) and 414.2.5(2).
g. Allowed only where stored in approved exhausted gas cabinets or exhausted enclosures as specified in the ~~International~~California *Fire Code*.
h. Quantities in parenthesis indicate quantity units in parenthesis at the head of each column.
i. For gallons of liquids, divide the amount in pounds by 10 in accordance with Section 5003.1.2 of the ~~International~~*California Fire Code*.

307.1.1 Uses other than Group H. An occupancy that stores, uses or handles hazardous materials as described in one or more of the following items shall not be classified as Group H, but shall be classified as the occupancy that it most nearly resembles.

1. Buildings and structures occupied for the application of flammable finishes, provided that such buildings or areas conform to the requirements of Section 416 and the ~~*International*~~*California Fire Code*.
2. Wholesale and retail sales and storage of flammable and combustible liquids in mercantile occupancies conforming to the ~~*International*~~*California Fire Code*.
3. Closed piping system containing flammable or combustible liquids or gases utilized for the operation of machinery or equipment.
4. Cleaning establishments that utilize combustible liquid solvents having a flash point of 140°F (60°C) or higher in closed systems employing equipment listed by an approved testing agency, provided that this occupancy is separated from all other areas of the building by 1-hour fire barriers constructed in accordance with Section 707 or 1-hour horizontal assemblies constructed in accordance with Section 711, or both.
5. Cleaning establishments that utilize a liquid solvent having a flash point at or above 200°F (93°C).
6. Liquor stores and distributors without bulk storage.
7. Refrigeration systems.
8. The storage or utilization of materials for agricultural purposes on the premises.
9. Stationary batteries utilized for facility emergency power, uninterruptable power supply or telecommunication facilities, provided that the batteries are provided with safety venting caps and ventilation is provided in accordance with the ~~*International*~~*California Mechanical Code*.
10. Corrosive personal or household products in their original packaging used in retail display.
11. Commonly used corrosive building materials.
12. Buildings and structures occupied for aerosol storage shall be classified as Group S-1, provided that such buildings conform to the requirements of the ~~*International*~~*California Fire Code*.
13. Display and storage of nonflammable solid and nonflammable or noncombustible liquid hazardous materials in quantities not exceeding the maximum allowable quantity per *control area* in Group M or S occupancies complying with Section 414.2.5.
14. The storage of black powder, smokeless propellant and small arms primers in Groups M and R-3 and special industrial explosive devices in Groups B, F, M and S, provided such storage conforms to the quantity limits and requirements prescribed in the ~~*International*~~*California Fire Code*.
~~*14*~~*15. [SFM] Group L occupancies as defined in section* ~~*443.1*~~*453.1*.

~~**307.1.1**~~**307.1.2 Hazardous materials.** Hazardous materials in any quantity shall conform to the requirements of this code, including Section 414, and the ~~*International*~~*California Fire Code*.

308.1 Institutional Group I. Institutional Group I occupancy includes, among others, the use of a building or structure, or a portion thereof, in which care or supervision is provided to persons who are or are not capable of self-preservation without physical assistance or in which persons are detained for penal or correctional purposes or in which the liberty of the occupants is restricted. Institutional occupancies shall be classified as Group I-1, I-2, *I-2.1,* I -3 or I-4. *Restraint shall not be permitted in any building except in Group I-3 occupancies constructed for such use, see Section 408.1.2.*

Where occupancies house both ambulatory and nonambulatory persons, the more restrictive requirements shall apply.

308.3 Institutional Group I-1. *Not used. (See Group R-2.1 Section 310.1)*
~~Institutional Group I-1 occupancy shall include buildings, structures or portions thereof for more than 16 persons, excluding staff, who reside on a 24- hour basis in a supervised environment and receive custodial care. Buildings of Group I-1 shall be classified as one of the occupancy conditions specified in Section 308.3.1 or 308.3.2. This group shall include, but not be limited to, the following:~~
~~Alcohol and drug centers~~
~~Assisted living facilities~~
~~Congregate care facilities~~
~~Group homes~~
~~Halfway houses~~
~~Residential board and care facilities~~
~~Social rehabilitation facilities~~

~~**308.3.1 Condition 1.** This occupancy condition shall include buildings in which all persons receiving custodial care who, without any assistance, are capable of responding to an emergency situation to complete building evacuation.~~

~~**308.3.2 Condition 2.** This occupancy condition shall include buildings in which there are any persons receiving custodial care who require limited verbal or physical assistance while responding to an emergency situation to complete building evacuation.~~

~~**308.3.3 Six to 16 persons receiving custodial care.** A facility housing not fewer than six and not more than 16 persons receiving custodial care shall be classified as Group R-4.~~

~~**308.3.4 Five or fewer persons receiving custodial care.** A facility with five or fewer persons receiving custodial care shall be classified as Group R-3 or shall comply with the *International Residential Code* provided an *automatic sprinkler system* is installed in accordance with Section 903.3.1.3 or Section P2904 of the *International Residential Code.*~~

308.4 Institutional Group I-2. Institutional Group I-2 occupancy shall include buildings and structures used for medical care on a 24-hour basis for more than five persons who are incapable of self-preservation *or classified as nonambulatory or bedridden.* This group shall include, but not be limited to, the following:

Foster care facilities
Detoxification facilities
Hospitals
Nursing homes
Psychiatric hospitals

~~**308.4.2 Five or fewer persons receiving medical care.** A facility with five or fewer persons receiving medical care shall be classified as Group R-3 or shall comply with the International Residential Code provided an automatic sprinkler system is installed in accordance with Section 903.3.1.3 or Section P2904 of the International Residential Code.~~

308.4.2 Institutional Group I-2.1 Ambulatory health care facility. *A healthcare facility that receives persons for outpatient medical care that may render the patient incapable of unassisted self-preservation and where each tenant space accommodates more than five such patients.*

308.5 Institutional Group I-3. Institutional Group I-3 occupancy shall include buildings *or portions of buildings* and structures that are inhabited by *one or* more ~~than five~~ persons who are under restraint or security. A Group I-3 facility is occupied by persons who are generally incapable of self-preservation due to security measures not under the occupants' control *which includes persons restrained.* This group shall include, but not be limited to, the following:

Correctional Centers
Courthouse Holding Facility
Detention centers
Detention Treatment Room
Jails
Juvenile Halls

Prerelease Centers
Prisons
Reformatories
Secure Interview Rooms
Temporary Holding Facility

Buildings of Group I-3 shall be classified as one of the occupancy conditions specified in Sections 308.5.1 through ~~308.5.5~~ *308.5.8* (see Section 408.1).

308.5.6 Condition 6. *This occupancy condition shall include buildings containing only one temporary holding facility with five or less persons under restraint or security where the building is protected throughout with a monitored automatic sprinkler system installed in accordance with Section 903.3.1.1 and where the temporary holding facility is protected throughout with an automatic fire alarm system with notification appliances. A Condition 6 building shall be ~~is~~ permitted to be classified as a Group B occupancy.*

308.5.7 Condition 7. *This occupancy condition shall include buildings containing only one temporary holding facility with nine or less persons under restraint or security where limited to the first or second story, provided the building complies with Section 408.1.2.6. A Condition 7 building shall be permitted to be classified as a Group B occupancy.*

308.5.8 Condition 8. *This occupancy condition shall include buildings containing not more than four secure interview rooms located within the same fire area where not more than ~~6~~ six occupants under restraint are located in the same fire area. A Condition 8 building shall be ~~is~~ permitted to be classified as a Group B occupancy, provided the requirements in Section 408.1.2.7 are met.*

308.6 Institutional Group I-4, day care facilities. Institutional Group I-4 occupancy shall include buildings and structures occupied by more than ~~five~~*six* ~~persons~~*clients* of any age who receive custodial care for fewer than 24 hours per day by persons other than parents or guardians, relatives by blood, marriage or adoption, and in a place other than the home of the ~~person~~*clients* cared for. This group shall include, but not be limited to, the following:

Adult day care
Child day care

308.6.1 Classification as Group E. A child day care facility that provides care for more than ~~five~~*six* but not more than 100 children *under* 2½ years ~~or less~~ of age, where the rooms in which the children are cared for are located on a level of exit discharge serving such rooms and each of these child care rooms has an exit door directly to the exterior, shall be classified as Group E.

308.6.1.1 Special provisions. *See Section ~~442.1.4~~452.1.4 for daycares located above or below the first story.*

~~**308.6.2 Within a place of religious worship.** Rooms and spaces within places of religious worship providing such care during religious functions shall be classified as part of the primary occupancy.~~

~~**308.6.3 Five or fewer persons receiving care.** A facility having five or fewer persons receiving custodial care shall be classified as part of the primary occupancy.~~

~~**308.6.4 Five or fewer persons receiving care in a dwelling unit.** A facility such as the above within a dwelling unit and having five or fewer persons receiving custodial care shall be classified as a Group R-3 occupancy or shall comply with the International Residential Code.~~

310.1 Residential Group R. Residential Group R includes, among others, the use of a building or structure, or a portion thereof, for sleeping purposes when not classified as an Institutional Group I or when not regulated by the ~~*International*~~*California Residential Code.*

310.2 Definitions. The following terms are defined in Chapter 2:

AGED HOME OR INSTITUTION.
BEDRIDDEN PERSON.
BOARDING HOUSE.
CARE AND SUPERVISION.

CATASTROPHICALLY INJURED.
CHILD-CARE CENTER.
CHILD OR CHILDREN.
CHRONICALLY ILL.
~~CONGREGATE LIVING FACILITIES.~~
CONGREGATE LIVING HEALTH FACILITY (CLHF).
CONGREGATE RESIDENCE.
DAY CARE.
DAY-CARE HOME, FAMILY.
DAY-CARE HOME, LARGE FAMILY.
DAY-CARE HOME, SMALL FAMILY.
DORMITORY.
FULL-TIME CARE.
GROUP HOME.
GUEST ROOM.
INFANT.
LODGING HOUSE.
~~*MENTALLY RETARDED PERSONS, PROFOUNDLY OR SEVERELY.*~~
NONAMBULATORY PERSONS.
~~PERSONAL CARE SERVICE.~~
PERSONS WITH INTELLECTUAL DISABILITIES, PROFOUNDLY OR SEVERELY.
RESIDENTIAL CARE FACILITY FOR THE CHRONICALLY ILL (RCF/CI).
RESIDENTIAL CARE FACILITY FOR THE ELDERLY (RCFE).
RESIDENTIAL FACILITY (RF).
TERMINALLY ILL.
TRANSIENT.

310.3 Residential Group R-1. Residential Group R-1 occupancies containing sleeping units where the occupants are primarily transient in nature, including:

Boarding houses (transient) with more than 10 occupants
~~Congregate living facilities~~ *Congregate residences* (transient) with more than 10 occupants
Hotels (transient)
Motels (transient)

310.4 Residential Group R-2. Residential Group R-2 occupancies containing sleeping units or more than two dwelling units where the occupants are primarily permanent in nature, including:

Apartment houses
Boarding houses (nontransient) with more than 16 occupants
~~Congregate living facilities~~ *Congregate residences* (nontransient) with more than 16 occupants
Convents
Dormitories
Fraternities and sororities
Hotels (nontransient)
Live/work units
Monasteries
Motels (nontransient)
Vacation timeshare properties

310.4.1 Residential Group R-2.1 *Residential Group R-2.1 occupancies~~This occupancy~~ shall include buildings, structures or parts thereof housing clients, on a 24-hour basis, who because of age, mental disability or other reasons, live in a supervised residential environment that provides personal care services.*

This occupancy may contain more than six nonambulatory and/or bedridden clients. (See Section ~~425~~435 Special Provisions for Licensed 24-Hour Care Facilities in a Group R-2.1, R-3.1 or R-4 Occupancy). This group shall include, but not be limited to, the following:

Assisted living facilities such as:

Residential care facilities,
Residential care facilities for the elderly (RCFEs),
Adult residential facilities,
Congregate living health facilities,
Group homes,
Residential care facilities for the chronically ill,
Congregate living health facilities for the terminally ill.

Social rehabilitation facilities such as:
Halfway houses,
Community correctional centers,
Community correction reentry centers,
Community treatment programs,
Work furlough programs,
Alcoholism or drug abuse recovery or treatment facilities.

[Editorial Note: Order change to CA armaments.]
310.5 Residential Group R-3. Residential Group R-3 occupancies where the occupants are primarily permanent in nature and not classified as Group R-1, R-2, *R-2.1, R-3.1,* R-4 or I, including:

Buildings that do not contain more than two dwelling units.
Boarding houses (nontransient) with 16 or fewer occupants
Boarding houses (transient) with 10 or fewer occupants
~~Congregate living facilities~~*Congregate residences* (nontransient) with 16 or fewer occupants.
~~Congregate living facilities~~*Congregate residences* (transient) with 10 or fewer occupants.
Lodging houses with five or fewer guest rooms
~~Care facilities that provide accommodations for five or fewer persons receiving care~~
Adult care facilities that provide accommodations for six or fewer clients of any age for less than 24 hours. Licensing categories that may use this classification include~~, but are not limited to:~~ Adult Day Programs.

Alcoholism or drug abuse recovery homes (ambulatory only)

Child care facilities that provide accommodations for six or fewer clients of any age for less than 24 hours. Licensing categories that may use this classification include, but are not limited to:
Day-Care Center for Mildly Ill Children,
Infant Care Center,
School Age Child Day-Care Center.

Family Day-Care Homes that provide accommodations for 14 or fewer children, in the provider's own home for less than 24-hours.
Foster family homes (ambulatory only)

Adult care and child care facilities that are within a single-family home are permitted to comply with the California Residential Code.

~~**310.5.1 Care facilities within a dwelling.** Care facilities for five or fewer persons receiving care that are within a single-family dwelling are permitted to comply with the International Residential Code provided an automatic sprinkler system is installed in accordance with Section 903.3.1.3 or Section P2904 of the International Residential Code.~~

310.5.1 Residential Group R-3.1 *This occupancy group may include facilities licensed by a governmental agency for a residentially based 24-hour care facility providing accommodations for six or fewer clients of any age. Clients may be classified as ambulatory, nonambulatory or bedridden. A Group R-3.1 occupancy shall meet the requirements for construction as defined for Group R-3, except as otherwise provided for in Section ~~425~~435 Special Provisions For Licensed 24-Hour Care Facilities in a Group R-2.1, R-3.1 or R-4 Occupancy. This group may include:*

Adult residential facilities
Congregate living health facilities
Foster family homes
Group homes

Intermediate care facilities for the developmentally disabled habilitative
Intermediate care facilities for the developmentally disabled nursing
Nurseries for the full-time care of children under the age of six, but not including "infants" as defined in Section 310
Residential care facilities for the elderly
Small family homes and residential care facilities for the chronically ill

Exception: *Group Homes licensed by the Department of Social Services which provide nonmedical board, room and care for six or fewer ambulatory children or children two years of age or younger, and which do not have any nonambulatory clients shall not be subject to regulations found in Section ~~425~~435.*

Pursuant to Health and Safety Code Section 13143 with respect to these exempted facilities, no city, county or public district shall adopt or enforce any requirement for the prevention of fire or for the protection of life and property against fire and panic unless the requirement would be applicable to a structure regardless of the special occupancy. Nothing shall restrict the application of state or local housing standards to such facilities if the standards are applicable to residential occupancies and are not based on the use of the structure as a facility for ambulatory children. For the purpose of this exception, ambulatory children does not include relatives of the licensee or the licensee's spouse.

310.5.2 Lodging houses. Owner-occupied *lodging houses* with five or fewer *guest rooms* shall be permitted to be constructed in accordance with the ~~International~~*California Residential Code.*

310.6 Residential Group R-4. Residential Group R-4 occupancy shall include buildings, structures or portions thereof for more than ~~five~~*six ambulatory clients*, but not more than 16 persons, excluding staff, who reside on a 24-hour basis in a supervised residential environment and receive custodial care. Buildings of Group R-4 shall be classified as one of the occupancy conditions specified in Section 310.6.1 or 310.6.2. The persons receiving care are capable of self-preservation. This group shall include, but not be limited to, the following:

~~Alcohol and drug centers~~
~~Assisted living facilities~~
~~Congregate care facilities~~
~~Group homes~~
~~Halfway houses~~
~~Residential board and care facilities~~
~~Social rehabilitation facilities~~

This occupancy classification may include a maximum six nonambulatory or bedridden clients (see Section ~~425~~435 Special Provisions for Licensed 24-Hour Care Facilities in a Group R-2.1, R-3.1 or R-4 Occupancy). Group R-4 occupancies shall include the following:

Assisted living facilities such as:
Residential care facilities,
Residential care facilities for the elderly (RCFE~~s~~),
Adult residential facilities,
Congregate living health facilities,
Group homes.

Social rehabilitation facilities such as:
Halfway houses,
Community correctional centers,
Community correction reentry centers,
Community treatment programs,
Work furlough programs,
Alcoholism or drug abuse recovery or treatment facilities.

Group R-4 occupancies shall meet the requirements for construction as defined for Group R-3, except as otherwise provided for in this code.

310.7 Large Family Day-Care Homes. *See Section ~~445~~455.*

SECTION 313
LABORATORIES GROUP L [SFM]

313.1 Laboratories Group L. [SFM] *Group L occupancy includes the use of a building or structure, or a portion thereof, containing one or more laboratory suites as defined in Section ~~443~~453.*

SECTION 314
ORGANIZED CAMPS GROUP C [SFM]

314.1 Organized Camps Group C. [SFM] *An organized camp is a site with programs and facilities established for the primary purpose of providing an outdoor group living experience with social, spiritual, educational or recreational objectives, for five days or more during one or more seasons of the year.*

CHAPTER 4
SPECIAL DETAILED REQUIREMENTS BASED ON USE AND OCCUPANCY

SECTION 403
HIGH-RISE BUILDINGS *AND GROUP I-2 OCCUPANCIES HAVING OCCUPIED FLOORS LOCATED MORE THAN 75 FEET ABOVE THE LOWEST LEVEL OF FIRE DEPARTMENT VEHICLE ACCESS*

403.1 Applicability. *New* ~~H~~high-rise buildings *and new Group I-2 occupancies having occupied floors located more than 75 feet above the lowest level of fire department vehicle access* shall comply with Sections 403.2 through ~~403.6~~ *403.7*.

Exception: The provisions of Sections 403.2 through ~~403.6~~403.7 shall not apply to the following buildings and structures:
1. Airport traffic control towers in accordance with Section 412.3.
2. Open parking garages in accordance with Section 406.3.
3. The portion of a building containing a Group A-5 occupancy in accordance with Section 303.6.
4. Special industrial occupancies in accordance with Section 503.1.1.
~~5. Buildings with:~~
~~5.1. A Group H-1 occupancy;~~
~~5.2. A Group H-2 occupancy in accordance with Section 415.8, 415.9.2, 415.9.3 or 426.1; or,~~
~~5.3. A Group H-3 occupancy in accordance with Section 415.8.~~
5. *Buildings such as power plants, lookout towers, steeples, grain houses and similar structures with noncontinuous human occupancy, when so determined by the enforcing agency.*

For existing high-rise buildings~~, see Section 3414~~ and for existing Group R occupancies, see ~~Section 3413.13~~California Fire Code Chapter 11 and California Existing Building Code.

For the purpose of this section, in determining the level from which the highest occupied floor is to be measured, the enforcing agency should exercise reasonable judgment, including consideration of overall accessibility to the building by fire department personnel and vehicular equipment. When a building is located on sloping terrain and there is building access on more than one level, the enforcing agency may select the level that provides the most logical and adequate fire department access.

403.1.1 Definitions. *The following terms are defined in Chapter 2.*

HIGH-RISE BUILDING.
HIGH-RISE BUILDING ACCESS.
NEW HIGH-RISE BUILDING.

403.2.1 Reduction in fire-resistance rating. The fire-resistance-rating reductions listed in Sections 403.2.1.1 and 403.2.1.2 shall be allowed in buildings that have sprinkler control valves equipped with supervisory initiating devices and water-flow initiating devices for each floor.

Exception: *Buildings, or portions of buildings, classified as a Group H-1, H-2 or H-3 occupancy.*

403.2.1.1 Type of construction. The following reductions in the minimum fire-resistance rating of the building elements in Table 601 shall be permitted as follows:

1. For buildings not greater than 420 feet (128 000 mm) in building height, the fire-resistance rating of the building elements in Type IA construction shall be permitted to be reduced to the minimum fire-resistance ratings for the building elements in Type IB.

Exception: The required fire-resistance rating of ~~columns supporting floors~~ *the Structural Frame* shall not be reduced.

2. In other than Group F-1, M and S-1 occupancies, the fire-resistance rating of the building elements in Type IB construction shall be permitted to be reduced to the fire-resistance ratings in Type IIA.

Exception: *The required fire-resistance rating of the structural frame shall not be permitted to be reduced.*

3. The building height and building area limitations of a building containing building elements with reduced fire-resistance ratings shall be permitted to be the same as the building without such reductions.

403.3 Automatic sprinkler system. Buildings and structures shall be equipped throughout with an automatic sprinkler system in accordance with Section 903.3.1.1 and a secondary water supply where required by Section 403.3.3. *A sprinkler water-flow alarm-initiating device and a control valve with a supervisory signal-initiating device shall be provided at the lateral connection to the riser for each floor.*

Exception: An automatic sprinkler system shall not be required in ~~spaces or areas of:~~
~~1.~~ Open parking garages in accordance with Section 406.5.
~~2. Telecommunications equipment buildings used exclusively for telecommunications equipment, associated electrical power distribution equipment, batteries and standby engines, provided that those spaces or areas are equipped throughout with an automatic fire detection system in accordance with Section 907.2 and are separated from the remainder of the building by not less than 1-hour fire barriers constructed in accordance with Section 707 or not less than 2-hour horizontal assemblies constructed in accordance with Section 711, or both.~~

403.3.1 Number of sprinkler *system* risers and system design. Each sprinkler system ~~zone~~ *serving a floor* in buildings that are more than 420 feet (128 000 mm) in building height shall be ~~supplied by no fewer than~~ *connected to a minimum of* two *sprinkler* risers *or combination standpipe system risers located in separate shafts. Each sprinkler system shall be hydraulically designed so that when one connection is shut-down, the other connection shall be capable of supplying the sprinkler system design demand.* ~~Each riser shall supply sprinklers on alternate floors. If more than two risers are provided for a zone, sprinklers on adjacent floors shall not be supplied from the same riser.~~

403.3.2 Water supply to required fire pumps. In buildings *having an occupied floor* that are more than ~~420~~*120* feet (~~128 000 mm~~*36 576 mm*) *above the lowest level of fire department vehicle access* ~~in building height~~, required fire pumps shall be supplied by connections to no fewer than two water mains located in different streets. Separate supply piping shall be provided between each connection to the water main and the pumps. Each connection and the supply piping between the connection and the pumps shall be sized to supply the flow and pressure required for the pumps to operate.

Exceptions*:*
~~*1:*~~ Two connections to the same main shall be permitted provided the main is valved such that an interruption can be isolated so that the water supply will continue without interruption through no fewer than one of the connections.
~~*2: High-rise buildings not having an occupied floor more than 120 feet above the lowest level of fire department vehicle access where a secondary water supply is provided in accordance with Section 903.3.5.2403.3.3.*~~

403.3.2.1 Fire Pumps: *Redundant fire pump systems shall be required for high-rise buildings having an occupied floor more than 200 feet above the lowest level of fire department vehicle access. Each fire pump system shall be capable of automatically supplying the required demand for the automatic sprinkler and standpipe systems.*

403.3.3 Secondary water supply. An automatic secondary on-site water supply having a *usable* capacity *of* not less than the hydraulically calculated sprinkler demand, including the hose stream requirement, shall be provided for high-rise buildings *and Group I-2 occupancies having occupied floors located more than 75 ft above the lowest level of fire department vehicle access* assigned to Seismic Design Category C, D, E or F as determined by Section 1613. An

additional fire pump shall not be required for the secondary water supply unless needed to provide the minimum design intake pressure at the suction side of the fire pump supplying the automatic sprinkler system. The secondary water supply shall have a *useable capacity of not less than the hydraulically calculated sprinkler demand plus 100 GPM for the inside hose stream, allowance, for a* duration of not less than 30 minutes or as determined by the occupancy hazard classification in accordance with NFPA 13, *whichever is greater. The Class I standpipe system demand shall not be required to be included in the secondary on-site water supply calculations. In no case shall the secondary on-site water supply be less than 15,000 gallons.*

~~*403.3.4*~~*403.3.5* ***Fire pumps.*** *See Section 913.6.*

403.4.5 Emergency responder radio coverage. Emergency responder radio coverage shall be provided in accordance with Section 510 of the ~~*International*~~*California Fire Code.*

~~**403.4.7 Smoke removal.** To facilitate smoke removal in post fire salvage and overhaul operations, buildings and structures shall be equipped with natural or mechanical ventilation for removal of products of combustion in accordance with one of the following:~~

~~1. Easily identifiable, manually operable windows or panels shall be distributed around the perimeter of each floor at not more than 50 foot (15 240 mm) intervals. The area of operable windows or panels shall be not less than 40 square feet (3.7 m2) per 50 linear feet (15 240 mm) of perimeter.~~
~~**Exceptions:**~~
~~1. In Group R-1 occupancies, each sleeping unit or suite having an exterior wall shall be permitted to be provided with 2 square feet (0.19 m2) of venting area in lieu of the area specified in Item 1.~~
~~2. Windows shall be permitted to be fixed provided that glazing can be cleared by fire fighters.~~

~~2. Mechanical air-handling equipment providing one exhaust air change every 15 minutes for the area involved. Return and exhaust air shall be moved directly to the outside without recirculation to other portions of the building.~~
~~3. Any other approved design that will produce equivalent results.~~

403.4.7 Smoke control.

403.4.7.1 Smoke control system. *All portions of high-rise buildings shall be provided with a smoke control system or in accordance with Section 909.*

403.5.3 Stairway door operation. Stairway doors other than the *exit discharge* doors shall be permitted to be locked from the stairway side. Stairway doors that are locked from the stairway side shall be capable of being unlocked simultaneously without unlatching upon a signal from the fire command center. *Upon failure of electrical power to the locking mechanism the door shall unlock.*

403.5.4 Smokeproof enclosures. *Every exit enclosure in high-rise buildings shall comply with Sections 909.20 and* ~~1023.10~~1023.11. Every required interior exit stairway *in Group I-2 occupancies* serving floors more than 75 feet (22 860 mm) above the lowest level of fire department vehicle access shall be a smokeproof enclosure in accordance with Sections 909.20 and ~~1023.10~~1023.11.

Exception: *In high-rise buildings, exit enclosures serving three or less adjacent floors where one of the adjacent floors is the level of exit discharge.*

403.6 Elevators. Elevator installation and operation in high-rise buildings shall comply with Chapter 30 and Sections 403.6.1 and 403.6.2.

Enclosed elevator lobbies shall be provided in accordance with Section ~~713.14.1~~3006. Exceptions ~~3, 5, 6 and 8~~2, 3, 4, and 5 of 3006.3 shall only be permitted where approved by the Fire Chief in accordance with Section 1.11.2.1.1 or in accordance with Section 1.11.2.1.2 for all state-owned buildings, state-occupied buildings, and state institutions throughout the state.

403.7 Existing high-rise buildings. *For existing high-rise buildings, see ~~Section 3414~~ California Fire Code Chapter 11 and California Existing Building Code.*

404.2 Use. The floor of the atrium shall not be used for other than low fire hazard uses and only approved materials and decorations in accordance with the ~~*International*~~*California Fire Code* shall be used in the atrium space.

Exception: The atrium floor area is permitted to be used for any approved use where the individual space is provided with an automatic sprinkler system in accordance with Section 903.3.1.1.

404.6 Enclosure of atriums. Atrium spaces shall be separated from adjacent spaces by a 1-hour fire barrier constructed in accordance with Section 707 or a horizontal assembly constructed in accordance with Section 711, or both.

Exceptions:
1. A fire barrier is not required where a glass wall forming a smoke partition is provided. The glass wall shall comply with all of the following:
1.1. Automatic sprinklers are provided along both sides of the separation wall and doors, or on the room side only if there is not a walkway on the atrium side. The sprinklers shall be located between 4 inches and 12 inches (102 mm and 305 mm) away from the glass and at intervals along the glass not greater than 6 feet (1829 mm). The sprinkler system shall be designed so that the entire surface of the glass is wet upon activation of the sprinkler system without obstruction;
1.2. The glass wall shall be installed in a gasketed frame in a manner that the framing system deflects without breaking (loading) the glass before the sprinkler system operates; and
1.3. Where glass doors are provided in the glass wall, they shall be either self-closing or automatic- closing.
2. A fire barrier is not required where a glass-block wall assembly complying with Section 2110 and having a 3/4-hour fire protection rating is provided.
3. *In other than Group I and R-2.1 occupancies,* ~~A~~a fire barrier is not required between the atrium and the adjoining spaces of any three floors of the atrium provided such spaces are accounted for in the design of the smoke control system.

~~***404.10***~~***404.11*** ***Group I and R-2.1 occupancy means of egress.*** *Required means of egress from sleeping rooms in Group I and R-2.1 occupancies shall not pass through the atrium.*

406.7 Motor fuel-dispensing facilities. Motor fuel-dispensing facilities shall comply with the ~~International~~*California* Fire Code and Sections 406.7.1 and 406.7.2.

406.8 Repair garages. Repair garages shall be constructed in accordance with the ~~International~~*California* Fire Code and Sections 406.8.1 through 406.8.6. This occupancy shall not include motor fuel-dispensing facilities, as regulated in Section 406.7.

406.8.2 Ventilation. Repair garages shall be mechanically ventilated in accordance with the ~~International~~*California* Mechanical Code. The ventilation system shall be controlled at the entrance to the garage.

406.8.4 Heating equipment. Heating equipment shall be installed in accordance with the ~~International~~*California* Mechanical Code.

406.9 Electric Vehicle. [SFM]

[Editorial Note: Electric Vehicle definition relocated to Chapter 2]
~~***406.9.1 Electric Vehicle.*** *An automotive-type vehicle for highway use, such as passenger automobiles, buses, trucks, vans and the like, primarily powered by an electric motor that draws current from a rechargeable storage battery, fuel cell, photovoltaic array or other source of electric current. For the purpose of this chapter, electric motorcycles and similar type vehicles and off-road self-propelled electric vehicles such as industrial trucks, hoists, lifts, transports, golf carts, airline ground support equipment, tractors, boats and the like, are not included.*~~

~~***406.9.2***~~***406.9.1*** ***Charging.*** *In any building or interior area used for charging electric vehicles, electrical equipment shall be installed in accordance with the California Electrical Code.*

~~***406.9.3***~~***406.9.2*** ***Ventilation.*** *Mechanical exhaust ventilation, when required by the California Electrical Code shall be provided at a rate as required by Article 625 or as required by Section 1203 of the California Building Code whichever is greater. The ventilation system shall include both the supply and exhaust equipment and shall be permanently*

installed and located to intake supply air from the outdoors, and vent the exhaust directly to, the outdoors without conducting the exhaust air through other spaces within the building.

Exception: *Positive pressure ventilation systems shall only be allowed in buildings or areas that have been designed and approved for that application.*

~~*406.9.4*~~*406.9.3* ***Electrical Interface.*** *The electrical supply circuit to electrically powered mechanical ventilation equipment shall be interlocked with the recharging equipment used to supply the vehicle(s) being charged, and shall remain energized during the entire charging cycle. Electric vehicle recharging equipment shall be marked or labeled in accordance with the California Electrical Code.*

Exceptions:
1. Exhaust ventilation shall not be required in areas with an approved engineered ventilation system, which maintains a hydrogen gas concentration at less than 25 percent of the lower flammability limit.
2. Mechanical exhaust ventilation for hydrogen shall not be required where the charging equipment utilized is installed and listed for indoor charging of electric vehicles without ventilation.

407.1 General. Occupancies in Group I-2 *and I-2.1* shall comply with the provisions of Sections 407.1 through 407.10 and other applicable provisions of this code.

407.2 Corridors continuity and separation. Corridors in occupancies in Group I-2 *and I-2.1* shall be continuous to the exits and shall be separated from other areas in accordance with Section 407.3 except spaces conforming to Sections 407.2.1 through 407.2.4.

407.2.2 ~~**Care providers'**~~ ***Nurses' stations.*** Spaces for care providers', supervisory staff, doctors' and nurses' charting, communications and related clerical areas shall be permitted to be open to, *or located within* the corridor *provided the required construction along the perimeter of the corridor is maintained* ~~when such spaces are constructed as required for corridors~~. *Construction of nurses' stations or portions of nurses' stations, within the envelope of the corridor is not required to be fire-resistive rated. Nurses' stations in new and existing facilities see the California Code of Regulations, Title 19, Division 1, Chapter 1, Subchapter 1, Article 3, Section 3.11(d) for storage and equipment requirements.*

In detention or secure mental health facilities, the provisions above applies to enclosed nurses' stations within the corridor.

407.3 Corridor wall construction. Corridor walls shall be constructed as ~~smoke~~*fire* partitions in accordance with Section ~~710~~*708*.

407.4 Means of egress. Group I-2 *and I-2.1* occupancies shall be provided with means of egress complying with Chapter 10 and Sections 407.4.1 through 407.4.4. The fire safety and evacuation plans provided in accordance with Section 1001.4 shall identify the building components necessary to support a defend-in-place emergency response in accordance with Sections 404 and 408 of the ~~International~~*California* Fire Code.

407.4.1.2 Basement exits. *All rooms below grade shall have not less than one exit access that leads directly to an exterior exit door opening directly to an exit discharge at grade plane or the public way.*

407.4.2 Distance of travel. The distance of travel between any point in a Group I-2 *or I-2.1* occupancy sleeping room, not located in a care suite, and an exit access door in that room shall be not greater than 50 feet (15 240 mm).

407.4.4 Group I-2 care suites. Care suites in Group I-2 *or I-2.1* shall comply with Sections 407.4.4.1 through 407.4.4.4 and either Section 407.4.4.5 or 407.4.4.6.

407.4.4.2 Separation. Care suites shall be separated from other portions of the building, including other care suites, by ~~a smoke partition~~*not less than a one-hour fire barrier* complying with Section ~~710~~*707 Each suite of rooms shall be separated from the remainder of the building by not less than a one-hour fire barrier.*

407.5.2 Independent egress. *At least two* means of egress shall be provided from each smoke compartment created by smoke barriers. ~~without having to~~ *Means of egress may pass through adjacent compartments provided it does* not return through the smoke compartment from which *means of egress* originated.

407.6 Automatic sprinkler system. ~~Smoke compartments containing sleeping rooms shall be equipped throughout with an automatic sprinkler system in accordance with Sections 903.3.1.1 and 903.3.2.~~ *Every facility as specified herein wherein more than six clients or patients are housed or cared for on the premises on a 24-hour per-day-basis shall have installed and maintained in an operable condition in every building or portion thereof where clients or patients are housed, an automatic sprinkler system of a type approved by the state fire marshal. The provisions of this subsection shall apply to every person, firm or corporation establishing, maintaining or operating a hospital, children's home, children's nursery or institution, or a home or institution for the care of aged or persons with dementia or other cognitive impairments, or any institution for persons with mental illness or persons with developmental disabilities and any nursing or convalescent home, and to any state-owned or state-occupied building used for any of the types of facilities specified herein.*

Exceptions:
1. This section shall not apply to homes or institutions for the 24-hour-per-day care of ambulatory children if all of the following conditions are satisfied:
1.1. The buildings or portions thereof in which children are housed are not more than two stories in height and are constructed and maintained in accordance with regulations adopted by the state fire marshal.
1.2. The buildings or portions thereof housing more than six such children shall have installed and maintained in an operable condition therein, a fire alarm system of a type approved by the state fire marshal. Such system shall be activated by detectors responding to invisible particles of combustion other than heat, except that detectors used in closets, usable under-floor areas, storage rooms, bathrooms, attached garages, attics, plenums, laundry rooms and rooms of similar use, may be heat-responsive devices.
1.3. The building or portions thereof do not house persons with mental illness or children with developmental disabilities.

2. This section shall not apply to any one-story building or structure of an institution or home for the care of the aged providing 24-hour-per-day care if such building or structure is used or intended to be used for the housing of no more than six ambulatory aged persons. Such buildings or institutions shall have installed and maintained in an operable condition herein a fire alarm system of a type approved by the state fire marshal. Such system shall be activated by detectors responding to either visible or invisible particles of combustion other than heat, except that detectors used in closets, usable under-floor areas, storage rooms, bathrooms, attached garages, attics, plenums, laundry rooms and rooms of similar use, may be heat-responsive devices.
3. This section shall not apply to occupancies or any alterations thereto conforming to the construction provisions of this exception which were under construction or in existence on March 4, 1972. "Under construction" as used in this exception shall mean that actual work had been performed on the construction site and shall not be construed to mean that the hospital, home, nursery, institution, sanitarium or any portion thereof, was or is in the planning stage. The provisions of this exception shall apply to those buildings or structures having bearing walls and structural flame protected in accordance with the provisions of Column Type 1A of Table 601.
4. In detention facilities where inmates are not restrained.

The provisions of this section shall not apply to any facility used to house six or less persons on the premises.

407.6.1 *When a new addition is to be made to an unsprinklered building or structure as permitted by this subsection, such new addition shall be sprinklered as required by this section and shall be separated from the existing building or structures by not less than a two-hour fire-resistive fire barrier.*

When a sprinkler system is added to an existing unsprinklered building or structure, the sprinklered area(s) shall be separated from the remainder of the building by not less than a one-hour fire-resistive fire barrier. The provisions of this section do not apply to any facility used to house six or less persons on the premises.

407.8 Automatic fire detection. ~~Corridors in Group I-2, Condition 1, occupancies, long-term care facilities, detoxification facilities and spaces permitted to be open to the corridors by Section 407.2 shall be equipped with an automatic fire detection system. Group I-2, Condition 2, occupancies shall be equipped with smoke detection as required in Section 407.2.~~
~~**Exceptions:**~~
~~1. Corridor smoke detection is not required where sleeping rooms are provided with smoke detectors that comply with UL 268. Such detectors shall provide a visual display on the corridor side of each sleeping room and an audible and visual alarm at the care provider's station attending each unit.~~

~~2. Corridor smoke detection is not required where sleeping room doors are equipped with automatic door closing devices with integral smoke detectors on the unit sides installed in accordance with their listing, provided that the integral detectors perform the required alerting function.~~ *See Section 907.2.6.2.*

407.9 Secured yards. Grounds are permitted to be fenced and gates therein are permitted to be equipped with locks, provided that safe dispersal areas having 30 net square feet (2.8 m2) for bed and stretcher care recipients and 6 net square feet (0.56 m2) for ambulatory care recipients and other occupants are located between the building and the fence. Such provided safe dispersal areas shall be located not less than 50 feet (15 240 mm) from the building they serve. *Each safe dispersal area shall have a minimum of two exits. The aggregate clear width of exits from a safe dispersal area shall be determined on the basis of not less than one exit unit of 22 inches (559 mm) for each 500 persons to be accommodated, and no exit shall be less than 44 inches (1118 mm) in width. Gates shall not be installed across corridors or passageways leading to such dispersal areas unless they comply with egress requirements. Keys to gate locks shall be provided in accordance with the California Fire Code.*

407.11 Special Hazards.

407.11.1 *Storage and handling of flammable, combustible liquids and hazardous materials shall be in accordance with the California Fire Code.*

407.11.2 *All exterior openings in a boiler room or room containing central heating equipment, if located below openings in another story, or if less than 10 feet (3048 mm) from other doors or windows of the same building, shall be protected by a fire assembly having a three-fourths-hour fire protection rating.*

407.11.3 Safety padding. *See Sections 308.1 and 408.14.*

407.11.4 Floor Surfaces. *Rooms occupied by patients whose personal liberties are restrained shall have noncombustible floor surfaces see Sections 308.1 and ~~804.4.2~~804.4.3.*

408.1.1 Definitions. The following terms are defined in Chapter 2:
CELL.
CELL COMPLEX.
CELL TIERS.
CENTRAL CONTROL BUILDING.
COURTROOM DOCK.
COURTHOUSE HOLDING FACILITY.
DAY ROOM.
DETENTION ELEVATOR.
DETENTION TREATMENT ROOM.
DORMITORY.
HOLDING FACILITY.
HOUSING UNIT.
RESTRAINT.
SALLYPORT.
SMALL MANAGEMENT YARD.
SECURE INTERVIEW ROOMS.
TEMPORARY HOLDING CELL, ROOM OR AREA.
TEMPORARY HOLDING FACILITY.

408.1.2 Construction. *Group I-3 Occupancies shall be housed in buildings of Type IA or Type IB.*

Exception: *Such occupancies may be housed in one-story buildings of Type IIA, Type IIIA or Type VA construction provided the floor area does not exceed 5,200 square feet (483m2) between fire walls of two-hour fire-resistive construction with openings protected by fire assemblies having 1- and 11/2-hour fire-protection rating.*

408.1.2.1 Nonbearing walls and partitions interior. *Nonbearing cell or dormitory walls within cell complexes shall be of noncombustible construction.*

408.1.2.2 Intervening spaces. *Common rooms and spaces within Group I-3 occupancies can be considered an intervening space in accordance with Section 1014.2, and not considered a corridor, when they meet any of the following:*

1. The inmate and/or staff movement within cell complexes, medical housing wings, and mental health housing wings of Type I construction.
2. Areas within any temporary holding area of non-combustible construction.
3. Areas within secure mental health treatment facilities of non-combustible construction.

408.1.2.3 Courthouse Holding Facilities. *Group I-3 courthouse holding facilities shall be considered a separate and distinct building from the remaining courthouse building for the purpose of determining the type of construction where all of the following conditions are met:*

1. 2-hour fire barriers in accordance with Section 707 and 2-hour horizontal assemblies in accordance with Section 711 are provided to separate the courthouse holding facility from all other portions of the courthouse building.
2. Any of the structure used to support courthouse holding facilities meets the requirements for the Group I-3 portion of the building
3. Each courthouse holding facility located above the first story is less than 1,000 square feet in area, and is designed to hold 10 or less in-custody defendants
4. Courthouse holding facilities located above the first story containing an internal stairway discharging to the main courthouse holding facility at the first story or basement
5. Additional exits from the courthouse holding facility located above the first story shall be permitted to exit through the courtrooms
6. The main courthouse holding facility located on the first story or basement has at least one exit directly to the exterior and additional means of egress shall be permitted to pass through a 1-hour corridor or lobby in the courthouse building

408.1.2.4 Horizontal building separation for combined Group I-3/Group B occupancy.
A Group B Administration building one story in height shall be permitted to located above a Group I-3 (or Group I-3/I-2) housing/treatment building which is one story above grade and shall be classified as a separate and distinct building for the purpose of determining the type of construction, and shall be considered a separate fire area, where all of the following conditions are met:

1. A 3-hour floor-ceiling assembly below the administration building is constructed as a horizontal assembly in accordance with Section 711.
2. Interior shafts for stairs, elevators, and mechanical systems complete the 3-hour separation between the Group B and Group I-3 (or Group I-3/I-2)
3. The Group I-3 occupancy (or Group I-3/I-2occupancies, correctional medical and mental health uses) below is minimum Type I-B construction with 2-hour fire resistive rated exterior walls
4. No unprotected openings are allowed in lower roofs within 10 feet of unprotected windows in the upper floor
5. The Group B building above is of non-combustible construction and equipped throughout with an approved automatic sprinkler system in accordance with Section 903.3.1.1
6. The Group B occupancy building above has all required means of egress capable of discharging directly to the exterior to a safe dispersal area

408.1.2.5 Temporary Holding Area. *In buildings protected with automatic sprinklers, corridor serving temporary holding rooms shall be one hour fire resistance rated when the temporary holding occupant load is greater than 20.*

408.1.2.6 Temporary Holding Facilities. *Temporary holding facilities with nine or fewer persons under restraint may be classified as Group B when located in a buildings complying withal of the following conditions:*

1. The building shall be protected throughout with a monitored automatic sprinkler system installed in accordance with Section 903.3.1.1
2. The building shall protected with a automatic fire alarm system with notification appliances throughout the holding facility in accordance with Section 907.2
3. The building shall be constructed of Type I, IIA, IIIA or VA construction.

408.1.2.7 Secure Interview Rooms. *Secure Interview Rooms used for law enforcement shall be permitted to locked, and shall not be classified as Group I-3 occupancies where all of the following conditions are met:*

1. A monitored automatic sprinkler system shall be provided throughout buildings and portions thereof including Secure Interview Rooms. The automatic sprinkler system shall comply with Section 903.1.1.
2. Secure Interview Rooms shall be located in non-combustible construction.
3. Secure Interview Rooms have glazed or barred openings with direct, continuous observation from law enforcement personnel who have a means to open the secure interview room.
4. Not more than 6 occupants in Secure Interview Rooms shall be located in the same fire area.
5. An automatic smoke detection system shall be installed within Secure Interview Rooms and mechanical and electrical rooms.

408.2 Other occupancies. Buildings or portions of buildings in Group I-3 occupancies where security operations necessitate the locking of required means of egress shall be permitted to be classified as a different occupancy. Occupancies classified as other than Group I-3 shall meet the applicable requirements of this code for that occupancy where provisions are made for the release of occupants at all times.

Means of egress from detention and correctional occupancies that traverse other use areas shall, as a minimum, conform to requirements for detention and correctional occupancies.

Exceptions:
1. It is permissible to exit through a horizontal exit into other contiguous occupancies that do not conform to detention and correctional occupancy egress provisions but that do comply with requirements set forth in the appropriate occupancy, as long as the occupancy is not a Group H use.
2. Regardless of the provisions of Section 508, laundry areas and kitchens including associated dining areas, where commercial/institutional equipment is used shall be separated from the remainder of the building by construction capable of resisting the passage of smoke.
3. For the purpose of occupancy separation only courtroom docks that are directly accessory to courtrooms need not be separated from a courtroom.

408.2.1 Correctional medical and mental health uses. *Where a Group I-2 occupancy in accordance with Section 308.4 and a Group I-3 occupancy occur together in building or portions of buildings, the following Subsections of Sections of 407 shall apply: 407.2.1; 407.2.2; 407.2.3; 407.3.1; 407.3.1.1; 407.4; 407.10.*

408.3.1.1 *Cell doors shall open outwardly or slide laterally.*

408.3.6 Exit discharge. ~~Exits are permitted to discharge into a fenced or walled courtyard. Enclosed yards or courts shall be of a size to accommodate all occupants, be located not less than 50 feet (15 240 mm) from the building and have an area of not less than 15 square feet (1.4 m2) per person.~~

408.3.6.1 *Exits are permitted to discharge into a fenced or walled courtyard. Enclosed yards or courts shall be of a size to accommodate all occupants, a minimum of 50 feet (15 240 mm) from the building with a net area of 3 square feet (~~1.4~~0.28 m2) per person. A gate shall be provided from the safe dispersal area to allow for the necessary relocation of occupants.*

408.3.6.2 *Exterior fenced enclosures and fenced enclosures utilized for recreational or activity purposes, used for exit termination for more than 20 persons, and which do not provide a safe dispersal area, shall have not less than two exits.*

408.3.6.3 *Fenced enclosure utilized for recreational or activity purposes only, for more than 49 people, and which do not provide a safe dispersal area, shall be provided with not less than two exits.*

408.3.6.4 *Fenced enclosures located on roofs of buildings one or more stories in height shall be provided with not less than two exits regardless of occupant load.*

408.3.6.5 *Fenced enclosures utilized for Central Control Buildings not normally occupied and not accessed by inmates or the general public are permitted to have only one exit from the fenced enclosure. These fenced enclosures shall only be occupied during emergency response conditions by not more than 29 prison staff occupants. Access to the fenced area shall be controlled remotely or at the gate with a key.*

408.3.8.1 *Where the number and arrangement of exits complies with the requirements of Chapter 10, other stairways which occur within the secure area of the detention facility and are not used for required exiting but are used primarily for the movement of inmates and security staff need not extend to the exterior.*

408.3.9 Dead-end balconies. *Exit balconies serving cell tiers shall not extend more than 50 feet (15 240 mm) beyond an exit stairway.*

408.3.10 Travel Distance. *The travel distance may be increased to 300 feet for portions of Group I-3 occupancies open only to staff or where inmates are escorted at all times by staff.*

408.3.11 Number of exits required. *In temporary holding areas of non-combustible construction, a second means of egress is required when the occupant load is greater than 20.*

408.4 Locks. Egress doors are permitted to be locked in accordance with the applicable use condition. Doors from a refuge area to the outisde are permitted to be locked with a key in lieu of locking methods described in Section 408.4.1. The keys to unlock the exterior doors shall be available at all times and the locks shall be operable from both sides of the door. *Security hardware may be used on any fire-rated door.*

408.4.3 Redundant operation. ~~Remote release, m~~*M*echanically operated sliding doors or ~~remote release~~, mechanically operated locks shall be provided with a mechanically operated release mechanism at each door~~, or~~ *and* shall be provided with a ~~redundant~~ remote release control.

408.5.1 Floor openings. ~~Openings in floors within a housing unit are permitted without a shaft enclosure, provided all of the following conditions are met:~~*The open space in front of a cell tier and connected chases, not exceeding two tiers in height, shall not be considered a vertical shaft and need not meet the fire-resistive shaft enclosure requirements of Section ~~708~~ 713.*

~~1. The entire normally occupied areas so interconnected are open and unobstructed so as to enable observation of the areas by supervisory personnel;~~
~~2. Means of egress capacity is sufficient for all occupants from all interconnected cell tiers and areas;~~
~~3. The height difference between the floor levels of the highest and lowest cell tiers shall not exceed 23 feet (7010 mm); and~~
~~4. Egress from any portion of the cell tier to an exit or exit access door shall not require travel on more than one additional floor level within the housing unit.~~

408.6 Smoke barrier. Occupancies in Group I-3 shall have smoke barriers complying with Sections 408.7 and 709 to divide every story occupied by residents for sleeping, or any other story having an occupant load of 50 or more persons, into no fewer than two smoke compartments.

Exception: Spaces having a direct exit to one of the following, provided that the locking arrangement of the doors involved complies with the requirements for doors at the smoke barrier for the use condition involved:

1. A public way.
2. A building separated from the resident housing area by a 2-hour fire-resistance-rated assembly or 50 feet (15 240 mm) of open space.
3. A secured yard or court having a holding space 50 feet (15 240 mm) from the housing area that provides 6 square feet (0.56 m2) or more of refuge area per occupant, including residents, staff and visitors.
4. Holding facility.

408.6.1 Smoke compartments. The number of residents in any smoke compartment shall be not more than 200. The distance of travel to a door in a smoke barrier from any room door required as exit access shall be not greater than 150 feet (45 720 mm). The distance of travel to a door in a smoke barrier from any point in a room shall be not greater than 200 feet (60 960 mm).

Exception: *The travel distance may be increased by 50 feet from areas open only to the staff.*

408.8 Subdivision of ~~resident housing~~ areas. ~~Sleeping areas and any contiguous day room, group activity space or other common spaces where residents are housed~~ *Each cell complex* shall be separated from other *cell complexes or other* spaces ~~in accordance with Sections 408.8.1 through 408.8.4~~ *by a smoke-tight partition.*

~~**408.8.1 Occupancy Conditions 3 and 4.** Each sleeping area in Occupancy Conditions 3 and 4 shall be separated from the adjacent common spaces by a smoke-tight partition where the distance of travel from the sleeping area through the common space to the corridor exceeds 50 feet (15 240 mm).~~

~~**408.8.2 Occupancy Condition 5.** Each sleeping area in Occupancy Condition 5 shall be separated from adjacent sleeping areas, corridors and common spaces by a smoketight partition. Additionally, common spaces shall be separated from the corridor by a smoke-tight partition.~~

~~**408.8.3 Openings in room face.** The aggregate area of openings in a solid sleeping room face in Occupancy Conditions 2, 3, 4 and 5 shall not exceed 120 square inches (0.77 m2). The aggregate area shall include all openings including door undercuts, food passes and grilles. Openings shall be not more than 36 inches (914 mm) above the floor. In Occupancy Condition 5, the openings shall be closeable from the room side.~~

~~408.8.4~~408.8.1 **Smoke-tight doors.** Doors in openings in partitions required to be smoke tight by Section 408.8 shall be substantial doors, of construction that will resist the passage of smoke. Latches and door closures are not required on cell doors.

408.9 Windowless buildings. For the purposes of this section, a windowless building or portion of a building is one with nonopenable windows, windows not readily breakable or without windows. ~~Windowless buildings shall be provided with an engineered smoke control system to provide a tenable environment for exiting from the smoke compartment in the area of fire origin in accordance with Section 909 for each windowless smoke compartment.~~

408.9.1 Smoke venting. *Windowless buildings containing use conditions 3, 4 or 5 shall be provided with an engineered smoke control system in accordance with Section 909, windows or doors, smoke vents, or equivalent means to provide a tenable environment for exiting from the smoke compartment in the area of fire origin. If windows or doors are used to meet this section, at least two windows or doors to the exterior must be provided at or above the highest occupied level in each smoke compartment, and the windows or doors must be operable or readily breakable and arranged to manually vent smoke.*
Exceptions:
1. Local adult detention facilities, CDCR and CDCR mental health housing facilities shall be exempt from this section when they meet each of the following criteria:
1.1. Are Type IA or IB construction
1.2. Are protected with sprinklers throughout in accordance with Section 903.3.1.1
1.3. Include a fire alarm system with smoke detection in accordance with NFPA 72 in the dayroom and/or corridor serving as exit access from the cells, reporting to a 24 hour central control at the institution
1.4. Include at least one exit from each housing unit that discharges directly to the exterior
1.5. The building is divided into at least two smoke compartments per Section 408.6.1
1.6. Staffing in the institution is sufficient to evacuate inmates from the smoke compartment 24 hours per day, as approved by the enforcing
2. No venting or smoke control is required when an engineering analysis shows an acceptable safe egress time compared to the onset of untenable conditions within a windowless building or portion of a windowless building and approved by the enforcing agency.

408.12 Emergency and standby power systems. *Special electrical systems, exit illumination, power installations and alternate on-site electrical supplies shall be provided for every building or portion of a building housing 10 or more inmates in a detention or correctional facility in accordance with the provisions of the California Electrical Code. There shall be a source of emergency power in all detention facilities capable of providing minimal lighting in all housing units, activity areas, corridors, stairs and central control points, and to maintain fire and life safety, security, communications and alarm systems.*

408.13 Windows. *In security areas within cell complexes sprinklered throughout, the area of glazing in one-hour corridor walls and smoke barrier walls shall not be restricted, provided:*

1. All openings are protected by fixed glazing listed and labeled for a fire-protection of at least 3/4 hour; or
2. Fixed security glazing set in noncombustible frames. Shall comply with the minimum requirements of one of the following test standards: ASTM F 1233-98, Class III glass, or; California Department of Corrections, CDC 860-94d, or H.P. White Laboratory, Inc., HPW-TP- 0500.02, Forced Entry Level III.

3. In lieu of the sizes set forth in CBC, the size and area of glazed assemblies shall conform to the following: Windows required to have a three-fourths-hour fire-resistive rating or windows protected by fixed security glazing, as delineated in Items 1 and 2 above, may have an area not greater than 84 square feet (7.8 m2) with neither width nor height exceeding 12 feet (3658 mm).

408.14 Safety padding. *Padding material used on walls, floors and ceilings in Group I and R-2.1 occupancies shall be of an approved type tested in accordance with the procedures established by State Fire Marshal Standard 12-8-100, Room Fire Test for Wall and Ceiling Materials, California Code of Regulations, Title 24, Part 12.*

408.15 Small management yards.

408.15.1 General. *The provisions of Sections 408.15.1 through 408.15.5 shall apply to small management yards. Small management yards may be used by a maximum of two occupants at any one time for a maximum of 2 hours per day.*

408.15.2 Construction. *Small management yards shall be constructed in accordance with all of the following:*

1. Constructed of Type IB noncombustible materials.
2. Fence material shall be noncombustible.
3. Have a maximum area of 150 square feet (14 m2).
4. Yard area covering shall not exceed 75 square feet (7 m2) or a maximum of 50 percent of the fenced enclosure.
5. Electrical lighting or devices of any type shall not be permitted within the yard.

Exception: *Low voltage devices dedicated for the operation of toilets.*

408.15.3 Fire protection system provisions.

408.15.3.1 Automatic sprinkler systems. *An automatic sprinkler system shall be provided in accordance with Section 903.3.1.1*

Exception: *Small management yards where a distance of 10 feet (3048 mm) is maintained from all buildings or structures and 4 feet (1220 mm) is maintained from containment fencing.*

408.15.3.2 Fire alarm systems. *An approved fire alarm system shall be provided in accordance with Section 907.*

Exception: *Small management yards where a distance of 10 feet (3048 mm) is maintained from all buildings or structures and 4 feet (1220 mm) is maintained from containment fencing.*

408.15.4 Means of egress. *Except as modified or as provided for in this section, the provisions of Section 408.3 and Chapter 10 shall apply. Small management yards shall comply with all of the following:*
1. Staff-controlled manual released locks shall be provided.
2. Staff escorting inmates to and from small management yards shall be equipped with radios and personal alarms to notify central control in case of a fire.
3. The safe dispersal area as defined by Section 1027.5 shall not be reduced due to placement of these yards.
4. An exit, remote from the main entrance is required in the containment fencing.

408.15.5 Special provisions. *Inmate exercise clothing and toilet paper tissue shall be the only combustible materials permitted in small management yards.*

409.3 Projection room and equipment ventilation. Ventilation shall be provided in accordance with the ~~International~~*California Mechanical Code.*

411.1 General. Special amusement buildings having an occupant load of 50 or more shall comply with the requirements for the appropriate Group A occupancy and Sections 411.1 through 411.8. Special amusement buildings having an occupant load of less than 50 shall comply with the requirements for a Group B occupancy and Sections 411.1 through 411.8.

Exception: Special amusement buildings or portions thereof that are without walls or a roof and constructed to prevent the accumulation of smoke need not comply with this section.

For flammable decorative materials, see the ~~*International*~~*California* Fire Code.

412.1 General. Aircraft-related occupancies shall comply with Sections 412.1 through 412.8 and the ~~*International*~~*California* Fire Code.

412.6.1 Occupancy group. Aircraft paint hangars shall be classified as Group H-2. Aircraft paint hangars shall comply with the applicable requirements of this code and the ~~*International*~~*California* Fire Code for such occupancy.

412.6.6 Ventilation. Aircraft paint hangars shall be provided with ventilation as required in the ~~*International*~~*California Mechanical Code.*

413.1 General. High-piled stock or rack storage in any occupancy group shall comply with the ~~*International*~~*California* Fire Code.

414.1.1 Other provisions. Buildings and structures with an occupancy in Group H shall comply with this section and the applicable provisions of Section 415 and the ~~*International*~~*California Fire Code. For Group L occupancies see Section 443453.*

414.1.2 Materials. The safe design of hazardous material occupancies is material dependent. Individual material requirements are also found in Sections 307 and 415, and in the ~~*International*~~*California Mechanical Code* and the ~~*International*~~*California Fire Code.*

414.1.2.1 Aerosols. Level 2 and 3 aerosol products shall be stored and displayed in accordance with the ~~*International*~~*California Fire Code.* See Section 311.2 and the ~~*International*~~*California Fire Code* for occupancy group requirements.

414.2 Control areas. Control *areas* shall comply with Sections 414.2.1 through 414.2.5 and the ~~*International*~~*California Fire Code.*

414.2.5 Hazardous material in Group M display and storage areas and in Group S storage areas. The aggregate quantity of nonflammable solid and nonflammable or noncombustible liquid hazardous materials permitted within a single control area of a Group M display and storage area, a Group S storage area or an outdoor control area is permitted to exceed the maximum allowable quantities per control area specified in Tables 307.1(1) and 307.1(2) without classifying the building or use as a Group H occupancy, provided that the materials are displayed and stored in accordance with the ~~*International*~~*California* Fire Code and quantities do not exceed the maximum allowable specified in Table 414.2.5(1).

In Group M occupancy wholesale and retail sales uses, indoor storage of flammable and combustible liquids shall not exceed the maximum allowable quantities per control area as indicated in Table 414.2.5(2), provided that the materials are displayed and stored in accordance with the ~~*International*~~*California* Fire Code.

The maximum quantity of aerosol products in Group M occupancy retail display areas, storage areas adjacent to retail display areas and retail storage areas shall be in accordance with the ~~*International*~~*California* Fire Code.

TABLE 414.2.5(1)
MAXIMUM ALLOWABLE QUANTITY PER INDOOR AND OUTDOOR CONTROL AREA IN GROUP M AND S OCCUPANCIES NONFLAMMABLE SOLIDS AND NONFLAMMABLE AND NONCOMBUSTIBLE LIQUIDS[d,e,f]

[Table not shown for clarity]

a. Hazard categories are as specified in the ~~*International*~~*California* Fire Code.
b. Maximum allowable quantities shall be increased 100 percent in buildings that are sprinklered in accordance with Section 903.3.1.1. When Note c also applies, the increase for both notes shall be applied accumulatively.
c. Maximum allowable quantities shall be increased 100 percent when stored in approved storage cabinets, in accordance with the ~~*International*~~*California* Fire Code. When Note b also applies, the increase for both notes shall be applied accumulatively.
d. See Table 414.2.2 for design and number of control areas.
e. Allowable quantities for other hazardous material categories shall be in accordance with Section 307.
f. Maximum quantities shall be increased 100 percent in outdoor control areas.

g. Maximum amounts shall be increased to 2,250 pounds when individual packages are in the original sealed containers from the manufacturer or packager and do not exceed 10 pounds each.
h. Maximum amounts shall be increased to 4,500 pounds when individual packages are in the original sealed containers from the manufacturer or packager and do not exceed 10 pounds each.
i. The permitted quantities shall not be limited in a building equipped throughout with an automatic sprinkler system in accordance with Section 903.3.1.1.
j. Quantities are unlimited in an outdoor control area.

TABLE 414.2.5(2)
MAXIMUM ALLOWABLE QUANTITY OF FLAMMABLE AND COMBUSTIBLE LIQUIDS IN WHOLESALE AND RETAIL SALES OCCUPANCIES PER CONTROL AREA[a]

TYPE OF LIQUID	MAXIMUM ALLOWABLE QUANTITY PER CONTROL AREA (gallons)		
	Sprinklered in accordance with note b densities and arrangements	Sprinklered in accordance with Tables 5704.3.6.3(4) through 5704.3.6.3(8) and 5704.3.7.5.1 of the ~~*International*~~*California* Fire Code	Nonsprinklered
Class IA	60	60	30
Class IB, IC, II and IIIA	7,500[c]	15,000[c]	1,600
Class IIIB	Unlimited	Unlimited	13,200

[Table Notes not shown for clarity]

414.3 Ventilation. Rooms, areas or spaces in which explosive, corrosive, combustible, flammable or highly toxic dusts, mists, fumes, vapors or gases are or may be emitted due to the processing, use, handling or storage of materials shall be mechanically ventilated where required by this code, the ~~*International*~~*California* Fire Code or the ~~*International*~~*California* Mechanical Code.

Emissions generated at workstations shall be confined to the area in which they are generated as specified in the ~~*International*~~*California* Fire Code and the ~~*International*~~*California* Mechanical Code.

414.5 Inside storage, dispensing, *handling* and use. The inside storage, dispensing and use of hazardous materials shall be in accordance with Sections 414.5.1 through ~~414.5.3~~414.5.4 of this code and the ~~*International*~~*California Fire Code*.

414.5.1 Explosion control. Explosion control shall be provided in accordance with the ~~International~~*California* Fire Code as required by Table 414.5.1 where quantities of hazardous materials specified in that table exceed the maximum allowable quantities in Table 307.1(1) or where a structure, room or space is occupied for purposes involving explosion hazards as required by Section 415 or the ~~International~~*California* Fire Code.

TABLE 414.5.1
EXPLOSION CONTROL REQUIREMENTS[a, h]
[Table not shown for clarity]

a. See Section 414.1.3.
b. See the ~~*International*~~*California* Fire Code.
c. As generated during manufacturing or processing.
d. Storage or use.
e. In open use or dispensing.
f. Rooms containing dispensing and use of hazardous materials when an explosive environment can occur because of the characteristics or nature of the hazardous materials or as a result of the dispensing or use process.
g. A method of explosion control shall be provided when Class 2 water-reactive materials can form potentially explosive mixtures.
h. Explosion venting is not required for Group H-5 fabrication areas complying with Section 415.11.1 and the ~~*International*~~*California* Fire Code.

414.5.2 Emergency or standby power. Where required by the ~~International~~*California* Fire Code or this code, mechanical ventilation, treatment systems, temperature control, alarm, detection or other electrically operated systems shall be provided with emergency or standby power in accordance with Section 2702. For storage and use

areas for highly toxic or toxic materials, see Sections 6004.2.2.8 and 6004.3.4.2 of the ~~International~~*California* Fire Code.

414.5.3 Spill control, drainage and containment. Rooms, buildings or areas occupied for the storage of solid and liquid hazardous materials shall be provided with a means to control spillage and to contain or drain off spillage and fire protection water discharged in the storage area where required in the ~~International~~*California* Fire Code. The methods of spill control shall be in accordance with the ~~International~~*California* Fire Code.

~~414.5.5~~414.5.4 Hazardous material handling. *The handling of hazardous materials shall be in accordance with California Fire Code Section ~~2705~~5003.*

414.6 Outdoor storage, dispensing and use. The outdoor storage, dispensing and use of hazardous materials shall be in accordance with the ~~International~~*California* Fire Code.

415.1 Scope. The provisions of Sections 415.1 through 415.11 shall apply to the storage and use of hazardous materials in excess of the maximum allowable quantities per control area listed in Section 307.1. Buildings and structures with an occupancy in Group H shall also comply with the applicable provisions of Section 414 and the ~~International~~*California Fire Code.*

415.6 Fire separation distance. Group H occupancies shall be located on property in accordance with the other provisions of this chapter. In Groups H-2 and H-3, not less than 25 percent of the perimeter wall of the occupancy shall be an exterior wall.

Exceptions:
1. Liquid use, dispensing and mixing rooms having a floor area of not more than 500 square feet (46.5 m2) need not be located on the outer perimeter of the building where they are in accordance with the ~~International~~*California Fire Code* and NFPA 30.
2. Liquid storage rooms having a floor area of not more than 1,000 square feet (93 m2) need not be located on the outer perimeter where they are in accordance with the ~~International~~*California Fire Code* and NFPA 30.
3. Spray paint booths that comply with the ~~International~~*California Fire Code* need not be located on the outer perimeter.

415.6.1 Group H occupancy minimum fire separation distance. Regardless of any other provisions, buildings containing Group H occupancies shall be set back to the minimum fire separation distance as set forth in Sections 415.6.1.1 through 415.6.1.4. Distances shall be measured from the walls enclosing the occupancy to lot lines, including those on a public way. Distances to assumed lot lines established for the purpose of determining exterior wall and opening protection are not to be used to establish the minimum fire separation distance for buildings on sites where explosives are manufactured or used when separation is provided in accordance with the quantity distance tables specified for explosive materials in the ~~International~~*California Fire Code.*

415.6.1.1 Group H-1. Group H-1 occupancies shall be set back not less than 75 feet (22 860 mm) and not less than required by the ~~International~~*California Fire Code.*

Exception: Fireworks manufacturing buildings separated in accordance with NFPA 1124.

415.6.1.4 Explosive materials. Group H-2 and H-3 occupancies containing materials with explosive characteristics shall be separated as required by the ~~International~~*California* Fire Code. Where separations are not specified, the distances required shall be determined by a technical report issued in accordance with Section 414.1.3.

TABLE 415.6.2
DETACHED BUILDING REQUIRED
[Table not shown for clarity]

For SI: 1 ton = 906 kg, 1 cubic foot = 0.02832 m3, 1 pound = 0.454 kg.
a. For materials that are detonable, the distance to other buildings or lot lines shall be in accordance with Chapter 56 of the InternationalCalifornia Fire Code based on trinitrotoluene (TNT) equivalence of the material. For materials classified as explosives, see Chapter 56 of the International Fire Code.
b. "Maximum Allowable Quantity" means the maximum allowable quantity per control area set forth in Table 307.1(1).

c. Limited to Division 1.4 materials and articles, including articles packaged for shipment, that are not regulated as an explosive under Bureau of Alcohol, Tobacco, Firearms and Explosives (BATF) regulations or unpackaged articles used in process operations that do not propagate a detonation or deflagration between articles, provided the net explosive weight of individual articles does not exceed 1 pound.

415.9 Group H-2. Occupancies in Group H-2 shall be constructed in accordance with Sections 415.9.1 through 415.9.3 and the ~~*International*~~*California Fire Code.*

415.9.1 Flammable and combustible liquids. The storage, handling, processing and transporting of flammable and combustible liquids in Group H-2 and H-3 occupancies shall be in accordance with Sections 415.8.2.1 through 415.9.1.1, the ~~*International*~~*California Mechanical Code* and the ~~*International*~~*California Fire Code.*

415.9.1.3 Tanks. Storage tanks shall be approved tanks conforming to the requirements of the ~~*International*~~*California Fire Code.*

415.9.1.4 Leakage containment. A liquid-tight containment area compatible with the stored liquid shall be provided. The method of spill control, drainage control and secondary containment shall be in accordance with the ~~*International*~~*California Fire Code.*

Exception: Rooms where only double-wall storage tanks conforming to Section 415.9.1.3 are used to store Class I, II and IIIA flammable and combustible liquids shall not be required to have a leakage containment area.

415.9.1.6 Tank vent. Storage tank vents for Class I, II or IIIA liquids shall terminate to the outdoor air in accordance with the ~~*International*~~*California Fire Code.*

415.9.1.7 Room ventilation. Storage tank areas storing Class I, II or IIIA liquids shall be provided with mechanical ventilation. The mechanical ventilation system shall be in accordance with the ~~*International*~~*California Mechanical Code* and the ~~*International*~~*California Fire Code.*

415.9.1.8 Explosion venting. Where Class I liquids are being stored, explosion venting shall be provided in accordance with the ~~*International*~~*California Fire Code.*

415.9.2 Liquefied petroleum gas facilities. The construction and installation of liquefied petroleum gas facilities shall be in accordance with the requirements of this code, the ~~*International*~~*California Fire Code,* the ~~*International*~~*California Mechanical Code*, the ~~International Fuel Gas Code~~*California Plumbing Code* and NFPA 58.

415.9.3 Dry cleaning plants. The construction and installation of dry cleaning plants shall be in accordance with the requirements of this code, the ~~*International*~~*California Mechanical Code*, the ~~*International*~~*California Plumbing Code* and NFPA 32. Dry cleaning solvents and systems shall be classified in accordance with the ~~*International*~~*California Fire Code.*

415.10 Groups H-3 and H-4. Groups H-3 and H-4 shall be constructed in accordance with the applicable provisions of this code and the ~~*International*~~*California Fire Code.*

415.11 Group H-5. In addition to the requirements set forth elsewhere in this code, Group H-5 shall comply with the provisions of Sections 415.11.1 through 415.10.11 and the ~~*International*~~*California Fire Code.*

415.11.1.7 Transporting hazardous production materials to fabrication areas. HPM shall be transported to fabrication areas through enclosed piping or tubing systems that comply with Section 415.11.6 through service *corridors* complying with Section 415.11.3, or in corridors as permitted in the exception to Section 415.11.2. The handling or transporting of HPM within service corridors shall comply with the ~~*International*~~*California Fire Code.*

415.11.4 Storage of hazardous production materials. Storage of hazardous production materials (HPM) in fabrication areas shall be within approved or listed storage cabinets or gas cabinets or within a workstation. The storage of HPM in quantities greater than those listed in Section 5004.2 of the ~~*International*~~*California Fire Code* shall be in liquid storage rooms, HPM rooms or gas rooms as appropriate for the materials stored. The storage of other hazardous materials shall be in accordance with other applicable provisions of this code and the ~~*International*~~*California Fire Code.*

415.11.7.2 Gas detection system operation. The continuous gas detection system shall be capable of monitoring the room, area or equipment in which the gas is located at or below all the following gas concentrations:
1. Immediately dangerous to life and health (IDLH) values where the monitoring point is within an exhausted enclosure, ventilated enclosure or gas cabinet.
2. Permissible exposure limit (PEL) levels when the monitoring point is in an area outside an exhausted enclosure, ventilated enclosure or gas cabinet.
3. For flammable gases, the monitoring detection threshold level shall be vapor concentrations in excess of 25 percent of the lower flammable limit (LFL) where the monitoring is within or outside an exhausted enclosure, ventilated enclosure or gas cabinet.
4. Except as noted in this section, monitoring for highly toxic and toxic gases shall also comply with Chapter 60 of the ~~*International*~~*California Fire Code*.

415.11.9.3 Signals. The emergency control station shall receive signals from emergency equipment and alarm and detection systems. Such emergency equipment and alarm and detection systems shall include, but not be limited to, the following where such equipment or systems are required to be provided either in this chapter or elsewhere in this code:

1. Automatic sprinkler system alarm and monitoring systems.
2. Manual fire alarm systems.
3. Emergency alarm systems.
4. Continuous gas detection systems.
5. Smoke detection systems.
6. Emergency power system.
7. Automatic detection and alarm systems for pyrophoric liquids and Class 3 water-reactive liquids required in Section 2705.2.3.4 of the ~~*International*~~*California* Fire Code.
8. Exhaust ventilation flow alarm devices for pyrophoric liquids and Class 3 water-reactive liquids cabinet exhaust ventilation systems required in Section 1805.2.3.4 of the ~~*International*~~*California Fire Code*.

415.11.10.1 Required electrical systems. Emergency power shall be provided for electrically operated equipment and connected control circuits for the following systems:

1. HPM exhaust ventilation systems.
2. HPM gas cabinet ventilation systems.
3. HPM exhausted enclosure ventilation systems.
4. HPM gas room ventilation systems.
5. HPM gas detection systems.
6. Emergency alarm systems.
7. Manual and automatic fire alarm systems.
8. Automatic sprinkler system monitoring and alarm systems.
9. Automatic alarm and detection systems for pyrophoric liquids and Class 3 water-reactive liquids required in Section 2705.2.3.4 of the ~~*International*~~*California Fire Code*.
10. Flow alarm switches for pyrophoric liquids and Class 3 water-reactive liquids cabinet exhaust ventilation systems required in Section 2705.2.3.4 of the ~~*International*~~*California Fire Code*.
11. Electrically operated systems required elsewhere in this code or in the ~~*International*~~*California Fire Code* applicable to the use, storage or handling of HPM.

415.11.11 Automatic sprinkler system protection in exhaust ducts for HPM. An approved automatic sprinkler system shall be provided in exhaust ducts conveying gases, vapors, fumes, mists or dusts generated from HPM in accordance with Sections 415.11.11.1 through 415.11.11.3 and the ~~*International*~~*California Mechanical Code*.

~~415.11~~415.12 Group H occupancies located above the 10th story.

~~415.11.1~~415.12.1 Fire – smoke barrier. *Any story containing a Group H occupancy above the 10th story shall be subdivided by a fire-smoke barrier constructed as a fire barrier having a fire resistance rating of not less than 2 hours and shall also comply with the smoke barrier requirements of Section 710. The 2-hour fire-smoke barrier shall be in accordance with Sections 415.11.1.1 through 415.11.1.5.*

~~415.11.1.1~~415.12.1.1 *The 2-hour fire-smoke barrier shall be continuous from exterior wall to exterior wall.*

~~415.11.1.2~~415.12.1.2 The fire-smoke barrier shall divide the story so that the square footage on each side of the 2-hour fire-smoke barrier is not less than 30 percent of the total floor area.

~~415.11.1.3~~415.12.1.3 A minimum of one door opening shall be provided in the 2-hour fire-smoke barrier for emergency access.

~~415.11.1.4~~415.12.1.4 Each side of the 2-hour fire-smoke barrier shall be designed as a separate smoke zone designed in accordance with Section 909.6.

~~415.11.1.5~~415.12.1.5 The area on each side of the 2-hour fire-smoke barrier shall be served by a minimum of one exit enclosure in accordance with Section 1022.

~~415.12~~415.13 ***Elevators and elevator lobbies above the 10th story.*** *Any story containing a Group H occupancy above the 10th story shall be provided with elevators and elevator lobbies in accordance with Sections ~~415.12.1~~ 415.13.1 through ~~415.12.3~~415.13.3.*

~~415.12.1~~415.13.1 An elevator that serves every story of the building shall be provided on each side of the 2-hour fire-smoke barrier.

~~415.12.2~~415.13.2 An elevator lobby shall be provided on each side of the 2-hour fire-smoke barrier at each floor in accordance with Section 708.14.1. Exceptions to 708.14.1 shall not apply.

~~415.12.3~~415.13.3 The elevator and its associated elevator lobbies and elevator machine rooms shall be pressurized in accordance with Section 909.6.

416.1 General. The provisions of this section shall apply to the construction, installation and use of buildings and structures, or parts thereof, for the application of flammable finishes. Such construction and equipment shall comply with the *~~International~~California Fire Code.*

416.2.2 Ventilation. Mechanical ventilation and interlocks with the spraying operation shall be in accordance with the *~~International~~California* Mechanical Code.

416.3 Spraying spaces. Spraying spaces shall be ventilated with an exhaust system to prevent the accumulation of flammable mist or vapors in accordance with the *~~International~~California Mechanical Code.* Where such spaces are not separately enclosed, noncombustible spray curtains shall be provided to restrict the spread of flammable vapors.

416.4 Spray booths. Spray booths shall be designed, constructed and operated in accordance with the *~~International~~California Fire Code.*

419.8 Ventilation. The applicable ventilation requirements of the *~~International~~California Mechanical Code* shall apply to each area within the live/work unit for the function within that space.

SECTION 420
GROUPS ~~I-1,~~R-1, R-2, *R-2.1*, R-3, *R-3.1* and R-4

420.1 General. Occupancies in Groups ~~I-1,~~R-1, R-2, *R-2.1*, R-3, *R-3.1* and R-4 shall comply with the provisions of Sections 420.1 through 420.6 and other applicable provisions of this code.

420.4 Smoke barriers in Group ~~I-1, Condition 2~~*R-2.1*. Smoke barriers shall be provided in Group ~~I-1, Condition 2~~*R-2.1*, to subdivide every story used by persons receiving care, treatment or sleeping and to provide other stories with an occupant load of 50 or more persons, into no fewer than two smoke compartments. Such stories shall be divided into smoke compartments with an area of not more than 22,500 square feet (2092 m2) and the distance of travel from any point in a smoke compartment to a smoke barrier door shall not exceed 200 feet (60 960 mm). The smoke barrier shall be in accordance with Section 709.

420.5 Automatic sprinkler system. Group R occupancies shall be equipped throughout with an automatic sprinkler system in accordance with Section 903.2.8. Group ~~I-1~~*R-2.1* occupancies shall be equipped throughout with an automatic sprinkler system in accordance with Section 903.2.6. Quick response or residential automatic sprinklers shall be installed in accordance with Section 903.3.2.

420.6 Fire alarm systems and smoke alarms. Fire alarm systems and smoke alarms shall be provided in Group ~~I-1,~~ R-1, R-2, *R-2.1* and R-4 occupancies in accordance with Sections 907.2.6, 907.2.8, 907.2.9 and 907.2.10, respectively. Singleor multiple- station smoke alarms shall be provided in Groups ~~I-1,~~ R-2, *R-2.1*, R-3 and R-4 in accordance with Section 907.2.11.

~~420.9~~420.10 Licensed 24-hour care facilities in a Group R-2.1, R-3.1 or R-4 occupancy. *See Section ~~425~~435 for Special Provisions for licensed 24-hour care facilities in a Group R-2.1, R-3.1, or R-4 occupancy.*

~~***420.10 Existing Group R Occupancies. See Chapter 34.***~~

SECTION [F] 426
COMBUSTIBLE DUSTS, GRAIN PROCESSING AND STORAGE

426.1 Combustible dusts, grain processing and storage. The provisions of Sections 426.1.1 through 426.1.7 shall apply to buildings in which materials that produce combustible dusts are stored or handled. Buildings that store or handle combustible dusts shall comply with the applicable provisions of NFPA 61, NFPA 85, NFPA 120, NFPA 484, NFPA 654, NFPA 655 and NFPA 664 and the ~~International~~*California* Fire Code.

426.1.4 Explosion control. Explosion control shall be provided as specified in the ~~International~~*California* Fire Code, or spaces shall be equipped with the equivalent mechanical ventilation complying with the ~~International~~*California* Mechanical Code.

SECTION ~~425~~435
SPECIAL PROVISIONS FOR LICENSED 24-HOUR CARE FACILITIES IN A GROUP R-2.1, R-3.1, R-4 [SFM]

~~425.1~~435.1 Scope. *The provisions of this section shall apply to 24-hour care facilities in a Group R-2.1, R-3.1 or R-4 occupancy licensed by a governmental agency.*

~~425.2~~435.2 General. *The provisions in this section shall apply in addition to general requirements in this code.*

~~425.2.1~~435.2.1 Restraint shall not be practiced in a Group R-2.1, R-3.1 or R-4 Occupancies.

Exception: *Occupancies which meet all the requirements for a Group I-3 Occupancy.*

~~425.2.2~~435.2.2 Pursuant to Health and Safety Code Section 13133, regulations of the state fire marshal pertaining to occupancies classified as Residential Facilities (RF) and Residential Care Facilities for the Elderly (RCFE) shall apply uniformly throughout the state and no city, county, city and county, including a charter city or charter county, or fire protection district shall adopt or enforce any ordinance or local rule or regulation relating to fire and panic safety which is inconsistent with these regulations. A city, county, city and county, including a charter city or charter county may pursuant to Health and Safety Code Section 13143.5, or a fire protection district may pursuant to Health and Safety Code Section 13869.7, adopt standards more stringent than those adopted by the state fire marshal that are reasonably necessary to accommodate local climate, geological or topographical conditions relating to roof coverings for Residential Care Facilities for the Elderly.

Exception: *Local regulations relating to roof coverings in facilities licensed as a residential care facility for the elderly (RCFE) per Health and Safety Code Section 13133.*

~~425.3~~435.3 Building height and area provisions.

~~425.3.1~~435.3.1 Group R-2.1, R-3.1 and R-4 shall be constructed in accordance with Table 503.

~~425.3.2~~435.3.2 Limitations six or less clients. *Group R-3.1 occupancies where nonambulatory clients are housed above the first story, having more than two stories in height or having more than 3,000 square feet (279 m2) of floor area above the first story shall not be of less than one-hour fire-resistance-rated construction throughout. In Group R3.1 occupancies housing a bedridden client, the client sleeping room shall not be located above or below the first story.*

Exception: *Clients who become bedridden as a result of a temporary illness as defined in Health and Safety Code Sections 1566.45, 1568.0832 and 1569.72. A temporary illness is an illness, which persists for 14 days or less. A bedridden client may be retained in excess of the 14 days upon approval by the Department of Social Services and may continue to be housed on any story in a Group R-3.1 occupancy classified as a licensed residential facility. Every licensee admitting or retaining a bedridden resident shall, within 48 hours of the resident's admission or retention in the facility, notify the local fire authority with jurisdiction of the estimated length of time the resident will retain his or her bedridden status in the facility.*

~~425.3.3~~435.3.3 Limitations seven or more clients. *Group R-4 occupancies where nonambulatory clients are housed above the first story and there is more than 3,000 square feet (279 m2) of floor area above the first story or housing more than 16 clients above the first story shall be constructed of not less than one-hour fire-resistance-rated construction throughout.*

~~425.3.4~~435.3.4 Nonambulatory elderly clients. *Group R-4 occupancies housing nonambulatory elderly clients shall be of not less than one-hour fire-resistance-rated construction throughout.*

~~425.4~~435.4 Type of construction provisions.

~~425.4.1~~435.4.1 *Group R-2.1, occupancies are not permitted in nonfire-resistance-rated construction, see Health and Safety Code Section 13131.5.*

~~425.5~~435.5 Fire-resistance-rated construction provisions.

~~425.5.1~~435.5.1 Smoke barriers required. *Group R-2.1 and R-4 occupancies licensed as a Residential Care Facility (RCF) with individual floor areas over 6,000 square feet (557 m2) per floor, shall be provided with smoke barriers, constructed in accordance with Section 710. Group R-2.1 occupancies housing bedridden clients shall be provided with smoke barriers constructed in accordance with Section 710 regardless of the number of clients. When smoke barriers are required, the area within a smoke compartment shall not exceed 22,500 square feet (2090 m2) nor shall its travel distance exceed 200 feet (60 960 mm). Such smoke barriers shall divide the floor as equally as possible.*

~~425.5.2~~435.5.2 Smoke partitions. *Group R-2.1 occupancies where smoke partitions are required, framing shall be covered with noncombustible materials having an approved thermal barrier with an index of not less than 15 in accordance with FM 4880, UL 1040, NFPA 286 or UL 1715.*

~~425.5.3~~435.5.3 Independent egress. *At least two means of egress shall be provided from each smoke compartment created by smoke barriers. Means of egress may pass through adjacent compartments provided it does not return through the smoke compartment from which means of egress originated.*

~~425.6~~435.6 Interior finish provisions.

~~425.6.1~~435.6.1 Interior wall and ceiling finish. *Group R-3.1 occupancies housing a bedridden client shall comply with interior wall and ceiling finish requirements specified for Group I-2 occupancies in Table 803.9.*

~~425.6.2~~435.6.2 Safety padding. *Padding material used on walls, floors and ceilings in Group I and R-2.1 occupancies shall be of an approved type tested in accordance with the procedures established by State Fire Marshal Standard 12-8-100, Room Fire Test for Wall and Ceiling Materials, California Code of Regulations, Title 24, Part 12.*

~~425.7~~435.7 Fire protection system provisions.

~~425.7.1~~435.7.1 Automatic sprinkler systems in Group R-2.1, R-3.1 and R-4 occupancies. *An automatic sprinkler system shall be installed where required in Section 903.*

~~425.7.2~~435.7.2 Fire alarm systems in Group R-2.1 and R-4 occupancies. *An approved fire alarm system shall be installed where required in Section 907.*

~~425.7.3~~435.7.3 Smoke alarms in Groups R-2.1, R-3.1 and R-4 occupancies. *Smoke alarms shall be installed where required in Section 907.2.11.2.*

~~425.7.4~~435.7.4 **Hearing impaired.** *See Section 907.5.2.3.5.*

~~425.8~~435.8 **Means of egress provisions.**

~~425.8.1~~435.8.1 **General.** *In addition to the general means of egress requirements of Chapter 10, this section shall apply to Group R-2.1, R-3.1 and R-4 occupancies.*

~~425.8.2~~435.8.2 **Number of exits.**

~~425.8.2.1~~435.8.2.1 *Group R-2.1, R-3.1 and R-4 occupancies shall have a minimum of two exits.*

Exception: *Ancillary use areas or occupancies shall have egress as required by Section 1021.*

~~425.8.3~~435.8.3 **Egress arrangements.**

~~425.8.3.1~~435.8.3.1 *Egress through adjoining dwelling units shall not be permitted.*

~~425.8.3.2~~435.8.3.2 **Group R-3.1 occupancies housing nonambulatory clients.** *In a Group R-3.1 occupancy, bedrooms used by nonambulatory clients shall have access to at least one of the required exits which shall conform to one of the following:*

1. Egress through a hallway or area into a bedroom in the immediate area which has an exit directly to the exterior and the corridor/hallway is constructed consistent with the dwelling unit interior walls. The hallway shall be separated from common areas by a solid wood door not less than 1 3/8 inch (35 mm) in thickness, maintained self-closing or shall be automatic closing by actuation of a smoke detector installed in accordance with Section 716.5.9.
2. Egress through a hallway which has an exit directly to the exterior. The hallway shall be separated from the rest of the house by a wall constructed consistent with the dwelling unit interior walls and opening protected by a solid wood door not less than 1 3/8 inch (35 mm) in thickness, maintained self-closing or shall be automatic closing by actuation of a smoke detector installed in accordance with Section 716.5.9.
3. Direct exit from the bedroom to the exterior shall be of a size as to permit the installation of a door not less than 3 feet (914 mm) in width and not less than 6 feet 8 inches (2032 mm) in height. When installed, doors shall be capable of opening at least 90 degrees and shall be so mounted that the clear width of the exit way is not less than 32 inches (813 mm).
4. Egress through an adjoining bedroom which exits to the exterior.

~~425.8.3.3~~435.8.3.3 **Group R-3.1 occupancies housing only one bedridden client.** *In Group R-3.1 occupancies housing a bedridden client and not provided with an approved automatic sprinkler system, all of the following shall apply:*

1. In Group R-3.1 occupancies housing a bedridden client, a direct exit to the exterior of the residence shall be provided from the client sleeping room.
2. Doors to a bedridden client's sleeping room shall be of a self-closing, positive latching 1-3/8 inch solid wood door. Such doors shall be provided with a gasket so installed as to provide a seal where the door meets the jam on both sides and across the top. Doors shall be maintained selfclosing or shall be automatic closing by actuation of a smoke alarm in accordance with Section 716.5.9.
3. Group R-3.1 occupancies housing a bedridden client, shall not have a night latch, dead bolt, security chain or any similar locking device installed on any interior door leading from a bedridden client's sleeping room to any interior area such as a corridor, hallway and or general use areas of the residence in accordance with Chapter 10.
4. The exterior exit door to a bedridden client's sleeping room shall be operable from both the interior and exterior of the residence.
5. Every required exit doorway from a bedridden client sleeping room shall be of a size as to permit the installation of a door not less than 3 feet (914 mm) in width and not less than 6 feet 8 inches (2032 mm) in height. When installed in exit doorways, exit doors shall be capable of opening at least 90 degrees and shall be so mounted that the clear width of the exit way is not less than 32 inches (813 mm).
***Note:** A sliding glass door can be used as an exterior exit doorway as long as it is operable from the inside and outside and the clear width of the exit way is not less than 32 inches (813 mm).*

~~425.8.3.4~~435.8.3.4 **Intervening rooms.** *A means of exit shall not pass through more than one intervening room. A means of egress shall not pass through kitchens, storerooms, closets, garages or spaces used for similar purposes.*

Exception: *Kitchens which do not form separate rooms by construction.*

~~425.8.4~~435.8.4 Corridors.

~~425.8.4.1~~435.8.4.1 Unless specified by Section ~~425.8.4~~435.8.4, corridors serving Group R-2.1 and Group R-4 occupancies shall comply with Section 1018.1.

In Group R-2.1 occupancies provided with fire sprinklers throughout and which are required to have rated corridors, door closers need not be installed on doors to client sleeping rooms.

~~425.8.4.3~~435.8.4.3 In a Group R-2.1 and Group R-4 occupancies having smoke barriers, cross-corridor doors in corridors 6 feet (1829 mm) or less in width shall have, as a minimum, a door 36 inches (914 mm) in width.

~~425.8.5~~435.8.5 Changes in level. *In Group R-3.1 occupancies housing nonambulatory clients interior changes in level up to 0.25 inch (6 mm) may be vertical and without edge treatment. Changes in level between 0.25 inch (6 mm) and 0.5 inch (12.7 mm) shall be beveled with a slope no greater than 1 unit vertical in 2 units horizontal (50 percent slope). Changes in level greater than 0.5 inch (12.7 mm) shall be accomplished by means of a ramp.*

~~425.8.6~~435.8.6 Stairways.

~~425.8.6.1~~435.8.6.1 Group R-2.1 and Group R-4 occupancies housing more than six nonambulatory clients above the first floor shall be provided with two vertical exit enclosures. Stairway enclosures shall be in compliance with Section 1022. Exceptions to Section 1022 shall not apply in facilities licensed as a 24-hour care facility

~~425.8.6.2~~435.8.6.2 Group R-3.1 occupancies may continue to use existing stairways (except for winding and spiral stairways which are not permitted as a required means of egress) provided the stairs have a maximum rise of 8 inches (203 mm) with a minimum run of 9 inches (229 mm). The minimum stairway width may be 30 inches (762 mm).

~~425.8.7.1~~435.8.7.1 Doors within floor separations. *Doors within such floor separations shall be tight fitting solid wood at least 13/8 inches (35 mm) in thickness. Door glazing shall not exceed 1296 square inches (32 918 mm2) with no dimension greater than 54 inches (1372 mm). Such doors shall be positive latching, smoke gasketed and shall be automatic-closing by smoke detection.*

~~425.8.8~~435.8.8 Fences and gates. *Grounds of a Residential Care Facility for the Elderly serving Alzheimer clients may be fenced and gates therein equipped with locks, provided safe dispersal areas are located not less than 50 feet (15 240 mm) from the buildings. Dispersal areas shall be sized to provide an area of not less than 3 square feet (0.28m2) per occupant. Gates shall not be installed across corridors or passageways leading to such dispersal areas unless they comply with egress requirements.*

~~425.8.9~~435.8.9 Basement exits. *One exit is required to grade level when the basement is accessible to clients.*

~~425.8.10~~435.8.10 Delayed egress locks. *See Section ~~1008.1.9.7~~1010.1.9.7.*

~~425.9~~435.9 Request for alternate means of protection for facilities housing bedridden clients. *Request for alternate means of protection shall apply to Sections ~~425~~435 through ~~425.9~~435.9. Request for approval to use an alternative material, assembly or materials, equipment, method of construction, method of installation of equipment, or means of protection shall be made in writing to the local fire authority having jurisdiction by the facility, client or the client's authorized representative. Sufficient evidence shall be submitted to substantiate the need for an alternate means of protection. The facility, client or the client's representative or the local fire authority having jurisdiction may request a written opinion from the State Fire Marshal concerning the interpretation of the regulations promulgated by the State Fire Marshal for a particular factual dispute. The State Fire Marshal shall issue the written opinion within 45 days following the request. Approval of a request for use of an alternative material, assembly or materials, equipment, method of construction, method of installation of equipment, or means of protection made pursuant to this section shall be limited to Group R, 3.1 occupancies housing a bedridden client. Approvals made by the local fire authority having jurisdiction and the written opinion by the State Fire Marshal shall be applicable only to the requesting facility and shall not be construed as establishing any precedent for any future request by that facility or any other facility.*

~~425.10~~435.10 Temporarily bedridden clients. *Clients who become temporarily bedridden as defined in Health and Safety Code Section 1569.72, as enforced by the Department of Social Services, may continue to be housed on any story in Group R-2.1, R-3.1 or R-4 occupancies classified as Residential Care Facilities for the Elderly (RCFE). Every Residential Care Facility for the Elderly (RCFE) admitting or retaining a bedridden resident shall, within 48 hours of the resident's admission or retention in the facility, notify the local fire authority with jurisdiction of the estimated length of time the resident will retain his or her bedridden status in the facility.*

SECTION ~~426~~436
GROUP I-4 [SFM]

~~426.1~~436.1 Group I-4 special provisions. *Rooms classified as Group I-4 shall not be located above or below the first story.*

Exceptions:
1. Basements or stories having floor levels located within 4 feet (1219 mm), measured vertically, from adjacent ground level at the level of exit discharge, provided the basement or story has exterior exit doors at that level.
2. In buildings equipped with an automatic sprinkler system throughout, rooms used for kindergarten, first- and second-grade children or for day-care purposes may be located on the second story, provided there are at least two exterior exit doors, or other egress systems complying with Section 1017 with two exits, for the exclusive use of such occupants. Egress systems for the exclusive use of such occupants shall be maintained until exit discharge at grade is attained.
3. Group I-4 child-care facilities may be located above the first story in buildings of Type I construction and in Types II-A and III-A construction, subject to the limitation of Section 503 when:
3.1. Group I-4 childcare facilities with children under the age of seven or containing more than 12 children per story shall not be located above the fourth floor; and
3.2. The entire story in which the Group I-4 child-care facility is located is equipped with an approved manual fire alarm and smoke-detection system. (See the Fire Code.) Actuation of an initiating device shall sound an audible alarm throughout the entire story. When a building fire alarm system is required by other provisions of this code or the Fire Code, the alarm system shall be connected to the building alarm system. An approved alarm signal shall sound at an approved location in the Group I-4 child-care facility to indicate a fire alarm or sprinkler flow condition in other portions of the building; and
3.3 Group I-4 child-care facilities, if more than 1,000 square feet (92.9 m2) in area, is divided into at least two compartments of approximately the same size by a smoke barrier with door openings protected by smoke- and draft-control assemblies having a fire-protection rating of not less than 20 minutes. Smoke barriers shall have a fire-resistive rating of not less than one hour. In addition to the requirements of Section 508.3.3, occupancy separations between Group I-4 child-care and other occupancies shall be constructed as smoke barriers. Door openings in the smoke barrier shall be tightfitting, with gaskets installed as required by Section 710, and shall be automatic closing by actuation of the automatic sprinklers, fire alarm or smoke-detection system.
3.4. Each compartment formed by the smoke barrier has not less than two exits or exit access doors, one of which is permitted to pass through the adjoining compartment; and
3.5 Where two or more exits or exit access are required at least one shall not share a common path of travel.
3.6. The building is equipped with an automatic sprinkler system throughout.

SECTION ~~427~~437
Reserved

SECTION ~~428~~438
Reserved

SECTION ~~429~~439
ROAD TUNNELS, BRIDGES, AND OTHER LIMITED ACCESS HIGHWAYS [SFM]

~~429.1~~439.1 General. *Road tunnels, bridges, and other limited access highways that are state owned shall comply with NFPA 502.*

SECTION ~~430~~440
HORSE RACING STABLES [SFM]

~~430.1~~440.1 *For automatic sprinkler and fire alarm system requirements applying to each building, barn or structure which is used by an association regulated by the California Horse Racing Board for the stabling of horses or human habitation, and the stable area grounds, including any additional location where any excess horses are stabled see Title 4, Division 4, Article 17, Section 1927.*

SECTION ~~431~~441
PET KENNELS [SFM]

~~431.1~~441.1 *These regulations shall apply to every building or fire area in which a pet dealer, as defined in Health and Safety Code Section 122125, maintains a kennel.*

~~431.2~~441.2 ***Automatic sprinkler system.*** *An approved automatic sprinkler system complying with California Fire Code Section 903 shall be installed.*

Exception: *Where a fire alarm system that is connected to a central reporting station that alerts the local fire department in case of fire.*

SECTION ~~432~~442
COMBUSTION ENGINES AND GAS TURBINES[SFM]

~~432.1~~442.1 ***General.*** *The installation of combustion engines and gas turbines shall be in accordance with NFPA-37 and this chapter.*

~~432.2~~442.2 ***Separation.***

~~432.2.1~~442.2.1 ***Construction.*** *Every room in which is installed a combustion engine or gas turbine shall be separated from the remainder of the building by not less than a one-hour fire barrier.*

~~432.2.2~~442.2.2 ***Exterior openings.*** *When doors, windows or louvered openings are located below openings in another story or less than 10 feet (3048 mm) from doors, windows or louvered openings of the same building, they shall be protected by a fire assembly having a 3/4-hour rating. Such fire assemblies shall be fixed, automatic or self-closing.*

~~432.2.2.1~~442.2.2.1 ***Interior openings.*** *In other than buildings housing Group I and R-2.1 occupancies, interior openings shall be allowed in buildings protected by an automatic fire sprinkler system throughout.*

~~432.2.3~~442.2.3 ***Location.*** *Combustion engines and gas turbines used for emergency power shall not be located in a room or area used for any other purpose other than equipment and controls related to the generation and distribution of emergency power.*

~~432.2.4~~442.2.4 ***Special hazards.*** *The handling and use of flammable or combustible liquids shall comply with the California Fire Code.*

SECTION ~~435~~445
RESERVED

SECTION ~~436~~446
WINERY CAVES [SFM]

~~436.1~~446.1 ***Scope.*** *The use of subterranean space for winery facilities in natural or manmade caves shall be in accordance with this section.*

~~436.2~~446.2 ***Definitions.***

~~436.3~~446.3 ***General.*** *For definitions of ASSEMBLY, FIRE APPLIANCE and NONCOMBUSTIBLE, see Chapter 2.*

~~436.4~~446.4 ***Limited application.*** *For the purpose of Section ~~436~~446, certain terms are defined as follows:*

TYPE 1 WINERY CAVES are natural or manmade caves used solely for storage and/or processing of wine at a winery facility. Type 1 winery caves are not accessible to the public.

TYPE 2 WINERY CAVES are natural or manmade caves used for the storage and/or processing of wine at a winery facility. Type 2 winery caves are accessible to the public on guided tours only.

TYPE 3 WINERY CAVES are natural or manmade caves used for the storage and/or processing of wine at a winery facility. Type 3 winery caves are accessible to the public on guided tours and contain assembly use areas.

***~~436.5~~446.5 Permits.** For permits to operate Type 2 and 3 winery caves, see Section 105.*

***~~436.6~~446.6 Fire apparatus access roads.** Fire apparatus access roads shall be constructed and maintained in accordance with the California Fire Code, Section 503.*

~~436.7~~446.7 Construction requirements.

***~~436.7.1~~446.7.1 Allowable area.** The area of winery caves shall not be limited if constructed entirely of noncombustible materials. Winery caves constructed with combustible materials shall be limited in area so that no point is more than 150 feet (45 720 mm) from an exit.*

***~~436.7.2~~446.7.2 Interior construction.** The walls and ceilings of winery caves shall not contain hidden or concealed spaces.*

~~436.8~~446.8 General requirements.

***~~436.8.1~~446.8.1 Public tours.** Tours for the public shall be continuously guided by staff knowledgeable in the location of exits and the use of emergency notification devices.*

***~~436.8.2~~446.8.2 Standby personnel.** Per the California Fire Code, Section 2404.20, when, in the opinion of the fire chief, it is essential for public safety, the owner, agent or lessee shall employ one or more qualified persons, as required and approved by the chief, to be on duty at such place. Such individuals shall be in uniform or otherwise easily identifiable. Standby personnel shall be subject to the fire chief's orders at all times when so employed and shall remain on duty during the times such places are open to the public or when such activity is being conducted. Before the start of any activity requiring standby personnel, such individuals shall: 1. Inspect the required fire appliances to ensure they are in the proper place and in good working order. 2. Inspect all exits to verify accessibility and proper operation. While on duty, such individuals shall not be required or permitted to perform any duties other than those specified by the fire chief.*

***~~436.8.3~~446.8.3 Open-flame devices.** The use of candles and other open-flame devices shall be in accordance with California Fire Code Section 308.1.7.*

***~~436.9~~446.9 Portable fire extinguishers and other fire appliances.** Portable fire extinguishers shall be located to be readily accessible. Its type, location and spacing throughout the facility shall be in accordance with the provisions of Title 19, Chapter 3 and California Fire Code Section 906.1. Other fire appliances shall be maintained at the site as required by the fire chief.*

***~~436.10~~446.10 Fire alarm systems.** An approved manual fire alarm system conforming with the provisions of the California Fire Code, Section 907.2.1 shall be provided in all Type 3 winery caves.*

~~436.11~~446.11 Exits.

***~~436.11.1~~446.11.1 Distribution.** Exits shall be located remotely from each other and arranged to minimize any possibility that more than one may be blocked off by any one fire or other emergency condition.*

***~~436.11.2~~446.11.2 Number.** Winery caves shall be provided with a minimum of two exits. Assembly areas of Type 3 winery caves shall be provided with exits as required by the California Building Code for Group A Occupancies.*

~~436.12~~446.12 Exit illumination.

~~436.12.1~~446.12.1 ***General.*** *Exits shall be illuminated to a minimum intensity of not less than 1 foot-candle (10.76 lx) at floor level whenever the winery cave is occupied. Fixtures providing exit illumination shall be supplied from a dedicated circuit or source of power used only for exit illumination.*

~~436.12.2~~446.12.2 ***Separate sources of power.*** *The power supply for exit illumination may be provided by the premises' wiring system. In the event of its failure, illumination shall be automatically provided from an emergency system in Types 2 and 3 winery caves. Emergency systems shall be supplied from storage batteries or an on-site generator set, and the system shall be installed in accordance with the requirements of the California Electrical Code.*

~~436.13~~446.13 ***Exit signs.*** *Exit signs shall be installed at required exits and where otherwise necessary to clearly indicate the exits from assembly areas in Type 3 winery caves.*

~~436.14~~446.14 ***Maximum occupant load.*** *Occupant load requirements in the assembly areas of Type 3 winery caves shall be in accordance with Section 1004.*

~~436.15~~446.15 ***Seating arrangements.*** *Seating arrangements in the assembly areas of Type 3 winery caves shall be in accordance with California Fire Code, Section 1028.9.*

SECTION ~~437~~447
RESERVED

SECTION ~~438~~448
RESERVED

SECTION ~~439~~449
PUBLIC LIBRARIES [SL AND SFM]

Public libraries funded from the California Library Construction and Renovation Act of 1988.

~~439.1~~449.1 ***Automatic sprinkler system.*** *Automatic sprinkler systems shall be installed in: 1. New facilities, including additions; 2. Existing facilities to which a project adds the lesser of 5,000 square feet (465 m2) or 10 percent of the size of the existing facility, if the existing facility does not already have an automatic sprinkler system.*

~~439.2~~449.2 ***System monitoring requirement.*** *All fire protection systems shall be monitored by a fire alarm supervising station in accordance with the NFPA 72.*

~~439.3~~449.3 ***Book return slots.*** *Any interior book return with a slot piercing the exterior wall shall have a separate sprinkler head and be enclosed in fire-rated construction.*

~~439.4~~449.4 ***Automatic sprinkler and extinguishing systems.*** *For public libraries constructed with funds awarded under the California Reading and Literacy Improvement and Public Library Construction and Renovation Bond Act of 2000:*
1. Fire sprinkler system requirement. *All libraries funded for new construction, including additions, shall have automatic fire sprinkler systems installed.*
2. Fire sprinkler system requirement for renovations of existing facilities. *If there is no automatic fire sprinkler system in the existing facility, grant recipients shall be required to install a fire sprinkler system throughout the existing facility.*
3. Fire sprinkler system types. *The grant recipient may choose, on approval by the local fire authority, from wet-pipe, dry-pipe or pre-action systems, utilizing listed standard, early suppression fast response (ESFR), or on/off type sprinkler heads.*
4. Book return rooms and slots. *Book return rooms with slots in exterior walls shall have an automatic sprinkler head and be of approved fire-resistive construction. Book return slots and book drops shall have an additional automatic sprinkler head when shielded from the room sprinkler head.*
5. System monitoring requirement. *All fire protection systems shall be monitored by a fire alarm supervising station in accordance with the National Fire Protection Association (NFPA) 72.*
6. Alternate fire-extinguishing systems for specialized areas. *When approved by the fire authority having jurisdiction, other types of approved automatic fire-extinguishing systems may be utilized as an alternate to sprinklers in the following areas: rare book rooms, central computer rooms and telecommunication rooms.*

7. Automatic sprinkler system plan requirement. *Fire sprinkler system drawings shall use the furniture plan as a background for coordination with furniture and book stack location and height.*

SECTION ~~440~~450
GROUP C [SFM]

~~440.1~~450.1 Group C Occupancies defined.

~~440.1.1~~450.1.1 Organized camps. *For the purposes of these regulations, Group C Occupancies shall mean "organized camps" as defined in Section 18897, Health and Safety Code.*

~~440.1.1.1~~450.1.1.1 Description. *An organized camp is a site with programs and facilities established for the primary purpose of providing an outdoor group living experience with social, spiritual, educational or recreational objectives, for five days or more during one or more seasons of the year. The term "organized camp" does not include a motel, tourist camp, trailer park, resort, hunting camp, auto court, labor camp, penal or correctional camp, child-care institution or home-finding agency nor does it include any charitable or recreational organization which complies with the rules and regulations for recreational trailer parks provided for by Section 18301 (b), Health and Safety Code.*

~~440.1.2~~450.1.2 Tents and tent structures. *For the purpose of this chapter, a tent or tent structure is defined as any shelter of which 25 percent or more of the walls or roof, or both, are constructed of, or covered or protected by, a canvas or any other fabric material.*

~~440.2~~450.2 Purpose and intent. *The provisions of this section are established to provide fire and life safety in organized camps, but at the same time preserve the basic concept of outdoor living. It is the intent of this section that organized camps shall be considered as a separate and distinct occupancy.*

~~440.3~~450.3 Basic building and structures.

~~440.3.1~~450.3.1 Building classification. *Every building or structure shall be classified into the occupancy group they most nearly resemble and be constructed in accordance with appropriate occupancy requirements specified in this part.*

Exceptions:
1. Tents, tent structures, and buildings and structures that do not exceed 25 feet (7620 mm) in any lateral dimension and where such building or structure is not more than one story.
2. For fire safety, buildings or structures on the premises of an organized camp which are used for sleeping purposes, regardless of their similarity to other occupancy groups, shall conform to the provisions of Sections ~~440.4~~450.4, ~~440.5~~450.5, ~~440.6~~450.6and ~~440.7~~450.7.
3. For fire safety, buildings and structures which are not used for sleeping purposes shall conform to the provisions of Section ~~440.7~~450.7,which shall supersede any similar provisions contained in this part.

~~440.3.2~~450.3.2 Occupant load. *The living shelter whether a building, structure, tent and tent structure, or cabin, shall provide a minimum of 30 square feet (2.8 m2) of superficial floor area per person for single-tier bed units, and 20 square feet (1.9 m2) of superficial floor area per person for two-tier bed units. More than two tiers per bed unit are prohibited. There shall be at least 3 feet (914 mm) of lateral distance between beds.*

Exception: *Intermittent short-term organized camps are not required to provide shelter facilities but, if provided, they shall comply with this section.*

~~440.4~~450.4 General.

~~440.4.1~~450.4.1 Buildings intended for sleeping. *Buildings and structures used or intended for sleeping purposes which do not exceed any one of the limitations set forth below shall conform to the provisions of Sections ~~440.5~~450.5and ~~440.7~~450.7.*

1. One story in height
2. Twenty-five feet (7620 mm) in any lateral dimension

Exception: *This provision shall not apply to buildings or structures conforming to construction provisions of this section in effect prior to January 1, 1985.*

3. Maximum housing of 12 persons

~~440.4.2~~450.4.2 Limitations. *Buildings and structures used or intended for sleeping purposes, including those so used in whole or in part by staff personnel, and which exceed any one of the limitations set forth in Section ~~440.4.1~~450.4.1, shall conform to the provisions of Sections ~~440.5~~450.5 and ~~440.7~~450.7.*

Exception: *Buildings or structures used exclusively for living and sleeping purposes by resident custodial or caretaker personnel only may be constructed in accordance with the provisions of these regulations for a Group R, 3 Occupancy.*

~~440.5~~450.5 Special buildings, tents and tent structures.

~~440.5.1~~450.5.1 Special buildings. *In addition to the provisions of Section ~~440.7~~450.7, special buildings conforming to the limitations specified in Section ~~440.4.1~~450.4.1 shall conform to the following:*

1. The flame-spread end-point rating of all interior finish materials shall not exceed 200.
2. Every room or area housing more than eight persons shall be provided with not less than two approved exits, each of which shall be direct to the exterior and shall not be less than 32 inches (813 mm) in clear width and 6 feet 8 inches (2032 mm) in height. Rooms or areas housing eight or less persons shall be provided with at least one such exit direct to the exterior.
3. Every exit door shall be openable from the inside without the use of any key, special knowledge or effort.
4. Exit doors need not be hung to swing in the direction of exit travel. Where exit doors are hung to swing in the direction of exit travel, a landing conforming to the provisions of Section 1008.1.5 shall be provided. 5. When the distance (measured vertically) between the ground level and the floor level exceeds 8 inches (203 mm), a stairway from each exit shall be provided. Steps shall have a rise of not more than 8 inches (203 mm) and a run of not less than 9 inches (229 mm). Such stairway shall be at least as wide as the door it serves.

Exception: *In lieu of a stairway, a ramp having a slope of not more than 1 foot (305 mm) of rise for each 8 feet (2438 mm) of run may be provided.*

6. When the floor level at any door opening of any building or structure is more than 30 inches (762 mm) above the adjacent ground level, handrails or guardrails shall be provided on the landing, balcony or porch, and on every stairway or ramp to ground level.
7. Buildings and structures or groups of buildings and structures shall be separated from each other by not less than 10 feet (3048 mm). This section shall not apply to existing buildings and structures of existing Group C Occupancies.

~~440.5.2~~450.5.2 Tents and tent structures. *In addition to the provisions of Section ~~440.7~~450.7, tents and tent structures, or groups thereof, shall conform to the provisions of Section ~~440.5~~450.5, except as follows:*

1. Regardless of any other provisions of this section, heating of tents and tent structures shall be prohibited unless written permission is obtained from the fire chief.
2. All canvas or other fabric material shall be treated and maintained in a flame-retardant condition.

Exceptions:
1. Tents in existence prior to January 1, 1979, provided the following conditions are met:
1.1. Tents shall not exceed 80 square feet (7.4 m2) in area.
1.2. No electrical devices, except flashlights, are installed or used in the tents.
1.3. Tents are not located closer than 30 feet (9144 mm) to any open fire.
1.4. Smoking is prohibited in the tents.
1.5. All other applicable provisions of this article are met.

2. Canvas or materials used exclusively to protect windows and similar openings in walls.
3. Canvas or materials used as a windbreak enclosure of not more than three sides and open to the sky.

Note: *It is not the intent of Section ~~440.5.2~~450.5.2 that strict adherence to the width and height requirements of exit openings be enforced for exits from tents.*

~~440.6~~450.6 **Building and structures for sleeping.** *Buildings and structures, or portions thereof, used or intended for sleeping purposes and which exceed the height, area or capacity limitations specified in Section ~~440.4.1~~450.4.1 shall conform to the provisions of this section.*

~~440.6.1~~450.6.1 **Area, height and type of construction.** *Buildings and structures, or portions thereof, shall not exceed the limits of area, height and type of construction specified in these regulations for a Group R-2.1 occupancy. Such buildings and structures shall not be of less than one-hour fire-resistive construction throughout.*

~~440.6.2~~450.6.2 **Location on property.** *The fire-resistive protection of exterior walls and openings, as determined by location on property, shall be in accordance with the provisions of these regulations for a Group R-2.1 occupancy.*

~~440.6.3~~450.6.3 **Exits.** *Stairs, exits and smoke-proof enclosures shall be provided in accordance with the provisions of Chapter 10.*

~~440.6.4~~450.6.4 **Enclosure of vertical openings.** *Exits shall be enclosed as specified in Chapter 10. Elevator shafts, vent shafts and other vertical openings shall be enclosed and enclosures shall be as set forth in Chapter 7.*

~~440.6.5~~450.6.5 **Fire-extinguishing systems.** *Automatic fire-extinguishing systems, standpipes, and basement pipe inlets shall be installed when and as specified in Chapter 9 for buildings, based on the occupancy they most nearly resemble.*

~~440.6.6~~450.6.6 **Automatic fire alarm system.** *See Section 907.*

~~440.7~~450.7 **Special requirements.** *The provisions of this section shall apply to the premises and to all buildings and structures of all organized camps.*

~~440.7.1~~450.7.1 **Electrical.** *The installation of all electrical wiring shall conform to the applicable provisions of the California Electrical Code.*

~~440.7.2~~450.7.2 **Heating equipment.** *Heating equipment, and the installation thereof, shall conform to the provisions of the California Mechanical Code.*

~~440.7.3~~450.7.3 **Motion picture booths.** *Motion picture machine booths shall conform to the requirements of Section 409.*

~~440.7.4~~450.7.4 **Interior finish.** *Interior finish shall conform to the requirements of Chapter 8, except as permitted in Section ~~440.5.1~~450.5.1, Item 1.*

~~440.7.5~~450.7.5 **Heater room openings.** *All exterior openings in rooms containing central heating equipment, low-pressure boilers or water-heating boilers used as part of the heating system, if located below openings in another story, or if less than 10 feet (3048 mm) from other doors or windows of the same building, shall be protected by a fire assembly having a three-fourths-hour fire-resistive rating. Such fire assemblies shall be fixed, automatic or self-closing.*

Exception: *The requirement for three-fourths-hour fire assembly protection of openings may be deleted if the entire room is protected by an automatic sprinkler system conforming to the provisions of Section 903.*

~~440.7.6~~450.7.6 **Heating rooms.** *Every room containing central- heating equipment, low-pressure boiler or water-heating boiler used as part of the heating system shall be separated from the rest of the building by a one-hour fire-resistive fire barrier with all openings protected as set forth in Section 707.6.*

Exceptions:
1. Boilers or central heating plants where the largest piece of fuel equipment does not exceed 400,000 Btu per hour (135 kW) input.
2. When any such opening is protected by a pair of fire doors, the inactive leaf shall be normally secured in the closed position and shall be openable only by use of a tool. An astragal shall be provided and the active leaf shall be self-closing.

~~440.7.7~~450.7.7 **Exits.** *For purposes of determining occupant load for exit requirements, see Section ~~440.3.2~~450.3.2.*

~~440.7.8~~450.7.8 **Liquefied petroleum gas.** *The construction and installation of all tanks, cylinders, equipment and systems used or intended for use in conjunction with any liquefied petroleum gas shall conform to the provisions of the California Mechanical Code and the California Fire Code.*

~~440.7.9~~450.7.9 **Air-conditioning and ventilation systems.** *Heating units used as an integral part of an air-conditioning and ventilation system shall be installed in accordance with Sections ~~440.7.2~~450.7.2, ~~440.7.3~~450.7.3 and ~~440.7.6~~450.7.6.*

~~440.8~~450.8 **Camp fire alarm.** *Every organized camp shall provide and maintain a device or devices suitable for sounding a fire alarm. Such device or devices may be of any type acceptable to the enforcing agency provided they are distinctive in tone from all other signaling devices or systems and shall be audible throughout the camp premises. When an automatic fire alarm system is provided, as required by Section ~~440.6.6~~450.6.6, all signaling devices required by this section shall be of the same type as that used in the automatic system.*

SECTION ~~441~~451
RESERVED

SECTION ~~442~~452
SCHOOL FACILITIES FOR KINDERGARTEN THROUGH 12th GRADE AND GROUP E DAY CARE.

~~442.1~~452.1 **General Provisions.** *School facilities for Kindergarten through 12th grade and Group E day care shall comply with the provisions of this section and other applicable provisions of this code including requirements for specific occupancies.*

~~442.1.1~~452.1.1 **Location on property.** *All buildings housing Group E occupancies shall front directly on a public street or an exit discharge not less than 20 feet (6096 mm) in width. The exit discharge to the public street shall be a minimum 20-foot-wide (6096 mm) right-of-way, unobstructed and maintained only as access to the public street. At least one required exit shall be located on the public street or on the exit discharge*

~~442.1.2~~452.1.2 **Separate means of egress systems required.** *Every room with an occupant load of 300 or more shall have one of its exits or exit-access doorways lead directly into a separate means of egress system that consists of not less than two paths of exit travel which are separated by a smoke barrier in accordance with Section 709 in such a manner to provide an atmospheric separation that precludes contamination of both paths of exit travel by the same fire. Not more than two required exits or exit-access doorways shall enter into the same means of egress system.*

~~442.1.3~~452.1.3 **Fences and gates.** *School grounds may be fenced and gates therein may be equipped with locks, provided that safe dispersal areas based on 3 square feet (0.28 m^2) per occupant are located between the school and the fence. Such required safe dispersal areas shall not be located less than 50 feet (15 240 mm) from school buildings.*

Every public and private school shall conform with Section 32020 of the Education Code which states:

The governing board of every public school district, and the governing authority of every private school, which maintains any building used for the instruction or housing of school pupils on land entirely enclosed (except for building walls) by fences of walls, shall, through cooperation with the local law enforcement and fire-protection agencies having jurisdiction of the area, make provision for the erection of gates in such fences or walls. The gates shall be of sufficient size to permit the entrance of the ambulances, police equipment and fire-fighting apparatus used by the law enforcement and fire-protection agencies. There shall be no less than one such access gate and there shall be as many such gates as needed to assure access to all major buildings and ground areas. If such gates are to be equipped with locks, the locking devices shall be designed to permit ready entrance by the use of the chain or bolt-cutting devices with which the local law enforcement and fire-protection agencies may be equipped.

~~442.1.4~~452.1.4 **Special provisions.** *Rooms used by kindergarten, first-, or second-grade pupils, and Group E day care, shall not be located above or below the first story.*

Exceptions:

1. Kindergarten, first-, or second-grade pupils, or day care may be located in basements or stories having floor levels located within 4 feet (1219 mm), measured vertically, from the adjacent ground level at the level of exit discharge, provided the basement or story has exterior exit doors at that level.
2. In buildings equipped with an automatic sprinkler system throughout, rooms used for kindergarten, first- and second-grade children or for day-care purposes may be located on the second story, provided there are at least two exterior exit doors, or other egress systems complying with Section 1018 with two exits, for the exclusive use of such occupants. Egress systems for the exclusive use of such occupants shall be maintained until exit discharge at grade is attained.
3. Group E day-care facilities may be located above the first story in buildings of Type I-A, Type I-B, Type II-A and III-A construction, subject to the limitation of Section 503 when:
3.1. Facilities with children under the age of seven or containing more than 12 children per story shall not be located above the fourth floor; and
3.2. The entire story in which the day-care facility is located is equipped with an approved manual fire alarm and smoke-detection system. Actuation of an initiating device shall sound an audible alarm throughout the entire story. When a building fire alarm system is required by other provisions of this code, the alarm system shall be interconnected and sound the day-care fire alarm system; and
3.3. The day-care facility, if more than 1,000 square feet (92.9 m2) in area, is divided into at least two compartments of approximately the same size by a smoke barrier in accordance with Section 709. In addition to the requirements of Section 508, occupancy separations between daycare and other occupancies shall be constructed as smoke barriers. Door openings in the smoke barrier shall be tight fitting, with gaskets installed as required by Section 716.5.3.1 and shall be automatic closing by actuation of the fire sprinklers, fire alarm or smoke detection system; and
3.4. Each compartment formed by the smoke barrier has not less than two exits or exit-access doors, one of which is permitted to pass through the adjoining compartment, and
3.5. At least one exit or exit-access door from the day-care facility shall be into a separate means of egress with not less than two paths of exit travel, which are separated in such a manner to provide an atmospheric separation.
3.6. The building is equipped with an automatic sprinkler system throughout.

***~~442.1.5~~452.1.5* Special hazards.** *School classrooms constructed after January 1, 1990, not equipped with automatic sprinkler systems, which have metal grilles or bars on all their windows and do not have at least two exit doors within 3 feet (914 mm) of each end of the classroom opening to the exterior of the building or to a common hallway used for evacuation purposes, shall have an inside release for the grilles or bars on at least one window farthest from the exit doors. The window or windows with the inside release shall be clearly marked as emergency exits.*

***~~442.1.6~~452.1.6* Class I, II or III-A flammable liquids.** *Class I, II or III-A flammable liquids shall not be placed, stored or used in Group E occupancies, except in approved quantities as necessary in laboratories and classrooms and for operation and maintenance as set forth in the California Fire Code.*

SECTION ~~443~~453
GROUP L [SFM]

***~~443.1~~453.1* Scope.** *The provisions of this section shall apply to buildings or structures, or portions thereof, containing one or more Group L laboratory suites as defined in Section ~~443.2~~453.2.*

***~~443.2~~453.2* Definitions.** *The following terms are defined in Chapter 2:*

LABORATORY SUITE.
LIQUID TIGHT FLOOR.

***~~443.3~~453.3* Laboratory suite requirements.**

~~443.3.1~~453.3.1 *The gross square footage of an individual laboratory suite shall not exceed 10,000 sq ft (929 m2).*

~~443.3.2~~453.3.2 *An individual laboratory suite shall not serve more than a single tenant.*

Exception: *A laboratory suite controlled by a single responsible party.*

***~~443.4~~453.4* Construction**

***~~443.4.1~~453.4.1* Separation of laboratory suites.**

~~443.4.1.1~~453.4.1.1 Laboratory suites shall be separated from other occupancies in accordance with Table 508.4.

~~443.4.1.2~~453.4.1.2 Laboratory suites shall be separated from other laboratory suites by a fire barrier having a fire-resistance rating of not less than 1-hour.

~~443.4.1.3~~453.4.1.3 Laboratory suites shall be separated from control areas by a minimum 2-hour fire-resistance rating in accordance with Sections 707 and 711.

***Exception:** Laboratory suites shall be separated from control areas by a minimum 1-hour fire-resistance rating on floor levels below the 4th story.*

~~443.4.1.4~~453.4.1.4 ***Horizontal separation.*** *The floor construction of the laboratory suite and the construction supporting the floor of the laboratory suite shall have a minimum 2-hour fire-resistance rating in accordance with Section 711.*

Exceptions:
1. The floor construction of the laboratory suite and the construction supporting the floor of the laboratory suite are allowed to be 1-hour fire-resistance rated in buildings of Type IIA, IIIA and VA construction.
2. When an individual laboratory suite occupies more than one story, the intermediate floors contained within the suite shall comply with the requirements of Table 601.

~~443.4.2~~453.4.2 ***Structural design occupancy category.***

~~443.4.2.1~~453.4.2.1 Buildings containing Group L occupancies with an occupant load greater than 500 for colleges or adult education facilities, or other buildings with an occupant load greater than 5,000 shall be classified as Occupancy Category III in accordance with Chapters 16 and 16A.

~~443.4.2.2~~453.4.2.2 Other buildings containing Group L occupancies shall be classified as Occupancy Category II in accordance with Chapters 16 and 16A.

~~443.4.3~~453.4.3 ***Fire barrier and fire-smoke barrier.***

~~443.4.3.1~~453.4.3.1 ***Fire barrier.*** *A fire barrier having a fire resistance rating of not less than 2-hours shall divide any story containing more than one laboratory suite above the 4th story.*

~~443.4.3.1.1~~453.4.3.1.1 Fire barriers shall be continuous from exterior wall to exterior wall,

~~443.4.3.1.2~~453.4.3.1.2 The fire barrier shall divide the floor so that the square footage on each side of the 2-hour fire barrier is not less than 30 percent of the total floor area, and

~~443.4.3.1.3~~453.4.3.1.3 The number of laboratory suites on each side of the 2-hour fire barrier shall not be less than 25 percent of the total number of laboratory suites on the floor.

~~443.4.3.2~~453.4.3.2 ***Fire-smoke barrier.*** *Any story containing a Group L occupancy above the 10th story shall be subdivided by a fire-smoke barrier constructed as a fire barrier having a fire resistance rating of not less than 2- hours and shall also comply with the smoke barrier requirements of Section 709.*

The 2-hour fire- smoke barrier shall be in accordance with Sections ~~443.4.3~~453.4.3 through ~~443.4.3.2.3~~453.4.3.2.3.

~~443.4.3.2.1~~453.4.3.2.1 A minimum of one door opening shall be provided in the 2-hour fire-smoke barrier for emergency access.

~~443.4.3.2.2~~453.4.3.2.2 Each side of the 2-hour fire- smoke barrier shall be designed as a separate smoke zone designed in accordance with Section 909.6.

~~443.4.3.2.3~~453.4.3.2.3 The area on each side of the 2-hour firesmoke barrier shall be served by a minimum of one exit enclosure in accordance with Section 1022.

~~443.4.4~~453.4.4 **Emergency response equipment area.** *An area for emergency response equipment shall be provided on each floor in an approved location. The area shall be a minimum of 50 square feet (4.6 m2), accessed from outside the laboratory suite and identified with signage*

~~443.4.5~~453.4.5 **Liquid tight floor.** *All portions of the laboratory suite where hazardous materials may be present shall be provided with a liquid tight floor. Where the floor is designed to provide spill control or secondary containment the floor shall be designed in accordance with California Fire Code Section 5004.2.*

~~443.4.6~~453.4.6 **Emergency power.** *An emergency power system shall be provided in accordance with Chapter 27.*

~~443.4.6.1~~453.4.6.1 **Required systems.** *Emergency power shall be provided for all electrically operated equipment, systems and connected control circuits including:*

1. Mechanical ventilation systems. See section ~~443.4.7.2~~453.4.7.2. Emergency alarm and monitoring systems.
3. Temperature control systems required to prevent unsafe process excursions or chemical reactions.
4. Treatment systems and scrubbers.
5. Egress lighting.
6. Electrically operated systems required elsewhere in this code and the California Fire Code.

~~443.4.7~~453.4.7 **Ventilation.**

~~443.4.7.1~~453.4.7.1 **Compatibility.** *Incompatible materials shall not be conveyed in the same duct system. Combined products in mechanical exhaust ducts shall not create a physical hazard or reaction that could degrade the duct material. The building official may require a technical report in accordance with Section ~~443.7.1~~453.7.1.*

~~443.4.7.2~~453.4.7.2 **Fire dampers, smoke dampers and combination fire/smoke dampers.** *Fire dampers, smoke dampers or fire/smoke dampers shall not be permitted in product conveying and other mechanical exhaust duct systems used to maintain a safe laboratory environment. When the exhaust duct penetrates the laboratory suite boundary the exhaust duct shall be located within a horizontal assembly having a fire resistance rating equal to the fire barrier.*

~~443.4.7.3~~453.4.7.3 **Duct materials.** *Product conveying and other mechanical exhaust duct systems used to maintain a safe laboratory environment shall be constructed in accordance with Chapters 5 and 6 of the California Mechanical Code.*

~~443.4.7.4~~453.4.7.4 **Laboratory suite exhaust air.**

~~443.4.7.4.1~~453.4.7.4.1 *Exhaust air from laboratory suites shall not be recirculated.*

~~443.4.7.4.2~~453.4.7.4.2 *Laboratory suite exhaust air shall be independently ducted to a point outside the building or a roof top structure.*

Exceptions:
1. Exhaust ducts serving a single laboratory suite.
2. Exhaust ducts serving separate laboratory suites on the same story may be connected to a common duct within a fire rated vertical shaft when the sub-duct extends vertically upward at least 22 inches.
3. Exhaust ducts serving separate laboratory suites on the basement through the 4th story may be connected to a common duct within a fire rated vertical shaft when the sub-duct extends vertically upward at least 22 inches.
4. Exhaust ducts serving separate laboratory suites on the 5th story and above may be connected to a common duct that does not exceed 100 vertical feet within a fire rated vertical shaft when the subducts extends vertically upward at least 22 inches. Ducts serving the 5th story and above shall be separate from the duct serving the 4th story and below, but may be within the same fire rated shaft.

~~443.4.7.4.3~~453.4.7.4.3 *Laboratory suite exhaust ducts shall not penetrate the 2-hour fire barrier required by Section ~~443.4.3~~453.4.3.* **Exception:** *Where the exhaust duct is enclosed in a 2-hour shaft in accordance with Section 708.*

~~443.4.7.5~~453.4.7.5 **Ventilation rates.** *Mechanical exhaust ventilation systems shall provide a minimum ventilation rate not less than 1 cubic feet per minute per square foot [0.00508 m3/(s·m2)] of floor area, or 6 air exchanges per hour, whichever is greater. Systems shall operate continuously at the designed ventilation rate.*

~~443.4.7.6~~453.4.7.6 **Mechanical ventilation systems on emergency power.** *When operating on emergency power, the ventilation rate may be reduced to a level sufficient to maintain a differential pressure negative to the surrounding area.*

~~443.4.7.7~~453.4.7.7 **Mechanical ventilation system balancing.** *Mechanical ventilation systems shall be designed and balanced such that during normal and emergency conditions the door opening forces comply with the requirements of Sections 1008.1.3 and Chapter 11B as applicable. Emergency conditions shall include: supply fan shutdown or failure, closing of smoke dampers or combination fire/smoke dampers, or emergency power.*

~~443.5~~453.5. **Fire protection systems. See Chapter 9.**

~~443.6~~453.6 **Means of egress.**

~~443.6.1~~453.6.1 **Access to exits.** *Every portion of a laboratory suite containing hazardous materials and having a floor area of 500 square feet (19 m²) or more shall have access to not less than two separate exits or exit-access doorways in accordance with Section 1015.2.*

~~443.6.2~~453.6.2 **Door swing.** *All exit and exit-access doors serving areas with hazardous materials shall swing in the direction of exit travel, regardless of the occupant load served.*

~~443.6.3~~453.6.3 **Panic hardware.** *Exit and exit access doors from areas with hazardous materials shall not be provided with a latch or lock unless it is panic hardware or fire exit hardware.*

~~443.6.4~~453.6.4 **Buildings more than four stories.** *A minimum of one exit shall be provided to serve the floor on each side of the 2-hour fire barrier and shall comply with the provisions of Chapter 10.*

~~443.6.5~~453.6.5 **Corridors.** *Corridors shall comply with Section 1018 and shall have opening protection in accordance with Tables 716.5 and 716.6.*

~~443.7~~453.7 **Hazardous materials.**

~~443.7.1~~453.7.1 **Technical report.** *The enforcing agency may require a technical opinion and report to identify and develop methods of protection from the hazards presented by the hazardous materials. A qualified person, firm or corporation, approved by the enforcing agency, shall prepare the opinion and report, and shall be provided without charge to the enforcing agency. The opinion and report may include, but is not limited to, the preparation of a hazardous material management plan (HMMP); chemical analysis; recommendations for methods of isolation, separation, containment or protection of hazardous materials or processes, including appropriate engineering controls to be applied; the extent of changes in the hazardous behavior to be anticipated under conditions of exposure to fire or from hazard control procedures; and the limitations or conditions of use necessary to achieve and maintain control of the hazardous materials or operations. The report shall be entered into the files of the code enforcement agencies. Proprietary and trade secret information shall be protected under the laws of the state or jurisdiction having authority.*

~~443.7.2~~453.7.2 **Multiple hazards.** *When a hazardous material has multiple hazards, all hazards shall be addressed and controlled in accordance with the provisions of this code.*

~~443.7.3~~453.7.3 **Percentage of maximum allowable quantities.** *The percentage of the maximum allowable quantity of hazardous materials per laboratory suite permitted for each story level within a building shall be in accordance with Table ~~443.7.3.1~~453.7.3.1.*

TABLE ~~443.7.3.1~~453.7.3.1
HAZARDOUS MATERIALS QUANTITY PER LABORATORY SUITE

STORY		PERCENTAGE OF MAXIMUM ALLOWABLE QUANTITY PER LABORATORY SUITE[a, b]	Number of Lab Suites per floor based on Construction Type				
			Type IA	Type IB	Type IIA, IIIA, IV	Type IIB, IIIB, VA	Type VB
Above grade plane	Above 20	0	NP	NP	NP	NP	NP
	15 to 20	25	4	NP	NP	NP	NP

	11 ,12, 13, 14	50	8	NP	NP	NP	NP
	7, 8, 9, 10	50	16	NP	NP	NP	NP
	6	75	20	20	NP	NP	NP
	4, 5	75	20	20	20	NP	NP
	3	100	UL	UL	UL	UL	NP
	1, 2	100	UL	UL	UL	UL	UL
Below grade plane	1	75[c]	10	10	10	10	10
	2	50[d]	5	5	5	5	5
	3 and below	0	NP	NP	NP	NP	NP

UL = Unlimited, NP= Not permitted

a. Percentages shall be of the maximum allowable quantity per laboratory suite shown in Tables 307.1(1) and 307.1(2). Allowable hazardous material increases for buildings equipped throughout with an automatic sprinkler system shall not be applicable to Group L occupancies.

b. When an individual laboratory suite occupies more than one story, the more restrictive percentage of the maximum allowable quantity per laboratory suite shall apply.

c. The total aggregate quantity of flammable liquids on the first story below grade shall be limited to the maximum total aggregate quantity for Group B occupancy control areas.

d. The total aggregate quantity of flammable liquids on the second story level below grade shall be limited to a maximum total aggregate quantity for Group B occupancy control areas.

~~443.7.4~~453.7.4 Handling and transportation. *The handling and transportation of hazardous materials shall be in accordance with Section 5003 of the California Fire Code.*

~~443.7.5~~453.7.5 Transportation of hazardous materials above the 10th story. *Transportation of hazardous materials above the 10th story shall be limited to 5 percent of the maximum allowable quantities of Tables 307.1 (1) and 307.1(2.) Quantities are permitted to be increased 100 percent in buildings with an approved automatic sprinkler system in accordance with Section 903.3.1.1. Materials where footnote g of Table 307.1(1) applies shall not be increased.*

~~443.8~~453.8 Elevators and elevator lobbies above the 10th story. *Any story containing a Group L occupancy above the 10th story shall be provided with elevators and elevator lobbies in accordance with Sections ~~443.8.1~~453.8.1 through ~~443.8.3~~453.8.3.*

~~443.8.1~~453.8.1 *An elevator that serves every story of the building shall be provided on each side of the 2-hour fire-smoke barrier.*

~~443.8.2~~453.8.2 *An elevator lobby shall be provided on each side of the 2-hour fire-smoke barrier at each floor in accordance with Section ~~413.14.1~~3006. ~~Exceptions to 413.14.1 shall not apply.~~*

~~443.8.3~~453.8.3 *The elevator and its associated elevator lobbies and elevator machine rooms shall be pressurized in accordance with Section 909.6.*

~~443.9~~453.9 Existing Group L (Formerly Group H-8) occupancies, additions, alterations, or repairs. *See ~~Section 3416~~California Fire Code Chapter 11 and California Existing Building Code.*

SECTION ~~444~~454
RESERVED

SECTION ~~445~~455
LARGE FAMILY DAY-CARE HOMES [SFM]

~~445.1~~455.1 Large family day-care homes.

~~445.2~~455.2 *For purposes of clarification, Health and Safety Code Section 1597.46 is repeated.*

(a) A city, county, or city and county shall not prohibit large family day care homes on lots zoned for single-family dwellings, but shall do one of the following:

(1) Classify these homes as a permitted use of residential property for zoning purposes.

(2) Grant a nondiscretionary permit to use a lot zoned for a single-family dwelling to any large family day-care home that complies with local ordinances prescribing reasonable standards, restrictions and requirements concerning spacing and concentration, traffic control, parking and noise control relating to such homes, and complies with subdivision (d) and any regulations adopted by the state fire marshal pursuant to that subdivision. Any noise standards shall be consistent with local noise ordinances implementing the noise element of the general plan and shall take into consideration the noise level generated by children. The permit issued pursuant to this paragraph shall be granted by the zoning administrator, if any, or if there is no zoning administrator by the person or persons designated by the planning agency to grant such permits, upon the certification without a hearing.
(3) Require any large family day-care home to apply for a permit to use a lot zoned for single-family dwellings. The zoning administrator, if any, or if there is no zoning administrator, the person or persons designated by the planning agency to handle the use permits shall review and decide the applications. The use permit shall be granted if the large family day care home complies with local ordinances, if any, prescribing reasonable standards, restrictions and requirements concerning spacing and concentration, traffic control, parking and noise control relating to such homes, and complies with subdivision (d) and any regulations adopted by the state fire marshal pursuant to that subdivision.

Any noise standards shall be consistent with local noise ordinances implementing the noise element of the general plan and shall take into consideration the noise levels generated by children.

The local government shall process any required permit as economically as possible, and fees charged for review shall not exceed the costs of the review and permit process. Not less than 10 days prior to the date on which the decision will be made on the application, the zoning administrator or person designated to handle such use permits shall give notice of the proposed use by mail or delivery to all owners shown on the last equalized assessment roll as owning real property within a 100-foot radius of the exterior boundaries of the proposed large family day care home. No hearing on the application for a permit issued pursuant to this paragraph shall be held before a decision is made unless a hearing is requested by the applicant or other affected person. The applicant or other affected person may appeal the decision. The appellant shall pay the cost, if any of the appeal.

(b) A large family day-care home shall not be subject to the provisions of Division 13 (commencing with Section 21000) of the Public Resources Code.

(c) Use of a single-family dwelling for the purposes of a large family day-care home shall not constitute a change of occupancy for purposes of Part 1.5 (commencing with Section 17910) of Division 13 (State Housing Law), or for purposes of local building and fire codes.
(d) Large family day-care homes shall be considered as single- family residences for the purposes of the State Uniform Building Standards Code and local building and fire codes, except with respect to any additional standards specifically designed to promote the fire and life safety of the children in these homes adopted by the State Fire Marshal pursuant to this subdivision.

~~445.3~~455.3 Smoke alarms. *Large family day-care homes shall be equipped with State Fire Marshal approved and listed single station residential type smoke alarms. The number and placement of smoke alarms shall be determined by the enforcement authority.*

~~445.4~~455.4 Fire extinguishers. *Large and small family day-care homes shall be equipped with a portable fire extinguisher having a minimum 2A10BC rating.*

~~445.5~~455.5 Fire alarm devices. *See Section 907.2.6.4.*

~~445.6~~455.6 Compliance. *Every large-family day-care home shall comply with the provisions for Group R-3 occupancies and, if appropriate, Section ~~426.1~~436.1. For the purposes of Section ~~426.1~~436.1, the first story shall be designated as the floor used for residential occupancy nearest to the street level which provides primary access to the building.*

Enforcement of the provisions shall be in accordance with the Health and Safety Code Sections 13145 and 13146. No city, county, city and county, or district shall adopt or enforce any building ordinance or local rule or regulation relating to the subject of fire and life safety in large-family day-care homes which is inconsistent with those standards

adopted by the State Fire Marshal, except to the extent the building ordinance or local rule or regulation applies to single-family residences in which day care is not provided.

***~~445.7~~455.7* Special hazards.** *Every unenclosed gas-fired water heater or furnace which is within the area used for child care in a large family day-care home shall be protected in such a way as to prevent children from making contact with those appliances.*

***Exception:** This does not apply to kitchen stoves or ovens.*

***~~445.8~~455.8* Exiting.** *See Section 1015.7.*

CHAPTER 5
GENERAL BUILDING HEIGHTS AND AREAS

503.1 General. Unless otherwise specifically modified in Chapter 4 and this chapter, building height, number of stories and building area shall not exceed the limits specified in Sections 504 and 506 based on the type of construction as determined by Section 602 and the occupancies as determined by Section 302 except as modified hereafter. Building height, number of stories and building area provisions shall be applied independently. Each portion of a building separated by one or more fire walls complying with Section 706 shall be considered to be a separate building.

Exceptions:

1. [HCD 1] Limited-density owner-built rural dwellings may be of any type of construction which will provide for a sound structural condition. Structural hazards which result in an unsound condition and which may constitute a substandard building are delineated by Section 17920.3 of the Health and Safety Code.

2. Other than structural requirements, solar photovoltaic panels supported by a structure with no use underneath shall not constitute additional story or additional floor area and may exceed the height limit when constructed on a roof top of a building provided the following conditions are met:

1.1. For all occupancies, the highest point of the structure/panel shall meet the lower of the two values below:
1. 3' above the allowable building height per this code.
2. 3' above the roof of the building immediately below.

2.1. For installations on flat roofs in other than Group R-3 and R-4 occupancies, the highest point of the structure/panel shall meet the lower of the two values below:
1. 10' above the allowable building height per this code.
2. 10' above the roof of the building immediately below.

3. Other than structural requirements, solar photovoltaic panels supported by a structure over parking stalls shall not constitute additional story or additional floor area and may exceed the height limit as specified in exception 2 (above) when the following conditions are met (see Figure 5-1):
1. The area within the perimeter of the photovoltaic array has maximum rectangular dimension of 40 feet by 150 feet.
2. The distance between solar photovoltaic array structures is a minimum of 10 feet clear.
3. The driveway aisle separating solar photovoltaic array structures has a minimum width of 25 feet clear.
4. Solar photovoltaic array structure is used only for parking purposes with no storage.
5. Completely open on all sides (other than necessary structural supports) with no interior partitions.

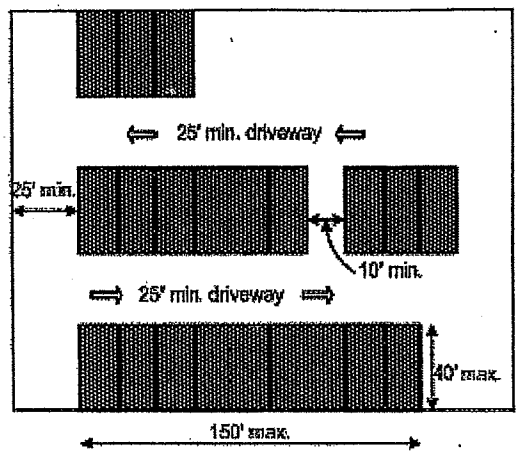

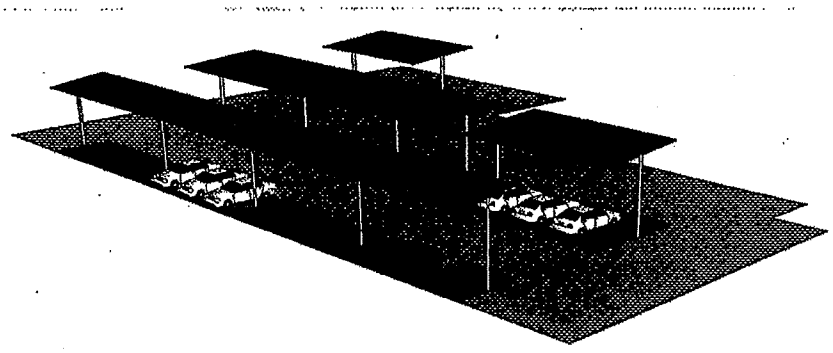

Figure 5-1

TABLE 504.3[a,i]
ALLOWABLE BUILDING HEIGHT IN FEET ABOVE GRADE PLANE

OCCUPANCY CLASSIFICATION	SEE FOOTNOTES	TYPE OF CONSTRUCTION								
		TYPE I		TYPE II		TYPE III		TYPE IV	TYPE V	
		A	B	A	B	A	B	HT	A	B
~~A,~~ B, ~~E,~~ F, S, U	NS[b]	UL	160	65	55	65	55	65	50	40
	S	UL	180	85	75	85	75	85	70	60
A, E	*NS[b]*	*UL*	*160*	*65*	*55*	*65*	*55*	*65*	*50*	*40*
	S (without area increase)	*UL*	*180*	*85*	*75*	*85*	*75*	*85*	*70*	*60*
	S (with area increase)	*UL*	*160*	*65*	*55*	*65*	*55*	*65*	*50*	*40*
~~H-1, H-2, H-3, H-5,~~ *L*	NS[c,d]	UL	160	65	55	65	55	65	50	40
	S									
~~H-4~~	NS[c,d]	UL	160	65	55	65	55	65	50	40
	S *(without area increase)*	UL	180	85	75	85	75	85	70	60
	S (with area increase)	*UL*	*160*	*65*	*55*	*65*	*55*	*65*	*50*	*40*
~~I-1 Condition 1,~~ I-3	NS[d,e]	UL	160	~~65~~*NP*	~~55~~*NP*	~~65~~*NP*	~~55~~*NP*	~~65~~*NP*	~~50~~*NP*	~~40~~*NP*
	S *(without area increase)*	UL	180	~~85~~*NP*	~~75~~*NP*	~~85~~*NP*	~~75~~*NP*	~~85~~*NP*	~~70~~*NP*	~~60~~*NP*
	S (with area increase)	UL	160	*NP*	*NP*	*NP*	*NP*	*NP*	*NP*	*NP*
~~I-1 Condition 2,~~ ~~I-2,~~ *I-2.1*	NS[d,f,e]	UL	160	65	55	65	55	65	50	40
	S *(without area increase)*	UL	180	85						
	S (with area increase)	*UL*	*160*	*65*						
~~I-4~~	NS[d,g]	UL	160	65	55	65	55	65	50	40
	S *(without area increase)*	UL	180	85	75	85	75	85	70	60
	S (with area increase)	*UL*	*160*	*65*	*55*	*65*	*55*	*65*	*50*	*40*
R-*1*[h]	NS[d,h]	UL	160	65	55	65	55	65	50	40
	S13R	60	60	60	~~60~~*55*	60	~~60~~*55*	60	~~60~~*50*	~~60~~*40*
	S *(without area increase)*	UL	180	85	75	85	75	85	70	60
	S (with area increase)	*UL*	*160*	*65*	*55*	*65*	*55*	*65*	*50*	*40*
R-2[h]	NS[d,h]	UL	160	65	55	65	55	65	50	40
	S13R	60	60	60	~~60~~*55*	60	~~60~~*55*	60	~~60~~*50*	~~60~~*40*
	S *(without area increase)*	UL	180	85	75	85	75	85	70	60
	S (with area increase)	*UL*	*160*	*65*	*55*	*65*	*55*	*65*	*60*[i]	*40*

R-3, R-3.1[h]	NS[d,h]	UL	160	65	55	65	55	65	50	40
	S13D	*60*	*60*	*60*	*60*	*60*	*60*	*60*	*50*	*40*
	S13R	60	60	60	60	60	60	60	60	60
	S	UL	180	85	75	85	75	85	70	60
R-2.1, R-4[h]	NS[d,h]	UL	160	65	55	65	55	65	50	40
	S13D	*60*	*60*	*60*	*55*	*60*	*55*	*60*	*50*	*40*
	S13R	60	60	60	~~60~~*55*	60	~~60~~*55*	60	~~60~~*50*	~~60~~*40*
	S	*UL*	*160*	*65*	*55*	*65*	*55*	*65*	*50*	*40*

For SI: 1 foot = 304.8 mm.
Note: UL = Unlimited; *NP = Not Permitted;* NS = Buildings not equipped throughout with an automatic sprinkler system; S = Buildings equipped throughout with an automatic sprinkler system installed in accordance with Section 903.3.1.1; S13R = Buildings equipped throughout with an automatic sprinkler system installed in accordance with Section 903.3.1.2; *S13D = Buildings equipped throughout with an automatic sprinkler system installed in accordance with Section 903.3.1.3*.
a. See Chapters 4 and 5 for specific exceptions to the allowable height in this chapter.
b. See Section 903.2 for the minimum thresholds for protection by an automatic sprinkler system for specific occupancies.
c. New Group H occupancies are required to be protected by an automatic sprinkler system in accordance with Section 903.2.5.
d. The NS value is only for use in evaluation of existing building height in accordance with the ~~International~~*California Existing Building Code*.
e. New Group ~~I-1 and~~ I-3 occupancies are required to be protected by an automatic sprinkler system in accordance with Section 903.2.6. ~~For new Group I-1 occupancies Condition 1, see Exception 1 of Section 903.2.6.~~
f. New and existing Group I-2 occupancies are required to be protected by an automatic sprinkler system in accordance with Section 903.2.6 and Section 1103.5 of the ~~International~~*California* Fire Code.
g. For new Group I-4 occupancies, see Exceptions 2 and 3 of Section 903.2.6.
h. New Group R occupancies are required to be protected by an automatic sprinkler system in accordance with Section 903.2.8.
i. In other than Group A, E, H, I, L, and R occupancies, high-rise buildings, and other applications listed in Section 1.11 regulated by the Office of the State Fire Marshal, the S increases for height and stories in tables 504.3 and 504.4 are permitted in addition to the S area increase in accordance with Table 506.2.
j. For Group R-2 buildings of Type VA construction equipped throughout with an approved automatic sprinkler system in accordance with Section 903.3.1.1, S area increase is permitted in addition to the height and story increase provided the height shall not exceed 60 feet and 4 stories.

TABLE 504.4[a, b, *n*]
ALLOWABLE NUMBER OF STORIES ABOVE GRADE PLANE

OCCUPANCY CLASSIFICATION	TYPE OF CONSTRUCTION									
	SEE FOOTNOTES	TYPE I		TYPE II		TYPE III		TYPE IV	TYPE V	
		A	B	A	B	A	B	HT	A	B
A-1	NS	UL	5	3	2	3	2	3	2	1
	S *(without area increase)*	UL	6	4	3	4	3	4	3	2
	S (with area increase)	*UL*	*5*	*3*	*2*	*3*	*2*	*3*	*2*	*1*
A-2	NS	UL	11	3	2	3	2	3	2	1
	S *(without area increase)*	UL	12	4	3	4	3	4	3	2
	S (with area increase)	*UL*	*11*	*3*	*2*	*3*	*2*	*3*	*2*	*1*
A-3	NS	UL	11	3	2	3	2	3	2	1
	S *(without area increase)*	UL	12	4	3	4	3	4	3	2
	S (with area increase)	*UL*	*11*	*3*	*2*	*3*	*2*	*3*	*2*	*1*
A-4	NS	UL	11	3	2	3	2	3	2	1
	S *(without area increase)*	UL	4	3	4	3	4	3	3	2
	S (with area increase)	*UL*	*11*	*3*	*2*	*3*	*2*	*3*	*2*	*1*

A-5	NS	UL	UL	UL	UL	UL	UL	UL	UL	UL
	S	UL	UL	UL	UL	UL	UL	UL	UL	UL
B	NS	UL	11	5	3	5	3	5	3	2
	S	UL	12	6	4	6	4	6	4	3
E	NS	UL	5	3	2	3	2	3	1	1
	S *(without area increase)*	UL	6	4	3	4	3	4	2	2
	S (with area increase)	*UL*	*5*	*3*	*2*	*3*	*2*	*3*	*1*	*1*
F-1	NS	UL	11	4	2	3	2	4	2	1
	S	UL	12	5	3	4	3	5	3	2
F-2	NS	UL	11	5	3	4	3	5	3	2
	S	UL	12	6	4	5	4	6	4	3
H-1	NS[c,d]	1	1	1	1	1	1	1	1	NP
	S									
H-2	NS[c,d]	~~UL~~*20*	3	2	1	2	1	2	1	1
	S									
H-3	NS[c,d]	~~UL~~*20*	6	4	2	4	2	4	2	1
	S									
H-4	NS[c,d]	~~UL~~*20*	7	5	3	5	3	5	3	2
	S *(without area increase)*	~~UL~~*20*	8	6	4	6	4	6	4	3
	S (with area increase)	~~UL~~*20*	*7*	*5*	*3*	*5*	*3*	*5*	*3*	*2*
H-5	NS[c,d]	4	4	3	3	3	3	3	3	2
	S									
~~I-1 Condition 1~~	~~NS[d,e]~~	~~UL~~	~~9~~	~~4~~	~~3~~	~~4~~	~~3~~	~~4~~	~~3~~	~~2~~
	~~S~~	~~UL~~	~~10~~	~~5~~	~~4~~	~~5~~	~~4~~	~~5~~	~~4~~	~~3~~
~~I-1 Condition 2~~	~~NS[d,e]~~	~~UL~~	~~9~~	~~4~~	~~3~~	~~4~~	~~3~~	~~4~~	~~3~~	~~2~~
	~~S~~	~~UL~~	~~10~~	~~5~~						
I-2/*I-2.1*[j]	NS[d,f]	UL	4	2						
	S *(without area increase)*	UL	5	3	1	1	NP	1	1	NP
	S (with area increase)	*UL*	*4*	*2*						
I-3	NS[d,e]	~~UL~~*NP*	~~4~~*NP*	~~2~~*NP*	~~1~~ *NP*	~~2~~ *NP*	~~1~~ *NP*	~~2~~ *NP*	~~2~~ *NP*	~~1~~ *NP*
	S *(without area increase)*	UL	~~5~~*3*	~~3~~ *NP*	~~2~~ *NP*	~~3~~ *NP*	~~2~~ *NP*	~~3~~ *NP*	~~3~~ *NP*	~~2~~ *NP*
	S (with area increase)	*UL*	*2*	*NP*	*NP*	*NP*	*NP*	*NP*	*NP*	*NP*
I-4	NS[d,g]	UL	5	3	2	3	2	3	1	1
	S *(without area increase)*	UL	6	4	3	4	3	4	2	2
	S (with area increase)	*UL*	*5*	*3*	*2*	*3*	*2*	*3*	*1*	*1*
L	*NS*	*NP*	*NP*	*NP*	*NP*	*NP*	*NP*	*NP*	*NP*	*NP*
	S	*20*	*6*	*5*	*3*	*5*	*3*	*5*	*3*	*2*
M	NS	UL	11	4	2	4	2	4	3	1
	S	UL	12	5	3	5	3	5	4	2
R-1[h]	NS[d,h]	UL	11	4	4	4	4	4	3	2
	S13R	4	4						~~4~~*3*	~~3~~*2*
	S *(without area increase)*	UL	12	5	5	5	5	5	4	3
	S (with area increase)	*UL*	*11*	*4*	*4*	*4*	*4*	*4*	*3*	*2*
R-2[h]	NS[d,h]	UL	11	4	4	4	4	4	3	2
	S13R	4	4	4					~~4~~*3*	~~3~~*2*
	S *(without area increase)*	UL	12	5	5	5	5	5	4	3
	S (with area increase)	*UL*	*11*	*4*	*4*	*4*	*4*	*4*	*4*[o]	*2*
R-2.1[h]	*NS*[d,h]	*UL*	*6*[l]	*3*[k]	*NP*	*3*[k]	*NP*	*NP*	*3*[k]	*NP*

	S13R	UL	4[l]	3[k]	NP	3[k]	NP	NP	3[k]	NP
	S	UL	6[l]	3[k]	NP	3[k]	NP	NP	3[k]	NP
R-3, R-3.1[h]	NS[d,h]	UL	11						3	3
	S13D	4	4	4	4	4	4	4	3	3
	S13R	4	4						4	4
	S	UL	12	5	5	5	5	5	4	4
R-4[h]	NS[d,h]	UL	11[l]							
	S13D	4	4[l]	4[k]	4[m]	4[k]	4[m]	4[m]	3[k]	2[m]
	S13R	4	4[l]							
	S	UL	11[l]							
S-1	NS	UL	11							
	S	UL	12	5	3	4	3	5	4	2
S-2[i]	NS	UL	11	5	3	4	3	4	4	2
	S	UL	12	6	4	5	4	5	5	3
U	NS	UL	5	4	2	3	2	4	2	1
	S	UL	6	5	3	4	3	5	3	2

Note: UL = Unlimited; NP = Not Permitted; NS = Buildings not equipped throughout with an automatic sprinkler system; S = Buildings equipped throughout with an automatic sprinkler system installed in accordance with Section 903.3.1.1; S13R = Buildings equipped throughout with an automatic sprinkler system installed in accordance with Section 903.3.1.2; *S13D = Buildings equipped throughout with an automatic sprinkler system installed in accordance with Section 903.3.1.3*.

a. See Chapters 4 and 5 for specific exceptions to the allowable height in this chapter.

b. See Section 903.2 for the minimum thresholds for protection by an automatic sprinkler system for specific occupancies.

c. New Group H occupancies are required to be protected by an automatic sprinkler system in accordance with Section 903.2.5.

d. The NS value is only for use in evaluation of existing building height in accordance with the ~~International~~*California* Existing Building Code.

e. New Group ~~I-1 and~~ I-3 occupancies are required to be protected by an automatic sprinkler system in accordance with Section 903.2.6. ~~For new Group I-1 occupancies, Condition 1, see Exception 1 of Section 903.2.6.~~

f. New and existing Group I-2 occupancies are required to be protected by an automatic sprinkler system in accordance with Section 903.2.6 and Section 1103.5 of the ~~International~~*California* Fire Code.

g. For new Group I-4 occupancies, see Exceptions 2 and 3 of Section 903.2.6.

h. New Group R occupancies are required to be protected by an automatic sprinkler system in accordance with Section 903.2.8.

i. See Section 408.1.2 for specific exceptions to construction type, allowable building areas and allowable heights.

j. Restraint shall not be permitted in any building except in Group I-3 occupancies constructed for such use (see Section 408.1.2).

k. Nonambulatory persons shall be limited to the first 2 stories.

l. Nonambulatory persons shall be limited to the first 5 stories.

m. Nonambulatory elderly clients are not permitted in buildings of these types of construction. See Section ~~425.3.3~~435.3.3 and ~~425.3.4~~435.3.4.

n. In other than Group A, E, H, I, L, and R occupancies, high-rise buildings, and other applications listed in Section 1.11 regulated by the Office of the State Fire Marshal, the S increases for height and stories in tables 504.3 and 504.4 are permitted in addition to the S area increase in accordance with Table 506.2.

o. For Group R-2 buildings of Type VA construction equipped throughout with an approved automatic sprinkler system in accordance with Section 903.3.1.1.S area increase is permitted in addition to the height and story increase provided the height shall not exceed 60 feet and 4 stories.

TABLE 506.2[a, b,*l*]
ALLOWABLE AREA FACTOR (At = NS, S1, S13R, or SM, as applicable) IN SQUARE FEET

OCCUPANCY CLASSIFICATION	TYPE OF CONSTRUCTION					
	SEE FOOTNOTES	TYPE I	TYPE II	TYPE III	TYPE IV	TYPE V

		A	B	A	B	A	B	HT	A	B
A-1	NS	UL	UL	15,500	8,500	14,000	8,500	15,000	11,500	5,500
	S1	UL	UL	62,000	34,000	56,000	34,000	60,000	46,000	22,000
	SM *(without height increase)*	UL	UL	46,500	25,500	42,000	25,500	45,000	34,500	16,500
	SM (with height increase)	*UL*	*UL*	*15,500*	*8,500*	*14,000*	*8,500*	*15,000*	*11,500*	*5,500*
A-2	NS	UL	UL	15,500	9,500	14,000	9,500	15,000	11,500	6,000
	S1	UL	UL	62,000	38,000	56,000	38,000	60,000	46,000	24,000
	SM *(without height increase)*	UL	UL	46,500	28,500	42,000	28,500	45,000	34,500	18,000
	SM (with height increase)	*UL*	*UL*	*15,500*	*9,500*	*14,000*	*9,500*	*15,000*	*11,500*	*6,000*
A-3	NS	UL	UL	15,500	9,500	14,000	9,500	15,000	11,500	6,000
	S1	UL	UL	62,000	38,000	56,000	38,000	60,000	46,000	24,000
	SM *(without height increase)*	UL	UL	46,500	28,500	42,000	28,500	45,000	34,500	18,000
	SM (with height increase)	*UL*	*UL*	*15,500*	*9,500*	*14,000*	*9,500*	*15,000*	*11,500*	*6,000*
A-4	NS	UL	UL	15,500	9,500	14,000	9,500	15,000	11,500	6,000
	S1	UL	UL	62,000	38,000	56,000	38,000	60,000	46,000	24,000
	SM *(without height increase)*	UL	UL	46,500	28,500	42,000	28,500	45,000	34,500	18,000
	SM (with height increase)	*UL*	*UL*	*15,500*	*9,500*	*14,000*	*9,500*	*15,000*	*11,500*	*6,000*
A-5	NS	UL	UL	UL	UL	UL	UL	UL	UL	UL
	S1									
	SM									
B	NS	UL	UL	37,500	23,000	28,500	19,000	36,000	18,000	9,000
	S1	UL	UL	150,000	92,000	114,000	76,000	144,000	72,000	36,000
	SM	UL	UL	112,500	69,000	85,500	57,000	108,000	54,000	27,000
E	NS	UL	UL	26,500	14,500	23,500	14,500	25,500	18,500	9,500
	S1	UL	UL	106,000	58,000	94,000	58,000	102,000	74,000	38,000
	SM *(without height increase)*	UL	UL	79,500	43,500	70,500	43,500	76,500	55,500	28,500
	SM (with height increase)	*UL*	*UL*	*26,500*	*14,500*	*23,500*	*14,500*	*25,500*	*18,500*	*9,500*
F-1	NS	UL	UL	25,000	15,500	19,000	12,000	33,500	14,000	8,500
	S1	UL	UL	100,000	62,000	76,000	48,000	134,000	56,000	34,000
	SM	UL	UL	75,000	46,500	57,000	36,000	100,500	42,000	25,500
F-2	NS	UL	UL	37,500	23,000	28,500	18,000	50,500	21,000	13,000
	S1	UL	UL	150,000	92,000	114,000	72,000	202,000	84,000	52,000
	SM	UL	UL	112,500	69,000	85,500	54,000	151,500	63,000	39,000
H-1	NS[c]	21,000	16,500	11,000	7,000	9,500	7,000	10,500	7,500	NP
	S1									
H-2	NS[c]	21,000	16,500	11,000	7,000	9,500	7,000	10,500	7,500	NP
	S1									
	SM									
H-3	NS[c]	UL	60,000	26,500	14,000	17,500	13,000	25,500	10,000	5,000
	S1									
	SM									
H-4	NS[c]	UL	UL	37,500	17,500	28,500	17,500	36,000	18,000	6,500
	S1	UL	UL	150,000	70,000	114,000	70,000	144,000	72,000	26,000
	SM *(without height increase)*	UL	UL	112,500	52,500	85,500	52,500	108,000	54,000	19,000
	SM (with height increase)	*UL*	*UL*	*37,500*	*17,500*	*28,500*	*17,500*	*36,000*	*18,000*	*6,500*
H-5	NS[c]	UL	UL	37,500	23,000	28,500	19,000	36,000	18,000	9,000
	S1	UL	UL	150,000	92,000	114,000	76,000	144,000	72,000	36,000

	SM *(without height increase)*	UL	UL	112,500	69,000	85,500	57,000	108,000	54,000	27,000
	SM (with height increase)	*UL*	*UL*	*37,500*	*23,000*	*28,500*	*19,000*	*36,000*	*18,000*	*9,000*
~~I-1~~	~~NS[d,e]~~	~~UL~~	~~55,000~~	~~19,000~~	~~10,000~~	~~16,500~~	~~10,000~~	~~18,000~~	~~10,500~~	~~4,500~~
	~~S1~~	~~UL~~	~~220,000~~	~~76,000~~	~~40,000~~	~~66,000~~	~~40,000~~	~~72,000~~	~~42,000~~	~~18,000~~
	~~SM~~	~~UL~~	~~165,000~~	~~57,000~~	~~30,000~~	~~49,500~~	~~30,000~~	~~54,000~~	~~31,500~~	~~13,500~~
I-2 */ I-2.1*	NS[d,f]	UL	UL	15,000	11,000	12,000	NP	12,000	9,500	NP
	S1	UL	UL	60,000	44,000	48,000	NP	48,000	38,000	NP
	SM *(without height increase)*	UL	UL	45,000	33,000	36,000	NP	36,000	28,500	NP
	SM (with height increase)	*UL*	*UL*	*15,000*	*11,000*	*12,000*	*NP*	*12,000*	*9,500*	*NP*
I-3	NS[d,e]	UL	~~UL~~ *15,100*	~~15,000~~ *NP*	~~10,000~~ *NP*	~~10,500~~ *NP*	~~7,500~~ *NP*	~~12,000~~ *NP*	~~7,500~~ *NP*	~~5,000~~ *NP*
	S1	UL	~~UL~~ *45,300*	~~45,000~~ *NP*	~~40,000~~ *NP*	~~42,000~~ *NP*	~~30,000~~ *NP*	~~48,000~~ *NP*	~~30,000~~ *NP*	~~20,000~~ *NP*
	SM *(without height increase)*	UL	~~UL~~ *30,200*	~~45,000~~ *NP*	~~30,000~~ *NP*	~~31,500~~ *NP*	~~22,500~~ *NP*	~~36,000~~ *NP*	~~22,500~~ *NP*	~~15,000~~ *NP*
	SM (with height increase)	*UL*	*15,100*	*NP*	*NP*	*NP*	*NP*	*NP*	*NP*	*NP*
I-4	NS[d,g]	UL	60,500	26,500	13,000	23,500	13,000	25,500	18,500	9,000
	S1	UL	121,000	106,000	52,000	94,000	52,000	102,000	74,000	36,000
	SM *(without height increase)*	UL	181,500	79,500	39,000	70,500	39,000	76,500	55,500	27,000
	SM (with height increase)	*UL*	*60,500*	*26,500*	*13,000*	*23,500*	*13,000*	*25,500*	*18,500*	*9,000*
L	*NS*	*UL*	*60,000*	*37,500*	*17,500*	*28,500*	*17,500*	*36,000*	*18,000*	*6,500*
	S1									
	SM									
M	NS	UL	UL	21,500	12,500	18,500	12,500	20,500	14,000	9,000
	S1	UL	UL	86,000	50,000	74,000	50,000	82,000	56,000	36,000
	SM	UL	UL	64,500	37,500	55,500	37,500	61,500	42,00	27,000
R-1[h]	NS[d,h]	UL	UL	24,000	16,000	24,000	16,000	20,500	12,00	7,000
	S13R									
	S1	UL	UL	96,000	64,000	96,000	64,000	82,000	48,000	28,000
	SM *(without height increase)*	UL	UL	72,000	48,000	72,000	48,000	61,500	36,000	21,000
	SM (with height increase)	*UL*	*UL*	*24,000*	*16,000*	*24,000*	*16,000*	*20,500*	*12,00*	*7,000*
R-2[h]	NS[d,h]	UL	UL	24,000	16,000	24,000	16,000	20,500	12,000	7,000
	S13R									
	S1	UL	UL	96,000	64,000	96,000	64,000	82,000	48,000	28,000
	SM *(without height increase)*	UL	UL	72,000	48,000	72,000	48,000	61,500	36,000	21,000
	SM (with height increase)	*UL*	*UL*	*24,000*	*16,000*	*24,000*	*16,000*	*20,500*	*12,000*	*7,000*
R-2 Type VA construction[h]	*NS[d]*	*NP*	*NP*	*NP*	*NP*	*NP*	*NP*	*NP*	12,000	*NP*
	S13R									
	S1	*NP*	*NP*	*NP*	*NP*	*NP*	*NP*	*NP*	48,000	*NP*
	SM (without height increase)	*NP*	*NP*	*NP*	*NP*	*NP*	*NP*	*NP*	36,000	*NP*
	SM (with height increase)	*NP*	*NP*	*NP*	*NP*	*NP*	*NP*	*NP*	*36,000[i]*	*NP*
R-2.1[h]	*NS[d]*	*UL*	*55,000*	*19,000*	*NP*	*16,500*	*NP*	*NP*	*16,500*	*NP*
	S13R									
	S1	*UL*	*220,000*	*76,000*	*40,000*	*66,000*	*40,000*	*72,000*	*42,000*	*18,000*
	SM (without height increase)	*UL*	*165,000*	*57,000*	*30,000*	*49,500*	*30,000*	*54,000*	*31,500*	*13,500*
	SM (with height increase)	*UL*	*55,000*	*19,000*	*NP*	*16,500*	*NP*	*NP*	*16,500*	*NP*
R-3 */ R-3.1[h]*	NS[d,h]	UL	UL	UL	UL	UL	UL	UL	UL	UL
	S13D									

	S13R									
	S1									
	SM									
R-4[h]	NS[d,h]	UL	UL	24,000	16,000	24,000	16,000	20,500	12,000	7,000
	S13R									
	S1	UL	UL	96,000	64,000	96,000	64,000	82,000	48,000	28,000
	SM *(without height increase)*	UL	UL	72,000	48,000	72,000	48,000	61,500	36,000	21,000
	SM (with height increase)	*UL*	*UL*	*24,000*	*16,000*	*24,000*	*16,000*	*20,500*	*12,000*	*7,000*
S-1	NS	UL	48,000	26,000	17,500	26,000	17,500	25,500	14,000	9,000
	S1	UL	192,000	104,000	70,000	104,000	70,000	102,000	56,000	36,000
	SM	UL	144,000	78,000	52,500	78,000	52,500	76,500	42,000	27,000
S-2	NS	UL	79,000	39,000	26,000	39,000	26,000	38,500	21,000	13,500
	S1	UL	316,000	156,000	104,000	156,000	104,000	154,000	84,000	54,000
	SM	UL	237,000	117,000	78,000	17,000	78,000	115,500	63,000	40,500
U	NS	UL	35,500	19,000	8,500	14,000	8,500	18,000	9,000	5,500
	S1	UL	142,000	76,000	34,000	56,000	34,000	72,000	36,000	22,000
	SM	UL	106,500	57,000	25,500	42,000	25,500	54,000	27,000	16,500

Note: UL = Unlimited; NP = Not permitted;
For SI: 1 square foot = 0.0929 m2.
NS = Buildings not equipped throughout with an automatic sprinkler system; S1 = Buildings a maximum of one story above grade plane equipped throughout with an automatic sprinkler system installed in accordance with Section 903.3.1.1; SM = Buildings two or more stories above grade plane equipped throughout with an automatic sprinkler system installed in accordance with Section 903.3.1.1; S13R = Buildings equipped throughout with an automatic sprinkler system installed in accordance with Section 903.3.1.2*; S13D = Buildings equipped throughout with an automatic sprinkler system installed in accordance with Section 903.3.1.3*.
a. See Chapters 4 and 5 for specific exceptions to the allowable height in this chapter.
b. See Section 903.2 for the minimum thresholds for protection by an automatic sprinkler system for specific occupancies.
c. New Group H occupancies are required to be protected by an automatic sprinkler system in accordance with Section 903.2.5.
d. The NS value is only for use in evaluation of existing building area in accordance with the ~~International~~*California* Existing Building Code.
e. New Group ~~I-1 and~~ I-3 occupancies are required to be protected by an automatic sprinkler system in accordance with Section 903.2.6. ~~For new Group I-1 occupancies, Condition 1, see Exception 1 of Section 903.2.6.~~
f. New and existing Group I-2 occupancies are required to be protected by an automatic sprinkler system in accordance with Section 903.2.6 and Section 1103.5 of the ~~International~~*California* Fire Code.
g. New Group I-4 occupancies see Exceptions 2 and 3 of Section 903.2.6.
h. New Group R occupancies are required to be protected by an automatic sprinkler system in accordance with Section 903.2.8.
i. In other than Group A, E, H, I, L, and R occupancies, high-rise buildings, and other applications listed in Section 1.11 regulated by the Office of the State Fire Marshal, the S increases for height and stories in tables 504.3 and 504.4 are permitted in addition to the S area increase in accordance with Table 506.2.
j. For Group R-2 buildings of Type VA construction equipped throughout with an approved automatic sprinkler system in accordance with Section 903.3.1.1,S area increase is permitted in addition to the height and story increase provided the height shall not exceed 60 feet and 4 stories.

[SFM amendments incorporated into Tables 504.3 and 504.4]
~~**504.2 Automatic sprinkler system increase.** Where a building is equipped throughout with an approved automatic sprinkler system in accordance with Section 903.3.1.1, the value specified in Table 503 for maximum building height is increased by 20 feet (6096 mm) and the maximum number of *stories* is increased by one. Increases are permitted in addition to the building *area* increase in accordance with Section 506.2. *In other than Group A, E, H, I, L, and R occupancies, high-rise buildings, and other applications listed in Section 1.11 regulated by the Office of the State Fire Marshal, these increases are permitted in addition to the area increase in accordance with Section 506.3.* For Group R-2 buildings *of Type VA construction* equipped throughout with an approved automatic sprinkler system in~~

~~accordance with Section *903.3.1.1*, the value specified in Table 503 for maximum *building height* is increased by 20 feet (6096 mm) and the maximum number of *stories* is increased by one, but shall not exceed 60 feet (18 288 mm) or four *stories*, respectively, *these increases are permitted in addition to the area increase in accordance with Section 506.3. For Group R-3 buildings equipped throughout with an approved automatic sprinkler system in accordance with Section 903.3.1.2, the value specified in Table 503 for maximum building height is increased by 20 feet (6096 mm) and the maximum number of stories is increased by one, but shall not exceed 60 feet (18 288 mm) or four stories, respectively.*~~

~~**Exceptions:** The use of an automatic sprinkler system to increase building heights shall not be permitted for the following conditions:~~
~~1. Buildings, or portions of buildings, classified as a Group I-2 occupancy of Type IIB, III, IV or V construction.~~
~~2. Buildings, or portions of buildings, classified as a Group H-1, H-2, H-3 or H-5 occupancy.~~
~~3. *Fire-resistance rating* substitution in accordance with Table 601, Note d.~~
~~*4. [SFM] Buildings, or portions of buildings, classified as a Group L occupancy.*~~
~~*5. [SFM] Buildings, or portions of buildings, classified as a Licensed Group R-2.1 or R-4 occupancy.*~~

[SFM amendments incorporated into Table 506.2]
~~**506.3 Automatic sprinkler system increase.** Where a building is equipped throughout with *an approved automatic sprinkler system in accordance with Section 903.3.1.1, the building area limit*ation in Table 503 is permitted to be increased by an additional 200 percent (*Is* = 2) for buildings with more than one *story above grade plane* and an additional 300 percent (*Is* = 3) for buildings with no more than one *story above grade plane. In other than Group A, E, H, I, L and R occupancies, high-rise buildings, and other applications listed in Section 1.11 regulated by the Office of the State Fire Marshal, these* increases are permitted in addition to the height and story increases in accordance with Section 504.2. *For Group R-2 buildings of Type VA construction equipped throughout with an approved automatic sprinkler system in accordance with Section 903.3.1.1, these increases are permitted in addition to the height and story increase in accordance with Section 504.2.*~~

~~**Exception:** The building area limitation increases shall not be permitted for the following conditions:~~

~~1. The automatic sprinkler system increase shall not apply to buildings with an occupancy in Group H-1.~~
~~2. The automatic sprinkler system increase shall not apply to the building area of an occupancy in Group H-2 or H-3. For buildings containing such occupancies, the allowable building area shall be determined in accordance with Section 508.4.2, with the sprinkler system increase applicable only to the portions of the building not classified as Group H-2 or H-3.~~
~~3. Fire-resistance rating substitution in accordance with Table 601, Note d.~~
~~*4. [SFM] The automatic sprinkler system increase shall not apply to buildings with an occupancy in Group L.*~~

[SFM amendments incorporated into Table 506.2]
~~**506.4.1 Area determination.** *In other than Group A, E, H, I, L and R occupancies, high-rise buildings, and other applications listed in Section 1.11 regulated by the Office of the State Fire Marshal, the* total allowable building area of a single occupancy building with more than one story above grade plane shall be determined by multiplying the allowable building area per story (Aa), as determined in Section 506.1, by the number of stories above grade plane as listed below:~~

~~1. For buildings with two stories above grade plane, multiply by 2;~~
~~2. For buildings with three or more stories above grade plane, multiply by 3; and~~
~~3. No story shall exceed the allowable building area per story (Aa), as determined in Section 506.1, for the occupancies on that story.~~

~~**Exceptions:**~~
~~Unlimited area buildings in accordance with Section 507.~~

~~*For Group A, E, H, I, L and R occupancies, high-rise buildings, and other applications listed in Section 1.11 regulated by the Office of the State Fire Marshal, the total allowable building area of a single occupancy building with more than one story above grade plane shall be determined by multiplying the allowable building area per story (Aa), as determined in Section 506.1, by the number of stories above grade plane as listed below:*~~

~~*1. For buildings with two or more stories above grade plane, multiply by 2;*~~

~~*2. No story shall exceed the allowable building area per story (Aa), as determined in Section 506.1, for the occupancies on that story.*~~

~~***Exception:** Unlimited area buildings in accordance with Section 507.*~~

[SFM amendments incorporated into Section 506.2.3 and 506.2.4]
~~**506.5.2 More than one story above grade plane.** For buildings with more than one story above grade plane and containing mixed occupancies, each story shall individually comply with the applicable requirements of Section 508.1.~~

~~*For other than Group A, E, H, I, L and R occupancies, high-rise buildings, and other applications listed in Section 1.11 regulated by the Office of the State Fire Marshal,* buildings with more than three stories above grade plane, the total building area shall be such that the aggregate sum of the ratios of the actual area of each story divided by the allowable area of such stories based on the applicable provisions of Section 508.1 shall not exceed 3.~~

~~*For Group A, E, H, I, L and R occupancies, high-rise buildings, and other applications listed in Section 1.11 regulated by the Office of the State Fire Marshal, buildings with more than two stories above grade plane, the total building area shall be such that the aggregate sum of the ratios of the actual area of each story divided by the allowable area of such stories based on the applicable provisions of Section 508.1 shall not exceed 2.*~~

[Relocated from 2013 CBC 506.5.2]
506.2.3 Single-occupancy, multistory buildings. The allowable area of a single-occupancy building with more than one story above grade plane shall be determined in accordance with Equation 5-2:

$Aa = [At + (NS \times If)] \times Sa$ **(Equation 5-2)**

where:

Aa = Allowable area (square feet).
At = Tabular allowable area factor (NS, S13R or SM value, as applicable) in accordance with Table 506.2.
NS = Tabular allowable area factor in accordance with Table 506.2 for a nonsprinklered building (regardless of whether the building is sprinklered).
If =Area factor increase due to frontage (percent) as calculated in accordance with Section 506.3.
Sa = *For other than Group A, E, H, I, L and R occupancies, high-rise buildings, and other applications listed in Section 1.11 regulated by the Office of the State Fire Marshal,* ~~A~~actual number of building stories above grade plane, not to exceed three. *For Group A, E, H, I, L and R occupancies, high-rise buildings, and other applications listed in Section 1.11 regulated by the Office of the State Fire Marshal,* actual number of building stories above grade plane, not to exceed two.

~~For buildings equipped throughout with an automatic sprinkler system installed in accordance with Section 903.3.1.2, use the actual number of building stories above grade plane, not to exceed four.~~

No individual story shall exceed the allowable area (*Aa*) as determined by Equation 5-2 using the value of *Sa* = 1.

[Relocated from 2013 CBC 506.5.2]
506.2.4 Mixed-occupancy, multistory buildings. Each story of a mixed-occupancy building with more than one story above grade plane shall individually comply with the applicable requirements of Section 508.1. For buildings with more than three stories above grade plane, the total building area shall be such that the aggregate sum of the ratios of the actual area of each story divided by the allowable area of such stories, determined in accordance with Equation 5-3 based on the applicable provisions of Section 508.1, shall not exceed three*, provided the aggregate sum of the ratios for portions of mixed occupancy, multistory buildings containing A, E, H, I, L and R occupancies, high-rise buildings, and other applications listed in Section 1.11 regulated by the Office of the State Fire Marshal, including any other associated non-separated occupancies, shall not exceed two.*

$Aa = [At + (NS \times If)]$ **(Equation 5-3)**

where:

Aa = Allowable area (square feet).
At =Tabular allowable area factor (NS, S13R or SM value, as applicable) in accordance with Table 506.2.

NS = Tabular allowable area factor in accordance with Table 506.2 for a nonsprinklered building (regardless of whether the building is sprinklered).
If =Area factor increase due to frontage (percent) as calculated in accordance with Section 506.3.

~~**Exception:** For buildings designed as separated occupancies under Section 508.4 and equipped throughout with an automatic sprinkler system installed in accordance with Section 903.3.1.2~~*~~903.3.1.1~~*~~, the total building area shall be such that the aggregate sum of the ratios of the actual area of each story divided by the allowable area of such stories determined in accordance with Equation 5-3 based on the applicable provisions of Section 508.1, shall not exceed four.~~

507.4 Sprinklered, one-story buildings. The area of a ~~Group A-4 building no more than one story above grade plane of other than Type V construction, or the area of a~~ Group B, F, M or S building no more than one story above grade plane of any construction type, shall not be limited where the building is provided with an automatic sprinkler system throughout in accordance with Section 903.3.1.1 and is surrounded and adjoined by public ways or yards not less than 60 feet (18 288 mm) in width.

Exceptions:
1. Buildings and structures of Type I and II construction for rack storage facilities that do not have access by the public shall not be limited in height, provided that such buildings conform to the requirements of Sections 507.3, 903.3.1.1 and Chapter 23 of the ~~*International*~~ *California Fire Code*.
~~2. The automatic sprinkler system shall not be required in areas occupied for indoor participant sports, such as tennis, skating, swimming and equestrian activities in occupancies in Group A-4, provided that:~~
~~2.1. Exit doors directly to the outside are provided for occupants of the participant sports areas; and~~
~~2.2. The building is equipped with a fire alarm system with manual fire alarm boxes installed in accordance with Section 907.~~

507.11 Group E buildings. The area of a Group E building no more than one story above grade plane, of Type II*A*, IIIA or IV construction, shall not be limited when all of the following criteria are met:

1. Each classroom shall have not less than two means of egress, with one of the means of egress being a direct exit to the outside of the building complying with Section 1020.
2. The building is equipped throughout with an automatic sprinkler system in accordance with Section 903.3.1.1.
3. The building is surrounded and adjoined by public ways or yards not less than 60 feet (18 288 mm) in width.

TABLE 509
INCIDENTAL USES

ROOM OR AREA	SEPARATION AND/OR PROTECTION
Furnace room where any piece of equipment is over 400,000 Btu per hour input	1 hour or provide automatic sprinkler system [a]
Rooms with boilers where the largest piece of equipment is over 15 psi and 10 horsepower	1 hour or provide automatic sprinkler system [a]
Refrigerant machinery rooms	1 hour or provide automatic sprinkler system [a]
Hydrogen fuel gas rooms, not classified as Group H	1 hour in Group B, F, M, S and U occupancies; 2 hours in Group A, E, I and R occupancies.
Incinerator rooms	2 hours and automatic sprinkler system
Paint shops, not classified as Group H, located in occupancies other than Group F	2 hours; or 1 hour and provide automatic fire-extinguishing system
In Group E occupancies, laboratories and vocational shops not classified as Group H	1 hour or provide automatic sprinkler system
In Group I-2 *and I-2.1* occupancies, laboratories not classified as Group H	1 hour and provide automatic sprinkler system [a]
[SFM] Rooms or areas with special hazards such as laboratories, vocational shops and other such areas not classified as Group H, located in Group E occupancies where hazardous materials in quantities not exceeding the maximum allowable quantity are used or stored.	*1 hour*

In ambulatory care facilities, laboratories not classified as Group H	1 hour and provide automatic sprinkler system
Laundry rooms over 100 square feet	1 hour or provide automatic sprinkler system [a]
In Group I-2, laundry rooms over 100 square feet	1 hour
Group I-3 cells and Group I-2 *and I-2.1* patient rooms equipped with padded surfaces	1 hour
In Group I-2, physical plant maintenance shops	1 hour
In ambulatory care facilities or Group I-2 *and I-2.1* occupancies, waste and linen collection rooms with containers that have an aggregate volume of 10 cubic feet or greater	1 hour [a]
In other than ambulatory care facilities and Group I-2 *and I-2.1* occupancies, waste and linen collection rooms over 100 square feet	1 hour or provide automatic sprinkler system
In ambulatory care facilities or Group I-2 occupancies, storage rooms greater than 100 square feet	1 hour
Stationary storage battery systems having a liquid electrolyte capacity of more than 50 gallons for flooded lead-acid, nickel cadmium or VRLA, or more than 1,000 pounds for lithium-ion and lithium metal polymer used for facility standby power, emergency power or uninterruptable power supplies	1 hour in Group B, F, M, S and U occupancies; 2 hours in Group A, E, I and R occupancies.[a]

For SI: 1 square foot = 0.0929 m2, 1 pound per square inch (psi) = 6.9 kPa, 1 British thermal unit (Btu) per hour = 0.293 watts, 1 horsepower = 746 watts, 1 gallon = 3.785 L.

a. *[SFM] Fire barrier protection and automatic sprinkler protection required throughout the fire area in I-2 and I-2.1 occupancies as indicated.*

~~509.10~~510.10 Group R. *Buildings housing protective social care homes or in occupancies housing inmates who are not restrained need not be of one-hour fire- resistive construction when not more than two stories in height. In no case shall individual floor areas exceed 3,000 square feet (279 m2). The fire-resistive protection of the exterior walls shall not be less than one hour where such walls are located within 5 feet (1524 mm) of the property line. Openings within such walls are not permitted. Openings in exterior nonrated walls need not be protected.*

CHAPTER 6
TYPES OF CONSTRUCTION

TABLE 601
FIRE-RESISTANCE RATING REQUIREMENTS FOR BUILDING ELEMENTS (hours)

	TYPE I		TYPE II		TYPE III		TYPE IV	TYPE V	
BUILDING ELEMENT	A	B	A	B	A	B	HT	A[d]	B
Primary structural frame[f] (see Section 202)	3[a]	2[a]	1	0	1	0	HT	1	0
Bearing walls Exterior[e, f] Interior	 3 3[a]	 2 2[a]	 1 1	 0 0	 2 1	 2 0	 2 1/HT	 1 1	 0 0
Nonbearing walls and partitions Exterior	See Table 602								
Nonbearing walls and partitions Interior[d]	0	0	0	0	0	0	See Section 602.4.6	0	0
Floor construction and secondary members (see Section 202)	2	2	1	0	1	0	HT	1	0
Roof construction and secondary members (see Section 202)	11/2[b]	1[b, c]	1[b, c]	0[c]	1[b, c]	0	HT	1[b, c]	0

For SI: 1 foot = 304.8 mm.

a. Roof supports: Fire-resistance ratings of primary structural frame and bearing walls are permitted to be reduced by 1 hour where supporting a roof only.
b.1. Except in Group *A, E,* F-1, H, *I, L,* M, *R-1, R-2, R-2.1* and S-1 *occupancies, high-rise buildings, and other applications listed in Section 1.11 regulated by the Office of the State Fire Marshal,* fire protection of structural members shall not be required, including protection of roof framing and decking where every part of the roof construction is 20 feet or more above any floor immediately below. Fire-retardant-treated wood members shall be allowed to be used for such unprotected members.
b.2 For Group A, E, I, L, R-1, R-2, and R-2.1 occupancies, high-rise buildings, and other applications listed in Section 1.11 regulated by the Office of the State Fire Marshal, fire protection of members other than the structural frame shall not be required, including protection of roof framing and decking where every part of the roof construction is 20 feet or more above any floor immediately below. Fire-retardant-treated wood members shall be allowed to be used for such unprotected members.
b.3. One-story portions of Group A and E assembly occupancies the roof-framing system of Type II A or Type III A construction may be of unprotected construction when such roof-framing system is open to the assembly area and does not contain concealed spaces.
c. In all occupancies, heavy timber shall be allowed where a 1-hour or less fire-resistance rating is required.
d. Not less than the fire-resistance rating required by other sections of this code.
e. Not less than the fire-resistance rating based on fire separation distance (see Table 602).
f. Not less than the fire-resistance rating as referenced in Section 704.10.

602.1 General. Buildings and structures erected or to be erected, altered or extended in height or area shall be classified in one of the five construction types defined in Sections 602.2 through 602.5. The building elements shall have a fire-resistance rating not less than that specified in Table 601 and exterior walls shall have a fire-resistance rating not less than that specified in Table 602. Where required to have a fire-resistance rating by Table 601, building elements shall comply with the applicable provisions of Section 703.2. The protection of openings, ducts and air transfer openings in building elements shall not be required unless required by other provisions of this code.

Exception: *Noncombustible structural members supporting solar photovoltaic panels are not required to meet the fire resistance rating for the following:*

1. Photovoltaic panel supported by a structure and having no use underneath. Signs may be provided, as determined by the enforcing agency prohibiting any use underneath including storage.
2. Solar photovoltaic (PV) panels supported by noncombustible framing that have sufficient uniformly distributed and unobstructed openings throughout the top of the array (horizontal plane) to allow heat and gases to escape, as determined by the enforcing agency.
3. Solar photovoltaic panels supported by a structure over parking stalls where the panels constitute the roof and all the following conditions are met (see Figure 5-1):

3.1. The area within the perimeter of the solar photovoltaic array has maximum rectangular dimension of 40 feet by 150 feet.
3.2. The distance between solar photovoltaic array structures is a minimum of 10 feet clear.
3.3. The driveway aisle separating solar photovoltaic array structures has a minimum width of 25 feet clear.
3.4. Solar photovoltaic array structure is used only for parking purposes with no storage.
3.5. Completely open on all sides (other than necessary structural supports) with no interior partitions.

TABLE 602
FIRE-RESISTANCE RATING REQUIREMENTS FOR EXTERIOR WALLS BASED ON FIRE SEPARATION DISTANCE[a,d,g]

FIRE SEPARATION DISTANCE = X (feet)	TYPE OF CONSTRUCTION	OCCUPANCY GROUP H[e], *L*	OCCUPANCY GROUP F-1, M, S-1[f]	OCCUPANCY GROUP A, B, E, F-2, I, R[i,h], S-2, U[i,h]
X < 5[b]	All	3	2	1
5 ≤ X < 10	IA Others	3 2	2 1	1 1
10 ≤ X < 30	IA, IB	2	1	1[c]

	IIB, VB Others	1 1	0 1	0 1[c]
X ≥ 30	All	0	0	0

For SI: 1 foot = 304.8 mm.
a. Load-bearing exterior walls shall also comply with the fire-resistance rating requirements of Table 601.
b. See Section 705.1.1 for party walls.
c. Open parking garages complying with Section 406 shall not be required to have a fire-resistance rating.
d. The fire-resistance rating of an exterior wall is determined based upon the fire separation distance of the exterior wall and the story in which the wall is located.
e. For special requirements for Group H occupancies, see Section 415.3.
f. For special requirements for Group S aircraft hangars, see Section 412.4.1.
g. Where Table 705.8 permits nonbearing exterior walls with unlimited area of unprotected openings, the required fire-resistance rating for the exterior walls is 0 hours.
~~i.~~*h. Group R-3 and Group U occupancies when used as accessory to Group R-3 occupancies, shall not be required to have a fire-resistance rating where the fire separation distance is 5 feet or more; or when equipped throughout with an automatic residential fire sprinkler system installed in accordance with Section 903.3 the fire-resistance rating shall not be required where the fire separation distance is 3 feet or more.*

603.1 Allowable materials. Combustible materials shall be permitted in buildings of Type I or II construction in the following applications and in accordance with Sections 603.1.1 through 603.1.3:

1. Fire-retardant-treated wood shall be permitted in:
1.1. Nonbearing partitions where the required fire-resistance rating is 2 hours or less.
1.2. Nonbearing exterior walls where fire-resistance rated construction is not required.
1.3. Roof construction, including girders, trusses, framing and decking.

Exception: In buildings of Type IA construction exceeding two stories above grade plane, fire-retardant-treated wood is not permitted in roof construction where the vertical distance from the upper floor to the roof is less than 20 feet (6096 mm).

2. Thermal and acoustical insulation, other than foam plastics, having a flame spread index of not more than 25.

Exceptions:
1. Insulation placed between two layers of noncombustible materials without an intervening airspace shall be allowed to have a flame spread index of not more than 100.
2. Insulation installed between a finished floor and solid decking without intervening airspace shall be allowed to have a flame spread index of not more than 200.
3. Foam plastics in accordance with Chapter 26.
4. Roof coverings that have an A, B or C classification.
5. Interior floor finish and floor covering materials installed in accordance with Section 804.
6. Millwork such as doors, door frames, window sashes and frames.
7. Interior wall and ceiling finishes installed in accordance with Sections 801 and 803.
8. Trim installed in accordance with Section 806.
9. Where not installed greater than 15 feet (4572 mm) above grade, show windows, nailing or furring strips and wooden bulkheads below show windows, including their frames, aprons and show cases.
10. Finish flooring installed in accordance with Section 805.
11. Partitions dividing portions of stores, offices or similar places occupied by one tenant only and that do not establish a corridor serving an occupant load of 30 or more shall be permitted to be constructed of fire-retardant-treated wood, 1-hour fire-resistance-rated construction or of wood panels or similar light construction up to 6 feet (1829 mm) in height.
12. Stages and platforms constructed in accordance with Sections 410.3 and 410.4, respectively.
13. Combustible exterior wall coverings, balconies and similar projections and bay or oriel windows in accordance with Chapter 14.
14. Blocking such as for handrails, millwork, cabinets and window and door frames.
15. Light-transmitting plastics as permitted by Chapter 26.
16. Mastics and caulking materials applied to provide flexible seals between components of exterior wall construction.
17. Exterior plastic veneer installed in accordance with Section 2605.2.
18. Nailing or furring strips as permitted by Section 803.11.

19. Heavy timber as permitted by Note c to Table 601 and Sections 602.4.7 and 1406.3.
20. Aggregates, component materials and admixtures as permitted by Section 703.2.2.
21. Sprayed fire-resistant materials and intumescent and mastic fire-resistant coatings, determined on the basis of fire-resistance tests in accordance with Section 703.2 and installed in accordance with Sections 1705.14 and 1705.15, respectively.
22. Materials used to protect penetrations in fire-resistance-rated assemblies in accordance with Section 714.
23. Materials used to protect joints in fire-resistance-rated assemblies in accordance with Section 715.
24. Materials allowed in the concealed spaces of buildings of Types I and II construction in accordance with Section 718.5.
25. Materials exposed within plenums complying with Section 602 of the ~~*International*~~*California Mechanical Code*.
26. Wall construction of freezers and coolers of less than 1,000 square feet (92.9 m2), in size, lined on both sides with noncombustible materials and the building is protected throughout with an automatic sprinkler system in accordance with Section 903.3.1.1.

603.1.1 Ducts. The use of nonmetallic ducts shall be permitted where installed in accordance with the limitations of the ~~*International*~~*California Mechanical Code*.

603.1.2 Piping. The use of combustible piping materials shall be permitted where installed in accordance with the limitations of the ~~*International*~~*California Mechanical Code* and the ~~*International*~~*California Plumbing Code*.

603.1.3 Electrical. The use of electrical wiring methods with combustible insulation, tubing, raceways and related components shall be permitted when installed in accordance with the limitations of ~~this code~~ *the California Electrical Code*.

CHAPTER 7
FIRE-RESISTANCE-RATED CONSTRUCTION

702.1 Definitions. The following terms are defined in Chapter 2.

ANNULAR SPACE.
BUILDING ELEMENT.
CEILING RADIATION DAMPER.
COMBINATION FIRE/SMOKE DAMPER.
CORRIDOR DAMPER.
DAMPER.
DRAFTSTOP
F RATING.
FIRE BARRIER.
FIRE DAMPER.
FIRE DOOR.
FIRE DOOR ASSEMBLY.
FIRE PARTITION.
FIRE PROTECTION RATING.
FIRE-RATED GLAZING.
FIRE RESISTANCE.
FIRE-RESISTANCE RATING.
FIRE-RESISTANT JOINT SYSTEM.
FIRE SEPARATION DISTANCE.
FIRE-SMOKE BARRIER.
FIRE WALL.
FIRE WINDOW ASSEMBLY.
FIREBLOCKING.
FLOOR FIRE DOOR ASSEMBLY.
HORIZONTAL ASSEMBLY.
JOINT.
L RATING.
MEMBRANE PENETRATION.
MEMBRANE-PENETRATION FIRESTOP.
MEMBRANE-PENETRATION FIRESTOP SYSTEM.

MINERAL FIBER.
MINERAL WOOL.
PENETRATION FIRESTOP.
SELF-CLOSING.
SHAFT.
SHAFT ENCLOSURE.
SMOKE BARRIER.
SMOKE COMPARTMENT.
SMOKE DAMPER.
SPLICE.
T RATING.
THROUGH PENETRATION.
THROUGH-PENETRATION FIRESTOP SYSTEM.

705.5 Fire-resistance ratings. *For other than Group A, E, H, I, L and R occupancies, high-rise buildings, and other applications listed in Section 1.11* regulated by the Office of the State Fire Marshal, exterior walls shall be fire-resistance rated in accordance with Tables 601 and 602 and this section. The required fire-resistance rating of exterior walls with a fire separation distance of greater than 10 feet (3048 mm) shall be rated for exposure to fire from the inside. The required fire-resistance rating of exterior walls with a fire separation distance of less than or equal to 10 feet (3048 mm) shall be rated for exposure to fire from both sides.

For Group A, E, H, I, L and R occupancies, high-rise buildings, and other applications listed in Section 1.11 regulated by the Office of the State Fire Marshal, exterior walls shall be fire-resistance rated in accordance with Tables 601 and 602 and this section. The required fire-resistance rating of exterior walls shall be rated for exposure to fire from both sides.

705.8.1 Allowable area of openings. The maximum area of unprotected and protected openings permitted in an exterior wall in any story of a building shall not exceed the percentages specified in Table 705.8.

Exceptions:
1. In other than Group H occupancies, unlimited unprotected openings are permitted in the first *story* above grade plane either:
1.1. Where the wall faces a street and has a fire separation distance of more than 15 feet (4572 mm); or
1.2. Where the wall faces an unoccupied space. The unoccupied space shall be on the same lot or dedicated for public use, shall be not less than 30 feet (9144 mm) in width and shall have access from a street by a posted fire lane in accordance with the ~~*International*~~*California Fire Code*.

2. Buildings whose exterior bearing walls, exterior nonbearing walls and exterior primary structural frame are not required to be fire-resistance rated shall be permitted to have unlimited unprotected openings.

705.8.5 Vertical separation of openings. Openings in exterior walls in adjacent stories shall be separated vertically to protect against fire spread on the exterior of the buildings where the openings are within 5 feet (1524 mm) of each other horizontally and the opening in the lower story is not a protected opening with a fire protection rating of not less than 3/4 hour. Such openings shall be separated vertically not less than 3 feet (914 mm) by spandrel girders, exterior walls or other similar assemblies that have a fire-resistance rating of not less than 1 hour, rated for exposure to fire from both sides, or by flame barriers that extend horizontally not less than 30 inches (762 mm) beyond the exterior wall. Flame barriers shall have a fire-resistance rating of not less than 1 hour. The unexposed surface temperature limitations specified in ASTM E 119 or UL 263 shall not apply to the flame barriers or vertical separation unless otherwise required by the provisions of this code.

Exceptions:
1. This section shall not apply to buildings that are three stories or less above grade plane.
2. This section shall not apply to buildings equipped throughout with an automatic sprinkler system in accordance with Section 903.3.1.1~~ or 903.3.1.2~~.
3. Open parking garages.

705.12 Exterior Graphics on Exterior Walls of High-Rise Buildings. *Where installed on the exterior walls of high-rise buildings, exterior graphics, both permanent and temporary, greater than 100 square feet in area or greater than*

10 feet in either dimension shall comply with the following conditions subject to the review and approval of the fire code official and building official:

1. The materials used for graphics installed at a height greater than 40 feet above the grade plane shall be noncombustible materials or shall have a flame spread index not greater than 25 when tested in accordance with ASTM E84 or UL 723.
2. The method of attachment and mounting of the graphics to the exterior wall shall be such that the graphics are securely attached.
3. The graphics shall not interfere with the active or passive ventilation required for the building and the required smoke control systems in the building.
4. The graphics shall not impair the functions of any fire or life safety systems in the building.

TABLE 706.4
FIRE WALL FIRE-RESISTANCE RATINGS

GROUP	FIRE RESISTANCE RATING (hours)
A, B, E, H-4, I, R-1, R-2, *R-2.1*, U, *L*	3[a]
F-1, H-3[b], H-5, M, S-1	3
H-1,H-2	4[b]
F-2, S-2, R-3, R-4	2

a. In Type II or V construction, walls shall be permitted to have a 2-hour fire-resistance rating.
b. For Group H-1, H-2 or H-3 buildings, also see Sections 415.7 and 415.8.

707.1 General. Fire barriers installed as required elsewhere in this code or the ~~*International*~~*California Fire Code* shall comply with this section.

TABLE 707.3.10
FIRE-RESISTANCE RATING REQUIREMENTS FOR FIRE BARRIER ASSEMBLIES OR HORIZONTAL ASSEMBLIES BETWEEN FIRE AREAS

OCCUPANCY GROUP	FIRE-RESISTANCE RATING (hours)
H-1, H-2	4
F-1, H-3, S-1	3
A, B, E, F-2, H-4, H-5, I, *L*, M, R, S-2	2
U	1

708.3 Fire-resistance rating. Fire partitions shall have a fire-resistance rating of not less than 1 hour.

Exceptions:
1. Corridor walls permitted to have a 1/2 hour fire-resistance rating by Table 1020.1.
2. Dwelling unit and sleeping unit separations in buildings of Type IIB, IIIB and VB construction shall have fire-resistance ratings of not less than 1/2 hour in buildings equipped throughout with an automatic sprinkler system in accordance with Section 903.3.1.1.
3. Walls separating enclosed tenant spaces in Group B high-rise buildings of Type I and II construction equipped throughout with an automatic sprinkler system in accordance with Section 903.3.1.1.

708.4 Continuity. Fire partitions shall extend from the top of the foundation or floor/ceiling assembly below to the underside of the floor or roof sheathing, slab or deck above or to the fire-resistance-rated floor/ceiling or roof/ceiling assembly above, and shall be securely attached thereto. In combustible construction where the fire partitions are not required to be continuous to the sheathing, deck or slab, the space between the ceiling and the sheathing, deck or slab above shall be fireblocked or draftstopped in accordance with Sections 718.2 and 718.3 at the partition line. The supporting construction shall be protected to afford the required fire-resistance rating of the wall supported, except for walls separating tenant spaces in covered and open mall buildings, walls separating dwelling units, walls separating sleeping units and corridor walls, in buildings of Type IIB, IIIB and VB construction.

Exceptions:
1. The wall need not be extended into the crawl space below where the floor above the crawl space has a minimum 1-hour fire-resistance rating.

2. Where the room-side fire-resistance-rated membrane of the corridor is carried through to the underside of the floor or roof sheathing, deck or slab of a fire-resistance- rated floor or roof above, the ceiling of the corridor shall be permitted to be protected by the use of ceiling materials as required for a 1-hour fire-resistance- rated floor or roof system.
3. Where the corridor ceiling is constructed as required for the corridor walls, the walls shall be permitted to terminate at the upper membrane of such ceiling assembly.
4. The fire partitions separating tenant spaces in a covered or open mall building, complying with Section 402.4.2.1, are not required to extend beyond the underside of a ceiling that is not part of a fire-resistance-rated assembly. A wall is not required in attic or ceiling spaces above tenant separation walls.
5. Attic fireblocking or draftstopping is not required at the partition line in Group R-2 buildings that do not exceed four stories above grade plane, provided the attic space is subdivided by draftstopping into areas not exceeding 3,000 square feet (279 m2) or above every two dwelling units, whichever is smaller.
6. Fireblocking or draftstopping is not required at the partition line in buildings equipped with an automatic sprinkler system installed throughout in accordance with Section 903.3.1.1 or 903.3.1.2, provided that automatic sprinklers are installed in *all* combustible floor/ceiling and roof/ceiling spaces.

709.5 Openings. Openings in a smoke barrier shall be protected in accordance with Section 716.

Exceptions:
1. In ~~Group I-1 Condition 2,~~ Group I-2, *I-2.1, R-2.1* and ambulatory care facilities, where a pair of opposite-swinging doors are installed across a corridor in accordance with Section 709.5.1, the doors shall not be required to be protected in accordance with Section 716. The doors shall be close fitting within operational tolerances, and shall not have a center mullion or undercuts in excess of 3/4 inch (19.1 mm), louvers or grilles. The doors shall have head and jamb stops, and astragals or rabbets at meeting edges. Where permitted by the door manufacturer's listing, positive-latching devices are not required.
2. In ~~Group I-1 Condition 2,~~ Group I-2, *R-2.1* and ambulatory care facilities, horizontal sliding doors installed in accordance with Section 1010.1.4.3 and protected in accordance with Section 716.

710.2 Materials. The walls shall be of materials permitted by the building type of construction. *In Group I-2 and I-2.1, smoke partitions shall have framing covered with noncombustible materials having an approved thermal barrier with an index of not less than 15 in accordance with FM 4880, UL 1040, NFPA 286 or UL 1715.*

710.8 Ducts and air transfer openings. The space around a duct penetrating a smoke partition shall be filled with an *approved* material to limit the free passage of smoke. Air transfer openings in smoke partitions shall be provided with a *smoke damper* complying with Section 717.3.2.2. *For Group A, E, H, I, L and R occupancies, high-rise buildings, and other applications listed in Section 1.11 regulated by the Office of the State Fire Marshal, duct openings in smoke partitions shall also be provided with a smoke damper complying with Section 717.3.2.2.*

Exceptions:
1. Where the installation of a smoke damper will interfere with the operation of a required smoke control system in accordance with Section 909, approved alternative protection shall be utilized.
2. [SFM] Smoke dampers are not required in corridor penetrations where the duct is constructed of steel not less than 0.019-inch (0.40 mm) in thickness and there are no openings serving the corridor.

712.1.3 Escalator openings. *In other than Groups I-2, I-2.1, and I-3,* ~~W~~where a building is equipped throughout with an automatic sprinkler system in accordance with Section 903.3.1.1, vertical openings for escalators shall be permitted where protected in accordance with Section 712.1.3.1 or 712.1.3.2.

712.1.9 Two-story openings. In other than Groups I-2, *I-2.1* and I-3, a vertical opening that is not used as one of the applications listed in this section shall be permitted if the opening complies with all of the items below:
1. Does not connect more than two stories.
2. Does not penetrate a horizontal assembly that separates fire areas or smoke barriers that separate smoke compartments.
3. Is not concealed within the construction of a wall or a floor/ceiling assembly.
4. Is not open to a corridor in Group I and R occupancies.
5. Is not open to a corridor on nonsprinklered floors.
6. Is separated from floor openings and air transfer openings serving other floors by construction conforming to required shaft enclosures.

713.13 Waste and linen chutes and incinerator rooms. Waste and linen chutes shall comply with the provisions of NFPA 82, Chapter 5 and shall meet the requirements of Sections 713.13.1 through 713.13.6. Incinerator rooms shall meet the provisions of Sections 713.13.4 through 713.13.5.

Exception: Chutes serving and contained within a single dwelling unit.

~~**713.14.1 Elevator lobby.** An enclosed elevator lobby shall be provided at each floor where an elevator shaft enclosure connects more than *two stories in Group A, E, H, I, L, R-1, R-2 and R-2.1 occupancies, high-rise buildings, and other applications listed in Section 1.11 regulated by the Office of the State Fire Marshal, and more than three stories for all other occupancies.* The lobby enclosure shall separate the elevator shaft enclosure doors from each floor by fire partitions. In addition to the requirements in Section 708 for fire partitions, doors protecting openings in the elevator lobby enclosure walls shall also comply with Section 716.4.3 as required for corridor walls and penetrations of the elevator lobby enclosure by ducts and air transfer openings shall be protected as required for corridors in accordance with Section 717.5.4.1. Elevator lobbies shall have at least one means of egress complying with Chapter 10 and other provisions within this code.~~

~~**Exceptions:**~~
~~1. Enclosed elevator lobbies are not required at the level(s) of exit discharge, provided the level(s) of exit discharge is equipped with an automatic sprinkler system in accordance with Section 903.3.1.1.~~
~~2. Elevators not required to be located in a shaft in accordance with Section 708.2 are not required to have enclosed elevator lobbies.~~
~~3. Enclosed elevator lobbies are not required where additional doors are provided at the hoistway opening in accordance with Section 3002.6. Such doors shall comply with the smoke and draft control door assembly requirements in Section 716.5.3.1 when tested in accordance with UL 1784 without an artificial bottom seal.~~
~~4. Enclosed elevator lobbies are not required where the building is protected by an automatic sprinkler system installed in accordance with Section 903.3.1.1 or 903.3.1.2. This exception shall not apply to the following:~~

~~*4.1. Group A occupancies;*~~
~~*4.2. Group E occupancies;*~~
~~*4.3. Group H occupancies;*~~
~~*4.4. Group I occupancies;*~~
~~*4.5. Group L occupancies;*~~
~~*4.6. Group R-1, R-2 and R-2.1 occupancies; and*~~
~~*4.7. High-rise buildings.*~~

~~5. Smoke partitions shall be permitted in lieu of fire partitions to separate the elevator lobby at each floor where the building is equipped throughout with an automatic sprinkler system installed in accordance with Section 903.3.1.1 or 903.3.1.2. In addition to the requirements in Section 711 for smoke partitions, doors protecting openings in the smoke partitions shall also comply with Sections 711.5.2, 711.5.3, and 715.4.8 and duct penetrations of the smoke partitions shall be protected as required for corridors in accordance with Section 716.5.4.1.~~
~~6. *[SFM] When approved, in other than Group I-2 occupancies* enclosed elevator lobbies are not required where the elevator hoistway is pressurized in accordance with Section 708.14.2.~~
~~7. Enclosed elevator lobbies are not required where the elevator serves only open parking garages in accordance with Section 406.3.~~
~~*8. [SFM] Enclosed elevator lobbies are not required where the hoistway door has a fire protection rating as required by Section 708.7 and the hoistway door opening is also protected by a listed and labeled smoke containment system complying with ICC-ES AC 77.*~~

~~*See Section 403.6 for additional requirements for highrise buildings.*~~

716.5.3 Door assemblies in corridors and smoke barriers. Fire door assemblies required to have a minimum fire protection rating of 20 minutes where located in corridor walls or smoke barrier walls having a fire-resistance rating in accordance with Table 716.5 shall be tested in accordance with NFPA 252 or UL 10C without the hose stream test.

Exceptions:
1. Viewports that require a hole not larger than 1 inch (25 mm) in diameter through the door, have not less than a 0.25-inch-thick (6.4 mm) glass disc and the holder is of metal that will not melt out where subject to temperatures of 1,700°F (927°C).
2. Corridor door assemblies in occupancies of Group I-2 shall be in accordance with Section 407.3.1.

3. Unprotected openings shall be permitted for corridors in multitheater complexes where each motion picture auditorium has not fewer than one-half of its required exit or exit access doorways opening directly to the exterior or into an exit passageway.
4. Horizontal sliding doors in smoke barriers that comply with Sections 408.6 and ~~408.8.4~~ *408.8.1* in occupancies in Group I-3
5. Cell or room doors, including cell or room doors with integral side-lites that are part of the door assembly in Group I-3 occupancies which open into a required exit corridor within a cell complex.

716.5.5 Doors in interior exit stairways and ramps and exit passageways. Fire door assemblies in interior exit stairways and ramps and exit passageways shall have a maximum transmitted temperature rise of not more than 450°F (250°C) above ambient at the end of 30 minutes of standard fire test exposure.

Exception: The maximum transmitted temperature rise is not required in buildings equipped throughout with an *automatic sprinkler system* installed in accordance with Section 903.3.1.1 ~~or 903.3.1.2~~.

716.5.7.1 Fire door labeling requirements. Fire doors shall be labeled showing the name of the manufacturer or other identification readily traceable back to the manufacturer, the name or trademark of the third party inspection agency, the fire protection rating and, where required for fire doors in interior exit stairways and ramps and exit passageways by Section 716.5.5, the maximum transmitted temperature end point. Smoke and draft control doors complying with UL 1784 shall be labeled as such and shall comply with Section 716.5.7.3. Labels shall be approved and permanently affixed. The label shall be applied at the factory or location where fabrication and assembly are performed.

Exception: *In Group I-3 doors which are required to be 45 minutes or higher shall be fire-rated assemblies or certified by the manufacturer as being equivalent to the required standard.*

716.5.9.3 Smoke-activated doors. Automatic-closing doors installed in the following locations shall be automatic-closing by the actuation of smoke detectors installed in accordance with Section 907.3 or by loss of power to the smoke detector or hold-open device. Doors that are automatic-closing by smoke detection shall not have more than a 10-second delay before the door starts to close after the smoke detector is actuated:
1. Doors installed across a corridor.
2. Doors installed in the enclosures of exit access stairways and ramps in accordance with Sections 1019 and 1023, respectively.
3. Doors that protect openings in exits or corridors required to be of fire-resistance-rated construction.
4. Doors that protect openings in walls that are capable of resisting the passage of smoke in accordance with Section 509.4.
5. Doors installed in smoke barriers in accordance with Section 709.5.
6. Doors installed in fire partitions in accordance with Section 708.6.
7. Doors installed in a fire wall in accordance with Section 706.8.
8. Doors installed in shaft enclosures in accordance with Section 713.7.
9. Doors installed in waste and linen chutes, discharge openings and access and discharge rooms in accordance with Section 713.13. Loading doors installed in waste and linen chutes shall meet the requirements of Sections 716.5.9 and 716.5.9.1.1.
10. Doors installed in the walls for compartmentation of underground buildings in accordance with Section 405.4.2.
11. Doors installed in the elevator lobby walls of underground buildings in accordance with Section 405.4.3.
12. Doors installed in smoke partitions in accordance with Section 710.5.2.3.
~~12~~ 13. [SFM] Doors installed in walls required to be fire rated in accordance with Section 509.4.
~~13~~ 14. [SFM] Doors installed in walls required to be fire rated in accordance with Section 508.4.

In Group I-2 and I-2.1 occupancies smoke activated doors installed in the above locations shall be automatic closing by actuation of the fire alarm system, or actuation of smoke detectors installed in accordance with Section ~~907.10~~ 907.3, or activation of the sprinkler system installed in accordance with Section 903.1.

TABLE 716.6
FIRE WINDOW ASSEMBLY FIRE PROTECTION RATINGS
[Table not shown for clarity]

[Editorial Note: Publisher to verify that rows line up across the columns. Currently, Mixed occupancy separations, Fire partitions, and Smoke barriers.do not line up properly across the columns. No changes in regulatory effect, solely editorial clarification.]

717.2.2 Hazardous exhaust ducts. *Fire dampers* for hazardous exhaust duct systems shall comply with the ~~*International*~~*California Mechanical Code.*

717.5.2 Fire barriers. *In other than Group A, E, H, I, L and R occupancies, high-rise buildings, and other applications listed in Section 1.11 regulated by the Office of the State Fire Marshal.* Ducts and air transfer openings of fire barriers shall be protected with approved fire dampers installed in accordance with their listing. Ducts and air transfer openings shall not penetrate enclosures for interior exit stairways and ramps and exit passageways except as permitted by Sections 1023.5 and 1024.6, respectively.

Exception: Fire dampers are not required at penetrations of fire barriers where any of the following apply:
1. Penetrations are tested in accordance with ASTM E 119 or UL 263 as part of the fire-resistance-rated assembly.
2. Ducts are used as part of an *approved* smoke control system in accordance with Section 909 and where the use of a *fire damper* would interfere with the operation of a smoke control system.
3. Such walls are penetrated by ducted HVAC systems, have a required fire-resistance rating of 1 hour or less, are in areas of other than Group H and are in buildings equipped throughout with an *automatic sprinkler system* in accordance with Section 903.3.1.1~~ or 903.3.1.2~~. For the purposes of this exception, a ducted HVAC system shall be a duct system for conveying supply, return or exhaust air as part of the structure's HVAC system. Such a duct system shall be constructed of sheet steel not less than No. 26 gage thickness and shall be continuous from the air-handling appliance or equipment to the air outlet and inlet terminals.

[SFM] For Group A, E, H, I, L and R occupancies, high-rise buildings, and other applications listed in Section 1.11 regulated by the Office of the State Fire Marshal, ducts and air transfer openings of fire barriers shall be protected with approved fire and smoke dampers installed in accordance with their listing. Ducts and air transfer openings shall not penetrate exit enclosures and exit passageways except as permitted by Sections 1022.4 and 1023.6, respectively.

Exceptions:
1. Fire dampers are not required at penetrations of fire barriers where penetrations are tested in accordance with ASTM E119 as part of the fire-resistance rated assembly.
2. Fire and smoke dampers are not required where ducts are used as part of an approved smoke control system in accordance with Section 909 and where the use of a fire or smoke damper would interfere with the operation of a smoke control system.

717.5.4 Fire partitions. *In other than Group A, E, I and R occupancies, high-rise buildings, and other applications listed in Section 1.11 regulated by the Office of the State Fire Marshal,* ducts and air transfer openings that penetrate *fire partitions* shall be protected with *listed fire dampers* installed in accordance with their listing.

Exceptions: In occupancies other than Group H *and L*, fire dampers are not required where any of the following apply:

1. Corridor walls in buildings equipped throughout with an automatic sprinkler system in accordance with Section 903.3.1.1 or 903.3.1.2 and the duct is protected as a through penetration in accordance with Section 714.
2. Tenant partitions in covered and open mall buildings where the walls are not required by provisions elsewhere in the code to extend to the underside of the floor or roof sheathing, slab or deck above.
3. The duct system is constructed of *approved* materials in accordance with the ~~*International*~~*California Mechanical Code* and the duct penetrating the wall complies with all of the following requirements:

3.1. The duct shall not exceed 100 square inches (0.06 m2).
3.2. The duct shall be constructed of steel not less than 0.0217 inch (0.55 mm) in thickness.
3.3. The duct shall not have openings that communicate the corridor with adjacent spaces or rooms.
3.4. The duct shall be installed above a ceiling.
3.5. The duct shall not terminate at a wall register in the fire-resistance-rated wall.
3.6. A minimum 12-inch-long (305 mm) by 0.060-inch-thick (1.52 mm) steel sleeve shall be centered in each duct opening. The sleeve shall be secured to both sides of the wall and all four sides of the sleeve with minimum 11/2-inch by 11/2-inch by 0.060-inch (38 mm by 38 mm by 1.52 mm) steel retaining angles. The retaining angles shall be secured to the sleeve and the wall with No. 10 (M5) screws. The annular space between the steel sleeve and the wall opening shall be filled with mineral wool batting on all sides.

4. Such walls are penetrated by ducted HVAC systems, have a required fire-resistance rating of 1 hour or less, and are in buildings equipped throughout with an automatic sprinkler system in accordance with Section 903.3.1.1 or 903.3.1.2. For the purposes of this exception, a ducted HVAC system shall be a duct system for conveying supply, return or exhaust air as part of the structure's HVAC system. Such a duct system shall be constructed of sheet steel not less than No. 26 gage thickness and shall be continuous from the air-handling appliance or equipment to the air outlet and inlet terminals.

For Group A, E, I and R occupancies, high-rise buildings, and other applications listed in Section 1.11 regulated by the Office of the State Fire Marshal, ducts and air transfer openings that penetrate fire partitions shall be protected with listed fire dampers installed in accordance with their listings.

Exceptions:
1. Fire dampers are not required in corridor penetrations where the duct is constructed of steel not less than 0.019 inch (0.48 mm) in thickness, protected as a through penetration in accordance with Section 713 and there are no openings serving the corridor.
2. Fire dampers are not required where the duct system is constructed of approved materials in accordance with the California Mechanical Code and the duct penetrating the wall complies with all of the following requirements:

2.1 For other than corridors in Group I-2 occupancies the duct shall not exceed 100 square inches (0.6 m2).
2.2 The duct shall be constructed of steel a minimum of 0.0217 inch (0.55 mm) in thickness.
2.3 The duct shall not have openings that communicate the corridor with adjacent spaces or rooms.
2.4 The duct shall be installed above a ceiling.
2.5 The duct shall not terminate at a wall register in the fire-resistance rated wall.
2.6 The duct shall be protected as a through penetration in accordance with Section 714 or shall comply with the all of the following:

1. A minimum 12-inch-long (305 mm) by 0.060-inch-thick (1.52 mm) steel sleeve shall be centered in each duct opening.
2. The sleeve shall be secured to both sides of the wall and for all four sides of the sleeve with minimum 11/2-inch by 11/2-inch by 0.060-inch (38 mm by 38 mm by 1.52 mm) steel retaining angles.

3. The retaining angles shall be secured to the sleeve and the wall with No. 10 (M5) screws.
4. The annular space between the steel sleeve and the wall opening shall be filled with mineral wool batting on all sides.

717.5.4.1 Corridors. *In other than Group A, E, H, I, L and R occupancies, high-rise buildings, and other applications listed in Section 1.11 regulated by the Office of the State Fire Marshal,* ~~D~~duct and air transfer openings that penetrate corridors shall be protected with dampers as follows:
1. A corridor damper shall be provided where corridor ceilings, constructed as required for the corridor walls as permitted in Section 708.4, Exception 3, are penetrated.
2. A ceiling radiation damper shall be provided where the ceiling membrane of a fire-resistance rated floor-ceiling or roof-ceiling assembly, constructed as permitted in Section 708.4, Exception 2, is penetrated.
3. A listed smoke damper designed to resist the passage of smoke shall be provided at each point a duct or air transfer opening penetrates a corridor enclosure required to have smoke and draft control doors in accordance with Section 716.5.3.

Exceptions:
1. Smoke dampers are not required where the building is equipped throughout with an approved smoke control system in accordance with Section 909, and smoke dampers are not necessary for the operation and control of the system.
2. Smoke dampers are not required in corridor penetrations where the duct is constructed of steel not less than 0.019 inch (0.48 mm) in thickness and there are no openings serving the corridor.

[SFM] For Group A, E, H, I, L and R occupancies, high-rise buildings, and other applications listed in Section 1.11 regulated by the Office of the State Fire Marshal, a listed smoke damper designed to resist the passage of smoke shall also be provided at each point a duct or air transfer opening penetrates a fire-resistance rated corridor enclosure required to have smoke and draft doors in accordance with Section ~~715.5.3~~ 716.5.3.

Exceptions:

1. Smoke dampers are not required where ducts are used as part of an approved mechanical smoke control system designed in accordance with Section 909 and where the smoke damper will interfere with the operation of the smoke control system.
2. Smoke damper are not required in corridor penetrations where the duct is constructed of steel not less than 0.019 inch (0.48 mm) in thickness and there are no openings serving the corridor.

717.6.1 Through penetrations. In occupancies other than Groups I-2, I-2.1 and I-3, a duct constructed of approved materials in accordance with the ~~*International*~~*California Mechanical Code* that penetrates a fire-resistance-rated floor/ceiling assembly that connects not more than two *stories* is permitted without shaft enclosure protection, provided a listed fire damper is installed at the floor line or the duct is protected in accordance with Section 714.4. For air transfer openings, see Section 712.1.9.

Exception: A duct is permitted to penetrate three floors or less without a fire damper at each floor, provided such duct meets all of the following requirements:

1. The duct shall be contained and located within the cavity of a wall and shall be constructed of steel having a minimum wall thickness of 0.0187 inches (0.4712 mm) (No. 26 gage).
2. The duct shall open into only one dwelling or sleeping unit and the duct system shall be continuous from the unit to the exterior of the building.
3. The duct shall not exceed 4-inch (102 mm) nominal diameter and the total area of such ducts shall not exceed 100 square inches (0.065 m2) in any 100 square feet (9.3 m2) of floor area.
4. The annular space around the duct is protected with materials that prevent the passage of flame and hot gases sufficient to ignite cotton waste where subjected to ASTM E 119 or UL 263 time-temperature conditions under a minimum positive pressure differential of 0.01 inch (2.49 Pa) of water at the location of the penetration for the time period equivalent to the fire-resistance rating of the construction penetrated.
5. Grille openings located in a ceiling of a fire-resistance-rated floor/ceiling or roof/ceiling assembly shall be protected with a listed ceiling radiation damper installed in accordance with Section 717.6.2.1.

717.6.2 Membrane penetrations. Ducts and air transfer openings constructed of approved materials in accordance with the ~~*International*~~*California Mechanical Code* that penetrate the ceiling membrane of a fire-resistance-rated floor/ceiling or roof/ceiling assembly shall be protected with one of the following:

1. A shaft enclosure in accordance with Section 713.
2. A listed ceiling radiation damper installed at the ceiling line where a duct penetrates the ceiling of a fire-resistance-rated floor/ceiling or roof/ceiling assembly.
3. In floor assemblies composed of noncombustible materials, a shaft shall not be required where the duct connects not more than three stories, the annular space around the penetrating duct is protected with an approved noncombustible material that resists the free passage of flame and the products of combustion and a fire damper is installed at each floor line.

717.6.3 Nonfire-resistance-rated floor assemblies. Duct systems constructed of approved materials in accordance with the ~~*International*~~*California Mechanical Code* that penetrate nonfire-resistance-rated floor assemblies shall be protected by any of the following methods:

1. A shaft enclosure in accordance with Section 713.
2. The duct connects not more than two stories, and the annular space around the penetrating duct is protected with an approved noncombustible material that resists the free passage of flame and the products of combustion.
3. The duct connects not more than three stories, and the annular space around the penetrating duct is protected with an approved noncombustible material that resists the free passage of flame and the products of combustion and a fire damper is installed at each floor line.

Exception: Fire dampers are not required in ducts within individual residential dwelling units.

718.3.3 Other groups. In other groups, draftstopping shall be installed so that horizontal floor areas do not exceed 1,000 square feet (93 m2).

Exceptions:

1. *In other than Group A, E, H, I, L and R-2.1 occupancies, high-rise buildings, and other applications listed in Section 1.11 regulated by the Office of the State Fire Marshal,* draftstopping is not required in buildings equipped throughout with an automatic sprinkler system in accordance with Section 903.3.1.1.
2. *In Group A, E, H, I and L occupancies, high-rise buildings, and other applications listed in Section 1.11 regulated by the Office of the State Fire Marshal, where an automatic sprinkler system in accordance with Section 903.3.1.1 is installed, the area between draft stops may be 3,000 square feet (279 m2)and the greatest horizontal dimension may be 100 feet (30 480 mm).*

718.4.3 Other groups. Draftstopping shall be installed in attics and concealed roof spaces, such that any horizontal area does not exceed 3,000 square feet (279 m2).

Exceptions:
1. In other than Group A, E, H, I and L and R-2.1 occupancies, high-rise buildings, and other applications listed in Section 1.11 regulated by the Office of the State Fire Marshal, draftstopping is not required in buildings equipped throughout with an automatic sprinkler system in accordance with Section 903.3.1.1.
2. In Group A, E, H, I, L and R-2.1 occupancies, high-rise buildings, and other applications listed in Section 1.11 regulated by the Office of the State Fire Marshal, where an automatic sprinkler system in accordance with Section 903.3.1.1 is installed, the area between draft stops may be 9,000 square feet (836 m2)and the greatest horizontal dimension may be 100 feet (30 480 mm).

718.5 Combustible materials in concealed spaces in Type I or II construction. Combustible materials shall not be permitted in concealed spaces of buildings of Type I or II construction.

Exceptions:
1. Combustible materials in accordance with Section 603.
2. Combustible materials exposed within plenums complying with Section 602 of the ~~*International*~~*California Mechanical Code.*
3. Class A interior finish materials classified in accordance with Section 803.
4. Combustible piping within partitions or shaft enclosures installed in accordance with the provisions of this code.
5. Combustible piping within concealed ceiling spaces installed in accordance with the ~~*International*~~*California Mechanical Code* and the ~~*International*~~*California Plumbing Code.*
6. Combustible insulation and covering on pipe and tubing, installed in concealed spaces other than plenums, complying with Section 720.7.

720.1 General. Insulating materials, including facings such as vapor retarders and vapor-permeable membranes, similar coverings and all layers of single and multilayer reflective foil insulations, shall comply with the requirements of this section. Where a flame spread index or a smoke-developed index is specified in this section, such index shall be determined in accordance with ASTM E 84 or UL 723. Any material that is subject to an increase in flame spread index or smoke-developed index beyond the limits herein established through the effects of age, moisture or other atmospheric conditions shall not be permitted.

Exceptions:
1. Fiberboard insulation shall comply with Chapter 23.
2. Foam plastic insulation shall comply with Chapter 26.
3. Duct and pipe insulation and duct and pipe coverings and linings in plenums shall comply with the ~~*International*~~*California Mechanical Code.*
4. All layers of single and multilayer reflective plastic core insulation shall comply with Section 2613.

720.7 Insulation and covering on pipe and tubing. Insulation and covering on pipe and tubing shall have a flame spread index of not more than 25 and a smoke-developed index of not more than 450.

Exception: Insulation and covering on pipe and tubing installed in plenums shall comply with the ~~*International*~~*California Mechanical Code.*

CHAPTER 7A [SFM]
MATERIALS AND CONSTRUCTION METHODS FOR EXTERIOR WILDFIRE EXPOSURE

SECTION 701A

SCOPE, PURPOSE AND APPLICATION

701A.1 Scope. *This chapter applies to building materials, systems and/or assemblies used in the exterior design and construction of new buildings located within a Wildland-Urban Interface Fire Area as defined in Section 702A.*

701A.2 Purpose. *The purpose of this chapter is to establish minimum standards for the protection of life and property by increasing the ability of a building located in any Fire Hazard Severity Zone within State Responsibility Areas or any Wildland-Urban Interface Fire Area to resist the intrusion of flames or burning embers projected by a vegetation fire and contributes to a systematic reduction in conflagration losses.*

701A.3 Application. *New buildings located in any Fire Hazard Severity Zone or any Wildland-Urban Interface Fire Area designated by the enforcing agency constructed after the application date shall comply with the provisions of this chapter.*

Exceptions:
1. Buildings of an accessory character classified as a Group U occupancy and not exceeding 120 square feet in floor area, when located at least 30 feet from an applicable building.
2. Buildings of an accessory character classified as Group U occupancy of any size located least 50 feet from an applicable building.
3. Buildings classified as a Group UAgricultural Building, as defined in Section 202 of this code (see also Appendix C – Group UAgricultural Buildings), when located at least 50 feet from an applicable building.
4. Additions to and remodels of buildings originally constructed prior to the applicable application date.

701A.3.1 ***Application date and where required.*** *New buildings for which an application for a building permit is submitted on or after July 1, 2008 located in any Fire Hazard Severity Zone or Wildland Interface Fire Area shall comply with all sections of this chapter, including all of the following areas:*

1. All unincorporated lands designated by the State Board of Forestry and Fire Protection as State Responsibility Area (SRA) including:
1.1. Moderate Fire Hazard Severity Zones
1.2. High Fire Hazard Severity Zones
1.3. Very-High Fire Hazard Severity Zones

2. Land designated as Very-High Fire Hazard Severity Zone by cities and other local agencies.
3. Land designated as Wildland Interface Fire Area by cities and other local agencies.

Exceptions:
1. New buildings located in any Fire Hazard Severity Zone within State Responsibility Areas, for which an application for a building permit is submitted on or after January 1, 2008, shall comply with all sections of this chapter.
2. New buildings located in any Fire Hazard Severity Zone within State Responsibility Areas or any Wildland Interface Fire Area designated by cities and other local agencies for which an application for a building permit is submitted on or after December 1, 2005 but prior to July 1, 2008, shall only comply with the following sections of this chapter:
2.1. Section 705A – Roofing
2.2. Section 706A – Attic Ventilation

701A.4 Inspection and certification. *Building permit applications and final completion approvals for buildings within the scope and application of this chapter shall comply with the following:*

1. Building permit issuance. The local building official shall, prior to construction, provide the owner or applicant a certification that the building as proposed to be built complies with all applicable state and local building standards, including those for materials and construction methods for wildfire exposure as described in this chapter. Issuance of a building permit by the local building official for the proposed building shall be considered as complying with this section.
2. Building permit final. The local building official shall, upon completion of construction, provide the owner or applicant with a copy of the final inspection report that demonstrates the building was constructed in compliance with all applicable state and local building standards, including those for materials and construction methods for wildfire exposure as described in this chapter. Issuance of a certificate of occupancy by the local building official for the proposed building shall be considered as complying with this section.

701A.5 Vegetation management compliance. *Prior to building permit final approval, the property shall be in compliance with the vegetation management requirements prescribed in California Fire Code Section 4906, including California Public Resources Code 4291 or California Government Code Section 51182. Acceptable methods of compliance inspection and documentation shall be determined by the enforcing agency and may include any of the following:*

1. Local, state or federal fire authority or designee authorized to enforce vegetation management requirements
2. Enforcing agency
3. Third party inspection and certification authorized to enforce vegetation management requirements
4. Property owner certification authorized by the enforcing agency

SECTION 702A
DEFINITIONS

For the purposes of this chapter, certain terms are defined below:

CDF DIRECTOR *means the Director of the California Department of Forestry and Fire Protection.*

EXTERIOR COVERING. *The exposed siding or cladding material applied to the exterior side of an exterior wall, roof eave soffit, floor projection or exposed underfloor framing.*

FIRE PROTECTION PLAN *is a document prepared for a specific project or development proposed for aWildland Urban Interface Fire Area. It describes ways to minimize and mitigate potential for loss from wildfire exposure.*

The Fire Protection Plan shall be in accordance with this chapter and the California Fire Code, Chapter 49. When required by the enforcing agency for the purposes of granting modifications, a fire protection plan shall be submitted. Only locally adopted ordinances that have been filed with the California Building Standards Commission or the Department of Housing and Community Development in accordance with Section 1.1.8 shall apply.

FIRE HAZARD SEVERITY ZONES *are geographical areas designated pursuant to California Public Resources Codes Sections 4201 through 4204 and classified as Very High, High, or Moderate in State Responsibility Areas or as Local Agency Very High Fire Hazard Severity Zones designated pursuant to California Government Code, Sections 51175 through 51189. See California Fire Code ~~Article 86~~Chapter 49.*

The California Code of Regulations, Title 14, Section 1280, entitles the maps of these geographical areas as "Maps of the Fire Hazard Severity Zones in the State Responsibility Area of California."

HEAVY TIMBER. *A type of construction classification specified in Section 602. For use in this chapter, heavy timber shall be sawn lumber or glue laminated wood with the smallest minimum nominal dimension of 4 inches (102 mm). Heavy timber walls or floors shall be sawn or glue-laminated planks splined, tongue-and-grove, or set close together and well spiked.*

IGNITION-RESISTANT MATERIAL. *A type of building material that resists ignition or sustained flaming combustion sufficiently so as to reduce losses from wildland-urban interface conflagrations under worst-case weather and fuel conditions with wildfire exposure of burning embers and small flames, as prescribed in Section 703A and SFM Standard 12-7A-5, Ignition-Resistant Material.*

LOCAL AGENCY VERY HIGH FIRE HAZARD SEVERITY ZONE *means an area designated by a local agency upon the recommendation of the CDF Director pursuant to Government Code Sections 51177(c), 51178 and 5118 that is not a state responsibility area and where a local agency, city, county, city and county, or district is responsible for fire protection.*

LOG WALL CONSTRUCTION. *A type of construction in which exterior walls are constructed of solid wood members and where the smallest horizontal dimension of each solid wood member is at least 6 inches (152 mm).*

RAFTERTAIL. *The portion of roof rafter framing in a sloping roof assembly that projects beyond and overhangs an exterior wall.*

ROOF EAVE. *The lower portion of a sloping roof assembly that projects beyond and overhangs an exterior wall at the lower end of the rafter tails. Roof eaves may be either "open" or "enclosed." Open roof eaves have exposed rafter tails and an unenclosed space on the underside of the roof deck. Enclosed roof eaves have a boxed-in roof eave soffit with a horizontal underside or sloping rafter tails with an exterior covering applied to the underside of the rafter tails.*

ROOF EAVE SOFFIT. *An enclosed boxed-in soffit under a roof eave with exterior covering material applied to the soffit framing creating a horizontal surface on the exposed underside.*

STATE RESPONSIBILITY AREA *means lands that are classified by the Board of Forestry pursuant to Public Resources Code Section 4125 where the financial responsibility of preventing and suppressing forest fires is primarily the responsibility of the state.*

WILDFIRE *is any uncontrolled fire spreading through vegetative fuels that threatens to destroy life, property, or resources as defined in Public Resources Code Sections 4103 and 4104.*

WILDFIRE EXPOSURE *is one or a combination of radiant heat, convective heat, direct flame contact and burning embers being projected by vegetation fire to a structure and its immediate environment.*

WILDLAND-URBAN INTERFACE FIRE AREA *is a geographical area identified by the state as a "Fire Hazard Severity Zone" in accordance with the Public Resources Code Sections 4201 through 4204 and Government Code Sections 51175 through 51189, or other areas designated by the enforcing agency to be at a significant risk from wildfires.*

SECTION 703A
STANDARDS OF QUALITY

703A.1 General. *Building material, systems, assemblies and methods of construction used in this chapter shall be in accordance with Section 703A.*

703A.2 Qualification by testing. *Material and material assemblies tested in accordance with the requirements of Section 703A shall be accepted for use when the results and conditions of those tests are* met. *Product evaluation testing of material and material assemblies shall be approved or listed by the State Fire Marshal, or identified in a current report issued by an approved agency.*

703A.3 Approved agency. *Product evaluation testing shall be performed by an approved agency as defined in Section 1702. The scope of accreditation for the approved agency shall include building product compliance with this code.*

703A.4 Labeling. *Material and material assemblies tested in accordance with the requirements of Section 703A shall bear an identification label showing the fire test results. That identification label shall be issued by a testing and/or inspecting agency approved by the State Fire Marshal.*

1. Identification mark of the approved testing and/or inspecting agency
2. Contact and identification information of the manufacturer
3. Model number or identification of the product or material
4. Pre-test weathering specified in this chapter
5. Compliance standard as described under Section 703A.7

703A.5 Weathering and surface treatment protection.

703A.5.1 General. *Material and material assemblies tested in accordance with the requirements of Section 703A shall maintain their fire test performance under conditions of use, when installed in accordance with the manufacturers instructions.*

703A.5.2 Weathering. *Fire-retardant-treated wood and fire-retardant-treated wood shingles and shakes shall meet the fire test performance requirements of this chapter after being subjected to the weathering conditions contained in the following standards, as applicable to the materials and the conditions of use.*

703A.5.2.1 Fire-retardant-treated wood. *Fire-retardant-treated wood shall be tested in accordance with ASTM D 2898, "Standard Practice for Accelerated Weathering of Fire-Retardant Treated Wood for Fire Testing (Method A)" and the requirements of Section 2303.2.*

703A.5.2.2 Fire-retardant-treated wood shingles and shakes. *Fire-retardant-treated wood shingles and shakes shall be approved and listed by the State Fire Marshal in accordance with Section 208(c), Title 19 California Code of Regulations.*

703A.5.3 Surface treatment protection. *The use of paints, coatings, stains or other surface treatments are not an approved method of protection as required in this chapter.*

703A.6 Alternates for materials, design, tests and methods of construction. *The enforcing agency is permitted to modify the provisions of this chapter for site-specific conditions in accordance with Section 1.11.2.4. When required by the enforcing agency for the purposes of granting modifications, a fire protection plan shall be submitted in accordance with the California Fire Code, Chapter 49.*

703A.7 Standards of quality. *The State Fire Marshal standards for exterior wildfire exposure protection listed below and as referenced in this chapter are located in the California Referenced Standards Code, Part 12 and Chapter 35 of this code.*

SFM Standard 12-7A-1, *Exterior Wall Siding and Sheathing. A fire resistance test standard consisting of a 150 kW intensity direct flame exposure for a 10-minute duration.*

SFM Standard 12-7A-2, *Exterior Windows. A fire resistance test standard consisting of a 150 kW intensity direct flame exposure for a 8-minute duration.*

SFM Standard 12-7A-3, *Horizontal Projection Underside A fire resistance test standard consisting of a 300 kW intensity direct flame exposure for a 10-minute duration.*

SFM Standard 12-7A- 4, *Decking. A two-part test consisting of a heat release rate (Part A) deck assembly combustion test with an under deck exposure of 80 kW intensity direct flame for a 3-minute duration, and a (Part B) sustained deck assembly combustion test consisting of a deck upper surface burning ember exposure with a 12 mph wind for 40 minutes using a 2.2 lb (1 kg) burning "Class A" size 12" x 12" x 2.25" (300 mm x 300 mm x 57 mm) roof test brand.*

SFM Standard 12-7A-4A, *Decking Alternate Method A. A heat release rate deck assembly combustion test with an under deck exposure of 80 kW intensity direct flame for a 3-minute duration,*

SFM Standard 12-7A-5, *Ignition-resistant Material. A generic building material surface burning flame spread test standard consisting of an extended 30 minute ASTM E84 or UL 723 test method as is used for fire-retardant-treated wood.*

SECTION 704A
IGNITION-RESISTANT CONSTRUCTION

704A.1 General. *The materials prescribed herein for ignition resistance shall conform to the requirements of this chapter.*

704A.2 Ignition-resistant material. *Ignition-resistant material shall be determined in accordance with the test procedures set forth in SFM Standard 12-7A-5 "Ignition-Resistant Material" or in accordance with this section.*

704A.3 Alternative methods for determining ignition-resistant material. *Any one of the following shall be accepted as meeting the definition of ignition-resistant material:*

1. Noncombustible material. Material that complies with the definition for noncombustible materials in Section 202.
2. Fire-retardant-treated wood. Fire-retardant-treated wood identified for exterior use that complies with the requirements of Section 2303.2.

3. Fire-retardant-treated wood shingles and shakes. Fire-retardant-treated wood shingles and shakes, as defined in Section 1505.6 and listed by State Fire Marshal for use as "Class B" roof covering, shall be accepted as an ignition-resistant wall covering material when installed over solid sheathing.

SECTION 705A
ROOFING

705A.1 General. *Roofs shall comply with the requirements of Chapter 7A and Chapter 15. Roofs shall have a roofing assembly installed in accordance with its listing and the manufacturer's installation instructions.*

705A.2 Roof coverings. *Where the roof profile allows a space between the roof covering and roof decking, the spaces shall be constructed to prevent the intrusion of flames and embers, be firestopped with approved materials or have one layer of minimum 72 pound (32.4 kg) mineral-surfaced nonperforated cap sheet complying with ASTM D3909 installed over the combustible decking.*

705A.3 Roof valleys. *Where valley flashing is installed, the flashing shall be not less than 0.019-inch (0.48 mm) No. 26 gage galvanized sheet corrosion-resistant metal installed over not less than one layer of minimum 72 pound (32.4 kg) mineral- surfaced nonperforated cap sheet complying with ASTM D 3909, at least 36-inch-wide (914 mm) running the full length of the valley.*

705A.4 Roof gutters. *Roof gutters shall be provided with the means to prevent the accumulation of leaves and debris in the gutter.*

SECTION 706A
VENTS

706A.1 General. *Where provided, ventilation openings for enclosed attics, enclosed eave soffit spaces, enclosed rafter spaces formed where ceilings are applied directly to the underside of roof rafters, and underfloor ventilation shall be in accordance with Section 1203 and Sections 706A.1 through 706A.3 to resist building ignition from the intrusion of burning embers and flame through the ventilation openings.*

SECTION 707A
EXTERIOR COVERING

707A.1 Scope. *The provisions of this section shall govern the materials and construction methods used to resist building ignition and/or safeguard against the intrusion of flames resulting from small ember and short-term direct flame contact exposure.*

707A.2 General. *The following exterior covering materials and/or assemblies shall comply with this section:*

1. Exterior wall covering material
2. Exterior wall assembly
3. Exterior exposed underside of roof eave overhangs
4. Exterior exposed underside of roof eave soffits
5. Exposed underside of exterior porch ceilings
6. Exterior exposed underside of floor projections
7. Exterior underfloor areas

Exceptions:
1. Exterior wall architectural trim, embellishments, fascias, and gutters
2. Roof or wall top cornice projections and similar assemblies
3. Roof assembly projections over gable end walls
4. Solid wood rafter tails and solid wood blocking installed between rafters having minimum dimension 2 inch (50.8 mm) nominal
5. Deck walking surfaces shall comply with Section 709A.4 only

707A.3 Exterior walls. *The exterior wall covering or wall assembly shall comply with one of the following requirements:*

1. Noncombustible material
2. Ignition-resistant material
3. Heavy timber exterior wall assembly
4. Log wall construction assembly
5. Wall assemblies that meet the performance criteria in accordance with the test procedures for a 10-minute direct flame contact exposure test set forth in SFM Standard 12-7A-1

Exception: *Any of the following shall be deemed to meet the assembly performance criteria and intent of this section:*

1. One layer of 5/8-inch Type X gypsum sheathing applied behind the exterior covering or cladding on the exterior side of the framing
2. The exterior portion of a 1-hour fire resistive exterior wall assembly designed for exterior fire exposure including assemblies using the gypsum panel and sheathing products listed in the Gypsum Association Fire Resistance Design Manual

707A.3.1 Extent of exterior wall covering. *Exterior wall coverings shall extend from the top of the foundation to the roof, and terminate at 2 inch (50.8 mm) nominal solid wood blocking between rafters at all roof overhangs, or in the case of enclosed eaves, terminate at the enclosure.*

707A.4 Open roof eaves. *The exposed roof deck on the underside of unenclosed roof eaves shall consist of one of the following:*

1. Noncombustible material
2. Ignition-resistant material
3. One layer of 5/8-inch Type X gypsum sheathing applied behind an exterior covering on the underside exterior of the roof deck
4. The exterior portion of a 1-hour fire resistive exterior wall assembly applied to the underside of the roof deck designed for exterior fire exposure including assemblies using the gypsum panel and sheathing products listed in the Gypsum Association Fire Resistance Design Manual

Exceptions: *The following materials do not require protection:*
1. Solid wood rafter tails on the exposed underside of open roof eaves having a minimum nominal dimension of 2 inch (50.8 mm)
2. Solid wood blocking installed between rafter tails on the exposed underside of open roof eaves having a minimum nominal dimension of 2 inch (50.8 mm)
3. Gable end overhangs and roof assembly projections beyond an exterior wall other than at the lower end of the rafter tails
4. Fascia and other architectural trim boards

SECTION 708A
EXTERIOR WINDOWS AND DOORS

708A.1 General.

708A.2 Exterior glazing. *The following exterior glazing materials and/or assemblies shall comply with this section:*

1. Exterior windows
2. Exterior glazed doors
3. Glazed openings within exterior doors
4. Glazed openings within exterior garage doors
5. Exterior structural glass veneer

708A.2.1 Exterior windows and exterior glazed door assembly requirements. *Exterior windows and exterior glazed door assemblies shall comply with one of the following requirements:*

1. Be constructed of multipane glazing with a minimum of one tempered pane meeting the requirements of Section 2406 Safety Glazing, or
2. Be constructed of glass block units, or
3. Have a fire-resistance rating of not less than 20 minutes when tested according to NFPA 257, or

4. Be tested to meet the performance requirements of SFM Standard 12-7A-2

708A.2.2 Structural glass veneer. *The wall assembly behind structural glass veneer shall comply with Section 707A.3.*

708A.3 Exterior doors. *Exterior doors shall comply with one of the following:*

1. The exterior surface or cladding shall be of noncombustible or ignition-resistant material, or
2. Shall be constructed of solid core wood that comply with the following requirements:
2.1. Stiles and rails shall not be less than 13/8 inches thick.
2.2. Raised panels shall not be less than 11/4 inches thick, except for the exterior perimeter of the raised panel that may taper to a tongue not less than 3/8 inch thick.

3. Shall have a fire-resistance rating of not less than 20 minutes when tested according to NFPA 252.
4. Shall be tested to meet the performance requirements of SFM Standard 12-7A-1.

708A.3.1 Exterior door glazing. *Glazing in exterior doors shall comply with Section 708A.2.1.*

SECTION 709A
DECKING

709A.1 General. *The walking surface material of decks, porches, balconies and stairs shall comply with the requirements of this section.*

709A.2 Where required. *The walking surface material of decks, porches, balconies and stairs shall comply with the requirements of this section when any portion of such surface is within 10 feet (3048 mm) of the building.*

709A.3 Decking Surfaces. *The walking surface material of decks, porches, balconies and stairs shall be constructed with one of the following materials:*

1. Ignition-resistant material that complies with the performance requirements of both SFM Standard 12-7A-4 and SFM Standard 12-7A-5.
2. Exterior fire retardant treated wood
3. Noncombustible material
4. Any material that complies with the performance requirements of SFM Standard 12-7A-4A when attached exterior wall covering is also either noncombustible or ignition-resistant material.

Exception: *Wall material may be of any material that otherwise complies with this chapter when the decking surface material complies with the performance requirements ASTM E 84 with a Class B flame spread rating.*

SECTION 710A
ACCESSORY STRUCTURES

710A.1 General. *Accessory and miscellaneous structures, other than buildings covered by Section 701A.3, which pose a significant exterior exposure hazard to applicable buildings during wildfires shall be constructed to conform to the ignition resistance requirements of this section.*

710A.2 Applicability. *The provisions of this section shall apply to trellises, arbors, patio covers, carports, gazebos and similar structures of an accessory or miscellaneous character.*

Exceptions:
1. Decks shall comply with the requirements of Section 709A.
2. Awnings and canopies shall comply with the requirements of Section 3105.

710A.3 Where required. *Accessory structures shall comply with the requirements of this section.*

710A.3.1 *Attached accessory structures shall comply with the requirements of this section.*

710A.3.2 *When required by the enforcing agency, detached accessory structures within 50 feet of an applicable building shall comply with the requirements of this section.*

710A.4. Requirements. *When required by the enforcing agency accessory structures shall be constructed of noncombustible or ignition-resistant materials.*

CHAPTER 8
INTERIOR FINISHES

TABLE 803.11
INTERIOR WALL AND CEILING FINISH REQUIREMENTS BY OCCUPANCY[k]

GROUP	SPRINKLERED[l]			NONSPRINKLERED		
	Interior exit stairways and interior exit ramps and exit passageways [a, b]	Corridors and enclosure for exit access stairways and exit access ramps	Rooms and enclosed spaces [c]	Interior exit stairways and interior exit ramps and exit passageways [a, b]	Corridors and enclosure for exit access stairways and exit access ramps	Rooms and enclosed spaces [c]
A-1 & A-2	B	B	C	A	A[d]	B[e]
A-3[f], A-4, A-5	B	B	C	A	A[d]	C
B, E, M, R-1	B	C	C	A	B	C
R-4[m]	B	C	C	A	B	B
F	C	C	C	B	C	C
H, *L*	B	B	C[g]	A	A	B
~~I-1~~	~~B~~	~~C~~	~~C~~	~~A~~	~~B~~	~~B~~
I-2, *I-2.1*	B	B	B[h, i]	A	A	B
I-3	A	A[j]	~~C~~ *B*	~~A~~ *NP*	~~A~~ *NP*	~~B~~ *NP*
I-4	B	B	B[h, i]	A	A	B
R-2	C	C	C	B	B	C
R-2.1	*B*	*C*	*C*	*A*	*B*	*B*
R-3[m], *R-3.1*	C	C	C	C	C	C
S	C	C	C	B	B	C
U	No restrictions			No restrictions		

For SI: 1 inch = 25.4 mm, 1 square foot = 0.0929m2.
NP = Not permitted [SFM]

a. Class C interior finish materials shall be permitted for wainscotting or paneling of not more than 1,000 square feet of applied surface area in the grade lobby where applied directly to a noncombustible base or over furring strips applied to a noncombustible base and fireblocked as required by Section 803.13.1.

b. In other than Group I-3 occupancies in buildings less than three stories above grade plane, Class B interior finish for nonsprinklered buildings and Class C interior finish for sprinklered buildings shall be permitted in interior exit stairways and ramps.

~~b. In other than Group I-2 *and I-2.1* occupancies in buildings less than three stories above grade plane of other than Group I-3, Class B interior finish for nonsprinklered buildings and Class C interior finish for sprinklered buildings shall be permitted in interior exit stairways and ramps.~~

c. Requirements for rooms and enclosed spaces shall be based upon spaces enclosed by partitions. Where a fire-resistance rating is required for structural elements, the enclosing partitions shall extend from the floor to the ceiling. Partitions that do not comply with this shall be considered enclosing spaces and the rooms or spaces on both sides shall be considered one. In determining the applicable requirements for rooms and enclosed spaces, the specific occupancy thereof shall be the governing factor regardless of the group classification of the building or

structure.
d. Lobby areas in Group A-1, A-2 and A-3 occupancies shall not be less than Class B materials.
e. Class C interior finish materials shall be permitted in places of assembly with an occupant load of 300 persons or less.
f. For places of religious worship, wood used for ornamental purposes, trusses, paneling or chancel furnishing shall be permitted.
g. Class B material is required where the building exceeds two stories.
h. Class C interior finish materials shall be permitted in administrative spaces.
i. Class C interior finish materials shall be permitted in rooms with a capacity of four persons or less.
j. Class B materials shall be permitted as wainscotting extending not more than 48 inches above the finished floor in corridors and exit access stairways and ramps.
k. Finish materials as provided for in other sections of this code.
l. Applies when protected by an automatic sprinkler system installed in accordance with Section 903.3.1.1 or 903.3.1.2.
m. Where Group R-3 and R-4 occupancies are permitted in Section 903.2.8 to be protected by automatic sprinkler system installed in accordance with Section 903.3.1.3 the requirements for a non-sprinklered building shall apply.

804.4 Interior floor finish requirements. Interior floor covering materials shall comply with Sections 804.4.1 and 804.4.2 and interior floor finish materials shall comply with Section ~~804.4.2~~*804.4.3*.

804.4.1 Test requirement. In all *other* occupancies *except I-3, interior floor finish and* interior floor covering materials shall comply with the requirements of the ~~DOC FF-1 "pill test" (CPSC 16 CFR Part 1630) or with ASTM D 2859~~ *ASTM Standard E 648, and having a Specific Optical Density smoke rating not to exceed 450 per ASTM E 662. For Group I-3 occupancies see Section 804.4.3.*

804.4.2 Minimum critical radiant flux. In all occupancies, interior floor finish and floor covering materials in enclosures for stairways and ramps, exit passageways, corridors and rooms or spaces not separated from corridors by partitions extending from the floor to the underside of the ceiling shall withstand a minimum critical radiant flux. The minimum critical radiant flux shall be not less than Class I in Groups ~~I-1,~~ I-2 and ~~I-3~~ *R-2.1* and not less than Class II in Groups A, B, E, H, *I-2.1*, I- 4, M, R-1, R-2 and S.

Exception: Where a building is equipped throughout with an automatic sprinkler system in accordance with Section 903.3.1.1 or 903.3.1.2, Class II materials are permitted in any area where Class I materials are required, and materials complying with ~~DOC FF-1 "pill test" (CPSC 16 CFR Part 1630) or with ASTM D 2859~~*ASTM Standard E 648, and having a Specific Optical Density smoke rating not to exceed 450 per ASTM E 662* are permitted in any area where Class II materials are required.

804.4.3 Group I-3 Occupancy floor surfaces. *Interior floor finish and floor coverings occupied by inmates or patients whose personal liberties are restrained shall be noncombustible.*

Exception: *Noncombustible floor finish and floor coverings in areas where restraint is not used may have carpet or other floor covering materials applied in areas protected by an automatic sprinkler system and meeting ASTM Standard E 648, and having a specific optical density smoke rating not to exceed 450 per ASTM E 662. The carpeting and carpet padding shall be tested as a unit in accordance with floor covering radiant panel test meeting class 1 and has a critical radiant flux limit of not less than 0.45 watt per centimeter square. The carpeting and padding shall be identified by a hang-tag or other suitable method as to manufacturer and style and shall indicate the classification of the material based on the limits set forth above.*

[Editorial Note: Remove existing amendments to Section 806.1. Model code section has changed and amendment no longer applies.]
~~**806.1 General requirements.** In occupancies in Groups A, E, I and R-1 and dormitories in Group R-2, curtains, draperies, hangings and other decorative materials suspended from walls or ceilings shall meet the flame propagation performance criteria of NFPA 701 in accordance with Section 806.2 or be noncombustible.~~

~~**Exceptions:**~~
~~1. Curtains, draperies, hangings and other decorative materials suspended from walls of sleeping units and dwelling units in dormitories in Group R-2 protected by an approved automatic sprinkler system installed in accordance with Section 903.3.1 and such materials are limited to not more than 50 percent of the aggregate area of walls.~~
~~2. Decorative materials, including, but not limited to, photographs and paintings in dormitories in Group R-2 where~~

~~such materials are of limited quantities such that a hazard of fire development or spread is not present.~~

~~In Groups I-1, and I-2 *and I-2.1*, combustible decorative materials shall meet the flame propagation criteria of NFPA 701 unless the decorative materials, including, but not limited to, photographs and paintings, are of such limited quantities that a hazard of fire development or spread is not present. In Group I-3, combustible decorative materials are prohibited.~~

~~Fixed or movable walls and partitions, paneling, wall pads and crash pads applied structurally or for decoration, acoustical correction, surface insulation or other purposes shall be considered interior finish if they cover 10 percent or more of the wall or of the ceiling area, and shall not be considered decorative materials or furnishings.~~

~~In Group B and M occupancies, fabric partitions suspended from the ceiling and not supported by the floor shall meet the flame propagation performance criteria in accordance with Section 806.2 and NFPA 701 or shall be noncombustible.~~

806.7 Interior trim. Material, other than foam plastic used as interior trim, shall have a minimum *Class B flame spread and 450 smoke-developed index in Group I-3 and for all other occupancies* Class C flame spread and smoke-developed index when tested in accordance with ASTM E 84 or UL 723, as described in Section 803.1.1. Combustible trim, excluding handrails and guardrails, shall not exceed 10 percent of the specific wall or ceiling area in which it is attached.

CHAPTER 9
FIRE PROTECTION SYSTEMS

901.2 Fire protection systems. Fire protection systems shall be installed, repaired, operated and maintained in accordance with this code and the ~~*International*~~*California Fire Code*.

Any fire protection system for which an exception or reduction to the provisions of this code has been granted shall be considered to be a required system.

Exception: Any fire protection system or portion thereof not required by this code shall be permitted to be installed for partial or complete protection provided that such system meets the requirements of this code.

901.3 Modifications. Persons shall not remove or modify any fire protection system installed or maintained under the provisions of this code or the ~~*International*~~*California Fire Code* without approval by the building official.

901.5 Acceptance tests. Fire protection systems shall be tested in accordance with the requirements of this code and the ~~*International*~~*California Fire Code*. When required, the tests shall be conducted in the presence of the building official. Tests required by this code, the ~~*International*~~*California Fire Code* and the standards listed in this code shall be conducted at the expense of the owner or the owner's authorized agent. It shall be unlawful to occupy portions of a structure until the required fire protection systems within that portion of the structure have been tested and approved.

901.6.2 Fire alarm systems. Fire alarm systems required by the provisions of Section 907.2 of this code and Sections 907.2 and 907.9 of the ~~*International*~~*California Fire Code* shall be monitored by an approved supervising station in accordance with Section 907.6.6.

Exceptions:
1. Single- and multiple-station smoke alarms required by Section 907.2.11.
2. Smoke detectors in Group I-3 occupancies.
3. Supervisory service is not required for automatic sprinkler systems in one- and two-family dwellings.

902.1 Definitions. The following terms are defined in Chapter 2.

ALARM NOTIFICATION APPLIANCE.
ALARM SIGNAL.
ALARM VERIFICATION FEATURE.
ANNUNCIATOR.
AUDIBLE ALARM NOTIFICATION APPLIANCE.

AUTOMATIC.
AUTOMATIC FIRE-EXTINGUISHING SYSTEM.
AUTOMATIC SMOKE DETECTION SYSTEM.
AUTOMATIC SPRINKLER SYSTEM.
AUTOMATIC WATER MIST SYSTEM.
AVERAGE AMBIENT SOUND LEVEL.
CARBON DIOXIDE EXTINGUISHING SYSTEMS.
CEILING LIMIT.
CLEAN AGENT.
COMMERCIAL MOTOR VEHICLE.
CONSTANTLY ATTENDED LOCATION.
DELUGE SYSTEM.
DETECTOR, HEAT.
DRY-CHEMICAL EXTINGUISHING AGENT.
ELECTRICAL CIRCUIT PROTECTIVE SYSTEM.
ELEVATOR GROUP.
EMERGENCY ALARM SYSTEM.
EMERGENCY VOICE/ALARM COMMUNICATIONS.
FIRE ALARM BOX, MANUAL.
FIRE ALARM CONTROL UNIT.
FIRE ALARM SIGNAL.
FIRE ALARM SYSTEM.
FIRE APPLIANCE.
FIRE AREA.
FIRE COMMAND CENTER.
FIRE DETECTOR, AUTOMATIC.
FIRE PROTECTION SYSTEM.
FIRE SAFETY FUNCTIONS.
FOAM-EXTINGUISHING SYSTEM.
HALOGENATED EXTINGUISHING SYSTEM.
INITIATING DEVICE.
MANUAL FIRE ALARM BOX.
MULTIPLE-STATION ALARM DEVICE.
MULTIPLE-STATION SMOKE ALARM.
NOTIFICATION ZONE.
NUISANCE ALARM.
PRIVATE GARAGE.
RECORD DRAWINGS.
SINGLE-STATION SMOKE ALARM.
SMOKE ALARM.
SMOKE DETECTOR.
SMOKEPROOF ENCLOSURE.
STANDPIPE SYSTEM, CLASSES OF.
Class I system.
Class II system.
Class III system.
STANDPIPE, TYPES OF.
Automatic dry.
Automatic wet.
Manual dry.
Manual wet.
Semiautomatic dry.
SUPERVISING STATION.
SUPERVISORY SERVICE.
SUPERVISORY SIGNAL.
SUPERVISORY SIGNAL-INITIATING DEVICE.
TIRES, BULK STORAGE OF.
TROUBLE SIGNAL.
VISIBLE ALARM NOTIFICATION APPLIANCE.

WET-CHEMICAL EXTINGUISHING SYSTEM.
WIRELESS PROTECTION SYSTEM.
ZONE.
ZONE, NOTIFICATION.

903.2 Where required. Approved automatic sprinkler systems in new buildings and structures shall be provided in the locations described in Sections 903.2.1 through 903.2.12.

~~**Exception:** Spaces or areas in telecommunications buildings used exclusively for telecommunications equipment, associated electrical power distribution equipment, batteries and standby engines, provided those spaces or areas are equipped throughout with an automatic smoke detection system in accordance with Section 907.2 and are separated from the remainder of the building by not less than 1-hour fire barriers constructed in accordance with Section 707 or not less than 2-hour horizontal assemblies constructed in accordance with Section 711, or both.~~

903.2.1.2 Group A-2. An automatic sprinkler system shall be provided for fire areas containing Group A-2 occupancies and intervening floors of the building where one of the following conditions exists:
1. The fire area exceeds 5,000 square feet (464.5 m^2).
2. The fire area has an occupant load of 100 or more.
3. The fire area is located on a floor other than a level of exit discharge serving such occupancies.
4. The structure exceeds 5,000 square feet (465 m2), contains more than one fire area containing a Group A-2 occupancy, and is separated into two or more buildings by fire walls of less than four hour fire resistance rating without openings.

903.2.1.3 Group A-3. An automatic sprinkler system shall be provided for fire areas containing Group A-3 occupancies and intervening floors of the building where one of the following conditions exists:

1. The fire area exceeds 12,000 square feet (1115 m^2).
2. The fire area has an occupant load of 300 or more.
3. The fire area is located on a floor other than a level of exit discharge serving such occupancies.
4. The structure exceeds 12,000 square feet (1155 m^2), contains more than one fire area containing exhibition and display rooms, and is separated into two or more buildings by fire walls of less than four hour fire resistance rating without openings.

903.2.3 Group E. An automatic sprinkler system shall be provided for Group E occupancies as follows:

1. Throughout all Group E fire areas greater than 12,000 square feet (1115 m^2) in area.
2. Throughout every portion of educational buildings below the lowest *level of exit discharge* serving that portion of the building.

Exception: An automatic sprinkler system is not required in any area below the lowest level of exit discharge serving that area where every classroom throughout the building has not fewer than one exterior *exit* door at ground level.

3. In rooms or areas with special hazards such as laboratories, vocational shops and other such areas where hazardous materials in quantities not exceeding the maximum allowable quantity are used or stored.
4. Throughout any Group E structure greater than 12,000 square feet (1115 m^2) in area, which contains more than one fire area, and which is separated into two or more buildings by fire walls of less than four hour fire resistance rating without openings.
5. For public school state funded construction projects see Section 903.2.19.

903.2.4.1 Woodworking operations. An automatic sprinkler system shall be provided throughout all Group F-1 occupancy fire areas that contain woodworking operations in excess of 2,500 square feet (232 m2) in area that generate finely divided combustible waste or use finely divided combustible materials.
[SFM] A fire wall of less than four-hour fire-resistance rating without openings, or any fire wall with openings, shall not be used to establish separate fire areas.

903.2.5.4 Group H occupancies located above the 10th story. *The fire sprinkler system shall be designed and zoned to provide separate indication upon water-flow for each side of the 2-hour fire-smoke barrier above the 10th story.*

903.2.6 Group I. An automatic sprinkler system shall be provided throughout buildings with a Group I *fire area.*

Exceptions:
~~1. An automatic sprinkler system installed in accordance with Section 903.3.1.2 shall be permitted in Group I-1 Condition 1 facilities.~~
~~2. An automatic sprinkler system is not required where Group I-4 day care facilities are at the level of exit discharge and where every room where care is provided has not fewer than one exterior exit door.~~
~~3. In buildings where Group I-4 day care is provided on levels other than the level of exit discharge, an automatic sprinkler system in accordance with Section 903.3.1.1 shall be installed on the entire floor where care is provided, all floors between the level of care and the level of exit discharge, and all floors below the level of exit discharge other than areas classified as an open parking garage.~~
1. Those areas exempted by Section 407.6 of the California Building Code.
2. Pursuant to Health and Safety Code Section 13113 (d), Group I-2 occupancies, or any alterations thereto, located in Type IA construction in existence on March 4, 1972.

903.2.6.1 Group I-2. *In an existing, unsprinklered Group I-2, nurses' station open to fire-resistive exit access corridors shall be protected by an automatic sprinkler system located directly above the nurses' station. It shall be permitted to connect the automatic sprinkler system to the domestic water service.*

903.2.6.2 Group I-3. *Every building, or portion thereof, where inmates or persons are in custody or restrained shall be protected by an automatic sprinkler system conforming to NFPA 13. The main sprinkler control valve or valves and all other control valves in the system shall be locked in the open position and electrically supervised so that at least an audible and visual alarm will sound at a constantly attended location when valves are closed. The sprinkler branch piping serving cells may be embedded in the concrete construction.*

903.2.7 Group M. An automatic sprinkler system shall be provided throughout buildings containing a Group M occupancy where one of the following conditions exists:

1. A Group M fire area exceeds 12,000 square feet (1115 m^2).
2. A Group M fire area is located more than three stories above grade plane.
3. The combined area of all Group M fire areas on all floors, including any mezzanines, exceeds 24,000 square feet (2230 m2).
4. A Group M occupancy used for the display and sale of upholstered furniture or mattresses exceeds 5,000 square feet (464 m2).
5. The structure exceeds 24,000 square feet (465 m2), contains more than one fire area containing a Group M occupancy, and is separated into two or more buildings by fire walls of less than 4-hour fire resistance rating without openings.

903.2.7.1 High-piled storage. An automatic sprinkler system shall be provided in accordance with the ~~*International*~~*California Fire Code* in all buildings of Group M where storage of merchandise is in high-piled or rack storage arrays.

[Editorial Note: Remove amendment to 2013 CFC section 903:2.8.1. Current model code language to remain.]
~~**903.2.8.1 Group R-3 or R-4 congregate residences.** An automatic sprinkler system installed in accordance with Section 903.3.1.3 shall be permitted in Group R-3 or R-4 congregate residences with 16 or fewer residents.~~

903.2.8.4 ~~**Care facilities**~~***Group R-3.1.*** An automatic sprinkler system installed in accordance with Section 903.3.1.3 shall be permitted in ~~care facilities with five~~*Group R-3.1 occupancies with six* or fewer individuals in a single-family dwelling.

903.2.10 Group S-2 enclosed parking garages. An automatic sprinkler system shall be provided throughout buildings classified as enclosed parking garages in accordance with Section 406.6 where either of the following conditions exists:
1. Where the fire area of the enclosed parking garage exceeds 12,000 square feet (1115 m^2).
2. Where the enclosed parking garage is located beneath other groups.

~~**Exception:** Enclosed parking garages located beneath Group R-3 occupancies.~~

903.2.11.4 Ducts conveying hazardous exhausts. Where required by the ~~*International*~~*California Mechanical Code*, automatic sprinklers shall be provided in ducts conveying hazardous exhaust, or flammable or combustible materials.

Exception: Ducts where the largest cross-sectional diameter of the duct is less than 10 inches (254 mm).

TABLE 903.2.11.6
ADDITIONAL REQUIRED SUPPRESSION SYSTEMS

SECTION	SUBJECT
402.5, 402.6.2	Covered and open mall buildings
403.3	High rise buildings
403.3	High-rise buildings *and Group I-2 occupancies having occupied floors located more than 75 feet above the lowest level of fire department vehicle access*
404.3	Atriums
405.3	Underground structures
407.6	Group I-2
410.7	Stages
411.4	Special amusement buildings
412.3.6	Airport traffic control towers
412.4.6, 412.4.6.1, 412.6.5	Aircraft hangars
415.11.11	Group H-5 HPM exhaust ducts
416.5	Flammable finishes
417.4	Drying rooms
419.5	Live/work units
424.3	Children's play structures
~~*430*~~*440*	*Horse Racing Stables*
~~*431*~~*441*	*Pet Kennels*
~~*439*~~*449*	*Public Libraries*
507	Unlimited area buildings
509.4	Incidental use areas
1029.6.2.3	Smoke-protected assembly seating
~~IFC~~*CFC*	Sprinkler system requirements as set forth in Section 903.2.11.6 of the ~~*International*~~*California Fire Code*

For SI: 1 cubic foot = 0.023 m3.

903.2.12 During construction. Automatic sprinkler systems required during construction, alteration and demolition operations shall be provided in accordance with Chapter 33 of the ~~*International*~~*California Fire Code*.

903.2.13 ***Reserved.***

903.2.14 Motion picture and television production studio sound stages, approved production facilities and production locations.

903.2.14.1 Existing sound stages and approved production facilities. *All existing sound stages and approved production facilities equipped with an automatic fire sprinkler system shall be maintained in accordance with the provisions of California Fire Code Chapter 9.*

903.2.14.2 New sound stages. *All new sound stages shall be equipped with an approved automatic fire sprinkler system. The system shall be installed in accordance with the provisions of the California Fire Code Chapter 9 and shall meet the minimum design requirements of an Extra Hazard, Group 2 system.*

903.2.15 Automatic sprinkler system—existing highrise buildings. *See ~~Section 3414.27~~California Fire Code Chapter 11 and California Existing Building Code.*

903.2.15.1 Existing Group R-1 and R-2 high-rise buildings fire-extinguishing systems. *See ~~Section 3413.13.3.3~~California Fire Code Chapter 11 and California Existing Building Code.*

903.2.16 Group L occupancies. *An automatic sprinkler system shall be installed throughout buildings housing Group L occupancies. Sprinkler system design for research laboratories and similar areas of a Group L occupancy shall not be less than that required for Ordinary Hazard Group 2 with a design area of not less than 3,000 square feet (279 m2).*

In mixed occupancies, portions of floors or buildings not classified as Group L occupancies shall be provided with sprinkler protection designed of not less than that required for Ordinary Hazard Group 1 with a design area of not less than 3,000 square feet (279 m2).

903.2.16.1 Group L occupancies located above the 10th story. *The automatic sprinkler system shall be designed and zoned to provide separate indication upon water-flow for each side of the 2-hour fire-smoke barrier above the 10th story.*

903.2.17.1 Automatic sprinkler system. *An automatic sprinkler system shall be installed in all stations of fixed guideway transit systems.*

Exceptions:
1. Guideways when the closest sprinkler heads to the guideway are within 3 feet (914 mm) of the edge, over the platform, and spaced 6 feet (1829 mm) on center parallel to the guideway
2. Station agent booths not exceeding 150 square feet (13.9 m2) in area, when provided with an approved smoke detector connected to the building fire alarm system
3. Power substations
4. Machinery rooms, electrical rooms and train control rooms protected by an approved automatic fixed fire-extinguishing system
5. Open stations
6. Station platform areas open to three or more sides

903.2.17.2 Station guideway deluge system. *Underground stations and stations in open cuts with walls 5 feet (1524 mm) above he top of the running rail and with a raised platform shall be provided with an under-vehicle guideway manually activated deluge sprinkler system. In open cut stations, such system shall be provided in guideways which are situated between a raised platform edge and a retaining wall.*

903.2.17.2.1 *Systems shall be provided along the entire length of track at each station platform.*

903.2.17.2.2 *Deluge nozzles with caps shall be located in the approximate center of track with spacing designed to completely wet the undersides of the vehicle at the applied density.*

903.2.17.2.3 *System density shall be a minimum of 0.19 gallon per minute (gpm) per square foot (0.72 L/m per m2) for the design area. When more than one zone is provided, two adjacent zones are required to be considered operating for calculating purposes.*

903.2.17.2.4 *Deluge systems shall be directly connected to a water supply capable of supplying the required flow rate for a minimum 30-minute duration.*

903.2.17.2.5 *Controls or manually operable valves shall be in a location acceptable to the Fire Code Official. All deluge systems shall be monitored by the station fire alarm system.*

903.2.17.2.6 *Each valve shall be monitored by a separate circuit. The alarm panel shall be located in an area normally occupied by station personnel or signals shall be transmitted to the operations control center (OCC).*

903.2.18 Group U private garages and carports accessory to Group R-3 occupancies. *Carports with habitable space above and attached garages, accessory to Group R-3 occupancies, shall be protected by residential fire sprinklers in accordance with this section. Residential fire sprinklers shall be connected to, and installed in accordance with, an automatic residential fire sprinkler system that complies with Section R313 of the California Residential Code or with NFPA 13D. Fire sprinklers shall be residential sprinklers or quick-response sprinklers, designed to provide a minimum density of 0.05 gpm/ft2 (2.04 mm/min) over the area of the garage and/or carport, but not to exceed two sprinklers for hydraulic calculation purposes. Garage doors shall not be considered obstructions with respect to sprinkler placement.*

Exception: *An automatic residential fire sprinkler system shall not be required when additions or alterations are made to existing carports and/or garages that do not have an automatic residential fire sprinkler system installed in accordance with this section.*

903.2.19 Public school state funded construction projects for kindergarten through 12th grade — automatic sprinkler system requirements.

903.2.19.1 New public school campus. *An automatic sprinkler system shall be provided in all occupancies. The provisions of this section shall apply to any public school project consisting of one or more buildings on a new school campus and receiving state funds pursuant to Leroy F. Greene School Facilities Act of 1998, California Education Code sections 17070.10 through 17079. For purposes of this section, new campus refers to a school site, where an application for construction of original buildings was made to DSA on or after July 1, 2002.*

Exceptions:
1. A relocatable building that is sited with the intent that it be at the site for less than three years and is sited upon a temporary foundation in a manner that is designed to permit easy removal. Also see CCR, Title 24, Part 1, California Administrative Code, Section 4-314 for definition of relocatable building.
2. Detached buildings designed and used for non-instructional purposes that meet the applicable requirements for that occupancy. Buildings would include, but not be limited to:

Concession Stand
Press Box
Restroom Facilities
Shade Structure
Snack Bar
Storage Building
Ticket Booth

903.2.19.1.1 *Sprinklers shall be installed in spaces where the ceiling creates a "ceiling-plenum" or space above the ceiling is utilized for environmental air.*

903.2.19.1.2 Fire-resistive substitution for new campus. *A new public school campus shall be entitled to include in the design and construction documents all of the applicable fire-resistive construction substitutions as permitted by this code.*

903.3 Installation requirements. Automatic sprinkler systems shall be designed and installed in accordance with Sections 903.3.1 through ~~903.3.8~~ *903.3.9*.

903.3.1.1 NFPA 13 sprinkler systems. Where the provisions of this code require that a building or portion thereof be equipped throughout *with an automatic sprinkler* system in accordance with this section, sprinklers shall be installed throughout in accordance with NFPA 13 *as amended in Chapter 35* except as provided in Sections 903.3.1.1.1 and 903.3.1.1.2.

903.3.1.1.1 Exempt locations. *In other than Group I-2, I-2.1 and I-3 occupancies,* automatic sprinklers shall not be required in the following rooms or areas where such rooms or areas are protected with an approved automatic fire detection system in accordance with Section 907.2 that will respond to visible or invisible particles of combustion. Sprinklers shall not be omitted from a room merely because it is damp, of fire-resistance-rated construction or contains electrical equipment.

1. A room where the application of water, or flame and water, constitutes a serious life or fire hazard.
2. A room or space where sprinklers are considered undesirable because of the nature of the contents, where approved by the fire code official.
~~3. Generator and transformer rooms separated from the remainder of the building by walls and floor/ceiling or roof/ceiling assemblies having a fire-resistance rating of not less than 2 hours.~~
~~4. Rooms or areas that are of noncombustible construction with wholly noncombustible contents.~~
~~5~~3. Fire service access elevator machine rooms and machinery spaces.
~~6~~4. Machine rooms, machinery spaces, control rooms and control spaces associated with occupant evacuation elevators designed in accordance with Section 3008.
5. Spaces or areas in telecommunications buildings used exclusively for telecommunications equipment, and associated electrical power distribution equipment, provided those spaces or areas are equipped throughout with an automatic smoke detection system in accordance with Section 907.2 and are separated from the remainder of the building by not less than 1-hour fire barriers constructed in accordance with Section 707 or not less than 2-hour horizontal assemblies constructed in accordance with Section 712, or both.
6. Solar photovoltaic panel structures with no use underneath. Signs may be provided, as determined by the enforcing agency prohibiting any use underneath including storage.
7. Solar photovoltaic (PV) panels supported by framing that have sufficient uniformly distributed and unobstructed openings throughout the top of the array (horizontal plane) to allow heat and gases to escape, as determined by the enforcing agency.

903.3.1.2 NFPA 13R sprinkler systems. Automatic sprinkler systems in Group R occupancies up to and including four stories in height in buildings not exceeding 60 feet (18 288 mm) in height above grade plane shall be permitted to be installed throughout in accordance with NFPA 13R *as amended in Chapter 35.*

The number of stories of Group R occupancies constructed in accordance with Sections 510.2 and 510.4 shall be measured from the horizontal assembly creating separate buildings.

903.3.2 Quick-response and residential sprinklers. Where automatic sprinkler systems are required by this code, quick-response or residential automatic sprinklers shall be installed in all of the following areas in accordance with Section 903.3.1 and their listings:

1. Throughout all spaces within a smoke compartment containing care recipient sleeping units in Group I-2 in accordance with this code.
2. Throughout all spaces within a smoke compartment containing treatment rooms in ambulatory care facilities.
3. Dwelling units, and sleeping units in Group ~~I-1 and~~ R occupancies.
4. Light-hazard occupancies as defined in NFPA 13.

903.3.5 Water supplies. Water supplies for automatic sprinkler systems shall comply with this section and the standards referenced in Section 903.3.1. The potable water supply shall be protected against backflow in accordance with ~~the requirements of this section and the *International Plumbing Code*~~*Health and Safety Code Section 13114.7.* For connections to public waterworks systems, the water supply test used for design of fire protection systems shall be adjusted to account for seasonal and daily pressure fluctuations based on information from the water supply authority and as approved by the fire code official.

903.3.7 Fire department connections. Fire department connections for automatic sprinkler systems shall be installed in accordance with Section 912.~~*The location of fire department connections shall be approved by the fire code official.*~~

~~*903.3.8*~~ *903.3.9* ***Floor control valves.*** *Floor control valves and waterflow detection assemblies shall be installed at each floor where any of the following occur:*

1. Buildings where the floor level of the highest story is located more than 30 feet above the lowest level of fire department vehicle access

2. Buildings that are four or more stories in height
3. Buildings that are two or more stories below the highest level of fire department vehicle access

Exception: *Group R-3 and R-3.1 occupancies floor control valves and waterflow detection assemblies shall not be required.*

903.4.2 Alarms. ~~An Approved~~ *One exterior approved* audible device, located on the exterior of the building in an approved location, shall be connected to each automatic sprinkler system. Such sprinkler waterflow alarm devices shall be activated by water flow equivalent to the flow of a single sprinkler of the smallest orifice size installed in the system. Where a fire alarm system is installed, actuation of the automatic sprinkler system shall actuate the building fire alarm system. *Visible alarm notification appliances shall not be required except when required by section 907.*

903.4.3 Floor control valves. Approved supervised indicating control valves shall be provided at the point of connection to the riser on each floor in high-rise buildings *and Group I-2 occupancies having occupied floors located more than 75 feet above the lowest level of fire department vehicle access.*

903.5 Testing and maintenance. Sprinkler systems shall be tested and maintained in accordance with the ~~*International*~~*California Fire Code.*

904.2.2 Commercial hood and duct systems. Each required commercial kitchen exhaust hood and duct system required by Section 609 of the ~~*International*~~*California Fire Code* or Chapter 5 of the ~~*International*~~*California Mechanical Code* to have a Type I hood shall be protected with an approved automatic fire-extinguishing system installed in accordance with this code.

904.3.1 Electrical wiring. Electrical wiring shall be in accordance with *the* ~~NFPA 70~~*California Electrical Code.*

904.5 Wet-chemical systems. Wet-chemical extinguishing systems shall be installed, maintained, periodically inspected and tested in accordance with *California Code of Regulations, Title 19, Division 1, Chapter 5 and* NFPA 17A and their listing. Records of inspections and testing shall be maintained.

904.6 Dry-chemical systems. Dry-chemical extinguishing systems shall be installed, maintained, periodically inspected and tested in accordance with *California Code of Regulations, Title 19, Division 1, Chapter 5 and* NFPA 17 and their listing. Records of inspections and testing shall be maintained.

904.7 Foam systems. Foam-extinguishing systems shall be installed, maintained, periodically inspected and tested in accordance with *California Code of Regulations, Title 19, Division 1, Chapter 5,* NFPA 11 and NFPA 16 and their listing. Records of inspections and testing shall be maintained.

904.8 Carbon dioxide systems. Carbon dioxide extinguishing systems shall be installed, maintained, periodically inspected and tested in accordance with *California Code of Regulations, Title 19, Division 1, Chapter 5 and* NFPA 12 and their listing. Records of inspections and testing shall be maintained.

904.9 Halon systems. Halogenated extinguishing systems shall be installed, maintained, periodically inspected and tested in accordance with *California Code of Regulations, Title 19, Division 1, Chapter 5 and* NFPA 12A and their listing. Records of inspections and testing shall be maintained.

904.10 Clean-agent systems. Clean-agent fire-extinguishing systems shall be installed, maintained, periodically inspected and tested in accordance with *California Code of Regulations, Title 19, Division 1, Chapter 5 and* NFPA 2001 and their listing. Records of inspections and testing shall be maintained.

904.11.1.3 Water supply protection. Connections to a potable water supply shall be protected against backflow in accordance with the ~~*International*~~*California* Plumbing Code.

~~**904.11**~~**904.12 Commercial cooking systems.** ~~The automatic fire-extinguishing system for commercial cooking systems shall be of a type recognized for protection of commercial cooking equipment and exhaust systems of the type and arrangement protected. Preengineered automatic dry- and wet-chemical extinguishing systems shall be tested in accordance with UL 300 and listed and labeled for the intended application. Other types of automatic fire-extinguishing systems shall be listed and labeled for specific use as protection for commercial cooking operations. The system shall be installed in accordance with this code, its listing and the manufacturer's installation instructions.~~

~~Automatic fire-extinguishing systems of the following types shall be installed in accordance with the referenced standard indicated, as follows:~~ *Commercial cooking equipment that produces grease laden vapors shall be provided with a Type I Hood, in accordance with the California Mechanical Code, and an automatic fire extinguishing system that is listed and labeled for its intended use as follows:*
~~1. Carbon dioxide extinguishing systems, NFPA 12.~~
~~2. Automatic sprinkler systems, NFPA 13.~~
~~3. Foam-water sprinkler system or foam-water spray systems, NFPA 16.~~
~~4. Dry-chemical extinguishing systems, NFPA 17.~~
~~5. Wet-chemical extinguishing systems, NFPA 17A.~~
1. Wet chemical extinguishing system, complying with UL 300.
2. Carbon dioxide extinguishing systems.
3. Automatic fire sprinkler systems.

All existing dry chemical and wet chemical extinguishing systems shall comply with UL 300.
Exception:
Public schools kitchens, without deep-fat fryers, shall be upgraded to a UL 300 compliant system during state funded modernization projects that are under the jurisdiction of the Division of the State Architect.

All systems shall be installed in accordance with the California Mechanical Code, appropriate adopted standards, their listing and the manufacturer's installation instructions.

Exception: Factory-built commercial cooking recirculating systems that are tested, *listed, labeled and installed* in accordance with UL 710B and the *California Mechanical Code.*

905.1 General. Standpipe systems shall be provided in new buildings and structures in accordance with this sections 905.2 through 905.10. In buildings used for high-piled combustible storage, fire protection shall be in accordance with the ~~*International*~~*California* Fire Code.

905.2 Installation standard. Standpipe systems shall be installed in accordance with this section and NFPA 14 *as amended in Chapter 35.* Fire department connections for standpipe systems shall be in accordance with Section 912.

905.3 Required installations. Standpipe systems shall be installed where required by Sections 905.3.1 through ~~905.3.8~~905.3.*11.1.* Standpipe systems are allowed to be combined with automatic sprinkler systems.

Exception: Standpipe systems are not required in Group R-3 occupancies.

905.3.1 Height. *In other than Group R-3 and R-3.1 occupancies,* class III standpipe systems shall be installed throughout ~~buildings where the floor level of the highest story is located more than 30 feet (9144 mm) above the lowest level of fire department vehicle access, or where the floor level of the lowest story is located more than 30 feet (9144 mm) below the highest level of fire department vehicle access.~~*at each floor where any of the following occur:*

1. Buildings where the floor level of the highest *story* is located more than 30 feet (9144 mm)above the lowest level of fire department vehicle access.
2. Buildings that are four or more stories in height
3. Buildings where the floor level of the lowest *story* is located more than 30 feet (9144 mm) below the highest level of fire department vehicle access.
4. Buildings that are two or more stories below the highest level of fire department vehicle access.

Exceptions:
1. Class I standpipes are allowed in buildings equipped throughout with an automatic sprinkler system in accordance with Section 903.3.1.1 or 903.3.1.2.
2. Class I manual standpipes are allowed in open parking garages where the highest floor is located not more than 150 feet (45 720 mm) above the lowest level of fire department vehicle access.
3. Class I manual dry standpipes are allowed in open parking garages that are subject to freezing temperatures, provided that the hose connections are located as required for Class II standpipes in accordance with Section 905.5.
4. Class I standpipes are allowed in basements equipped throughout with an automatic sprinkler system.
5. In determining the lowest level of fire department vehicle access, it shall not be required to consider either of the following:
5.1. Recessed loading docks for four vehicles or less.

5.2. Conditions where topography makes access from the fire department vehicle to the building impractical or impossible.

905.3.6 Helistops and heliports. Buildings with a rooftop helistop or heliport shall be equipped with a Class I or III standpipe system extended to the roof level on which the helistop or heliport is located in accordance with Section 2007.5 of the ~~*International*~~*California Fire Code*.

905.3.9 Smokeproof enclosures. *For smokeproof enclosures see Section 909.20.*

905.3.10 Group I-3. *Housing units within cell complexes where 50 or more inmates are restrained, shall be provided with Class I wet standpipes. In addition, Class I wet standpipes shall be located so that it will not be necessary to extend hose lines through interlocking security doors and any doors in smoke-barrier walls, horizontal fire walls or fire barrier walls. Standpipes located in cell complexes may be placed in secured pipe chases.*

905.4 Location of Class I standpipe hose connections. Class I standpipe hose connections shall be provided in all of the following locations:

1. In every required interior exit stairway, a hose connection shall be provided for each story above and below grade. Hose connections shall be located at an intermediate landing between stories, unless otherwise *approved* by the fire code official. *See Section ~~909.20.3.2~~ 909.20.2.3 for additional provisions in smokeproof enclosures.*
2. On each side of the wall adjacent to the exit opening of a horizontal exit.

Exception: Where floor areas adjacent to a horizontal exit are reachable from an interior exit stairway hose connection by a ~~30-foot hose stream from~~ nozzle attached to 100 feet (30 480 mm) of hose *as measured along the path of travel*, a hose connection shall not be required at the horizontal exit.

3. In every exit passageway, at the entrance from the exit passageway to other areas of a building.

Exception: Where floor areas adjacent to an exit passageway are reachable from an interior exit stairway hose connection by a 30-foot (9144 mm) hose stream from a nozzle attached to 100 feet (30 480 mm) of hose, a hose connection shall not be required at the entrance from the exit passageway to other areas of the building.

4. In covered mall buildings, adjacent to each exterior public entrance to the mall and adjacent to each entrance from an exit passageway or exit corridor to the mall. In open mall buildings, adjacent to each public entrance to the mall at the perimeter line and adjacent to each entrance from an exit passageway or exit corridor to the mall.
5. Where the roof has a slope less than four units vertical in 12 units horizontal (33.3-percent slope), a hose connection shall be located to serve the roof or at the highest landing of an interior exit stairway with access to the roof provided in accordance with Section 1011.12.
6. Where the most remote portion of a ~~nonsprinklered~~ floor or story is more than 150 feet (45 720 mm) from a hose connection ~~or the most remote portion of a sprinklered floor or *story* is more than 200 (60 960mm) *150 feet (45 720 mm)* from a hose connection~~, the fire code official is authorized to require that additional hose connections be provided in *approved* locations. *The distances from a hose connection shall be measured along the path of travel.*

905.5 Location of Class II standpipe hose connections. Class II standpipe hose connections shall be accessible and located so that all portions of the building are within 30 feet (9144 mm) of *a listed variable stream fog nozzle* attached to 100 feet (30 480 mm) of hose.

TABLE 906.3(1)
FIRE EXTINGUISHERS FOR CLASS A FIRE HAZARDS

	LIGHT (Low) HAZARD OCCUPANCY	ORDINARY (Moderate) HAZARD OCCUPANCY	EXTRA (High) HAZARD OCCUPANCY
Minimum Rated Single Extinguisher	2-A[c]	2-A	4-A[a]

Maximum Floor Area Per Unit of A	3,000 square feet	1,500 square feet	1,000 square feet
Maximum Floor Area For Extinguisher[b]	11,250 square feet	11,250 square feet	11,250 square feet
Maximum distance of travel to extinguisher	75 feet	75 feet	75 feet

For SI: 1 foot = 304.8 mm, 1 square foot = 0.0929m2, 1 gallon = 3.785 L.

a. Two 21/2-gallon water-type extinguishers shall be deemed the equivalent of one 4-A rated extinguisher.

b. ~~Annex E.3.3 of NFPA10 provides more details~~*California Code of Regulations, Title 19, Division 1, Chapter 3* concerning application of the maximum floor area criteria.

c. Two water-type extinguishers each with a 1-A rating shall be deemed the equivalent of one 2-A rated extinguisher for Light (Low) Hazard Occupancies.

906.3.2 Class B fire hazards. Portable fire extinguishers for occupancies involving flammable or combustible liquids with depths less than or equal to 0.25-inch (6.4 mm) shall be selected and placed in accordance with Table 906.3(2).

Portable fire extinguishers for occupancies involving flammable or combustible liquids with a depth of greater than 0.25-inch (6.4 mm) shall be selected and placed in accordance with ~~NFPA 10~~*California Code of Regulations, Title 19, Division 1, Chapter 3.*

TABLE 906.3(2)
FIRE EXTINGUISHERS FOR FLAMMABLE OR COMBUSTIBLE LIQUIDS WITH DEPTHS LESS THAN OR EQUAL TO 0.25 INCH

TYPE OF HAZARD	BASIC MINIMUM EXTINGUISHER RATING	MAXIMUM DISTANCE OF TRAVEL TO EXTINGUISHERS (feet)
Light (Low)	5-B 10-B	30 50
Ordinary (Moderate)	10-B 20-B	30 50
Extra (High)	40-B 80-B	30 50

For SI: 1 inch = 25.4 mm, 1 foot = 304.8 mm.

Note. For requirements on water-soluble flammable liquids and alternative sizing criteria, see ~~Section 5.5 of NFPA 10~~*California Code of Regulations, Title 19, Division 1, Chapter 3.*

906.3.4 Class D fire hazards. Portable fire extinguishers for occupancies involving combustible metals shall be selected and placed in accordance with ~~NFPA10~~*California Code of Regulations, Title 19, Division 1, Chapter 3.*

907.1.2 Fire alarm shop drawings. Shop drawings for fire alarm systems shall be submitted for review and approval prior to system installation, and shall include, but not be limited to, all of the following where applicable to the system being installed:

1. A floor plan that indicates the use of all rooms.
2. Locations of alarm-initiating devices.
3. Locations of alarm notification appliances, including candela ratings for visible alarm notification appliances.

4. Design minimum audibility level for occupant notification.
5. Location of fire alarm control unit, transponders and notification power supplies.
6. Annunciators.
7. Power connection.
8. Battery calculations.
9. Conductor type and sizes.
10. Voltage drop calculations.
11. Manufacturers' data sheets indicating model numbers and listing information for equipment, devices and materials.
12. Details of ceiling height and construction.
13. The interface of fire safety control functions.
14. Classification of the supervising station.
15. All plans and shop drawings shall use the symbols identified in NFPA 170, Standard for Fire Safety and Emergency Symbols.

Exception: *Other symbols are allowed where approved by the enforcing agency*

907.1.3 Equipment. Systems and components shall be *California State Fire Marshal* listed and approved *in accordance with California Code of Regulations, Title 19, Division 1* for the purpose for which they are installed.

907.1.4 Fire-walls and fire barrier walls. *For the purpose of Section 907 fire walls and fire barrier walls shall not define separate buildings.*

907.1.5 Fire alarm use. *A fire alarm system shall not be used for any purpose other than fire warning or mass notification and where permitted by NFPA 72.*

907.2 Where required—new buildings and structures. An approved fire alarm system installed in accordance with the provisions of this code and NFPA 72 shall be provided in new buildings and structures in accordance with Sections 907.2.1 through 907.2.23 and provide occupant notification in accordance with Section 907.5, unless other requirements are provided by another section of this code.

Not fewer than one manual fire alarm box shall be provided in an approved location to initiate a fire alarm signal for fire alarm systems employing automatic fire detectors or waterflow detection devices. Where other sections of this code allow elimination of fire alarm boxes due to sprinklers, *or automatic fire alarm systems,* a single fire alarm box shall be installed *at a location approved by the enforcing agency.*

Exceptions:
1. The manual fire alarm box is not required for fire alarm ~~systems~~*control units* dedicated to elevator recall control, ~~and~~supervisory service *and fire sprinkler monitoring.*
2. The manual fire alarm box is not required for Group R-2 occupancies unless required by the fire code official to provide a means for fire watch personnel to initiate an alarm during a sprinkler system impairment event. Where provided, the manual fire alarm box shall not be located in an area that is accessible to the public.
3. The manual fire alarm box is not required to be installed when approved by the fire code official.

907.2.1 Group A. A manual fire alarm system that activates the occupant notification system in accordance with Section 907.5 shall be installed in Group A occupancies where the occupant load due to the assembly occupancy is 300 or more. Group A occupancies not separated from one another in accordance with Section 707.3.10 shall be considered as a single occupancy for the purposes of applying this section. Portions of Group E occupancies occupied for assembly purposes *with an occupant load of less than 1,000,* shall be provided with a fire alarm system as required for the Group E occupancy.

Exception: Manual fire alarm boxes are not required where the building is equipped throughout with an automatic sprinkler system installed in accordance with Section 903.3.1.1 and the occupant notification appliances will activate throughout the notification zones upon sprinkler waterflow.

Every Group A building used for educational purposes shall be provided with a manual or automatic fire alarm system. This provision shall apply to, but shall not necessarily be limited to, every community college and university.

Exception: *Privately owned trade or vocational schools or any firm or company which provides educational facilities and instructions for its employees.*

907.2.1.1 System initiation in Group A occupancies with an occupant load of 1,000 or more. Activation of the fire alarm in Group A occupancies with an occupant load of 1,000 or more shall initiate a signal using an emergency voice/alarm communications system in accordance with Section 907.5.2.2. *Group A occupancies with an occupant load of 10,000 or more, see Section 907.2.1.3.*

Exception: Where approved, the prerecorded announcement is allowed to be manually deactivated for a period of time, not to exceed 3 minutes, for the sole purpose of allowing a live voice announcement from an approved, constantly attended location.

907.2.1.3 Public address system. *Pursuant to Health and Safety Code Section 13108.9, for all buildings or structures constructed on or after July 1, 1991, which are intended for public assemblies of 10,000 or more persons a public address system with an emergency backup power system shall be required.*

907.2.2 Group B. A manual fire alarm system shall be installed in Group B occupancies where one of the following conditions exists:

1. The combined Group B occupant load of all floors is 500 or more.
2. The Group B occupant load is more than 100 persons above or below the lowest level of exit discharge.
3. The fire area contains an ambulatory care facility.
4. *Group B occupancies containing educational facilities, see Section 907.2.2.2.*

Exception: Manual fire alarm boxes are not required where the building is equipped throughout with an automatic sprinkler system installed in accordance with Section 903.3.1.1 and the occupant notification appliances will activate throughout the notification zones upon sprinkler water flow.

907.2.2.2 Group B Educational facilities. *Every Group B building used for educational purposes shall be provided with a manual or automatic fire alarm system. This provision shall apply to, but shall not necessarily be limited to, every community college and university.*

Exception: *Privately owned trade or vocational schools or any firm or company which provides educational facilities and instructions for its employees.*

907.2.3 Group E. A manual *and automatic* fire alarm system that initiates the occupant notification signal utilizing an emergency voice/alarm communication system meeting the requirements of Section 907.5.2.2 and installed in accordance with Section 907.6 shall be installed in Group E occupancies *with an occupant load of 50 or more persons or containing more than one classroom or one or more rooms used for Group E or I-4 day care purposes in accordance with this section.* When automatic sprinkler systems or smoke detectors are installed, such systems or detectors shall be connected to the building fire alarm system.

Exceptions:
~~1. A manual fire alarm system is not required in Group E occupancies with an occupant load of 50 or less.~~
~~2.~~*1.* Emergency voice/alarm communication systems meeting the requirements of Section 907.5.2.2 and installed in accordance with Section 907.6 shall not be required in Group E occupancies with occupant loads of 100 or less, provided that activation of the manual fire alarm system initiates an approved occupant notification signal in accordance with Section 907.5.
~~3~~2. Manual fire alarm boxes are not required in Group E occupancies where all of the following apply:
~~3.1~~*2.1.* Interior corridors are protected by smoke detectors.
~~3.2~~*2.2.* Auditoriums, cafeterias, gymnasiums and similar areas are protected by heat detectors or other approved detection devices.
~~3.3~~*2.3.* Shops and laboratories involving dusts or vapors are protected by heat detectors or other approved detection devices.
~~4~~3. Manual fire alarm boxes shall not be required in Group E occupancies where all of the following apply:
~~4.1~~*3.1.* The building is equipped throughout with an approved automatic sprinkler system installed in accordance with Section 903.3.1.1.
~~4.2~~*3.2.* The emergency voice/alarm communication system will activate on sprinkler water flow.
~~4.3~~*3.3.* Manual activation is provided from a normally occupied location.

~~4.4~~3.4. The capability to activate the evacuation signal from a central point is provided.
~~3~~4. For public school state funded construction projects see Section 907.2.29.

907.2.3.1 System connection. *Where more than one fire alarm control unit is used at the school campus, they shall be interconnected and shall operate all notification appliances.*

Exception: *Interconnection of fire alarm control units is not required when all the following are provided:*

1. Buildings that are separated a minimum of 20 feet (6096 mm) and in accordance with the California Building Code; and
2. There is a method of two way communication between each classroom and the school administrative office approved by the fire enforcing agency; and
3. A method of manual activation of each fire alarm system is provided.

907.2.3.2 Assemblies located within a Group E occupancy. *Assembly occupancies with an occupant load of less than 1,000 and located within a Group E occupancy campus or building shall be provided with a fire alarm system as required for the Group E occupancy.*

907.2.3.3 Notification. *The fire alarm system notification shall comply with the requirements of Section 907.5.*

907.2.3.4 Annunciation. *Annunciation of the fire alarm system shall comply with the requirements of Section 907.6.3.1.*

907.2.3.5 Monitoring. *School fire alarm systems shall be monitored in accordance with Section ~~907.6.5.2~~ 907.6.6.2.*

907.2.3.6 Automatic fire alarm system. *Automatic detection shall be provided in accordance with this section.*

907.2.3.6.1 Smoke detectors. *Smoke detectors shall be installed at the ceiling of every room and in "ceiling-plenums" utilized for environmental air. Where the ceiling is attached directly to the underside of the roof structure, smoke detectors shall be installed on the ceiling only.*

Exception: *Where the environment or ambient conditions exceed smoke detector installation guidelines; heat detectors or fire sprinklers shall be used.*

907.2.3.6.2 Heat detectors. *Heat detectors shall be installed in combustible spaces where sprinklers or smoke detectors are not installed.*

907.2.3.7 Private schools. *An automatic fire alarm system shall be provided in new buildings of private schools.*

Exception: *Automatic detection devices are not required where an approved automatic sprinkler system is installed in accordance with Section 903.3.1.1 and the occupant notification appliances will activate on sprinkler water flow and manual activation is provided from a normally occupied location.*

907.2.3.8 Day-care, Group E.

907.2.3.8.1 *An automatic fire alarm system shall be provided in all buildings used as or containing a Group E day-care.*

Exception: *Automatic detection devices are not required where an approved automatic sprinkler system is installed in accordance with Section 903.3.1.1 and the occupant notification appliances will activate on sprinkler water flow and manual activation is provided from a normally occupied location.*

907.2.3.8.2 *Smoke detectors shall be installed in every room used for sleeping or napping.*

907.2.5 Group H. A manual fire alarm system that activates the occupant notification system in accordance with Section 907.5 shall be installed in Group H-5 occupancies and in occupancies used for the manufacture of organic coatings. An automatic smoke detection system shall be installed for highly toxic gases, organic peroxides and oxidizers in accordance with Chapters 60, 62 and 63, respectively, of the *~~International~~California Fire Code.*

907.2.5.1 Group H occupancies located above the 10th story. *Manual fire alarm boxes shall be required on each side of the 2-hour fire-smoke barrier and at each exit above the 10th story.*

907.2.6 Group I. A manual fire alarm system that activates the occupant notification system in accordance with Section 907.5 shall be installed in Group I occupancies. An automatic smoke detection system that activates the occupant notification system in accordance with Section 907.5 shall be provided in accordance with Sections 907.2.6.1, 907.2.6.2 and 907.2.6.3.3.

Exceptions:
~~1. Manual fire alarm boxes in sleeping units of Group I-1 and I-2 occupancies shall not be required at exits if located at all care providers' control stations or other constantly attended staff locations, provided such stations are visible and continuously accessible and that the distances of travel required in Section 907.4.2.1 are not exceeded.~~
1. *Large family day-care.*
2. Occupant notification systems are not required to be activated where private mode signaling installed in accordance with NFPA 72 is approved by the fire code official and staff evacuation responsibilities are included in the fire safety and evacuation plan required by Section 404 of the ~~*International*~~*California* Fire Code.

907.2.6.1 Group I-1. *Reserved.* ~~In Group I-1 occupancies, an automatic smoke detection system shall be installed in *corridors*, waiting areas open to *corridors* and *habitable spaces* other than *sleeping units* and kitchens. The system shall be activated in accordance with Section 907.5.~~

~~**Exceptions:**~~
~~1. For Group I-1 Condition 1 occupancies, smoke detection in *habitable spaces* is not required where the facility is equipped throughout with an *automatic sprinkler system* installed in accordance with Section 903.3.1.1.~~
~~2. Smoke detection is not required for exterior balconies.~~

~~**[F] 907.2.6.1.1 Smoke alarms.** Single- and multiple- station smoke alarms shall be installed in accordance with Section 907.2.11.~~

907.2.6.2 Group I-2 *and Group I-2.1.* ~~An automatic smoke detection system shall be installed in corridors in Group I-2 Condition 1 facilities and spaces permitted to be open to the corridors by Section 407.2. The system shall be activated in accordance with Section 907.4. Group I-2 Condition 2 occupancies shall be equipped with an automatic smoke detection system as required in Section 407.~~
~~**Exceptions:**~~
~~1. Corridor smoke detection is not required in smoke compartments that contain sleeping units where such units are provided with smoke detectors that comply with UL 268. Such detectors shall provide a visual display on the *corridor* side of each *sleeping unit* and shall provide an audible and visual alarm at the care providers' station attending each unit.~~
~~2. Corridor smoke detection is not required in smoke compartments that contain sleeping units where *sleeping unit* doors are equipped with automatic door closing devices with integral smoke detectors on the unit sides installed in accordance with their listing, provided that the integral detectors perform the required alerting function.~~
A manual and automatic fire alarm system shall be installed in Group I-2 and I-2.1 occupancies. Where automatic fire suppression systems or smoke detectors are installed, such systems or detectors shall be connected to the building fire alarm system.

Exception: *Where an entire facility is used for the housing of persons, none of whom are physically or mentally handicapped or nonambulatory, and are between the ages of 18 and 64, the buildings or structures comprising such facility shall be exempt from the provisions of this subsection relating to the installation of an automatic fire alarm system.*

907.2.6.2.1 Notification. *The fire alarm notification system shall be in accordance with Section 907.5.2.5.*

907.2.6.2.2 Automatic fire detection. *Smoke detectors shall be provided in accordance with this section.*

1. In patient and client sleeping rooms. Actuation of such detectors shall cause a visual display on the corridor side of the room in which the detector is located and shall cause an audible and visual alarm at the respective nurses' station. A nurse call system listed for this function is an acceptable means of providing the audible and visual alarm at the respective nurses' station and corridor room display. Operation of the smoke detector shall not include any alarm verification feature.

Exception: *In patient and client rooms equipped with existing automatic door closers having integral smoke detector, the integral detector is allowed to substitute for the room smoke detector, provided it meets all the required alerting functions.*

2. Group I-2 nurses' stations. A minimum of one (1) smoke detector shall be installed at the nurses' station and centrally located.
3. In waiting areas and corridors onto which they open, in the same smoke compartment, in accordance with Section 407.2.1.

907.2.6.3 Group I-3 occupancies. Group I-3 occupancies shall be equipped with a manual fire alarm system and automatic smoke detection system installed for alerting staff.

Exception: *An automatic smoke detection system is not required within temporary holding cells.*

907.2.6.3.3 Automatic smoke detection system. An automatic smoke detection system shall be installed throughout resident housing areas, including sleeping units and contiguous day rooms, group activity spaces and other common spaces normally accessible to ~~residents~~*inmates*.

Exceptions:
1. Other approved smoke detection arrangements ~~providing equivalent protection including, but not limited to, placing detectors in exhaust ducts from cells or behind protective guards listed for the purpose, are allowed when necessary to prevent damage or tampering.~~ *may be used to prevent damage or tampering or for other purposes provided the function of detecting any fire is fulfilled and the location of the detectors is such that the speed of detection will be equivalent to that provided by the spacing and location required in accordance with NFPA 72 as referenced in Chapter 35. This may include the location of detectors in return air ducts from cells, behind grilles or in other locations. Spot type, combination duct and open area smoke detectors may be used when located not more than 14 inches (356mm) from the return air grill. For initiation and annunciation purposes, these detectors may be combined in groups of four. The fire code official having jurisdiction, however, must approve the proposed equivalent performance of the design.*
~~2. Sleeping units in Use Conditions 2 and 3 as described in Section 308.~~
~~3. Smoke detectors are not required in sleeping units with four or fewer occupants in smoke compartments that are equipped throughout with an *automatic sprinkler system* installed in accordance with Section 903.3.1.1.~~
2. For detention housing and/or mental health housing area(s), including correctional medical and mental health uses, automatic smoke detection system in sleeping units shall not be required when all of the following conditions are met:

2.1. All rooms, including the inmate cells are provided with an automatic sprinkler system in accordance with Section 903.3.1.1.
2.2. Building is continuously staffed by a correctional officer at all times.
~~*2.3. The exception to Section 903.2.6.2 shall not apply.*~~

3. Smoke detectors are not required to be installed in inmate cells with 2 or fewer occupants in detention facilities which do not have a correctional medical and mental health use.
4. Smoke detectors are not required to be installed in inmate day rooms of detention facilities where 24 hour direct visual supervision is provided by a correctional officer(s) and a manual fire alarm box is located in the control room.

907.2.6.3.4 System annunciation. *A staff alerting fire alarm shall sound at all staff control stations on the floor of activation and an audible and visual signal shall be indicated on an annunciator at the facility control center upon activation of any automatic extinguishing system, automatic detection system, or any smoke detector or manual actuating or initiating device. In addition, where there are staff-control stations on the floor, an audible, visual and manual alarm shall be located in each staff control station.*

Fire and trouble signals of fire alarm systems and sprinkler water-flow and supervisory signals of extinguishing systems shall be annunciated in an area designated as the facility control center which shall be constantly attended by staff personnel. All such signals shall produce both an audible signal and visual display at the facility control center indicating the building, floor zone or other designated area from which the signal originated in accordance with Section 907.6.3.

All local detention facilities within the scope of Section 6031.4 of the Penal Code shall have a automatic smoke detection system. A manual fire alarm-initiating device shall be installed in all guard control stations and shall be capable of alerting personnel in a central control point to the presence of fire or smoke within the facility.

907.2.9 Group R-2 *and R-2.1*. Fire alarm systems and smoke alarms shall be installed in Group R-2 *and R-2.1* occupancies as required in Sections 907.2.9.1 through ~~*907.2.9.3*~~ *907.2.9.4.*

907.2.9.1 Manual fire alarm system. A manual fire alarm system that activates the occupant notification system in accordance with Section 907.5 shall be installed in Group R-2 occupancies where any of the following conditions apply:

1. Any dwelling unit or sleeping unit is located three or more stories above the lowest level of exit discharge.
2. Any dwelling unit or sleeping unit is located more than one story below the highest level of exit discharge of exits serving the dwelling unit or sleeping unit.
3. The building contains more than 16 dwelling units or sleeping units.
4. *Congregate residences with more than 16 occupants.*

Exceptions:
1. A fire alarm system is not required in buildings not more than two stories in height where all dwelling units or sleeping units and contiguous attic and crawl spaces are separated from each other and public or common areas by not less than 1-hour fire partitions and each dwelling unit or sleeping unit has an exit directly to a public way, egress court or yard.
2. Manual fire alarm boxes are not required where the building is equipped throughout with an automatic sprinkler system installed in accordance with Section 903.3.1.1 or 903.3.1.2 and the occupant notification appliances will automatically activate throughout the notification zones upon a sprinkler water flow.
3. A fire alarm system is not required in buildings that do not have interior corridors serving dwelling units and are protected by an approved automatic sprinkler system installed in accordance with Section 903.3.1.1 or 903.3.1.2, provided that dwelling units either have a means of egress door opening directly to an exterior exit access that leads directly to the exits or are served by open-ended corridors designed in accordance with Section 1027.6, Exception 3.

907.2.9.4 Licensed Group R-2.1 occupancies. *Licensed Group R-2.1 occupancies housing more than six nonambulatory, elderly clients shall be provided with an approved manual and automatic fire alarm system.*

Exceptions: *Buildings housing nonambulatory clients on the first story only and which are protected throughout by the following:*
1. An approved and supervised automatic sprinkler system, as specified in Sections 903.3.1.1 or 903.3.1.2, which upon activation will initiate the fire alarm system to notify all occupants.
2. A manual fire alarm system.
3. Smoke alarms required by Section 907.2.11.

907.2.9.4.1 Smoke alarms. *Single- and multiple-station smoke alarms shall be installed in accordance with Section 907.2.11.*

907.2.11 Single- and multiple-station smoke alarms. Listed single- and multiple-station smoke alarms complying with UL 217 shall be installed in accordance with Sections 907.2.11.1 through ~~*907.2.11.4*~~*907.2.11.8* and NFPA 72.

Exception: *For Group R occupancies. A fire alarm system with smoke detectors located in accordance with this section may be installed in lieu of smoke alarms. Upon actuation of the detector, only those notification appliances in the dwelling unit or guest room where the detector is actuated shall activate.*

907.2.11.1.1 Group R-1. Single- or multiple-station smoke alarms shall be installed in all of the following locations in Group R-1:

1. In sleeping areas.
2. In every room in the path of the means of egress from the sleeping area to the door leading from the sleeping unit.
3. In each story within the sleeping unit, including basements. For sleeping units with split levels and without an intervening door between the adjacent levels, a smoke alarm installed on the upper level shall suffice for the adjacent lower level provided that the lower level is less than one full story below the upper level.

See Section ~~907.2.11.5~~907.2.11.8 for specific location requirements.

907.2.11.2 Groups R-2, *R-2.1*, R-3, *R-3.1*$_T$ *and* R-4. Single- or multiple-station smoke alarms shall be installed and maintained in Groups R-2, *R-2.1*, R-3, *R-3.1*$_T$ *and* R-4 regardless of occupant load at all of the following locations:

1. On the ceiling or wall outside of each separate sleeping area in the immediate vicinity of bedrooms.
2. In each room used for sleeping purposes.
3. In each story within a dwelling unit, including basements but not including crawl spaces and uninhabitable attics. In dwellings or dwelling units with split levels and without an intervening door between the adjacent levels, a smoke alarm installed on the upper level shall suffice for the adjacent lower level provided that the lower level is less than one full story below the upper level.
4. *In a Group R-3.1 occupancies, in addition to the above, smoke alarms shall be provided throughout the habitable areas of the dwelling unit except kitchens.*

See Section ~~907.2.11.5~~907.2.11.8 for specific location requirements.

907.2.11.2.1 Group I-4 occupancies. *Large family day-care homes shall be equipped with State Fire Marshal approved and listed single station residential type smoke alarms.*

907.2.11.2.2 Group R-3.1. *In all facilities housing a bedridden client, smoke alarms shall receive their primary power from the building wiring when such wiring is served from a commercial source and shall be equipped with a battery backup. Smoke alarms shall be electrically interconnected so as to cause all smoke alarms to sound a distinctive alarm signal upon actuation of any single smoke alarm. Such alarm signal shall be audible throughout the facility at a minimal level of 15 db above ambient noise level. These devices need not be interconnected to any other fire alarm device, have a control panel, or be electrically supervised or provided with emergency power.*

907.2.11.2.3 Smoke alarms. *Smoke alarms shall be tested and maintained in accordance with the manufacturer's instructions. Smoke alarms that no longer function shall be replaced.*

907.2.11.5 Interconnection. Where more than one smoke alarm is required to be installed within an individual dwelling unit or sleeping unit in Group R ~~or I-1~~ occupancies, the smoke alarms shall be interconnected in such a manner that the activation of one alarm will activate all of the alarms in the individual unit. Physical interconnection of smoke alarms shall not be required where listed wireless alarms are installed and all alarms sound upon activation of one alarm. The alarm shall be clearly audible in all bedrooms over background noise levels with all intervening doors closed.

907.2.11.6 Power source. In new construction *and in newly classified Group R-3.1 occupancies,* required smoke alarms shall receive their primary power from the building wiring where such wiring is served from a commercial source and shall be equipped with a battery backup. Smoke alarms with integral strobes that are not equipped with battery backup shall be connected to an emergency electrical system in accordance with Section 2702. Smoke alarms shall emit a signal when the batteries are low. Wiring shall be permanent and without a disconnecting switch other than as required for overcurrent protection.
Exception: Smoke alarms are not required to be equipped with battery backup where they are connected to an emergency electrical system that complies with Section 2702.

~~907.2.11.5~~ 907.2.11.8 Specific location requirements.
Extract from NFPA 72 Section 29.8.3.4 Specific Location Requirements.*
This extract has been provided by NFPA as amended by the Office of the State Fire Marshal and adopted by reference as follows:

29.8.3.4 Specific Location Requirements. *The installation of smoke alarms and smoke detectors shall comply with the following requirements:*

(1) Smoke alarms and smoke detectors shall not be located where ambient conditions, including humidity and temperature, are outside the limits specified by the manufacturer's published instructions.
(2) Smoke alarms and smoke detectors shall not be located within unfinished attics or garages or in other spaces where temperatures can fall below 40°F (4°C) or exceed 100°F (38°C).

(3) Where the mounting surface could become considerably warmer or cooler than the room, such as a poorly insulated ceiling below an unfinished attic or an exterior wall, smoke alarms and smoke detectors shall be mounted on an inside wall.
(4) Smoke alarms or smoke detectors shall be installed a minimum of 20 feet horizontal distance from a permanently installed cooking appliance.

Exception: *Ionization smoke alarms with an alarm-silencing switch or Photoelectric smoke alarms shall be permitted to be installed 10 feet (3 m) or greater from a permanently installed cooking appliance.*
Photoelectric smoke alarms shall be permitted to be installed greater than 6 feet (1.8 m) from a permanently installed cooking appliance where the kitchen or cooking area and adjacent spaces have no clear interior partitions and the 10 ft distances would prohibit the placement of a smoke alarm or smoke detector required by other sections of the code.
Smoke alarms listed for use in close proximity to a permanently installed cooking appliance.

(5) Effective January 1, 2016, smoke alarms and smoke detectors used in household fire alarm systems installed between 6 ft (1.8 m) and 20 ft (6.1 m) along a horizontal flow path from a stationary or fixed cooking appliance shall be listed for resistance to common nuisance sources from cooking.
(6) Installation near bathrooms. Smoke alarms shall be installed not less than a 3-foot (0.91 m) horizontal distance from the door or opening of a bathroom that contains a bathtub or shower unless this would prevent placement of a smoke alarm required by other sections of the code.
(7) Smoke alarms and smoke detectors shall not be installed within a 36 in. (910 mm) horizontal path from the supply registers of a forced air heating or cooling system and shall be installed outside of the direct airflow from those registers.
(8) Smoke alarms and smoke detectors shall not be installed within a 36 in. (910 mm) horizontal path from the tip of the blade of a ceiling-suspended (paddle) fan.
(9) Where stairs lead to other occupied levels, a smoke alarm or smoke detector shall be located so that smoke rising in the stairway cannot be prevented from reaching the smoke alarm or smoke detector by an intervening door or obstruction.
(10) For stairways leading up from a basement, smoke alarms or smoke detectors shall be located on the basement ceiling near the entry to the stairs.
(11) For tray-shaped ceilings (coffered ceilings), smoke alarms and smoke detectors shall be installed on the highest portion of the ceiling or on the sloped portion of the ceiling within 12 in. (300 mm) vertically down from the highest point.
(12) Smoke alarms and detectors installed in rooms with joists or beams shall comply with the requirements of 17.7.3.2.4 of NFPA 72.
(13) Heat alarms and detectors installed in rooms with joists or beams shall comply with the requirements of 17.6.3 of NFPA 72.
**For additional requirements or clarification see NFPA 72.*

~~907.2.11.6~~907.2.11.9 Existing Group R Occupancies. *See the California Residential Code for existing Group R-3 occupancies or Chapter 11 of the California Fire Code for all other existing Group R occupancies.*

907.2.13 High-rise buildings *and Group I-2 occupancies having occupied floors located more than 75 feet above the lowest level of fire department vehicle access.* High-rise buildings *and Group I-2 occupancies having occupied floors located more than 75 feet above the lowest level of fire department vehicle access* shall be provided with an automatic smoke detection system in accordance with Section 907.2.13.1, a fire department communication system in accordance with Section 907.2.13.2 and an emergency voice/alarm communication system in accordance with Section 907.5.2.2.

Exceptions:
1. Airport traffic control towers in accordance with Sections 412 and 907.2.22.
2. Open parking garages in accordance with Section 406.5.
3. Buildings with an occupancy in Group A-5 in accordance with Section 303.1.
4. Low-hazard special occupancies in accordance with Section 503.1.1.
5. ~~Buildings with an occupancy in Group H-1, H-2 or H-3 in accordance with Section 415.~~
~~6.~~ In Group ~~I-1 and~~ I-2, *I-2.1 and R-2.1* occupancies, the alarm shall sound at a constantly attended location and occupant notification shall be broadcast by the emergency voice/alarm communication system.

907.2.13.1 Automatic smoke detection. Automatic smoke detection in high-rise buildings *and Group I-2 occupancies having occupied floors located more than 75 feet above the lowest level of fire department vehicle access* shall be in accordance with Sections 907.2.13.1.1 and 907.2.13.1.2.

907.2.13.1.2 Duct smoke detection. *Smoke detectors listed for use in air duct systems shall be provided in accordance with this section and the California Mechanical Code. The activation of any detector required by this section shall initiate a visible and audible supervisory signal at a constantly attended location.* Duct smoke detectors complying with Section 907.3.1 shall be located as follows:

1. In the main return air and exhaust air plenum of each air-conditioning system having a capacity greater than 2,000 cubic feet per minute (cfm) (0.94 m3/s). Such detectors shall be located in a serviceable area downstream of the last duct inlet.
2. At each connection to a vertical duct or riser serving two or more stories from a return air duct or plenum of an air-conditioning system. In Group R-1 and R-2 occupancies, a smoke detector is allowed to be used in each return air riser carrying not more than 5,000 cfm (2.4 m3/s) and serving not more than 10 air-inlet openings.

907.2.13.2 Fire department communication system. Where a wired communication system is *approved* in lieu of an emergency responder radio coverage system in accordance with Section 510 of the ~~*International*~~*California Fire Code*, the wired fire department communication system shall be designed and installed in accordance with NFPA 72 and shall operate between a fire command center complying with Section 911, elevators, elevator lobbies, emergency and standby power rooms, fire pump rooms, areas of refuge and inside interior exit stairways. The fire department communication device shall be provided at each floor level within the interior exit stairway.

907.2.15 High-piled combustible storage areas. An automatic smoke detection system shall be installed throughout high-piled combustible storage areas where required by Section 3206.5 of the ~~*International*~~*California Fire Code*.

907.2.16 Aerosol storage uses. Aerosol storage rooms and general-purpose warehouses containing aerosols shall be provided with an *approved* manual fire alarm system where required by the ~~*International*~~*California Fire Code*.

907.2.24 Motion picture and television production studio sound stages and approved production facilities.

907.2.24.1 Sound stages—solid-ceiling sets and platforms. *Where required by Chapter 48 of the California Fire Code, all interior solid-ceiling sets over 600 square feet (55.7m2) in area, and platforms (when provided) over 600 square feet (55.7 m2) in area and which exceed 3 feet (914 mm) in height shall be protected by an approved heat detector system. Heat detectors shall be spaced 30 feet (9144 mm) on center or as required by the manufacturer's installation instructions. The fire alarm system shall be connected to an approved supervising station in accordance with Section 907.6.5 or a local alarm which will give an audible signal at a constantly attended location.*

907.2.24.2 Production locations—solid-ceiling sets and platforms. *Where required by Chapter 48 of the California Fire Code in buildings with existing fire protection systems and where production intends to construct solid-ceiling sets over 600 square feet (55.7 m2) in area, and platforms over 600 square feet (55.7 m2) in area and which exceed 3 feet (914 mm) in height shall be protected by an approved heat detector system. Heat detectors shall be spaced 30 feet (9144 mm) on center or as required by the manufacturer's installation instructions. The fire alarm system shall be connected to an approved supervising station in accordance with Section 907.6.5 or a local alarm which will give an audible signal at a constantly attended location.*

907.2.24.3 Fire alarm control units. *Fire alarm control units shall be California State Fire Marshal listed and shall be utilized in accordance with their listing. Control units are permitted to be temporarily supported by sets, platforms or pedestals.*

907.2.24.4 Heat detectors.

907.2.24.4.1 *Heat detection required by this section shall be defined as a portable system as it is intended to be reinstalled when platforms or sets are changed.*

907.2.24.4.2 *Heat detectors shall be secured to standard outlet boxes and are allowed to be temporarily supported by sets, platforms or pedestals.*

907.2.24.4.3 *Heat detectors shall be provided for solid-ceiling sets and platforms where required by Sections 4805.3 and 4811.14.*

907.2.25 Group C occupancies (organized camps).

907.2.25.1 General. *Every building and structure used or intended for sleeping purposes shall be provided with an automatic smoke-detection system.*

Exceptions:
1. Buildings and structures in existence and in operation prior to January 1, 1985.
2. Tents, tent structures and buildings and structures that do not exceed 25 ft (7620 mm) in any lateral dimensions and where such building or structure is not more than one story.

907.2.25.2 Camp fire alarm. *Every organized camp shall provide and maintain audible appliances, or devices suitable for sounding a fire alarm. Such audible appliances or devices may be of any type acceptable to the enforcing agency provided they are distinctive in tone from all other signaling devices or systems and shall be audible throughout the camp premises. When an automatic fire alarm system is provided, as required by Section ~~440.6.6~~450.6.6 of the California Building Code, all audible appliances required by this section shall be of the same type as that used in the automatic system.*

907.2.26.1 General. *Every fixed guideway transit station shall be provided with an approved emergency voice/alarm communication system in accordance with NFPA 72. The emergency voice/alarm communication system, designed and installed so that damage to any one speaker will not render any paging zone of the system inoperative.*

Exception: *Open stations*

907.2.26.2 System components. *Each station fire alarm system shall consist of:*

1. Fire alarm control unit at a location as permitted by the enforcing agency.
2. An alarm annunciator(s). The annunciator(s) shall be located at a point acceptable to the enforcing agency. The annunciator(s) shall indicate the type of device and general location of alarm. All alarm, supervisory and trouble signals shall be transmitted to the local annunciator(s) and the operations control center.
3. Manual fire alarm boxes shall be provided throughout passenger platforms and stations.

Exception: *Two-way emergency communication reporting devices (emergency telephones) are allowed to be used in lieu of manual fire alarm boxes as permitted by the enforcing agency. Such devices shall provide two-way communication between the operations control center and each device. Such devices shall be located as required for manual fire alarm boxes, and shall be distinctly identified by signs, coloring or other means acceptable to the enforcing agency.*

4. Automatic smoke detectors in all ancillary spaces.

Exceptions:
1. Ancillary spaces protected by an approved fixed automatic extinguishing system; or
2. Ancillary spaces protected by quickresponse sprinklers.
5. Automatic control of exiting components.

907.2.26.3 Emergency voice/alarm communication system. *Each station shall be provided with a an emergency voice/alarm communication system capable of transmitting voice , recorded or electronically generated textual messages to all areas of the station. The system(s) shall be configured such that the messages can be initiated from either the Emergency Management Panel (EMP) or the operations control center.*

907.2.26.4 Emergency telephones. *A dedicated two-way emergency communication phone system designed and installed in accordance with NFPA 72 shall be provided in all underground stations to facilitate direct communications for emergency response between remote locations and the EMP.*

907.2.26.4.1 *Remote emergency phones shall be located at ends of station platforms, each hose outlet connection and station valve rooms.*

907.2.26.4.2 *Provisions shall be made in the design of this two-way emergency communication phone system for extensions of the system to the next passenger station or guideway portal.*

907.2.27 Winery caves. *An approved manual fire alarm system conforming to the provisions of Section 907.2 shall be provided in all Type 3 winery caves.*

907.2.28 Group L. *A manual fire alarm system shall be installed throughout buildings containing Group L occupancies. When Group L occupancies are located in mixed use buildings, at least one manual fire alarm shall be located in the Group L occupancy.*

907.2.28.1 Group L occupancies located above the 10th story. *Manual fire alarm boxes shall be required on each side of the 2-hour fire-smoke barrier and at each exit above the 10th story.*

907.2.29 Public school state funded construction projects for kindergarten through 12th grade — automatic fire alarm system requirements.

907.2.29.1 New public school campus. *An automatic fire alarm system shall be provided in all occupancies that activates the occupant notification system signal utilizing an emergency voice/alarm communication system meeting the requirements of Section 907.5.2.2 and installed in accordance with Section 907.6. The provisions of this section shall apply to any public school project consisting of one or more buildings on a new school campus and receiving state funds pursuant to Leroy F. Greene School Facilities Act of 1998, California Education Code sections 17070.10 through 17079. For purposes of this section, new campus refers to a school site, where an application for construction of original buildings was made to DSA on or after July 1, 2002.*

Exceptions:
1. A relocatable building that is sited with the intent that it be at the site for less than three years and is sited upon a temporary foundation in a manner that is designed to permit easy removal. Also see CCR, Title 24, Part 1, California Administrative Code, Section 4-314 for definition of relocatable building.
2. Detached buildings designed and used for non-instructional purposes that meet the applicable requirements for that occupancy. Buildings would include, but not be limited to:

Concession Stand
Press Box
Restroom Facilities
Shade Structure
Snack Bar
Storage Building
Ticket Booth

3. Emergency voice/alarm communication systems meeting the requirements of Section 907.5.2.2 and installed in accordance with Section 907.6 shall not be required in Group E occupancies with occupant loads of 100 or less, provided that activation of the manual fire alarm system initiates an approved occupant notification signal in accordance with Section 907.5.

907.2.29.2 New building on an existing public school campus. *An automatic fire alarm system shall be provided in all occupancies. The provisions of this section shall apply to any public school project construction of a new building on an existing campus and receiving state funds pursuant to Leroy F. Green, School Facilities Act of 1998, California Education Code sections 17070.10 through 17079. For purposes of this section, an existing campus refers to a school site, where an application for construction of original buildings was made to DSA prior to July 1, 2002.*

Exceptions:
1. A construction project that has an estimated total cost of less than $200,000.
2. A relocatable building that is sited with the intent that it be at the site for less than three years and is sited upon a temporary foundation in a manner that is designed to permit easy removal. See California Administrative Code, Section 4-314 for definition of relocatable building.
3. Detached buildings designed and used for non-instructional purposes that meet the applicable requirements for that occupancy. Buildings would include, but not be limited to:

Concession Stand

Press Box
Restroom Facilities
Shade Structure
Snack Bar
Storage Building
Ticket Booth

907.2.29.3 Alterations to existing buildings on an existing public school campus. *An automatic fire alarm system shall be provided for all portions within the scope of an alteration project. The provisions of this section shall apply to any public school project on an existing campus and receiving state funds pursuant to Leroy F. Green, School Facilities Act of 1998, California Education Code sections 17070.10 through 17079. For purposes of this section, an existing campus refers to a school site, where an application for construction of original buildings was made to DSA prior to July 1, 2002.*

Exceptions:
1. A construction project that has an estimated total cost of less than $200,000.
2. A relocatable building that is sited with the intent that it be at the site for less than three years and is sited upon a temporary foundation in a manner that is designed to permit easy removal. See California Administrative Code, Section 4-314 for definition of relocatable building.
3. Detached buildings designed and used for non-instructional purposes that meet the applicable requirements for that occupancy. Buildings would include, but not be limited to:

Concession Stand
Press Box
Restroom Facilities
Shade Structure
Snack Bar
Storage Building
Ticket Booth

907.2.29.4 Day-care, Group E or Group I-4 located on a public school campus. *An automatic fire alarm system shall be provided in all buildings used as or containing a Group E or Group I-4 day-care.*

907.3 Fire safety functions. Automatic fire detectors utilized for the purpose of performing fire safety functions shall be connected to the building's fire alarm control unit where a fire alarm system is ~~required by Section 907.2~~*installed*. Detectors shall, upon actuation, perform the intended function and activate the alarm notification appliances or activate a visible and audible supervisory signal at a constantly attended location. In buildings not equipped with a fire alarm system, the automatic fire detector shall be powered by normal electrical service and, upon actuation, perform the intended function. The detectors shall be located in accordance with NFPA 72.

907.3.1 Duct smoke detectors. Smoke detectors installed in ducts shall be listed for the air velocity, temperature and humidity present in the duct. Duct smoke detectors shall be connected to the building's fire alarm control unit when a fire alarm system is required by section 907.2. Activation of a duct smoke detector shall initiate a visible and audible supervisory signal at a constantly attended location and shall perform the intended fire safety function in accordance with this code and the ~~International~~*California Mechanical Code*. In facilities that are required to be monitored by a supervising station, duct smoke detectors shall report only as a supervisory signal and not as a fire alarm. They shall not be used as a substitute for required open area detection.

Exceptions:
1. The supervisory signal at a constantly attended location is not required where duct smoke detectors activate the building's alarm notification appliances.
2. In occupancies not required to be equipped with a fire alarm system, actuation of a smoke detector shall activate a visible and an audible signal in an approved location. Smoke detector trouble conditions shall activate a visible or audible signal in an approved location and shall be identified as air duct detector trouble.

907.3.2 Delayed egress locks. Where delayed egress locks *or devices* are installed on means of egress doors in accordance with Section 1010.1.9.7, an automatic smoke~~ or heat~~ *detection* system shall be installed as required by that section *and Section 1010.1.9.7.*

907.3.2.1 *In other than Groups I, R-2.1 and R-4 occupancies for single-story building, smoke detectors shall be installed at ceilings throughout all occupied areas and mechanical/electrical spaces. For multiple-story buildings, smoke detectors shall be installed throughout all occupied areas and mechanical/electrical spaces for the story where delayed egress devices are installed. Additional detectors are required on adjacent stories where occupants of those stories utilize the same means of egress.*

Exception: *Refer to Section 907.3.2.4 for Group A courthouse occupancies.*

907.3.2.2 For Group I and R-2.1 occupancies. *Smoke detectors shall be installed at ceilings throughout all occupied areas and mechanical/electrical spaces of smoke-compartments where delayed egress devices are installed. Additional detectors are required in adjacent smoke-compartments where occupants of those compartments utilize the same means of egress.*

907.3.2.3 For Group R-4. *Occupancies licensed as residential care facilities for the elderly, and housing clients with Alzheimer's disease or dementia residential facilities, smoke detectors shall be installed at ceilings throughout all occupiable rooms and areas and mechanical/ electrical rooms and spaces.*

907.3.2.4 For Group A Courthouse occupancies. *Approved automatic smoke detection system shall be installed at ceilings in all occupied corridors and mechanical/electrical spaces of smoke-compartments where delayed egress devices are installed.*

907.3.3 Elevator emergency operation. Automatic fire detectors installed for elevator emergency operation shall be installed in accordance with the provisions of ~~ASME A17.1~~*California Code of Regulations, Title 8, Division 1, Chapter 4, Subchapter 6, Elevator Safety Orders* and NFPA 72.

907.4.2.1 Location. Manual fire alarm boxes shall be located not more than 5 feet (1524 mm) from the entrance to each exit. In buildings not protected by an automatic sprinkler system in accordance with Section 903.3.1.1 or 903.3.1.2, additional manual fire alarm boxes shall be located so that the exit access travel distance to the nearest box does not exceed 200 feet (60 960 mm).

Exception: *When individual dwelling units are served by a single exit stairway, additional boxes at other than the ground floor may be omitted.*

907.4.2.7 Operation. *Manual fire alarm boxes shall be operable with one hand including boxes with protective covers.*

907.5.2.1.3 Audible alarm signal. *The audible signal shall be the standard fire alarm evacuation signal, ANSI S3.41 Audible Emergency Evacuation Signal, "three pulse temporal pattern," as described in NFPA 72.*

Exception: *The use of the existing evacuation signaling scheme shall be permitted where approved by the enforcing agency.*

907.5.2.2 Emergency voice/alarm communication systems. Emergency voice/alarm communication systems required by this code shall be designed and installed in accordance with NFPA 72. The operation of any automatic fire detector, sprinkler waterflow device or manual fire alarm box shall automatically sound an alert tone followed by voice instructions giving approved information and directions for a general or staged evacuation in accordance with the building's fire safety and evacuation plans required by Section 404 of the ~~*International*~~*California Fire Code.* In high-rise buildings *and Group I-2 occupancies having occupied floors located more than 75 feet above the lowest level of fire department vehicle access,* the system shall operate on at least the alarming floor, the floor above and the floor below. Speakers shall be provided throughout the building by paging zones. At a minimum, paging zones shall be provided as follows:

1. Elevator groups.
2. Interior exit stairways.
3. Each floor.
4. Areas of refuge as defined in Chapter 2.

Exception: In Group ~~I-1 and~~ I-2, *I-2.1 and R-2.1* occupancies, the alarm shall sound in a constantly attended area and a general occupant notification shall be broadcast over the overhead page.

907.5.2.3.1 Public use areas and common use areas. Visible alarm notification appliances shall be provided in public use areas and common use areas, *including but not limited to:*

~~4~~1. Band rooms
~~11~~2. Classrooms
~~2~~3. Corridors
~~5~~4. Gymnasiums
~~9~~5. Lobbies
~~10~~6. Meeting rooms
~~6~~7. Multipurpose rooms
~~3~~8. Music practice rooms
~~7~~9. Occupational shops
~~8~~10. Occupied rooms where ambient noise impairs hearing of the fire alarm
11. Sanitary facilities including restrooms, bathrooms and shower rooms

Exception: Where employee work areas have audible alarm coverage, the notification appliance circuits serving the employee work areas shall be initially designed with not less than 20- percent spare capacity to account for the potential of adding visible notification appliances in the future to accommodate hearing-impaired employee(s).

907.5.2.3.2 Groups ~~I-1 and~~ R-1 *and R-2.1*. Group ~~I-1 and~~ R-1 *and R-2.1* dwelling units or sleeping units in accordance with Table 907.5.2.3.2 shall be provided with a visible alarm notification appliance, activated by both the in-room smoke alarm and the building fire alarm system.

TABLE 907.5.2.3.2
VISIBLE ALARMS

NUMBER OF SLEEPING UNITS	SLEEPING ACCOMMODATIONS WITH VISIBLE ALARMS
6 to 25	2
26 to 50	4
51 to 75	7
76 to 100	9
101 to 150	12
151 to 200	14
201 to 300	17
301 to 400	20
401 to 500	22
501 to 1,000	5% of total
1,001 and over	50 plus 3 for each 100 over 1,000

[SFM] Also see Chapter 11B.

907.5.2.3.3 Group R-2. In Group R-2 occupancies required by Section 907 to have a fire alarm system, all dwelling units and sleeping units shall be provided with the capability to support visible alarm notification appliances in accordance with ~~Chapter 10 of ICC A117.1~~*NFPA 72*. Such capability shall be permitted to include the potential for future interconnection of the building fire alarm system with the unit smoke alarms, replacement of audible appliances with combination audible/visible appliances, or future extension of the existing wiring from the unit smoke alarm locations to required locations for visible appliances.

~~907.5.2.3.5~~907.5.2.3.4 ***Groups R-2.1, R-3.1 and R-4.*** *Protective social care facilities which house persons who are hearing impaired, shall be provided with notification appliances for the hearing impaired installed in accordance with NFPA 72 and which shall activated upon initiation of the fire alarm system or the smoke alarms.*

907.5.2.4 Group E Schools. *One audible alarm notification appliance shall be mounted on the exterior of a building to alert occupants at each playground area.*

907.5.2.5 Groups I-2 and I-2.1. *Audible appliances shall be used in nonpatient areas. Visible appliances are allowed to be used in lieu of audible appliances in patient occupied areas. Audible appliances located in patient areas shall be only chimes or similar sounding appliances for alerting staff.*

In occupancies housing nonambulatory persons where restraint is practiced, staff and attendants shall be provided and housed or located in such a manner that such supervisory personnel will also be alerted upon activation of the fire alarm system or any detector required by this section.

907.6.1 Wiring. Wiring shall comply with the requirements of ~~NFPA 70~~*California Electrical Code* and NFPA 72. Wireless protection systems utilizing radio-frequency transmitting devices shall comply with the special requirements for supervision of low-power wireless systems in NFPA 72.

907.6.1.1 High-rise Buildings. *Wiring for fire alarm signaling line circuits, initiating circuits, and notification circuits in high-rise buildings shall be in accordance with the following:*

1. Class A in accordance with NFPA 72.

Exception: *Initiating circuits which serve only a single initiating device.*

2. Enclosed in continuous metallic raceways in accordance with the California Electrical Code.

Exception: *Metallic cable (MC) shall be permitted for fire alarm notification circuits where continuous metallic raceways are not required for survivability.*

907.6.4 Zones. *Fire alarm systems shall be divided into zones where required by this section. For the purposes of annunciation and notification, zoning shall be in accordance with the following:*

1. Where the fire-protective signaling system serves more than one building, each building shall be considered as a separate zone.
2. Each floor of a building shall be considered as a separate zone.
3. Each section of floor of a building that is separated by fire walls or by horizontal exits shall be considered as a separate zone.
4. Each ~~floor shall be zoned separately and a~~ zone shall not exceed 22,500 square feet (2090 m2). The length of any zone shall not exceed 300 feet (91 440 mm) in any direction.

Exception: Automatic sprinkler system zones shall not exceed the area permitted by NFPA 13.

5. For Group I-3 occupancies each cell complex shall be considered a separate zone.
6. For Group H and L occupancies above the 10th story, each side of the 2-hour fire-smoke barrier shall be considered a separate zone.
7. Annunciation shall be further divided into zones where deemed necessary by the enforcing agency.

~~907.6.3.1~~907.6.4.1 ***Annunciation.*** *Alarm, supervisory and trouble signals shall be annunciated in the main control unit by means of an audible signal and a visual display in accordance with NFPA 72. Identification of the type of alarm and supervisory initiating devices, such as manual, automatic, sprinkler waterflow, sprinkler valve supervisory, fire-pump supervisory, etc., shall be separately indicated.*

Exception: *Group R-3 occupancies.*

~~907.6.4.1~~907.6.4.1.1 ~~Zoning indicator~~ ***Annunciator*** **panel.** A ~~Zoning indicator~~ *annunciator* panel *complying with Section* ~~907.6.3.1~~907.6.4.1 and the associated controls shall be provided in an approved *remote* location *where*

deemed necessary by the enforcing agency. The visual zone indication shall lock in until the system is reset and shall not be canceled by the operation of an audible alarm-silencing switch.

907.6.4.2 High-rise buildings. In high-rise buildings *and Group I-2 occupancies having occupied floors located more than 75 feet above the lowest level of fire department vehicle access,* a separate zone by floor shall be provided for each of the following types of alarm-initiating devices where provided:

1. Smoke detectors
2. Sprinkler waterflow devices
3. Manual fire alarm boxes
4. Other approved types of automatic fire detection devices or suppression systems

~~907.6.3.3~~*907.6.4.3* ***High-Rise Buildings Zoning Annunciator Panel*** *– In high-rise buildings, a zoning annunciator panel shall be provided in the Fire Command Center. This panel shall not be combined with the Firefighter Smoke Control Panel unless approved. Panel shall be in matrix format or an approved equivalent configuration. All indicators shall be based upon positive confirmation. The panel shall include the following features at a minimum:*

1. Fire alarm initiating devices with individual annunciation per floor for manual fire alarm boxes, area smoke detectors, elevator lobby smoke detectors, duct smoke detectors, heat detectors, auxiliary alarms, and sprinkler waterflow. (Red LED)
2. Sprinkler and standpipe system control valves per floor - supervisory. (Yellow LED)
3. Common fire alarm system trouble. (Yellow LED)
4. Annunciation Panel Power On. (Green LED)
5. Lamp test. (Push Button)

~~907.6.3.4~~*907.6.4.4* ***Notification zoning.*** *Upon activation of initiating devices where occupant notification is required for evacuation, all notification zones shall operate simultaneously throughout the building.*

Exceptions:
1. High-rise buildings as permitted in Section 907.2.13,
2. Hospitals and convalescent facilities with staff alerting notification appliances or emergency voice/alarm communication, zoning shall be in accordance with the approved fire plan.
3. Detention facilities.
4. Upon approval by the fire code official in buildings which are sprinklered throughout, specific notification zoning shall be permitted where the notification zones are separated by a minimum of a 2-hour fire barrier and 2-hour fire-resistive floor assembly. The system shall have the capability to activate all other notification zones by automatic and manual means.
5. Upon approval by the fire code official in buildings which are sprinklered throughout, specific notification zoning shall be permitted where the activated initiating device or fire extinguishing system is separated from any nonactive notification zones by a minimum of 300 ft horizontal distance. The system shall have the capability to activate all other notification zones by automatic and manual means.
6. Where a Group H or L occupancy is located above the 10th story, each side of the 2-hour fire-smoke barrier shall be considered a separate zone.

907.6.6 Monitoring. Fire alarm systems required by this chapter or by the ~~*International*~~*California Fire Code* shall be monitored by an approved supervising station in accordance with NFPA 72 *and this section.*

Exception: Monitoring by a supervising station is not required for:

1. Single- and multiple-station smoke alarms required by Section 907.2.11.
2. ~~Smoke detectors in~~ Group I-3 occupancies *shall be monitored in accordance with Section 907.2.6.3.*
3. Automatic sprinkler systems in one- and two-family dwellings.

907.6.6.2 Termination of monitoring service. Termination of fire alarm monitoring services shall be in accordance with Section 901.9 of the ~~*International*~~*California Fire Code.*

~~907.6.5.3~~*907.6.6.3* ***Group E schools.*** *Fire alarm systems shall transmit the alarm, supervisory and trouble signals to an approved supervising station in accordance with NFPA 72. The supervising station shall be listed as either UUFX (Central Station) or UUJS (remote & proprietary) by the Underwriters Laboratory Inc. (UL) or other approved listing*

and testing laboratory or shall comply with the requirements of standard, FM 3011.

907.8 Inspection, testing and maintenance. The maintenance and testing schedules and procedures for fire alarm and fire detection systems shall be in accordance with Section 907.8 of the ~~*International*~~*California Fire Code*.

908.6 Refrigerant detector. Machinery rooms shall contain a refrigerant detector with an audible and visual alarm. The detector, or a sampling tube that draws air to the detector, shall be located in an area where refrigerant from a leak will concentrate. The alarm shall be actuated at a value not greater than the corresponding TLV-TWA values for the refrigerant classification shown in the ~~*International*~~*California Mechanical Code*. Detectors and alarms shall be placed in approved locations.

908.7 Carbon dioxide (CO2) systems. Emergency alarm systems in accordance with Section 5307.5.2 of the ~~*International*~~*California* Fire Code shall be provided where required for compliance with Section 5307.5 of the ~~*International*~~*California* Fire Code.

909.1 Scope and purpose. This section applies to mechanical or passive smoke control systems where they are required by other provisions of this code. The purpose of this section is to establish minimum requirements for the design, installation and acceptance testing of smoke control systems that are intended to provide a tenable environment for the evacuation or relocation of occupants. These provisions are not intended for the preservation of contents, the timely restoration of operations or for assistance in fire suppression or overhaul activities. Smoke control systems regulated by this section serve a different purpose than the smoke- and heat-venting provisions found in Section 910. Mechanical smoke control systems shall not be considered exhaust systems under Chapter 5 of the ~~*International*~~*California Mechanical Code*.

909.10.2 Ducts. Duct materials and joints shall be capable of withstanding the probable temperatures and pressures to which they are exposed as determined in accordance with Section 909.10.1. Ducts shall be constructed and supported in accordance with the ~~*International*~~*California Mechanical Code*. Ducts shall be leak tested to 1.5 times the maximum design pressure in accordance with nationally accepted practices. Measured leakage shall not exceed 5 percent of design flow. Results of such testing shall be a part of the documentation procedure. Ducts shall be supported directly from fire-resistance-rated structural elements of the building by substantial, noncombustible supports.

Exception: Flexible connections, for the purpose of vibration isolation, complying with the ~~*International*~~*California Mechanical Code* and that are constructed of approved fire-resistance-rated materials.

[Editorial Note: Relocate existing amendments from Section 909.12 to 909.12.1 due to section split.]
909.12 Detection and control systems. Fire detection systems providing control input or output signals to mechanical smoke control systems or elements thereof shall comply with the requirements of Section 907. Such systems shall be equipped with a control unit complying with UL 864 and *listed* as smoke control equipment.

~~*The status of dampers shall be determined using limit or proximity switches installed at the damper or incorporated into the damper actuator. Where multiple dampers are grouped together in an assembly requiring one or more actuators, each damper shall be independently controlled by a separate actuator and provided with an individual limit or proximity switch, or the dampers shall be linked together by a reliable and durable mechanical or otherwise permanent means into one or more groups, with each group provided with a common limit or proximity switch.*~~

~~*The status of fans shall be determined by sensing the air flow downstream of the fans using pressure differential switches or transmitters, or by other means of positive proof of air flow where approved by the enforcing authority.*~~

909.12.1 Verification. Control systems for mechanical smoke control systems shall include provisions for verification. Verification shall include positive confirmation of actuation, testing, manual override and the presence of power downstream of all disconnects. A preprogrammed weekly test sequence, report abnormal conditions audibly, visually and by printed report. The preprogrammed weekly test shall operate all devices, equipment and components used for smoke control.

The status of dampers shall be determined using limit or proximity switches installed at the damper or incorporated into the damper actuator. Where multiple dampers are grouped together in an assembly requiring one or more actuators, each damper shall be independently controlled by a separate actuator and provided with an individual limit

or proximity switch, or the dampers shall be linked together by a reliable and durable mechanical or otherwise permanent means into one or more groups, with each group provided with a common limit or proximity switch.

The status of fans shall be determined by sensing the air flow downstream of the fans using pressure differential switches or transmitters, or by other means of positive proof of air flow where approved by the enforcing authority.

Exception: Where verification of individual components tested through the preprogrammed weekly testing sequence will interfere with, and produce unwanted effects to, normal building operation, such individual components are permitted to be bypassed from the preprogrammed weekly testing, where approved by the building official and in accordance with both of the following:
1. Where the operation of components is bypassed from the preprogrammed weekly test, presence of power downstream of all disconnects shall be verified weekly by a listed control unit.
2. Testing of all components bypassed from the preprogrammed weekly test shall be in accordance with Section 909.20.6 of the ~~*International*~~*California* Fire Code.

909.12.2 Wiring. In addition to meeting requirements of ~~NFPA 70~~*California California Electrical Code*, all wiring, regardless of voltage, shall be fully enclosed within continuous raceways.

909.13.1 Materials. Control-air tubing shall be harddrawn copper, Type L, ACR in accordance with ASTM B 42, ASTM B 43, ASTM B 68, ASTM B 88, ASTM B 251 and ASTM B 280. Fittings shall be wrought copper or brass, solder type in accordance with ASME B 16.18 or ASME B16.22. Changes in direction shall be made with appropriate tool bends. Brass compression-type fittings shall be used at final connection to devices; other joints shall be brazed using a BCuP-5 brazing alloy with solidus above 1,100°F (593°C) and liquids below 1,500°F (816°C). Brazing flux shall be used on copper-to-brass joints only.

Exception: Nonmetallic tubing used within control panels and at the final connection to devices provided all of the following conditions are met:
1. Tubing shall comply with the requirements of Section 602.2.1.3 of the ~~*International*~~*California Mechanical Code.*
2. Tubing and connected devices shall be completely enclosed within a galvanized or paintgrade steel enclosure having a minimum thickness of 0.0296 inch (0.7534 mm) (No.22 gage). Entry to the enclosure shall be by copper tubing with a protective grommet of neoprene or teflon or by suitable brass compression to male barbed adapter.
3. Tubing shall be identified by appropriately documented coding.
4. Tubing shall be neatly tied and supported within the enclosure. Tubing bridging cabinets and doors or moveable devices shall be of sufficient length to avoid tension and excessive stress. Tubing shall be protected against abrasion. Tubing serving devices on doors shall be fastened along hinges.

909.16 Fire fighter's smoke control panel. A fire fighter's smoke control panel for fire department emergency response purposes only shall be provided and shall include manual control or override of automatic control for mechanical smoke control systems. The panel shall be located in a fire command center complying with Section 911 in high-rise buildings, *Group I-2 occupancies having occupied floors located more than 75 feet above the lowest level of fire department vehicle access* or buildings with smoke-protected assembly seating. In all other buildings, the fire fighter's smoke control panel shall be installed in an approved location adjacent to the fire alarm control panel. The fire fighter's smoke control panel shall comply with Sections 909.16.1 through 909.16.3.

909.16.1 Smoke control systems. Fans within the building shall be shown on the fire-fighter's control panel. A clear indication of the direction of airflow and the relationship of components shall be displayed. Status indicators shall be provided for all smoke control equipment, annunciated by fan and zone, and by *approved* pilot-lamp-type indicators as follows:

1. Fans, dampers and other operating equipment in their normal status—WHITE.
2. Fans, dampers and other operating equipment in their off or closed status—RED.
3. Fans, dampers and other operating equipment in their on or open status—GREEN.
4. Fans, dampers and other operating equipment in a fault status—YELLOW/AMBER.

909.16.3 Control action and priorities. The fire fighter's control panel actions shall be as follows:

1. ON-OFF and OPEN-CLOSE control actions shall have the highest priority of any control point within the building. Once issued from the fire fighter's control panel, automatic or manual control from any other control point within the

building shall not contradict the control action. Where automatic means are provided to interrupt normal, nonemergency equipment operation or produce a specific result to safeguard the building or equipment including, but not limited to, duct freezestats, duct smoke detectors, high-temperature cutouts, temperature-actuated linkage and similar devices, such means shall be capable of being overridden by the fire fighter's control panel. The last control action as indicated by each fire fighter's control panel switch position shall prevail. Control actions shall not require the smoke control system to assume more than one configuration at any one time.

Exception: Power disconnects required by ~~NFPA 70~~*California Electrical Code.*

2. Only the AUTO position of each three-position fire fighter's control panel switch shall allow automatic or manual control action from other control points within the building. The AUTO position shall be the NORMAL, nonemergency, building control position. Where a fire-fighter's control panel is in the AUTO position, the actual status of the device (on, off, open, closed) shall continue to be indicated by the status indicator described in Section 909.16.1. Where directed by an automatic signal to assume an emergency condition, the NORMAL position shall become the emergency condition for that device or group of devices within the zone. Control actions shall not require the smoke control system to assume more than one configuration at any one time.

909.18.9 Identification and documentation. Charts, drawings and other documents identifying and locating each component of the smoke control system, and describing it.s proper function and maintenance requirements, shall be maintained on file at the building as an attachment to the report required by Section 909.18.8.3. Devices shall have an approved identifying tag or mark on them consistent with the other required documentation and shall be dated indicating the last time they were successfully tested and by whom.

An approved operations manual describing the complete operations of the smoke control system and functioning of the firefighters smoke control panel shall be maintained at the fire command center.

909.20 Smokeproof enclosures. Where required by Section 1023.11, a smokeproof enclosure shall be constructed in accordance with this section. A smokeproof enclosure shall consist of an interior exit stairway or ramp that is enclosed in accordance with the application provisions of Section 1023 and an open exterior balcony or ~~ventilated~~ vestibule meeting the requirements of this section. Where access to the roof is required by the ~~*International*~~*California Fire Code*, such access shall be from the smokeproof enclosure where a smokeproof enclosure is required.

909.20.1 Access. Access to the stairway or ramp shall be by way of a vestibule or an open exterior balcony. The minimum dimension of the vestibule shall be not less than the ~~required~~ width of the corridor leading to the vestibule *as calculated in accordance with Section 1005.1,* but shall not have a width of less than 44 inches (1118 mm) and shall not have a length of less than 72 inches (1829 mm)in the direction of egress travel.

909.20.2.2 Vestibule doors. *Where access to the stairway is by way of a vestibule, the door assembly from the building into the vestibule shall be a 90-minute fire door assembly complying with Section ~~715.4.4~~716.5.5. The door assembly from the vestibule to the stairway shall have not less than a 20-minute fire protection rating and shall comply with the requirements for a smoke door assembly in accordance with Section ~~715.4.3~~716.5.3. The door shall be installed in accordance with NFPA-105.*

909.20.2.3 Standpipes. *Where access to the stairway is by way of a vestibule, Fire department standpipe connections and valves serving the floor shall be within the vestibule unless otherwise approved by the fire code official. Standpipe connections in vestibules shall be located in such a manner so as not to obstruct egress where hose lines are connected and charged.*

909.20.2.4 Pressure differences. *The minimum pressure differences within the vestibule with the doors closed shall be 0.05-inch water gage (12.44 Pa) positive pressure relative to the fire floor and 0.05-inch water gage (12.44 Pa) negative pressure relative to the exit enclosure. No pressure difference is required relative to a nonfire floor.*

909.20.2.5 Relief vent. *A relief vent capable of discharging a minimum of 2,500 cubic feet per minute (1180 L/s) of air at the design pressure difference shall be located in the upper portion of such pressurized exit enclosures.*

Exception: *When approved by the enforcing agency, other engineered design methods capable of discharging a minimum of 2,500 cubic feet per minute (1180 L/s) of air at the design pressure difference shall be permitted.*

909.20.3 Natural ventilation alternative. The provisions of Sections 909.20.3.1 ~~through~~ *and* ~~909.20.3.3~~*909.20.3.2* shall apply to ventilation of smokeproof enclosures by natural means.

909.20.3.1 Balcony doors. Where access to the stairway or ramp is by way of an open exterior balcony, the door assembly into the enclosure shall be a fire door assembly in accordance with Section 716.5.

~~**909.20.3.2 Vestibule doors.** Where access to the stairway is by way of a vestibule, the door assembly into the vestibule shall be a fire door complying with Section 716.5. The door assembly from the vestibule to the stairway shall have not less than a 20-minute fire protection rating complying with Section 716.5.~~

~~**909.20.3.3**~~***909.20.3.2*** **Vestibule ventilation.** *Where access to the stairway is by way of a vestibule, ~~E~~*each vestibule shall have a minimum net area of 16 square feet (1.5 m2) of opening in a wall facing an outer court, yard or public way that is not less than 20 feet (6096 mm) in width.

909.20.4 Mechanical ~~**ventilation**~~***pressurization*** **alternative.** The provisions of Sections 909.20.4.1 through ~~909.20.4.4~~*909.20.4.3* shall apply to ventilation ~~of smokeproof~~ *to pressurization* enclosures by mechanical means.

909.20.4.1 Pressure differences. *The pressurization system shall be designed so that the minimum pressure differences provided within the vestibule with the doors closed shall be 0.05-inch water gage (12.44 Pa) positive pressure relative to the fire floor and 0.05-inch water gage (12.44 Pa) negative pressure relative to the exit enclosure. No pressure difference is required relative to a nonfire floor.*

~~**909.20.4.1 Vestibule doors.** The door assembly from the building into the vestibule shall be a fire door assembly complying with Section 716.5.3. The door assembly from the vestibule to the stairway or ramp shall not have less than a 20-minute fire protection rating and shall meet the requirements for a smoke door assembly in accordance with Section 716.5.3. The door shall be installed in accordance with NFPA 105.~~

~~**909.20.4.2 Vestibule ventilation.** The vestibule shall be supplied with not less than one air change per minute and the exhaust shall be not less than 150 percent of supply. Supply air shall enter and exhaust air shall discharge from the vestibule through separate, tightly constructed ducts used only for that purpose. Supply air shall enter the vestibule within 6 inches (152 mm) of the floor level. The top of the exhaust register shall be located at the top of the smoke trap but not more than 6 inches (152 mm) down from the top of the trap, and shall be entirely within the smoke trap area. Doors in the open position shall not obstruct duct openings. Duct openings with controlling dampers are permitted where necessary to meet the design requirements, but dampers are not otherwise required.~~

~~**909.20.4.2.1 Engineered ventilation system.** Where a specially engineered system is used, the system shall exhaust a quantity of air equal to not less than 90 air changes per hour from any vestibule in the emergency operation mode and shall be sized to handle three vestibules simultaneously. Smoke detectors shall be located at the floor-side entrance to each vestibule and shall activate the system for the affected vestibule. Smoke detectors shall be installed in accordance with Section 907.3.~~

~~**909.20.4.3 Smoke trap.** The vestibule ceiling shall be not less than 20 inches (508 mm) higher than the door opening into the vestibule to serve as a smoke and heat trap and to provide an upward moving air column. The height shall not be decreased unless approved and justified by design and test.~~

~~**909.20.4.4 Stairway or ramp shaft air movement system.** The stairway or ramp shaft shall be provided with a dampered relief opening and supplied with sufficient air to maintain a minimum positive pressure of 0.10 inch of water (25 Pa) in the shaft relative to the vestibule with all doors closed.~~

~~**909.20.5 Stairway and ramp pressurization alternative.** Where the building is equipped throughout with an automatic sprinkler system in accordance with Section 903.3.1.1, the vestibule is not required, provided each interior exit stairway or ramp is pressurized to not less than 0.10 inch of water (25 Pa) and not more than 0.35 inchs of water (87 Pa) in the shaft relative to the building measured with all interior exit stairway and ramp doors closed under maximum anticipated conditions of stack effect and wind effect.~~

~~**909.20.6**~~***909.20.4.3*** ~~**Ventilating**~~***Pressurization*** **equipment.** The activation of ~~ventilating~~*pressurization* equipment required by ~~the alternatives in Sections 909.20.4 and 909.20.5~~ *Section 909.20.4* shall be by smoke detectors installed at each floor level at an *approved* location at the entrance to the smokeproof enclosure *and upon activation of the automatic controls required by Section* ~~909.12.3~~*909.12.4*. When the closing device for the *stair* shaft and

vestibule doors is activated by smoke detection or power failure, the mechanical equipment shall activate and operate at the required performance levels. Smoke detectors shall be installed in accordance with Section 907.3.

~~909.20.6.1~~*909.20.4.3.1* ~~Ventilation~~*Pressurization* **systems.** Smokeproof enclosure ~~ventilation~~*pressurization* systems shall be independent of other building ventilation systems. The equipment, control wiring, power wiring and ductwork shall comply with one of the following:

1. Equipment, control wiring, power wiring and ductwork shall be located exterior to the building and directly connected to the smokeproof enclosure or connected to the smokeproof enclosure by ductwork enclosed by not less than 2-hour fire barriers constructed in accordance with Section 707 or horizontal assemblies constructed in accordance with Section 711, or both.
2. Equipment, control wiring, power wiring and ductwork shall be located within the smokeproof enclosure with intake or exhaust directly from and to the outside or through ductwork enclosed by not less than 2-hour fire barriers constructed in accordance with Section 707 or horizontal assemblies constructed in accordance with Section 711, or both.
3. Equipment, control wiring, power wiring and ductwork shall be located within the building if separated from the remainder of the building, including other mechanical equipment, by not less than 2-hour fire barriers constructed in accordance with Section 707 or horizontal assemblies constructed in accordance with Section 711, or both.

Exceptions:
1. Control wiring and power wiring utilizing a 2-hour rated cable or cable system.
2. Where encased with not less than 2 inches (51 mm) of concrete.
3. Control wiring and power wiring protected by a listed electrical circuit protective system with a fire-resistance rating of not less than 2 hours.

~~909.20.6.2~~*909.20.4.3.2* **Standby power.** ~~Mechanical vestibule~~ *Pressurization* and stairway and ramp shaft ventilation systems and automatic fire detection systems shall be powered in accordance with Section 2702.

~~909.20.6.3~~*909.20.4.3.3* **Acceptance and testing.** Before the mechanical equipment is approved, the system shall be tested in the presence of the building official to confirm that the system is operating in compliance with these requirements.

911.1 General. Where required by other sections of this code and in buildings classified as high-rise buildings by this code *and Group I-2 occupancies having occupied floors located more than 75 feet above the lowest level of fire department vehicle access*, a fire command center for fire department operations shall be provided and shall comply with Sections 911.1.1 through 911.1.6.

911.1.6 Required features. The fire command center shall comply with NFPA 72 and shall contain all of the following features:

1. The emergency voice/alarm communication system control unit.
2. The fire department communications system.
3. ~~Fire detection and alarm system annunciator~~*Fire alarm system zoning annunciator panel required by Section 907.6.3.3.*
4. Annunciator unit visually indicating the location of the elevators and whether they are operational.
5. Status indicators and controls for air distribution systems.
6. The fire fighter's control panel required by Section 909.16 for smoke control systems installed in the building.
7. Controls for unlocking interior exit stairway doors simultaneously.
8. Sprinkler valve and waterflow detector display panels.
9. Emergency and standby power status indicators.
10. A telephone for fire department use with controlled access to the public telephone system.
11. Fire pump status indicators.
12. Schematic building plans indicating the typical floor plan and detailing the building core, means of egress, fire protection systems, fire fighter air replenishment system, fire-fighting equipment and fire department access and the location of fire walls, fire barriers, fire partitions, smoke barriers and smoke partitions.
13. An approved Building Information Card that contains, but is not limited to, the following information:
13.1. General building information that includes:

property name, address, the number of floors in the building above and below grade, use and occupancy classification (for mixed uses, identify the different types of occupancies on each floor), and the estimated building population during the day, night and weekend.
13.2. Building emergency contact information that includes: a list of the building's emergency contacts including but not limited to building manager and building engineer and their respective work phone number, cell phone number, e-mail address.
13.3. Building construction information that includes: the type of building construction including but not limited to floors, walls, columns, and roof assembly.
13.4. Exit access and exit stairway information that includes: number of exit access and exit stairways in the building, each exit access and exit stairway designation and floors served, location where each exit access and exit stairway discharges, interior exit stairways that are pressurized, exit stairways provided with emergency lighting, each exit stairway that allows reentry, exit stairways providing roof access; elevator information that includes: number of elevator banks, elevator bank designation, elevator car numbers and respective floors that they serve; location of elevator machine rooms, control rooms and control spaces; location of sky lobby, location of freight elevator banks.
13.5. Building services and system information that includes: location of mechanical rooms, location of building management system, location and capacity of all fuel oil tanks, location of emergency generator, location of natural gas service.
13.6. Fire protection system information that includes: location of standpipes, location of fire pump room, location of fire department connections, floors protected by automatic sprinklers, location of different types of automatic sprinkler systems installed including, but not limited to, dry, wet, and pre-action.
13.7 Hazardous material information that includes: location of hazardous material, quantity of hazardous material.
14. Work table.
15. Generator supervision devices, manual start and transfer features.
16. Public address system, where specifically required by other sections of this code.
17. Elevator fire recall switch in accordance with ~~ASME A17.1~~*California Code of Regulations, Title 8, Division 1, Chapter 4, Subchapter 6, Elevator Safety Orders.*
18. Elevator emergency or standby power selector switch(es), where emergency or standby power is provided.
19. A master switch for unlocking elevator lobby doors permitted by Section ~~1008.1.9.12~~1010.1.9.10.
[SFM] Fire command centers shall not be used for the housing of any boiler, heating unit, generator, combustible storage, or similar hazardous equipment or storage.

***~~911.1.6~~911.1.7* Ventilation.** *The Fire Command Center shall be provided with an independent ventilation or air-conditioning system.*

912.4 Access. Immediate access to fire department connections shall be maintained at all times and without obstruction by fences, bushes, trees, walls or any other fixed or moveable object. Access to fire department connections shall be *approved* by the fire chief.

Exceptions:
1. Fences, where provided with an access gate equipped with a sign complying with the legend requirements of Section ~~912.4~~912.5 and a means of emergency operation. The gate and the means of emergency operation shall be approved by the fire chief and maintained operational at all times.
2. When acceptable to the fire authority having jurisdiction, fire department connections for Group I-3 detention facilities may be located inside all security walls or fences on the property.

912.6 Backflow protection. The potable water supply to automatic sprinkler and standpipe systems shall be protected against backflow as required by ~~the *International Plumbing Code*~~ *Health and Safety Code Section 13114.7.*

913.6 Fire pumps in high-rise buildings. *Engine-driven fire pumps and electric drive fire pumps supplied by generators shall both be provided with an on-premises fuel supply, sufficient for not less than 8-hour full-demand operation at 100% of the rated pump capacity in addition to all other required supply demands in accordance with Sections 9.6 and 11.4.2 of NFPA 20 and this Section. (Also see Section ~~604.2.14.1.1~~604.1.4.1 of the California Fire Code.)*

916.1 General. Emergency responder radio coverage shall be provided in all new buildings in accordance with Section 510 of the ~~*International*~~*California Fire Code.*

CHAPTER 10

MEANS OF EGRESS

1001.3 Maintenance. Means of egress shall be maintained in accordance with the ~~*International*~~*California Fire Code*.

1001.4 Fire safety and evacuation plans. Fire safety and evacuation plans shall be provided for all occupancies and buildings where required by the ~~*International*~~*California Fire Code*. Such fire safety and evacuation plans shall comply with the applicable provisions of Sections 401.2 and 404 of the ~~*International*~~*California Fire Code*.

1003.1 Applicability. The general requirements specified in Sections 1003 through 1015 shall apply to all three elements of the means of egress system, in addition to those specific requirements for the exit access, the exit and the exit discharge detailed elsewhere in this chapter.

Exception: *Exiting requirements for Fixed Guideway Transit Systems shall be as per Section ~~433.3~~443.*

1003.2 Ceiling height. The means of egress shall have a ceiling height of not less than 7 feet 6 inches (2286 mm).

Exceptions:
1. Sloped ceilings in accordance with Section 1208.2.
2. Ceilings of dwelling units and sleeping units within residential occupancies in accordance with Section 1208.2.
3. Allowable projections in accordance with Section 1003.3.
4. Stair headroom in accordance with Section 1011.3
5. Door height in accordance with Section 1010.1.1.
6. Ramp headroom in accordance with Section 1012.5.2.
7. The clear height of floor levels in vehicular and pedestrian traffic areas of public and private parking garages in accordance with Section 406.4.1.
8. Areas above and below *mezzanine* floors in accordance with Section 505.2.
9. *In Group I-2, I-2.1 and I-3 occupancies, the means of egress shall have a ceiling height of not less than 8 feet (2439 mm).*

1003.3 Protruding objects. Protruding objects on circulation paths shall comply with the requirements of Sections 1003.3.1 through 1003.3.4.

Exception: *In Group I-2 and Group I-2.1 occupancies, protruding objects shall not extend more than 12 inches (305 mm) below the minimum ceiling height required by Section 1003.2.*

1003.3.3.1 Horizontal projections for Group I-2* and I-2.1 *occupancies. *Structural elements, fixtures or furnishings shall not project horizontally from either side more than 1-1/2 inches (38 mm) into the required width of an exit access corridor serving any area caring for one or more nonambulatory or bedridden persons.*

Exceptions:
1. Handrails are permitted to protrude 31/2 inches (89 mm) from the wall.
2. Alcohol-based hand-rub dispensers are permitted to protrude 4 inches.
3. Manual fire alarm boxes with a protective cover installed are permitted to protrude 4 inches.

1003.5 Elevation change. Where changes in elevation of less than 12 inches (305 mm) exist in the *means of egress*, sloped surfaces shall be used. Where the slope is greater than one unit vertical in 20 units horizontal (5-percent slope), *ramps* complying with Section 1012 shall be used. Where the difference in elevation is 6 inches (152 mm) or less, the *ramp* shall be equipped with either handrails or floor finish materials that contrast with adjacent floor finish materials.

Exceptions:
1. A single step with a maximum riser height of 7 inches (178 mm) is permitted for buildings with occupancies in Groups F, H, R-2, R-3, S and U at exterior doors not required to be accessible by Chapter ~~11~~ *11A or 11B*.
2. A stair with a single riser or with two risers and a tread is permitted at locations not required to be accessible by Chapter ~~11~~ *11A or 11B* where the risers and treads comply with Section 1011.5, the minimum depth of the tread is 13 inches (330 mm) and not less than one handrail complying with Section 1014 is provided within 30 inches (762 mm) of the centerline of the normal path of egress travel on the stair.

3. A step is permitted in aisles serving seating that has a difference in elevation less than 12 inches (305 mm) at locations not required to be accessible by Chapter ~~11~~ *11A or 11B*, provided that the risers and treads comply with Section 1029.13 and the aisle is provided with a handrail complying with Section 1029.15.

Throughout a story in a Group I-2 ~~occupancy~~ *and Group I-2.1 occupancies*, any change in elevation in portions of the means of egress that serve nonambulatory persons shall be by means of a *ramp* or sloped walkway.

[Editorial Note: Remove existing amendments to Section 1004.1.1.1-1004.1.1.3. Model code now matches old CA amendments.]

1004.1.1.1 Intervening spaces or accessory areas. Where occupants egress from one or more rooms, areas or spaces through others, the design occupant load shall be the combined occupant load of interconnected accessory or intervening spaces. Design of egress path capacity shall be based on the cumulative portion of occupant loads of all rooms, areas or spaces to that point along the path of egress travel.

~~**1004.1.1.1 Intervening spaces *or accessory areas.*** Where occupants egress from one *or more* rooms, areas or spaces through *others*, the design occupant load shall be *the combined occupant load of interconnected accessory or intervening spaces. Design of egress path capacity shall* be based on the cumulative *portion of* occupant loads of all rooms, areas or spaces to that point along the path of egress travel.~~

1004.1.1.2 Adjacent levels for mezzanines. That portion of the occupant load of a mezzanine with required egress through a room, area or space on an adjacent level shall be added to the occupant load of that room, area or space.

~~**1004.1.1.2 Adjacent levels *for mezzanines.*** *That portion of* occupant load of a mezzanine with *all required* egress through a room, area or space on an adjacent level shall be added to the *occupant load* of that room, area or space.~~

1004.1.1.3 Adjacent stories. Other than for the egress components designed for convergence in accordance with Section 1005.6, the occupant load from separate stories shall not be added.

~~***1004.1.1.3 Adjacent stories.*** *Other than for the egress components designed for convergence in accordance with Section 1005.6, the occupant load from separate stories shall not be added.*~~

TABLE 1004.1.2
MAXIMUM FLOOR AREA ALLOWANCES PER OCCUPANT

FUNCTION OF SPACE	OCCUPANT LOAD FACTOR[a]
Accessory storage areas, mechanical equipment room	300 gross
Agricultural building	300 gross
Aircraft hangars	500 gross
Airport terminal Baggage claim Baggage handling Concourse Waiting areas	 20 gross 300 gross 100 gross 15 gross
Assembly Gaming floors (keno, slots, etc.) Exhibit gallery and museum	 11 gross 30 net
Assembly with fixed seats	See Section 1004.7
Assembly without fixed seats Concentrated (chairs only-not fixed) Standing space Unconcentrated (tables and chairs)	 7 net 5 net 15 net
Bowling centers, allow 5 persons for each lane including 15 feet of runway, and	

for additional areas	7 net
Business areas	100 gross
Courtrooms-other than fixed seating areas	40 net
Day care	35 net
Dormitories	50 gross
Educational Classroom area Shops and other vocational room areas	 20 net 50 net
Exercise rooms	50 gross
H-5 Fabrication and manufacturing areas	200 gross
Industrial areas	100 gross
Institutional areas Inpatient treatment areas Outpatient areas Sleeping areas	 240 gross 100 gross 120 gross
Kitchens, commercial	200 gross
Laboratory *Educational* *Laboratories, non-educational* *Laboratory suite*[ab]	 *50 net* *100 net* *200 gross*
Library Reading rooms Stack area	 50 net 100 gross
Locker rooms	50 gross
Mall buildings – covered and open	See Section 402.8.2
Mercantile Areas on other floors Storage, stock, shipping areas	 60 gross 300 gross
Parking garages	200 gross
Residential	200 gross
Skating rinks, swimming pools Rink and pool Decks	 50 gross 15 gross
Stages and platforms	15 net
Warehouses	500 gross

For SI: 1 square foot = 0.0929 m2.
[a] Floor area in square feet per occupant.
[b] *See Section 453.2.*

1005.3.2 Other egress components. The capacity, in inches, of means of egress components other than stairways shall be calculated by multiplying the occupant load served by such component by a means of egress capacity factor of 0.2 inch (5.1 mm) per occupant.

Exceptions:
1. For other than Group H and I-2 occupancies, the capacity, in inches, of means of egress components other than stairways shall be calculated by multiplying the occupant load served by such component by a means of egress

capacity factor of 0.15 inch (3.8 mm) per occupant in buildings equipped throughout with an automatic sprinkler system installed in accordance with Section 903.3.1.1 or 903.3.1.2 and an emergency voice/alarm communication system in accordance with Section 907.5.2.2.
2. Facilities with smoke-protected assembly seating shall be permitted to use the capacity factors in Table 1029.6.2 indicated for level or ramped aisles for means of egress components other than stairways where the entire path for means of egress from the seating to the exit discharge is provided with a smoke control system complying with Section 909.
3. Facilities with outdoor smoke-protected assembly seating shall be permitted to the capacity factors in Section 1029.6.3 indicated for level or ramped aisles for means of egress components other than stairways where the entire path for means of egress from the seating to the exit discharge is open to the outdoors.

~~2.~~3. For Group H-1, H-2, H-3 and H-4 occupancies the total width of means of egress in inches (mm) shall not be less than the total occupant load served by the means of egress multiplied by 0.4 inches (5.08 mm) per occupant.
~~3.~~4. 3. Means of egress complying with Section ~~1028~~ 1029.

1005.7.1 Doors. Doors, when fully opened, shall not reduce the required width by more than 7 inches (178 mm). Doors in any position shall not reduce the required width by more than one-half.

Exceptions:
1. *In other than Group I-2 occupancies,* surface-mounted latch release hardware shall be exempt from inclusion in the 7-inch maximum (178 mm) encroachment where both of the following conditions exist:
1.1. The hardware is mounted to the side of the door facing away from the adjacent wall where the door is in the open position.
1.2. The hardware is mounted not less than 34 inches (865 mm) nor more than 48 inches (1219 mm) above the finished floor.

2. The restrictions on door swing shall not apply to doors within individual dwelling units and sleeping units of Group R-2 occupancies and dwelling units of Group R-3 occupancies.

1005.7.2 Other projections. Handrail projections shall be in accordance with the provisions of Section 1014.8. Other nonstructural projections such as trim and similar decorative features shall be permitted to project into the required width not more than 11/2 inches (38 mm) on each side.

~~**Exception:** Projections are permitted in corridors within Group I-2 Condition 1 in accordance with Section 407.4.3.~~

~~1015.1~~ 1006.2.1 Egress based on occupant load and common path of egress travel distance. Two exits or exit access doorways from any space shall be provided where the design occupant load or the common path of egress travel distance exceeds the values listed in Table 1006.2.1.

Exceptions:
1. In Group R-2 and R-3 occupancies, one means of egress is permitted within and from individual dwelling units with a maximum occupant load of 20 where the dwelling unit is equipped through- out with an automatic sprinkler system in accordance with Section 903.3.1.1 or 903.3.1.2 and the common path of egress travel does not exceed 125 feet (38 100 mm).
2. Care suites in Group I-2 occupancies complying with Section 407.4.
~~4.~~3. In detention and correctional facilities and holding cells, such as are found in courthouse buildings, when the occupant load is more than 20 see Section 408.3.11.

[Editorial Note: CA amendments to section Table 1006.2.1.1 are relocated from 2013 CBC Tables 1014.3 and 1015.1]

TABLE ~~1014.3~~ 1006.2.1
SPACES WITH ONE EXIT OR EXIT ACCESS DOORWAY

OCCUPANCY	MAXIMUM OCCUPANT LOAD OF SPACE	MAXIMUM COMMON PATH OF EGRESS TRAVEL DISTANCE (feet)	
		WITHOUT SPRINKLER SYSTEM (feet)	WITH SPRINKLER

		Occupant Load		SYSTEM (feet)
		≤30	>30	
A[c], E, M	49	75	75	75[a]
B	49	100	75	100[a]
F	49	75	75	100[a]
H-1, H-2, H-3	3	NP	NP	25[b]
H-4, H-5	10	NP	NP	75[b]
~~I-1,~~ I-2[d], *I-2.1*, I-4	10	NP	NP	75[a]
I-3	10	NP	NP	100[a]
R-1	10	NP	NP	75[a]
R-2	10	NP	NP	125[a]
R-2.1	*10*	*NP*	*NP*	*75*
R-3[e], *R-3.1*[e]	10	NP	NP	125[a,g]
R-4[e]	10	~~75~~ *NP*	~~75~~ *NP*	125[a,g]
S[f]	29	100	75	100[a]
U	49	100	75	75[a]
L	*See Section 453.6.1*			

a. Buildings equipped throughout with an automatic sprinkler system in accordance with Section 903.3.1.1 or 903.3.1.2. See Section 903 for occupancies where automatic sprinkler systems are permitted in accordance with Section 903.3.1.2.
b. Group H occupancies equipped throughout with an automatic sprinkler system in accordance with Section 903.2.5.
c. For a room or space used for assembly purposes having fixed seating, see Section 1029.8.
d. For the travel distance limitations in Group I-2, see Section 407.4.
e. The length of common path of egress travel distance in a Group R-3 occupancy located in a mixed occupancy building or within a Group R-3 or R-4 congregate living facility.
f. The length of common path of egress travel distance in a Group S-2 open parking garage shall be not more than 100 feet.
g. For the travel distance limitations in Group R-3 and R-4 equipped throughout with an automatic sprinkler system in accordance with Section 903.3.1.3, see Section 1006.2.2.6
h. For holding cells, see Section 408.3.11.

1006.2.2 Egress based on use. The numbers of exits or access to exits shall be provided in the uses described in Sections 1006.2.2.1 through ~~1006.2.2.5~~*1006.2.2.7*.

~~1015.5~~**1006.2.2.3 Refrigerated rooms or spaces.** Rooms or spaces having a floor area larger than 1,000 square feet (93 m2), containing a refrigerant evaporator and maintained at a temperature below 68°F (20°C), shall have access to not less than two exits or exit access doorways.

Exit access travel distance shall be determined as specified in Section 1017.1, but all portions of a refrigerated room or space shall be within 150 feet (45 720 mm) of an exit or exit access doorway where such rooms are not protected by an approved automatic sprinkler system. Egress is allowed through adjoining refrigerated rooms or spaces.

Exception: Where using refrigerants in quantities limited to the amounts based on the volume set forth in the ~~International~~*California* Mechanical Code.

~~1015.6~~**1006.2.2.4 Day care means of egress.** Day care facilities, rooms or spaces where care is provided for more than 10 children that are 2~~1/2~~ years of age or less, shall have access to not less than two exits or exit access doorways.

1006.2.2.6 Group R-3 and R-4. *Where Group R-3 occupancies are permitted by Section 903.2.8 to be protected by an automatic sprinkler system installed in accordance with Section 903.3.1.3, the exit access travel distance for Group R-3 shall not be more than 125 feet. Where Group R-4 occupancies are permitted by Section 903.2.8 to be protected by an automatic sprinkler system installed in accordance with Section 903.3.1.3, the exit access travel distance for Group R-4 shall not be more than 75 feet.*

~~1015.7~~**1006.2.2.7** ***Large family day-care home.*** *Every story or basement of a large family day-care home shall be provided with two exits which are remotely located from each other. Every required exit shall be of a size to permit the*

installation of a door not less than 32 inches (813 mm) in clear width and not less than 6 feet 8 inches (2,032 mm) in height. A manually operated horizontal sliding door may be used as one of the two required exits.

Where basements are used for day-care purposes, one of the two required exits shall provide access directly to the exterior without entering the first story. The second exit from the basement may either pass through the story above or exit directly to the exterior.

Rooms used for day-care purposes shall not be located above the first story.

***Exception:** Buildings equipped with an automatic sprinkler system throughout and which have at least one of the required exits providing access directly to the exterior. NFPA 13R may be used in large family day-care homes. The sprinkler omissions of NFPA 13R shall not apply unless approved by the enforcing agency.*

Exit doors, including manually operated horizontal sliding doors, shall be openable from the inside without use of a key or any special knowledge or effort.

Tables ~~1021.1~~1006.3.2(1) and ~~1021.2~~1006.3.2(2) are not applicable to this occupancy classification.

TABLE ~~1021.2(1)~~1006.3.2(1)
STORIES WITH ONE EXIT OR ACCESS TO ONE EXIT FOR R-2 *AND R-3* OCCUPANCIES

STORY	OCCUPANCY	MAXIMUM NUMBER OF DWELLING UNITS	MAXIMUM COMMON PATH OF EGRESS TRAVEL DISTANCE
Basement, first, second or third story above grade plane ~~above grade plane~~	R-2[a,b] *R-3*[a]	4 dwelling units *NA*	125 feet *NA*
Fourth story above grade plane ~~above grade plane~~ and higher ~~higher~~	~~NP~~ *R-3*[a]	NA	~~NA~~*125 feet*

For SI: 1 foot = 3048 mm.
NP – Not Permitted
NA – Not Applicable
a. Buildings classified as Group R-2 *or R-3* equipped throughout with an automatic sprinkler system in accordance with Section 903.3.1.1 or 903.3.1.2 and provided with emergency escape and rescue openings in accordance with Section 1029.
b. This table is used for R-2 occupancies consisting of dwelling units. For R-2 occupancies consisting of sleeping units, use Table 1006.3.2(2).

TABLE ~~1021.2(2)~~1006.3.2(2)
STORIES WITH ONE EXIT OR ACCESS TO ONE EXIT FOR OTHER OCCUPANCIES

STORY	OCCUPANCY	MAXIMUM OCCUPANT LOAD PER STORY	MAXIMUM COMMON PATH OF EGRESS TRAVEL DISTANCE (feet)
First story above ~~above~~ or below grade plane ~~below grade plane~~	A, B[b], E F[b], M, U	49 occupants	75 feet
	H-2, H-3	3 occupants	25 feet
	H-4, H-5, I, R-1, R-2[a,c], R-4	10 occupants	75 feet
	I-2, I-2.1	*7 occupants*	*50 feet*
	S	29 occupants	75 feet
Second story above grade plane ~~above grade plane~~	B, F, M, S[d]	29 occupants	75 feet
Third story above grade plane ~~above grade plane~~ and higher ~~higher~~	NP	NA	NA

For SI: 1 foot = 304.8 mm.
NP – Not Permitted
NA – Not Applicable

a. Buildings classified as Group R-2 equipped throughout with an automatic sprinkler system in accordance with Section 903.3.1.1 or 903.3.1.2 and provided with emergency escape and rescue openings in accordance with Section 1029.
b. Group B, F and S occupancies in buildings equipped throughout with an automatic sprinkler system in accordance with Section 903.3.1.1 shall have a maximum exit access travel distance of 100 feet.
c. This table is used for R-2 occupancies consisting of sleeping units. For R-2 occupancies consisting of dwelling units, use Table 1006.3.2(1).
d. The length of exit access travel distance in a Group S-2 open parking garage shall be not more than 100 feet.

~~1006.1~~1008.2 **Illumination required.** Illumination required. The means of egress serving a room or space shall be illuminated at all times that the room or space is occupied..

Exceptions:
1. Occupancies in Group U.
2. Aisle accessways in Group A.
3. Dwelling units and sleeping units in Groups R-1, R-2 and R-3.
4. Sleeping units of Group I, *R-2.1 and R-4* occupancies.

~~1007.1~~1009.1 **Accessible means of egress required.** Accessible means of egress shall comply with this section. Accessible spaces shall be provided with not less than one accessible means of egress. Where more than one *means of egress* are required by Section 1006.2 or 1006.3 from any accessible space, each accessible portion of the space shall be served by ~~not less than two~~ accessible means of egress *in at least the same number as required by Section ~~1015.1~~1006.2 or ~~1021.1~~1006.3. In addition to the requirements of this chapter, means of egress, which provide access to, or egress from, buildings for persons with disabilities, shall also comply with the requirements of Chapter 11A or 11B as applicable.*

Exceptions:
1. Accessible means of egress are not required to be provided in existing buildings.
2. One accessible means of egress is required from an accessible mezzanine level in accordance with Section 1009.3, 1009.4 or 1009.5, *and Chapter 11A or 11B, as applicable.*
3. In assembly areas with ramped aisles or stepped aisles, one accessible means of egress is permitted where the common path of egress travel is accessible and meets the requirements in Section 1029.8, *and Chapter 11A or 11B, as applicable.*

~~1007.4~~1009.4 **Elevators.** In order to be considered part of an accessible means of egress, an elevator shall comply with the emergency operation and signaling device requirements of ~~Section 2.27 of ASME A17.1~~*California Code of Regulations, Title 8, Division 1, Chapter 4, Subchapter 6, Elevator Safety Orders*. Standby power shall be provided in accordance with Chapter 27 and Section 3003. The elevator shall be accessed from an area of refuge complying with Section 1009.6.

Exceptions:
1. Areas of refuge are not required at the elevator in open parking garages.
2. Areas of refuge are not required in buildings and facilities equipped throughout with an automatic sprinkler system installed in accordance with Section 903.3.1.1 or 903.3.1.2.
3. Areas of refuge are not required at elevators not required to be located in a shaft in accordance with Section 712.
4. Areas of refuge are not required at elevators serving smoke-protected assembly seating areas complying with Section 1029.6.2.
5. Areas of refuge are not required for elevators accessed from a refuge area in conjunction with a horizontal exit.

~~1007.5~~ 1009.5 **Platform lifts.** Platform lifts shall be permitted to serve as part of an accessible means of egress, where allowed as part of a required accessible route in ~~Section 1109.8 of the except for Item 10~~ *Chapter 11B*. Standby power for the platform lift shall be provided in accordance with Chapter 27.

~~1007.6.1~~1009.6.3 **Size.** Each area of refuge shall be sized to accommodate ~~one~~ *two* wheelchair space ~~of~~ *that are not less than* 30 inches by 48 inches (762 mm by 1219 mm). *The total number of such 30-inch by 48-inch (762 mm by 1219 mm) spaces per story shall be not less than one for every 200 persons of calculated occupant load served by the area of refuge.* ~~for each 200 occupants or portion thereof, based on the occupant load of the area of refuge and areas served by the area of refuge.~~ Such wheelchair spaces shall not reduce the means of egress minimum width or

required capacity. Access to any of the required wheelchair spaces in an area of refuge shall not be obstructed by more than one adjoining wheelchair space.

Exception: *The enforcing agency may reduce the size of each required area of refuge to accommodate one wheelchair space that is not less than 30 inches by 48 inches (762 mm by 1219 mm) on floors where the occupant load is less than 200.*

~~1007.8.1~~1009.8.1 **System requirements** – Two-way communication systems shall provide communication between each required location ~~and the fire command center or~~ *and* a central control point location approved by the fire department. Where the central control point is not a constantly attended location, a two-way communication system shall have a timed automatic telephone dial-out capability to a*n approved* monitoring location ~~or 9-1-1~~. The two-way communication system shall include both audible and visible signals.

~~1007.8.2~~1009.8.2 **Directions** – Directions for the use of the two-way communication system, instructions for summoning assistance via the two-way communication system and written identification of the location shall be posted adjacent to the two-way communication system. Signage shall comply with ~~the ICC A117.1~~ *Chapter 11A, Section 1143A* requirements for visual characters..

~~1007.12~~1009.12 ***Alarms/emergency warning systems/accessibility.*** *If emergency warning systems are required, they shall activate a means of warning the hearing impaired. Emergency warning systems as part of the fire-alarm system shall be designed and installed in accordance with NFPA 72 as amended in Chapter 35.*

~~1008.1.1.1~~1010.1.1.1 **Projections into clear width.** There shall not be projections into the required clear width lower than 34 inches (864 mm) above the floor or ground. Projections into the clear opening width between 34 inches (864 mm) and 80 inches (2032 mm) above the floor or ground shall not exceed 4 inches (102 mm).

Exceptions:
1. Door closers and door stops shall be permitted to be 78 inches (1980 mm) minimum above the floor.
2. In a Group I-2 or I-2.1 occupancy, there shall be no projections into the clear width of doors used for the movement of beds and litter patients in the means of egress.

[Editorial Note: Relocate existing amendments from Section 1010.1.2 to 1010.1.2.1 due to section split.]
1010.1.2.1 Direction of swing. Pivot or side-hinged swinging doors shall swing in the direction of egress travel where serving a room or area containing an occupant load of 50 or more persons or a Group H occupancy. *For Group L occupancies, see Section 453.6.2.*

In a Group I-2 occupancy, all required exterior egress doors shall open in the direction of egress regardless of the occupant load served.

~~1008.1.4.4.1~~1010.1.4.4.1 ***Special provisions school classrooms.*** *School classrooms constructed after January 1, 1990, not equipped with automatic sprinkler systems, which have metal grilles or bars on all their windows and do not have at least two exit doors within 3 feet (914 mm) of each end of the classroom opening to the exterior of the building or to a common hallway used for evacuation purposes, shall have an inside release for the grilles or bars on at least one window farthest from the exit doors. The window or windows with the inside release shall be clearly marked as emergency exits.*

~~1008.1.9.1~~1010.1.9.1 **Hardware.** Door handles, pulls, latches, locks and other operating devices on doors required to be accessible by Chapter 11*A or 11B* shall not require tight grasping, tight pinching or twisting of the wrist to operate.

These design requirements for door handles, pulls, latches, locks and other operating devices, intended for use on required means of egress doors in other than Group R and M occupancies with an occupant load of 10 or less, shall comply with SFM Standard 12-10-2, Section 12-10-202 contained in the CCR, Title 24, Part 12, California Referenced Standards Code.

~~**1010.1.9.6 Controlled egress doors in Groups I-1 and I-2.** Electric locking systems, including electromechanical locking systems and electromagnetic locking systems, shall be permitted to be locked in the means of egress in Group I-1 or I-2 occupancies where the clinical needs of persons receiving care require their containment. Controlled egress doors shall be permitted in such occupancies where the building is equipped throughout with an automatic sprinkler system in accordance with Section 903.3.1.1 or an approved automatic smoke or heat detection system~~

~~installed in accordance with Section 907, provided that the doors are installed and operate in accordance with all of the following:~~
~~1. The door locks shall unlock on actuation of the automatic sprinkler system or automatic fire detection system.~~
~~2. The door locks shall unlock on loss of power controlling the lock or lock mechanism.~~
~~3. The door locking system shall be installed to have the capability of being unlocked by a switch located at the fire command center, a nursing station or other approved location. The switch shall directly break power to the lock.~~
~~4. A building occupant shall not be required to pass through more than one door equipped with a controlled egress locking system before entering an exit.~~
~~5. The procedures for unlocking the doors shall be described and approved as part of the emergency planning and preparedness required by Chapter 4 of the International Fire Code.~~
~~6. All clinical staff shall have the keys, codes or other means necessary to operate the locking systems.~~
~~7. Emergency lighting shall be provided at the door.~~
~~8. The door locking system units shall be listed in accordance with UL 294.~~

~~**Exceptions:**~~
~~1. Items 1 through 4 shall not apply to doors to areas occupied by persons who, because of clinical needs, require restraint or containment as part of the function of a psychiatric treatment area.~~
~~2. Items 1 through 4 shall not apply to doors to areas where a listed egress control system is utilized to reduce the risk of child abduction from nursery and obstetric areas of a Group I-2 hospital.~~
Reserved

1010.1.9.10 ~~**Locking arrangements in correctional facilities.** In occupancies in Groups A-2, A-3, A-4, B, E, F, I-2, I-3, M and S within correctional and detention facilities, doors in means of egress serving rooms or spaces occupied by persons whose movements are controlled for security reasons shall be permitted to be locked where equipped with egress control devices that shall unlock manually and by not less than one of the following means:~~
~~1. Activation of an automatic sprinkler system installed in accordance with Section 903.3.1.1.~~
~~2. Activation of an approved manual fire alarm box.~~
~~3. A signal from a constantly attended location.~~
Reserved.

~~*1008.1.9.12*~~***1010.1.9.12*** ***Access-controlled elevator lobby*** ~~***egress***~~ ***doors in high-rise office buildings.*** *For elevator lobbies in high-rise office buildings where the occupants of the floor are not required to travel through the elevator lobby to reach an exit, when approved by the fire chief, the doors separating the elevator lobby from the adjacent occupied tenant space that also serve as the entrance doors to the tenant space shall be permitted to be equipped with an approved entrance and egress access control provided all of the following requirements are met:*

1. The building is provided throughout with an automatic sprinkler system in accordance with Section 903.3.1.1.
2. A smoke detector is installed on the ceiling on the tenant side of the elevator lobby doors along the center line of the door opening, not less than 1 foot and not more than 5 feet from the door opening, and is connected to the fire alarm system.
3. A remote master switch capable of unlocking the elevator lobby doors shall be provided in the fire command center for use by the fire department.
4. Locks for the elevator lobby shall be U.L. and California State Fire Marshal listed fail-safe type locking mechanisms. The locking device shall automatically release on activation of any fire alarm device on the floor of alarm (waterflow, smoke detector, manual pull stations, etc.). All locking devices shall unlock, but not unlatch, upon activation.
5. A two-way voice communication system, utilizing dedicated lines, shall be provided from each locked elevator lobby to the 24-hour staffed location on site, annunciated as to location. Operating instructions shall be posted above each two-way communication device.

Exception: *When approved by the fire chief, two-way voice communication system to an off-site facility may be permitted where means to remotely unlock the access controlled doors from the off-site facility are provided.*

6. An approved momentary mushroom-shaped palm button connected to the doors and installed adjacent to each locked elevator lobby door shall be provided to release the door locks when operated by an individual in the elevator lobby. The locks shall be reset manually at the door. Mount palm button so that the center line is 48 inches above the finished floor.

Provide a sign stating:

"IN CASE OF EMERGENCY, PUSH PALM BUTTON,
DOOR WILL UNLOCK AND
SECURITY ALARM WILL SOUND."

The sign lettering shall be ¾-inch high letters by 1/8-inch width stroke on a contrasting background.

7. Loss of power to that part of the access control system which locks the doors shall automatically unlock the doors.

~~1008.1.11~~1010.1.11 Group E lockable doors from the inside. *New buildings that are included in public schools (kindergarten through 12th grade) state funded projects and receiving state funding pursuant to Leroy F. Green, School Facilities Act of 1998, California Education Code Sections 17070.10 through 17079, and that are submitted to the Division of the State Architect for plan review after July 1, 2011 in accordance with Education Code 17075.50, shall include locks that allow doors to classrooms and any room with an occupancy of five or more persons to be locked from the inside. The locks shall conform to the specification and requirements found in Section ~~1008.1.9~~ 1010.1.9.*

Exceptions:
1. Doors that are locked from the outside at all times such as, but not limited to, janitor's closet, electrical room, storage room, boiler room, elevator equipment room, and pupil restroom.
2. Reconstruction projects that utilize original plans in accordance with California Administrative Code, Section 4-314.
3. Existing relocatable buildings that are relocated within same site in accordance with California Administrative Code, Section 4-314.

~~1009.7.2~~1011.5.2 Riser height and tread depth. Stair riser heights shall be 7 inches (178 mm) maximum and 4 inches (102 mm) minimum. The riser height shall be measured vertically between the nosings of adjacent treads. Rectangular tread depths shall be 11 inches (279 mm) minimum measured horizontally between the vertical planes of the foremost projection of adjacent treads and at a right angle to the tread's nosing. Winder treads shall have a minimum tread depth of 11 inches (279 mm) between the vertical planes of the foremost projection of adjacent treads at the intersections with the walkline and a minimum tread depth of 10 inches (254 mm) within the clear width of the stair.

Exceptions:
1. Spiral stairways in accordance with Section 1011.10.
2. Stairways connecting stepped aisles to cross aisles or concourses shall be permitted to use the riser/tread dimension in Section 1029.13.2.
3. In Group R-3 occupancies; within dwelling units in Group R-2 occupancies; and in Group U occupancies that are accessory to a Group R-3 occupancy or accessory to individual dwelling units in Group R-2 occupancies; the maximum riser height shall be 73/4 inches (197 mm); the minimum tread depth shall be 10 inches (254 mm); the minimum winder tread depth at the walkline shall be 10 inches (254 mm); and the minimum winder tread depth shall be 6 inches (152 mm). A nosing projection not less than ¾ inch (19.1 mm) but not more than 11/4 inches (32 mm) shall be provided on stairways with solid risers where the tread depth is less than 11 inches (279 mm).
~~6.~~4. ~~See Section 3404.1~~*California Fire Code Chapter 11 and California Existing Building Code* ~~403.1 of the International Existing Building Code~~ for the replacement of existing stairways. ***[DSA-AC]*** *For applications listed in Section 1.9.1 regulated by the Division of the State Architect-Access Compliance, see Chapter 11B, Section 11B-202.*
~~7.~~5. In Group I-3 facilities, stairways providing access to guard towers, observation stations and control rooms, not more than 250 square feet (23 m2) in area, shall be permitted to have a maximum riser height of 8 inches (203 mm) and a minimum tread depth of 9 inches (229 mm).
~~8.~~6. *[SFM] Stairways providing access to lifeguard towers not open to the public, not more than 250 square feet (23 m2) in area, shall be permitted to have a maximum riser height of 8 inches (203 mm) and a minimum tread depth of 9 inches (229 mm).*

~~1009.8~~1011.6 Stairway landings. There shall be a floor or landing at the top and bottom of each stairway. The width of landings shall be not less than the width of stairways served. Every landing shall have a minimum width measured perpendicular to the direction of travel equal to the width of the stairway. Where the stairway has a straight run the depth need not exceed 48 inches (1219 mm). Doors opening onto a landing shall not reduce the landing to less than one-half the required width. When fully open, the door shall not project more than 7 inches (178 mm) into a landing. Where wheelchair spaces are required on the stairway landing in accordance with Section 1009.6.3, the wheelchair space shall not be located in the required width of the landing and doors shall not swing over the wheelchair spaces.

Exceptions:
1. Where stairways connect stepped aisles to cross aisles or concourses, stairway landings are not required at the transition between stairways and stepped aisles constructed in accordance with Section 1029.
2. [SFM] In Group R-3 occupancies a floor or landing is not required at the top of an interior flight of stairs, including stairs in an enclosed garage, provided a door does not swing over the stairs.

~~1009.15~~1011.11 **Handrails.** Stairways shall have handrails on each side and shall comply with Section 1014. Where glass is used to provide the handrail, the handrail shall comply with Section 2407.

Exceptions:
1. Stairways within dwelling units and spiral stairways are permitted to have a handrail on one side only.
2. Decks, patios and walkways that have a single change in elevation where the landing depth on each side of the change of elevation is greater than what is required for a landing do not require handrails.
~~4.~~3. *[SFM]* In Group R-3 occupancies, ~~a change in elevation consisting of a single riser at an entrance or egress door does not require handrails~~ *a continuous run of treads or flight of stairs with less than four risers does not require handrails.*
4. Changes in room elevations of three or fewer risers within dwelling units and sleeping units in Group R-2 and R-3 do not require handrails.

~~1011.1~~1013.1 **Where required.** Exits and exit access doors shall be marked by an approved exit sign readily visible from any direction of egress travel. The path of egress travel to exits and within exits shall be marked by readily visible exit signs to clearly indicate the direction of egress travel in cases where the exit or the path of egress travel is not immediately visible to the occupants. Intervening means of egress doors within exits shall be marked by exit signs. Exit sign placement shall be such that no point in an exit access corridor or exit passageway is more than 100 feet (30 480 mm) or the listed viewing distance for the sign, whichever is less, from the nearest visible exit sign.

Exceptions:
1. Exit signs are not required in rooms or areas that require only one exit or exit access.
2. Main exterior exit doors or gates that are obviously and clearly identifiable as exits need not have exit signs where approved by the building official.
3. Exit signs are not required in occupancies in Group U and individual sleeping units or dwelling units in Group R-1, R-2, ~~or~~ R-3 *or R-3.1.*
4. Exit signs are not required *where inmates are housed, or held* in dayrooms, sleeping rooms or dormitories in occupancies in Group I-3.
5. In occupancies in Groups A-4 and A-5, exit signs are not required on the seating side of vomitories or openings into seating areas where exit signs are provided in the concourse that are readily apparent from the vomitories. Egress lighting is provided to identify each vomitory or opening within the seating area in an emergency.

~~1011.2~~1013.2 **Floor-level exit signs in Group R-1.** ~~Where exit signs are required in Group R-1 occupancies by Section 1013.1, additional low level exit signs shall be provided in all areas serving guest rooms in Group R-1 occupancies and shall comply with Section 1013.5.~~

~~The bottom of the sign shall be not less than 10 inches (254 mm) nor more than 12 inches (305 mm) above the floor level. The sign shall be flush mounted to the door or wall. Where mounted on the wall, the edge of the sign shall be within 4 inches (102 mm) of the door frame on the latch side.~~*See Section ~~1011.7~~ 1013.7*

~~1011.4~~1013.4 **Raised character and braille exit signs.** ~~A sign stating EXIT in visual characters, raised characters and Braille and complying with ICC A117.1 shall be provided adjacent to each door to an area of refuge, an exterior area for assisted rescue, an exit stairway or ramp, an exit passageway and the exit discharge.~~ *Tactile exit signs shall be required at the following locations:*

1. Each grade-level exterior exit door that is required to comply with Section ~~1011.1~~1013.1, shall be identified by a tactile exit sign with the word, "EXIT."
2. Each exit door that is required to comply with Section ~~1011.1~~1013.1, and that leads directly to a grade-level exterior exit by means of a stairway or ramp shall be identified by a tactile exit sign with the following words as appropriate:

2.1. "EXIT STAIR DOWN"

2.2. "EXIT RAMP DOWN"
2.3. "EXIT STAIR UP"
2.4. "EXIT RAMP UP"

3. Each exit door that is required to comply with Section ~~1011.1~~1013.1, and that leads directly to a grade-level exterior exit by means of an exit enclosure or an exit passageway shall be identified by a tactile exit sign with the words, "EXIT ROUTE."
4. Each exit access door from an interior room or area to a corridor or hallway that is required to comply with Section ~~1011.1~~1013.1, shall be identified by a tactile exit sign with the words "EXIT ROUTE."
5. Each exit door through a horizontal exit that is required to comply with Section ~~1011.1~~1013.1, shall be identified by a sign with the words, "TO EXIT."

Raised character and Braille exit signs shall comply with Chapter 11B.

~~1011.7~~1013.7 Floor-level exit signs. *Where exit signs are required by Chapter 10, additional approved low-level exit signs which are internally or externally illuminated photoluminescent or self-luminous, shall be provided in all interior corridors of Group A, E, I and R-2.1 occupancies and in all areas serving guest rooms of hotels in Group R, Division 1 occupancies.*

Exceptions:
1. Group A occupancies that are protected throughout by an approved supervised fire sprinkler system.
2. Group E Occupancies where direct exits have been provided from each classroom.
3. Group I and R-2.1 occupancies which are provided with smoke barriers constructed in accordance with Section 407.5.
4. Group I-3 occupancies.

The bottom of the sign shall not be less than 6 inches (152 mm) or more than 8 inches (203 mm) above the floor level and shall indicate the path of exit travel. For exit and exit-access doors, the sign shall be on the door or adjacent to the door with the closest edge of the sign or marker within 4 inches (102 mm) of the door frame.

Note: Pursuant to Health and Safety Code Section 13143, this California amendment applies to all newly constructed buildings or structures subject to this section for which a building permit is issued (or construction commenced, where no building permit is issued) on or after January 1, 1989.

~~1011.8~~1013.8 Path marking. *When exit signs are required by Chapter 10, in addition to approved floor-level exit signs, approved path marking shall be installed at floor level or no higher than 8 inches (203 mm) above the floor level in all interior rated exit corridors of unsprinklered Group A, R-1 and R-2 occupancies.*

Such marking shall be continuous except as interrupted by door-ways, corridors or other such architectural features in order to provide a visible delineation along the path of travel.

Note: *Pursuant to Health and Safety Code Section 13143, the California amendments of this section shall apply to all newly constructed buildings or structures subject to this section for which a building permit is issued (or construction commenced, where no building permit is issued) on or after January 1, 1989.*

~~1012.8~~1014.8 Projections. On ramps and on ramped aisles that are part of an accessible route, the clear width between handrails shall be 36 inches (914 mm) minimum. Projections into the required width of aisles, stairways and ramps at each side shall not exceed 4 1/2 inches (114 mm) at or below the handrail height. Projections into the required width shall not be limited above the minimum headroom height required in Section 1011.3. Projections due to intermediate handrails shall not constitute a reduction in the egress width. Where a pair of intermediate handrails are provided within the stairway width without a walking surface between the pair of intermediate handrails and the distance between the pair of intermediate handrails is greater than 6 inches (152 mm), the available egress width shall be reduced by the distance between the closest edges of each such intermediate pair of handrails that is greater than 6 inches (152 mm).

In Group I-2 occupancy ramps required for exit access shall not be less than 8 ft in width and handrails are permitted to protrude 31/2 inches from the wall on both sides. Ramps used as exits and stairways used for the movement of bed and litter patients, the clear width between handrails shall be 44 inches (1118 mm) minimum.

[Editorial Note: Remove 2013 CBC amendments to Table 1015.1. It has merged with another table and created 1006.2.1.]

~~TABLE 1015.1~~

~~SPACES WITH ONE EXIT OR EXIT ACCESS DOORWAY~~

~~OCCUPANCY~~	~~MAXIMUM OCCUPANT LOAD~~
~~A, B, E, F, M, U~~	~~49~~
~~H-1, H-2, H-3~~	~~3~~
~~H-4, H-5, I-1/I-2.1, I-3, I-4, R~~	~~10~~
~~S~~	~~29~~
~~L~~	~~See Section 443.6.1~~

~~a. For holding cells, see 408.3.11.~~

[Editorial Note: Remove 2013 CBC amendments to 1015.2 and 1015.2.2. 2015 IBC now addresses. See 1007.]

~~**1015.2** *Exit access doorways, contributing to the total number of exits or exit access doorways required by Sections 1015.1 and 1015.1.1, shall lead to separate exits.*~~

~~**1015.2.2.** *Additional required exit or exit access doorways shall be arranged a reasonable distance apart so that if one becomes, blocked, the others will be available.*~~

[Editorial Note: Remove 2013 CBC amendments to 1016.2.2. CA Amendments matches new model code language located at 1017.2.2.]

~~***1016.2.2 Group F-1 and S-1 Increase.*** *The maximum exit access travel distance shall be 400 feet (122 m) in Group F-1 or S-1 occupancies where all of the following are met:*~~

~~*1. The portion of the building classified as Group F-1 or S-1 is limited to one story in height,*~~

~~*2. The minimum height from the finished floor to the bottom of the ceiling or roof slab or deck is 24 feet (7315 mm), and*~~

~~*3. The building is equipped throughout with an automatic fire sprinkler system in accordance with Section 903.3.1.1.*~~

~~**1013.3**~~**1015.3 Height.** Required guards shall be not less than 42 inches (1067 mm) high, measured vertically as follows:

1. From the adjacent walking surfaces.
2. On stairways and stepped aisles, from the line connecting the leading edges of the tread nosings.
3. On ramps and ramped aisles, from the ramp surface at the guard.

Exceptions:

~~1. For occupancies in Group R-3 not more than three stories above grade in height and within individual dwelling units in occupancies in Group R-2 not more than three stories above grade in height with separate means of egress, required guards shall be not less than 36 inches (914 mm) in height measured vertically above the adjacent walking surfaces or adjacent fixed seating.~~

~~2.~~*1.* For occupancies in Group R-3, and within individual dwelling units in occupancies in Group R-2, guards on the open sides of stairs shall have a height not less than 34 inches (864 mm) measured vertically from a line connecting the leading edges of the treads.

~~3.~~*2.* For occupancies in Group R-3, and within individual dwelling units in occupancies in Group R-2, where the top of the guard also serves as a handrail on the open sides of stairs, the top of the guard shall be not less than 34 inches (864 mm) and not more than 38 inches (965 mm) measured vertically from a line connecting the leading edges of the treads.

~~4.~~*3.* The guard height in assembly seating areas shall comply with Section 1029.16.

~~5.~~*4.* Along alternating tread devices and ships ladders, guards where the top rail also serves as a handrail, shall have height not less than 30 inches (762 mm) and not more than 34 inches (864 mm), measured vertically from the leading edge of the device tread nosing.

~~**1013.4**~~**1015.4 Opening limitations.** Required guards shall not have openings that allow passage of a sphere 4 inches (102 mm) in diameter from the walking surface to the required guard height.

Exceptions:

1. From a height of 36 inches (914 mm) to 42 inches (1067 mm), guards shall not have openings that allow passage of a sphere 43/8 inches (111 mm) in diameter.
2. The triangular openings at the open sides of a stair, formed by the riser, tread and bottom rail shall not allow passage of a sphere 6 inches (152 mm) in diameter.
3. At elevated walking surfaces for access to and use of electrical, mechanical or plumbing systems or equipment, guards shall not have openings that allow passage of a sphere 21 inches (533 mm)in diameter.
4. In areas that are not open to the public within occupancies in Group I-3, F, H or S, and for alternating tread devices and ships ladders, guards shall not have openings that allow passage of a sphere 21 inches (533 mm) in diameter.
5. In assembly seating areas, guards at the end of aisles in accordance with Section 1029.16.4 shall not have openings that allow passage of a sphere 4 inches (102 mm) in diameter up to a height of 26 inches (660 mm). From a height of 26 inches (660 mm) to 42 inches (1067 mm) above the adjacent walking surfaces, guards shall not have openings that allow passage of a sphere 8 inches (203 mm) in diameter.
6. Within individual dwelling units and sleeping units in Group R-2 and R-3 occupancies, guards on the open sides of stairs shall not have openings that allow passage of a sphere 43/8 (111 mm)inches in diameter.
7. In lifeguard towers not open to the public, guards shall not have openings which allow passage of a sphere 21 inches (533 mm) in diameter.

~~1014.2.2~~1016.2.2 Basement exits in Group I-2 occupancies. *For additional requirements for occupancies in Group I-2 or I-2.1, see Sections 407.*

TABLE ~~1016.2~~1017.2
EXIT ACCESS TRAVEL DISTANCE[a]

OCCUPANCY	WITHOUT SPRINKLER SYSTEM (feet)	WITH SPRINKLER SYSTEM (feet)
A, E, F-1, M, R, S-1	200[a]	250[b]
~~I-1~~*R-2.1*	Not Permitted	250[bc]
B	200	300[c]
F-2, S-2, U	300	400[c]
H-1	Not Permitted	75[d]
H-2	Not Permitted	100[d]
H-3	Not Permitted	150[d]
H-4	Not Permitted	175[d]
H-5	Not Permitted	200[d]
I-2, *I-2.1*, I-3[df], I-4	Not Permitted	200[c]
L	*Not Permitted*	*200[c]*

For SI: 1 foot = 304.8 mm.
a. See the following sections for modifications to exit access travel distance requirements:
Section 402.8: For the distance limitation in malls.
Section 404.9: For the distance limitation through an atrium space.
Section 407.4: For the distance limitation in Group I-2 *or I-2.1.*
Section 408.3.10: For increased limitation in Group I-3.
Sections 408.6.1 and 408.8.1: For the distance limitations in Group I-3.
Section 411.4: For the distance limitation in special amusement buildings.
Section 412.7: For the distance limitations in aircraft manufacturing facilities.
Section 1006.2.2.2: For the distance limitation in refrigeration machinery rooms.
Section 1006.2.2.3: For the distance limitation in refrigerated rooms and spaces.
Section 1006.3.2: For buildings with one exit.
~~*Section 1016.2.2: For increased limitation in Groups F-1 and S-1.*~~
Section 1017.2.2: For increased distance limitation in Groups F-1 and S-1.
Section 1029.7: For increased limitation in assembly seating.
Section 3103.4: For temporary structures.
Section 3104.9: For pedestrian walkways.

b. Buildings equipped throughout with an automatic sprinkler system in accordance with Section 903.3.1.1 or 903.3.1.2. See Section 903 for occupancies where automatic sprinkler systems are permitted in accordance with Section 903.3.1.2.
c. Buildings equipped throughout with an automatic sprinkler system in accordance with Section 903.3.1.1
d. Group H occupancies equipped throughout with an automatic sprinkler system in accordance with Section 903.2.5.1.
e. Group R-3 and R-4 buildings equipped throughout with an automatic sprinkler system in accordance with Section 903.3.1.3. See Section 903.2.8 for occupancies where automatic sprinkler systems are permitted in accordance with Section 903.3.1.3.
~~d.~~f. Not permitted in nonsprinklered Group I-3 Occupancies.

1019.3 Occupancies other than Groups I-2, *I-2.1,* ~~and~~ I-3*, and R-2.1*. In other than Group I-2, *I-2.1,* ~~and~~ I-3*, and R-2.1* occupancies, floor openings containing exit access stairways or ramps that do not comply with one of the conditions listed in this section shall be enclosed with a shaft enclosure constructed in accordance with Section 713.
1. Exit access stairways and ramps that serve or atmospherically communicate between only two stories. Such interconnected stories shall not be open to other stories.
2. In Group R-1, R-2*, R-2.1,* ~~or~~ R-3 *or R-3.1* occupancies, exit access stairways and ramps connecting four stories or less serving and contained within an individual dwelling unit or sleeping unit or live/work unit.
3. Exit access stairways serving and contained within a Group R-3 congregate residence or a Group R-4 facility are not required to be enclosed.
4. Exit access stairways and ramps in buildings equipped throughout with an automatic sprinkler system in accordance with Section 903.3.1.1, where the area of the vertical opening between stories does not exceed twice the horizontal projected area of the stairway or ramp and the opening is protected by a draft curtain and closely spaced sprinklers in accordance with NFPA 13. In other than Group B and M occupancies, this provision is limited to openings that do not connect more than four stories.
5. Exit access stairways and ramps within an atrium complying with the provisions of Section 404.
6. Exit access stairways and ramps in open parking garages that serve only the parking garage.
7. Exit access stairways and ramps serving open-air seating complying with the exit access travel distance requirements of Section 1029.7.
8. Exit access stairways and ramps serving the balcony, gallery or press box and the main assembly floor in occupancies such as theaters, places of religious worship, auditoriums and sports facilities.
9. Fixed guideway transit stations, constructed in accordance with Section 443.

1019.4 Group I-2, *I-2.1,* ~~and~~ I-3*, and R-2.1*occupancies. In Group I-2, *I-2.1,* ~~and~~ I-3*, and R-2.1* occupancies, floor openings between stories containing exit access stairways or ramps are required to be enclosed with a shaft enclosure constructed in accordance with Section 713.

Exception: In Group I-3 occupancies, exit access stairways or ramps constructed in accordance with Section 408 are not required to be enclosed.

TABLE ~~1018.1~~ 1020.1
CORRIDOR FIRE-RESISTANCE RATING

OCCUPANCY	OCCUPANT LOAD SERVED BY CORRIDOR	REQUIRED FIRE-RESISTANCE RATING (hours)	
		Without sprinkler system	With sprinkler system[c]
H-1, H-2, H-3	All	Not Permitted	1
H-4, H-5 , *L*	Greater than 30	Not Permitted	1
A[d], B, F, M, S, U	Greater than 30	1	0
R-*1, R-2, R-3, R-3.1, R-4*	Greater than 10	~~Not Permitted~~*1*[d]	~~0.5~~*1*
I-2[a], *I-2.1*, I-4	~~All~~ *Greater than 6*	Not Permitted	*1*
~~I-1,~~ I-3, *R-2.1*	~~All~~ *Greater than 6*	Not Permitted	1[b]
E	*Greater than 10*	*1*	*1*

a. For requirements for occupancies in Group I-2 *and I-2.1*, see Sections 407.2 and 407.3.
b. For a reduction in the fire-resistance rating for occupancies in Group I-3, see Sections *408.1.2 and* 408.8.
c. Buildings equipped throughout with an automatic sprinkler system in accordance with Section 903.3.1.1 or 903.3.1.2 where allowed.

d. Group R-3 and R-4 buildings equipped throughout with an automatic sprinkler system in accordance with Section 903.3.1.3. See Section 903.2.8 for
occupancies where automatic sprinkler systems are permitted in accordance with Section 903.3.1.3.
f. [SFM] See Section ~~1028~~1029.

TABLE ~~1018.2~~1020.2
MINIMUM CORRIDOR WIDTH

OCCUPANCY	WIDTH (minimum)
Any facilities not listed below	44 inches
Access to and utilization of mechanical, plumbing or electrical systems or equipment	24 inches
With an occupant load of less than 50	36 inches
Within a dwelling unit	36 inches
In Group E with a corridor having an occupant load of 100 or more	72 inches
In corridors and areas serving stretcher traffic in ambulatory care facilities	72 inches
Group I-2 in areas where required for bed movement	96 inches
Corridors in Group I-2 and I-3 occupancies serving any area caring for one or more nonambulatory persons.	96 inches

For SI: 1 inch = 25.4 mm.

~~1018.4~~1020.4 Dead ends. Where more than one exit or exit access doorway is required, the exit access shall be arranged such that there are no dead ends in corridors more than 20 feet (6096 mm) in length.

Exceptions:
1. In occupancies in Group I-3 of Condition 2, 3 or 4, the dead end in a corridor shall not exceed 50 feet (15 240 mm).
2. In occupancies in Groups B, E, F, ~~I-1,~~ M, R-1, R-2, *R-2.1,* R-4, S and U, where the building is equipped throughout with an automatic sprinkler system in accordance with Section 903.3.1.1, the length of the dead-end corridors shall not exceed 50 feet (15 240 mm).
3. A dead-end corridor shall not be limited in length where the length of the dead-end corridor is less than 2.5 times the least width of the dead-end corridor.

~~1018.5~~1020.5 Air movement in corridors. Corridors shall not serve as supply, return, exhaust, relief or ventilation air ducts.

Exceptions:
1. Use of a corridor as a source of makeup air for exhaust systems in rooms that open directly onto such corridors, including toilet rooms, bathrooms, dressing rooms~~, smoking lounges~~ and janitor closets, shall be permitted, provided that each such corridor is directly supplied with outdoor air at a rate greater than the rate of makeup air taken from the corridor.
2. Where located within a dwelling unit, the use of corridors for conveying return air shall not be prohibited.
3. Where located within tenant spaces of 1,000 square feet (93 m^2) or less in area, utilization of corridors for conveying return air is permitted.
4. Incidental air movement from pressurized rooms within health care facilities, provided that the corridor is not the primary source of supply or return to the room.
5. For health care facilities under the jurisdiction of the Office of Statewide Health Planning and Development (OSHPD), see the California Mechanical Code.

~~1018.5.1~~1020.5.1 Corridor ceiling. Use of the space between the corridor ceiling and the floor or roof structure above as a return air plenum is permitted for one or more of the following conditions:

1. The corridor is not required to be of fire-resistance-rated construction.
2. The corridor is separated from the plenum by fire-resistance-rated construction.

3. The air-handling system serving the corridor is shut down upon activation of the air-handling unit smoke detectors required by the ~~*International*~~*California Mechanical Code*.
4. The air-handling system serving the corridor is shut down upon detection of sprinkler water flow where the building is equipped throughout with an automatic sprinkler system.
5. The space between the corridor ceiling and the floor or roof structure above the corridor is used as a component of an approved engineered smoke control system.

~~**1018.6**~~**1020.6 Corridor continuity.** Fire-resistance-rated corridors shall be continuous from the point of entry to an *exit*, and shall not be interrupted by intervening rooms. Where the path of egress travel within a fire-resistance-rated corridor to the exit includes travel along unenclosed exit access stairways or ramps, the fire resistance-rating shall be continuous for the length of the stairway or ramp and for the length of the connecting corridor on the adjacent floor leading to the exit.

Exceptions:
1. Foyers, lobbies or reception rooms constructed as required for *corridors* shall not be construed as intervening rooms.
2. Enclosed elevator lobbies as permitted by Item 1 of Section 1016.2 shall not be construed as intervening rooms.
~~2.~~*3. [SFM] In fully sprinklered office buildings, corridors may lead through enclosed elevator lobbies if all areas of the building have access to at least one required exit without passing through the elevator lobby.*

[Editorial Note: Remove 2013 CBC amendments to 1021.1. CA Amendments relocated to 1006.3 or covered with model code language in 1006.3.1.]
1021.1 ~~**General.** Each story and occupied roof shall have the minimum number of *independent* exits, or access to exits, as specified in this section *Table 1021.1. A single exit or access to a single exit shall be permitted in accordance with Section 1021.2.* The required number of exits, or exit access stairways or ramps providing access to exits, from any story shall be maintained until arrival at grade or a public way. Exits or access to exits from any story shall be configured in accordance with this section. Each story above the second story of a building shall have a minimum of one interior or exterior exit stairway, or interior or exterior exit ramp. At each story above the second story that requires a minimum of three or more exits, or access to exits, a minimum of 50 percent of the required exits shall be interior or exterior exit stairways, or interior or exterior exit ramps.~~

~~**Exceptions:**~~
~~1. Interior exit stairways and interior exit ramps are not required in open parking garages where the means of egress serves only the open parking garage.~~
~~2. Interior exit stairways and interior exit ramps are not required in outdoor facilities where all portions of the means of egress are essentially open to the outside.~~

[Editorial Note: Remove existing amendments to Table 1021:1. Model code Table has been removed and relocated and amendment no longer applies.]

~~**TABLE 1021.1**~~
~~***MINIMUM NUMBER OF EXITS OR ACCESS TO EXITS PER STORY***~~

~~*Occupant Load per Story*~~	~~*Minimum Number of Exits or Access to Exits From Story*~~
~~*1-500*~~	~~*2*~~
~~*501-1,000*~~	~~*3*~~
~~*More than 1,000*~~	~~*4*~~

[Editorial Note: Remove 2013 CBC amendments to 1021.2. CA Amendments relocate to more appropriate section. See 1006.3.2.]
~~**1021.2 *Single* exits from stories.** *A single exit or access to a single exit shall be permitted* Two exits, or exit access stairways or ramps providing access to exits, from any story or occupied roof, shall be provided where one of the following conditions exists:~~

~~1. The occupant load, or number of dwelling units *and exit access travel distance does not* exceed one of the values in Table 1021.2(1) or 1021.2(2).~~

~~2. The exit access travel distance exceeds that specified in Table 1021.2(1) or 1021.2(2) as determined in accordance with the provisions of Section 1016.1.~~
~~3. Helistop landing areas located on buildings or structures shall be provided with two exits, or exit access stairways or ramps providing access to exits. s one of the values in Table 1021.2(1) or 1021.2(2).~~
~~**Exceptions:**~~
~~12. Rooms, areas and spaces complying with Section 1015.1 with exits that discharge directly to the exterior at the level of exit discharge, are permitted to have one exit *or access to a single exit.*~~
~~23. Group R-3 occupancy buildings shall be permitted to have one exit *where each individual story complies with Table 1021.2(1).*~~
~~34. Parking garages where vehicles are mechanically parked shall be permitted to have one exit *or access to a single exit.*~~
~~4. Air traffic control towers shall be provided with the minimum number of exits specified in Section 412.3.~~
~~5. Individual dwelling units in compliance with Section 1021.2.3.~~
~~65. Group R-3 and R-4 congregate residences shall be permitted to have one exit *where each individual story complies with Table 1021.2(1) or 1021.2(2).*~~

[Editorial Note: Remove section 1021.2.2. Model code was also removed from the 2012 IBC (section 1021.2.2)]
~~***1021.2.2 Exits from specific space.*** *Exits serving specific spaces or areas need not be accessed by the remainder of the story when all of the following are met:*~~

~~*1. The number of exits from the entire story complies with Section 1021.4.1 1021.1;*~~
~~*2. The access to exits from each individual space in the story complies with Section* 1015.1*; and*~~
~~*3. All spaces within each portion of a story shall have access to the minimum number of approved independent exits based on the occupant load of that portion of the story but not less than two exits.*~~

~~1022.2~~**1023.2 Construction.** Enclosures for interior exit stairways and ramps shall be constructed as fire barriers in accordance with Section 707 or horizontal assemblies constructed in accordance with Section 711, or both. Interior exit stairway and ramp enclosures shall have a fire-resistance rating of not less than 2 hours where connecting four stories or more and not less than 1 hour where connecting less than four stories. The number of stories connected by the interior exit stairways or ramps shall include any basements, but not any mezzanines. Interior exit stairways and ramps shall have a fire-resistance rating not less than the floor assembly penetrated, but need not exceed 2 hours.

Exceptions~~s~~:
1. Interior exit stairways and ramps in Group I-3 occupancies in accordance with the provisions of Section 408.3.8.
2. Interior exit stairways within an atrium enclosed in accordance with Section 404.6.
~~2.~~*3. Fixed guideway transit stations, constructed in accordance with Section ~~433~~443.*

~~1022.9~~**1023.9 Stairway identification signs.** A sign shall be provided at each floor landing in an interior exit stairway and ramp connecting more than three stories designating the floor level, the terminus of the top and bottom of the interior exit stairway and ramp and the identification of the stairway or ramp. The signage shall also state the story of, and the direction to, the exit discharge and the availability of roof access from the interior exit stairway and ramp for the fire department. The sign shall be located 5 feet (1524 mm) above the floor landing in a position that is readily visible when the doors are in the open and closed positions. ~~In addition to the stairway identification sign, a floor level sign in raised characters and braille complying with ICC A117.1 shall be located at each floor level landing adjacent to the door leading from the interior exit stairway and ramp into the corridor to identify the floor level.~~

In addition to the stairway identification sign, raised characters and braille floor identification signs that comply with Chapter 11B shall be located at the landing of each floor level, placed adjacent to the door on the latch side, in all enclosed stairways in buildings two or more stories in height to identify the floor level. At the exit discharge level, the sign shall include a raised five pointed star located to the left of the identifying floor level. The outside diameter of the star shall be the same as the height of the raised characters.

~~1022.9.1~~**1023.9.1 Signage requirements.** Stairway identification signs shall comply with all of the following requirements:

1. The signs shall be a minimum size of 18 inches (457 mm) by 12 inches (305 mm).
2. The letters designating the identification of the interior exit stairway and ramp, *such as STAIR NO. 1 or WEST STAIR, shall be placed at the top of the sign and* shall be not less than 11/2 inches (38 mm) in height *block lettering with 1/4-inch (6 mm) strokes.*

3. The number designating the floor level shall be not less than 5 inches (127 mm) in height *with 3/4-inch (19 mm) strokes* and located in the center of the sign. *The mezzanine levels shall have the letter "M" preceding the floor level. Basement levels shall have the letter "B" preceding the floor number.*
4. Other lettering and numbers shall be not less than 1 inch (25 mm) in height.
5. The stairway's upper terminus, such as ROOF ACCESS or NO ROOF ACCESS, shall be placed under the stairway identification in 1-inch-high (25 mm) block lettering with 1/4-inch (6 mm) strokes.
6. The lower and upper terminus of the stairway shall be placed at the bottom of the sign in 1-inch-high (25 mm) block lettering with 1/4-inch (6 mm) strokes.
~~5.~~*7.* Characters and their background shall have a nonglare finish. Characters shall contrast with their background, with either light characters on a dark background or dark characters on a light background.
6.8. Where signs required by Section 1023.9 are installed in the interior exit stairways and ramps of buildings subject to Section 1025, the signs shall be made of the same materials as required by Section 1025.4.

[Editorial Note: 2013 CBC amendments no longer necessary for Section 1023.11.]
~~1022.10~~**1023.11 Smokeproof enclosures.** Where required by Section 403.5.4 or 405.7.2, interior exit stairways and ramps shall be smokeproof enclosures in accordance with Section 909.20.

[Editorial Note: 2013 CBC amendments no longer necessary for Section 1023.11.1.]
~~1022.10.1~~**1023.11.1 Termination and extension.** A smokeproof enclosure shall terminate at an exit discharge or a public way. The smokeproof enclosure shall be permitted to be extended by an exit passageway in accordance with Section 1023.3. The exit passageway shall be without openings other than the fire door assembly required by Section 1023.3.1 and those necessary for egress from the exit passageway. The exit passageway shall be separated from the remainder of the building by 2-hour fire barriers constructed in accordance with Section 707 or horizontal assemblies constructed in accordance with Section 711, or both.

Exceptions:
1. Openings in the exit passageway serving a smokeproof enclosure are permitted where the exit passageway is protected and pressurized in the same manner as the smokeproof enclosure, and openings are protected as required for access from other floors.
2. The fire barrier separating the smokeproof enclosure ~~or pressurized stairway~~ from the exit passageway is not required, provided the exit passageway is protected and pressurized in the same manner as the smokeproof enclosure.
3. A smokeproof enclosure shall be permitted to egress through areas on the level of discharge or vestibules as permitted by Section 1027.

~~1022.10.2~~**1023.11.2 Enclosure access.** Access to the stairway or ramp within a smokeproof enclosure shall be by way of a vestibule or an open exterior balcony.

~~**Exception:** Access is not required by way of a vestibule or exterior balcony for stairways and ramps using the pressurization alternative complying with Section 909.20.5.~~

~~1023.2~~**1024.2 Width.** The required capacity of exit passageways shall be determined as specified in Section 1005.1 but the minimum width shall be not less than 44 inches (1118 mm), except that exit passageways serving an occupant load of less than 50 shall be not less than 36 inches (914 mm) in width. The minimum width or required capacity of exit passageways shall be unobstructed.

Exception: Encroachments complying with Section 1005.7

The clear width of exit passageways in a Group I-2 occupancy used for the movement of beds and litters shall be 44-inch (1118) minimum.

[Editorial Note: 2013 CBC amendments for Section 1026.4 relocated to 1026.4.2]
~~1025.4~~**1026.4 Refuge area.** The refuge area of a horizontal exit shall be a space occupied by the same tenant or a public area and each such refuge area shall be adequate to accommodate the original occupant load of the refuge area plus the occupant load anticipated from the adjoining compartment. The anticipated occupant load from the adjoining compartment shall be based on the capacity of the horizontal exit doors entering the refuge area.

~~1027.1~~**1028.1 General.** Exits shall discharge directly to the exterior of the building. The exit discharge shall be at grade or shall provide a ~~a~~ direct path of egress travel ~~*path of egress travel*~~ to grade. The exit discharge shall not

reenter a building. The combined use of Exceptions 1 and 2 shall not exceed 50 percent of the number and capacity of the required exits.

Exceptions:
1. Not more than 50 percent of the number and minimum width or required capacity of interior exit stairways and ramps is permitted to egress through areas on the level of discharge provided all of the following conditions are met:
1.1. Discharge of interior exit stairways and ramps shall be provided with a free and unobstructed path of travel to an exterior exit door and such exit is readily visible and identifiable from the point of termination of the enclosure.
1.2. The entire area of the level of exit discharge is separated from areas below by construction conforming to the fire-resistance rating for the enclosure.
1.3. The egress path from the interior exit stairway and ramp on the level of exit discharge is protected throughout by an approved automatic sprinkler system. Portions of the level of exit discharge with access to the egress path shall be either equipped throughout with an automatic sprinkler system installed in accordance with Section 903.3.1.1 or 903.3.1.2, or separated from the egress path in accordance with the requirements for the enclosure of interior exit stairways or ramps.
1.4. Where a required interior exit stairway or ramp and an exit access stairway or ramp serve the same floor level and terminate at the same level of exit discharge, the termination of the exit access stairway or ramp and the exit discharge door of the interior exit stairway or ramp shall be separated by a distance of not less than 30 feet (9144 mm) or not less than one-fourth the length of the maximum overall diagonal dimension of the building, whichever is less. The distance shall be measured in a straight line between the exit discharge door from the interior exit stairway or ramp and the last tread of the exit access stairway or termination of slope of the exit access ramp.

2. Not more than 50 percent of the number and minimum width or required capacity of the interior exit stairways and ramps is permitted to egress through a vestibule provided all of the following conditions are met:
2.1. The entire area of the vestibule is separated from areas below by construction conforming to the fire-resistance rating of the interior exit stairway or ramp enclosure.
2.2. The depth from the exterior of the building is not greater than 10 feet (3048 mm) and the length is not greater than 30 feet (9144 mm).
2.3. The area is separated from the remainder of the level of exit discharge by a fire partition constructed in accordance with Section 708.

Exception: The maximum transmitted temperature rise is not required.

2.4. The area is used only for means of egress and exits directly to the outside.

3. Horizontal exits complying with Section 1026 shall not be required to discharge directly to the exterior of the building.

~~1027.5~~1028.5 **Access to a public way.** The exit discharge shall provide a direct and unobstructed access to a public way.

Exception: Where access to a public way cannot be provided, a safe dispersal area shall be provided where all of the following are met:

1. The area shall be of a size to accommodate not less than 5 square feet (0.46 m^2) for each person.
2. *For other than Group E buildings,* the area shall be located on the same lot not less than 50 feet (15 240 mm) away from the building requiring egress. *For Group E buildings, the area shall be located on the same lot at least 50 feet (15 240 mm) away from any building.*
3. The area shall be permanently maintained and identified as a safe dispersal area.
4. The area shall be provided with a safe and unobstructed path of travel from the building.

1029.1 General. A room or space used for assembly purposes that contains seats, tables, displays, equipment or other material shall comply with this section.

Exception: *Group A occupancies within Group I-3 facilities are exempt from egress requirements of 1028.*

~~1028.2~~1029.2 **Assembly main exit.** A building, room or space used for assembly purposes that has an occupant load of greater than 300 and is provided with a main exit, that main exit shall be of sufficient capacity to

accommodate not less than one half of the occupant load, but such capacity shall be not less than the total required capacity of all means of egress leading to the exit. Where the building is classified as a Group A occupancy, the main exit shall front on not less than one street or an unoccupied space of not less than ~~10 feet (3048 mm)~~ *20 feet (6096 mm)* in width that adjoins a street or public way. In a building, room or space used for assembly purposes where there is not a well-defined main exit or where multiple main exits are provided, exits shall be permitted to be distributed around the perimeter of the building provided that the total capacity of egress is not less than 100 percent of the required capacity *and ~~at least~~not less than one exit shall discharge on a street or an unoccupied space of not less than 20 feet (6096 mm)in ~~width~~capacity that adjoins a street or publicway. Smoke-protected seating shall comply with Section ~~1028.6.2~~1029.6.2.*

~~1028.3~~1029.3 Assembly other exits. In addition to having access to a main exit, each level in a building used for assembly purposes having an occupant load greater than 300 and provided with a main exit, shall be provided with additional means of egress that shall provide an egress capacity for not less than one-half of the total occupant load served by that level and shall comply with Section 1007.1. *~~At least~~Not less than one-half of the additional means of egress required by this section shall be directly to an exit, or through a lobby, that is not used to access the main exit, to an exit, or to a one hour rated corridor to an exit.* In a building used for assembly purposes where there is not a well-defined main exit or where multiple main exits are provided, exits for each level shall be permitted to be distributed around the perimeter of the building, provided that the total width of egress is not less than 100 percent of the required width *and ~~at least~~not less than one exit shall discharge on a street or an unoccupied space of not less than 20 feet (6096 mm) in ~~width~~capacity that adjoins a street or publicway.Smoke-protected seating shall_complying with Section ~~1028.6.2~~1029.6.2.*

~~1028.3.1~~1029.3.1 Occupant loads 300 or less. *Group A occupancies or assembly occupancies accessory to Group E occupancies that have an occupant load of 100 or more and 300 or less, shall have ~~at least~~not less than one of the required means of egress directly to an exit, or through a lobby, that is not used to access the other required exit, to an exit, or to a one-hour rated corridor to an exit or continuous through a one-hour rated lobby to an exit. ~~At least~~Not less than one exit shall discharge on a street or an unoccupied space of not less than 20 feet (6096 mm) in ~~width~~capacity that adjoins a street or public way.*

~~1028.6.4~~1029.6.4 Public address system. *See section 907.2.1.3.*

~~1028.9.1~~1029.9.1 Minimum aisle width. The minimum clear width for aisles shall comply with one of the following:
1. Forty-eight inches (1219 mm) for stepped aisles having seating on each side.

Exception: Thirty-six inches (914 mm) where the stepped aisles serve less than 50 seats.

2. Thirty-six inches (914 mm) for stepped aisles having seating on only one side.

Exception: Twenty-three inches (584 mm) between an aisle stair handrail and seating where a stepped aisle does not serve more than five rows on one side.

3. Twenty-three inches (584 mm) between a stepped aisle handrail or guard and seating where the stepped aisle is subdivided by a mid-aisle handrail.
4. Forty-two inches (1067 mm) for level or ramped aisles having seating on both sides.

Exceptions:
1. Thirty-six inches (914 mm) where the aisle serves less than 50 seats.
2. Thirty inches (762 mm) where the aisle does not serve more than 14 seats.

5. Thirty-six inches (914 mm) for level or ramped aisles having seating on only one side.

Exception: For other than ramped aisles that serve as part of an accessible route, 30 inches (762 mm) where the ramped aisle does not serve more than 14 seats.

6. Libraries with open book stacks shall have main aisles not less than 44 inches (1118 mm) in width, and side, range and end aisles not less than 36 inches (914 mm) in width.

~~1029.1~~1030.1 **General.** In addition to the means of egress required by this chapter, provisions shall be made for emergency escape and rescue openings in Group R-~~2~~ occupancies ~~in accordance with Tables 1006.3.2(1) and 1006.3.2(2) and Group R-3 occupancies~~. Basements and sleeping rooms below the fourth story above grade plane shall have at least one exterior emergency escape and rescue opening in accordance with this section. Where basements contain one or more sleeping rooms, emergency escape and rescue openings shall be required in each sleeping room, but shall not be required in adjoining areas of the basement. Such openings shall open directly into a public way or to a yard or court that opens to a public way.

Exceptions:
1. In Groups R-1 and R-2 occupancies constructed of Type I, Type IIA, Type IIIA or Type IV construction equipped throughout with an approved automatic sprinkler system in accordance with Section 903.3.1.1
~~1.~~ 2. Basements with a ceiling height of less than 80 inches (2032 mm) shall not be required to have emergency escape and rescue openings.
~~2.~~3. Emergency escape and rescue openings are not required from basements or sleeping rooms that have an exit door or exit access door that opens directly into a public way or to a yard, court or exterior exit balcony that opens to a public way.
~~3.~~4. Basements without habitable spaces and having not more than 200 square feet (18.6 m2) in floor area shall not be required to have emergency escape and rescue openings.

~~1029.4~~1030.4 **Operational constraints.** Emergency escape and rescue openings *and any exit doors* shall be *maintained free of any obstructions other than those allowed by this section and shall be* operational from the inside of the room ~~without the use of keys or tools~~. Bars, grilles, grates or similar devices are permitted to be placed over emergency escape and rescue openings provided the minimum net clear opening size complies with Section 1030.2 and such devices shall be releasable or removable from the inside without the use of a key, tool, *special knowledge or effort* or force greater than that which is required for normal operation of the emergency escape and rescue opening. Where such bars, grilles, grates or similar devices are installed *in existing buildings*, smoke alarms shall be installed in accordance with Section 907.2.11 regardless of the valuation of the alteration. *The release mechanism shall be maintained operable at all times.*

Such bars, grills, grates or any similar devices shall be equipped with an approved exterior release device for use by the fire department only when required by the authority having jurisdiction.

Where security bars (burglar bars) are installed on emergency egress and rescue windows or doors, on or after July 1, 2000, such devices shall comply with California Building Standards Code, Part 12, Chapter 12-3 and other applicable provisions of Part 2.

Exception: *Group R-1 occupancies provided with a monitored fire sprinkler system in accordance with Section 903.2.8 and designed in accordance with NFPA 13 may have openable windows permanently restricted to a maximum 4-inch (102 mm) open position.*

~~**CHAPTER 11**~~
~~**ACCESSIBILITY**~~

(Note: Chapter 11 will not be printed in the California Building Code.)

CHAPTER 12
INTERIOR ENVIRONMENT

1203.1 General. Buildings shall be provided with natural ventilation in accordance with Section 1203.4, or mechanical ventilation in accordance with the ~~*International*~~*California Mechanical Code*.

Where the air infiltration rate in a dwelling unit is less than 5 air changes per hour when tested with a blower door at a pressure 0.2 inch w.c. (50 Pa) in accordance with ~~Section 402.4.1.2 of~~ the ~~*International*~~*California Energy* ~~*Conservation*~~ *Code*- Residential Provisions, the dwelling unit shall be ventilated by mechanical means in accordance with Section 403 of the ~~*International*~~*California Mechanical Code*. Ambulatory care facilities and Group I-2 occupancies shall be ventilated by mechanical means in accordance with Section 407 of the ~~*International*~~*California* Mechanical Code.

1203.2.1 Openings into attic. Exterior openings into the attic space of any building intended for human occupancy shall be protected to prevent the entry of birds, squirrels, rodents, snakes and other similar creatures. Openings for ventilation having a least dimension of not less than 1/16 inch (1.6 mm) and not more than 1/4 inch (6.4 mm) shall be permitted. Openings for ventilation having a least dimension larger than 1/4 inch (6.4 mm) shall be provided with corrosion-resistant wire cloth screening, hardware cloth, perforated vinyl or similar material with openings having a least dimension of not less than 1/16 inch (1.6 mm) and not more than 1/4 inch (6.4 mm). Where combustion air is obtained from an attic area, it shall be in accordance with Chapter 7 of the ~~*International*~~*California Mechanical Code*.

1203.4.2 Exceptions. The following are exceptions to Sections 1203.4 and 1203.4.1:

1. Where warranted by climatic conditions, ventilation openings to the outdoors are not required if ventilation openings to the interior are provided.
2. The total area of ventilation openings is permitted to be reduced to 1/1,500 of the under-floor area where the ground surface is covered with a Class I vapor retarder material and the required openings are placed so as to provide cross ventilation of the space. The installation of operable louvers shall not be prohibited.
3. Ventilation openings are not required where continuously operated mechanical ventilation is provided at a rate of 1.0 cubic foot per minute (cfm) for each 50 square feet (1.02 L/s for each 10 m2) of crawlspace floor area and the ground surface is covered with a Class I vapor retarder.
4. Ventilation openings are not required where the ground surface is covered with a Class I vapor retarder, the perimeter walls are insulated and the space is conditioned in accordance with the ~~*International*~~*California Energy* ~~*Conservation*~~ *Code*.
5. For buildings in flood hazard areas as established in Section 1612.3, the openings for under-floor ventilation shall be deemed as meeting the flood opening requirements of ASCE 24 provided that the ventilation openings are designed and installed in accordance with ASCE 24.

1203.5.2 Contaminants exhausted. Contaminant sources in naturally ventilated spaces shall be removed in accordance with the ~~*International*~~*California Mechanical Code* and the ~~*International*~~*California Fire Code*.

1203.5.2.1 Bathrooms. Rooms containing bathtubs, showers, spas and similar bathing fixtures shall be mechanically ventilated in accordance with the ~~*International*~~*California Mechanical Code*.

1203.6 Other ventilation and exhaust systems. Ventilation and exhaust systems for occupancies and operations involving flammable or combustible hazards or other contaminant sources as covered in the ~~*International*~~*California Mechanical Code* or the ~~*International*~~*California Fire Code* shall be provided as required by both codes.

1205.4.1 Controls. The control for activation of the required stairway lighting shall be in accordance with *the* ~~NFPA 70~~*California Electrical Code*.

1206.3.3 Court drainage. The bottom of every *court* shall be properly graded and drained to a public sewer or other approved disposal system complying with the ~~*International*~~*California Plumbing Code*.

1209.3 Mechanical appliances. Access to mechanical appliances installed in under-floor areas, in attic spaces and on roofs or elevated structures shall be in accordance with the ~~*International*~~*California Mechanical Code*.

CHAPTER 15
ROOF ASSEMBLIES AND ROOFTOP STRUCTURES

1503.4 Roof drainage. Design and installation of roof drainage systems shall comply with Section 1503 of this code and Sections 1106 and 1108, as applicable, of the ~~*International*~~*California Plumbing Code*.

TABLE 1505.1[a, ~~b~~]
MINIMUM ROOF COVERING CLASSIFICATION
FOR TYPES OF CONSTRUCTION

IA	IB	IIA	IIB	IIIA	IIIB	IV	VA	VB
B	B	B	C[~~c~~]	B	C[~~c~~]	B	B	C[~~c~~]

For SI: 1 foot = 304.8 mm, 1 square foot = 0.0929m2.

a. Unless otherwise required in accordance with *Chapter 7A*. ~~the *International Wildland-Urban Interface Code* or due to the location of the building within a fire district in accordance with Appendix D.~~
~~b. Nonclassified roof coverings shall be permitted on buildings of Group R-3 and Group U occupancies, where there is a minimum fire separation distance of 6 feet measured from the leading edge of the roof.~~
~~c. Buildings that are not more than two stories above grade plan and having not more than 6,000 square feet of projected roof area and where there is a minimum 10 foot fire separation distance from the leading edge of the roof to a lot line on all sides of the building, except for street fronts or public ways, shall be permitted to have roofs of No. 1 cedar or redwood shakes and No. 1 shingles construed in accordance with Section 1505.7.~~

1505.1.1 Roof coverings within very high fire hazard severity zones. *The entire roof covering of every existing structure where more than 50 percent of the total roof area is replaced within any one-year period, the entire roof covering of every new structure, and any roof covering applied in the alteration, repair or replacement of the roof of every existing structure, shall be a fire-retardant roof covering that is at least Class A.*

Exception: *The requirements shall not apply in any jurisdiction that adopts the model ordinance approved by the State Fire Marshal pursuant to Section 51189 of the Government Code or an ordinance that substantially conforms to the model ordinance and transmits a copy to the State Fire Marshal.*

1505.1.2 Roof coverings within state responsibility areas. *The entire roof covering of every existing structure where more than 50 percent of the total roof area is replaced within any one-year period, the entire roof covering of every new structure and any roof covering applied in the alteration, repair or replacement of the roof of every existing structure shall be a fire-retardant roof covering that is at least Class B.*

Exception: *Areas designated as moderate fire hazard severity zones.*

1505.1.3 Roof coverings within all other areas. *The entire roof covering of every existing structure where more than 50 percent of the total roof area is replaced within any one-year period, the entire roof covering of every new structure, and any roof covering applied in the alteration, repair or replacement of the roof of every existing structure, shall be a fire-retardant roof covering that is at least Class C.*

1505.1.4 Roofing requirements in a Wildland-Urban Interface Fire Area. *Roofing requirements for structures located in a Wildland-Urban Interface Fire Area shall also comply with Section 705A.*

1505.6 Fire-retardant-treated wood shingles and shakes. Fire-retardant-treated wood shakes and shingles ~~shall be treated by impregnation with chemicals by the fullcell vacuum-pressure process, in accordance with AWPA C1. Each bundle shall be marked to identify the manufactured unit and the manufacturer, and shall also be labeled to identify the classification of the material in accordance with the testing required in Section 1505.1, the treating company and the quality control agency.~~ *are wood shakes and shingles complying with UBC Standard 15-3 or 15-4 which are impregnated by the full-cell vacuum-pressure process with fire-retardant chemicals, and which have been qualified by UBC Standard 15-2 for use on Class A, B or C roofs.*

Fire-retardant-treated wood shakes and shingles shall comply with ICC-ES EG107 and with the weathering requirements contained in Health and Safety Code Section 13132.7(j). Each bundle shall bear labels from an ICC accredited quality control agency identifying their roof-covering classification and indicating their compliance with ICC-ES EG107 and with the weathering requirements contained in Health and Safety Code Section 13132.7(j).

Health and Safety Code Section 13132.7(j). No wood roof covering materials shall be sold or applied in this state unless both of the following conditions are met:

(1) The materials have been approved and listed by the State Fire Marshal as complying with the requirements of this section.
(2) The materials have passed at least five years of the 10-year natural weathering test. The 10-year natural weathering test required by this subdivision shall be conducted in accordance with standard 15-2 of the 1994 edition of the Uniform Building Code at a testing facility recognized by the State Fire Marshal.

1512.1 Solar photovoltaic panels and modules. Photovoltaic panels and modules installed upon a roof or as an integral part of a roof assembly shall comply with the requirements of this code *(see Section 3111)* and the ~~*International*~~*California Fire Code*.

CHAPTER 21
MASONRY

2113.9.2 Spark arrestors. *[SFM] All chimneys attached to any appliance or fireplace that burns solid fuel shall be equipped with an approved spark* ~~arrester~~*arrestor*, ~~Where a spark arrestor is installed on a masonry chimney~~ the spark arrestor shall meet all of the following requirements:

1. The net free area of the *spark* arrestor shall be not less than four times the net free area of the outlet of the chimney ~~flue it serves~~.
2. The *spark* arrestor screen shall have heat and corrosion resistance equivalent to *12 gage wire*, 19-gage galvanized steel or 24-gage stainless steel.
3. Openings shall not permit the passage of spheres having a diameter larger than 1/2 inch (12.7 mm) nor block the passage of spheres having a diameter less than 3/8 inch (9.5 mm).
~~*1. The net free area of the spark arrestor shall not be less than four times the net free area of the outlet of the chimney.*~~
~~*2. The spark arrestor screen shall have heat and corrosion resistance equivalent to 12 gage wire, 19 gage galvanized wire or 24 gage stainless steel.*~~
~~*3. Openings shall not permit the passage of spheres having a diameter larger than 1/2 inch (12.7 mm) and shall not block the passage of spheres having a diameter of less than 3/8 inch (9.5 mm).*~~
4. The spark arrestor shall be accessible for cleaning and the screen or chimney cap shall be removable to allow for cleaning of the chimney flue.

2113.11.1.2 Gas appliances. Flue lining systems for gas appliances shall be in accordance with the ~~*International Fuel Gas*~~*California Mechanical Code*.

2113.15 Flue area (appliance). Chimney flues shall not be smaller in area than the area of the connector from the appliance. Chimney flues connected to more than one appliance shall be not less than the area of the largest connector plus 50 percent of the areas of additional chimney connectors.

Exceptions:
1. Chimney flues serving oil-fired appliances sized in accordance with NFPA 31.
2. Chimney flues serving gas-fired appliances sized in accordance with the ~~*International Fuel Gas*~~*California Mechanical Code*.

CHAPTER 21A
MASONRY

2113A.9.2 Spark arrestors. *[SFM] All chimneys attached to any appliance or fireplace that burns solid fuel shall be equipped with an approved spark* ~~arrester~~*arrestor*, ~~Where a spark arrestor is installed on a masonry chimney~~ the spark arrestor shall meet all of the following requirements:

1. The net free area of the *spark* arrestor shall be not less than four times the net free area of the outlet of the chimney ~~flue it serves~~.
2. The *spark* arrestor screen shall have heat and corrosion resistance equivalent to *12 gage wire*, 19-gage galvanized steel or 24-gage stainless steel.
3. Openings shall not permit the passage of spheres having a diameter larger than 1/2 inch (12.7 mm) nor block the passage of spheres having a diameter less than 3/8 inch (9.5 mm).
~~*1. The net free area of the spark arrestor shall not be less than four times the net free area of the outlet of the chimney.*~~
~~*2. The spark arrestor screen shall have heat and corrosion resistance equivalent to 12 gage wire, 19 gage galvanized wire or 24 gage stainless steel.*~~
~~*3. Openings shall not permit the passage of spheres having a diameter larger than 1/2 inch (12.7 mm) and shall not block the passage of spheres having a diameter of less than 3/8 inch (9.5 mm).*~~
4. The spark arrestor shall be accessible for cleaning and the screen or chimney cap shall be removable to allow for cleaning of the chimney flue.

CHAPTER 26
PLASTIC

2603.4.1.12 Interior signs. Foam plastic used for interior signs in *covered mall buildings* in accordance with Section 402.6.4 shall be permitted without a thermal barrier. Foam plastic signs that are not affixed to interior building surfaces shall comply with Chapter 8 of the ~~*International*~~*California Fire Code*.

CHAPTER 27
ELECTRICAL

2701.1 Scope. This chapter governs the electrical components, equipment and systems used in buildings and structures covered by this code. Electrical components, equipment and systems shall be designed and constructed in accordance with the provisions of the ~~NFPA 70~~*California Electrical Code*.

2702.1 Installation. Emergency power systems and standby power systems required by this code shall comply with Sections 2702.1.1 through 2702.1.7. ~~*International California Fire Code.*~~

2702.1.2 Electrical. Emergency power systems and standby power systems required by this code or the ~~*International*~~*California* Fire Code shall be installed in accordance with the ~~*International*~~*California* Fire Code, ~~NFPA 70~~*California Electrical Code*, NFPA 110 and NFPA 111.

2702.2.3 Emergency responder radio coverage systems. Standby power shall be provided for emergency responder radio coverage systems required in Section 915 and the ~~*International*~~*California* Fire Code. The standby power supply shall be capable of operating the emergency responder radio coverage system for a duration of not less than 24 hours.

2702.2.8 Hazardous materials. Emergency or standby power shall be provided in occupancies with hazardous materials where required by the ~~*International*~~*California* Fire Code.

2702.2.9 High-rise buildings *and Group I-2 occupancies having occupied floors located more than 75 feet above the lowest level of fire department vehicle access.* Emergency and standby power shall be provided in high-rise buildings *and Group I-2 occupancies having occupied floors located more than 75 feet above the lowest level of fire department vehicle access* as reqruied in section403.4.88. .

2702.2.12 Membrane structures. Standby power shall be provided for auxiliary inflation systems in permant membrane structures are required in Section 3102.8.2. Standby power shall be provided for a duration of not less than 4 hours. Auxiliary inflation systems in temporary air supported and air-inflated membrane structures shall be provided in accordance with Section 3103.10.4 of the ~~*International*~~*California* Fire Code.

2702.2.13 Pyrophoric materials. Emergency power shall be provided for occupancies with silane gas in accordance with the ~~*International*~~*California Fire Code*.

2702.2.17 Group L-Occupancy. *Emergency power shall be provided in Group L occupancies in accordance with this chapter and Section ~~443.4.6.1~~453.4.6.1.*

[Editorial Note: 2013 CBC amendments for Section 2702.2.11 and 2702.2.12 is being removed. These sections are no longer within the model code.]
~~**2702.2.11 Highly toxic and toxic materials.** Emergency power shall be provided for occupancies with highly toxic or toxic materials in accordance with the *International California Fire Code.*~~

~~**2702.2.12 Organic peroxides.** Standby power shall be provided for occupancies with silane gas in accordance with the *International California Fire Code.*~~

2702.4 Maintenance. Emergency and standby power systems shall be maintained and tested in accordance with the ~~*International*~~*California Fire Code*.

CHAPTER 28
MECHANICAL SYSTEMS

2801.1 Scope. Mechanical appliances, equipment and systems shall be constructed, installed and maintained in accordance with the *InternationalCalifornia Mechanical Code* ~~and the International Fuel Gas Code~~. Masonry chimneys, fireplaces and barbecues shall comply with the ~~International~~*California Mechanical Code* and Chapter 21 of this code.

2802 Spark ~~Arrester~~arrestor. [SFM] *All chimneys attached to any appliance or fireplace that burns solid fuel shall be equipped with an approved spark ~~arrester~~arrestor, the spark arrestor shall meet all of the following requirements:*

1. The net free area of the spark ~~arrester~~arrestor shall be not ~~be~~ less than four times the net free area of the outlet of the chimney.
2. The spark ~~arrester~~arrestor screen shall have heat and corrosion resistance equivalent to 12-gage wire, 19-gage steel galvanized wire or 24-gage stainless steel.
3. Openings shall not permit the passage of spheres having a diameter larger than 1/2 inch (12.7 mm) nor~~and shall not~~ block the passage of spheres having a diameter ~~of~~ less than 3/8 inch (9.5 mm).
4. The spark arrestor shall be accessible for cleaning and the screen or chimney cap shall be removable to allow for cleaning of the chimney flue.

CHAPTER 30
ELEVATORS AND CONVEYING SYSTEMS

3001.2 Referenced standards. Except as otherwise provided for in this code, the design, construction, installation, *alteration*, repair and maintenance of elevators and conveying systems and their components shall conform to ~~ASME A17.1/CSA B44, ASME A17.7/CSA B44.7~~*California Code of Regulations, Title 8, Division 1, Chapter 4, Subchapter 6, Elevator Safety Orders*, ASME A90.1, ASME B20.1, ALI ALCTV, and ASCE 24 for construction in flood hazard areas established in Section 1612.3.

3001.4 Change in use. A change in use of an elevator from freight to passenger, passenger to freight, or from one freight class to another freight class shall comply with ~~Section 8.7 of ASME A17.1/CSA B44~~*California Code of Regulations, Title 8, Division 1, Chapter 4, Subchapter 6, Elevator Safety Orders.*

3001.5 Elevators utilized to transport hazardous materials. *Elevators utilized to transport hazardous materials shall also comply with the California Fire Code Section 2703.10.4.*

The following California sections replace the corresponding model code section for applications specified in section 1.11 for the Office of the State Fire Marshal.

***3002.4a General* Stretcher Requirements.** *All buildings and structures with one or more passenger service elevators shall be provided with not less than one medical emergency service elevator to all landings meeting the provisions of Section 3002.4a.*

Exceptions:
1. Elevators in structures used only by maintenance and operating personnel.
2. Elevators in jails and penal institutions.
3. Elevators in buildings or structures where each landing is at ground level or is accessible at grade level or by a ramp.
4. Elevator(s) in two-story buildings or structures equipped with stairs of a configuration that will accommodate the carrying of the gurney or stretcher as permitted by the local jurisdictional authority.
5. Elevators in buildings or structures less than four stories in height for which the local jurisdictional authority has granted an exception in the form of a written document.

3002.4.1a Gurney size. *The medical emergency service elevator shall accommodate the loading and transport of an ambulance gurney or stretcher [maximum size 24 inches by 84 inches (610 mm by 2134 mm) with not less than 5-inch (127 mm) radius corners] in the horizontal position.*

3002.4.2a Hoistway doors. *The hoistway landing openings shall be provided with power-operated doors.*

3002.4.3a Elevator entrance openings and car size. *The elevator car shall be of such a size and arrangement to accommodate a 24-inch by 84-inch (610 mm by 2134 mm) ambulance gurney or stretcher with not less than 5-inch (127 mm) radius corners, in the horizontal, open position, shall be provided with a minimum clear distance between*

walls or between walls and door excluding return panels not less than 80 inches by 54 inches (2032 mm by 1372 mm), and a minimum distance from wall to return panel not less than 51 inches (1295 mm) with a 42-inch (1067 mm) side slide door.

Exception: *The elevator car dimensions and/or the clear entrance opening dimensions may be altered where it can be demonstrated to the local jurisdictional authority's satisfaction that the proposed configuration will handle the designated gurney or stretcher with equivalent ease. Documentation from the local authority shall be provided to the Occupational Safety and Health Standards Board.*

3002.4.4a Elevator recall. *The elevator(s) designated the medical emergency elevator shall be equipped with a key switch to recall the elevator nonstop to the main floor. For the purpose of this section, elevators in compliance with Section 3003.2 shall be acceptable.*

3002.4.5a Designation. *Medical emergency elevators shall be identified by the international symbol (Star of Life) for emergency medical services.*

3002.4.6a Symbol size. *The symbol shall not be less than 3 inches (76 mm) in size.*

3002.4.7a Symbol location. *A symbol shall be permanently attached to each side of the hoistway door frame on the portion of the frame at right angles to the hallway or landing area. Each symbol shall be not less than 78 inches (1981 mm) and not more than 84 inches (2134 mm) above the floor level at the threshold.*

3002.5 Emergency doors. ~~Where an elevator is installed in a single blind hoistway or on the outside of a building, there shall be installed in the blind portion of the hoistway or blank face of the building, an emergency door in accordance with ASME A17.1/CSA B44.~~*Emergency doors in blind hoistways as described in ASME A17.1~~-2004~~, section 2.11.1.2, and access panels as described in ASME A17.1~~-2004~~, section 2.11.1.4, are prohibited in accordance with California Code of Regulations, Title 8, Division 1, Chapter 4, Subchapter 6, Elevator Safety Orders.*

~~3002.9~~3002.10 Photoelectric Tube Bypass Switch.

~~3002.9.1~~3002.10.1 Elevators equipped with photoelectric tube devices which control the closing of automatic, power-operated car or hoistway doors, or both, shall have a switch in the car which, when actuated, will render the photoelectric tube device ineffective.

~~3002.9.2~~3002.10.2 The switch shall be constant-pressure type, requiring not less than 10 pounds (44.5N) or more than 15 pounds (66.7 N) pressure to actuate.

~~3002.9.3~~3002.10.3 The switch shall be located not less than 6 feet (1829 mm) or more than 6 feet 6 inches (1981 mm) above the car floor and shall be located in or adjacent to the operating panel.

~~3002.9.4~~3002.10.4 The switch shall be clearly labeled TO BE USED IN CASE OF FIRE ONLY.

~~3002.9.5~~3002.10.5 Switches shall be kept in working order or be removed when existing installations are arranged to comply with Section ~~3002.9.5~~3002.10.5, Exception 1 or 2.

Exceptions
1. Elevators installed and maintained in compliance with Section 3003.
2. Where alternate means acceptable to the fire authority having jurisdiction are provided that will ensure the doors can close under adverse smoke conditions.

3003.2 Fire-fighters' emergency operation. Elevators shall be provided with Phase I emergency recall operation and Phase II emergency in-car operation in accordance with ~~ASME A17.1/CSA B44~~*California Code of Regulations, Title 8, Division 1, Chapter 4, Subchapter 6, Elevator Safety Orders.*

3003.2.1 Floor numbers. *Elevator hoistways shall have a floor number not less than 4 inches (102 mm) in height, placed on the walls and/or doors of the hoistway at intervals such that a person in a stalled elevator, upon opening the car door, can determine the floor position.*

3003.2.1.1 Fire signs. *All automatic elevators shall have not less than one sign at each landing printed on a contrasting background in letters not less than 1/2 inch (12.7 mm) high to read: IN CASE OF FIRE USE STAIRWAY FOR EXIT. DO NOT USE ELEVATOR.*

3003.2.1.2 Call and Car Operation Buttons. *Automatic passenger elevators shall have call and car operation buttons within 60 inches (1524 mm) of the floor. Emergency telephones shall also be within 60 inches (1524 mm) of the floor.*

3003.3 Standardized fire service elevator keys. All elevators shall be equipped to operate with a standardized fire service elevator key in accordance with the ~~*International*~~*California Fire Code.*

[Editorial Note: 2013 CBC amendments for 2013 Section 3004.1 and 3004.3.1 is being removed. These sections are no longer within the code.]
~~**3004.1 Vents required.** Hoistways of elevators and dumbwaiters penetrating more than three stories shall be provided with a means for venting smoke and hot gases to the outer air in case of fire.~~

~~**Exceptions:**~~
~~1. In occupancies of other than Groups R-1, R-2, I-1*R-2.1*, I-2 and similar occupancies with overnight sleeping units, venting of hoistways is not required where the building is equipped throughout with an approved automatic sprinkler system installed in accordance with Section 903.3.1.1 or 903.3.1.2.~~
~~2. Sidewalk elevator hoistways are not required to be vented.~~
~~3. Elevators contained within and serving open parking garages only.~~
~~4. Elevators within individual residential dwelling units.~~

~~**3004.3.1 Reduced vent area.** Where mechanical ventilation conforming to the *International California Mechanical Code* is provided, a reduction in the required vent area is allowed provided that all of the following conditions are met:~~

~~1. The occupancy is not in Group R-1, R-2, I-1*R-2.1* or I-2 or of a similar occupancy with overnight sleeping quarters.~~
~~2. The vents required by Section 3004.2 do not have outside exposure.~~
~~3. The hoistway does not extend to the top of the building.~~
~~4. The hoistway and machine room exhaust fan is automatically reactivated by thermostatic means.~~
~~5. Equivalent venting of the hoistway is accomplished.~~

***~~3006.4.1~~3005.4.1* Automatic sprinkler system.** *Automatic sprinklers shall not be required to be installed in the elevator hoistway, elevator machine room, elevator machinery space, elevator control space, ~~or~~and elevator control room where all the following are met:*

1. Approved smoke detectors shall be installed in the elevator hoistway, elevator machine room, elevator machinery spaces, elevator control spaces, ~~or~~and elevator control rooms and connected to the building fire alarm system in accordance with Section 907.
2. Activation of any smoke detector located in the elevator hoistway, elevator machine room, elevator machinery space, elevator control space, ~~or~~and elevator control room shall cause the actuation of the building fire alarm notification appliances in accordance with 907.
3. Activation of any smoke detector located in the elevator hoistway, elevator machine room, elevator machinery space, elevator control space, ~~or~~and elevator control room shall cause all elevators having any equipment located in that elevator hoistway, elevator machine room, elevator machinery space, elevator control space, ~~or~~and elevator control room to recall nonstop to the appropriate designated floor in accordance with CCR Title 8, Division 1, Chapter 4, Subchapter 6, Elevator Safety Orders.
4. The elevator machine room, elevator machinery space, elevator control space, ~~or~~and elevator control room shall be enclosed with fire barriers constructed in accordance with Section 707 or horizontal assemblies constructed in accordance with Section 712, or both. The fire-resistance rating shall not be less than the required rating of the hoistway enclosure served by the machinery. Openings in the fire barriers shall be protected with assemblies having a fire protection rating not less than that required for the hoistway enclosure doors. The exceptions to Section ~~3006.4~~3005.4 shall not apply.
5. The building fire alarm system shall be monitored by an approved supervising station in accordance with 907.
6. An approved sign shall be permanently displayed in the elevator machine room, elevator machinery space, elevator control space, ~~or~~and elevator control room in a conspicuous location with a minimum of 1½ inch letters on a contrasting background, stating:

NO COMBUSTIBLE STORAGE
PERMITTED IN THIS ROOM
By Order of the Fire Marshal [or name of fire authority]

***3005.5* Shunt trip.** Where elevator hoistways, elevator machine rooms, control rooms and control spaces containing elevator control equipment are protected with automatic sprinklers, a means installed in accordance with Section *21.4* of NFPA 72 shall be provided to disconnect automatically the main line power supply to the affected elevator prior to the application of water. This means shall not be self-resetting. The activation of automatic sprinklers outside the hoistway, machine room, machinery space, control room or control space shall not disconnect the main line power supply

3006.1 General. Elevator hoistway openings and enclosed elevator lobbies shall be provided in accordance with the following:

1. Where hoistway opening protection is required by Section 3006.2, such protection shall be in accordance with Section 3006.3.
2. Where enclosed elevator lobbies are required for underground buildings, such lobbies shall comply with Section 405.4.3.
3. Where an area of refuge is required and an enclosed elevator lobby is provided to serve as an area of refuge, the enclosed elevator lobby shall comply with Section 1009.6.
4. Where fire service access elevators are provided, enclosed elevator lobbies shall comply with Section 3007.6. 5. Where occupant evacuation elevators are provided, enclosed elevator lobbies shall comply with Section 3008.6.

3006.2 Hoistway opening protection required. Elevator hoistway door openings shall be protected in accordance with Section 3006.3 where an elevator hoistway connects more than ~~three stories~~ *two stories in Group A, E, H, I, L, R-1, R-2 and R-2.1 occupancies, high-rise buildings, and other applications listed in Section 1.11 regulated by the Office of the State Fire Marshal, and more than three stories for all other occupancies*, is required to be enclosed within a shaft enclosure in accordance with Section 712.1.1 and any of the following conditions apply:

1. The building is not protected throughout with an automatic sprinkler system in accordance with Section 903.3.1.1 or 903.3.1.2.
~~2. The building contains a Group I-1 Condition 2 occupancy.~~
~~3. The building contains a Group I-2 occupancy.~~
~~4. The building contains a Group I-3 occupancy.~~
~~5. The building is a high rise and the elevator hoistway is more than 75 feet (22 860 mm) in height. The height of the hoistway shall be measured from the lowest floor to the highest floor of the floors served by the hoistway.~~
2. *Group A occupancies;*
3. *Group E occupancies;*
4. *Group H occupancies;*
5. *Group I occupancies;*
6. *Group L occupancies;*
7. *Group R-1, R-2 and R-2.1 occupancies; and*
8. *High-rise buildings.*

See Section 403.6 for additional requirements for high-rise buildings.

Exceptions:
1. Protection of elevator hoistway door openings is not required where the elevator serves only open parking garages in accordance with Section 406.5.
2. Protection of elevator hoistway door openings is not required at the level(s) of exit discharge, provided the level(s) of exit discharge is equipped with an automatic sprinkler system in accordance with Section 903.3.1.1.
3. Enclosed elevator lobbies and protection of elevator hoistway door openings are not required on levels where the elevator hoistway opens to the exterior.

3006.3 Hoistway opening protection. Where Section 3006.2 requires protection of the elevator hoistway door opening, the protection shall be provided by one of the following:

1. An enclosed elevator lobby shall be provided at each floor to separate the elevator hoistway shaft enclosure doors from each floor by fire partitions in accordance with Section 708. In addition, doors protecting openings in the elevator

lobby enclosure walls shall comply with Section 716.5.3 as required for corridor walls. Penetrations of the enclosed elevator lobby by ducts and air transfer openings shall be protected as required for corridors in accordance with Section 717.5.4.1.

2. An enclosed elevator lobby shall be provided at each floor to separate the elevator hoistway shaft enclosure doors from each floor by smoke partitions in accordance with Section 710 where the building is equipped throughout with an automatic sprinkler system installed in accordance with Section 903.3.1.1 or 903.3.1.2. In addition, doors protecting openings in the smoke partitions shall comply with Sections 710.5.2.2, 710.5.2.3 and 716.5.9. Penetrations of the enclosed elevator lobby by ducts and air transfer openings shall be protected as required for corridors in accordance with Section 717.5.4.1.

3. Additional doors shall be provided at each elevator hoistway door opening in accordance with Section 3002.6. Such door shall comply with the smoke and draft control door assembly requirements in Section 716.5.3.1 when tested in accordance with UL 1784 without an artificial bottom seal.

4. ~~The~~ *[SFM] When approved, in other than Group I-2 occupancies* elevator hoistway shall be pressurized in accordance with Section 909.21.

5. [SFM] Enclosed elevator lobbies are not required where the hoistway door has a fire-protection rating as required by Section 708.7 and the hoistway door opening is also protected by a listed and labeled smoke containment system complying with ICC ES AC 77.

3007.1 General. Where required by Section 403.6.1, every floor of the building shall be served by fire service access elevators complyuing with Sections 3007.1 through 3007.9. Except as modified in this section, fire service access elevators shall be installed in accordance with this chapter and ~~ASME A17.1/CSA B44~~*California Code of Regulations, Title 8, Division 1, Chapter 4, Subchapter 6, Elevator Safety Orders.*

[Editorial Note: 2013 CBC amendments for 2013 Section 3007.2 is being removed. This section is no longer within the code.]
~~**3007.2 Phase I Emergency recall operation.** Actuation of any building fire alarm initiating device shall initiate Phase I emergency recall operation on all fire service access elevators in accordance with the requirements in ASME A17.1/CSA B44*California Code of Regulations, Title 8, Division 1, Chapter 4, Subchapter 6, Elevator Safety Orders.* All other elevators shall remain in normal service unless Phase I emergency recall operation is manually initiated by a separate, required three-position, key-operated "Fire Recall" switch or automatically initiated by the associated elevator lobby, hoistway or elevator machine room smoke detectors. In addition, if the building also contains occupant evacuation elevators in accordance with Section 3008, an independent, three-position, key-operated "Fire Recall" switch conforming to the applicable requirements in ASME A17.1/CSA B44*California Code of Regulations, Title 8, Division 1, Chapter 4, Subchapter 6, Elevator Safety Orders* shall be provided at the designated level for each fire service access elevator.~~

3007.6.1 Access to ~~interior exit stairway or ramp~~*smokeproof enclosure*. The fire service access elevator lobby shall have direct access ~~stairway~~ *from the enclosed elevator lobby to* ~~an enclosure for an interior exit stairway or ramp~~ *smokeproof enclosure complying with Section 909.20.*

Exception: Access to ~~an interior exit stairway or ramp~~*a smokeproof enclosure* shall be permitted to be through a protected path of travel that has a level of fire protection not less than the elevator lobby enclosure. The protected path shall be separated from the enclosed elevator lobby through an opening protected by a smoke and draft control assembly in accordance Section 716.5.3.
~~***Exception:** Access to a smokeproof enclosure shall be permitted to be through a protected path of travel that has a level of fire protection not less than the elevator lobby enclosure. The protected path shall be separated from the enclosed elevator lobby through an opening protected by a smoke and draft control assembly in accordance Section 716.5.3.*~~

3007.6.4 Lobby size. Regardless of the number of fire service access elevators served by the same elevator lobby, the ~~*Regardless of the number of fire service access elevators served by the same elevator lobby, the*~~ enclosed fire service access elevator lobby shall be a less than 150 square feet (14 m2) in an area with dimension of not less than 8 feet (2440 mm).

3008.1.2 Fire safety and evacuation plan. The building shall have an *approved* fire safety and evacuation plan in accordance with the applicable requirements of Section 404 of the ~~International~~*California Fire Code*. The fire safety and evacuation plan shall incorporate specific procedures for the occupants using evacuation elevators.

[Editorial Note: 2013 CBC amendments for 2013 Section 3008.2 and 3008.2.1 is being removed. This section is no longer within the code.]
~~**3008.2 Phase I Emergency recall operation.** An independent, three-position, key-operated "Fire Recall" switch complying with ASME A17.1/CSA B44*California Code of Regulations, Title 8, Division 1, Chapter 4, Subchapter 6, Elevator Safety Orders* shall be provided at the designated level for each occupant evacuation elevator.~~

~~**3008.2.1 Operation.** The occupant evacuation elevators shall be used for occupant self-evacuation only in the normal elevator operating mode prior to Phase I Emergency Recall Operation in accordance with the requirements in ASME A17.1/CSA B44*California Code of Regulations, Title 8, Division 1, Chapter 4, Subchapter 6, Elevator Safety Orders* and the building's fire safety and evacuation plan.~~

3008.2.1 Prohibited locations. Automatic sprinklers shall not be installed in elevator machine rooms, machinery spaces, control rooms, control spaces and elevator hoistways of occupant evacuation elevators *in accordance with this Section and 3006.4.1.*

[Editorial Note: 2013 CBC amendments for 2013 Section 3008.7.6 is being removed. This section is no longer within the code.]
~~**3008.7.6 Lobby status indicator.** Each occupant evacuation elevator lobby shall be equipped with a status indicator arranged to display all of the following information:~~

~~1. An illuminated green light and the message, "Elevators available for occupant evacuation" when the elevators are operating in normal service and the fire alarm system is indicating an alarm in the building.~~
~~2. An illuminated red light and the message, "Elevators out of service, use exit stairs" when the elevators are in Phase I emergency recall operation *or Phase II firefighters' emergency operation* in accordance with the requirements in ASME A17.1/CSA B44*California Code of Regulations, Title 8, Division 1, Chapter 4, Subchapter 6, Elevator Safety Orders.*~~
~~3. No illuminated light or message when the elevators are operating in normal service.~~

~~**3008.8.1 Elevator recall.** The fire command center or an alternative location *approved* by the fire department shall be provided with the means to manually initiate a Phase I Emergency Recall of the occupant evacuation elevators in accordance with ASME A17.1/CSA B44*California Code of Regulations, Title 8, Division 1, Chapter 4, Subchapter 6, Elevator Safety Orders.*~~

CHAPTER 31
SPECIAL CONSTRUCTION

3102.1 General. The provisions of Sections 3102.1 through 3102.8 shall apply to air-supported, air-inflated, membrane-covered cable, membrane-covered frame and tensile membrane structures, collectively known as membrane structures, erected for a period of 180 days or longer. Those erected for a shorter period of time shall comply with the ~~*International*~~*California Fire Code*. Membrane structures covering water storage facilities, water clarifiers, water treatment plants, sewage treatment plants, greenhouses and similar facilities not used for human occupancy, are required to meet only the requirements of Sections 3102.3.1 and 3102.7. Membrane structures erected on a building, balcony, deck or other structure for any period of time shall comply with this section.

3102.3.1 Membrane and interior liner material. Membranes and interior liners shall be either noncombustible as set forth in Section 703.5 or ~~meet the fire propagation performance criteria of Test Method 1 or Test Method 2, as appropriate, of NFPA 701 and the manufacturer's test protocol.~~ *shall be flame resistant in accordance with* ~~*appropriate standards*~~*the provisions set forth in CCR, Title 19, Division 1, Chapter 8. Tops and sidewalls shall be made either from fabric which has been flame resistant treated with an approved exterior chemical process by an approved application concern, or from inherently flame resistant fabric approved and listed by the State Fire Marshal (see CCR, Title 19, Division 1, Chapter 8).*

Exception: Plastic less than 20 mil (0.5 mm)in thickness used in greenhouses, where occupancy by the general public is not authorized, and for aquaculture pond covers is not required to meet the fire propagation performance criteria of Test Method 1 or Test Method 2, as appropriate, of NFPA 701 .

3103.1 General. The provisions of Sections 3103.1 through 3103.4 shall apply to structures erected for a period of less than 180 days. Tents and other membrane structures erected for a period of less than 180 days shall comply with the ~~*International*~~*California Fire Code*. Those erected for a longer period of time shall comply with applicable sections of this code.

3105.4 Awnings and canopy materials. ~~Awnings and canopies shall be provided with an approved covering that meets the fire propagation performance criteria of Test Method 1 or Test Method 2, as appropriate, of NFPA 701 or has a flame spread index not greater than 25 when tested in accordance with ASTM E 84 or UL 723.~~ *All fabrics and all interior decorative fabrics or materials shall be flame resistant in accordance with the provisions ~~appropriate standards~~ set forth in CCR, Title 19, Division 1, Chapter 8. Tops and sidewalls shall be made either from fabric which has been flame resistant treated with an approved exterior chemical process by an approved application concern, or from inherently flame resistant fabric approved and listed by the State Fire Marshal (see CCR, Title 19, Division 1, Chapter 8).*

Exception: The fire propagation performance and flame spread index requirements shall not apply to awnings installed on detached one- and two-family dwellings.

3111.1 General. Photovoltaic panels/modules shall comply with the requirements of this code, ~~and~~ the ~~*International*~~*California Fire Code and the California Electrical Code*.

~~***3111.1 Solar photovoltaic power systems.*** *Solar photovoltaic power systems shall be installed in accordance with Sections 3111.1 through 3111.3 and the California Electrical Code.*~~

3111.1.1 Rooftop-mounted photovoltaic panels and modules. Photovoltaic panels and modules installed on a roof or as an integral part of a roof assembly shall *also* comply with the requirements of Chapter 15 and the ~~*International*~~*California Fire Code*.

3111.2 Access and pathways. *Roof access, pathways, and spacing requirements shall be provided in accordance with Sections 3111.2.1 through 3111.2.3.3.*

Exceptions:
1. Detached, nonhabitable Group U structures including, but not limited to, parking shade structures, carports, solar trellises and similar structures.
2. Roof access, pathways, and spacing requirements need not be provided where the fire chief has determined rooftop operations will not be employed.

3111.2.1 Roof access points. *Roof access points shall be located in areas that do not require the placement of ground ladders over openings such as windows or doors, and located at strong points of building construction in locations where the access point does not conflict with overhead obstructions such as tree limbs, wires, or signs.*

3111.2.2 Solar photovoltaic systems for Group R-3 buildings. *Solar photovoltaic systems for Group R-3 buildings* shall be provided in accordance with Sections 3111.2.2.1 through 3111.2.2.4.

Exception: These requirements shall not apply to roofs with slopes of two units vertical in 12 units horizontal (2:12) or less.

3111.2.2.1 Size of solar photovoltaic array. *Each photovoltaic array shall be limited to 150 feet (45 720 mm) by 150 feet (45 720 mm). Multiple arrays shall be separated by a 3-foot-wide (914 mm) clear access pathway.*

3111.2.2.2 Hip roof layouts. Panels *and* modules installed on *Group R-3* buildings with hip roof layouts shall be located in a manner that provides a 3-foot-wide (914 mm) clear access pathway from the eave to the ridge on each roof slope where panels *and* modules are located. The access pathway shall be located at a structurally strong location on the building capable of supporting the live load of fire fighters accessing the roof.

Exception: *These requirements shall not apply to roofs with slopes of two units vertical in 12 units horizontal (2:12) or less.*

3111.2.2.3 Single ridge roofs. Panels *and* modules installed on *Group R-3* buildings with a single ridge shall be

located in a manner that provides two, 3-foot-wide (914 mm) access pathways from the eave to the ridge on each roof slope where panels *and* modules are located.

Exception: This requirement shall not apply to roofs with slopes of two units vertical in 12 units horizontal (2:12) or less.

3111.2.2.4 Roofs with hips and valleys. Panels *and* modules installed on *Group R-3 buildings* with roof hips and valleys shall be located no closer than 18 inches (457 mm) to a hip or a valley where Panels *and* modules are to be placed on both sides of a hip or valley. Where panels are to be located on only one side of a hip or valley that is of equal length, the panels shall be permitted to be placed directly adjacent to the hip or valley.

Exception: These requirements shall not apply to roofs with slopes of two units vertical in 12 units horizontal (2:12) or less.

***3111.2.2.5 Allowance for* smoke ventilation operation.** Panels *and* modules installed on *Group R-3 buildings* shall be located no *less* than 3 feet (914 mm) from the ridge in order to allow for fire department smoke ventilation operations.

Exception: *Panels and modules shall be permitted to be located up to the roof ridge where an alternative ventilation method approved by the fire chief has been provided or where the fire chief has determined vertical ventilation techniques will not be employed.*

***3111.2.3* Other than Group R-3 buildings.** Access to systems for *buildings* other than *those containing Group R-3 occupancies* shall be provided in accordance with Sections *3111.2.3.1* through *3111.2.3.3*.

Exception: Where it is determined by the *fire code official* that the roof configuration is similar to that of a *Group R-3 occupancy*, the residential access and ventilation requirements in Sections *3111.2.2.1* through *3111.2.2.5* shall be permitted to be used.

***3111.2.3.1* Access.** There shall be a minimum 6-foot-wide (1829 mm) clear perimeter around the edges of the roof.

Exception: Where either axis of the building is 250 feet (76 200 mm) or less, *the clear perimeter around the edges of the roof* shall be a minimum 4-foot-wide (1290 mm).

3111.2.3.2 Pathways. *The solar installation shall be designed to provide designated pathways. The pathways shall meet the following requirements:*
1. The pathway shall be over areas capable of supporting the live load of fire fighters accessing the roof.
2. The centerline axis pathways shall be provided in both axes of the roof. Centerline axis pathways shall run where the roof structure is capable of supporting the live load of fire fighters accessing the roof.
3. Shall be a straight line not less than 4 feet (1290 mm) clear to skylights or ventilation hatches.
4. Shall be a straight line not less than 4 feet (1290 mm) clear to roof standpipes.
5. Shall provide not less than 4 feet (1290 mm) clear around roof access hatch with at least one not less than 4 feet (1290 mm) clear pathway to parapet or roof edge.

3111.2.3.3 Smoke ventilation. *The solar installation shall be designed to meet the following requirements:*
1. Arrays shall be no greater than 150 feet (45 720 mm) by 150 feet (45 720 mm) in distance in either axis in order to create opportunities for fire department smoke ventilation operations.
2. Smoke ventilation options between array sections shall be one of the following:
2.1. A pathway 8 feet (2438 mm) or greater in width.
2.2. A 4-foot (1290 mm) or greater in width pathway and bordering roof skylights or smoke and heat vents.
2.3. A 4-foot (1290 mm) or greater in width pathway and bordering 4-foot by 8-foot (1290 mm by 2438 mm) "venting cutouts" every 20 feet (6096 mm) on alternating sides of the pathway.

***3111.3* Ground-mounted photovoltaic arrays.** Ground-mounted photovoltaic arrays shall comply with this section *and the California Electrical Code*. Setback requirements shall not apply to ground-mounted, free-standing photovoltaic arrays. A clear, brush-free area of 10 feet (3048 mm) shall be required for ground mounted photovoltaic arrays.

CHAPTER 33

SAFEGUARDS DURING CONSTRUCTION

3309.2 Fire hazards. The provisions of this code and the ~~*International*~~*California Fire Code* shall be strictly observed to safeguard against all fire hazards attendant upon construction operations.

CHAPTER 34
RESERVED

[Editor's Note: 2013 CBC Chapter 34 was relocated to California Fire Code Chapter 11 and California Existing Building Code]

~~**3401.3 Compliance.** Alterations, repairs, additions and changes of occupancy to existing structures shall comply with the provisions for alterations, repairs, additions and changes of occupancy in the *International California Fire Code, International Fuel Gas Code, International California Mechanical Code, International California Plumbing Code, International Property Maintenance Code, International Private Sewage Disposal Code, International California Residential Code* and NFPA 70*California Electrical Code.*~~

~~***3401.6*****3401.7** **Existing Group R-3 Occupancies. [SFM]** *See the California Residential Code for existing Group R-3 occupancies or Chapter 46 of the California Fire Code for all other existing Group R occupancies.*~~

~~**3411.8.2 Elevators.** Altered elements of existing elevators shall comply with ASME A17.1*California Code of Regulations, Title 8, Division 1, Chapter 4, Subchapter 6, Elevator Safety Orders* and ICC A117.1. Such elements shall also be altered in elevators programmed to respond to the same hall call control as the altered elevator.~~

~~**SECTION 3413**~~
~~**EXISTING GROUP R-1 AND GROUP R-2 OCCUPANCIES [SFM]**~~

~~***3413.1 Scope.*** *The provisions of this section are intended to maintain or increase the current degree of public safety, health and general welfare in existing buildings classified as Group R Occupancies.*~~

~~***3413.1.1 Application.*** *In accordance with Health and Safety Code Section 13143.2, the provisions of Sections 3413.2 through 3413.12 shall only apply to multiple-story structures existing on January 1, 1975, let for human habitation, including, and limited to, apartment houses, hotels, and motels wherein rooms used for sleeping are let above the ground floor.*~~

~~***3413.2 Number of exits.*** *Every apartment and every other sleeping room shall have access to not less than two exits when the occupant load is 10 or more (exits need not be directly from the apartment or sleeping room). A fire escape as specified herein may be used as one required exit.*~~

~~*Subject to approval of the authority having jurisdiction, a ladder device as specified herein may be used in lieu of a fire escape when the construction feature or the location of the building on the property cause the installation of a fire escape to be impractical.*~~

~~***3413.3 Stair construction.*** *All stairs shall have a minimum run of 9 inches (229 mm) and a maximum rise of 8 inches (203 mm) and a minimum width exclusive of handrails of 30 inches (762 mm). Every stairway shall have at least one handrail. A landing having a minimum horizontal dimension of 30 inches (762 mm) shall be provided at each point of access to the stairway.*~~

~~***3413.4 Interior stairways.*** *Every interior stairway shall be enclosed with walls of not less than one-hour fire-resistive construction. Where existing partitions form part of a stairwell enclosure, wood lath and plaster in good condition will be acceptable in lieu of one-hour fire-resistive construction. Doors to such enclosures shall be protected by a self-closing door equivalent to a solid wood door with a thickness of not less than 13/4 inches (44.5 mm).*~~

~~*Enclosures shall include all landings between flights and any corridors, passageways or public rooms necessary for continuous exit to the exterior of the buildings. The stairway need not be enclosed in a continuous shaft if cut off at each story by the fire-resistive construction required by this subsection for stairwell enclosures. Enclosures shall not be required if an automatic sprinkler system is provided for all portions of the building except bedrooms, apartments and rooms accessory thereto. Interior stairs and vertical openings need not be enclosed in two-story buildings.*~~

~~**3413.5 Exterior stairways.** Exterior stairways shall be noncombustible or of wood of not less than 2-inch (51 mm) nominal thickness with solid treads and risers.~~

~~**3413.6 Fire escapes, exit ladder devices.** Fire escapes may be used as one means of egress if the pitch does not exceed 60 degrees, the width is not less than 18 inches (457 mm), the treads are not less than 4 inches (102 mm) wide, and they extend to the ground or are provided with counterbalanced stairs reaching to the ground. Access shall be by an opening having a minimum dimension of 29 inches (737 mm) when open. The sill shall not be more than 30 inches (762 mm) above the floor and landing.~~

~~A ladder device, when used in lieu of a fire escape, shall conform to Section 3413.6.1 and the following:~~

~~Serves an occupant load of nine people or less or a single dwelling unit or hotel room.~~
~~The building does not exceed three stories in height.~~
~~The access is adjacent to an opening as specified for emergency egress or rescue or from a balcony.~~
~~The device does not pass in front of any building opening below the unit being served.~~
~~The availability of activating the ladder device is accessible only to the opening or balcony served.~~
~~The device as installed will not cause a person using it to be within 12 feet (3658 mm) of exposed energized high-voltage conductors.~~

~~**3413.6.1 Exit ladder devices.**~~

~~**3413.6.1.1 Scope.** This standard for exit ladder devices is applicable where such devices are permitted by the building official for installation on existing apartment houses and hotels in conformance with the California Building Code.~~

~~**3413.6.1.2 Instructions.** Installation shall be in accordance with the manufacturer's instructions. Instructions shall be illustrated and shall include directions and information adequate for attaining proper and safe installation of the product. Where exit ladder devices are intended for mounting on different support surfaces, specific installation instructions shall be provided for each surface.~~

~~**3413.6.1.3 General design.** All load bearing surfaces and supporting hardware shall be of noncombustible materials. Exit ladder devices shall have a minimum width of 12 inches (305 mm) when in the position intended for use. The design load shall not be less than 400 pounds (1780N) for 16 foot (4877 mm) length and 600 pounds (2699N) for 25-foot (7620 mm) length.~~

~~**3413.6.1.4 Performance.**~~

~~**3413.6.1.4.1** Exit ladder devices shall be capable of withstanding an applied load of four times the design load when installed in the manner intended for use. Test loads shall be applied for a period of one hour.~~

~~**3413.6.1.4.2** Exit ladder devices of the retractable type shall, in addition to the static load requirements of Section 413.6.1.4.1, be capable of withstanding the following tests:~~

~~1. Rung strength~~
~~2. Rung-to-side-rail shear strength~~
~~3. Release mechanism~~
~~4. Low temperature~~

~~**3413.6.1.5 Rung strength test.** Rungs of retractable exit ladder devices shall be capable of withstanding a load of 1,000 pounds (4448N) when applied to a 31/2 inch wide (89 mm) block resting at the center of the rung. The test load shall be applied for a period of one hour. The ladder shall remain operational following this test.~~

~~**3413.6.1.6 Rung-to-side-rail shear test.** Rungs of retractable exit ladder devices shall be capable of withstanding 1,000 (4448N) when applied to a 31/2 inch wide (89 mm) block resting on the center rung as near the side rail as possible. The test load shall be applied for a period of one hour. Upon removal of the test load the fasteners attaching the rung to the side rail shall show no evidence of failure. The ladder shall remain operational following the test.~~

~~**3413.6.1.7 Release mechanism test.** The release mechanism of retractable exit ladder devices shall operate with an average applied force of not more than 5 pounds (22.2N) for hand-operated releasing mechanisms and an average~~

~~applied force of not more than 25 pounds (111N) for foot pedal types of releasing mechanisms. For these tests, a force gauge shall be applied to the release mechanism, and the average of three consecutive readings shall be computed.~~

~~**3413.6.1.8 Low temperature operation test.** Representative samples of the exit ladder devices shall be subjected to a temperature of -40°C in an environmental chamber for a period of 24 hours. The release mechanism shall be operated immediately upon removal from the chamber. The ladder device shall function as intended without any restriction of operation.~~

~~**3413.7 Doors and openings.** Exit doors and openings shall meet the requirements of Sections 1008.1.2, 1008.8.1.8, 1008.1.9 and 708.6. Doors shall not reduce the required width of stairway more than 6 inches (152 mm) when open. Transoms and openings other than doors from corridors to rooms shall be fixed closed and shall be covered with a minimum of 3/4 inch (19 mm) plywood or 1/2 inch (13 mm) gypsum wallboard or equivalent material.~~

~~**Exceptions:**~~
~~1. Existing solid bonded wood core doors 13/8 inches thick (34.9 mm), or their equivalent may be continued in use.~~
~~2. Where the existing frame will not accommodate a door complying with Section 708.6, a 13/8 inch thick (35 mm) solid bonded wood core door may be used.~~

~~**3413.8 Exit signs.** Every exit doorway or change of direction of a corridor shall be marked with a well lighted exit sign having letters at least 5 inches (127 mm) high.~~

~~**3413.9 Enclosure of vertical openings.** Elevators, shafts, ducts and other vertical openings shall be enclosed as required for stairways in Section 3413.5 or by wired glass set in metal frames. Doors shall be noncombustible or as regulated in Section 3413.5.~~

~~**3413.10 Separation of occupancies.** Occupancy separations shall be provided as specified in Section 508. Lobbies and public dining rooms, not including cocktail lounges, shall not require a separation if the kitchen is so separated from the dining room. Every room containing a boiler or central heating plant shall be separated from the rest of the building by not less than a one-hour fire resistive occupancy separation.~~

~~**Exception:** A separation shall not be required for such rooms with equipment serving only one dwelling unit.~~

~~**3413.11 Equivalent protection.** In lieu of the separation of occupancies required by Section 3413.10, equivalent protection may be permitted when approved by the enforcement agency.~~

~~**Exception:** The provisions of Sections 3413.3 through 3413.11 above shall not apply to any existing apartment house, hotel or motel having floors (as measured from the top of the floor surface) used for human occupancy located more than 75 feet (22 860 mm) above the lowest floor level having building access which is subject to the provisions of Section 33414, California Building Code, relating to existing high-rise buildings.~~

~~**Note:** In accordance with Health and Safety Code Section 17920.7, the provisions of Sections 3413.3 through 3413.11 above shall apply only to multiple story structures existing on January 1, 1975, let for human habitation including, and limited to, apartments, houses, hotels and motels wherein rooms used for sleeping are let above the ground floor.~~

~~**3413.12 Fire alarms.**~~

~~**3413.12.1 General.** Every apartment house three or more stories in height or containing more than 15 apartments, every hotel three or more stories in height or containing 20 or more guest rooms, shall have installed therein an automatic or manually operated fire alarm system. Such fire alarm systems shall be so designed that all occupants of the building may be warned simultaneously and shall be in accordance with the California Fire Code. See Section 3414.14 for special requirements in buildings over 75 feet (22 860 mm) in height.~~

~~**Exception:** A fire alarm system need not be installed provided such apartment house or hotel is separated by an unpierced wall of not less than four hour fire resistance in buildings of Type IA, Type IIB, Type III or Type IV construction and two hour fire resistance in buildings of all other types of construction provided:~~

~~1. Areas do not exceed the number of apartments or guest rooms stipulated.~~

~~2. The fire-resistive wall conforms to the requirements of Section 706.6.~~
~~3. The wall complies with all other applicable provisions of the California Building Code.~~
~~4. The wall extends to all outer edges of horizontal projecting elements, such as balconies, roof overhangs, canopies, marquees or architectural projections.~~
~~5. No openings are permitted for air ducts or similar penetrations, except that openings for pipes, conduits and electrical outlets of copper, sheet steel or ferrous material shall be permitted through such wall and need not be protected, provided they do not unduly impair the required fire resistance of the assembly.~~
~~6. Tolerances around such penetrations shall be filled with approved noncombustible materials..~~

~~**3413.12.2 Installation.** The installation of all fire alarm equipment shall be in accordance with the California Fire Code.~~

~~**3413.13 Existing Group R Occupancy high-rise buildings.**~~

~~**3413.13.1 General.** Regardless of other provisions of these regulations relating to existing high-rise buildings, requirements relative to existing Group R-1 or Group R-2 Occupancies shall not be less restrictive than those established pursuant to Health and Safety Code Section 13143.2.~~

~~**3413.13.2 Corridor openings.** Openings in corridor walls and ceilings shall be protected by not less than 13/4-inch (44.5 mm) solid-bonded wood-core doors, 1/4-inch-thick (6 mm) wired glass conforming to Section 715.1, by approved fire dampers or by equivalent protection in lieu of any of these items. Transoms shall be fixed closed with material having a fire-resistive rating equal to 1/2-inch (12.7 mm) Type X gypsum wallboard or equivalent material installed on both sides of the opening.~~

~~**3413.13.3 Fire alarm systems.** Notwithstanding the provisions of Section 403, every existing high-rise building used for the housing of a Group R-1 or Group R-2 Occupancies shall have installed therein a fire alarm system conforming to this subsection.~~

~~**3413.13.3.1 General.** Every apartment house and every hotel shall have installed therein an automatic or manually operated fire alarm system. Such fire alarm systems shall be so designed that all occupants of the building may be warned simultaneously.~~

~~**3413.13.3.2 Installation.** The installation of all fire alarm equipment shall be in accordance with the California Fire Code.~~

~~**3413.13.3.3 Fire-extinguishing systems.** Automatic fire-extinguishing systems installed in any structure subject to these regulations shall have an approved flow indicator electrically interconnected to the required fire alarm system.~~

~~SECTION 3414~~
~~EXISTING HIGH-RISE BUILDINGS [SFM]~~

~~**3414.1 Scope and definition.** The provisions of Sections 3414.1 through 3414.27 shall apply to every existing high-rise building of any type of construction or occupancy having floors (as measured from the top of the floor surface) used for human occupancy located more than 75 feet (22 860 mm) above the lowest floor level having building access.~~

~~**Exceptions:**~~
~~1. Hospitals, as defined in Section 1250 of the Health and Safety Code.~~
~~2. The following structures, while classified as high-rise buildings, shall not be subject to the provisions of Sections 3414.1 through 3414.27, but shall conform to all applicable provisions of these regulations.~~
~~2.1 Building used exclusively as open parking garages.~~
~~2.2 Buildings where all floors above the 75 foot (22 860 mm) level are used exclusively as open parking garages.~~
~~2.3 Floors of buildings used exclusively as open parking garages and located above all other floors used for human occupancy.~~
~~2.4 Buildings such as power plants, look-out towers, steeples, grain houses, and similar structures, when so determined by the enforcing agency.~~
~~2.5 Buildings used exclusively for jails and prisons. For the purposes of this section, "building access" shall mean an exterior door opening conforming to all of the following:~~

~~1. Suitable and available for fire department use.~~
~~2. Located not more than 2 feet (610 mm) above the adjacent ground level.~~
~~3. Leading to a space, room or area having foot traffic communication capabilities with the remainder of the building.~~
~~4. Designed to permit penetration through the use of fire department forcible entry tools and equipment unless other approved arrangements have been made with the fire authority having jurisdiction.~~

~~"Existing high-rise structure" means a high-rise structure, the construction of which is commenced or completed prior to July 1, 1974.~~

~~For the purpose of this section, construction shall be deemed to have commenced when plans and specifications are more than 50 percent complete and have been presented to the local jurisdiction prior to July 1, 1974. Actual construction of such buildings shall commence on or before January 1, 1976, unless all provisions for new buildings have been met.~~

~~**Note:** it is the intent of this section that, in determining the level form which the highest occupied floor is to be measured, the enforcing agency should exercise reasonable judgment, including consideration of overall accessibility to the building by fire department personnel and vehicular equipment. When a building is situated on sloping terrain and there is building access on more than one level, the enforcing agency may select the level which provides the most logical and adequate fire department access.~~

~~**3414.2 Compliance data.** Except as may be otherwise specified, existing high-rise building shall conform to the applicable requirements of these regulations by April 26, 1979.~~

~~**Exception:** The period of compliance may be extended upon showing of good cause for such extension if a systematic and progressive plan of correction is submitted to, and approved by, the enforcing agency. Such extension shall not exceed two years from the date of approval of such plan. Any plan of correction submitted pursuant to this exception shall be submitted and approved on or before April 26, 1979.~~

~~**3414.3 Continued use.** Existing high-rise building may have their use continued if they conform, or are made to conform, to the intent of the provisions of Sections 3414.5 through 3414.27 to provide for the safety of the occupants of the high-rise buildings and person involved in fire suppression activities.~~

~~**3414.4 Alternate protection.** Alternate means of egress, fire walls or fire barriers, smoke barriers, automatic fire detection or fire extinguishing systems, or other fire protection devices, equipment or installations may be approved by the enforcing agency to provide reasonable and adequate life safety as intended by Sections 3414.5 through 3414.27 for existing high-rise buildings.~~

~~**3414.5 Basic provisions.** The provisions outlined in Sections 3414.1 through 3414.27 are applicable to every existing highrise building.~~

~~**3414.6 Minimum construction.** Existing wood lath and plaster, existing 1/2 inch (12.7 mm) gypsum wallboard, existing installations of 1/2 inch thick (12.7 mm) wired glass which are or are rendered inoperative and fixed in a closed position, or other existing materials having similar fire resistive capabilities shall be acceptable. All such assemblies shall be in good repair, free of any condition which would diminish their original fire resistive characteristics.~~

~~Where 13/4 inch (44.5 mm) solid bonded wood core doors are specified in these regulations for existing high-rise buildings, new or existing 13/8 inch (34.9 mm) doors shall be acceptable where existing framing will not accommodate a 13/4 inch (44.5 mm) door.~~

~~**Note:** It is the intent of this provisions that existing wood frames may have their use continued.~~

~~**3414.7 New construction.** All new construction shall be composed of materials and assemblies of materials conforming to the fire resistive provisions of these regulations. In no case shall enclosure walls be required to be of more than one hour fire resistive construction.~~

~~**Exception:** When approved by the enforcing agency, materials specified in Section 3414.6 may be used for new construction when necessary to maintain continuity of design and measurement of existing construction.~~

~~**3414.8 Exits.** *Every floor from an existing high-rise building shall have access to two separate means of egress, one of which, when approved by the enforcing agency, may be an existing exterior fire escape. New installations of smoke-proof enclosures shall not be required.*~~

~~***Note:** In determining the adequacy of exits and their design, Chapter 10 may be used as a guide. It is the intent of this section that every existing high-rise building need not mandatorily conform or be made to conform with the requirements for new high-rise buildings. Reasonable judgment in the application of requirements must be exercised by the enforcing agency.*~~

~~**3414.9 Fire escapes.** *An existing fire escape in good structural condition may be acceptable as one of the required means of egress from each floor. Access to such fire escapes may be by any one of the following:*~~

~~*Through a room between the corridor and the fire escape if the door to the room is operable from the corridor side without the use of any key, special knowledge or effort.*~~
~~*By a door operable to a fire escape from the interior without the use of any key, special knowledge or effort.*~~
~~*By a window operable from the interior. Such window shall have a minimum dimension of 29 inches (737 mm) when open.*~~
~~*The sill shall not be more than 30 inches (762 mm) above the floor and landing.*~~

~~**3414.10 Protection of exterior openings.** *When an existing fire escape is accepted as one of the require means of egress, openings onto the fire escape landing and openings within 5 feet (1524 mm) horizontally of the landings shall be protected in a manner acceptable to the enforcing agency.*~~

~~**3414.11 Locking of stairway doors.** *When exit doors from corridors to exit stairways are locked to prohibit access from the stairway side, the locking mechanisms shall be retracted to the unlocked position upon failure of electrical power and a telephone or other two-way communication system connected to an approved emergency service that operates continuously shall be provided at not less than every fifth floor in each required stairway. In lieu thereof, master keys which will unlock all such doors from the stairway side shall be provided in such numbers and locations as approved by the enforcing agency.*~~

~~**3414.12 Enclosures.** *Interior vertical shafts, including but not limited to, elevators, stairway and utility, shall be enclosed with construction as set forth in Section 3414.6.*~~

~~**3414.13 Opening protection.** *Doors in other than elevators, which shall be of a type acceptable to the enforcing agency, shall be approved one-hour, fire rated, tight fitting or gasketed doors or equivalent protection, and shall be of the normally closed type, self-closing or a type which will close automatically in accordance with Section 715.*~~

~~***Exception:** In lieu of stairway enclosures, smoke barriers may be provided in such a manner that fire and smoke will not spread to other floors or otherwise impair exit facilities. In these instances, smoke barriers shall not be less than one-hour fire resistive with openings protected by not less than approved one-third hour, fire-rated, tight fitting or gasketed doors. Such doors shall be of the self closing type or of a type which will close automatically in the manner specified in Section 715.*~~

~~*Doors crossing corridors shall be provided with wired glass vision panels set in approved steel frames. Doors for elevators shall not be of the open-grille type.*~~

~~**3414.14 Fire alarm system.** *Every existing high-rise building shall be provided with an approved fire alarm system. In department stores, retail sales stores and similar occupancies where the general public is admitted, such systems shall be of a type capable of alerting staff and employees. In office buildings and all other high rise buildings, such systems shall be of a type capable of alerting all occupants simultaneously.*~~

~~***Exceptions:***~~
~~*1. In areas of public assemblage, the type and location of audible appliances shall be as determined by the enforcing agency.*~~
~~*2. When acceptable to the enforcing agency, the occupant voice notification system required by Section 3414.173414.20 may be used in lieu of the fire alarm system required by Section 3414.14.*~~

~~**3414.15 Existing systems.** *Existing fire systems, when acceptable to the enforcing agency, shall be deemed as conforming to the provisions of these regulations. For requirements for existing Group R-1 Occupancies, see Section 3412.13.*~~

~~**3414.16 Annunciation.** *When a new fire alarm system is installed, it shall be connected to an annunciator panel installed in a location approved by the enforcing agency. For purposes of annunciation, zoning shall be in accordance with Section 907.6.3.4907.6.4.4.*~~

~~**3414.17 Monitoring.** *Shall be in accordance with Section 907.6.5907.6.6.*~~

~~**3414.18 Systems interconnection.** *When an automatic fire detection system or automatic extinguishing system is installed, activation of such system shall cause the sounding of the fire alarm notification appliances at locations designated by the enforcing agency.*~~

~~**3414.19 Manual fire alarm boxes.** *A manual fire alarm box shall be provided in the locations designated by the enforcing agency. Such locations shall be where boxes are readily accessible and visible and in normal paths of daily travel by occupants of the building.*~~

~~**3414.20 Emergency voice/alarm communication system.** *An approved emergency voice/alarm system shall be provided in every existing high-rise building which exceeds 150 feet (45 720 mm) in height measured in the manner set forth in Section 3412.1. Such system shall provide communication from a location available to and designated by the enforcing agency to not less than all public areas. The emergency voice/alarm system may be combined with a fire alarm system provide the combined system has been approved and listed by the State Fire Marshal. The sounding of a fire alarm signal in any given area or floor shall not prohibit voice communication to other areas of floors. Combination systems shall be designed to permit voice transmission to override the fire alarm signal, but the fire alarm signal shall not terminate in less than three minutes.*~~

~~**3414.21 Fire department system.** *When it is determined by test that portable fire department communication equipment is ineffective, a communication system acceptable to the enforcing agency shall be installed within the building to permit emergency communication between fire suppression personnel.*~~

~~**3414.22 Interior wall and ceiling finish.** *Interior wall and ceiling finish of exitways shall conform to the provisions of Chapter 8. Where the materials used in such finishes do not conform to the provisions of Chapter 8, such finishes may be surfaced with an approved fire retardant coating.*~~

~~**3414.23 Ventilation.** *Natural or mechanical ventilation for the removal of products of combustion shall be provided in every story of an existing high-rise building. Such ventilation shall be any one or combination of the following: Panels or windows in the exterior wall which can be opened. Such venting facilities shall be provided at the rate of at least 20 square feet (1.86m2) of opening per 50 lineal feet (15 240 lineal mm) of exterior wall in each story, distributed around the perimeter at not more than 50 foot (15 240 mm) intervals on at least two sides of the building. Approved fixed tempered glass may be used in lieu of openable panels or windows. When only selected panels or windows are of tempered glass, they shall be clearly identified as required by the enforcing agency. Any other design which will produce equivalent results.*~~

~~**3414.24 Smoke control systems.** *Existing air circulation systems shall be provided with an override switch in a location approved by the enforcing agency which will allow for the manual control of shutdown of the systems.*~~

~~**Exception:** *Systems which serve only a single floor, or portion thereof, without any penetration by ducts or other means into adjacent floors.*~~

~~**3414.25 Elevator recall smoke detection.** *Smoke detectors for emergency operation of elevators shall be provided as required by Section 3003.*~~

~~**3414.26 Exit signs and illumination.** *Exits and stairways shall be provided with exit signs and illumination as required by Sections 1011.1 and 1011.2.*~~

~~**3414.27 Automatic sprinkler system-Existing high-rise buildings.** *Regardless of any other provisions of these regulations, every existing high-rise building of Type II-B, Type III-B or Type V-B construction shall be provided with an approved automatic sprinkler system conforming to NFPA 13.*~~

~~SECTION 3415~~
~~EXISTING GROUP I OCCUPANCIES [SFM]~~

~~**3415.1 General.** *Existing buildings housing existing protective social care homes or facilities established prior to March 4, 1972 may have their use continued if they conform, or are made to conform, to the following provisions:*~~

~~**3415.2 Use of floors.** *The use of floor levels in buildings of Type III, IV or V nonfire-rated construction may be as follows: Nonambulatory—first floor only; Ambulatory—not higher than the third floor level, provided walls and partitions are constructed of materials equal in fireresistive quality to that of wood lath and plaster in good repair and all walls are firestopped at each floor level.*~~

~~**3415.3 Enclosure of exits and vertical openings.** *Except for two-story structures housing ambulatory guests, all interior stairs shall be enclosed in accordance with Chapter 10. In lieu of stairway enclosures, floor separations or smoke barriers may be provided in such a manner that fire and smoke will not spread rapidly to floors above or otherwise impair exit facilities. In these instances, floor separations or smoke barriers shall have a fire resistance equal to not less than 1/2 inch (13 mm) gypsum wall board on each side of wood studs with openings protected by not less than a 13/4 inch (44.5 mm) solid bonded wood core door of the self-closing type. All other vertical openings shall be enclosed in accordance with the provisions of Section 3414.6 and 3414.13.*~~

~~**3415.4 Exit access.** *Each floor or portion thereof of buildings used for the housing of existing protective social care homes or facilities shall have access to not less than two exits in such a manner as to furnish egress from the building or structure in the event of an emergency substantially equivalent to the provisions of Chapter 10.*~~

~~**3415.5 Corridor openings.** *Openings from rooms to interior corridors shall be protected by not less than 13/4 inch (44.5 mm) solid bonded wood core doors. Transoms and other similar openings shall be sealed with materials equivalent to existing corridor wall construction.*~~

~~**3415.6 Interior finishes.** *Interior wall and ceiling finishes shall conform to the requirements for a Group R-1 Occupancy as specified in Chapter 8.*~~

~~**3415.7 Automatic fire sprinklers.** *Automatic sprinkler systems shall be installed in existing protective social care occupancies in accordance with the provisions of Section 903.2.6.*~~

~~**3415.8 Fire alarm systems.** *Automatic fire alarm systems shall be installed in existing protective social care homes or facilities in accordance with the provisions of Section 907.2.6.*~~

~~**Exception:** *When an approved automatic sprinkler system conforming to Section 903.2.6 is installed, a separate fire alarm system as specified in this section need not be provided.*~~

~~SECTION 3416~~
~~EXISTING GROUP L OCCUPANCIES [SFM]~~

~~**3416 Existing Group L Occupancies.**~~

~~**3416.1 Repairs general.** *Additions, alterations or repairs may be made to any building or structure without requiring the existing building or structure to comply with all the requirements of this code section, provided the addition, alteration, or repair conforms to the requirements of this section.*~~

~~**3416.2 Unsafe condition.** *Additions, repairs or alterations shall not be made to an existing building or structure that will cause the existing building or structure to be in violation of any of the provisions of this code, nor shall such additions or alterations cause the existing building or structure to become unsafe, or to be in violation of any of the provisions of this code. An unsafe condition shall be deemed to have been created if an addition or alteration will cause the existing building or structure to become structurally unsafe or overloaded; will not provide adequate egress in compliance with the provisions of this code or will obstruct existing exits; will create a fire hazard; will reduce required fire resistance or will otherwise create conditions dangerous to human life.*~~

~~**3416.3 Changes in use or occupancy.** *Any buildings that have alterations or additions, which involves a change in use or occupancy, shall not exceed the height, number of stories and area permitted for new buildings*~~

~~**3416.4 Buildings not in compliance with code.** Additions or alterations shall not be made to an existing building or structure when such existing building or structure is not in full compliance with the provisions of this code except when such addition or alteration will result in the existing building or structure being no more hazardous, based on life safety, fire safety and sanitation, than before such additions or alterations are undertaken.~~

~~**3416.5 Maintenance of structural and fire resistive integrity.** Alterations or repairs to an existing building or structure that are nonstructural and do not adversely affect any structural member of any part of the building or structure having required fire resistance may be made with the same materials of which the building or structure is constructed. The installation or replacement of glass shall be as required for new installations.~~

~~**3416.6 Continuation of existing use.** Buildings in existence at the time of the adoption of this code may have their existing use or occupancy continued if such use or occupancy was legal at the time of the adoption of this code, provided such continued use is not dangerous to life.~~

~~**3416.7 Maximum allowable quantities.** Laboratory suites approved prior to January 1, 2008 shall not exceed the maximum allowable quantities listed in Tables 3416.1 and 3416.2.~~

~~**TABLE 3416.7(1) EXEMPT AMOUNTS OF HAZARDOUS MATERIALS, LIQUIDS AND CHEMICALS PRESENTING A PHYSICAL HAZARD BASIC QUANTITIES PER LABORATORY SUITE[1]**~~
~~**When two units are given, values within parentheses are in cubic feet (Cu. Ft.) or pounds (Lbs.)**~~

CONDITION		STORAGE			USE CLOSED SYSTEMS			USE OPEN SYSTEMS		
MATERIAL	CLASS	Solid Lbs. (Cu. Ft.)	Liquid Gallons (Lbs.)	Gas Cu. Ft.	Solid Lbs. (Cu. Ft.)	Liquid Gallons (Lbs.)	Gas Cu. Ft.	Solid Lbs. (Cu. Ft.)	Liquid Gallons (Lbs.)	Gas Cu. Ft.
1.1 Combustible liquid	II	—	120[2]	—	—	120	—	—	30	—
	III-A	—	330[2]	—	—	330	—	—	80	—
	III-B	—	13,200[2]	—	—	13,200	—	—	3,300	—
1.2 Combustible dust lbs./1000 cu. ft.		1	—	—	1	—	—	1	—	—
1.3 Combustible fiber (loose) (baled)		(100) (1,000)	— —	— —	(100) (1,000)	— —	— —	(20) (200)	— —	— —
1.4 Cryogenic, flammable or oxidizing			45	—	—	45	—	—	10	—
2.1 Explosives		12	(1)[2]	—	1/4	(1/4)	—	1/4	(1/4)	—
3.1 Flammable solid		125[2]	—	—	25	—	—	25	—	—
3.2. Flammable gas (gaseous) (liquefied)		— —	— 15[2]	750[2] —	— —	— 15[2]	750[2] —	— —	— —	— —
3.3 Flammable liquid Combination I-A, I-B, I-C	I-A	—	30[2]	—	—	30	—	—	10	—
	I-B	—	60[2]	—	—	60	—	—	15	—
	I-C	—	90[2]	—	—	90	—	—	20	—
		—	120[2]	—	—	120	—	—	30	—
4.1 Organic peroxide, unclassified detonatable		1[2]	(1)[2]	—	1/4	(1/4)	—	1/4	(1/4)	—
4.2 Organic peroxide	I II III IV V	5[2] 50[2] 125[2] 500 N.L.	(5)[2] (50)[2] (125)[2] (500) N.L.	— — — — —	(1) 50 125 500 N.L.	(1) (50) (125) (500) N.L.	— — — — —	1 10 25 100 N.L.	1 (10) (25) (100) N.L.	— — — — —

~~4.3 Oxidizer~~	~~4~~ ~~3~~ ~~2~~ ~~1~~	~~1~~[2] ~~10~~[2] ~~250~~[2] ~~1,000~~[2]	~~(1)~~[2] ~~(10)~~[2] ~~(250)~~[2] ~~(1,000)~~[2]	— — — —	~~1/4~~[2] ~~2~~ ~~50~~ ~~1,000~~	~~(1/4)~~ ~~(2)~~ ~~(250)~~ ~~(1,000)~~	— — — —	~~¼~~ ~~2~~ ~~50~~ ~~200~~	~~(1/4)~~ ~~(2)~~ ~~(50)~~ ~~(200)~~	— — — —
~~4.4 Oxidizer.Gas~~ ~~(gaseous)~~ ~~(liquefied)~~		— —	— ~~15~~[2]	~~1,500~~[2] —	— —	— ~~15~~[2]	~~1,500~~[2] —	— —	— —	— —
~~5.1 Pyrophoric~~		~~4~~[2]	~~(4)~~[2]	~~50~~[2]	~~1~~	~~(1)~~	~~10~~[2]	~~0~~	~~0~~	~~0~~
~~6.1 Unstable (reactive)~~	~~4~~ ~~3~~ ~~2~~ ~~1~~	~~1~~[2] ~~5~~[2] ~~50~~[2] ~~125~~[2]	~~(1)~~[2] ~~(5)~~[2] ~~(50)~~[2] ~~(125)~~[2]	~~10~~[2] ~~50~~[2] ~~250~~[2] ~~750~~[2]	~~1/4~~ ~~1~~ ~~50~~ ~~125~~	~~(1/4)~~ ~~(1)~~ ~~(50)~~ ~~(125)~~	~~2~~[2] ~~10~~[2] ~~250~~[2] ~~750~~[2]	~~1/4~~ ~~1~~ ~~10~~ ~~25~~	~~(1/4)~~ ~~(1)~~ ~~(10)~~ ~~(25)~~	~~0~~ ~~0~~ ~~0~~ ~~0~~
~~7.1 Water (reactive)~~	~~3~~ ~~2~~ ~~1~~	~~5~~[2] ~~50~~[2] ~~125~~[2]	~~(5)~~[2] ~~(50)~~[2] ~~(125)~~[2]	— — —	~~5~~ ~~50~~ ~~125~~	~~(5)~~ ~~(50)~~ ~~(125)~~[2]	— — —	~~1~~ ~~10~~ ~~25~~	~~(1)~~ ~~(10)~~ ~~(25)~~	— — —

~~[1] A laboratory suite is a space up to 10,000 square feet (929 m2) bounded by not less than a one-hour fire-resistive occupancy separation within which the exempt amounts of hazardous materials may be stored, dispensed, handled or used. Up through the third floor and down through the first basement floor, the quantity in this table shall apply. Fourth, fifth and sixth floors and the second and third basement floor level quantity shall be reduced to 75 percent of this table. The seventh through 10th floor and below the third basement floor level quantity shall be reduced to 50 percent of this table.~~

~~[2] Quantities may be increased 100 percent when stored in approved exhausted gas cabinets, exhausted enclosures or fume hoods.~~

~~**TABLE 3416.7(2) EXEMPT AMOUNTS OF HAZARDOUS MATERIALS, LIQUIDS AND CHEMICALS PRESENTING A HEALTH HAZARD MAXIMUM QUANTITIES ER LABORATORY SUITE[1]**~~
~~**When two units are given, values within parentheses are in pounds (Lbs.)**~~

~~MATERIAL~~	~~STORAGE~~			~~USE CLOSED SYSTEMS~~			~~USE OPEN SYSTEMS~~	
	~~Solid Lbs.~~	~~Liquid Gallons (Lbs.)~~	~~Gas Cu. Ft.~~	~~Solid Lbs.~~	~~Liquid Gallons (Lbs.)~~	~~Gas Cu. Ft.~~	~~Solid Lbs.~~	~~Liquid Gallons (Lbs.)~~
~~1. Corrosives~~	~~5,000~~	~~500~~	~~650~~[2]	~~5,000~~	~~500~~	~~650~~	~~1,000~~	~~100~~
~~2a. Highly toxics~~[2]	~~40~~	~~10~~	~~65~~	~~5~~	~~1~~	~~65~~	~~2~~	~~1/4~~
~~2b. Toxics~~	~~500~~	~~50~~	~~650~~[2]	~~500~~	~~50~~	~~650~~	~~5~~	~~1/2~~
~~3. Irritants~~	~~5,000~~	~~500~~	~~650~~	~~5,000~~	~~500~~	~~650~~	~~1,000~~	~~100~~
~~4. Sensitizers~~	~~5,000~~	~~500~~	~~650~~	~~5,000~~	~~500~~	~~650~~	~~1,000~~	~~100~~
~~5. Other health hazards~~	~~5,000~~	~~500~~	~~650~~	~~5,000~~	~~500~~	~~650~~	~~1,000~~	~~100~~

~~[1] A laboratory suite is a space up to 10,000 square feet (929 m2) bounded by not less than a one-hour fire-resistive occupancy separation within which the exempt amounts of hazardous materials may be stored, dispensed, handled or used. Up through the third floor and down through the first basement floor, the quantity in this table shall apply. Fourth, fifth and sixth floors and the second and third basement floor level quantity shall be reduced to 75 percent of this table. The seventh through 10th floor and below the third basement floor level quantity shall be reduced to 50 percent of this table.~~

~~[2] Permitted only when stored or used in approved exhausted gas cabinets, exhausted enclosures or fume hoods. Quantities of high toxics in use in open systems need not be reduced above the third floor or below the first basement floor level. Individual container size shall be limited to 2 pounds (0.91 kg) for solids and 1/4 gallon (0.95 L) for liquids.~~

CHAPTER 35
REFERENCED STANDARDS

This chapter lists the standards that are referenced in various sections of this document. The standards are listed herein by the promulgating agency of the standard, the standard identification, the effective date and title, and the section or sections of this document that reference the standard. The application of the referenced standards shall be as specified in Sections *1.1.5, 1.1.7 and* 102.4.

ASME

American Society of Mechanical Engineers
Three Park Avenue
New York, NY 10016-5990

Standard reference number	Title	Referenced in code section number
A17.1/CSA B44 *California Code of Regulations, Title 8, Division 1, Chapter 4, Subchapter 6, Elevator Safety Orders*	Safety Code for Elevators and Escalators	1607.9.1
BPE – 2009	*Bio-processing Equipment Standard*	

ASTM

ASTM International
100 Barr Harbor Drive
West Conshohocken, PA 19428-2959

Standard reference number	Title	Referenced in code section number
E648–04	*Standard Test Method for Critical Radiant Flux of Floor Covering Systems Using a Radiant Heat Energy Source*	*804.4.1, 804.4.2*
E662–09	*Standard Test Method for Specific Optical Density of Smoke Generated by Solid Materials*	*804.4.1, 804.4.2*

FM

Factory Mutual
Standards Laboratories Department
1151 Boston-Providence Turnpike
Norwood, MA 02062

Standard reference number	Title	Referenced in code section number
3260–00	*Radiant Energy-Sensing Fire Detectors for Automatic Fire Alarm Signaling.*	
3011–99	*Approval Standard for Central Station Service for Fire Alarm and Protective Equipment Supervision*	
4430–80	*Acceptance Criteria for Smoke and Heat Vents*	*910.3.1*

ICC

International Code Council, Inc.
500 New Jersey Ave, NW 6th Floor
Washington, DC 20001

Standard		Referenced

reference number	Title	in code section number
ICC ES AC 331	*Acceptance Criteria for Smoke and Heat Vents*	*910.3.1*
ICC ES AC77	*Acceptance Criteria for Smoke Containment Systems Used with Fire-resistance-rated Elevator Holstway Doors and Frames*	*707.14.1*
~~ICC/ANSI A117.1—09~~	~~Accessible and Usable Buildings and Facilities~~	~~406.2.2, 907.5.2.3.4, 1007.9, 1010.1, 1010.6.5, 1010.9, 1011.3, 1022.8, 1101.2, 1102.1, 1104.4, 1106.7, 1107.2, 1108.2.2, 1108.2.3, 1108.4.1.1, 1108.4.1.2, 1108.4.1.4, 1108.4.1.5, 1109.1, 1109.2, 1109.2.1.1, 1109.2.2, 1109.2.3, 1109.3, 1109.4, 1109.8, 1109.13, 2902.4, 3001.3, 3008.13.1, 3008.13.2, 3411.6, 3411.8.2, 3411.8.3, E101.2, E104.2, E104.2.1, E104.3, E104.3.4, E105.1, E105.2.1, E105.2.2, E105.3, E105.4, E105.6, E106.2, E106.3, E106.4, E106.4.9, E106.5, E107.2, E107.3, E108.3, E108.4, E109.2.1, E109.2.2.1, E109.2.2.2, E109.2.2.3, E109.2.3, E109.2.5, E109.2.6, E109.2.8, E110.2, E110.4~~
~~IECC—15~~	~~International Energy Conservation Code®~~	~~101.4.6, 1203.3.2, 1301.1.1~~
~~IFC—15~~	~~International Fire Code®~~	~~101.4.5, 102.6, 201.3, 307.1, Table 307.1(1), Table 307.1(2), 307.1.1, 307.2, 403.4.4, 404.2, 406.5.1, 406.6.1, 410.3.6, 411.1, 412.1, 412.6.1, 413.1, 414.1.1, 414.1.2, 414.1.2.1, 414.2, 414.2.5, Table 414.2.5(1), Table 414.2.5(2), 414.3, 414.5, 414.5.1, Table 414.5.1, 414.5.2, 414.5.4, 414.5.5, 414.6, 415.1, 415.2, 415.3, 415.3.1, Table 415.3.1, Table 415.3.2, 415.6, 415.6.1, 415.6.1.4, 415.6.2, 415.6.2.3, 415.6.2.5, 415.6.2.7, 415.6.2.8, 415.6.2.9, 415.6.3, 415.6.4, 415.7, 415.8.1, 415.8.2.7, 415.8.5.1, 415.8.7.2, 415.8.9.3, 415.8.10.1, 416.1, 421.1, 421.7, 507.3, 707.1, 901.2, 901.3, 901.5, 901.6.2, 903.2.7.1,Table 903.2.11.6, 903.2.12 903.5, 904.2.1, 905.1, 905.3.6, 906.1, 907.1.8, 907.2.5, 907.2.13.2, 907.2.15, 907.2.16, 907.6.5, 907.8, 909.20, 910.2.2, 1001.3, 1203.4.2, 1203.5, 2702.1, 2702.2.9, 2702.2.11, 2702.2.12, 2702.2.13, 2702.3, 3102.1, 3103.1, 3309.2, 3401.3, 3412.3.2, 3412.6.8.1, 3412.6.14, 3412.6.14.1~~
~~IFGC—15~~	~~International Fuel Gas Code®~~	~~101.4.1, 201.3, Table 307.1(1), 415.6.3, 2113.11.1.2, 2113.15, 2801.1, 3401.3, A101.2~~
~~IMC—15~~	~~International Mechanical Code®~~	~~101.4.2, 201.3, 307.1, Table 307.1(1), 406.4.2, 406.6.3, 406.6.5, 409.3, 412.6.6, 414.1.2, 414.3, 415.6.1.4, 415.6.2, 415.6.2.8, 415.6.3, 415.6.4, 415.8.11.1, 416.3, 421.5, 603.1, 603.1.1, 603.1.2, 708.2, 716.2.2, 716.5.4, 716.6.1, 716.6.2, 716.6.3, 717.5, 719.1, 719.7, 903.2.11.4, 904.2.1, 904.11, 908.6, 909.1, 909.10.2, 1015.5, 1018.5.1, 1203.1, 1203.2.1, 1203.4.2, 1203.4.2.1, 1203.5, 1209.3, 2304.5, 2801.1, 3004.3.1, 3401.3, 3412.6.7.1, 3412.6.8, 3412.6.8.1, A101.2~~
~~IPC—15~~	~~International Plumbing Code®~~	~~101.4.3, 201.3, 415.6.4, 717.5, 903.3.5, 912.5, 1206.3.3, 1503.4, 1805.4.3, 2901.1, Table 2902.1, 3305.1, 3401.3, A101.2~~
~~IPMC—15~~	~~International Property Maintenance Code®~~	~~101.4.4, 102.6, 103.3, 3401.3, 3412.3.2~~
~~IPSDC—15~~	~~International Private Sewage Disposal Code®~~	~~101.4.3, 2901.1, 3401.3~~
~~IRC—15~~	~~International Residential Code®~~	~~101.2, 308.2, 308.5, 310.1, 2308.1, 3401.3~~
~~IWUIC—15~~	~~International Wildland-Urban Interface Code™~~	~~Table 1505.1~~

NFPA	National Fire Protection Association 1 Batterymarch Park

Quincy, MA 02269-9101

Standard reference number	Title	Referenced in code section number
~~10—13~~	~~Portable Fire Extinguishers~~	
11—10	Low- Medium- and High~~*Medium- and High*~~-Expansion Foam	
13—~~13~~16	Installation of Sprinkler Systems *as amended**	708.2, 903.3.1.1, 903.3.2, 903.3.5.1.1, 903.3.5.2, 904.11, 905.3.4, 907.6.3, 1613.6.3, 1616.9.5, 1616.10.17

NFPA 13, Amended Sections as follows:

Revise Section 2.2 and add publications as follows:
2.2 NFPA Publications.
NFPA 25, *Standard for the Inspection, Testing, and Maintenance of Water-Based Fire Protection Systems, 2013 California* edition.

Revise Section 8.15.1.2.15 as follows:
8.15.1.2.15 Exterior columns under 10 ft² (0.93m2) in *total* area, formed by studs or wood joist, *with no sources of ignition within the column*, supporting exterior canopies that are fully protected with a sprinkler system, shall not require sprinkler protection.

~~***Revise Section 8.15.5.6.17 as follows:***~~ ***Add new Sections 8.15.5.6.1 as follows:***
~~***8.15.5.7***~~***8.15.5.6.1*** *The sprinkler required at the top and bottom of the elevator hoistway by 8.15.5.6 shall not be required where permitted by Chapter 30 of the California Building Code.*

Revise Section 8.15.7.1* as follows:
8.15.7.1* Unless the requirements of 8.15.7.2 or 8.15.7.3 are met, sprinklers shall be installed under exterior roofs, canopies, porte-cochere, balconies, decks, or similar projections exceeding 4 ft (1.2 m) in width.

Revise Section 8.15.7.2* as follows:
8.15.7.2* Sprinklers shall be permitted to be omitted where the exterior canopies, roofs, porte-cocheres, balconies, decks, or similar projections are constructed with materials that are noncombustible, limited-combustible, or fire retardant treated wood as defined in NFPA 703, *Standard for Fire Retardant–Treated Wood and Fire-Retardant Coatings for Building Materials*.

Delete Section A.8.15.7.2 of Annex

Revise Section 8.15.7.3
8.15.7.3 Sprinklers shall be permitted to be omitted from below the canopies, roofs, balconies, decks, or similar projections are combustible construction, provided the exposed finish material on the roof, *or* canopy is noncombustible, limited-combustible, or fire retardant treated wood as defined in NFPA 703, *Standard for Fire Retardant–Treated Wood and Fire-Retardant Coatings for Building Materials*, and the roofs, *or* canopies contains only sprinklered concealed spaces or any of the following unsprinklered combustible concealed spaces:
(1) Combustible concealed spaces filled entirely with noncombustible insulation
(2) Light or ordinary hazard occupancies where noncombustible or limited-combustible ceilings are directly attached to the bottom of solid wood joists so as to create enclosed joist spaces 160 ft³ (4.5 m³) or less in volume, including space below insulation that is laid directly on top or within the ceiling joists in an otherwise sprinklered attic *[See ~~11.2.3.1.4(8)(d)~~11.2.3.1.5.2(9)]*.
(3) Concealed spaces over isolated small roofs, or canopies not exceeding 55 ft² (5.1m²)

Delete language to section 8.15.7.4 and reserve section number.
8.15.7.4 ***Reserved.***

Revise Annex Section A.8.15.7.5 as follows:
A. 8.15.7.5 The presence of planters, newspaper machines and *similar items*, should not be considered storage .

Add new Sections 8.15.7.6 as follows:

8.15.7.6 *Sprinklers may be omitted for following structures:*
(1) Solar photovoltaic panel structures with no use underneath. Signs may be provided, as determined by the enforcing agency prohibiting any use underneath including storage.
(2) Solar photovoltaic (PV) panels supported by framing that have sufficient uniformly distributed and unobstructed openings throughout the top of the array (horizontal plane) to allow heat and gases to escape, as determined by the enforcing agency.

Add new Sections 8.16.1.1.1.4 and 8.16.1.1.1.5 as follows:

8.16.1.1.1.4 *Where a system includes floor control valves, a hydraulic design information sign containing information for the floor shall be provided at each floor control valve. A hydraulic design information sign shall be provided for each area calculated. The installing contractor shall identify a hydraulically designed sprinkler system with a permanently marked weatherproof metal or rigid plastic sign secured with corrosion resistant wire, chain, or other approved means. Such signs shall be placed at the alarm valve, dry pipe valve, preaction valve, or deluge valve supplying the corresponding hydraulically designed area.*

8.16.1.1.1.5 *Control valves, check valves, drain valves, antifreeze valves shall be readily accessible for inspection, testing, and maintenance. Valves located more than 7 feet above the finished floor shall be provided with a means of opening and closing the valve from the floor level.*

Add new Sections ~~8.16.1.7, 8.16.1.7.1, 8.16.1.7.1.1, 8.16.1.7.1.2, 8.16.1.7.1.2, 8.16.1.7.1.3, 8.16.1.7.2,~~ 8.16.1.6, 8.16.1.6.1, 8.16.1.6.1.1, 8.16.1.6.1.2, 8.16.1.6.1.3, 8.16.1.6.2 as follows:

~~8.16.1.7~~8.16.1.6 Sectional Valves.

~~8.16.1.7.1~~8.16.1.6.1 *Private fire service main systems shall have sectional control valves at appropriate points in order to permit sectionalizing the system in the event of a break or for the making of repairs or extensions.*

~~8.16.1.7.1.1~~8.16.1.6.1.1 *Sectional control valves are not required when the fire service main system serves less than six fire appurtenances.*

~~8.16.1.7.1.2~~8.16.1.6.1.2 *Sectional control valves shall be indicating valves in accordance with Section ~~6.7.1.3~~6.6.1.3.*

~~8.16.1.7.1.3~~8.16.1.6.1.3 *Sectional control valves shall be located so that no more than five fire appurtenances are affected by shut-down of any single portion of the fire service main. Each fire hydrant, fire sprinkler system riser, and standpipe riser shall be considered a separate fire appurtenance. In-rack sprinkler systems shall not be considered as a separate appurtenance.*

~~8.16.1.7.1.4~~8.16.1.6.1.4 *The number of fire appurtenances between sectional control valves is allowed to be modified by the authority having jurisdiction.*

~~8.16.1.7.2~~8.16.1.6.2 A valve shall be provided on each bank where a main crosses a *body of* water *or* outside the building foundation(s) where the main or section of main runs under a building.

Add new Section 9.1.3.9.1.1 as follows:
9.1.3.9.1.1 *Powder-driven studs used for attaching hangers to the building structure are prohibited in Seismic design Categories C, D, E and F*

Revise Section 9.3.5.11.4 as follows:
9.3.5.11.4 *Where threaded pipe is used for sway bracing, it shall have a wall thickness of not less ~~then~~than Schedule 40.*

Replace Section ~~9.3.5.12.4~~9.3.5.12.5 as follows:
9.3.5.12.5 *Lag screws or power-driven fasteners shall not be used to attach braces to the building structure.*

~~Add language to the beginning of~~ Replace Section ~~9.3.5.12.6~~9.3.5.12.6 as follows:
~~9.3.5.12.6~~9.3.5.12.6 *Fastening methods other than those identified in ~~9.3.5.9~~9.3.5.12* shall not apply to other fastening methods, which shall be acceptable for use if certified by a registered professional engineer to support the loads determined in accordance with the criteria in 9.3.5.6. Calculations shall be submitted *to* the authority having jurisdiction.

Revise Section ~~9.3.5.12.7.2*~~9.3.5.12.8.4 as follows:

~~9.3.5.12.7.2*~~9.3.5.12.8.4 Concrete anchors other than those shown in ~~Figure 9.3.5.12.1~~Table 9.3.5.12.2(a) through Table 9.3.5.12.2(f) *and identified in 9.3.5.11.11* shall be acceptable for use where designed in accordance with the requirements of the building code and certified by a registered professional engineer.

Revise Section 9.3.6.1(3) as follows:

9.3.6.1*(3) *No. 12, 440 lb (200 Kg) wire installed at least 45 degrees from the vertical plane and anchored on both sides of the pipe. Powder-driven fasteners for attaching restraint is allowed to be used provided that the restraint component does not support the dead load.*

Revise Section ~~10.6.4~~10.4.3.1.1 as follows:

~~10.6.4~~10.4.3.1.1 Pipe joints shall not be located under foundation footings. *The pipe under the building or building foundation shall not contain mechanical joints.*

Exceptions:

1. Where allowed in accordance with ~~10.6.2~~10.4.3.2

2. Alternate designs may be utilized where designed by a registered professional engineer and approved by the enforcing agency.

Revise Section ~~11.2.3.1.4(4)(i)~~11.2.3.1.5.2(9) as follows:

~~11.2.3.1.4(4)(i)~~11.2.3.1.5.2(9) Exterior columns under 10 ft² (0.93m2) in *total* area, formed by studs or wood joist, *with no sources of ignition within the column,* supporting exterior canopies that are fully protected with a sprinkler system.

Revise Section 11.2.3.2.3.1 as follows:

11.2.3.2.3.1 Where listed quick-response sprinklers, excluding extended coverage quick-response sprinklers, are used throughout a system or portion of a system having the same hydraulic design basis, the system area of operation shall be permitted to be reduced without revising the density as indicated in Figure 11.2.3.2.3.1 when all of the following conditions are satisfied:

(1) Wet pipe system
(2) Light hazard occupancy
(3) 20 ft (6.1 m) maximum ceiling height
(4) There are no unprotected ceiling pockets as allowed by 8.6.7 and 8.8.7 exceeding 32 ft² (3 m²)

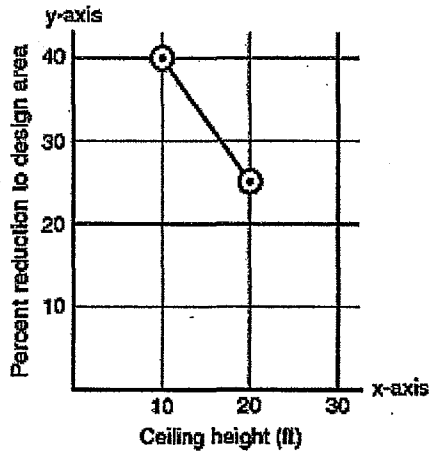

Note: $y = \frac{-3x}{2} + 55$

For ceiling height ≥ 10 ft and ≤ 20 ft, $y = \frac{-3x}{2} + 55$

For ceiling height < 10 ft, $y = 40$

For ceiling height > 20, $y = 0$

For SI units, 1 ft = 0.31 m.

~~**FIGURE 11.2.3.2.3.1 Design Area Reduction for Quick-Response Sprinklers.**~~
[Editorial Note: Delete Figure 11.2.3.2.3.1**]**

Revise Section 11.2.3.2.3.2 as follows:
11.2.3.2.3.2 The number of sprinklers in the design area shall never be less than *seven.*

Revise Section 12.1.1.2 as follows:
12.1.1.2 Early suppression fast-response (ESFR) sprinklers shall not be used in buildings with automatic heat or smoke vents unless the vents use a standard-response operating mechanism *with a minimum temperature rating of 360°F (182°C) or 100°F (56°C) above the operating temperature of the sprinklers, whichever is higher.*

~~Add Section 25.1(5)~~Revise Section 25.1 as follows:
25.1 Approval of Sprinkler Systems and Private Fire Service Mains. The installing contractor shall do the following:
(1) Notify the authority having jurisdiction and the property owner or property owner's authorized representative of the time and date testing will be performed.
(2) Perform all required testing *(see Section ~~24.2~~25.2)*
(3) Complete and sign the appropriate contractor's material and test certificate(s) *(see Figure ~~24.1~~25.1)*
(4) Remove all caps and straps prior to placing the sprinkler system in service
(5) Upon system acceptance by the authority having jurisdiction a label prescribed by Title 19 California Code of Regulations, Chapter 5 shall be affixed to each system riser.

Revise Section 25.4~~(2) and Add Section 24.5(3)~~ as follows:
25.4 Instructions. The installing contractor shall provide the property owner or the property owner's authorized representative with the following:

(1) All literature and instructions provided by the manufacturer describing proper operation and maintenance of any equipment and devices installed
(2) NFPA 25, *Standard for the Inspection, testing, and maintenance of Water-Based Fire Protection Systems, 2013 California Edition*
(3) Title 19, California Code of Regulations, Chapter 5, "Fire Extinguishing Systems".

~~Add sentence at the end of~~ Revise Section 25.5.1 as follows:
25.5.1 The installing contractor shall identify a hydraulically designed sprinkler system with a permanently marked weatherproof metal or rigid plastic sign secured with corrosion resistant wire, chain, or other approved means. Such signs shall be placed at the alarm valve, dry pipe valve, preaction valve, or deluge valve supplying the corresponding hydraulically designed area. *Pipe schedule systems shall be provided with a sign indicating that the system was designed and installed as a pipe schedule system and the hazard classification(s) included in the design."*

Revise Section 25.5.2~~(3) and Add Sections 25.5.2(7) to (14)~~ as follows:
25.5.2 The sign shall include the following information:
(1) Location of the design area or areas
(2) Discharge densities over the design area or areas
(3) *Required flow and pressure of the system at the base of the riser*
(4) Occupancy classification or commodity classification and maximum permitted storage height and configuration
(5) Hose stream allowance included in addition to the sprinkler demand
(6) The name of the installing contractor
(7) Required flow and pressure of the system at the water supply source.
(8) Required flow and pressure of the system at the discharge side of the fire pump where a fire pump is installed.
(9) Type or types and number of sprinklers or nozzles installed including the orifice size, temperature rating, orientation, K-Factor, sprinkler identification number (SIN) for sprinkler heads when applicable, and response type.
(10) The minimum discharge flow rate and pressure required from the hydraulically most demanding sprinkler.
(11) The required pressure settings for pressure reducing valves.
(12) For deluge sprinkler systems, the required flow and pressure at the hydraulically most demanding sprinkler or nozzle.
(13) The protection area per sprinkler based on the hydraulic calculations
(14) The edition of NFPA 13 to which the system was designed and installed.

Revise Section 25.6.1 as follows:

25.6.1 The installing contractor shall provide a general information sign used to determine system design basis and information relevant to the inspection, testing, and maintenance requirements required by ~~*California Edition*~~ NFPA 25, *Standard for the Inspection, Testing, and Maintenance of Water-Based Fire Protection Systems, 2013 California Edition*.

13D—~~13~~*16* Standard for the Installation of Sprinkler Systems in One-and Two-Family Dwellings and Manufactured Homes *as amended**.....R313.1.1, R313.2.1, R313.3.1, R313.3.2, R313.3.2.3.1, R313.3.2.4.2, R313.3.6

****NFPA 13D, Amended Sections as follows:***

Revise Section 6.2.2~~, 6.2.2.1, 6.2.4~~ to read as follows:

6.2.2 Where a *well,* pump, tank *or combination thereof* is the source of supply for a fire sprinkler system, *the water supply shall serve both domestic and fire sprinkler systems, and* the following shall be met:
(1) A test connection shall be provided downstream of the pump that creates a flow of water equal to the smallest sprinkler on the system. The connection shall return water to the tank.
(2) Any disconnecting means for the pump shall be approved.
(3) A method for refilling the tank shall be piped to the tank.
(4) A method of seeing the water level in the tank shall be provided without having to open the tank.
(5) The pump shall not be permitted to sit directly on the floor.

Add new Section 6.2.2.1 as follows:

6.2.2.1 *Where a fire sprinkler system is supplied by a stored water source with an automatically operated means of pressurizing the system other than an electric pump, the water supply may serve the sprinkler system only.*

Add new Section 6.2.4 as follows:

6.2.4 *Where a water supply serves both domestic and fire sprinkler systems, 5 gpm (19 L/min) shall be added to the sprinkler system demand at the point where the systems are connected, to determine the size of common piping and the size of the total water supply requirements where no provision is made to prevent flow into the domestic water system upon operation of a sprinkler.*

Revise Section 8.3.4 to read as follows:

8.3.4* Sprinklers shall not be required in *detached* garages, open attached porches, carports *with no habitable space above*, and similar structures.

Add *new* Section ~~8.4~~*8.4.1~~8~~8.3.10 and 8.3.10.1* as follows:

8.3.10 Solar photovoltaic panel structures

~~*8.4.1*~~*8.3.10.1* *Sprinklers shall be permitted to be omitted ~~for~~ from the following structures:*
(1) Solar photovoltaic panel structures with no use underneath. Signs may be provided, as determined by the enforcing agency prohibiting any use underneath including storage.

(2) Solar photovoltaic (PV) panels supported by framing that have sufficient uniformly distributed and unobstructed openings throughout the top of the array (horizontal plane) to allow heat and gases to escape, as determined by the enforcing agency.

13R—~~13~~*16* Installation of Sprinkler Systems in Residential Occupancies up to and Including Four Stories in Height *as amended*.....903.3.1.2, 903.3.5.1.1, 903.3.5.1.2, 903.4

****NFPA 13R, Amended Sections as follows:***

Revise Section 2.2 and add publications as follows:

2.2 NFPA Publications.

NFPA 25, *Standard for the Inspection, Testing, and Maintenance of Water-Based Fire Protection Systems, 2013 California* edition.

Add new Sections ~~6.6.9~~6.6.10 and 6.10.1 as follows:

6.6.10 Solar photovoltaic panel structures

~~6.6.9~~6.6.10.1 Sprinklers shall be permitted to be omitted ~~for~~ from the following structures:
(1) Solar photovoltaic panel structures with no use underneath. Signs may be provided, as determined by the enforcing agency prohibiting any use underneath including storage.

(2) Solar photovoltaic (PV) panels supported by framing that have sufficient uniformly distributed and unobstructed openings throughout the top of the array (horizontal plane) to allow heat and gases to escape, as determined by the enforcing agency.

Revise Section 11.4 as follows:
11.4 Instructions.
The installing contractor shall provide the property owner or the property owner's authorized representative with the following:
(1) All literature and instructions provided by the manufacturer describing proper operation and maintenance of any equipment and devices installed
(2) NFPA 25, Standard for the Inspection, Testing, and Maintenance of Water-Based Fire Protection Systems 2013 California Edition and Title 19, California Code of Regulations, Chapter 5.
(3) Once the system is accepted by the authority having jurisdiction a label as prescribed by Title 19, California Code of Regulations, Chapter 5, shall be affixed to each system riser.

14—13~~13~~ Installation of Standpipe and Hose System, *as amended**.....905.2, 905.3.4, 905.4.2, 905.8

****NFPA 14, Amended Sections as follows:***

Replace Section 6.3.7.1

***6.3.7.1** System water supply valves, isolation control valves, and other valves in fire mains shall be supervised in an approved manner in the open position by one of the following methods:*
(1) Where a building has a fire alarm system or a sprinkler monitoring system installed, the valve shall be supervised by:
(a) a central station, proprietary, or remote supervising station, or
(b) a local signaling service that initiates an audible signal at a constantly attended location.
(2) Where a building does not have a fire alarm system or a sprinkler monitoring system installed, the valve shall be supervised by:
(a) Locking the valves in the open position, or
(b) Sealing of valves and a approved weekly recorded inspection where valves are located within fenced enclosures under the control of the owner.

20—13~~16~~ Installation of Stationary Pumps for Fire.....913.1, 913.2.1, 913.5, 913.6
22—13 ~~13~~ *Water Tanks for Private Fire Protection*
24—13~~16~~ *Installation of Private Fire Service Mains and Their Appurtenances, as amended** .....

****NFPA 24, Amended Sections as follows:***

Amend Section 4.2.1 as follows:
Section 4.2.1. Installation work shall be done by fully experienced and responsible *contractors. Contractors shall be appropriately licensed in the State of California to install private fire service mains and their appurtenances.*

Revise Section 4.2.2 as follows:
4.2.2 *Installation or modification of private fire service mains shall not begin until plans are approved and appropriate permits secured from* the authority having jurisdiction.

Add Section 4.2.2.1 as follows:
4.2.2.1 *As approved by the authority having jurisdiction, emergency repair of existing system may start immediately, with plans being submitted to the authority having jurisdiction within 96 hours from the start of the repair work.*

~~***Revise Section 5.9.1.2 as follows:***~~
~~**Section 5.9.1.2** Fire department connections shall be properly supported and protected from mechanical damage.~~

Revise Section 5.9.5.1 as follows:
5.9.5.1 Fire department connections shall be on the street side of buildings and *as approved by the authority having jurisdiction.*

~~**Revise Section 6.5.1 as follows:**~~
~~**6.5.1** *Private fire service main systems shall have sectional controlling valves at appropriate points in order to permit sectionalizing the system in the event of a break or for the making of repairs or extensions.*~~

Add Section ~~6.5.2.1 – 6.5.2.3~~6.5.2.4~~6.6.1.1, 6.6.1.2, 6.6.1.4, as follows:
~~**6.5.2.1**~~***6.6.1.1*** *Sectional control valves are not required when the fire service main system serves less than six fire appurtenances.*

~~**6.5.2.2**~~***6.6.1.2*** *Sectional control valves shall be indicating valves in accordance with NFPA 13 Section 6.7.1.3.*

~~**6.5.2.3**~~***6.6.1.3*** *Sectional control valves shall be located so that no more than five fire appurtenances are affected by shut-down of any single portion of the fire service main. Each fire hydrant, fire sprinkler system riser, and standpipe riser shall be considered a separate fire appurtenance. In-rack sprinkler systems shall not be considered as a separate appurtenance.*

~~**6.5.2.4**~~***6.6.1.4*** *The number of fire appurtenances between sectional control valves is allowed to be modified by the authority having jurisdiction.*

~~Revise Section 6.6.2 as follows:~~
~~**6.6.2** A sectional valve shall be provided at the following locations:~~
~~(1) On each bank where a main crosses a body of water~~
~~(2) Outside the building foundation(s) where a main or a section of a main runs under a building~~

Revise Section ~~10.6.5~~10.4.3.1.1 as follows:
~~**10.6.5**~~***10.4.3.1.1*** Pipe joints shall not be located under foundation footings. *The pipe under the building or building foundation shall not contain mechanical joints.*

Exceptions:
1. Where allowed in accordance with ~~10.6.2~~10.4.3.2
2. Alternate designs may be utilized where designed by a registered professional engineer and approved by the enforcing agency.

Revise Section 10.9.1 as follows:
10.9.1 *Backfill shall be well tamped in layers or puddle under and around pipes to prevent settlement or lateral movement.* Backfill shall consist of clean fill sand or pea gravel to a minimum 6" below and to a minimum of 12" above the pipe *and shall contain no ashes, cinders, refuse, organic matter, or other corrosive materials. Other backfill materials and methods are permitted where designed by a registered professional engineer and approved by the enforcing agency.*

25—*13* CA — *California NFPA 25 Edition (Based on the 2013Edition)*
Inspection; Testing and Maintenance of Water-based Fire Protection Systems . . . . . .507.5.3, Table 901.6.1,
904.7.1, 912.6, 913.5, I101.1

31—11 ~~*11*~~ — Installation of Oil-burning Equipment
32—11 — Dry Cleaning Plants. *as amended** 2101.1.1, 2107.1, 2107.3

****NFPA 32, Amended Sections as follows:***

Delete the following publications from Section 2.2:

2.2 NFPA Publications.
NFPA 10, *Standard for Portable Fire Extinguishers*, 2010 edition.

NFPA 25, *Standard for the Inspection, Testing, and Maintenance of Water-Based Fire Protection Systems*, 2011 edition.
NFPA 70, *National Electrical Code®*, 2011 edition.
NFPA *101®, Life Safety Code®*, 2009 edition.
NFPA 5000®, Building Construction and Safety Code®, 2009 edition.

Revise 4.4.1.1 to read as follows:

4.4.1.1 General building and structure design and construction shall be in accordance with *California Building Code.*

Delete language to section 4.4.1.2 and 4.4.1.3 and reserve section numbers.

4.4.1.2 Reserved

4.4.1.3 Reserved

Revise 4.4.4 to read as follows:

4.4.4 Means of Egress. Means of egress shall conform with the provisions of *the California Building Code.*

Revise 4.6.2 to read as follows:

4.6.2 Automatic Sprinkler Systems. Where required by this standard, automatic sprinkler systems shall be installed in accordance with NFPA 13, *Standard for the Installation of Sprinkler Systems*, and periodically inspected, tested, and maintained in accordance with *California Code of Regulations, Title 19, Division 1, Chapter 5.*

Revise 4.6.4 to read as follows:

4.6.4 Portable Fire Extinguishers. Suitable numbers and types of portable fire extinguishers shall be installed and maintained throughout the drycleaning plant in accordance *California Code of Regulations, Title 19, Division 1, Chapter 3.*

Revise 7.3.2 to read as follows:

7.3.2 Electrical Installations. Electrical equipment and wiring in a Type II drycleaning room shall comply with the provisions of *California Electrical Code*, for use in Class I, Division 2 hazardous locations.

37—~~10~~15	*Installation and Use of Stationary Combustion Engines and Gas Turbines*
52—13 *~~13~~*	Vehicular Gaseous Fuel System Code
~~54—12~~15	*National Fuel Gas Code*
61—13 *~~13~~*	Prevention of Fires and Dust Explosions in Agricultural and Food Product
72—~~13~~16	National Fire Alarm *and Signaling* Code, *as amended**.....901.6, 903.4.1, 904.3.5, 907.2, 907.2.5, 907.2.11, 907.2.13.2, 907.3, 907.3.3, 907.3.4, 907.5.2.1.2, 907.5.2.2, 907.6, 907.6.1, 907.6.5, 907.7, 907.7.1, 907.7.2, 911.1.5, 3006.5, 3007.6

****NFPA 72, Amended Sections as follows:***

Revise Section 10.3.1 as follows:
10.3.1 Equipment constructed and installed in conformity with this Code shall be listed for the purpose for which it is used. *Fire alarm Systems and components shall be California State Fire Marshal approved and listed in accordance with California Code of Regulations, Title 19, Division 1.*

Revise Section 10.3.3 as follows:
10.3.3 All devices and appliances that receive their power from the initiating device circuit or signaling line circuit of a control unit shall be *California State Fire Marshal* listed for use with the control unit.

Revise Section 10.7.1 as follows:
10.7.1 *Where approved by the authority having jurisdiction*, ECS priority signals when evaluated by stakeholders

through risk analysis in accordance with 24.3.11 shall be permitted to take precedence over all other signals.

Revise Section 12.3.8.1 as follows:
12.3.8.1 The outgoing and return (redundant) circuit conductors shall be permitted in the same cable assembly (i.e., multiconductor cable), enclosure, or raceway only under the following conditions:
(1) For a distance not to exceed 10 ft (3.0 m) where the outgoing and return conductors enter or exit the initiating device, notification appliance, or control unit enclosures
(2) Single drops installed in the raceway to individual devices or appliances
(3)*In a single room not exceeding 1000 ft2 (93 m2) in area, a drop installed in the raceway to multiple devices or appliances that does not include any emergency control function devices
~~12.3.7~~ (4) Where the vertically run conductors are contained in a 2-hour rated cable assembly, or enclosed (installed) in a 2-hour rated enclosure or a listed circuit integrity (C.I.) cable, which meets or exceeds a 2-hour fire resistive rating.

Revise Section 14.4.6.1 as follows:
14.4.6.1 Testing. Household fire alarm systems shall be tested in *accordance with the manufacturer's published instructions* according to the methods of Table 14.4.3.2.

Revise Section 17.15 as follows:
17.15 Fire Extinguisher Electronic Monitoring Device. A fire extinguisher electronic monitoring device shall indicate those conditions for a specific fire extinguisher required by *California Code of Regulations, Title 19, Division 1, Chapter 1, Section 574.2 (c) and California Fire Code to a fire alarm control unit.*

Revise Section 21.3.6 as follows:
21.3.6 Smoke detectors shall not be installed in unsprinklered elevator hoistways unless they are installed to activate the elevator hoistway smoke relief equipment *or where required by Chapter 30 of the California Building Code.*

Revise Section 23.8.5.1.2 as follows:
23.8.5.1.2 - Where connected to a supervising station, fire alarm systems employing automatic fire detectors or waterflow detection devices shall include a manual fire alarm box to initiate a signal to the supervising station.

Exception: Fire alarm systems dedicated to elevator recall control, supervisory service *and fire sprinkler monitoring as permitted in section 21.3 of NFPA 72.*

Revise Section 23.8.5.4.1 as follows:
23.8.5.4.1 Systems equipped with alarm verification features shall be permitted under the following conditions:
(1) The alarm verification feature is not initially enabled unless conditions or occupant activities that are expected to cause nuisance alarms are anticipated in the area that is protected by the smoke detectors. Enabling of the alarm verification feature shall be protected by password or limited access.
(2) A smoke detector that is continuously subjected to a smoke concentration above alarm threshold does not delay the system functions of Sections 10.7 through 10.16, 23.8.1.1, or 21.2.1 by more than . *30 seconds.*
(3) Actuation of an alarm-initiating device other than a smoke detector causes the system functions of sections 10.7 through 10.16, 23.8.1.1, or 21.2.1 without additional delay.
(4) The current status of the alarm verification feature is shown on the record of completion *(see Figure 7.8.2(a), item 4.3).*
(5) Operation of a patient room smoke detector in I-2 and R-2.1 Occupancies shall not include an alarm verification feature.

Revise Section 29.3.1 as follows:
29.3.1 All devices, combinations of devices, and equipment to be installed in conformity with this chapter shall be approved ~~or~~*and* listed *by the California State Fire Marshal* the for the purposes for which they are intended.

Revise Section 29.5.2.1.1 as follows:
29.5.2.1.1* Smoke and Heat Alarms. Unless exempted by applicable laws, codes, or standards, smoke or heat alarms used to provide a fire-warning function, and when two or more alarms are installed within a dwelling unit, suite of rooms, or similar area, shall be arranged so that the operation of any smoke or heat alarm causes all alarms within these locations to sound.

Exception to 29.5.2.1.1 not adopted by the SFM

Add Section 29.7.2.1 as follows:
29.7.2.1 *The alarm verification feature shall not be used for household fire warning equipment.*

Add Section 29.7.6.7.1 as follows:
29.7.6.7.1 *The alarm verification feature shall not be used for household fire warning equipment.*

Revise Section 23.8.5.4 as follows:
29.8.3.4 Specific location requirements. *The installation of smoke alarms and smoke detectors shall comply with the following requirements:*
(1) Smoke alarms and smoke detectors shall not be located where ambient conditions, including humidity and temperature, are outside the limits specified by the manufacturer's published instructions.
(2) Smoke alarms and smoke detectors shall not be located within unfinished attics or garages or in other spaces where temperatures can fall below 40°F (4°C) or exceed 100°F (38°C).
(3) Where the mounting surface could become considerably warmer or cooler than the room, such as a poorly insulated ceiling below an unfinished attic or an exterior wall, smoke alarms and smoke detectors shall be mounted on an inside wall.
(4) Smoke alarms or smoke detectors shall be installed a minimum of 20 feet horizontal distance from a permanently installed cooking appliance.

Exceptions: *Ionization smoke alarms with an alarm silencing switch or photoelectric smoke alarms shall be permitted to be installed 10 feet (3 m) or greater from a permanently installed cooking appliance.*
Photoelectric smoke alarms shall be permitted to be installed greater than 6 feet (1.8 m) from a permanently installed cooking appliance where the kitchen or cooking area and adjacent spaces have no clear interior partitions and the 10 ft distances would prohibit the placement of a smoke alarm or smoke detector required by other sections of the code.
Smoke alarms listed for use in close proximity to a permanently installed cooking appliance.
(5) Effective January 1, 2016, smoke alarms and smoke detectors used in household fire alarm systems installed between 6 ft (1.8 m) and 20 ft (6.1 m) along a horizontal flow path from a stationary or fixed cooking appliance shall be listed for resistance to common nuisance sources from cooking.
(6) Installation near bathrooms. Smoke alarms shall be installed not less than a 3-foot (0.91 m) horizontal distance from the door or opening of a bathroom that contains a bathtub or shower unless this would prevent placement of a smoke alarm required by other sections of the code.
(7) Smoke alarms and smoke detectors shall not be installed within a 36 in. (910 mm) horizontal path from the supply registers of a forced air heating or cooling system and shall be installed outside of the direct airflow from those registers.
(8) Smoke alarms and smoke detectors shall not be installed within a 36 in. (910 mm) horizontal path from the tip of the blade of a ceiling-suspended (paddle) fan.
(9) Where stairs lead to other occupied levels, a smoke alarm or smoke detector shall be located so that smoke rising in the stairway cannot be prevented from reaching the smoke alarm or smoke detector by an intervening door or obstruction.
(10) For stairways leading up from a basement, smoke alarms or smoke detectors shall be located on the basement ceiling near the entry to the stairs.
(11) For tray-shaped ceilings (coffered ceilings), smoke alarms and smoke detectors shall be installed on the highest portion of the ceiling or on the sloped portion of the ceiling within 12 in. (300 mm) vertically down from the highest point.
(12) Smoke alarms and detectors installed in rooms with joists or beams shall comply with the requirements of 17.7.3.2.4 of NFPA 72.
(13) Heat alarms and detectors installed in rooms with joists or beams shall comply with the requirements of 17.6.3 of NFPA 72.

80—~~13~~*16* Fire Doors and Other Opening Protectives

[Editors Note: Repeal CA amendment adopting NFPA 92. The model code now adopts it.]
92—15 Standard for Smoke Control Systems
~~92—12~~ ~~Standard for Smoke Control Systems~~

99—15~~12~~ Health Care Facilities Code
101-15~~12~~ Life Safety Code 1028.6.2
105—~~13~~*16*. Installation of Smoke Door Assemblies and Other Opening Protectives
110—~~13~~*16* Emergency and Standby Power Systems
111—~~13~~*16* Stored Electrical Energy Emergency and Standby Power Systems

120—15	Fire Prevention and Control in Coal Mines ~~Fire Prevention and Control in Coal Mines~~
211—13~~13~~	Chimneys, Fireplaces, Vents and Solid Fuel-burning Appliances
259—13 ~~13~~	Test Method for Potential Heat of Building Materials
275—13 ~~13~~	Standard Method of Fire Tests for the Evaluation of Thermal Barriers Used Over Foam Plastic Insulation
285—12~~12~~	Standard Method of Test for the Evaluation of Flammability Characteristics of Exterior Nonload-Bearing Wall Assemblies Containing Combustible Components
288—12	Standard Method of Fire Tests of Horizontal~~Horizontal~~ Fire Door Assemblies Installed in Horizontal~~Horizontal~~ Fire-resistance-rated Assemblies~~Assemblies~~
289—13 ~~13~~	Standard Method of Fire Test for Individual Fuel Packages
409—~~11~~16	Aircraft Hangars
502 – 14	*Standard for Road Tunnels, Bridges, and Other Limited Access Highways*
654—13 ~~13~~	Prevention of Fire and Dust Explosions from the Manufacturing, Processing and Handling of Combustible Particulate Solids
720—15 ~~12~~	Standard for the Installation of Carbon Monoxide (CO) Detection and Warning Equipment
1124—~~06~~ *13*	Manufacture, Transportation, Storage and Retail Sales of Fireworks and Pyrotechnic Articles
2001 — 15~~12~~	Clean Agent Fire Extinguishing Systems *as amended**.....Table 901.6.1, 904.10

NFPA 2001, Amended Sections as follows:

Add Section 4.3.5.1.1 and 4.3.5.2.1 to read as follows:

4.3.5.1.1 *Alarms signals from the fire extinguishing system shall not interfere with the building fire alarm signal.*

4.3.5.2.1. *The lens on visual appliances shall be "red" in color.*
Exception: Other lens colors are permitted where approved by the enforcing agency.

SFM

State of California
Department of Forestry and Fire Protection
Office of the State Fire Marshal
P.O. Box 944246
Sacramento, CA 94246-2460

Standard reference number	Title	Referenced in code section number
SFM 12-3	*Releasing Systems for Security Bars in Dwellings*	
SFM 12-7-3	*Fire-testing Furnaces*	
SFM 12-7A-1	*Exterior Wall Siding and Sheathing*	
SFM 12-7A-2	*Exterior Window*	
SFM 12-7A-3	*Under Eave*	
SFM 12-7A-4	*Decking*	
SFM 12-7A-4A	*Decking Alternate Method A*	
SFM 12-7A-5	*Ignition Resistant Building Material*	
SFM 12-8-100	*Room Fire Tests for Wall and Ceiling Materials*	
SFM 12-10-1	*Power Operated Exit Doors*	
SFM 12-10-2	*Single Point Latching or Locking Devices*	
SFM 12-10-3	*Emergency Exit and Panic Hardware*	

(The Office of the State Fire Marshal standards referred to above are found in the California Code of Regulations, Title 24, Part 12.)

UBC — International Code Council, Inc.
500 New Jersey Avenue, NW 6th Floor
Washington, DC 20001

Standard reference number	Title	Referenced in code section number
UBC Standard 15-2	*Test Standard for determining the Fire Retardancy of Roof-covering Materials*	*1505.6*
UBC Standard 15-3	*Wood Shakes*	*1505.6*
UBC Standard 15-4	*Wood Shingles*	*1505.6*

UL — Underwriters Laboratories, Inc.
333 Pfingsten Road
Northbrook, IL 60062-2096

Standard Reference number	Title	Referenced in code section number
13-96	*Power-limited Circuit Cables*	
38-99	*Manually Actuated Signaling Boxes—with Revisions through February 2, 2005 as amended.**	
	Amend Section 14.1.5 as follows:* ***14.1.5 A signaling box having a glass panel, disc, rod or similar part that must be broken to operate it for a signal or for access to its actuating means shall satisfactorily complete five part-breaking operations using the means provided with the box, without jamming of the mechanism or other interference by broken particles. It shall be practicable to remove and replace the broken parts. A signaling box shall not have a glass panel, disc, rod or similar part requiring a striking action by grasping a tool to operate it for a signal. The force required to activate controls shall be no greater than 5 pounds (22 N) of force.* ***Add Appendix B chapter to UL 38 (1999) as follows:*** ***Appendix B,*** ***14.1.5 Operation.** Controls and operating mechanisms shall be operable with one hand and shall not require tight grasping, pinching or twisting of the wrist.*	
193-04	*Alarm Valves for Fire-Protection Service*	
199-95	*Automatic Sprinklers for Fire Protection Service—with Revisions through August 19, 2005*	
217-06	Single and Multiple Station Smoke Alarms	907.2.11
228-97	*Door Closers/Holders, with or without Integral Smoke Detectors—with Revisions through January 26, 2006*	
260-04	*Dry Pipe and Deluge Valves for Fire Protection Service*	
262-04	*Gate Valves for Fire Protection Service*	
268A-98	*Smoke Detectors for Duct Application—with Revisions through October 22, 2003*	
312-04	*Check Valves for Fire-Protection Service*	
346-05	*Waterflow Indicators for Fire Protective Signaling Systems*	
464-03	*Audible Signal Appliances—with Revisions through October 10, 2003*	
497B-04	*Protectors for Data Communication and Fire Alarm Circuits*	
521-99	*Heat Detectors for Fire Protective Signaling Systems—with Revisions through July 20, 2005*	
539-00	*Single- and Multiple-Station Heat Detectors—with Revisions through August 15, 2005*	
632-00	*Electrically Actuated Transmitters*	
753-04	*Alarm Accessories for Automatic Water Supply Valves for Fire Protection Service*	
813-96	*Commercial Audio Equipment—with Revisions through December 7, 1999*	

864-03 *Control Units for Fire Protective Signaling Systems, as amended*—with Revisions through February 2010 . . . . . 909.12*

Amend No. 55.1 as follows:

***RETARD-RESET-RESTART PERIOD – MAXIMUM 30 SECONDS** —No alarm obtained from control unit. Maximum permissible time is 30 seconds.*

Amend Section 55.2.2 as follows:

Where an alarm verification feature is provided, the maximum retard-reset-restart period before an alarm signal can be confirmed

and indicated at the control unit, including any control unit reset time and the power-up time for the detector to become operational

for alarm, shall not exceed 30 seconds. (The balance of the section text is to remain unchanged).

***Add Section 55.2.9 as follows:**

Smoke detectors connected to an alarm verification feature shall not be used as releasing devices.

***Exception:** Smoke detectors which operate their releasing function immediately upon alarm actuation independent of alarm verification feature.*

Amend Section 89.1.10 as follows:

The existing text of this section is to remain as printed with one editorial amendment as follows:

THE TOTAL DELAY (CONTROL UNIT PLUS SMOKE DETECTORS) SHALL NOT EXCEED 30 SECONDS.

(The balance of the section text is to remain unchanged).

Notation:

Authority: Health and Safety Code Sections 1250, 1569.72, 1569.78, 1568.02, 1502, 1597.44, 1597.45, 1597.46, 1597.54, 1597.65, 13108, 13108.5, 13114, 13143, 13143.2, 13143.6, 13146, 17921, 18949.2, Government Code Section 51189

References: Health and Safety Code Sections 13143, 18949.2, Government Code Sections 51176, 51177, 51178, 51179, Public Resources Code Sections 4201 through 4204

2015 IBC®

INTERNATIONAL
Building Code®

CODE ALERT!

Sign up now to receive critical code updates and free access to videos, book excerpts and training resources.

Signup is easy, subscribe now! www.iccsafe.org/alerts

1559

INTERNATIONAL CODE COUNCIL®

2015 International Building Code®

First Printing: May 2014

ISBN: 978-1-60983-468-5 (soft-cover edition)
ISBN: 978-1-60983-497-8 (loose-leaf edition)

COPYRIGHT © 2014
by
INTERNATIONAL CODE COUNCIL, INC.

Date of First Publication: May 30, 2014

ALL RIGHTS RESERVED. This 2015 *International Building Code*® is a copyrighted work owned by the International Code Council, Inc. Without advance written permission from the copyright owner, no part of this book may be reproduced, distributed or transmitted in any form or by any means, including, without limitation, electronic, optical or mechanical means (by way of example, and not limitation, photocopying, or recording by or in an information storage retrieval system). For information on permission to copy material exceeding fair use, please contact: Publications, 4051 West Flossmoor Road, Country Club Hills, IL 60478. Phone 1-888-ICC-SAFE (422-7233).

Trademarks: "International Code Council," the "International Code Council" logo and the "International Building Code" are trademarks of the International Code Council, Inc.

PRINTED IN THE U.S.A.

1560

PREFACE

Introduction

Internationally, code officials recognize the need for a modern, up-to-date building code addressing the design and installation of building systems through requirements emphasizing performance. The *International Building Code*®, in this 2015 edition, is designed to meet these needs through model code regulations that safeguard the public health and safety in all communities, large and small.

This comprehensive building code establishes minimum regulations for building systems using prescriptive and performance-related provisions. It is founded on broad-based principles that make possible the use of new materials and new building designs. This 2015 edition is fully compatible with all of the *International Codes*® (I-Codes®) published by the International Code Council (ICC)®, including the *International Energy Conservation Code*®, *International Existing Building Code*®, *International Fire Code*®, *International Fuel Gas Code*®, *International Green Construction Code*®, *International Mechanical Code*®, ICC *Performance Code*®, *International Plumbing Code*®, *International Private Sewage Disposal Code*®, *International Property Maintenance Code*®, *International Residential Code*®, *International Swimming Pool and Spa Code*™, *International Wildland-Urban Interface Code*® and *International Zoning Code*®.

The *International Building Code* provisions provide many benefits, among which is the model code development process that offers an international forum for building professionals to discuss performance and prescriptive code requirements. This forum provides an excellent arena to debate proposed revisions. This model code also encourages international consistency in the application of provisions.

Development

The first edition of the *International Building Code* (2000) was the culmination of an effort initiated in 1997 by the ICC. This included five drafting subcommittees appointed by ICC and consisting of representatives of the three statutory members of the International Code Council at that time, including: Building Officials and Code Administrators International, Inc. (BOCA), International Conference of Building Officials (ICBO) and Southern Building Code Congress International (SBCCI). The intent was to draft a comprehensive set of regulations for building systems consistent with and inclusive of the scope of the existing model codes. Technical content of the latest model codes promulgated by BOCA, ICBO and SBCCI was utilized as the basis for the development, followed by public hearings in 1997, 1998 and 1999 to consider proposed changes. This 2015 edition presents the code as originally issued, with changes reflected in the 2003, 2006, 2009 and 2012 editions and further changes approved by the ICC Code Development Process through 2014. A new edition such as this is promulgated every 3 years.

This code is founded on principles intended to establish provisions consistent with the scope of a building code that adequately protects public health, safety and welfare; provisions that do not unnecessarily increase construction costs; provisions that do not restrict the use of new materials, products or methods of construction; and provisions that do not give preferential treatment to particular types or classes of materials, products or methods of construction.

Adoption

The International Code Council maintains a copyright in all of its codes and standards. Maintaining copyright allows the ICC to fund its mission through sales of books, in both print and electronic formats. The *International Building Code* is designed for adoption and use by jurisdictions that recognize and acknowledge the ICC's copyright in the code, and further acknowledge the substantial shared value of the public/private partnership for code development between jurisdictions and the ICC.

The ICC also recognizes the need for jurisdictions to make laws available to the public. All ICC codes and ICC standards, along with the laws of many jurisdictions, are available for free

in a nondownloadable form on the ICC's website. Jurisdictions should contact the ICC at adoptions@iccsafe.org to learn how to adopt and distribute laws based on the *International Building Code* in a manner that provides necessary access, while maintaining the ICC's copyright.

Maintenance

The *International Building Code* is kept up to date through the review of proposed changes submitted by code enforcing officials, industry representatives, design professionals and other interested parties. Proposed changes are carefully considered through an open code development process in which all interested and affected parties may participate.

The contents of this work are subject to change through both the code development cycles and the governmental body that enacts the code into law. For more information regarding the code development process, contact the Codes and Standards Development Department of the International Code Council.

While the development procedure of the *International Building Code* ensures the highest degree of care, the ICC, its members and those participating in the development of this code do not accept any liability resulting from compliance or noncompliance with the provisions because the ICC does not have the power or authority to police or enforce compliance with the contents of this code. Only the governmental body that enacts the code into law has such authority.

Code Development Committee Responsibilities (Letter Designations in Front of Section Numbers)

In each code development cycle, code change proposals to this code are considered at the Code Development Hearings by 11 different code development committees. Four of these committees have primary responsibility for designated chapters and appendices as follows:

IBC – Fire Safety
Code Development Committee [BF]: Chapters 7, 8, 9, 14, 26

IBC – General
Code Development Committee [BG]: Chapters 2, 3, 4, 5, 6, 12, 27, 28, 29, 30, 31, 32, 33, Appendices A, B, C, D, K

IBC – Means of Egress
Code Development Committee [BE]: Chapters 10, 11, Appendix E

IBC – Structural
Code Development Committee [BS]: Chapters 15, 16, 17, 18, 19, 20, 21, 22, 23, 24, 25, Appendices F, G, H, I, J, L, M

Code change proposals to sections of the code that are preceded by a bracketed letter designation, such as [A], will be considered by a committee other than the building code committee listed for the chapter or appendix above. For example, proposed code changes to Section [F] 307.1.1 will be considered by the International Fire Code Development Committee during the Committee Action Hearing in the 2016 (Group B) code development cycle.

Another example is Section [BF] 1505.2. While code change proposals to Chapter 15 are primarily the responsibility of the IBC – Structural Code Development Committee, which considers code change proposals during the 2016 (Group B) code development cycle, Section 1505.2 is the responsibility of the IBC – Fire Safety Code Development Committee, which considers code change proposals during the 2015 (Group A) code development cycle.

The bracketed letter designations for committees responsible for portions of this code are as follows:

[A] = Administrative Code Development Committee;

[BE] = IBC – Means of Egress Code Development Committee;

[BF] = IBC – Fire Safety Code Development Committee;

[BG] = IBC – General Code Development Committee;

[BS] = IBC – Structural Code Development Committee;

[E] = International Energy Conservation Code Development Committee (Commercial Energy Committee or Residential Energy Committee, as applicable);

[EB] = International Existing Building Code Development Committee;

[F] = International Fire Code Development Committee;

[FG] = International Fuel Gas Code Development Committee;

[M] = International Mechanical Code Development Committee; and

[P] = International Plumbing Code Development Committee.

For the development of the 2018 edition of the I-Codes, there will be three groups of code development committees and they will meet in separate years. Note that these are tentative groupings.

Group A Codes (Heard in 2015, Code Change Proposals Deadline: January 12, 2015)	**Group B Codes (Heard in 2016, Code Change Proposals Deadline: January 11, 2016)**	**Group C Codes (Heard in 2017, Code Change Proposals Deadline: January 11, 2017)**
International Building Code – Fire Safety (Chapters 7, 8, 9, 14, 26) – Means of Egress (Chapters 10, 11, Appendix E) – General (Chapters 2-6, 12, 27-33, Appendices A, B, C, D, K)	Administrative Provisions (Chapter 1 of all codes except IRC and IECC, administrative updates to currently referenced standards, and designated definitions)	International Green Construction Code
International Fuel Gas Code	**International Building Code** – Structural (Chapters 15-25, Appendices F, G, H, I, J, L, M)	
International Existing Building Code	International Energy Conservation Code	
International Mechanical Code	International Fire Code	
International Plumbing Code	International Residential Code – IRC - Building (Chapters 1-10, Appendices E, F, H, J, K, L, M, O, R, S, T, U)	
International Private Sewage Disposal Code	International Wildland-Urban Interface Code	
International Property Maintenance Code		
International Residential Code – IRC - Mechanical (Chapters 12-24) – IRC - Plumbing (Chapters 25-33, Appendices G, I, N, P)		
International Swimming Pool and Spa Code		
International Zoning Code		

Note: Proposed changes to the ICC Performance Code will be heard by the code development committee noted in brackets [ ] in the text of the code.

Code change proposals submitted for code sections that have a letter designation in front of them will be heard by the respective committee responsible for such code sections. Because different committees hold code development hearings in different years, proposals for this code will be heard by committees in both the 2015 (Group A) and the 2016 (Group B) code development cycles.

For instance, every section of Chapter 16 is the responsibility of the IBC – Structural Committee, and, as noted in the preceding table, that committee will hold its committee action hearings in 2016 to consider code change proposals for the chapters for which it is responsible. Therefore any proposals received for Chapter 16 of this code will be assigned to the IBC – Structural Committee, which will consider code change proposals in 2016, during the Group B code change cycle.

As another example, every section of Chapter 1 of this code is designated as the responsibility of the Administrative Code Development Committee, and that committee is part of the Group B portion of the hearings. This committee will hold its committee action hearings in 2016 to consider all code change proposals for Chapter 1 of this code and proposals for Chapter 1 of all I-Codes except the *International Energy Conservation Code, International Residential Code* and ICC *Performance Code*. Therefore, any proposals received for Chapter 1 of this code will be assigned to the Administrative Code Development Committee for consideration in 2016.

It is very important that anyone submitting code change proposals understand which code development committee is responsible for the section of the code that is the subject of the code change proposal. For further information on the code development committee responsibilities, please visit the ICC website at www.iccsafe.org/scoping.

Marginal Markings

Solid vertical lines in the margins within the body of the code indicate a technical change from the requirements of the 2012 edition. Deletion indicators in the form of an arrow (➡) are provided in the margin where an entire section, paragraph, exception or table has been deleted or an item in a list of items or a table has been deleted.

A single asterisk [*] placed in the margin indicates that text or a table has been relocated within the code. A double asterisk [**] placed in the margin indicates that the text or table immediately following it has been relocated there from elsewhere in the code. The following table indicates such relocations in the 2015 edition of the *International Building Code*.

2015 LOCATION	2012 LOCATION
712.1.13.2	711.3.2
903.3.8 through 903.3.8.5	903.3.5.1.1
915	908.7
1006	1014.3, 1015, 1021
1007	1015.2, 1021.3
1019.3	1009.3
1504.2	1711.2
2111.2	2101.3.1
Table 2308.5.11	Table 2304.6
2514	1911
2902.3.6	1210.4
3002.9	3004.4
3006	713.14.1 and 713.14.1.1

Coordination between the International Building and Fire Codes

Because the coordination of technical provisions is one of the benefits of adopting the ICC family of model codes, users will find the ICC codes to be a very flexible set of model documents. To accomplish this flexibility some technical provisions are duplicated in some of the model code documents. While the *International Codes* are provided as a comprehensive set of model codes for the built environment, documents are occasionally adopted as a stand-alone regulation. When one of the model documents is adopted as the basis of a stand-alone code, that code should provide a complete package of requirements with enforcement assigned to the entity for which the adoption is being made.

The model codes can also be adopted as a family of complementary codes. When adopted together there should be no conflict of any of the technical provisions. When multiple model codes are adopted in a jurisdiction, it is important for the adopting authority to evaluate the provisions in each code document and determine how and by which agency(ies) they will be enforced. It is important, therefore, to understand that where technical provisions are duplicated in multiple model documents, the enforcement duties must be clearly assigned by the local adopting jurisdiction. ICC remains committed to providing state-of-the-art model code documents that, when adopted locally, will reduce the cost to government of code adoption and enforcement and protect the public health, safety and welfare.

Italicized Terms

Selected terms set forth in Chapter 2, Definitions, are italicized where they appear in code text (except those in Sections 1903 through 1905, where italics indicate provisions that differ from ACI 318). Such terms are not italicized where the definition set forth in Chapter 2 does not impart the intended meaning in the use of the term. The terms selected have definitions that the user should read carefully to facilitate better understanding of the code.

EFFECTIVE USE OF THE INTERNATIONAL BUILDING CODE

The *International Building Code*® (IBC®) is a model code that provides minimum requirements to safeguard the public health, safety and general welfare of the occupants of new and existing buildings and structures. The IBC is fully compatible with the ICC family of codes, including: *International Energy Conservation Code*® (IECC®), *International Existing Building Code*® (IEBC®), *International Fire Code*® (IFC®), *International Fuel Gas Code*® (IFGC®), *International Green Construction Code*® (IgCC®), *International Mechanical Code*® (IMC®), ICC *Performance Code*® (ICCPC®), *International Plumbing Code*® (IPC®), *International Private Sewage Disposal Code*® (IPSDC®), *International Property Maintenance Code*® (IPMC®), *International Residential Code*® (IRC®), *International Swimming Pool and Spa Code*™ (ISPSC™), *International Wildland-Urban Interface Code*® (IWUIC®) and *International Zoning Code*® (IZC®).

The IBC addresses structural strength, means of egress, sanitation, adequate lighting and ventilation, accessibility, energy conservation and life safety in regard to new and existing buildings, facilities and systems. The codes are promulgated on a 3-year cycle to allow for new construction methods and technologies to be incorporated into the codes. Alternative materials, designs and methods not specifically addressed in the code can be approved by the code official where the proposed materials, designs or methods comply with the intent of the provisions of the code (see Section 104.11).

The IBC applies to all occupancies, including one- and two-family dwellings and townhouses that are not within the scope of the IRC. The IRC is referenced for coverage of detached one- and two-family dwellings and townhouses as defined in the exception to Section 101.2 and the definition for "Townhouse" in Chapter 2. The IRC can also be used for the construction of Live/Work units (as defined in Section 419) and small bed and breakfast-style hotels where there are five or fewer guest rooms and the hotel is owner occupied. The IBC applies to all types of buildings and structures unless exempted. Work exempted from permits is listed in Section 105.2.

Arrangement and Format of the 2015 IBC

Before applying the requirements of the IBC, it is beneficial to understand its arrangement and format. The IBC, like other codes published by ICC, is arranged and organized to follow sequential steps that generally occur during a plan review or inspection.

Chapters	Subjects
1-2	Administration and definitions
3	Use and occupancy classifications
4, 31	Special requirements for specific occupancies or elements
5-6	Height and area limitations based on type of construction
7-9	Fire resistance and protection requirements
10	Requirements for evacuation
11	Specific requirements to allow use and access to a building for persons with disabilities
12-13, 27-30	Building systems, such as lighting, HVAC, plumbing fixtures, elevators
14-26	Structural components—performance and stability
32	Encroachment outside of property lines
33	Safeguards during construction
35	Referenced standards
Appendices A-M	Appendices

The IBC requirements for hazardous materials, fire-resistance-rated construction, interior finish, fire protection systems, means of egress, emergency and standby power, and temporary structures are directly correlated with the requirements of the IFC. The following chapters/sections of the IBC are correlated to the IFC:

IBC Chapter/Section	IFC Chapter/Section	Subject
Sections 307, 414, 415	Chapters 50-67	Hazardous materials and Group H requirements
Chapter 7	Chapter 7	Fire-resistance-rated construction (Fire and smoke protection features in the IFC)
Chapter 8	Chapter 8	Interior finish, decorative materials and furnishings
Chapter 9	Chapter 9	Fire protection systems
Chapter 10	Chapter 10	Means of egress
Chapter 27	Section 604	Standby and emergency power
Section 3103	Chapter 31	Temporary structures

The IBC requirements for smoke control systems, and smoke and fire dampers are directly correlated to the requirements of the IMC. IBC Chapter 28 is a reference to the IMC and the IFGC for chimneys, fireplaces and barbecues, and all aspects of mechanical systems. The following chapters/sections of the IBC are correlated with the IMC:

IBC Chapter/Section	IMC Chapter/Section	Subject
Section 717	Section 607	Smoke and fire dampers
Section 909	Section 513	Smoke control

The IBC requirements for plumbing fixtures and toilet rooms are directly correlated to the requirements of the IPC. The following chapters/sections of the IBC are correlated with the IPC:

IBC Chapter/Section	IPC Chapter/Section	Subject
Chapter 29	Chapters 3 & 4	Plumbing fixtures and facilities

The following is a chapter-by-chapter synopsis of the scope and intent of the provisions of the *International Building Code.*

Chapter 1 Scope and Administration. Chapter 1 establishes the limits of applicability of the code and describes how the code is to be applied and enforced. Chapter 1 is in two parts, Part 1—Scope and Application (Sections 101-102) and Part 2—Administration and Enforcement (Sections 103-116). Section 101 identifies which buildings and structures come under its purview and references other ICC codes as applicable. Standards and codes are scoped to the extent referenced (see Section 102.4).

The building code is intended to be adopted as a legally enforceable document and it cannot be effective without adequate provisions for its administration and enforcement. The provisions of Chapter 1 establish the authority and duties of the code official appointed by the jurisdiction having authority and also establish the rights and privileges of the design professional, contractor and property owner.

Chapter 2 Definitions. An alphabetical listing of all defined terms is located in Chapter 2. Defined terms that are pertinent to a specific chapter or section are also found in that chapter or section with a reference back to Chapter 2 for the definition. While a defined term may be listed in one chapter or another, the meaning is applicable throughout the code.

Codes are technical documents and every word, term and punctuation mark can impact the meaning of the code text and the intended results. The code often uses terms that have a unique

meaning in the code and the code meaning can differ substantially from the ordinarily understood meaning of the term as used outside of the code. Where understanding of a term's definition is especially key to or necessary for understanding a particular code provision, the term is shown in *italics* wherever it appears in the code.

The user of the code should be familiar with and consult this chapter because the definitions are essential to the correct interpretation of the code. Where a term is not defined, such terms shall have the ordinarily accepted meaning.

Chapter 3 Use and Occupancy Classification. Chapter 3 provides for the classification of buildings, structures and parts thereof based on the purpose or purposes for which they are used. Section 302 identifies the groups into which all buildings, structures and parts thereof must be classified. Sections 303 through 312 identify the occupancy characteristics of each group classification. In some sections, specific group classifications having requirements in common are collectively organized such that one term applies to all. For example, Groups A-1, A-2, A-3, A-4 and A-5 are individual groups for assembly-type buildings. The general term "Group A," however, includes each of these individual groups. Other groups include Business (B), Educational (E), Factory (F-1, F-2), High Hazard (H-1, H-2, H-3, H-4, H-5), Institutional (I-1, I-2, I-3, I-4), Mercantile (M), Residential (R-1, R-2, R-3, R-4), Storage (S-1, S-2) and Utility (U). In some occupancies, the smaller number means a higher hazard, but that is not always the case.

Defining the use of the buildings is very important as it sets the tone for the remaining chapters of the code. Occupancy works with the height, area and construction type requirements in Chapters 5 and 6, as well as the special provisions in Chapter 4, to determine "equivalent risk," or providing a reasonable level of protection or life safety for building occupants. The determination of equivalent risk involves three interdependent considerations: (1) the level of fire hazard associated with the specific occupancy of the facility; (2) the reduction of fire hazard by limiting the floor area and the height of the building based on the fuel load (combustible contents and burnable building components); and (3) the level of overall fire resistance provided by the type of construction used for the building. The greater the potential fire hazards indicated as a function of the group, the lesser the height and area allowances for a particular construction type.

Occupancy classification also plays a key part in organizing and prescribing the appropriate protection measures. As such, threshold requirements for fire protection and means of egress systems are based on occupancy classification (see Chapters 9 and 10). Other sections of the code also contain requirements respective to the classification of building groups. For example, Section 706 specifies requirements for fire wall fire-resistance ratings that are tied to the occupancy classification of a building and Section 803.11 contains interior finish requirements that are dependent upon the occupancy classification. The use of the space, rather than the occupancy of the building, is utilized for determining occupant loading (Section 1004) and live loading (Section 1607).

Over the useful life of a building, the activities in the building will evolve and change. Where the provisions of the code address uses differently, moving from one activity to another or from one level of activity to another is, by definition, a change of occupancy. The new occupancy must be in compliance with the applicable provisions.

Chapter 4 Special Detailed Requirements Based On Use and Occupancy. Chapter 4 contains the requirements for protecting special uses and occupancies, which are supplemental to the remainder of the code. Chapter 4 contains provisions that may alter requirements found elsewhere in the code; however, the general requirements of the code still apply unless modified within the chapter. For example, the height and area limitations established in Chapter 5 apply to all special occupancies unless Chapter 4 contains height and area limitations. In this case, the limitations in Chapter 4 supersede those in other sections. An example of this is the height and area limitations for open parking garages given in Section 406.5.4, which supersede the limitations given in Sections 504 and 506.

In some instances, it may not be necessary to apply the provisions of Chapter 4. For example, if a covered mall building complies with the provisions of the code for Group M, Section 402 does not apply; however, other sections that address a use, process or operation must be applied to that specific occupancy, such as stages and platforms, special amusement buildings and hazardous materials (Sections 410, 411 and 414).

The chapter includes requirements for buildings and conditions that apply to one or more groups, such as high-rise buildings, underground buildings or atriums. Special uses may also imply specific occupancies and operations, such as for Group H, hazardous materials, application of flam-

mable finishes, drying rooms, organic coatings and combustible storage or hydrogen fuel gas rooms, all of which are coordinated with the IFC. Unique consideration is taken for special use areas, such as covered mall buildings, motor-vehicle-related occupancies, special amusement buildings and aircraft-related occupancies. Special facilities within other occupancies are considered, such as stages and platforms, motion picture projection rooms, children's play structures and storm shelters. Finally, in order that the overall package of protection features can be easily understood, unique considerations for specific occupancies are addressed: Groups I-1, I-2, I-3, R-1, R-2, R-3, R-4, ambulatory care facilities and live/work units.

Chapter 5 General Building Heights and Areas. Chapter 5 contains the provisions that regulate the minimum type of construction for area limits and height limits based on the occupancy of the building. Height and area increases (including allowances for basements, mezzanines and equipment platforms) are permitted based on open frontage for fire department access, and the type of sprinkler protection provided and separation (Sections 503-506, 510). These thresholds are reduced for buildings over three stories in height in accordance with Sections 506.2.3 and 506.2.4. Provisions include the protection and/or separation of incidental uses (Table 509), accessory occupancies (Section 508.2) and mixed uses in the same building (Sections 506.2.2, 506.2.4, 508.3, 508.4 and 510). Unlimited area buildings are permitted in certain occupancies when they meet special provisions (Section 507).

Tables 504.3, 504.4 and 506.2 are the keystones in setting thresholds for building size based on the building's use and the materials with which it is constructed. If one then looks at Tables 504.3, 504.4 and 506.2, the relationship among group classification, allowable heights and areas and types of construction becomes apparent. Respective to each group classification, the greater the fire-resistance rating of structural elements, as represented by the type of construction, the greater the floor area and height allowances. The greater the potential fire hazards indicated as a function of the group, the lesser the height and area allowances for a particular construction type. In the 2015 edition, the table that once contained both height and area has been separated and these three new tables address the topics individually. In addition, the tables list criteria for buildings containing automatic sprinkler systems and those that do not.

Chapter 6 Types of Construction. The interdependence of these fire safety considerations can be seen by first looking at Tables 601 and 602, which show the fire-resistance ratings of the principal structural elements comprising a building in relation to the five classifications for types of construction. Type I construction is the classification that generally requires the highest fire-resistance ratings for structural elements, whereas Type V construction, which is designated as a combustible type of construction, generally requires the least amount of fire-resistance-rated structural elements. The greater the potential fire hazards indicated as a function of the group, the lesser the height and area allowances for a particular construction type. Section 603 includes a list of combustible elements that can be part of a noncombustible building (Types I and II construction).

Chapter 7 Fire and Smoke Protection Features. The provisions of Chapter 7 present the fundamental concepts of fire performance that all buildings are expected to achieve in some form. This chapter identifies the acceptable materials, techniques and methods by which proposed construction can be designed and evaluated against to determine a building's ability to limit the impact of fire. The fire-resistance-rated construction requirements within Chapter 7 provide passive resistance to the spread and effects of fire. Types of separations addressed include fire walls, fire barriers, fire partitions, horizontal assemblies, smoke barriers and smoke partitions. A fire produces heat that can weaken structural components and smoke products that cause property damage and place occupants at risk. The requirements of Chapter 7 work in unison with height and area requirements (Chapter 5), active fire detection and suppression systems (Chapter 9) and occupant egress requirements (Chapter 10) to contain a fire should it occur while helping ensure occupants are able to safely exit.

Chapter 8 Interior Finishes. This chapter contains the performance requirements for controlling fire growth within buildings by restricting interior finish and decorative materials. Past fire experience has shown that interior finish and decorative materials are key elements in the development and spread of fire. The provisions of Chapter 8 require materials used as interior finishes and decorations to meet certain flame-spread index or flame-propagation criteria based on the relative fire hazard associated with the occupancy. As smoke is also a hazard associated with fire, this chapter contains limits on the smoke development characteristics of interior finishes. The performance of the material is evaluated based on test standards.

Chapter 9 Fire Protection Systems. Chapter 9 prescribes the minimum requirements for active systems of fire protection equipment to perform the following functions: detect a fire; alert the occupants or fire department of a fire emergency; and control smoke and control or extinguish the fire. Generally, the requirements are based on the occupancy, the height and the area of the building, because these are the factors that most affect fire-fighting capabilities and the relative hazard of a specific building or portion thereof. This chapter parallels and is substantially duplicated in Chapter 9 of the *International Fire Code* (IFC); however, the IFC Chapter 9 also contains periodic testing criteria that are not contained in the IBC. In addition, the special fire protection system requirements based on use and occupancy found in IBC Chapter 4 are duplicated in IFC Chapter 9 as a user convenience.

Chapter 10 Means of Egress. The general criteria set forth in Chapter 10 regulating the design of the means of egress are established as the primary method for protection of people in buildings by allowing timely relocation or evacuation of building occupants. Both prescriptive and performance language is utilized in this chapter to provide for a basic approach in the determination of a safe exiting system for all occupancies. It addresses all portions of the egress system (i.e., exit access, exits and exit discharge) and includes design requirements as well as provisions regulating individual components. The requirements detail the size, arrangement, number and protection of means of egress components. Functional and operational characteristics also are specified for the components that will permit their safe use without special knowledge or effort. The means of egress protection requirements work in coordination with other sections of the code, such as protection of vertical openings (see Chapter 7), interior finish (see Chapter 8), fire suppression and detection systems (see Chapter 9) and numerous others, all having an impact on life safety. Chapter 10 of the IBC is duplicated in Chapter 10 of the IFC; however, the IFC contains one additional section on the means of egress system in existing buildings.

Chapter 11 Accessibility. Chapter 11 contains provisions that set forth requirements for accessibility of buildings and their associated sites and facilities for people with physical disabilities. The fundamental philosophy of the code on the subject of accessibility is that everything is required to be accessible. This is reflected in the basic applicability requirement (see Section 1103.1). The code's scoping requirements then address the conditions under which accessibility is not required in terms of exceptions to this general mandate. While the IBC contains scoping provisions for accessibility (e.g., what, where and how many), ICC/ANSI A117.1, *Accessible and Usable Buildings and Facilities*, is the referenced standard for the technical provisions (i.e., how).

There are many accessibility issues that not only benefit people with disabilities, but also provide a tangible benefit to people without disabilities. This type of requirement can be set forth in the code as generally applicable without necessarily identifying it specifically as an accessibility-related issue. Such a requirement would then be considered as having been "mainstreamed." For example, visible alarms are located in Chapter 9 and accessible means of egress and ramp requirements are addressed in Chapter 10.

Accessibility criteria for existing buildings are addressed in the *International Existing Building Code* (IEBC).

Appendix E is supplemental information included in the code to address accessibility for items in the 2010 *ADA Standards for Accessible Design* that were not typically enforceable through the standard traditional building code enforcement approach system (e.g., beds, room signage). The *International Residential Code* (IRC) references Chapter 11 for accessibility provisions; therefore, this chapter may be applicable to housing covered under the IRC.

Chapter 12 Interior Environment. Chapter 12 provides minimum standards for the interior environment of a building. The standards address the minimum sizes of spaces, minimum temperature levels, and minimum light and ventilation levels. The collection of requirements addresses limiting sound transmission through walls, ventilation of attic spaces and under floor spaces (crawl spaces). Finally, the chapter provides minimum standards for toilet and bathroom construction, including privacy shielding and standards for walls, partitions and floors to resist water intrusion and damage.

Chapter 13 Energy Efficiency. The purpose of Chapter 13 is to provide minimum design requirements that will promote efficient utilization of energy in buildings. The requirements are directed toward the design of building envelopes with adequate thermal resistance and low air

leakage, and toward the design and selection of mechanical, water heating, electrical and illumination systems that promote effective use of depletable energy resources. For the specifics of these criteria, Chapter 13 requires design and construction in compliance with the *International Energy Conservation Code* (IECC).

Chapter 14 Exterior Walls. This chapter addresses requirements for exterior walls of buildings. Minimum standards for wall covering materials, installation of wall coverings and the ability of the wall to provide weather protection are provided. This chapter also requires exterior walls that are close to lot lines, or that are bearing walls for certain types of construction, to comply with the minimum fire-resistance ratings specified in Chapters 6 and 7. The installation of each type of wall covering, be it wood, masonry, vinyl, metal composite material or an exterior insulation and finish system, is critical to its long-term performance in protecting the interior of the building from the elements and the spread of fire. Limitations on the use of combustible materials on exterior building elements such as balconies, eaves, decks and architectural trim are also addressed in this chapter.

Chapter 15 Roof Assemblies and Rooftop Structures. Chapter 15 provides standards for both roof assemblies as well as structures that sit on top of the roof of buildings. The criteria address roof construction and covering which includes the weather-protective barrier at the roof and, in most circumstances, a fire-resistant barrier. The chapter is prescriptive in nature and is based on decades of experience with various traditional materials, but it also addresses newer products such as photovoltaic shingles. These prescriptive rules are very important for satisfying performance of one type of roof covering or another. Section 1510 addresses rooftop structures, including penthouses, tanks, towers and spires. Rooftop penthouses larger than prescribed in this chapter must be treated as a story under Chapter 5.

Chapter 16 Structural Design. Chapter 16 prescribes minimum structural loading requirements for use in the design and construction of buildings and structural components. It includes minimum design loads, assignment of risk categories, as well as permitted design methodologies. Standards are provided for minimum design loads (live, dead, snow, wind, rain, flood, ice and earthquake as well as the required load combinations). The application of these loads and adherence to the serviceability criteria will enhance the protection of life and property. The chapter references and relies on many nationally recognized design standards. A key standard is the American Society of Civil Engineer's *Minimum Design Loads for Buildings and Other Structures* (ASCE 7). Structural design needs to address the conditions of the site and location. Therefore, maps are provided of rainfall, seismic, snow and wind criteria in different regions.

Chapter 17 Special Inspections and Tests. Chapter 17 provides a variety of procedures and criteria for testing materials and assemblies, labeling materials and assemblies and special inspection of structural assemblies. This chapter expands on the inspections of Chapter 1 by requiring special inspection where indicated and, in some cases, structural observation. It also spells out additional responsibilities for the owner, contractor, design professionals and special inspectors. Proper assembly of structural components, proper quality of materials used and proper application of materials are essential to ensuring that a building, once constructed, complies with the structural and fire-resistance minimums of the code and the approved design. To determine this compliance often requires continuous or frequent inspection and testing. Chapter 17 establishes standards for special inspection, testing and reporting of the work to the building official.

Chapter 18 Soils and Foundations. Chapter 18 provides criteria for geotechnical and structural considerations in the selection, design and installation of foundation systems to support the loads from the structure above. The chapter includes requirements for soils investigation and site preparation for receiving a foundation, including the allowed load-bearing values for soils and for protecting the foundation from water intrusion. Section 1808 addresses the basic requirements for all foundation types. Later sections address foundation requirements that are specific to shallow foundations and deep foundations. Due care must be exercised in the planning and design of foundation systems based on obtaining sufficient soils information, the use of accepted engineering procedures, experience and good technical judgment.

Chapter 19 Concrete. This chapter provides minimum accepted practices for the design and construction of buildings and structural components using concrete—both plain and reinforced. Chap-

ter 19 relies primarily on the reference to American Concrete Institute (ACI) 318, *Building Code Requirements for Structural Concrete*. The chapter also includes references to additional standards. Structural concrete must be designed and constructed to comply with this code and all listed standards. There are specific sections of the chapter addressing concrete slabs, anchorage to concrete and shotcrete. Because of the variable properties of material and numerous design and construction options available in the uses of concrete, due care and control throughout the construction process is necessary.

Chapter 20 Aluminum. Chapter 20 contains standards for the use of aluminum in building construction. Only the structural applications of aluminum are addressed. The chapter does not address the use of aluminum in specialty products such as storefront or window framing or architectural hardware. The use of aluminum in heating, ventilating or air-conditioning systems is addressed in the *International Mechanical Code* (IMC). The chapter references national standards from the Aluminum Association for use of aluminum in building construction, AA ASM 35, *Aluminum Sheet Metal Work in Building Construction*, and AA ADM 1, *Aluminum Design Manual*. By utilizing the standards set forth, a proper application of this material can be obtained.

Chapter 21 Masonry. This chapter provides comprehensive and practical requirements for masonry construction. The provisions of Chapter 21 require minimum accepted practices and the use of standards for the design and construction of masonry structures. The provisions address: material specifications and test methods; types of wall construction; criteria for engineered and empirical designs; and required details of construction, including the execution of construction. Masonry design methodologies including allowable stress design, strength design and empirical design are covered by provisions of the chapter. Also addressed are masonry fireplaces and chimneys, masonry heaters and glass unit masonry. Fire-resistant construction using masonry is also required to comply with Chapter 7. Masonry foundations are also subject to the requirements of Chapter 18.

Chapter 22 Steel. Chapter 22 provides the requirements necessary for the design and construction of structural steel (including composite construction), cold-formed steel, steel joists, steel cable structures and steel storage racks. The chapter specifies appropriate design and construction standards for these types of structures. It also provides a road map of the applicable technical requirements for steel structures. Because steel is a noncombustible building material, it is commonly associated with Types I and II construction; however, it is permitted to be used in all types of construction. Chapter 22 requires that the design and use of steel materials be in accordance with the specifications and standards of the American Institute of Steel Construction, the American Iron and Steel Institute, the Steel Joist Institute and the American Society of Civil Engineers.

Chapter 23 Wood. This chapter provides minimum requirements for the design of buildings and structures that use wood and wood-based products. The chapter is organized around three design methodologies: allowable stress design (ASD), load and resistance factor design (LRFD) and conventional light-frame construction. Included in the chapter are references to design and manufacturing standards for various wood and wood-based products; general construction requirements; design criteria for lateral force-resisting systems and specific requirements for the application of the three design methods. In general, only Type III, IV or V buildings may be constructed of wood.

Chapter 24 Glass and Glazing. This chapter establishes regulations for glass and glazing used in buildings and structures that, when installed, are subjected to wind, snow and dead loads. Engineering and design requirements are included in the chapter. Additional structural requirements are found in Chapter 16. Another concern of this chapter is glass and glazing used in areas where it is likely to be impacted by the occupants. Section 2406 identifies hazardous locations where glazing installed must either be safety glazing or blocked to prevent human impact. Safety glazing must meet stringent standards and be appropriately marked or identified. Additional requirements are provided for glass and glazing in guards, handrails, elevator hoistways and elevator cars, as well as in athletic facilities.

Chapter 25 Gypsum Board, Gypsum Panel Products and Plaster. Chapter 25 contains the provisions and referenced standards that regulate the design, construction and quality of gypsum board, gypsum panel products and plaster. It also addresses reinforced gypsum concrete. These represent the most common interior and exterior finish materials in the building industry. This chapter primarily addresses quality-control-related issues with regard to material specifications and

installation requirements. Most products are manufactured under the control of industry standards. The building official or inspector primarily needs to verify that the appropriate product is used and properly installed for the intended use and location. While often simply used as wall and ceiling coverings, proper design and application are necessary to provide weather resistance and required fire protection for both structural and nonstructural building components.

Chapter 26 Plastic. The use of plastics in building construction and components is addressed in Chapter 26. This chapter provides standards addressing foam plastic insulation, foam plastics used as interior finish and trim, and other plastic veneers used on the inside or outside of a building. Plastic siding is regulated by Chapter 14. Sections 2606 through 2611 address the use of light-transmitting plastics in various configurations such as walls, roof panels, skylights, signs and as glazing. Requirements for the use of fiber-reinforced polymers, fiberglass-reinforced polymers and reflective plastic core insulation are also contained in this chapter. Additionally, requirements specific to the use of wood-plastic composites and plastic lumber are contained in this chapter. Some plastics exhibit rapid flame spread and heavy smoke density characteristics when exposed to fire. Exposure to the heat generated by a fire can cause some plastics to deform, which can affect their performance. The requirements and limitations of this chapter are necessary to control the use of plastic and foam plastic products such that they do not compromise the safety of building occupants.

Chapter 27 Electrical. Since electrical systems and components are an integral part of almost all structures, it is necessary for the code to address the installation of such systems. For this purpose, Chapter 27 references the *National Electrical Code* (NEC). In addition, Section 2702 addresses emergency and standby power requirements. Such systems must comply with the *International Fire Code* (IFC) and referenced standards. This section also provides references to the various code sections requiring emergency and standby power, such as high-rise buildings and buildings containing hazardous materials.

Chapter 28 Mechanical Systems. Nearly all buildings will include mechanical systems. This chapter provides references to the *International Mechanical Code* (IMC) and the *International Fuel Gas Code* (IFGC) for the design and installation of mechanical systems. In addition, Chapter 21 of this code is referenced for masonry chimneys, fireplaces and barbecues.

Chapter 29 Plumbing Systems. Chapter 29 regulates the minimum number of plumbing fixtures that must be provided for every type of building. This chapter also regulates the location of the required fixtures in various types of buildings. This section requires separate facilities for males and females except for certain types of small occupancies. The regulations in this chapter come directly from Chapters 3 and 4 of the *International Plumbing Code* (IPC).

Chapter 30 Elevators and Conveying Systems. Chapter 30 provides standards for the installation of elevators into buildings. Referenced standards provide the requirements for the elevator system and mechanisms. Detailed standards are provided in the chapter for hoistway enclosures, machine rooms and requirements for sizing of elevators. Beginning in the 2015 edition, the elevator lobby requirements were moved from Chapter 7 to Chapter 30 to pull all the elevator-related construction requirements together. New provisions were added in the 2009 edition of the *International Building Code* for Fire Service Access Elevators required in high-rise buildings and for the optional choice of Occupant Evacuation Elevators (see Section 403).

Chapter 31 Special Construction. Chapter 31 contains a collection of regulations for a variety of unique structures and architectural features. Pedestrian walkways and tunnels connecting two buildings are addressed in Section 3104. Membrane and air-supported structures are addressed by Section 3102. Safeguards for swimming pool safety are found in Section 3109. Standards for temporary structures, including permit requirements are provided in Section 3103. Structures as varied as awnings, marquees, signs, telecommunication and broadcast towers and automatic vehicular gates are also addressed (see Sections 3105 through 3108 and 3110).

Chapter 32 Encroachments into the Public Right-of-way. Buildings and structures from time to time are designed to extend over a property line and into the public right-of-way. Local regulations outside of the building code usually set limits to such encroachments, and such regulations take precedence over the provisions of this chapter. Standards are provided for encroachments below grade for structural support, vaults and areaways. Encroachments above grade are divided into below 8 feet, 8 feet to 15 feet, and above 15 feet, because of headroom and vehicular height

issues. This includes steps, columns, awnings, canopies, marquees, signs, windows and balconies. Similar architectural features above grade are also addressed. Pedestrian walkways must also comply with Chapter 31.

Chapter 33 Safeguards During Construction. Chapter 33 provides safety requirements during construction and demolition of buildings and structures. These requirements are intended to protect the public from injury and adjoining property from damage. In addition the chapter provides for the progressive installation and operation of exit stairways and standpipe systems during construction.

Chapter 34 Reserved. During the last code change cycle the membership voted to delete Chapter 34, Existing Structures, from the IBC and reference the IEBC. The provisions that were in Chapter 34 will appear in the *International Existing Building Code* (IEBC). Sections 3402 through 3411 are repeated as IEBC Chapter 4 and Section 3412 as Chapter 14.

Chapter 35 Referenced Standards. The code contains numerous references to standards that are used to regulate materials and methods of construction. Chapter 35 contains a comprehensive list of all standards that are referenced in the code, including the appendices. The standards are part of the code to the extent of the reference to the standard (see Section 102.4). Compliance with the referenced standard is necessary for compliance with this code. By providing specifically adopted standards, the construction and installation requirements necessary for compliance with the code can be readily determined. The basis for code compliance is, therefore, established and available on an equal basis to the building code official, contractor, designer and owner.

Chapter 35 is organized in a manner that makes it easy to locate specific standards. It lists all of the referenced standards, alphabetically, by acronym of the promulgating agency of the standard. Each agency's standards are then listed in either alphabetical or numeric order based upon the standard identification. The list also contains the title of the standard; the edition (date) of the standard referenced; any addenda included as part of the ICC adoption; and the section or sections of this code that reference the standard.

Appendices. Appendices are provided in the IBC to offer optional or supplemental criteria to the provisions in the main chapters of the code. Appendices provide additional information for administration of the Department of Building Safety as well as standards not typically administered by all building departments. Appendices have the same force and effect as the first 35 chapters of the IBC only when explicitly adopted by the jurisdiction.

Appendix A Employee Qualifications. Effective administration and enforcement of the family of *International Codes* depends on the training and expertise of the personnel employed by the jurisdiction and his or her knowledge of the codes. Section 103 of the code establishes the Department of Building Safety and calls for the appointment of a building official and deputies such as plans examiners and inspectors. Appendix A provides standards for experience, training and certification for the building official and the other staff mentioned in Chapter 1.

Appendix B Board of Appeals. Section 113 of Chapter 1 requires the establishment of a board of appeals to hear appeals regarding determinations made by the building official. Appendix B provides qualification standards for members of the board as well as operational procedures of such board.

Appendix C Group U—Agricultural Buildings. Appendix C provides a more liberal set of standards for the construction of agricultural buildings, rather than strictly following the Utility building provision, reflective of their specific usage and limited occupant load. The provisions of the appendix, when adopted, allow reasonable heights and areas commensurate with the risk of agricultural buildings.

Appendix D Fire Districts. Fire districts have been a tool used to limit conflagration hazards in areas of a city with intense and concentrated development. More frequently used under the model codes that preceded the *International Building Code* (IBC), the appendix is provided to allow jurisdictions to continue the designation and use of fire districts. Fire district standards restrict certain occupancies within the district, as well as setting higher minimum construction standards.

Appendix E Supplementary Accessibility Requirements. The Architectural and Transportation Barriers Compliance Board (U.S. Access Board) has revised and updated its accessibility guidelines for buildings and facilities covered by the Americans with Disabilities Act (ADA) and the Architectural Barriers Act (ABA). Appendix E includes scoping requirements contained in the *2010 ADA Standards for Accessible Design* that are not in Chapter 11 and not otherwise mentioned or mainstreamed throughout the code. Items in the appendix address subjects not typically addressed in building codes (e.g., beds, room signage, transportation facilities).

Appendix F Rodentproofing. The provisions of this appendix are minimum mechanical methods to prevent the entry of rodents into a building. These standards, when used in conjunction with cleanliness and maintenance programs, can significantly reduce the potential of rodents invading a building.

Appendix G Flood-resistant Construction. Appendix G is intended to fulfill the flood-plain management and administrative requirements of the National Flood Insurance Program (NFIP) that are not included in the code. Communities that adopt the *International Building Code* (IBC) and Appendix G will meet the minimum requirements of NFIP as set forth in Title 44 of the Code of Federal Regulations.

Appendix H Signs. Appendix H gathers in one place the various code standards that regulate the construction and protection of outdoor signs. Whenever possible, the appendix provides standards in performance language, thus allowing the widest possible application.

Appendix I Patio Covers. Appendix I provides standards applicable to the construction and use of patio covers. It is limited in application to patio covers accessory to dwelling units. Covers of patios and other outdoor areas associated with restaurants, mercantile buildings, offices, nursing homes or other nondwelling occupancies would be subject to standards in the main code and not this appendix.

Appendix J Grading. Appendix J provides standards for the grading of properties. The appendix also provides standards for administration and enforcement of a grading program including permit and inspection requirements. Appendix J was originally developed in the 1960s and used for many years in jurisdictions throughout the western states. It is intended to provide consistent and uniform code requirements anywhere grading is considered an issue.

Appendix K Administrative Provisions. Appendix K primarily provides administrative provisions for jurisdictions adopting and enforcing NFPA 70—the *National Electrical Code* (NEC). The provisions contained in this appendix are compatible with administrative and enforcement provisions contained in Chapter 1 of the IBC and the other *International Codes*. Annex H of NFPA 70 also contains administrative provisions for the NEC; however, some of its provisions are not compatible with IBC Chapter 1. Section K110 also contains technical provisions that are unique to this appendix and are in addition to technical standards of NFPA 70.

Appendix L Earthquake Recording Instrumentation. The purpose of this appendix is to foster the collection of ground motion data, particularly from strong-motion earthquakes. When this ground motion data is synthesized, it may be useful in developing future improvements to the earthquake provisions of the code.

Appendix M Tsunami-Generated Flood Hazard. Addressing a tsunami risk for all types of construction in a tsunami hazard zone through building code requirements would typically not be cost effective, making tsunami-resistant construction impractical at an individual building level. However, this appendix does allow the adoption and enforcement of requirements for tsunami hazard zones that regulate the presence of high risk or high hazard structures.

LEGISLATION

Jurisdictions wishing to adopt the 2015 *International Building Code* as an enforceable regulation governing structures and premises should ensure that certain factual information is included in the adopting legislation at the time adoption is being considered by the appropriate governmental body. The following sample adoption legislation addresses several key elements, including the information required for insertion into the code text.

SAMPLE LEGISLATION FOR ADOPTION OF THE *INTERNATIONAL BUILDING CODE* ORDINANCE NO._____

A[N] **[ORDINANCE/STATUTE/REGULATION]** of the **[JURISDICTION]** adopting the 2015 edition of the *International Building Code*, regulating and governing the conditions and maintenance of all property, buildings and structures; by providing the standards for supplied utilities and facilities and other physical things and conditions essential to ensure that structures are safe, sanitary and fit for occupation and use; and the condemnation of buildings and structures unfit for human occupancy and use and the demolition of such structures in the **[JURISDICTION]**; providing for the issuance of permits and collection of fees therefor; repealing **[ORDINANCE/STATUTE/REGULATION]** No. _____ of the **[JURISDICTION]** and all other ordinances or parts of laws in conflict therewith.

The **[GOVERNING BODY]** of the **[JURISDICTION]** does ordain as follows:

Section 1. That a certain document, three (3) copies of which are on file in the office of the **[TITLE OF JURISDICTION'S KEEPER OF RECORDS]** of **[NAME OF JURISDICTION]**, being marked and designated as the *International Building Code*, 2015 edition, including Appendix Chapters **[FILL IN THE APPENDIX CHAPTERS BEING ADOPTED]** (see *International Building Code* Section 101.2.1, 2015 edition), as published by the International Code Council, be and is hereby adopted as the Building Code of the **[JURISDICTION]**, in the State of **[STATE NAME]** for regulating and governing the conditions and maintenance of all property, buildings and structures; by providing the standards for supplied utilities and facilities and other physical things and conditions essential to ensure that structures are safe, sanitary and fit for occupation and use; and the condemnation of buildings and structures unfit for human occupancy and use and the demolition of such structures as herein provided; providing for the issuance of permits and collection of fees therefor; and each and all of the regulations, provisions, penalties, conditions and terms of said Building Code on file in the office of the **[JURISDICTION]** are hereby referred to, adopted, and made a part hereof, as if fully set out in this legislation, with the additions, insertions, deletions and changes, if any, prescribed in Section 2 of this ordinance.

Section 2. The following sections are hereby revised:

Section 101.1. Insert: **[NAME OF JURISDICTION]**

Section 1612.3. Insert: **[NAME OF JURISDICTION]**

Section 1612.3. Insert: **[DATE OF ISSUANCE]**

Section 3. That **[ORDINANCE/STATUTE/REGULATION]** No. _____ of **[JURISDICTION]** entitled **[FILL IN HERE THE COMPLETE TITLE OF THE LEGISLATION OR LAWS IN EFFECT AT THE PRESENT TIME SO THAT THEY WILL BE REPEALED BY DEFINITE MENTION]** and all other ordinances or parts of laws in conflict herewith are hereby repealed.

Section 4. That if any section, subsection, sentence, clause or phrase of this legislation is, for any reason, held to be unconstitutional, such decision shall not affect the validity of the remaining portions of this ordinance. The **[GOVERNING BODY]** hereby declares that it would have passed this law, and each section, subsection, clause or phrase thereof, irrespective of the fact that any one or more sections, subsections, sentences, clauses and phrases be declared unconstitutional.

Section 5. That nothing in this legislation or in the Building Code hereby adopted shall be construed to affect any suit or proceeding impending in any court, or any rights acquired, or liability incurred, or any cause or causes of action acquired or existing, under any act or ordinance hereby repealed as cited in Section 3 of this law; nor shall any just or legal right or remedy of any character be lost, impaired or affected by this legislation.

Section 6. That the **[JURISDICTION'S KEEPER OF RECORDS]** is hereby ordered and directed to cause this legislation to be published. (An additional provision may be required to direct the number of times the legislation is to be published and to specify that it is to be in a newspaper in general circulation. Posting may also be required.)

Section 7. That this law and the rules, regulations, provisions, requirements, orders and matters established and adopted hereby shall take effect and be in full force and effect **[TIME PERIOD]** from and after the date of its final passage and adoption.

TABLE OF CONTENTS

CHAPTER 1 SCOPE AND ADMINISTRATION.... 1

PART 1—SCOPE AND APPLICATION..... 1

Section

101 General 1

102 Applicability 1

PART 2—ADMINISTRATION AND ENFORCEMENT 2

103 Department of Building Safety 2

104 Duties and Powers of Building Official 2

105 Permits 4

106 Floor and Roof Design Loads 6

107 Submittal Documents 6

108 Temporary Structures and Uses 7

109 Fees 7

110 Inspections 8

111 Certificate of Occupancy 9

112 Service Utilities 9

113 Board of Appeals 9

114 Violations 10

115 Stop Work Order 10

116 Unsafe Structures and Equipment 10

CHAPTER 2 DEFINITIONS..... 11

Section

201 General 11

202 Definitions 11

CHAPTER 3 USE AND OCCUPANCY CLASSIFICATION..... 41

Section

301 General 41

302 Classification 41

303 Assembly Group A 41

304 Business Group B 42

305 Educational Group E 42

306 Factory Group F 42

307 High-hazard Group H 43

308 Institutional Group I 48

309 Mercantile Group M 49

310 Residential Group R 49

311 Storage Group S 50

312 Utility and Miscellaneous Group U 51

CHAPTER 4 SPECIAL DETAILED REQUIREMENTS BASED ON USE AND OCCUPANCY 53

Section

401 Scope 53

402 Covered Mall and Open Mall Buildings 53

403 High-rise Buildings 57

404 Atriums 60

405 Underground Buildings 61

406 Motor-vehicle-related Occupancies 62

407 Group I-2 66

408 Group I-3 69

409 Motion Picture Projection Rooms 71

410 Stages, Platforms and Technical Production Areas 72

411 Special Amusement Buildings 74

412 Aircraft-related Occupancies 74

413 Combustible Storage 77

414 Hazardous Materials 78

415 Groups H-1, H-2, H-3, H-4 and H-5 81

416 Application of Flammable Finishes 91

417 Drying Rooms 91

418 Organic Coatings 91

419 Live/work Units 91

420 Groups I-1, R-1, R-2, R-3 and R-4 92

421 Hydrogen Fuel Gas Rooms 93

422 Ambulatory Care Facilities 93

423 Storm Shelters 94

424 Children's Play Structures 94

425 Hyperbaric Facilities 95

426 Combustible Dusts, Grain Processing and Storage 95

CHAPTER 5 GENERAL BUILDING HEIGHTS AND AREAS 97

Section

501 General 97

502 Definitions 97

503 General Building Height and Area Limitations 97

504 Building Height and Number of Stories 97
505 Mezzanines and Equipment Platforms 98
506 Building Area 101
507 Unlimited Area Buildings 105
508 Mixed Use and Occupancy 107
509 Incidental Uses 108
510 Special Provisions 110

CHAPTER 6 TYPES OF CONSTRUCTION 113

Section
601 General 113
602 Construction Classification 113
603 Combustible Material in Types I and II Construction 115

CHAPTER 7 FIRE AND SMOKE PROTECTION FEATURES 117

Section
701 General 117
702 Definitions 117
703 Fire-resistance Ratings and Fire Tests 117
704 Fire-resistance Rating of Structural Members 118
705 Exterior Walls 120
706 Fire Walls 124
707 Fire Barriers 127
708 Fire Partitions 128
709 Smoke Barriers 129
710 Smoke Partitions 130
711 Horizontal Assemblies 130
712 Vertical Openings 131
713 Shaft Enclosures 132
714 Penetrations 134
715 Fire-resistant Joint Systems 137
716 Opening Protectives 137
717 Ducts and Air Transfer Openings 143
718 Concealed Spaces 148
719 Fire-resistance Requirements for Plaster 150
720 Thermal- and Sound-insulating Materials 150
721 Prescriptive Fire Resistance 151
722 Calculated Fire Resistance 152

CHAPTER 8 INTERIOR FINISHES 203

Section
801 General 203
802 Definitions 203
803 Wall and Ceiling Finishes 203
804 Interior Floor Finish 206
805 Combustible Materials in Types I and II Construction 206
806 Decorative Materials and Trim 206
807 Insulation 207
808 Acoustical Ceiling Systems 207

CHAPTER 9 FIRE PROTECTION SYSTEMS . . . 209

Section
901 General 209
902 Definitions 209
903 Automatic Sprinkler Systems 210
904 Alternative Automatic Fire-extinguishing Systems 216
905 Standpipe Systems 219
906 Portable Fire Extinguishers 221
907 Fire Alarm and Detection Systems 223
908 Emergency Alarm Systems 234
909 Smoke Control Systems 235
910 Smoke and Heat Removal 243
911 Fire Command Center 244
912 Fire Department Connections 245
913 Fire Pumps 246
914 Emergency Responder Safety Features 246
915 Carbon Monoxide Detection 247
916 Emergency Responder Radio Coverage 248

CHAPTER 10 MEANS OF EGRESS 249

Section
1001 Administration 249
1002 Definitions 249
1003 General Means of Egress 250
1004 Occupant Load 251
1005 Means of Egress Sizing 252
1006 Number of Exits and Exit Access Doorways 253
1007 Exit and Exit Access Doorway Configuration 256
1008 Means of Egress Illumination 257
1009 Accessible Means of Egress 257
1010 Doors, Gates and Turnstiles 260
1011 Stairways 268
1012 Ramps 271

1013 Exit Signs 272
1014 Handrails. 273
1015 Guards. 274
1016 Exit Access 276
1017 Exit Access Travel Distance. 277
1018 Aisles 277
1019 Exit Access Stairways and Ramps 278
1020 Corridors. 278
1021 Egress Balconies. 280
1022 Exits 280
1023 Interior Exit Stairways and Ramps. 280
1024 Exit Passageways 282
1025 Luminous Egress Path Markings 283
1026 Horizontal Exits 284
1027 Exterior Exit Stairways and Ramps 285
1028 Exit Discharge 286
1029 Assembly 287
1030 Emergency Escape and Rescue 293

CHAPTER 11 ACCESSIBILITY 295

Section

1101 General 295
1102 Definitions 295
1103 Scoping Requirements 295
1104 Accessible Route 296
1105 Accessible Entrances 297
1106 Parking and Passenger Loading Facilities 297
1107 Dwelling Units and Sleeping Units 298
1108 Special Occupancies. 302
1109 Other Features and Facilities 305
1110 Recreational Facilities 308
1111 Signage 310

CHAPTER 12 INTERIOR ENVIRONMENT. 311

Section

1201 General 311
1202 Definitions 311
1203 Ventilation 311
1204 Temperature Control 313
1205 Lighting 313
1206 Yards or Courts. 314
1207 Sound Transmission 314
1208 Interior Space Dimensions 314
1209 Access to Unoccupied Spaces 315
1210 Toilet and Bathroom Requirements 315

CHAPTER 13 ENERGY EFFICIENCY 317

Section

1301 General. 317

CHAPTER 14 EXTERIOR WALLS 319

Section

1401 General. 319
1402 Definitions 319
1403 Performance Requirements 319
1404 Materials. 320
1405 Installation of Wall Coverings 321
1406 Combustible Materials on the Exterior Side of Exterior Walls 326
1407 Metal Composite Materials (MCM) 327
1408 Exterior Insulation and Finish Systems (EIFS) 330
1409 High-pressure Decorative Exterior-grade Compact Laminates (HPL) 330
1410 Plastic Composite Decking 331

CHAPTER 15 ROOF ASSEMBLIES AND ROOFTOP STRUCTURES. 333

Section

1501 General. 333
1502 Definitions 333
1503 Weather Protection. 333
1504 Performance Requirements 334
1505 Fire Classification 335
1506 Materials. 336
1507 Requirements for Roof Coverings 336
1508 Roof Insulation. 348
1509 Radiant Barriers Installed Above Deck 348
1510 Rooftop Structures 348
1511 Reroofing 351
1512 Photovoltaic Panels and Modules 351

CHAPTER 16 STRUCTURAL DESIGN. 353

Section

1601 General. 353
1602 Definitions and Notations 353
1603 Construction Documents 353
1604 General Design Requirements 354
1605 Load Combinations 357
1606 Dead Loads 359
1607 Live Loads 359
1608 Snow Loads 366

1609 Wind Loads 366
1610 Soil Lateral Loads 375
1611 Rain Loads 380
1612 Flood Loads 380
1613 Earthquake Loads 386
1614 Atmospheric Ice Loads 399
1615 Structural Integrity 399

CHAPTER 17 SPECIAL INSPECTIONS AND TESTS 403

Section
1701 General 403
1702 Definitions 403
1703 Approvals 403
1704 Special Inspections and Tests, Contractor Responsibility and Structural Observation 404
1705 Required Special Inspections and Tests 406
1706 Design Strengths of Materials 414
1707 Alternative Test Procedure 414
1708 In-situ Load Tests 414
1709 Preconstruction Load Tests 415

CHAPTER 18 SOILS AND FOUNDATIONS 417

Section
1801 General 417
1802 Definitions 417
1803 Geotechnical Investigations 417
1804 Excavation, Grading and Fill 419
1805 Dampproofing and Waterproofing 420
1806 Presumptive Load-bearing Values of Soils 421
1807 Foundation Walls, Retaining Walls and Embedded Posts and Poles 422
1808 Foundations 428
1809 Shallow Foundations 431
1810 Deep Foundations 432

CHAPTER 19 CONCRETE 447

Section
1901 General 447
1902 Definitions 447
1903 Specifications for Tests and Materials 447
1904 Durability Requirements 447
1905 Modifications to ACI 318 448
1906 Structural Plain Concrete 450
1907 Minimum Slab Provisions 450
1908 Shotcrete 451

CHAPTER 20 ALUMINUM 453

Section
2001 General 453
2002 Materials 453

CHAPTER 21 MASONRY 455

Section
2101 General 455
2102 Definitions and Notations 455
2103 Masonry Construction Materials 456
2104 Construction 457
2105 Quality Assurance 457
2106 Seismic Design 457
2107 Allowable Stress Design 457
2108 Strength Design of Masonry 458
2109 Empirical Design of Masonry 458
2110 Glass Unit Masonry 460
2111 Masonry Fireplaces 460
2112 Masonry Heaters 462
2113 Masonry Chimneys 463

CHAPTER 22 STEEL 469

Section
2201 General 469
2202 Definitions 469
2203 Identification and Protection of Steel for Structural Purposes 469
2204 Connections 469
2205 Structural Steel 469
2206 Composite Structural Steel and Concrete Structures 470
2207 Steel Joists 470
2208 Steel Cable Structures 471
2209 Steel Storage Racks 471
2210 Cold-formed Steel 471
2211 Cold-formed Steel Light-frame Construction . . 471

CHAPTER 23 WOOD 473

Section
2301 General 473
2302 Definitions 473
2303 Minimum Standards and Quality 473
2304 General Construction Requirements 477

2305 General Design Requirements for Lateral Force-resisting Systems 488
2306 Allowable Stress Design. 490
2307 Load and Resistance Factor Design 491
2308 Conventional Light-frame Construction. 491
2309 Wood Frame Construction Manual 539

CHAPTER 24 GLASS AND GLAZING 541

Section
2401 General 541
2402 Definitions 541
2403 General Requirements for Glass. 541
2404 Wind, Snow, Seismic and Dead Loads on Glass 541
2405 Sloped Glazing and Skylights 543
2406 Safety Glazing 544
2407 Glass in Handrails and Guards 546
2408 Glazing in Athletic Facilities 546
2409 Glass in Walkways, Elevator Hoistways and Elevator Cars 547

CHAPTER 25 GYPSUM BOARD, GYPSUM PANEL PRODUCTS AND PLASTER. 549

Section
2501 General 549
2502 Definitions 549
2503 Inspection 549
2504 Vertical and Horizontal Assemblies. 549
2505 Shear Wall Construction. 549
2506 Gypsum Board and Gypsum Panel Product Materials 549
2507 Lathing and Plastering 550
2508 Gypsum Construction. 550
2509 Showers and Water Closets 552
2510 Lathing and Furring for Cement Plaster (Stucco). 552
2511 Interior Plaster 552
2512 Exterior Plaster. 553
2513 Exposed Aggregate Plaster. 554
2514 Reinforced Gypsum Concrete 554

CHAPTER 26 PLASTIC 555

Section
2601 General 555
2602 Definitions 555
2603 Foam Plastic Insulation 555
2604 Interior Finish and Trim. 560
2605 Plastic Veneer 561
2606 Light-transmitting Plastics. 561
2607 Light-transmitting Plastic Wall Panels 562
2608 Light-transmitting Plastic Glazing. 563
2609 Light-transmitting Plastic Roof Panels 563
2610 Light-transmitting Plastic Skylight Glazing . . . 564
2611 Light-transmitting Plastic Interior Signs 564
2612 Plastic Composites. 565
2613 Fiber-reinforced Polymer. 565
2614 Reflective Plastic Core Insulation 566

CHAPTER 27 ELECTRICAL 567

Section
2701 General. 567
2702 Emergency and Standby Power Systems. 567

CHAPTER 28 MECHANICAL SYSTEMS. 569

Section
2801 General. 569

CHAPTER 29 PLUMBING SYSTEMS. 571

Section
2901 General. 571
2902 Minimum Plumbing Facilities 571

CHAPTER 30 ELEVATORS AND CONVEYING SYSTEMS 575

Section
3001 General. 575
3002 Hoistway Enclosures 575
3003 Emergency Operations. 576
3004 Conveying Systems 576
3005 Machine Rooms 576
3006 Elevator Lobbies and Hoistway Opening Protection 577
3007 Fire Service Access Elevator 578
3008 Occupant Evacuation Elevators 579

CHAPTER 31 SPECIAL CONSTRUCTION 583

Section
3101 General. 583
3102 Membrane Structures. 583
3103 Temporary Structures. 584
3104 Pedestrian Walkways and Tunnels 584

3105 Awnings and Canopies 586
3106 Marquees 586
3107 Signs 586
3108 Telecommunication and Broadcast Towers 586
3109 Swimming Pool Enclosures and Safety Devices 587
3110 Automatic Vehicular Gates 588
3111 Photovoltaic Panels and Modules 588

CHAPTER 32 ENCROACHMENTS INTO THE PUBLIC RIGHT-OF-WAY 589

Section
3201 General 589
3202 Encroachments 589

CHAPTER 33 SAFEGUARDS DURING CONSTRUCTION 591

Section
3301 General 591
3302 Construction Safeguards 591
3303 Demolition 591
3304 Site Work 591
3305 Sanitary 592
3306 Protection of Pedestrians 592
3307 Protection of Adjoining Property 593
3308 Temporary Use of Streets, Alleys and Public Property 593
3309 Fire Extinguishers 593
3310 Means of Egress 593
3311 Standpipes 593
3312 Automatic Sprinkler System 594
3313 Water Supply for Fire Protection 594

CHAPTER 34 RESERVED 595

CHAPTER 35 REFERENCED STANDARDS 597

APPENDIX A EMPLOYEE QUALIFICATIONS 621

Section
A101 Building Official Qualifications 621
A102 Referenced Standards 621

APPENDIX B BOARD OF APPEALS 623

Section
B101 General 623

APPENDIX C GROUP U—AGRICULTURAL BUILDINGS 625

Section
C101 General 625
C102 Allowable Height and Area 625
C103 Mixed Occupancies 625
C104 Exits 625

APPENDIX D FIRE DISTRICTS 627

Section
D101 General 627
D102 Building Restrictions 627
D103 Changes to Buildings 628
D104 Buildings Located Partially in the Fire District 628
D105 Exceptions to Restrictions in Fire District 628
D106 Referenced Standards 629

APPENDIX E SUPPLEMENTARY ACCESSIBILITY REQUIREMENTS 631

Section
E101 General 631
E102 Definitions 631
E103 Accessible Route 631
E104 Special Occupancies 631
E105 Other Features and Facilities 632
E106 Telephones 632
E107 Signage 633
E108 Bus Stops 633
E109 Transportation Facilities and Stations 634
E110 Airports 634
E111 Referenced Standards 635

APPENDIX F RODENTPROOFING 637

Section
F101 General 637

APPENDIX G FLOOD-RESISTANT CONSTRUCTION 639

Section
G101 Administration 639
G102 Applicability 639
G103 Powers and Duties 639
G104 Permits 640
G105 Variances 641
G201 Definitions 642

G301 Subdivisions 642
G401 Site Improvement 642
G501 Manufactured Homes 643
G601 Recreational Vehicles 643
G701 Tanks 643
G801 Other Building Work 643
G901 Temporary Structures and Temporary Storage 644
G1001 Utility and Miscellaneous Group U 644
G1101 Referenced Standards 644

APPENDIX H SIGNS 645

Section
H101 General 645
H102 Definitions 645
H103 Location 645
H104 Identification 645
H105 Design and Construction 646
H106 Electrical 646
H107 Combustible Materials 646
H108 Animated Devices 646
H109 Ground Signs 646
H110 Roof Signs 647
H111 Wall Signs 647
H112 Projecting Signs 647
H113 Marquee Signs 648
H114 Portable Signs 648
H115 Referenced Standards 648

APPENDIX I PATIO COVERS 649

Section
I101 General 649
I102 Definition 649
I103 Exterior Walls and Openings 649
I104 Height 649
I105 Structural Provisions 649

APPENDIX J GRADING 651

Section
J101 General 651
J102 Definitions 651
J103 Permits Required 651
J104 Permit Application and Submittals 651
J105 Inspections 652
J106 Excavations 652
J107 Fills 652
J108 Setbacks 652
J109 Drainage and Terracing 654
J110 Erosion Control 654
J111 Referenced Standards 654

APPENDIX K ADMINISTRATIVE PROVISIONS 655

Section
K101 General 655
K102 Applicability 655
K103 Permits 655
K104 Construction Documents 656
K105 Alternative Engineered Design 656
K106 Required Inspections 656
K107 Prefabricated Construction 656
K108 Testing 657
K109 Reconnection 657
K110 Condemning Electrical Systems 657
K111 Electrical Provisions 657

APPENDIX L EARTHQUAKE RECORDING INSTRUMENTATION 659

L101 General 659

APPENDIX M TSUMANI-GENERATED FLOOD HAZARD 661

M101 Tsunami-generated Flood Hazard 661
M102 Referenced Standards 661

INDEX 663

CHAPTER 1

SCOPE AND ADMINISTRATION

User note: Code change proposals to this chapter will be considered by the Administrative Code Development Committee during the 2016 (Group B) Code Development Cycle. See explanation on page iv.

PART 1—SCOPE AND APPLICATION

SECTION 101
GENERAL

[A] 101.1 Title. These regulations shall be known as the *Building Code* of **[NAME OF JURISDICTION]**, hereinafter referred to as "this code."

[A] 101.2 Scope. The provisions of this code shall apply to the construction, *alteration*, relocation, enlargement, replacement, *repair*, equipment, use and occupancy, location, maintenance, removal and demolition of every building or structure or any appurtenances connected or attached to such buildings or structures.

Exception: Detached one- and two-family *dwellings* and multiple single-family *dwellings (townhouses)* not more than three *stories above grade plane* in height with a separate *means of egress*, and their accessory structures not more than three *stories above grade plane* in height, shall comply with the *International Residential Code*.

[A] 101.2.1 Appendices. Provisions in the appendices shall not apply unless specifically adopted.

[A] 101.3 Intent. The purpose of this code is to establish the minimum requirements to provide a reasonable level of safety, public health and general welfare through structural strength, *means of egress* facilities, stability, sanitation, adequate light and ventilation, energy conservation, and safety to life and property from fire and other hazards attributed to the built environment and to provide a reasonable level of safety to fire fighters and emergency responders during emergency operations.

[A] 101.4 Referenced codes. The other codes listed in Sections 101.4.1 through 101.4.7 and referenced elsewhere in this code shall be considered part of the requirements of this code to the prescribed extent of each such reference.

[A] 101.4.1 Gas. The provisions of the *International Fuel Gas Code* shall apply to the installation of gas piping from the point of delivery, gas appliances and related accessories as covered in this code. These requirements apply to gas piping systems extending from the point of delivery to the inlet connections of appliances and the installation and operation of residential and commercial gas appliances and related accessories.

[A] 101.4.2 Mechanical. The provisions of the *International Mechanical Code* shall apply to the installation, *alterations*, *repairs* and replacement of mechanical systems, including equipment, appliances, fixtures, fittings and/or appurtenances, including ventilating, heating, cooling, air-conditioning and refrigeration systems, incinerators and other energy-related systems.

[A] 101.4.3 Plumbing. The provisions of the *International Plumbing Code* shall apply to the installation, *alteration*, *repair* and replacement of plumbing systems, including equipment, appliances, fixtures, fittings and appurtenances, and where connected to a water or sewage system and all aspects of a medical gas system. The provisions of the *International Private Sewage Disposal Code* shall apply to private sewage disposal systems.

[A] 101.4.4 Property maintenance. The provisions of the *International Property Maintenance Code* shall apply to existing structures and premises; equipment and facilities; light, ventilation, space heating, sanitation, life and fire safety hazards; responsibilities of *owners*, operators and occupants; and occupancy of existing premises and structures.

[A] 101.4.5 Fire prevention. The provisions of the *International Fire Code* shall apply to matters affecting or relating to structures, processes and premises from the hazard of fire and explosion arising from the storage, handling or use of structures, materials or devices; from conditions hazardous to life, property or public welfare in the occupancy of structures or premises; and from the construction, extension, *repair, alteration* or removal of fire suppression, *automatic sprinkler systems* and alarm systems or fire hazards in the structure or on the premises from occupancy or operation.

[A] 101.4.6 Energy. The provisions of the *International Energy Conservation Code* shall apply to all matters governing the design and construction of buildings for energy efficiency.

[A] 101.4.7 Existing buildings. The provisions of the *International Existing Building Code* shall apply to matters governing the *repair*, *alteration*, change of occupancy, *addition* to and relocation of existing buildings.

SECTION 102
APPLICABILITY

[A] 102.1 General. Where there is a conflict between a general requirement and a specific requirement, the specific requirement shall be applicable. Where, in any specific case, different sections of this code specify different materials, methods of construction or other requirements, the most restrictive shall govern.

[A] 102.2 Other laws. The provisions of this code shall not be deemed to nullify any provisions of local, state or federal law.

[A] 102.3 Application of references. References to chapter or section numbers, or to provisions not specifically identified by number, shall be construed to refer to such chapter, section or provision of this code.

[A] 102.4 Referenced codes and standards. The codes and standards referenced in this code shall be considered part of the requirements of this code to the prescribed extent of each such reference and as further regulated in Sections 102.4.1 and 102.4.2.

[A] 102.4.1 Conflicts. Where conflicts occur between provisions of this code and referenced codes and standards, the provisions of this code shall apply.

[A] 102.4.2 Provisions in referenced codes and standards. Where the extent of the reference to a referenced code or standard includes subject matter that is within the scope of this code or the International Codes listed in Section 101.4, the provisions of this code or the International Codes listed in Section 101.4, as applicable, shall take precedence over the provisions in the referenced code or standard.

[A] 102.5 Partial invalidity. In the event that any part or provision of this code is held to be illegal or void, this shall not have the effect of making void or illegal any of the other parts or provisions.

[A] 102.6 Existing structures. The legal occupancy of any structure existing on the date of adoption of this code shall be permitted to continue without change, except as otherwise specifically provided in this code, the *International Existing Building Code*, the *International Property Maintenance Code* or the *International Fire Code*.

[A] 102.6.1 Buildings not previously occupied. A building or portion of a building that has not been previously occupied or used for its intended purpose in accordance with the laws in existence at the time of its completion shall comply with the provisions of the *International Building Code* or *International Residential Code*, as applicable, for new construction or with any current permit for such occupancy.

[A] 102.6.2 Buildings previously occupied. The legal occupancy of any building existing on the date of adoption of this code shall be permitted to continue without change, except as otherwise specifically provided in this code, the *International Fire Code* or *International Property Maintenance Code*, or as is deemed necessary by the *building official* for the general safety and welfare of the occupants and the public.

PART 2—ADMINISTRATION AND ENFORCEMENT

SECTION 103
DEPARTMENT OF BUILDING SAFETY

[A] 103.1 Creation of enforcement agency. The Department of Building Safety is hereby created and the official in charge thereof shall be known as the *building official*.

[A] 103.2 Appointment. The *building official* shall be appointed by the chief appointing authority of the jurisdiction.

[A] 103.3 Deputies. In accordance with the prescribed procedures of this jurisdiction and with the concurrence of the appointing authority, the *building official* shall have the authority to appoint a deputy building official, the related technical officers, inspectors, plan examiners and other employees. Such employees shall have powers as delegated by the *building official*. For the maintenance of existing properties, see the *International Property Maintenance Code*.

SECTION 104
DUTIES AND POWERS OF BUILDING OFFICIAL

[A] 104.1 General. The *building official* is hereby authorized and directed to enforce the provisions of this code. The *building official* shall have the authority to render interpretations of this code and to adopt policies and procedures in order to clarify the application of its provisions. Such interpretations, policies and procedures shall be in compliance with the intent and purpose of this code. Such policies and procedures shall not have the effect of waiving requirements specifically provided for in this code.

[A] 104.2 Applications and permits. The *building official* shall receive applications, review *construction documents* and issue *permits* for the erection, and *alteration*, demolition and moving of buildings and structures, inspect the premises for which such *permits* have been issued and enforce compliance with the provisions of this code.

[A] 104.2.1 Determination of substantially improved or substantially damaged existing buildings and structures in flood hazard areas. For applications for reconstruction, rehabilitation, *repair*, *alteration*, *addition* or other improvement of existing buildings or structures located in *flood hazard areas*, the *building official* shall determine if the proposed work constitutes substantial improvement or *repair* of *substantial damage*. Where the *building official* determines that the proposed work constitutes *substantial improvement* or *repair* of *substantial damage*, and where required by this code, the *building official* shall require the building to meet the requirements of Section 1612.

[A] 104.3 Notices and orders. The *building official* shall issue necessary notices or orders to ensure compliance with this code.

[A] 104.4 Inspections. The *building official* shall make the required inspections, or the *building official* shall have the authority to accept reports of inspection by *approved agencies* or individuals. Reports of such inspections shall be in writing and be certified by a responsible officer of such *approved agency* or by the responsible individual. The *building official* is authorized to engage such expert opinion as deemed necessary to report upon unusual technical issues that arise, subject to the approval of the appointing authority.

[A] 104.5 Identification. The *building official* shall carry proper identification when inspecting structures or premises in the performance of duties under this code.

[A] 104.6 Right of entry. Where it is necessary to make an inspection to enforce the provisions of this code, or where the *building official* has reasonable cause to believe that there exists in a structure or upon a premises a condition that is contrary to or in violation of this code that makes the structure or premises unsafe, dangerous or hazardous, the *building official* is authorized to enter the structure or premises at reasonable times to inspect or to perform the duties imposed by this code, provided that if such structure or premises be occupied that credentials be presented to the occupant and entry requested. If such structure or premises is unoccupied, the *building official* shall first make a reasonable effort to locate the owner or other person having charge or control of the structure or premises and request entry. If entry is refused, the *building official* shall have recourse to the remedies provided by law to secure entry.

[A] 104.7 Department records. The *building official* shall keep official records of applications received, *permits* and certificates issued, fees collected, reports of inspections, and notices and orders issued. Such records shall be retained in the official records for the period required for retention of public records.

[A] 104.8 Liability. The *building official*, member of the board of appeals or employee charged with the enforcement of this code, while acting for the jurisdiction in good faith and without malice in the discharge of the duties required by this code or other pertinent law or ordinance, shall not thereby be civilly or criminally rendered liable personally and is hereby relieved from personal liability for any damage accruing to persons or property as a result of any act or by reason of an act or omission in the discharge of official duties.

[A] 104.8.1 Legal defense. Any suit or criminal complaint instituted against an officer or employee because of an act performed by that officer or employee in the lawful discharge of duties and under the provisions of this code shall be defended by legal representatives of the jurisdiction until the final termination of the proceedings. The *building official* or any subordinate shall not be liable for cost in any action, suit or proceeding that is instituted in pursuance of the provisions of this code.

[A] 104.9 Approved materials and equipment. Materials, equipment and devices *approved* by the *building official* shall be constructed and installed in accordance with such approval.

[A] 104.9.1 Used materials and equipment. The use of used materials that meet the requirements of this code for new materials is permitted. Used equipment and devices shall not be reused unless *approved* by the *building official*.

[A] 104.10 Modifications. Where there are practical difficulties involved in carrying out the provisions of this code, the *building official* shall have the authority to grant modifications for individual cases, upon application of the *owner* or the owner's authorized agent, provided that the *building official* shall first find that special individual reason makes the strict letter of this code impractical, the modification is in compliance with the intent and purpose of this code and that such modification does not lessen health, *accessibility*, life and fire safety or structural requirements. The details of action granting modifications shall be recorded and entered in the files of the department of building safety.

[A] 104.10.1 Flood hazard areas. The *building official* shall not grant modifications to any provision required in *flood hazard areas* as established by Section 1612.3 unless a determination has been made that:

1. A showing of good and sufficient cause that the unique characteristics of the size, configuration or topography of the site render the elevation standards of Section 1612 inappropriate.
2. A determination that failure to grant the variance would result in exceptional hardship by rendering the lot undevelopable.
3. A determination that the granting of a variance will not result in increased flood heights, additional threats to public safety, extraordinary public expense, cause fraud on or victimization of the public, or conflict with existing laws or ordinances.
4. A determination that the variance is the minimum necessary to afford relief, considering the flood hazard.
5. Submission to the applicant of written notice specifying the difference between the *design flood elevation* and the elevation to which the building is to be built, stating that the cost of flood insurance will be commensurate with the increased risk resulting from the reduced floor elevation, and stating that construction below the *design flood elevation* increases risks to life and property.

[A] 104.11 Alternative materials, design and methods of construction and equipment. The provisions of this code are not intended to prevent the installation of any material or to prohibit any design or method of construction not specifically prescribed by this code, provided that any such alternative has been *approved*. An alternative material, design or method of construction shall be *approved* where the *building official* finds that the proposed design is satisfactory and complies with the intent of the provisions of this code, and that the material, method or work offered is, for the purpose intended, not less than the equivalent of that prescribed in this code in quality, strength, effectiveness, *fire resistance*, durability and safety. Where the alternative material, design or method of construction is not *approved*, the *building official* shall respond in writing, stating the reasons why the alternative was not *approved*.

[A] 104.11.1 Research reports. Supporting data, where necessary to assist in the approval of materials or assemblies not specifically provided for in this code, shall consist of valid research reports from *approved* sources.

[A] 104.11.2 Tests. Whenever there is insufficient evidence of compliance with the provisions of this code, or evidence that a material or method does not conform to the requirements of this code, or in order to substantiate claims for alternative materials or methods, the *building official* shall have the authority to require tests as evidence of compliance to be made at no expense to the jurisdiction.

Test methods shall be as specified in this code or by other recognized test standards. In the absence of recognized and accepted test methods, the *building official* shall approve the testing procedures. Tests shall be performed by an *approved agency*. Reports of such tests shall be retained by the *building official* for the period required for retention of public records.

SECTION 105
PERMITS

[A] 105.1 Required. Any *owner* or owner's authorized agent who intends to construct, enlarge, alter, *repair*, move, demolish or change the occupancy of a building or structure, or to erect, install, enlarge, alter, *repair*, remove, convert or replace any electrical, gas, mechanical or plumbing system, the installation of which is regulated by this code, or to cause any such work to be performed, shall first make application to the *building official* and obtain the required *permit*.

[A] 105.1.1 Annual permit. Instead of an individual *permit* for each *alteration* to an already *approved* electrical, gas, mechanical or plumbing installation, the *building official* is authorized to issue an annual *permit* upon application therefor to any person, firm or corporation regularly employing one or more qualified tradepersons in the building, structure or on the premises owned or operated by the applicant for the *permit*.

[A] 105.1.2 Annual permit records. The person to whom an annual *permit* is issued shall keep a detailed record of *alterations* made under such annual *permit*. The *building official* shall have access to such records at all times or such records shall be filed with the *building official* as designated.

[A] 105.2 Work exempt from permit. Exemptions from *permit* requirements of this code shall not be deemed to grant authorization for any work to be done in any manner in violation of the provisions of this code or any other laws or ordinances of this jurisdiction. *Permits* shall not be required for the following:

Building:

1. One-story detached accessory structures used as tool and storage sheds, playhouses and similar uses, provided the floor area is not greater than 120 square feet (11 m^2).
2. Fences not over 7 feet (2134 mm) high.
3. Oil derricks.
4. Retaining walls that are not over 4 feet (1219 mm) in height measured from the bottom of the footing to the top of the wall, unless supporting a surcharge or impounding Class I, II or IIIA liquids.
5. Water tanks supported directly on grade if the capacity is not greater than 5,000 gallons (18 925 L) and the ratio of height to diameter or width is not greater than 2:1.
6. Sidewalks and driveways not more than 30 inches (762 mm) above adjacent grade, and not over any basement or *story* below and are not part of an *accessible route*.
7. Painting, papering, tiling, carpeting, cabinets, counter tops and similar finish work.
8. Temporary motion picture, television and theater stage sets and scenery.
9. Prefabricated *swimming pools* accessory to a Group R-3 occupancy that are less than 24 inches (610 mm) deep, are not greater than 5,000 gallons (18 925 L) and are installed entirely above ground.
10. Shade cloth structures constructed for nursery or agricultural purposes, not including service systems.
11. Swings and other playground equipment accessory to detached one- and two-family *dwellings*.
12. Window awnings in Group R-3 and U occupancies, supported by an exterior wall that do not project more than 54 inches (1372 mm) from the *exterior wall* and do not require additional support.
13. Nonfixed and movable fixtures, cases, racks, counters and partitions not over 5 feet 9 inches (1753 mm) in height.

Electrical:

Repairs and maintenance: Minor repair work, including the replacement of lamps or the connection of *approved* portable electrical equipment to *approved* permanently installed receptacles.

Radio and television transmitting stations: The provisions of this code shall not apply to electrical equipment used for radio and television transmissions, but do apply to equipment and wiring for a power supply and the installations of towers and antennas.

Temporary testing systems: A *permit* shall not be required for the installation of any temporary system required for the testing or servicing of electrical equipment or apparatus.

Gas:

1. Portable heating appliance.
2. Replacement of any minor part that does not alter approval of equipment or make such equipment unsafe.

Mechanical:

1. Portable heating appliance.
2. Portable ventilation equipment.
3. Portable cooling unit.
4. Steam, hot or chilled water piping within any heating or cooling equipment regulated by this code.
5. Replacement of any part that does not alter its approval or make it unsafe.
6. Portable evaporative cooler.

7. Self-contained refrigeration system containing 10 pounds (4.54 kg) or less of refrigerant and actuated by motors of 1 horsepower (0.75 kW) or less.

Plumbing:

1. The stopping of leaks in drains, water, soil, waste or vent pipe, provided, however, that if any concealed trap, drain pipe, water, soil, waste or vent pipe becomes defective and it becomes necessary to remove and replace the same with new material, such work shall be considered as new work and a *permit* shall be obtained and inspection made as provided in this code.
2. The clearing of stoppages or the repairing of leaks in pipes, valves or fixtures and the removal and reinstallation of water closets, provided such repairs do not involve or require the replacement or rearrangement of valves, pipes or fixtures.

[A] 105.2.1 Emergency repairs. Where equipment replacements and repairs must be performed in an emergency situation, the *permit* application shall be submitted within the next working business day to the *building official.*

[A] 105.2.2 Repairs. Application or notice to the *building official* is not required for ordinary *repairs* to structures, replacement of lamps or the connection of *approved* portable electrical equipment to *approved* permanently installed receptacles. Such *repairs* shall not include the cutting away of any wall, partition or portion thereof, the removal or cutting of any structural beam or load-bearing support, or the removal or change of any required *means of egress*, or rearrangement of parts of a structure affecting the egress requirements; nor shall ordinary repairs include *addition* to, *alteration* of, replacement or relocation of any standpipe, water supply, sewer, drainage, drain leader, gas, soil, waste, vent or similar piping, electric wiring or mechanical or other work affecting public health or general safety.

[A] 105.2.3 Public service agencies. A *permit* shall not be required for the installation, *alteration* or repair of generation, transmission, distribution or metering or other related equipment that is under the ownership and control of public service agencies by established right.

[A] 105.3 Application for permit. To obtain a *permit*, the applicant shall first file an application therefor in writing on a form furnished by the department of building safety for that purpose. Such application shall:

1. Identify and describe the work to be covered by the *permit* for which application is made.
2. Describe the land on which the proposed work is to be done by legal description, street address or similar description that will readily identify and definitely locate the proposed building or work.
3. Indicate the use and occupancy for which the proposed work is intended.
4. Be accompanied by *construction documents* and other information as required in Section 107.
5. State the valuation of the proposed work.
6. Be signed by the applicant, or the applicant's authorized agent.
7. Give such other data and information as required by the *building official.*

[A] 105.3.1 Action on application. The *building official* shall examine or cause to be examined applications for *permits* and amendments thereto within a reasonable time after filing. If the application or the *construction documents* do not conform to the requirements of pertinent laws, the *building official* shall reject such application in writing, stating the reasons therefor. If the *building official* is satisfied that the proposed work conforms to the requirements of this code and laws and ordinances applicable thereto, the *building official* shall issue a *permit* therefor as soon as practicable.

[A] 105.3.2 Time limitation of application. An application for a *permit* for any proposed work shall be deemed to have been abandoned 180 days after the date of filing, unless such application has been pursued in good faith or a *permit* has been issued; except that the *building official* is authorized to grant one or more extensions of time for additional periods not exceeding 90 days each. The extension shall be requested in writing and justifiable cause demonstrated.

[A] 105.4 Validity of permit. The issuance or granting of a *permit* shall not be construed to be a *permit* for, or an approval of, any violation of any of the provisions of this code or of any other ordinance of the jurisdiction. *Permits* presuming to give authority to violate or cancel the provisions of this code or other ordinances of the jurisdiction shall not be valid. The issuance of a *permit* based on *construction documents* and other data shall not prevent the *building official* from requiring the correction of errors in the *construction documents* and other data. The *building official* is authorized to prevent occupancy or use of a structure where in violation of this code or of any other ordinances of this jurisdiction.

[A] 105.5 Expiration. Every *permit* issued shall become invalid unless the work on the site authorized by such *permit* is commenced within 180 days after its issuance, or if the work authorized on the site by such *permit* is suspended or abandoned for a period of 180 days after the time the work is commenced. The *building official* is authorized to grant, in writing, one or more extensions of time, for periods not more than 180 days each. The extension shall be requested in writing and justifiable cause demonstrated.

[A] 105.6 Suspension or revocation. The *building official* is authorized to suspend or revoke a *permit* issued under the provisions of this code wherever the *permit* is issued in error or on the basis of incorrect, inaccurate or incomplete information, or in violation of any ordinance or regulation or any of the provisions of this code.

[A] 105.7 Placement of permit. The building *permit* or copy shall be kept on the site of the work until the completion of the project.

SECTION 106
FLOOR AND ROOF DESIGN LOADS

[A] 106.1 Live loads posted. In commercial or industrial buildings, for each floor or portion thereof designed for *live loads* exceeding 50 psf (2.40 kN/m^2), such design *live loads* shall be conspicuously posted by the owner or the owner's authorized agent in that part of each *story* in which they apply, using durable signs. It shall be unlawful to remove or deface such notices.

[A] 106.2 Issuance of certificate of occupancy. A certificate of occupancy required by Section 111 shall not be issued until the floor load signs, required by Section 106.1, have been installed.

[A] 106.3 Restrictions on loading. It shall be unlawful to place, or cause or permit to be placed, on any floor or roof of a building, structure or portion thereof, a load greater than is permitted by this code.

SECTION 107
SUBMITTAL DOCUMENTS

[A] 107.1 General. Submittal documents consisting of *construction documents*, statement of *special inspections*, geotechnical report and other data shall be submitted in two or more sets with each *permit* application. The *construction documents* shall be prepared by a *registered design professional* where required by the statutes of the jurisdiction in which the project is to be constructed. Where special conditions exist, the *building official* is authorized to require additional *construction documents* to be prepared by a *registered design professional.*

Exception: The *building official* is authorized to waive the submission of *construction documents* and other data not required to be prepared by a *registered design professional* if it is found that the nature of the work applied for is such that review of *construction documents* is not necessary to obtain compliance with this code.

[A] 107.2 Construction documents. *Construction documents* shall be in accordance with Sections 107.2.1 through 107.2.6.

[A] 107.2.1 Information on construction documents. *Construction documents* shall be dimensioned and drawn upon suitable material. Electronic media documents are permitted to be submitted where *approved* by the *building official. Construction documents* shall be of sufficient clarity to indicate the location, nature and extent of the work proposed and show in detail that it will conform to the provisions of this code and relevant laws, ordinances, rules and regulations, as determined by the *building official.*

[A] 107.2.2 Fire protection system shop drawings. Shop drawings for the *fire protection system(s)* shall be submitted to indicate conformance to this code and the *construction documents* and shall be *approved* prior to the start of system installation. Shop drawings shall contain all information as required by the referenced installation standards in Chapter 9.

[A] 107.2.3 Means of egress. The *construction documents* shall show in sufficient detail the location, construction, size and character of all portions of the *means of egress* including the path of the *exit discharge* to the *public way* in compliance with the provisions of this code. In other than occupancies in Groups R-2, R-3, and I-1, the *construction documents* shall designate the number of occupants to be accommodated on every floor, and in all rooms and spaces.

[A] 107.2.4 Exterior wall envelope. *Construction documents* for all buildings shall describe the *exterior wall envelope* in sufficient detail to determine compliance with this code. The *construction documents* shall provide details of the *exterior wall envelope* as required, including flashing, intersections with dissimilar materials, corners, end details, control joints, intersections at roof, eaves or parapets, means of drainage, water-resistive membrane and details around openings.

The *construction documents* shall include manufacturer's installation instructions that provide supporting documentation that the proposed penetration and opening details described in the *construction documents* maintain the weather resistance of the *exterior wall envelope.* The supporting documentation shall fully describe the *exterior wall* system that was tested, where applicable, as well as the test procedure used.

[A] 107.2.5 Site plan. The *construction documents* submitted with the application for *permit* shall be accompanied by a site plan showing to scale the size and location of new construction and existing structures on the site, distances from *lot lines*, the established street grades and the proposed finished grades and, as applicable, *flood hazard areas, floodways*, and *design flood elevations*; and it shall be drawn in accordance with an accurate boundary line survey. In the case of demolition, the site plan shall show construction to be demolished and the location and size of existing structures and construction that are to remain on the site or plot. The *building official* is authorized to waive or modify the requirement for a site plan where the application for *permit* is for *alteration* or *repair* or where otherwise warranted.

[A] 107.2.5.1 Design flood elevations. Where *design flood elevations* are not specified, they shall be established in accordance with Section 1612.3.1.

[A] 107.2.6 Structural information. The *construction documents* shall provide the information specified in Section 1603.

[A] 107.3 Examination of documents. The *building official* shall examine or cause to be examined the accompanying submittal documents and shall ascertain by such examinations whether the construction indicated and described is in accordance with the requirements of this code and other pertinent laws or ordinances.

[A] 107.3.1 Approval of construction documents. When the *building official* issues a *permit*, the *construction documents* shall be *approved*, in writing or by stamp, as "Reviewed for Code Compliance." One set of *construction documents* so reviewed shall be retained by the *build-*

ing official. The other set shall be returned to the applicant, shall be kept at the site of work and shall be open to inspection by the *building official* or a duly authorized representative.

[A] 107.3.2 Previous approvals. This code shall not require changes in the *construction documents*, construction or designated occupancy of a structure for which a lawful *permit* has been heretofore issued or otherwise lawfully authorized, and the construction of which has been pursued in good faith within 180 days after the effective date of this code and has not been abandoned.

[A] 107.3.3 Phased approval. The *building official* is authorized to issue a *permit* for the construction of foundations or any other part of a building or structure before the *construction documents* for the whole building or structure have been submitted, provided that adequate information and detailed statements have been filed complying with pertinent requirements of this code. The holder of such *permit* for the foundation or other parts of a building or structure shall proceed at the holder's own risk with the building operation and without assurance that a *permit* for the entire structure will be granted.

[A] 107.3.4 Design professional in responsible charge. Where it is required that documents be prepared by a *registered design professional*, the *building official* shall be authorized to require the *owner* or the owner's authorized agent to engage and designate on the building *permit* application a *registered design professional* who shall act as the *registered design professional in responsible charge*. If the circumstances require, the *owner* or the owner's authorized agent shall designate a substitute *registered design professional in responsible charge* who shall perform the duties required of the original *registered design professional in responsible charge*. The *building official* shall be notified in writing by the *owner* or the owner's authorized agent if the *registered design professional in responsible charge* is changed or is unable to continue to perform the duties.

The *registered design professional in responsible charge* shall be responsible for reviewing and coordinating submittal documents prepared by others, including phased and deferred submittal items, for compatibility with the design of the building.

[A] 107.3.4.1 Deferred submittals. Deferral of any submittal items shall have the prior approval of the *building official*. The *registered design professional in responsible charge* shall list the deferred submittals on the *construction documents* for review by the *building official*.

Documents for deferred submittal items shall be submitted to the *registered design professional in responsible charge* who shall review them and forward them to the *building official* with a notation indicating that the deferred submittal documents have been reviewed and found to be in general conformance to the design of the building. The deferred submittal items shall not be installed until the deferred submittal documents have been *approved* by the *building official*.

[A] 107.4 Amended construction documents. Work shall be installed in accordance with the *approved construction documents*, and any changes made during construction that are not in compliance with the *approved construction documents* shall be resubmitted for approval as an amended set of *construction documents*.

[A] 107.5 Retention of construction documents. One set of *approved construction documents* shall be retained by the *building official* for a period of not less than 180 days from date of completion of the permitted work, or as required by state or local laws.

SECTION 108
TEMPORARY STRUCTURES AND USES

[A] 108.1 General. The *building official* is authorized to issue a *permit* for temporary structures and temporary uses. Such *permits* shall be limited as to time of service, but shall not be permitted for more than 180 days. The *building official* is authorized to grant extensions for demonstrated cause.

[A] 108.2 Conformance. Temporary structures and uses shall comply with the requirements in Section 3103.

[A] 108.3 Temporary power. The *building official* is authorized to give permission to temporarily supply and use power in part of an electric installation before such installation has been fully completed and the final certificate of completion has been issued. The part covered by the temporary certificate shall comply with the requirements specified for temporary lighting, heat or power in NFPA 70.

[A] 108.4 Termination of approval. The *building official* is authorized to terminate such *permit* for a temporary structure or use and to order the temporary structure or use to be discontinued.

SECTION 109
FEES

[A] 109.1 Payment of fees. A *permit* shall not be valid until the fees prescribed by law have been paid, nor shall an amendment to a *permit* be released until the additional fee, if any, has been paid.

[A] 109.2 Schedule of permit fees. On buildings, structures, electrical, gas, mechanical, and plumbing systems or *alterations* requiring a *permit*, a fee for each *permit* shall be paid as required, in accordance with the schedule as established by the applicable governing authority.

[A] 109.3 Building permit valuations. The applicant for a *permit* shall provide an estimated *permit* value at time of application. *Permit* valuations shall include total value of work, including materials and labor, for which the *permit* is being issued, such as electrical, gas, mechanical, plumbing equipment and permanent systems. If, in the opinion of the *building official*, the valuation is underestimated on the application, the *permit* shall be denied, unless the applicant can show detailed estimates to meet the approval of the *building official*. Final building *permit* valuation shall be set by the *building official*.

[A] 109.4 Work commencing before permit issuance. Any person who commences any work on a building, structure, electrical, gas, mechanical or plumbing system before obtaining the necessary *permits* shall be subject to a fee established by the *building official* that shall be in addition to the required *permit* fees.

[A] 109.5 Related fees. The payment of the fee for the construction, *alteration*, removal or demolition for work done in connection to or concurrently with the work authorized by a building *permit* shall not relieve the applicant or holder of the *permit* from the payment of other fees that are prescribed by law.

[A] 109.6 Refunds. The *building official* is authorized to establish a refund policy.

SECTION 110 INSPECTIONS

[A] 110.1 General. Construction or work for which a *permit* is required shall be subject to inspection by the *building official* and such construction or work shall remain accessible and exposed for inspection purposes until *approved*. Approval as a result of an inspection shall not be construed to be an approval of a violation of the provisions of this code or of other ordinances of the jurisdiction. Inspections presuming to give authority to violate or cancel the provisions of this code or of other ordinances of the jurisdiction shall not be valid. It shall be the duty of the *owner* or the owner's authorized agent to cause the work to remain accessible and exposed for inspection purposes. Neither the *building official* nor the jurisdiction shall be liable for expense entailed in the removal or replacement of any material required to allow inspection.

[A] 110.2 Preliminary inspection. Before issuing a *permit*, the *building official* is authorized to examine or cause to be examined buildings, structures and sites for which an application has been filed.

[A] 110.3 Required inspections. The *building official*, upon notification, shall make the inspections set forth in Sections 110.3.1 through 110.3.10.

[A] 110.3.1 Footing and foundation inspection. Footing and foundation inspections shall be made after excavations for footings are complete and any required reinforcing steel is in place. For concrete foundations, any required forms shall be in place prior to inspection. Materials for the foundation shall be on the job, except where concrete is ready mixed in accordance with ASTM C 94, the concrete need not be on the job.

[A] 110.3.2 Concrete slab and under-floor inspection. Concrete slab and under-floor inspections shall be made after in-slab or under-floor reinforcing steel and building service equipment, conduit, piping accessories and other ancillary equipment items are in place, but before any concrete is placed or floor sheathing installed, including the subfloor.

[A] 110.3.3 Lowest floor elevation. In *flood hazard areas*, upon placement of the lowest floor, including the *basement*, and prior to further vertical construction, the elevation certification required in Section 1612.5 shall be submitted to the *building official*.

[A] 110.3.4 Frame inspection. Framing inspections shall be made after the roof deck or sheathing, all framing, *fireblocking* and bracing are in place and pipes, chimneys and vents to be concealed are complete and the rough electrical, plumbing, heating wires, pipes and ducts are *approved*.

[A] 110.3.5 Lath, gypsum board and gypsum panel product inspection. Lath, gypsum board and gypsum panel product inspections shall be made after lathing, gypsum board and gypsum panel products, interior and exterior, are in place, but before any plastering is applied or gypsum board and gypsum panel product joints and fasteners are taped and finished.

Exception: Gypsum board and gypsum panel products that are not part of a fire-resistance-rated assembly or a shear assembly.

[A] 110.3.6 Fire- and smoke-resistant penetrations. Protection of joints and penetrations in *fire-resistance-rated* assemblies, *smoke barriers* and smoke partitions shall not be concealed from view until inspected and *approved*.

[A] 110.3.7 Energy efficiency inspections. Inspections shall be made to determine compliance with Chapter 13 and shall include, but not be limited to, inspections for: envelope insulation R- and U-values, fenestration U-value, duct system R-value, and HVAC and water-heating equipment efficiency.

[A] 110.3.8 Other inspections. In addition to the inspections specified in Sections 110.3.1 through 110.3.7, the *building official* is authorized to make or require other inspections of any construction work to ascertain compliance with the provisions of this code and other laws that are enforced by the department of building safety.

[A] 110.3.9 Special inspections. For *special inspections*, see Chapter 17.

[A] 110.3.10 Final inspection. The final inspection shall be made after all work required by the building *permit* is completed.

[A] 110.3.10.1 Flood hazard documentation. If located in a *flood hazard area*, documentation of the elevation of the lowest floor as required in Section 1612.5 shall be submitted to the *building official* prior to the final inspection.

[A] 110.4 Inspection agencies. The *building official* is authorized to accept reports of *approved* inspection agencies, provided such agencies satisfy the requirements as to qualifications and reliability.

[A] 110.5 Inspection requests. It shall be the duty of the holder of the building *permit* or their duly authorized agent to notify the *building official* when work is ready for inspection. It shall be the duty of the *permit* holder to provide access to and means for inspections of such work that are required by this code.

[A] 110.6 Approval required. Work shall not be done beyond the point indicated in each successive inspection without first obtaining the approval of the *building official*. The *building official*, upon notification, shall make the requested inspections and shall either indicate the portion of the construction that is satisfactory as completed, or notify the *permit* holder or his or her agent wherein the same fails to comply with this code. Any portions that do not comply shall be corrected and such portion shall not be covered or concealed until authorized by the *building official*.

SECTION 111
CERTIFICATE OF OCCUPANCY

[A] 111.1 Use and occupancy. A building or structure shall not be used or occupied, and a change in the existing use or occupancy classification of a building or structure or portion thereof shall not be made, until the *building official* has issued a certificate of occupancy therefor as provided herein. Issuance of a certificate of occupancy shall not be construed as an approval of a violation of the provisions of this code or of other ordinances of the jurisdiction.

Exception: Certificates of occupancy are not required for work exempt from *permits* in accordance with Section 105.2.

[A] 111.2 Certificate issued. After the *building official* inspects the building or structure and does not find violations of the provisions of this code or other laws that are enforced by the department of building safety, the *building official* shall issue a certificate of occupancy that contains the following:

1. The building *permit* number.
2. The address of the structure.
3. The name and address of the *owner* or the owner's authorized agent.
4. A description of that portion of the structure for which the certificate is issued.
5. A statement that the described portion of the structure has been inspected for compliance with the requirements of this code for the occupancy and division of occupancy and the use for which the proposed occupancy is classified.
6. The name of the *building official*.
7. The edition of the code under which the *permit* was issued.
8. The use and occupancy, in accordance with the provisions of Chapter 3.
9. The type of construction as defined in Chapter 6.
10. The design *occupant load*.
11. If an *automatic sprinkler system* is provided, whether the sprinkler system is required.
12. Any special stipulations and conditions of the building *permit*.

[A] 111.3 Temporary occupancy. The *building official* is authorized to issue a temporary certificate of occupancy before the completion of the entire work covered by the *permit*, provided that such portion or portions shall be occupied safely. The *building official* shall set a time period during which the temporary certificate of occupancy is valid.

[A] 111.4 Revocation. The *building official* is authorized to, in writing, suspend or revoke a certificate of occupancy or completion issued under the provisions of this code wherever the certificate is issued in error, or on the basis of incorrect information supplied, or where it is determined that the building or structure or portion thereof is in violation of any ordinance or regulation or any of the provisions of this code.

SECTION 112
SERVICE UTILITIES

[A] 112.1 Connection of service utilities. A person shall not make connections from a utility, source of energy, fuel or power to any building or system that is regulated by this code for which a *permit* is required, until released by the *building official*.

[A] 112.2 Temporary connection. The *building official* shall have the authority to authorize the temporary connection of the building or system to the utility, source of energy, fuel or power.

[A] 112.3 Authority to disconnect service utilities. The *building official* shall have the authority to authorize disconnection of utility service to the building, structure or system regulated by this code and the referenced codes and standards set forth in Section 101.4 in case of emergency where necessary to eliminate an immediate hazard to life or property or where such utility connection has been made without the approval required by Section 112.1 or 112.2. The *building official* shall notify the serving utility, and wherever possible the *owner* and occupant of the building, structure or service system of the decision to disconnect prior to taking such action. If not notified prior to disconnecting, the *owner* or occupant of the building, structure or service system shall be notified in writing, as soon as practical thereafter.

SECTION 113
BOARD OF APPEALS

[A] 113.1 General. In order to hear and decide appeals of orders, decisions or determinations made by the *building official* relative to the application and interpretation of this code, there shall be and is hereby created a board of appeals. The board of appeals shall be appointed by the applicable governing authority and shall hold office at its pleasure. The board shall adopt rules of procedure for conducting its business.

[A] 113.2 Limitations on authority. An application for appeal shall be based on a claim that the true intent of this code or the rules legally adopted thereunder have been incorrectly interpreted, the provisions of this code do not fully apply or an equally good or better form of construction is proposed. The board shall not have authority to waive requirements of this code.

[A] 113.3 Qualifications. The board of appeals shall consist of members who are qualified by experience and training to

pass on matters pertaining to building construction and are not employees of the jurisdiction.

SECTION 114
VIOLATIONS

[A] 114.1 Unlawful acts. It shall be unlawful for any person, firm or corporation to erect, construct, alter, extend, *repair*, move, remove, demolish or occupy any building, structure or equipment regulated by this code, or cause same to be done, in conflict with or in violation of any of the provisions of this code.

[A] 114.2 Notice of violation. The *building official* is authorized to serve a notice of violation or order on the person responsible for the erection, construction, *alteration*, extension, *repair*, moving, removal, demolition or occupancy of a building or structure in violation of the provisions of this code, or in violation of a *permit* or certificate issued under the provisions of this code. Such order shall direct the discontinuance of the illegal action or condition and the abatement of the violation.

[A] 114.3 Prosecution of violation. If the notice of violation is not complied with promptly, the *building official* is authorized to request the legal counsel of the jurisdiction to institute the appropriate proceeding at law or in equity to restrain, correct or abate such violation, or to require the removal or termination of the unlawful occupancy of the building or structure in violation of the provisions of this code or of the order or direction made pursuant thereto.

[A] 114.4 Violation penalties. Any person who violates a provision of this code or fails to comply with any of the requirements thereof or who erects, constructs, alters or repairs a building or structure in violation of the *approved construction documents* or directive of the *building official*, or of a *permit* or certificate issued under the provisions of this code, shall be subject to penalties as prescribed by law.

SECTION 115
STOP WORK ORDER

[A] 115.1 Authority. Where the *building official* finds any work regulated by this code being performed in a manner either contrary to the provisions of this code or dangerous or unsafe, the *building official* is authorized to issue a stop work order.

[A] 115.2 Issuance. The stop work order shall be in writing and shall be given to the *owner* of the property involved, the owner's authorized agent or the person performing the work. Upon issuance of a stop work order, the cited work shall immediately cease. The stop work order shall state the reason for the order and the conditions under which the cited work will be permitted to resume.

[A] 115.3 Unlawful continuance. Any person who shall continue any work after having been served with a stop work order, except such work as that person is directed to perform to remove a violation or unsafe condition, shall be subject to penalties as prescribed by law.

SECTION 116
UNSAFE STRUCTURES AND EQUIPMENT

[A] 116.1 Conditions. Structures or existing equipment that are or hereafter become unsafe, insanitary or deficient because of inadequate *means of egress* facilities, inadequate light and ventilation, or that constitute a fire hazard, or are otherwise dangerous to human life or the public welfare, or that involve illegal or improper occupancy or inadequate maintenance, shall be deemed an unsafe condition. Unsafe structures shall be taken down and removed or made safe, as the *building official* deems necessary and as provided for in this section. A vacant structure that is not secured against entry shall be deemed unsafe.

[A] 116.2 Record. The *building official* shall cause a report to be filed on an unsafe condition. The report shall state the occupancy of the structure and the nature of the unsafe condition.

[A] 116.3 Notice. If an unsafe condition is found, the *building official* shall serve on the *owner*, agent or person in control of the structure, a written notice that describes the condition deemed unsafe and specifies the required repairs or improvements to be made to abate the unsafe condition, or that requires the unsafe structure to be demolished within a stipulated time. Such notice shall require the person thus notified to declare immediately to the *building official* acceptance or rejection of the terms of the order.

[A] 116.4 Method of service. Such notice shall be deemed properly served if a copy thereof is (a) delivered to the *owner* personally; (b) sent by certified or registered mail addressed to the *owner* at the last known address with the return receipt requested; or (c) delivered in any other manner as prescribed by local law. If the certified or registered letter is returned showing that the letter was not delivered, a copy thereof shall be posted in a conspicuous place in or about the structure affected by such notice. Service of such notice in the foregoing manner upon the owner's agent or upon the person responsible for the structure shall constitute service of notice upon the *owner*.

[A] 116.5 Restoration. Where the structure or equipment determined to be unsafe by the *building official* is restored to a safe condition, to the extent that repairs, *alterations* or *additions* are made or a change of occupancy occurs during the restoration of the structure, such *repairs*, *alterations*, *additions* and change of occupancy shall comply with the requirements of Section 105.2.2 and the *International Existing Building Code*.

CHAPTER 2

DEFINITIONS

User note: Code change proposals to sections preceded by the designation [A], [BS] or [F] will be considered by one of the code development committees meeting during the 2016 (Group B) Code Development Cycle. See explanation on page iv.

SECTION 201
GENERAL

201.1 Scope. Unless otherwise expressly stated, the following words and terms shall, for the purposes of this code, have the meanings shown in this chapter.

201.2 Interchangeability. Words used in the present tense include the future; words stated in the masculine gender include the feminine and neuter; the singular number includes the plural and the plural, the singular.

201.3 Terms defined in other codes. Where terms are not defined in this code and are defined in the *International Energy Conservation Code*, *International Fuel Gas Code*, *International Fire Code*, *International Mechanical Code* or *International Plumbing Code,* such terms shall have the meanings ascribed to them as in those codes.

201.4 Terms not defined. Where terms are not defined through the methods authorized by this section, such terms shall have ordinarily accepted meanings such as the context implies.

SECTION 202
DEFINITIONS

24-HOUR BASIS. The actual time that a person is an occupant within a facility for the purpose of receiving care. It shall not include a facility that is open for 24 hours and is capable of providing care to someone visiting the facility during any segment of the 24 hours.

[BS] AAC MASONRY. *Masonry* made of autoclaved aerated concrete (AAC) units, manufactured without internal reinforcement and bonded together using thin- or thick-bed *mortar*.

ACCESSIBLE. A *site*, *building*, *facility* or portion thereof that complies with Chapter 11.

ACCESSIBLE MEANS OF EGRESS. A continuous and unobstructed way of egress travel from any *accessible* point in a *building* or *facility* to a *public way*.

ACCESSIBLE ROUTE. A continuous, unobstructed path that complies with Chapter 11.

ACCESSIBLE UNIT. A *dwelling unit* or *sleeping unit* that complies with this code and the provisions for Accessible units in ICC A117.1.

ACCREDITATION BODY. An *approved*, third-party organization that is independent of the grading and inspection agencies, and the lumber mills, and that initially accredits and subsequently monitors, on a continuing basis, the competency and performance of a grading or inspection agency related to carrying out specific tasks.

[A] ADDITION. An extension or increase in floor area or height of a building or structure.

[BS] ADHERED MASONRY VENEER. *Veneer* secured and supported through the adhesion of an *approved* bonding material applied to an *approved backing*.

[BS] ADOBE CONSTRUCTION. Construction in which the exterior *load-bearing* and *nonload-bearing walls* and partitions are of unfired clay *masonry units*, and floors, roofs and interior framing are wholly or partly of wood or other *approved* materials.

Adobe, stabilized. Unfired clay *masonry units* to which admixtures, such as emulsified asphalt, are added during the manufacturing process to limit the units' water absorption so as to increase their durability.

Adobe, unstabilized. Unfired clay *masonry units* that do not meet the definition of "Adobe, stabilized."

[F] AEROSOL. A product that is dispensed from an *aerosol container* by a propellant. Aerosol products shall be classified by means of the calculation of their chemical heats of combustion and shall be designated Level 1, Level 2 or Level 3.

Level 1 aerosol products. Those with a total chemical heat of combustion that is less than or equal to 8,600 British thermal units per pound (Btu/lb) (20 kJ/g).

Level 2 aerosol products. Those with a total chemical heat of combustion that is greater than 8,600 Btu/lb (20 kJ/g), but less than or equal to 13,000 Btu/lb (30 kJ/g).

Level 3 aerosol products. Those with a total chemical heat of combustion that is greater than 13,000 Btu/lb (30 kJ/g).

[F] AEROSOL CONTAINER. A metal can or a glass or plastic bottle designed to dispense an aerosol.

[BS] AGGREGATE. In roofing, crushed stone, crushed slag or water-worn gravel used for surfacing for *roof coverings*.

AGRICULTURAL BUILDING. A structure designed and constructed to house farm implements, hay, grain, poultry, livestock or other horticultural products. This structure shall not be a place of human habitation or a place of employment where agricultural products are processed, treated or packaged, nor shall it be a place used by the public.

AIR-IMPERMEABLE INSULATION. An insulation having an air permeance equal to or less than 0.02 l/s × m^2 at 75 pa pressure differential tested in accordance with ASTM E 2178 or ASTM E 283.

AIR-INFLATED STRUCTURE. A structure that uses air-pressurized membrane beams, arches or other elements to enclose space. Occupants of such a structure do not occupy the pressurized area used to support the structure.

AIR-SUPPORTED STRUCTURE. A structure wherein the shape of the structure is attained by air pressure and occupants of the structure are within the elevated pressure area. Air-supported structures are of two basic types:

Double skin. Similar to a single skin, but with an attached liner that is separated from the outer skin and provides an airspace which serves for insulation, acoustic, aesthetic or similar purposes.

Single skin. Where there is only the single outer skin and the air pressure is directly against that skin.

AISLE. An unenclosed *exit access* component that defines and provides a path of egress travel.

AISLE ACCESSWAY. That portion of an *exit access* that leads to an *aisle*.

[F] ALARM NOTIFICATION APPLIANCE. A *fire alarm system* component such as a bell, horn, speaker, light or text display that provides audible, tactile or visible outputs, or any combination thereof.

[F] ALARM SIGNAL. A signal indicating an emergency requiring immediate action, such as a signal indicative of fire.

[F] ALARM VERIFICATION FEATURE. A feature of *automatic* fire detection and alarm systems to reduce unwanted alarms wherein *smoke detectors* report alarm conditions for a minimum period of time, or confirm alarm conditions within a given time period, after being *automatically* reset, in order to be accepted as a valid alarm-initiation signal.

ALLOWABLE STRESS DESIGN. A method of proportioning structural members, such that elastically computed stresses produced in the members by *nominal loads* do not exceed *specified* allowable stresses (also called "working stress design").

[A] ALTERATION. Any construction or renovation to an *existing structure* other than *repair* or *addition*.

ALTERNATING TREAD DEVICE. A device that has a series of steps between 50 and 70 degrees (0.87 and 1.22 rad) from horizontal, usually attached to a center support rail in an alternating manner so that the user does not have both feet on the same level at the same time.

AMBULATORY CARE FACILITY. Buildings or portions thereof used to provide medical, surgical, psychiatric, nursing or similar care on a less than 24-hour basis to individuals who are rendered *incapable of self-preservation* by the services provided.

ANCHOR BUILDING. An exterior perimeter building of a group other than H having direct access to a *covered or open mall building* but having required *means of egress* independent of the mall.

[BS] ANCHORED MASONRY VENEER. *Veneer* secured with *approved* mechanical fasteners to an *approved backing*.

ANNULAR SPACE. The opening around the penetrating item.

[F] ANNUNCIATOR. A unit containing one or more indicator lamps, alphanumeric displays or other equivalent means in which each indication provides status information about a circuit, condition or location.

[A] APPROVED. Acceptable to the *building official*.

[A] APPROVED AGENCY. An established and recognized agency that is regularly engaged in conducting tests or furnishing inspection services, where such agency has been *approved* by the *building official*.

[BS] APPROVED FABRICATOR. An established and qualified person, firm or corporation *approved* by the *building official* pursuant to Chapter 17 of this code.

[A] APPROVED SOURCE. An independent person, firm or corporation, *approved* by the *building official*, who is competent and experienced in the application of engineering principles to materials, methods or systems analyses.

[BS] AREA (for masonry).

Gross cross-sectional. The *area* delineated by the out-to-out *specified* dimensions of *masonry* in the plane under consideration.

Net cross-sectional. The *area* of *masonry units*, grout and *mortar* crossed by the plane under consideration based on out-to-out *specified* dimensions.

AREA, BUILDING. The area included within surrounding *exterior walls* (or *exterior walls* and *fire walls*) exclusive of vent *shafts* and *courts*. Areas of the building not provided with surrounding walls shall be included in the building area if such areas are included within the horizontal projection of the roof or floor above.

AREA OF REFUGE. An area where persons unable to use *stairways* can remain temporarily to await instructions or assistance during emergency evacuation.

AREA OF SPORT ACTIVITY. That portion of an indoor or outdoor space where the play or practice of a sport occurs.

AREAWAY. A subsurface space adjacent to a building open at the top or protected at the top by a grating or *guard*.

ASSEMBLY SEATING, MULTILEVEL. See "Multilevel assembly seating."

ATRIUM. An opening connecting two or more *stories* other than enclosed *stairways*, elevators, hoistways, escalators, plumbing, electrical, air-conditioning or other equipment, which is closed at the top and not defined as a mall. *Stories*, as used in this definition, do not include balconies within assembly groups or *mezzanines* that comply with Section 505.

ATTIC. The space between the ceiling beams of the top *story* and the roof rafters.

[F] AUDIBLE ALARM NOTIFICATION APPLIANCE. A notification appliance that alerts by the sense of hearing.

AUTOCLAVED AERATED CONCRETE (AAC). Low density cementitious product of calcium silicate hydrates, whose material specifications are defined in ASTM C 1386.

[F] AUTOMATIC. As applied to fire protection devices, a device or system providing an emergency function without the necessity for human intervention and activated as a result of a predetermined temperature rise, rate of temperature rise or combustion products.

[F] AUTOMATIC FIRE-EXTINGUISHING SYSTEM. An *approved* system of devices and equipment which *automatically* detects a fire and discharges an *approved* fire-extinguishing agent onto or in the area of a fire.

[F] AUTOMATIC SMOKE DETECTION SYSTEM. A *fire alarm system* that has initiation devices that utilize *smoke detectors* for protection of an area such as a room or space with detectors to provide early warning of fire.

[F] AUTOMATIC SPRINKLER SYSTEM. An *automatic sprinkler system*, for fire protection purposes, is an integrated system of underground and overhead piping designed in accordance with fire protection engineering standards. The system includes a suitable water supply. The portion of the system above the ground is a network of specially sized or hydraulically designed piping installed in a structure or area, generally overhead, and to which *automatic* sprinklers are connected in a systematic pattern. The system is usually activated by heat from a fire and discharges water over the fire area.

[F] AVERAGE AMBIENT SOUND LEVEL. The root mean square, A-weighted sound pressure level measured over a 24-hour period, or the time any person is present, whichever time period is less.

AWNING. An architectural projection that provides weather protection, identity or decoration and is partially or wholly supported by the building to which it is attached. An awning is comprised of a lightweight *frame structure* over which a covering is attached.

BACKING. The wall or surface to which the *veneer* is secured.

BALANCED DOOR. A door equipped with double-pivoted hardware so designed as to cause a semicounterbalanced swing action when opening.

[F] BALED COTTON. A natural seed fiber wrapped in and secured with industry accepted materials, usually consisting of burlap, woven polypropylene, polyethylene or cotton or sheet polyethylene, and secured with steel, synthetic or wire bands or wire; also includes linters (lint removed from the cottonseed) and motes (residual materials from the ginning process).

[F] BALED COTTON, DENSELY PACKED. Cotton made into banded bales with a packing density of not less than 22 pounds per cubic foot (360 kg/m^3), and dimensions complying with the following: a length of 55 inches (1397 mm), a width of 21 inches (533.4 mm) and a height of 27.6 to 35.4 inches (701 to 899 mm).

[BS] BALLAST. In roofing, ballast comes in the form of large stones or paver systems or light-weight interlocking paver systems and is used to provide uplift resistance for roofing systems that are not adhered or mechanically attached to the *roof deck*.

[F] BARRICADE. A structure that consists of a combination of walls, floor and roof, which is designed to withstand the rapid release of energy in an *explosion* and which is fully confined, partially vented or fully vented; or other effective method of shielding from explosive materials by a natural or artificial barrier.

Artificial barricade. An artificial mound or revetment a minimum thickness of 3 feet (914 mm).

Natural barricade. Natural features of the ground, such as hills, or timber of sufficient density that the surrounding exposures that require protection cannot be seen from the magazine or building containing explosives when the trees are bare of leaves.

[BS] BASE FLOOD. The *flood* having a 1-percent chance of being equaled or exceeded in any given year.

[BS] BASE FLOOD ELEVATION. The elevation of the *base flood*, including wave height, relative to the National Geodetic Vertical Datum (NGVD), North American Vertical Datum (NAVD) or other datum specified on the *Flood Insurance Rate Map* (FIRM).

[BS] BASEMENT (for flood loads). The portion of a building having its floor subgrade (below ground level) on all sides. This definition of "Basement" is limited in application to the provisions of Section 1612.

BASEMENT. A *story* that is not a *story above grade plane* (see "*Story above grade plane*"). This definition of "Basement" does not apply to the provisions of Section 1612 for flood *loads*.

BEARING WALL STRUCTURE. A building or other structure in which vertical *loads* from floors and roofs are primarily supported by walls.

[BS] BED JOINT. The horizontal layer of *mortar* on which a *masonry unit* is laid.

BLEACHERS. Tiered seating supported on a dedicated structural system and two or more rows high and is not a building element (see "*Grandstand*").

BOARDING HOUSE. A building arranged or used for lodging for compensation, with or without meals, and not occupied as a single-family unit.

[F] BOILING POINT. The temperature at which the vapor pressure of a *liquid* equals the atmospheric pressure of 14.7 pounds per square inch (psia) (101 kPa) or 760 mm of mercury. Where an accurate boiling point is unavailable for the material in question, or for mixtures which do not have a constant boiling point, for the purposes of this classification, the 20-percent evaporated point of a distillation performed in accordance with ASTM D 86 shall be used as the boiling point of the *liquid*.

[BS] BRACED WALL LINE. A straight line through the building plan that represents the location of the lateral resistance provided by the wall bracing.

[BS] BRACED WALL PANEL. A full-height section of wall constructed to resist in-plane shear loads through interaction of framing members, sheathing material and anchors. The panel's length meets the requirements of its particular

bracing method and contributes toward the total amount of bracing required along its *braced wall line*.

BREAKOUT. For revolving doors, a process whereby wings or door panels can be pushed open manually for *means of egress* travel.

[BS] BRICK.

Calcium silicate (sand lime brick). A pressed and subsequently autoclaved unit that consists of sand and lime, with or without the inclusion of other materials.

Clay or shale. A solid or hollow *masonry unit* of clay or shale, usually formed into a rectangular *prism*, then burned or fired in a kiln; brick is a ceramic product.

Concrete. A concrete *masonry unit* made from Portland cement, water, and suitable aggregates, with or without the inclusion of other materials.

[A] BUILDING. Any structure used or intended for supporting or sheltering any use or occupancy.

BUILDING AREA. See "Area, building."

BUILDING ELEMENT. A fundamental component of building construction, listed in Table 601, which may or may not be of fire-resistance-rated construction and is constructed of materials based on the building type of construction.

BUILDING HEIGHT. See "Height, building."

BUILDING-INTEGRATED PHOTOVOLTAIC (BIPV) PRODUCT. A building product that incorporates photovoltaic modules and functions as a component of the building envelope.

BUILDING LINE. The line established by law, beyond which a building shall not extend, except as specifically provided by law.

[A] BUILDING OFFICIAL. The officer or other designated authority charged with the administration and enforcement of this code, or a duly authorized representative.

[BS] BUILT-UP ROOF COVERING. Two or more layers of felt cemented together and surfaced with a cap sheet, mineral *aggregate*, smooth coating or similar surfacing material.

CABLE-RESTRAINED, AIR-SUPPORTED STRUCTURE. A structure in which the uplift is resisted by cables or webbings which are anchored to either foundations or dead men. Reinforcing cable or webbing is attached by various methods to the membrane or is an integral part of the membrane. This is not a cable-supported structure.

CANOPY. A permanent structure or architectural projection of rigid construction over which a covering is attached that provides weather protection, identity or decoration. A canopy is permitted to be structurally independent or supported by attachment to a building on one or more sides.

[F] CARBON DIOXIDE EXTINGUISHING SYSTEMS. A system supplying carbon dioxide (CO_2) from a pressurized vessel through fixed pipes and nozzles. The system includes a manual- or *automatic*-actuating mechanism.

CARE SUITE. In Group I-2 occupancies, a group of treatment rooms, care recipient sleeping rooms and the support rooms or spaces and circulation space within the suite where staff are in attendance for supervision of all care recipients within the suite, and the suite is in compliance with the requirements of Section 407.4.4.

[BS] CAST STONE. A building stone manufactured from Portland cement concrete precast and used as a *trim*, *veneer* or facing on or in buildings or structures.

[F] CEILING LIMIT. The maximum concentration of an air-borne contaminant to which one may be exposed. The ceiling limits utilized are those published in DOL 29 CFR Part 1910.1000. The ceiling Recommended Exposure Limit (REL-C) concentrations published by the U.S. National Institute for Occupational Safety and Health (NIOSH), Threshold Limit Value—Ceiling (TLV-C) concentrations published by the American Conference of Governmental Industrial Hygienists (ACGIH), Ceiling Workplace Environmental Exposure Level (WEEL-Ceiling) Guides published by the American Industrial Hygiene Association (AIHA), and other *approved*, consistent measures are allowed as surrogates for hazardous substances not listed in DOL 29 CFR Part 1910.1000.

CEILING RADIATION DAMPER. A *listed* device installed in a ceiling membrane of a fire-resistance-rated floor/ceiling or roof/ceiling assembly to limit *automatically* the radiative heat transfer through an air inlet/outlet opening. Ceiling radiation dampers include air terminal units, ceiling dampers and ceiling air diffusers.

CELL (Group I-3 occupancy). A room within a housing unit in a detention or correctional facility used to confine inmates or prisoners.

[BS] CELL (masonry). A void space having a gross cross-sectional *area* greater than $1^1/_2$ square inches (967 mm^2).

CELL TIER. Levels of *cells* vertically stacked above one another within a *housing unit*.

[BS] CEMENT PLASTER. A mixture of Portland or blended cement, Portland cement or blended cement and hydrated lime, masonry cement or plastic cement and aggregate and other *approved* materials as specified in this code.

CERAMIC FIBER BLANKET. A high-temperature *mineral wool* insulation material made of alumina-silica ceramic or calcium magnesium silicate soluble fibers and weighing 4 to 10 pounds per cubic foot (pcf) (64 to 160 kg/m^3).

CERTIFICATE OF COMPLIANCE. A certificate stating that materials and products meet specified standards or that work was done in compliance with *approved construction documents*.

[A] CHANGE OF OCCUPANCY. A change in the purpose or level of activity within a building that involves a change in application of the requirements of this code.

[M] CHIMNEY. A primarily vertical structure containing one or more flues, for the purpose of carrying gaseous products of combustion and air from a fuel-burning appliance to the outdoor atmosphere.

Factory-built chimney. A *listed* and *labeled chimney* composed of factory-made components, assembled in the field in accordance with manufacturer's instructions and the conditions of the listing.

Masonry chimney. A field-constructed *chimney* composed of solid masonry units, bricks, stones, or concrete.

Metal chimney. A field-constructed *chimney* of metal.

[M] CHIMNEY TYPES.

High-heat appliance type. An *approved* chimney for removing the products of combustion from fuel-burning, high-heat appliances producing combustion gases in excess of 2000°F (1093°C) measured at the appliance flue outlet (see Section 2113.11.3).

Low-heat appliance type. An *approved* chimney for removing the products of combustion from fuel-burning, low-heat appliances producing combustion gases not in excess of 1000°F (538°C) under normal operating conditions, but capable of producing combustion gases of 1400°F (760°C) during intermittent forces firing for periods up to 1 hour. Temperatures shall be measured at the appliance flue outlet.

Masonry type. A field-constructed chimney of solid *masonry units* or stones.

Medium-heat appliance type. An *approved* chimney for removing the products of combustion from fuel-burning, medium-heat appliances producing combustion gases not exceeding 2000°F (1093°C) measured at the appliance flue outlet (see Section 2113.11.2).

CIRCULATION PATH. An exterior or interior way of passage from one place to another for pedestrians.

[F] CLEAN AGENT. Electrically nonconducting, volatile or gaseous fire extinguishant that does not leave a residue upon vaporation.

[E] CLIMATE ZONE. A geographical region that has been assigned climatic criteria as specified in Chapters 3CE and 3RE of the *International Energy Conservation Code*.

CLINIC, OUTPATIENT. Buildings or portions thereof used to provide *medical care* on less than a 24-hour basis to persons who are not rendered *incapable of self-preservation* by the services provided.

[F] CLOSED SYSTEM. The *use* of a *solid* or *liquid hazardous material* involving a closed vessel or system that remains closed during normal operations where vapors emitted by the product are not liberated outside of the vessel or system and the product is not exposed to the atmosphere during normal operations; and all *uses* of *compressed gases*. Examples of closed systems for *solids* and *liquids* include product conveyed through a piping system into a closed vessel, system or piece of equipment.

[BS] COASTAL A ZONE. Area within a *special flood hazard area*, landward of a V zone or landward of an open coast without mapped *coastal high hazard areas*. In a coastal A zone, the principal source of flooding must be astronomical tides, storm surges, seiches or tsunamis, not riverine flooding. During the base flood conditions, the potential for breaking wave height shall be greater than or equal to $1^1/_2$ feet (457 mm). The inland limit of the coastal A zone is (a) the Limit of Moderate Wave Action if delineated on a FIRM, or (b) designated by the authority having jurisdiction.

[BS] COASTAL HIGH HAZARD AREA. Area within the *special flood hazard area* extending from offshore to the inland limit of a primary dune along an open coast and any other area that is subject to high-velocity wave action from storms or seismic sources, and shown on a Flood Insurance Rate Map (FIRM) or other flood hazard map as velocity Zone V, VO, VE or V1-30.

[BS] COLLAR JOINT. Vertical longitudinal space between *wythes* of *masonry* or between *masonry wythe* and backup construction that is permitted to be filled with *mortar* or grout.

[BS] COLLECTOR. A horizontal *diaphragm* element parallel and in line with the applied force that collects and transfers *diaphragm* shear forces to the vertical elements of the lateral force-resisting system or distributes forces within the *diaphragm*, or both.

COMBINATION FIRE/SMOKE DAMPER. A *listed* device installed in ducts and air transfer openings designed to close *automatically* upon the detection of heat and resist the passage of flame and smoke. The device is installed to operate *automatically*, controlled by a smoke detection system, and where required, is capable of being positioned from a *fire command center*

[F] COMBUSTIBLE DUST. Finely divided *solid* material that is 420 microns or less in diameter and which, when dispersed in air in the proper proportions, could be ignited by a flame, spark or other source of ignition. Combustible dust will pass through a U.S. No. 40 standard sieve.

[F] COMBUSTIBLE FIBERS. Readily ignitable and free-burning materials in a fibrous or shredded form, such as cocoa fiber, cloth, cotton, excelsior, hay, hemp, henequen, istle, jute, kapok, oakum, rags, sisal, Spanish moss, straw, tow, wastepaper, certain synthetic fibers or other like materials. This definition does not include densely packed baled cotton.

[F] COMBUSTIBLE LIQUID. A *liquid* having a closed cup *flash point* at or above 100°F (38°C). Combustible liquids shall be subdivided as follows:

Class II. *Liquids* having a closed cup *flash point* at or above 100°F (38°C) and below 140°F (60°C).

Class IIIA. *Liquids* having a closed cup *flash point* at or above 140°F (60°C) and below 200°F (93°C).

Class IIIB. *Liquids* having a closed cup *flash point* at or above 200°F (93°C).

The category of combustible liquids does not include *compressed gases* or *cryogenic fluids*.

COMMERCIAL MOTOR VEHICLE. A motor vehicle used to transport passengers or property where the motor vehicle:

1. Has a gross vehicle weight rating of 10,000 pounds (4540 kg) or more; or
2. Is designed to transport 16 or more passengers, including the driver.

COMMON PATH OF EGRESS TRAVEL. That portion of the *exit access* travel distance measured from the most remote

point within a *story* to that point where the occupants have separate access to two *exits* or *exit access* doorways.

COMMON USE. Interior or exterior *circulation paths*, rooms, spaces or elements that are not for public use and are made available for the shared use of two or more people.

[F] COMPRESSED GAS. A material, or mixture of materials, that:

1. Is a gas at 68°F (20°C) or less at 14.7 pounds per square inch atmosphere (psia) (101 kPa) of pressure; and
2. Has a *boiling point* of 68°F (20°C) or less at 14.7 psia (101 kPa) which is either liquefied, nonliquefied or in solution, except those gases which have no other health- or physical-hazard properties are not considered to be compressed until the pressure in the packaging exceeds 41 psia (282 kPa) at 68°F (20°C).

The states of a compressed gas are categorized as follows:

1. Nonliquefied compressed gases are gases, other than those in solution, which are in a packaging under the charged pressure and are entirely gaseous at a temperature of 68°F (20°C).
2. Liquefied compressed gases are gases that, in a packaging under the charged pressure, are partially *liquid* at a temperature of 68°F (20°C).
3. Compressed gases in solution are nonliquefied gases that are dissolved in a solvent.
4. Compressed gas mixtures consist of a mixture of two or more compressed gases contained in a packaging, the hazard properties of which are represented by the properties of the mixture as a whole.

[BS] CONCRETE.

Carbonate aggregate. Concrete made with aggregates consisting mainly of calcium or magnesium carbonate, such as limestone or dolomite, and containing 40 percent or less quartz, chert or flint.

Cellular. A lightweight insulating concrete made by mixing a preformed foam with Portland cement slurry and having a dry unit weight of approximately 30 pcf (480 kg/m^3).

Lightweight aggregate. Concrete made with aggregates of expanded clay, shale, slag or slate or sintered fly ash or any natural lightweight aggregate meeting ASTM C 330 and possessing equivalent fire-resistance properties and weighing 85 to 115 pcf (1360 to 1840 kg/m^3).

Perlite. A lightweight insulating concrete having a dry unit weight of approximately 30 pcf (480 kg/m^3) made with perlite concrete aggregate. Perlite aggregate is produced from a volcanic rock which, when heated, expands to form a glass-like material of cellular structure.

Sand-lightweight. Concrete made with a combination of expanded clay, shale, slag, slate, sintered fly ash, or any natural lightweight aggregate meeting ASTM C 330 and possessing equivalent fire-resistance properties and natural sand. Its unit weight is generally between 105 and 120 pcf (1680 and 1920 kg/m^3).

Siliceous aggregate. Concrete made with normal-weight aggregates consisting mainly of silica or compounds other than calcium or magnesium carbonate, which contains more than 40-percent quartz, chert or flint.

Vermiculite. A light weight insulating concrete made with vermiculite concrete aggregate which is laminated micaceous material produced by expanding the ore at high temperatures. When added to a Portland cement slurry the resulting concrete has a dry unit weight of approximately 30 pcf (480 kg/m^3).

CONGREGATE LIVING FACILITIES. A building or part thereof that contains *sleeping units* where residents share bathroom or kitchen facilities, or both.

[F] CONSTANTLY ATTENDED LOCATION. A designated location at a facility staffed by trained personnel on a continuous basis where alarm or supervisory signals are monitored and facilities are provided for notification of the fire department or other emergency services.

[A] CONSTRUCTION DOCUMENTS. Written, graphic and pictorial documents prepared or assembled for describing the design, location and physical characteristics of the elements of a project necessary for obtaining a building *permit*.

CONSTRUCTION TYPES. See Section 602.

Type I. See Section 602.2.

Type II. See Section 602.2.

Type III. See Section 602.3.

Type IV. See Section 602.4.

Type V. See Section 602.5.

[F] CONTINUOUS GAS DETECTION SYSTEM. A gas detection system where the analytical instrument is maintained in continuous operation and sampling is performed without interruption. Analysis is allowed to be performed on a cyclical basis at intervals not to exceed 30 minutes.

[F] CONTROL AREA. Spaces within a building where quantities of *hazardous materials* not exceeding the maximum allowable quantities per control area are stored, dispensed, *used* or handled. See the definition of "Outdoor control area" in the *International Fire Code*.

CONTROLLED LOW-STRENGTH MATERIAL. A self-compacted, cementitious material used primarily as a backfill in place of compacted fill.

CONVENTIONAL LIGHT-FRAME CONSTRUCTION. A type of construction whose primary structural elements are formed by a system of repetitive wood-framing members. See Section 2308 for conventional light-frame construction provisions.

CORNICE. A projecting horizontal molded element located at or near the top of an architectural feature.

CORRIDOR. An enclosed *exit access* component that defines and provides a path of egress travel.

CORRIDOR, OPEN-ENDED. See "Open-ended corridor."

CORRIDOR DAMPER. A *listed* device intended for use where air ducts penetrate or terminate at horizontal openings in the ceilings of fire-resistance-rated corridors, where the

corridor ceiling is permitted to be constructed as required for the corridor walls.

[BS] CORROSION RESISTANCE. The ability of a material to withstand deterioration of its surface or its properties when exposed to its environment.

[F] CORROSIVE. A chemical that causes visible destruction of, or irreversible alterations in, living tissue by chemical action at the point of contact. A chemical shall be considered corrosive if, when tested on the intact skin of albino rabbits by the method described in DOTn 49 CFR, Part 173.137, such chemical destroys or changes irreversibly the structure of the tissue at the point of contact following an exposure period of 4 hours. This term does not refer to action on inanimate surfaces.

COURT. An open, uncovered space, unobstructed to the sky, bounded on three or more sides by exterior building walls or other enclosing devices.

COVERED MALL BUILDING. A single building enclosing a number of tenants and occupants, such as retail stores, drinking and dining establishments, entertainment and amusement facilities, passenger transportation terminals, offices and other similar uses wherein two or more tenants have a main entrance into one or more malls. *Anchor buildings* shall not be considered as a part of the covered mall building. The term "covered mall building" shall include *open mall buildings* as defined below.

Mall. A roofed or covered common pedestrian area within a *covered mall building* that serves as access for two or more tenants and not to exceed three levels that are open to each other. The term "mall" shall include open malls as defined below.

Open mall. An unroofed common pedestrian way serving a number of tenants not exceeding three levels. Circulation at levels above grade shall be permitted to include open exterior balconies leading to *exits* discharging at grade.

Open mall building. Several structures housing a number of tenants, such as retail stores, drinking and dining establishments, entertainment and amusement facilities, offices, and other similar uses, wherein two or more tenants have a main entrance into one or more open malls. *Anchor buildings* are not considered as a part of the open mall building.

[BS] CRIPPLE WALL. A framed stud wall extending from the top of the foundation to the underside of floor framing for the lowest occupied floor level.

[F] CRITICAL CIRCUIT. A circuit that requires continuous operation to ensure safety of the structure and occupants.

[BS] CROSS-LAMINATED TIMBER. A prefabricated engineered wood product consisting of not less than three layers of solid-sawn lumber or *structural composite lumber* where the adjacent layers are cross oriented and bonded with structural adhesive to form a solid wood element.

[F] CRYOGENIC FLUID. A *liquid* having a *boiling point* lower than -150°F (-101°C) at 14.7 pounds per square inch atmosphere (psia) (an absolute pressure of 101 kPa).

CUSTODIAL CARE. Assistance with day-to-day living tasks; such as assistance with cooking, taking medication, bathing, using toilet facilities and other tasks of daily living. Custodial care includes persons receiving care who have the ability to respond to emergency situations and evacuate at a slower rate and/or who have mental and psychiatric complications.

[BS] DALLE GLASS. A decorative composite glazing material made of individual pieces of glass that are embedded in a cast matrix of concrete or epoxy.

DAMPER. See "*Ceiling radiation damper*," "*Combination fire/smoke damper*," "*Corridor damper*," "*Fire damper*" and "*Smoke damper*."

[BS] DANGEROUS. Any building, structure or portion thereof that meets any of the conditions described below shall be deemed dangerous:

1. The building or structure has collapsed, has partially collapsed, has moved off its foundation or lacks the necessary support of the ground.
2. There exists a significant risk of collapse, detachment or dislodgment of any portion, member, appurtenance or ornamentation of the building or structure under service loads.

[F] DAY BOX. A portable magazine designed to hold explosive materials constructed in accordance with the requirements for a Type 3 magazine as defined and classified in Chapter 56 of the *International Fire Code*.

[BS] DEAD LOAD. The weight of materials of construction incorporated into the building, including but not limited to walls, floors, roofs, ceilings, *stairways*, built-in partitions, finishes, cladding and other similarly incorporated architectural and structural items, and the weight of fixed service equipment, such as cranes, plumbing stacks and risers, electrical feeders, heating, ventilating and air-conditioning systems and *automatic sprinkler systems*.

[BS] DECORATIVE GLASS. A carved, leaded or *Dalle glass* or glazing material whose purpose is decorative or artistic, not functional; whose coloring, texture or other design qualities or components cannot be removed without destroying the glazing material and whose surface, or assembly into which it is incorporated, is divided into segments.

[F] DECORATIVE MATERIALS. All materials applied over the building *interior finish* for decorative, acoustical or other effect including, but not limited to, curtains, draperies, fabrics and streamers; and all other materials utilized for decorative effect including, but not limited to, bulletin boards, artwork, posters, photographs, batting, cloth, cotton, hay, stalks, straw, vines, leaves, trees, moss and similar items, foam plastics and materials containing foam plastics. Decorative materials do not include wall coverings, ceiling coverings, floor coverings, ordinary window shades, *interior finish* and materials 0.025 inch (0.64 mm) or less in thickness applied directly to and adhering tightly to a substrate.

[BS] DEEP FOUNDATION. A deep foundation is a foundation element that does not satisfy the definition of a *shallow foundation*.

DEFEND IN PLACE. A method of emergency response that engages building components and trained staff to provide

occupant safety during an emergency. Emergency response involves remaining in place, relocating within the building, or both, without evacuating the building.

[A] DEFERRED SUBMITTAL. Those portions of the design that are not submitted at the time of the application and that are to be submitted to the *building official* within a specified period.

[F] DEFLAGRATION. An exothermic reaction, such as the extremely rapid oxidation of a flammable dust or vapor in air, in which the reaction progresses through the unburned material at a rate less than the velocity of sound. A deflagration can have an explosive effect.

[F] DELUGE SYSTEM. A sprinkler system employing open sprinklers attached to a piping system connected to a water supply through a valve that is opened by the operation of a detection system installed in the same areas as the sprinklers. When this valve opens, water flows into the piping system and discharges from all sprinklers attached thereto.

[BS] DESIGN DISPLACEMENT. See Section 1905.1.1.

[BS] DESIGN EARTHQUAKE GROUND MOTION. The earthquake ground motion that buildings and structures are specifically proportioned to resist in Section 1613.

[BS] DESIGN FLOOD. The *flood* associated with the greater of the following two areas:

1. Area with a flood plain subject to a 1-percent or greater chance of *flooding* in any year.
2. Area designated as a *flood hazard area* on a community's flood hazard map, or otherwise legally designated.

[BS] DESIGN FLOOD ELEVATION. The elevation of the "*design flood*," including wave height, relative to the datum specified on the community's legally designated flood hazard map. In areas designated as Zone AO, the *design flood elevation* shall be the elevation of the highest existing grade of the building's perimeter plus the depth number (in feet) specified on the flood hazard map. In areas designated as Zone AO where a depth number is not specified on the map, the depth number shall be taken as being equal to 2 feet (610 mm).

[A] DESIGN PROFESSIONAL, REGISTERED. See "Registered design professional."

[A] DESIGN PROFESSIONAL IN RESPONSIBLE CHARGE, REGISTERED. See "Registered design professional in responsible charge."

[BS] DESIGN STRENGTH. The product of the nominal strength and a *resistance factor* (or strength reduction factor).

[BS] DESIGNATED SEISMIC SYSTEM. Those nonstructural components that require design in accordance with Chapter 13 of ASCE 7 and for which the component importance factor, I_p, is greater than 1 in accordance with Section 13.1.3 of ASCE 7.

[F] DETACHED BUILDING. A separate single-*story* building, without a basement or crawl space, used for the storage or *use* of *hazardous materials* and located an *approved* distance from all structures.

[BS] DETAILED PLAIN CONCRETE STRUCTURAL WALL. See Section 1905.1.1

DETECTABLE WARNING. A standardized surface feature built in or applied to walking surfaces or other elements to warn visually impaired persons of hazards on a *circulation path.*

[F] DETECTOR, HEAT. A fire detector that senses heat—either abnormally high temperature or rate of rise, or both.

[F] DETONATION. An exothermic reaction characterized by the presence of a shock wave in the material which establishes and maintains the reaction. The reaction zone progresses through the material at a rate greater than the velocity of sound. The principal heating mechanism is one of shock compression. Detonations have an explosive effect.

DETOXIFICATION FACILITIES. Facilities that provide treatment for substance abuse, serving care recipients who are *incapable of self-preservation* or who are harmful to themselves or others.

[BS] DIAPHRAGM. A horizontal or sloped system acting to transmit lateral forces to vertical elements of the lateral force-resisting system. When the term "diaphragm" is used, it shall include horizontal bracing systems.

Diaphragm, blocked. In *light-frame construction*, a diaphragm in which all sheathing edges not occurring on a framing member are supported on and fastened to blocking.

Diaphragm boundary. In *light-frame construction,* a location where shear is transferred into or out of the diaphragm sheathing. Transfer is either to a boundary element or to another force-resisting element.

Diaphragm chord. A diaphragm boundary element perpendicular to the applied load that is assumed to take axial stresses due to the diaphragm moment.

Diaphragm, unblocked. A diaphragm that has edge nailing at supporting members only. Blocking between supporting structural members at panel edges is not included. Diaphragm panels are field nailed to supporting members.

DIMENSIONS (for Chapter 21).

Nominal. The *specified dimension* plus an allowance for the *joints* with which the units are to be laid. Nominal dimensions are usually stated in whole numbers. Thickness is given first, followed by height and then length.

Specified. Dimensions specified for the manufacture or construction of a unit, *joint* or element.

DIRECT ACCESS. A path of travel from a space to an immediately adjacent space through an opening in the common wall between the two spaces.

[F] DISPENSING. The pouring or transferring of any material from a container, tank or similar vessel, whereby vapors, dusts, fumes, mists or gases are liberated to the atmosphere.

DOOR, BALANCED. See "Balanced door."

DOOR, LOW-ENERGY POWER-OPERATED. See "Low-energy power-operated door."

DOOR, POWER-ASSISTED. See "Power-assisted door."

DOOR, POWER-OPERATED. See "Power-operated door."

DOORWAY, EXIT ACCESS. See "Exit access doorway."

DORMITORY. A space in a building where group sleeping accommodations are provided in one room, or in a series of closely associated rooms, for persons not members of the same family group, under joint occupancy and single management, as in college dormitories or fraternity houses.

DRAFTSTOP. A material, device or construction installed to restrict the movement of air within open spaces of concealed areas of building components such as crawl spaces, floor/ceiling assemblies, roof/ceiling assemblies and *attics*.

[BS] DRAG STRUT. See "Collector."

[BS] DRILLED SHAFT. A cast-in-place deep foundation element constructed by drilling a hole (with or without permanent casing) into soil or rock and filling it with fluid concrete.

Socketed drilled shaft. A drilled shaft with a permanent pipe or tube casing that extends down to bedrock and an uncased socket drilled into the bedrock.

[F] DRY-CHEMICAL EXTINGUISHING AGENT. A powder composed of small particles, usually of sodium bicarbonate, potassium bicarbonate, urea-potassium-based bicarbonate, potassium chloride or monoammonium phosphate, with added particulate material supplemented by special treatment to provide resistance to packing, resistance to moisture absorption (caking) and the proper flow capabilities.

[BS] DRY FLOODPROOFING. A combination of design modifications that results in a building or structure, including the attendant utilities and equipment and sanitary facilities, being water tight with walls substantially impermeable to the passage of water and with structural components having the capacity to resist *loads* as identified in ASCE 7.

DWELLING. A building that contains one or two *dwelling units* used, intended or designed to be used, rented, leased, let or hired out to be occupied for living purposes.

DWELLING UNIT. A single unit providing complete, independent living facilities for one or more persons, including permanent provisions for living, sleeping, eating, cooking and sanitation.

DWELLING UNIT OR SLEEPING UNIT, MULTISTORY. See "Multistory unit."

EGRESS COURT. A *court* or *yard* which provides access to a *public way* for one or more *exits*.

ELECTRICAL CIRCUIT PROTECTIVE SYSTEM. A specific construction of devices, materials, or coatings installed as a fire-resistive barrier system applied to electrical system components, such as cable trays, conduits and other raceways, open run cables and conductors, cables, and conductors.

[F] ELEVATOR GROUP. A grouping of elevators in a building located adjacent or directly across from one another that responds to common hall call buttons.

[F] EMERGENCY ALARM SYSTEM. A system to provide indication and warning of emergency situations involving *hazardous materials*.

[F] EMERGENCY CONTROL STATION. An *approved* location on the premises where signals from emergency equipment are received and which is staffed by trained personnel.

EMERGENCY ESCAPE AND RESCUE OPENING. An operable window, door or other similar device that provides for a means of escape and access for rescue in the event of an emergency.

[F] EMERGENCY VOICE/ALARM COMMUNICATIONS. Dedicated manual or *automatic* facilities for originating and distributing voice instructions, as well as alert and evacuation signals pertaining to a fire emergency, to the occupants of a building.

[F] EMERGENCY POWER SYSTEM. A source of automatic electric power of a required capacity and duration to operate required life safety, fire alarm, detection and ventilation systems in the event of a failure of the primary power. Emergency power systems are required for electrical loads where interruption of the primary power could result in loss of human life or serious injuries.

EMPLOYEE WORK AREA. All or any portion of a space used only by employees and only for work. *Corridors*, toilet rooms, kitchenettes and break rooms are not employee work areas.

[BS] ENGINEERED WOOD RIM BOARD. A full-depth structural composite lumber, wood structural panel, structural glued laminated timber or prefabricated wood I-joist member designed to transfer horizontal (shear) and vertical (compression) loads, provide attachment for diaphragm sheathing, siding and exterior deck ledgers, and provide lateral support at the ends of floor or roof joists or rafters.

ENTRANCE, PUBLIC. See "Public entrance."

ENTRANCE, RESTRICTED. See "Restricted entrance."

ENTRANCE, SERVICE. See "Service entrance."

EQUIPMENT PLATFORM. An unoccupied, elevated platform used exclusively for mechanical systems or industrial process equipment, including the associated elevated walkways, stairways, alternating tread devices and ladders necessary to access the platform (see Section 505.3).

ESSENTIAL FACILITIES. Buildings and other structures that are intended to remain operational in the event of extreme environmental loading from *flood*, wind, snow or earthquakes.

[F] EXHAUSTED ENCLOSURE. An appliance or piece of equipment that consists of a top, a back and two sides providing a means of local exhaust for capturing gases, fumes, vapors and mists. Such enclosures include laboratory hoods, exhaust fume hoods and similar appliances and equipment used to locally retain and exhaust the gases, fumes, vapors and mists that could be released. Rooms or areas provided with general *ventilation*, in themselves, are not exhausted enclosures.

EXISTING STRUCTURE. A structure erected prior to the date of adoption of the appropriate code, or one for which a legal building *permit* has been issued. For application of provisions in *flood hazard areas*, an existing structure is any building or structure for which the start of construction commenced before the effective date of the community's first flood plain management code, ordinance or standard.

EXIT. That portion of a *means of egress* system between the *exit access* and the *exit discharge* or *public way*. Exit components include exterior exit doors at the *level of exit discharge*, *interior exit stairways* and *ramps*, *exit passageways*, *exterior exit stairways* and *ramps* and *horizontal exits*.

EXIT ACCESS. That portion of a *means of egress* system that leads from any occupied portion of a building or structure to an *exit*.

EXIT ACCESS DOORWAY. A door or access point along the path of egress travel from an occupied room, area or space where the path of egress enters an intervening room, *corridor*, *exit access stairway* or *ramp*.

EXIT ACCESS RAMP. A *ramp* within the exit access portion of the means of egress system.

EXIT ACCESS STAIRWAY. A *stairway* with the exit access portion of the means of egress system.

EXIT DISCHARGE. That portion of a *means of egress* system between the termination of an *exit* and a *public way*.

EXIT DISCHARGE, LEVEL OF. The *story* at the point at which an *exit* terminates and an *exit discharge* begins.

EXIT, HORIZONTAL. See "Horizontal exit."

EXIT PASSAGEWAY. An *exit* component that is separated from other interior spaces of a building or structure by fire-resistance-rated construction and opening protectives, and provides for a protected path of egress travel in a horizontal direction to an *exit* or to the *exit discharge*.

EXPANDED VINYL WALL COVERING. Wall covering consisting of a woven textile backing, an expanded vinyl base coat layer and a nonexpanded vinyl skin coat. The expanded base coat layer is a homogeneous vinyl layer that contains a blowing agent. During processing, the blowing agent decomposes, causing this layer to expand by forming closed cells. The total thickness of the wall covering is approximately 0.055 inch to 0.070 inch (1.4 mm to 1.78 mm).

[F] EXPLOSION. An effect produced by the sudden violent expansion of gases, which may be accompanied by a shock wave or disruption, or both, of enclosing materials or structures. An explosion could result from any of the following:

1. Chemical changes such as rapid oxidation, *deflagration* or *detonation*, decomposition of molecules and runaway polymerization (usually *detonations*).
2. Physical changes such as pressure tank ruptures.
3. Atomic changes (nuclear fission or fusion).

[F] EXPLOSIVE. A chemical compound, mixture or device, the primary or common purpose of which is to function by explosion. The term includes, but is not limited to, dynamite, black powder, pellet powder, initiating explosives, detonators, safety fuses, squibs, detonating cord, igniter cord, igniters and display fireworks, 1.3G.

The term "explosive" includes any material determined to be within the scope of USC Title 18: Chapter 40 and also includes any material classified as an explosive other than consumer fireworks, 1.4G by the *hazardous materials* regulations of DOTn 49 CFR Parts 100-185.

High explosive. Explosive material, such as dynamite, which can be caused to detonate by means of a No. 8 test blasting cap when unconfined.

Low explosive. Explosive material that will burn or deflagrate when ignited. It is characterized by a rate of reaction that is less than the speed of sound. Examples of low explosives include, but are not limited to, black powder; safety fuse; igniters; igniter cord; fuse lighters; fireworks, 1.3G and propellants, 1.3C.

Mass-detonating explosives. Division 1.1, 1.2 and 1.5 explosives alone or in combination, or loaded into various types of ammunition or containers, most of which can be expected to explode virtually instantaneously when a small portion is subjected to fire, severe concussion, impact, the impulse of an initiating agent or the effect of a considerable discharge of energy from without. Materials that react in this manner represent a mass explosion hazard. Such an explosive will normally cause severe structural damage to adjacent objects. Explosive propagation could occur immediately to other items of ammunition and explosives stored sufficiently close to and not adequately protected from the initially exploding pile with a time interval short enough so that two or more quantities must be considered as one for quantity-distance purposes.

UN/DOTn Class 1 explosives. The former classification system used by DOTn included the terms "high" and "low" explosives as defined herein. The following terms further define explosives under the current system applied by DOTn for all explosive materials defined as hazard Class 1 materials. Compatibility group letters are used in concert with the division to specify further limitations on each division noted (i.e., the letter G identifies the material as a pyrotechnic substance or article containing a pyrotechnic substance and similar materials).

Division 1.1. Explosives that have a mass explosion hazard. A mass explosion is one which affects almost the entire load instantaneously.

Division 1.2. Explosives that have a projection hazard but not a mass explosion hazard.

Division 1.3. Explosives that have a fire hazard and either a minor blast hazard or a minor projection hazard or both, but not a mass explosion hazard.

Division 1.4. Explosives that pose a minor explosion hazard. The explosive effects are largely confined to the package and no projection of fragments of appreciable size or range is to be expected. An external fire must not cause virtually instantaneous explosion of almost the entire contents of the package.

Division 1.5. Very insensitive explosives. This division is comprised of substances that have a mass explosion

hazard, but that are so insensitive there is very little probability of initiation or of transition from burning to *detonation* under normal conditions of transport.

Division 1.6. Extremely insensitive articles which do not have a mass explosion hazard. This division is comprised of articles that contain only extremely insensitive detonating substances and which demonstrate a negligible probability of accidental initiation or propagation.

EXTERIOR EXIT RAMP. An *exit* component that serves to meet one or more *means of egress* design requirements, such as required number of *exits* or *exit access* travel distance, and is open to *yards*, *courts* or *public ways*.

EXTERIOR EXIT STAIRWAY. An *exit* component that serves to meet one or more *means of egress* design requirements, such as required number of *exits* or *exit access* travel distance, and is open to *yards*, *courts* or *public ways*.

EXTERIOR INSULATION AND FINISH SYSTEMS (EIFS). EIFS are nonstructural, nonload-bearing, *exterior wall* cladding systems that consist of an insulation board attached either adhesively or mechanically, or both, to the substrate; an integrally reinforced base coat and a textured protective finish coat.

EXTERIOR INSULATION AND FINISH SYSTEMS (EIFS) WITH DRAINAGE. An EIFS that incorporates a means of drainage applied over a *water-resistive barrier*.

EXTERIOR SURFACES. Weather-exposed surfaces.

EXTERIOR WALL. A wall, bearing or nonbearing, that is used as an enclosing wall for a building, other than a *fire wall*, and that has a slope of 60 degrees (1.05 rad) or greater with the horizontal plane.

EXTERIOR WALL COVERING. A material or assembly of materials applied on the exterior side of *exterior walls* for the purpose of providing a weather-resisting barrier, insulation or for aesthetics, including but not limited to, *veneers*, siding, *exterior insulation and finish systems*, architectural *trim* and embellishments such as *cornices*, soffits, facias, gutters and leaders.

EXTERIOR WALL ENVELOPE. A system or assembly of *exterior wall* components, including *exterior wall* finish materials, that provides protection of the building structural members, including framing and sheathing materials, and conditioned interior space, from the detrimental effects of the exterior environment.

F RATING. The time period that the *through-penetration firestop system* limits the spread of fire through the penetration when tested in accordance with ASTM E 814 or UL 1479.

FABRIC PARTITION. A partition consisting of a finished surface made of fabric, without a continuous rigid backing, that is directly attached to a framing system in which the vertical framing members are spaced greater than 4 feet (1219 mm) on center.

[BS] FABRICATED ITEM. Structural, load-bearing or lateral load-resisting members of assemblies consisting of materials assembled prior to installation in a building or structure, or subjected to operations such as heat treatment, thermal cutting, cold working or reforming after manufacture and prior to installation in a building or structure. Materials produced in accordance with standards referenced by this code, such as rolled structural steel shapes, steel reinforcing bars, *masonry units* and *wood structural panels*, or in accordance with a referenced standard that provides requirements for quality control done under the supervision of a third-party quality control agency, are not "fabricated items."

[F] FABRICATION AREA. An area within a semiconductor fabrication facility and related research and development areas in which there are processes using hazardous production materials. Such areas are allowed to include ancillary rooms or areas such as dressing rooms and offices that are directly related to the fabrication area processes.

[A] FACILITY. All or any portion of buildings, structures, *site* improvements, elements and pedestrian or vehicular routes located on a *site*.

[BS] FACTORED LOAD. The product of a *nominal load* and a *load factor*.

FENESTRATION. Skylights, roof windows, vertical windows (fixed or moveable), opaque doors, glazed doors, glazed block and combination opaque/glazed doors. Fenestration includes products with glass and nonglass glazing materials.

[BS] FIBER-CEMENT (BACKER BOARD, SIDING, SOFFIT, TRIM AND UNDERLAYMENT) PRODUCTS. Manufactured thin section composites of hydraulic cementitious matrices and discrete nonasbestos fibers.

[BS] FIBER-REINFORCED POLYMER. A polymeric composite material consisting of reinforcement fibers, such as glass, impregnated with a fiber-binding polymer which is then molded and hardened. Fiber-reinforced polymers are permitted to contain cores laminated between fiber-reinforced polymer facings.

[BS] FIBERBOARD. A fibrous, homogeneous panel made from lignocellulosic fibers (usually wood or cane) and having a density of less than 31 pounds per cubic foot (pcf) (497 kg/m^3) but more than 10 pcf (160 kg/m^3).

[BS] FIELD NAILING. See "Nailing, field."

FIRE ALARM BOX, MANUAL. See "Manual fire alarm box."

[F] FIRE ALARM CONTROL UNIT. A system component that receives inputs from *automatic* and manual *fire alarm* devices and may be capable of supplying power to detection devices and transponders or off-premises transmitters. The control unit may be capable of providing a transfer of power to the notification appliances and transfer of condition to relays or devices.

[F] FIRE ALARM SIGNAL. A signal initiated by a *fire alarm-initiating device* such as a *manual fire alarm box*, *automatic fire detector*, waterflow switch or other device whose activation is indicative of the presence of a fire or fire signature.

[F] FIRE ALARM SYSTEM. A system or portion of a combination system consisting of components and circuits

arranged to monitor and annunciate the status of *fire alarm* or *supervisory signal-initiating devices* and to initiate the appropriate response to those signals.

FIRE AREA. The aggregate floor area enclosed and bounded by *fire walls*, *fire barriers*, *exterior walls* or *horizontal assemblies* of a building. Areas of the building not provided with surrounding walls shall be included in the fire area if such areas are included within the horizontal projection of the roof or floor next above.

FIRE BARRIER. A fire-resistance-rated wall assembly of materials designed to restrict the spread of fire in which continuity is maintained.

[F] FIRE COMMAND CENTER. The principal attended or unattended location where the status of detection, alarm communications and control systems is displayed, and from which the systems can be manually controlled.

FIRE DAMPER. A *listed* device installed in ducts and air transfer openings designed to close *automatically* upon detection of heat and resist the passage of flame. Fire dampers are classified for use in either static systems that will *automatically* shut down in the event of a fire, or in dynamic systems that continue to operate during a fire. A dynamic fire damper is tested and rated for closure under elevated temperature airflow.

[F] FIRE DETECTOR, AUTOMATIC. A device designed to detect the presence of a fire signature and to initiate action.

FIRE DOOR. The door component of a *fire door assembly*.

FIRE DOOR ASSEMBLY. Any combination of a *fire door*, frame, hardware and other accessories that together provide a specific degree of fire protection to the opening.

FIRE DOOR ASSEMBLY, FLOOR. See "Floor fire door assembly."

FIRE EXIT HARDWARE. *Panic hardware* that is *listed* for use on *fire door assemblies*.

[F] FIRE LANE. A road or other passageway developed to allow the passage of fire apparatus. A fire lane is not necessarily intended for vehicular traffic other than fire apparatus.

FIRE PARTITION. A vertical assembly of materials designed to restrict the spread of fire in which openings are protected.

FIRE PROTECTION RATING. The period of time that an opening protective will maintain the ability to confine a fire as determined by tests specified in Section 715. Ratings are stated in hours or minutes.

[F] FIRE PROTECTION SYSTEM. *Approved* devices, equipment and systems or combinations of systems used to detect a fire, activate an alarm, extinguish or control a fire, control or manage smoke and products of a fire or any combination thereof.

FIRE-RATED GLAZING. Glazing with either a *fire protection rating* or a *fire-resistance rating*.

FIRE RESISTANCE. That property of materials or their assemblies that prevents or retards the passage of excessive heat, hot gases or flames under conditions of use.

FIRE-RESISTANCE RATING. The period of time a building element, component or assembly maintains the ability to confine a fire, continues to perform a given structural function, or both, as determined by the tests, or the methods based on tests, prescribed in Section 703.

FIRE-RESISTANT JOINT SYSTEM. An assemblage of specific materials or products that are designed, tested and fire-resistance rated in accordance with either ASTM E 1966 or UL 2079 to resist for a prescribed period of time the passage of fire through *joints* made in or between fire-resistance-rated assemblies.

[F] FIRE SAFETY FUNCTIONS. Building and fire control functions that are intended to increase the level of life safety for occupants or to control the spread of harmful effects of fire.

FIRE SEPARATION DISTANCE. The distance measured from the building face to one of the following:

1. The closest interior *lot line*.
2. To the centerline of a street, an alley or *public way*.
3. To an imaginary line between two buildings on the lot.

The distance shall be measured at right angles from the face of the wall.

FIRE WALL. A fire-resistance-rated wall having protected openings, which restricts the spread of fire and extends continuously from the foundation to or through the roof, with sufficient structural stability under fire conditions to allow collapse of construction on either side without collapse of the wall.

FIRE WINDOW ASSEMBLY. A window constructed and glazed to give protection against the passage of fire.

FIREBLOCKING. Building materials, or materials *approved* for use as fireblocking, installed to resist the free passage of flame to other areas of the building through concealed spaces.

[M] FIREPLACE. A hearth and fire chamber or similar prepared place in which a fire may be made and which is built in conjunction with a chimney.

FIREPLACE THROAT. The opening between the top of the firebox and the smoke chamber.

FIRESTOP, MEMBRANE-PENETRATION. See "Membrane-penetration firestop."

FIRESTOP, PENETRATION. See "Penetration firestop."

FIRESTOP SYSTEM, THROUGH-PENETRATION. See "Through-penetration firestop system."

[F] FIREWORKS. Any composition or device for the purpose of producing a visible or audible effect for entertainment purposes by combustion, *deflagration* or *detonation* that meets the definition of 1.4G fireworks or 1.3G fireworks.

Fireworks, 1.3G. Large fireworks devices, which are explosive materials, intended for use in fireworks displays and designed to produce audible or visible effects by combustion, *deflagration* or *detonation*. Such 1.3G fireworks include, but are not limited to, firecrackers containing more than 130 milligrams (2 grains) of explosive composi-

tion, aerial shells containing more than 40 grams of pyrotechnic composition, and other display pieces which exceed the limits for classification as 1.4G fireworks. Such 1.3G fireworks are also described as fireworks, UN0335 by the DOTn.

Fireworks, 1.4G. Small fireworks devices containing restricted amounts of pyrotechnic composition designed primarily to produce visible or audible effects by combustion. Such 1.4G fireworks which comply with the construction, chemical composition and labeling regulations of the DOTn for fireworks, UN0336, and the U.S. Consumer Product Safety Commission (CPSC) as set forth in CPSC 16 CFR: Parts 1500 and 1507, are not explosive materials for the purpose of this code.

FIXED BASE OPERATOR (FBO). A commercial business granted the right by the airport sponsor to operate on an airport and provide aeronautical services, such as fueling, hangaring, tie-down and parking, aircraft rental, aircraft maintenance and flight instruction.

FIXED SEATING. Furniture or fixture designed and installed for the use of sitting and secured in place including bench-type seats and seats with or without backs or arm rests.

FLAME SPREAD. The propagation of flame over a surface.

FLAME SPREAD INDEX. A comparative measure, expressed as a dimensionless number, derived from visual measurements of the spread of flame versus time for a material tested in accordance with ASTM E 84 or UL 723.

[F] FLAMMABLE GAS. A material that is a gas at 68°F (20°C) or less at 14.7 pounds per square inch atmosphere (psia) (101 kPa) of pressure [a material that has a *boiling point* of 68°F (20°C) or less at 14.7 psia (101 kPa)] which:

1. Is ignitable at 14.7 psia (101 kPa) when in a mixture of 13 percent or less by volume with air; or
2. Has a flammable range at 14.7 psia (101 kPa) with air of at least 12 percent, regardless of the lower limit.

The limits specified shall be determined at 14.7 psi (101 kPa) of pressure and a temperature of 68°F (20°C) in accordance with ASTM E 681.

[F] FLAMMABLE LIQUEFIED GAS. A liquefied compressed gas which, under a charged pressure, is partially liquid at a temperature of 68°F (20°C) and which is flammable.

[F] FLAMMABLE LIQUID. A *liquid* having a closed cup *flash point* below 100°F (38°C). Flammable liquids are further categorized into a group known as Class I liquids. The Class I category is subdivided as follows:

Class IA. *Liquids* having a *flash point* below 73°F (23°C) and a *boiling point* below 100°F (38°C).

Class IB. *Liquids* having a *flash point* below 73°F (23°C) and a *boiling point* at or above 100°F (38°C).

Class IC. *Liquids* having a *flash point* at or above 73°F (23°C) and below 100°F (38°C). The category of flammable liquids does not include *compressed gases* or *cryogenic fluids*.

[F] FLAMMABLE MATERIAL. A material capable of being readily ignited from common sources of heat or at a temperature of 600°F (316°C) or less.

[F] FLAMMABLE SOLID. A *solid*, other than a blasting agent or *explosive*, that is capable of causing fire through friction, absorption or moisture, spontaneous chemical change, or retained heat from manufacturing or processing, or which has an ignition temperature below 212°F (100°C) or which burns so vigorously and persistently when ignited as to create a serious hazard. A chemical shall be considered a flammable *solid* as determined in accordance with the test method of CPSC 16 CFR; Part 1500.44, if it ignites and burns with a self-sustained flame at a rate greater than 0.1 inch (2.5 mm) per second along its major axis.

[F] FLAMMABLE VAPORS OR FUMES. The concentration of flammable constituents in air that exceeds 25 percent of their *lower flammable limit (LFL).*

[F] FLASH POINT. The minimum temperature in degrees Fahrenheit at which a *liquid* will give off sufficient vapors to form an ignitable mixture with air near the surface or in the container, but will not sustain combustion. The flash point of a *liquid* shall be determined by appropriate test procedure and apparatus as specified in ASTM D 56, ASTM D 93 or ASTM D 3278.

FLIGHT. A continuous run of rectangular treads, *winders* or combination thereof from one landing to another.

[BS] FLOOD or FLOODING. A general and temporary condition of partial or complete inundation of normally dry land from:

1. The overflow of inland or tidal waters.
2. The unusual and rapid accumulation or runoff of surface waters from any source.

[BS] FLOOD DAMAGE-RESISTANT MATERIALS. Any construction material capable of withstanding direct and prolonged contact with floodwaters without sustaining any damage that requires more than cosmetic *repair*.

FLOOD, DESIGN. See "Design flood."

FLOOD ELEVATION, DESIGN. See "Design flood elevation."

[BS] FLOOD HAZARD AREA. The greater of the following two areas:

1. The area within a flood plain subject to a 1-percent or greater chance of *flooding* in any year.
2. The area designated as a flood hazard area on a community's flood hazard map, or otherwise legally designated.

FLOOD HAZARD AREAS, SPECIAL. See "Special flood hazard area."

[BS] FLOOD HAZARD AREA SUBJECT TO HIGH-VELOCITY WAVE ACTION. Area within the *flood hazard area* that is subject to high-velocity wave action, and shown on a Flood Insurance Rate Map (FIRM) or other flood hazard map as Zone V, VO, VE or V1-30.

[BS] FLOOD INSURANCE RATE MAP (FIRM). An official map of a community on which the Federal Emergency

Management Agency (FEMA) has delineated both the *special flood hazard areas* and the risk premium zones applicable to the community.

[BS] FLOOD INSURANCE STUDY. The official report provided by the Federal Emergency Management Agency containing the Flood Insurance Rate Map (FIRM), the Flood Boundary and Floodway Map (FBFM), the water surface elevation of the *base flood* and supporting technical data.

[BS] FLOODWAY. The channel of the river, creek or other watercourse and the adjacent land areas that must be reserved in order to discharge the *base flood* without cumulatively increasing the water surface elevation more than a designated height.

FLOOR AREA, GROSS. The floor area within the inside perimeter of the *exterior walls* of the building under consideration, exclusive of vent *shafts* and *courts*, without deduction for *corridors*, *stairways*, *ramps*, closets, the thickness of interior walls, columns or other features. The floor area of a building, or portion thereof, not provided with surrounding *exterior walls* shall be the usable area under the horizontal projection of the roof or floor above. The gross floor area shall not include *shafts* with no openings or interior *courts*.

FLOOR AREA, NET. The actual occupied area not including unoccupied accessory areas such as *corridors*, *stairways*, *ramps*, toilet rooms, mechanical rooms and closets.

FLOOR FIRE DOOR ASSEMBLY. A combination of a *fire door*, a frame, hardware and other accessories installed in a horizontal plane, which together provide a specific degree of fire protection to a through-opening in a fire-resistance-rated floor (see Section 712.1.13.1).

[F] FOAM-EXTINGUISHING SYSTEM. A special system discharging a foam made from concentrates, either mechanically or chemically, over the area to be protected.

FOAM PLASTIC INSULATION. A plastic that is intentionally expanded by the use of a foaming agent to produce a reduced-density plastic containing voids consisting of open or closed cells distributed throughout the plastic for thermal insulating or acoustical purposes and that has a density less than 20 pounds per cubic foot (pcf) (320 kg/m^3).

[BS] FOLDING AND TELESCOPIC SEATING. Tiered seating having an overall shape and size that is capable of being reduced for purposes of moving or storing and is not a building element.

FOOD COURT. A public seating area located in the *mall* that serves adjacent food preparation tenant spaces.

FOSTER CARE FACILITIES. Facilities that provide care to more than five children, $2^1/_2$ years of age or less.

[BS] FOUNDATION PIER (for Chapter 21). An isolated vertical foundation member whose horizontal dimension measured at right angles to its thickness does not exceed three times its thickness and whose height is equal to or less than four times its thickness.

FRAME STRUCTURE. A building or other structure in which vertical *loads* from floors and roofs are primarily supported by columns.

GABLE. The triangular portion of a wall beneath the end of a dual-slope, pitched, or mono-slope roof or portion thereof and above the top plates of the story or level of the ceiling below.

[F] GAS CABINET. A fully enclosed, ventilated noncombustible enclosure used to provide an isolated environment for *compressed gas* cylinders in storage or *use*. Doors and access ports for exchanging cylinders and accessing pressure-regulating controls are allowed to be included.

[F] GAS ROOM. A separately ventilated, fully enclosed room in which only *compressed gases* and associated equipment and supplies are stored or *used*.

[F] GASEOUS HYDROGEN SYSTEM. An assembly of piping, devices and apparatus designed to generate, store, contain, distribute or transport a nontoxic, gaseous hydrogen-containing mixture having not less than 95-percent hydrogen gas by volume and not more than 1-percent oxygen by volume. Gaseous hydrogen systems consist of items such as *compressed gas* containers, reactors and appurtenances, including pressure regulators, pressure relief devices, manifolds, pumps, compressors and interconnecting piping and tubing and controls.

GLASS FIBERBOARD. Fibrous glass roof insulation consisting of inorganic glass fibers formed into rigid boards using a binder. The board has a top surface faced with asphalt and kraft reinforced with glass fiber.

GRADE FLOOR OPENING. A window or other opening located such that the sill height of the opening is not more than 44 inches (1118 mm) above or below the finished ground level adjacent to the opening.

[BS] GRADE (LUMBER). The classification of lumber in regard to strength and utility in accordance with American Softwood Lumber Standard DOC PS 20 and the grading rules of an *approved* lumber rules-writing agency.

GRADE PLANE. A reference plane representing the average of finished ground level adjoining the building at *exterior walls*. Where the finished ground level slopes away from the *exterior walls*, the reference plane shall be established by the lowest points within the area between the building and the *lot line* or, where the *lot line* is more than 6 feet (1829 mm) from the building, between the building and a point 6 feet (1829 mm) from the building.

GRADE PLANE, STORY ABOVE. See "Story above grade plane."

GRANDSTAND. Tiered seating supported on a dedicated structural system and two or more rows high and is not a building element (see "*Bleachers*").

GROSS LEASABLE AREA. The total floor area designed for tenant occupancy and exclusive use. The area of tenant occupancy is measured from the centerlines of joint partitions to the outside of the tenant walls. All tenant areas, including areas used for storage, shall be included in calculating gross leasable area.

GROUP HOME. A facility for social rehabilitation, substance abuse or mental health problems that contains a group

housing arrangement that provides *custodial care* but does not provide medical care.

[BS] GUARD. A building component or a system of building components located at or near the open sides of elevated walking surfaces that minimizes the possibility of a fall from the walking surface to a lower level.

GUEST ROOM. A room used or intended to be used by one or more guests for living or sleeping purposes.

GYPSUM BOARD. The generic name for a family of sheet products consisting of a noncombustible core primarily of gypsum with paper surfacing. Gypsum wallboard, gypsum sheathing, gypsum base for gypsum veneer plaster, exterior gypsum soffit board, predecorated gypsum board and water-resistant gypsum backing board complying with the standards listed in Tables 2506.2, 2507.2 and Chapter 35 are types of gypsum board.

[BS] GYPSUM PANEL PRODUCT. The general name for a family of sheet products consisting essentially of gypsum.

[BS] GYPSUM PLASTER. A mixture of calcined gypsum or calcined gypsum and lime and aggregate and other *approved* materials as specified in this code.

[BS] GYPSUM VENEER PLASTER. *Gypsum plaster* applied to an *approved* base in one or more coats normally not exceeding $^1/_4$ inch (6.4 mm) in total thickness.

HABITABLE SPACE. A space in a building for living, sleeping, eating or cooking. Bathrooms, toilet rooms, closets, halls, storage or utility spaces and similar areas are not considered habitable spaces.

[F] HALOGENATED EXTINGUISHING SYSTEM. A fire-extinguishing system using one or more atoms of an element from the halogen chemical series: fluorine, chlorine, bromine and iodine.

[F] HANDLING. The deliberate transport by any means to a point of storage or *use*.

[BS] HANDRAIL. A horizontal or sloping rail intended for grasping by the hand for guidance or support.

HARDBOARD. A fibrous-felted, homogeneous panel made from lignocellulosic fibers consolidated under heat and pressure in a hot press to a density not less than 31 pcf (497 kg/m^3).

HARDWARE. See "Fire exit hardware" and "Panic hardware."

[F] HAZARDOUS MATERIALS. Those chemicals or substances that are *physical hazards* or *health hazards* as classified in Section 307 and the *International Fire Code*, whether the materials are in usable or waste condition.

[F] HAZARDOUS PRODUCTION MATERIAL (HPM). A *solid*, *liquid* or gas associated with semiconductor manufacturing that has a degree-of-hazard rating in health, flammability or instability of Class 3 or 4 as ranked by NFPA 704 and which is *used* directly in research, laboratory or production processes which have as their end product materials that are not hazardous.

[BS] HEAD JOINT. Vertical *mortar joint* placed between *masonry units* within the *wythe* at the time the *masonry units* are laid.

[F] HEALTH HAZARD. A classification of a chemical for which there is statistically significant evidence that acute or chronic health effects are capable of occurring in exposed persons. The term "health hazard" includes chemicals that are *toxic* or *highly toxic*, and *corrosive*.

HEAT DETECTOR. See "Detector, heat."

HEIGHT, BUILDING. The vertical distance from *grade plane* to the average height of the highest roof surface.

HELICAL PILE. Manufactured steel deep foundation element consisting of a central shaft and one or more helical bearing plates. A helical pile is installed by rotating it into the ground. Each helical bearing plate is formed into a screw thread with a uniform defined pitch.

HELIPAD. A structural surface that is used for the landing, taking off, taxiing and parking of helicopters.

HELIPORT. An area of land or water or a structural surface that is used, or intended for use, for the landing and taking off of helicopters, and any appurtenant areas that are used, or intended for use, for heliport buildings or other heliport facilities.

HELISTOP. The same as "heliport," except that no fueling, defueling, maintenance, repairs or storage of helicopters is permitted.

HIGH-PRESSURE DECORATIVE EXTERIOR-GRADE COMPACT LAMINATE (HPL). Panels consisting of layers of cellulose fibrous material impregnated with thermosetting resins and bonded together by a high-pressure process to form a homogeneous nonporous core suitable for exterior use.

HIGH-PRESSURE DECORATIVE EXTERIOR-GRADE COMPACT LAMINATE (HPL) SYSTEM. An *exterior wall covering* fabricated using HPL in a specific assembly including *joints*, seams, attachments, substrate, framing and other details as appropriate to a particular design.

HIGH-RISE BUILDING. A building with an occupied floor located more than 75 feet (22 860 mm) above the lowest level of fire department vehicle access.

[F] HIGHLY TOXIC. A material which produces a lethal dose or lethal concentration that falls within any of the following categories:

1. A chemical that has a median lethal dose (LD_{50}) of 50 milligrams or less per kilogram of body weight when administered orally to albino rats weighing between 200 and 300 grams each.
2. A chemical that has a median lethal dose (LD_{50}) of 200 milligrams or less per kilogram of body weight when administered by continuous contact for 24 hours (or less if death occurs within 24 hours) with the bare skin of albino rabbits weighing between 2 and 3 kilograms each.
3. A chemical that has a median lethal concentration (LC_{50}) in air of 200 parts per million by volume or less

of gas or vapor, or 2 milligrams per liter or less of mist, fume or dust, when administered by continuous inhalation for 1 hour (or less if death occurs within 1 hour) to albino rats weighing between 200 and 300 grams each.

Mixtures of these materials with ordinary materials, such as water, might not warrant classification as *highly toxic.* While this system is basically simple in application, any hazard evaluation that is required for the precise categorization of this type of material shall be performed by experienced, technically competent persons.

[A] HISTORIC BUILDINGS. Buildings that are listed in or eligible for listing in the National Register of Historic Places, or designated as historic under an appropriate state or local law.

[BF] HORIZONTAL ASSEMBLY. A fire-resistance-rated floor or *roof assembly* of materials designed to restrict the spread of fire in which continuity is maintained.

HORIZONTAL EXIT. An *exit* component consisting of fire-resistance-rated construction and opening protectives intended to compartmentalize portions of a building thereby creating refuge areas that afford safety from the fire and smoke from the area of fire origin.

HOSPITALS AND PSYCHIATRIC HOSPITALS. Facilities that provide care or treatment for the medical, psychiatric, obstetrical, or surgical treatment of care recipients who are *incapable of self-preservation.*

HOUSING UNIT. A *dormitory* or a group of *cells* with a common dayroom in Group I-3.

[F] HPM ROOM. A room used in conjunction with or serving a Group H-5 occupancy, where *HPM* is stored or *used* and which is classified as a Group H-2, H-3 or H-4 occupancy.

[BS] HURRICANE-PRONE REGIONS. Areas vulnerable to hurricanes defined as:

1. The U. S. Atlantic Ocean and Gulf of Mexico coasts where the ultimate design wind speed, V_{ult}, for Risk Category buildings is greater than 115 mph (51.4 m/s);
2. Hawaii, Puerto Rico, Guam, Virgin Islands and American Samoa.

[F] HYDROGEN FUEL GAS ROOM. A room or space that is intended exclusively to house a *gaseous hydrogen system.*

[BS] ICE-SENSITIVE STRUCTURE. A structure for which the effect of an atmospheric ice *load* governs the design of a structure or portion thereof. This includes, but is not limited to, lattice structures, guyed masts, overhead lines, light suspension and cable-stayed bridges, aerial cable systems (e.g., for ski lifts or logging operations), amusement rides, open catwalks and platforms, flagpoles and signs.

[F] IMMEDIATELY DANGEROUS TO LIFE AND HEALTH (IDLH). The concentration of air-borne contaminants which poses a threat of death, immediate or delayed permanent adverse health effects, or effects that could prevent escape from such an environment. This contaminant concentration level is established by the National Institute of Occupational Safety and Health (NIOSH) based on both toxicity and flammability. It generally is expressed in parts per million by volume (ppmv/v) or milligrams per cubic meter (mg/m^3). If adequate data do not exist for precise establishment of IDLH concentrations, an independent certified industrial hygienist, industrial toxicologist, appropriate regulatory agency or other source *approved* by the *building official* shall make such determination.

[BS] IMPACT LOAD. The *load* resulting from moving machinery, elevators, craneways, vehicles and other similar forces and kinetic *loads*, pressure and possible surcharge from fixed or moving *loads.*

INCAPABLE OF SELF-PRESERVATION. Persons who, because of age, physical limitations, mental limitations, chemical dependency or medical treatment, cannot respond as an individual to an emergency situation.

[F] INCOMPATIBLE MATERIALS. Materials that, when mixed, have the potential to react in a manner that generates heat, fumes, gases or byproducts which are hazardous to life or property.

[F] INERT GAS. A gas that is capable of reacting with other materials only under abnormal conditions such as high temperatures, pressures and similar extrinsic physical forces. Within the context of the code, inert gases do not exhibit either physical or health hazard properties as defined (other than acting as a simple asphyxiant) or hazard properties other than those of a *compressed gas.* Some of the more common inert gases include argon, helium, krypton, neon, nitrogen and xenon.

[F] INITIATING DEVICE. A system component that originates transmission of a change-of-state condition, such as in a *smoke detector, manual fire alarm box* or supervisory switch.

INTENDED TO BE OCCUPIED AS A RESIDENCE. This refers to a *dwelling unit* or *sleeping unit* that can or will be used all or part of the time as the occupant's place of abode.

INTERIOR EXIT RAMP. An *exit* component that serves to meet one or more *means of egress* design requirements, such as required number of *exits* or *exit access* travel distance, and provides for a protected path of egress travel to the *exit discharge* or *public way.*

INTERIOR EXIT STAIRWAY. An *exit* component that serves to meet one or more *means of egress* design requirements, such as required number of *exits* or *exit access* travel distance, and provides for a protected path of egress travel to the *exit discharge* or *public way.*

INTERIOR FINISH. Interior finish includes *interior wall and ceiling finish* and *interior floor finish.*

INTERIOR FLOOR FINISH. The exposed floor surfaces of buildings including coverings applied over a finished floor or *stair*, including risers.

INTERIOR FLOOR-WALL BASE. *Interior floor finish trim* used to provide a functional or decorative border at the intersection of walls and floors.

INTERIOR SURFACES. Surfaces other than weather exposed surfaces.

INTERIOR WALL AND CEILING FINISH. The exposed *interior surfaces* of buildings, including but not limited to: fixed or movable walls and partitions; toilet room privacy partitions; columns; ceilings; and interior wainscoting, paneling or other finish applied structurally or for decoration, acoustical correction, surface insulation, structural fire resistance or similar purposes, but not including *trim*.

[BS] INTERLAYMENT. A layer of felt or nonbituminous saturated felt not less than 18 inches (457 mm) wide, shingled between each course of a wood-shake *roof covering*.

INTUMESCENT FIRE-RESISTANT COATINGS. Thin film liquid mixture applied to substrates by brush, roller, spray or trowel which expands into a protective foamed layer to provide fire-resistant protection of the substrates when exposed to flame or intense heat.

[BS] JOINT. The opening in or between adjacent assemblies that is created due to building tolerances, or is designed to allow independent movement of the building in any plane caused by thermal, seismic, wind or any other loading.

[A] JURISDICTION. The governmental unit that has adopted this code under due legislative authority.

L RATING. The air leakage rating of a *through penetration firestop system* or a fire-resistant *joint* system when tested in accordance with UL 1479 or UL 2079, respectively.

[A] LABEL. An identification applied on a product by the manufacturer that contains the name of the manufacturer, the function and performance characteristics of the product or material and the name and identification of an *approved agency*, and that indicates that the representative sample of the product or material has been tested and evaluated by an *approved agency* (see Section 1703.5, "Manufacturer's designation" and "Mark").

[A] LABELED. Equipment, materials or products to which has been affixed a *label*, seal, symbol or other identifying *mark* of a nationally recognized testing laboratory, *approved* agency or other organization concerned with product evaluation that maintains periodic inspection of the production of the above-labeled items and whose labeling indicates either that the equipment, material or product meets identified standards or has been tested and found suitable for a specified purpose.

LEVEL OF EXIT DISCHARGE. See "Exit discharge, level of."

LIGHT-DIFFUSING SYSTEM. Construction consisting in whole or in part of lenses, panels, grids or baffles made with light-transmitting plastics positioned below independently mounted electrical light sources, skylights or light-transmitting plastic roof panels. Lenses, panels, grids and baffles that are part of an electrical fixture shall not be considered as a light-diffusing system.

LIGHT-FRAME CONSTRUCTION. A type of construction whose vertical and horizontal structural elements are primarily formed by a system of repetitive wood or cold-formed steel framing members.

LIGHT-TRANSMITTING PLASTIC ROOF PANELS. Structural plastic panels other than skylights that are fastened to structural members, or panels or sheathing and that are used as light-transmitting media in the plane of the roof.

LIGHT-TRANSMITTING PLASTIC WALL PANELS. Plastic materials that are fastened to structural members, or to structural panels or sheathing, and that are used as light-transmitting media in *exterior walls*.

[BS] LIMIT OF MODERATE WAVE ACTION. Line shown on FIRMs to indicate the inland limit of the $1^1/_2$-foot (457 mm) breaking wave height during the base flood.

[BS] LIMIT STATE. A condition beyond which a structure or member becomes unfit for service and is judged to be no longer useful for its intended function (serviceability limit state) or to be unsafe (strength limit state).

[F] LIQUID. A material that has a melting point that is equal to or less than 68°F (20°C) and a *boiling point* that is greater than 68°F (20°C) at 14.7 pounds per square inch absolute (psia) (101 kPa). When not otherwise identified, the term "liquid" includes both *flammable* and *combustible liquids*.

[F] LIQUID STORAGE ROOM. A room classified as a Group H-3 occupancy used for the storage of *flammable* or *combustible liquids* in a closed condition.

[F] LIQUID USE, DISPENSING AND MIXING ROOM. A room in which Class I, II and IIIA *flammable* or *combustible liquids* are *used*, dispensed or mixed in open containers.

[A] LISTED. Equipment, materials, products or services included in a list published by an organization acceptable to the *building* official and concerned with evaluation of products or services that maintains periodic inspection of production of listed equipment or materials or periodic evaluation of services and whose listing states either that the equipment, material, product or service meets identified standards or has been tested and found suitable for a specified purpose.

LIVE/WORK UNIT. A *dwelling unit* or *sleeping unit* in which a significant portion of the space includes a nonresidential use that is operated by the tenant.

[BS] LIVE LOAD. A *load* produced by the use and occupancy of the building or other structure that does not include construction or environmental *loads* such as wind load, snow load, rain load, earthquake load, flood load or *dead load*.

[BS] LIVE LOAD, ROOF. A *load* on a roof produced:

1. During maintenance by workers, equipment and materials;
2. During the life of the structure by movable objects such as planters or other similar small decorative appurtenances that are not occupancy related; or
3. By the use and occupancy of the roof such as for roof gardens or assembly areas.

[BS] LOAD AND RESISTANCE FACTOR DESIGN (LRFD). A method of proportioning structural members and their connections using load and *resistance factors* such that no applicable *limit state* is reached when the structure is subjected to appropriate *load* combinations. The term "LRFD" is used in the design of steel and wood structures.

[BS] LOAD EFFECTS. Forces and deformations produced in structural members by the applied *loads*.

[BS] LOAD FACTOR. A factor that accounts for deviations of the actual *load* from the *nominal load*, for uncertainties in the analysis that transforms the *load* into a *load effect*, and for the probability that more than one extreme *load* will occur simultaneously.

[BS] LOADS. Forces or other actions that result from the weight of building materials, occupants and their possessions, environmental effects, differential movement and restrained dimensional changes. Permanent loads are those loads in which variations over time are rare or of small magnitude, such as *dead loads*. All other loads are variable loads (see "*Nominal loads*").

LODGING HOUSE. A one-family dwelling where one or more occupants are primarily permanent in nature and rent is paid for guest rooms.

[A] LOT. A portion or parcel of land considered as a unit.

[A] LOT LINE. A line dividing one lot from another, or from a street or any public place.

LOW-ENERGY POWER-OPERATED DOOR. Swinging door which opens automatically upon an action by a pedestrian such as pressing a push plate or waving a hand in front of a sensor. The door closes automatically, and operates with decreased forces and decreased speeds (see "Power-assisted door" and "Power-operated door").

[F] LOWER FLAMMABLE LIMIT (LFL). The minimum concentration of vapor in air at which propagation of flame will occur in the presence of an ignition source. The LFL is sometimes referred to as "LEL" or "lower explosive limit."

LOWEST FLOOR. The floor of the lowest enclosed area, including *basement*, but excluding any unfinished or flood-resistant enclosure, usable solely for vehicle parking, building access or limited storage provided that such enclosure is not built so as to render the structure in violation of Section 1612.

[BS] MAIN WINDFORCE-RESISTING SYSTEM. An assemblage of structural elements assigned to provide support and stability for the overall structure. The system generally receives wind loading from more than one surface

MALL BUILDING, COVERED and MALL BUILDING, OPEN. See "Covered mall building."

[F] MANUAL FIRE ALARM BOX. A manually operated device used to initiate an *alarm signal*.

[A] MANUFACTURER'S DESIGNATION. An identification applied on a product by the manufacturer indicating that a product or material complies with a specified standard or set of rules (see "*Label*" and "*Mark*").

[A] MARK. An identification applied on a product by the manufacturer indicating the name of the manufacturer and the function of a product or material (see "*Label*" and "Manufacturer's designation").

MARQUEE. A *canopy* that has a top surface which is sloped less than 25 degrees from the horizontal and is located less than 10 feet (3048 mm) from operable openings above or adjacent to the level of the marquee.

[BS] MASONRY. A built-up construction or combination of building units or materials of clay, shale, concrete, glass, gypsum, stone or other *approved* units bonded together with or without *mortar* or grout or other accepted methods of joining.

Glass unit masonry. Masonry composed of glass units bonded by *mortar*.

Plain masonry. Masonry in which the tensile resistance of the masonry is taken into consideration and the effects of stresses in reinforcement are neglected.

Reinforced masonry. Masonry construction in which reinforcement acting in conjunction with the masonry is used to resist forces.

Solid masonry. Masonry consisting of solid masonry units laid contiguously with the *joints* between the units filled with *mortar*.

Unreinforced (plain) masonry. Masonry in which the tensile resistance of masonry is taken into consideration and the resistance of the reinforcing steel, if present, is neglected.

[BS] MASONRY UNIT. *Brick*, tile, stone, glass block or concrete block conforming to the requirements specified in Section 2103.

Hollow. A masonry unit whose net cross-sectional *area* in any plane parallel to the load-bearing surface is less than 75 percent of its gross cross-sectional *area* measured in the same plane.

Solid. A masonry unit whose net cross-sectional *area* in every plane parallel to the load-bearing surface is 75 percent or more of its gross cross-sectional *area* measured in the same plane.

MASTIC FIRE-RESISTANT COATINGS. Liquid mixture applied to a substrate by brush, roller, spray or trowel that provides fire-resistant protection of a substrate when exposed to flame or intense heat.

MEANS OF EGRESS. A continuous and unobstructed path of vertical and horizontal egress travel from any occupied portion of a building or structure to a *public way*. A means of egress consists of three separate and distinct parts: the *exit access*, the *exit* and the *exit discharge*.

MECHANICAL-ACCESS OPEN PARKING GARAGES. *Open parking garages* employing parking machines, lifts, elevators or other mechanical devices for vehicles moving from and to street level and in which public occupancy is prohibited above the street level.

MECHANICAL EQUIPMENT SCREEN. A rooftop structure, not covered by a roof, used to aesthetically conceal plumbing, electrical or mechanical equipment from view.

MEDICAL CARE. Care involving medical or surgical procedures, nursing or for psychiatric purposes.

MEMBRANE-COVERED CABLE STRUCTURE. A nonpressurized structure in which a mast and cable system provides support and tension to the membrane weather barrier and the membrane imparts stability to the structure.

MEMBRANE-COVERED FRAME STRUCTURE. A nonpressurized building wherein the structure is composed of

a rigid framework to support a tensioned membrane which provides the weather barrier.

MEMBRANE PENETRATION. A breach in one side of a floor-ceiling, roof-ceiling or wall assembly to accommodate an item installed into or passing through the breach.

MEMBRANE-PENETRATION FIRESTOP. A material, device or construction installed to resist for a prescribed time period the passage of flame and heat through openings in a protective membrane in order to accommodate cables, cable trays, conduit, tubing, pipes or similar items.

MEMBRANE-PENETRATION FIRESTOP SYSTEM. An assemblage consisting of a fire-resistance-rated floor-ceiling, roof-ceiling or wall assembly, one or more penetrating items installed into or passing through the breach in one side of the assembly and the materials or devices, or both, installed to resist the spread of fire into the assembly for a prescribed period of time.

MERCHANDISE PAD. A merchandise pad is an area for display of merchandise surrounded by *aisles*, permanent fixtures or walls. Merchandise pads contain elements such as nonfixed and moveable fixtures, cases, racks, counters and partitions as indicated in Section 105.2 from which customers browse or shop.

METAL COMPOSITE MATERIAL (MCM). A factory-manufactured panel consisting of metal skins bonded to both faces of a solid plastic core.

METAL COMPOSITE MATERIAL (MCM) SYSTEM. An *exterior wall covering* fabricated using MCM in a specific assembly including *joints,* seams, attachments, substrate, framing and other details as appropriate to a particular design.

[BS] METAL ROOF PANEL. An interlocking metal sheet having a minimum installed weather exposure of 3 square feet (0.279 m^2) per sheet.

[BS] METAL ROOF SHINGLE. An interlocking metal sheet having an installed weather exposure less than 3 square feet (0.279 m^2) per sheet.

MEZZANINE. An intermediate level or levels between the floor and ceiling of any *story* and in accordance with Section 505.

[BS] MICROPILE. A micropile is a bored, grouted-in-place *deep foundation* element that develops its load-carrying capacity by means of a bond zone in soil, bedrock or a combination of soil and bedrock.

MINERAL BOARD. A rigid felted thermal insulation board consisting of either felted *mineral fiber* or cellular beads of expanded aggregate formed into flat rectangular units.

MINERAL FIBER. Insulation composed principally of fibers manufactured from rock, slag or glass, with or without binders.

MINERAL WOOL. Synthetic vitreous fiber insulation made by melting predominately igneous rock or furnace slag, and other inorganic materials, and then physically forming the melt into fibers.

[BS] MODIFIED BITUMEN ROOF COVERING. One or more layers of polymer-modified asphalt sheets. The sheet materials shall be fully adhered or mechanically attached to the substrate or held in place with an *approved* ballast layer.

[BS] MORTAR. A mixture consisting of cementitious materials, fine aggregates, water, with or without admixtures, that is used to construct unit masonry assemblies.

[BS] MORTAR, SURFACE-BONDING. A mixture to bond concrete *masonry units* that contains hydraulic cement, glass fiber reinforcement with or without inorganic fillers or organic modifiers and water.

MULTILEVEL ASSEMBLY SEATING. Seating that is arranged in distinct levels where each level is comprised of either multiple rows, or a single row of box seats accessed from a separate level.

[F] MULTIPLE-STATION ALARM DEVICE. Two or more single-station alarm devices that can be interconnected such that actuation of one causes all integral or separate audible alarms to operate. A multiple-station alarm device can consist of one single-station alarm device having connections to other detectors or to a *manual fire alarm box.*

[F] MULTIPLE-STATION SMOKE ALARM. Two or more single-station alarm devices that are capable of interconnection such that actuation of one causes the appropriate *alarm signal* to operate in all interconnected alarms.

MULTISTORY UNIT. A *dwelling unit* or *sleeping unit* with *habitable space* located on more than one *story*.

[BS] NAILING, BOUNDARY. A special nailing pattern required by design at the boundaries of *diaphragms.*

[BS] NAILING, EDGE. A special nailing pattern required by design at the edges of each panel within the assembly of a *diaphragm* or *shear wall.*

[BS] NAILING, FIELD. Nailing required between the sheathing panels and framing members at locations other than *boundary nailing* and *edge nailing.*

[BS] NATURALLY DURABLE WOOD. The heartwood of the following species except for the occasional piece with corner sapwood, provided 90 percent or more of the width of each side on which it occurs is heartwood.

Decay resistant. Redwood, cedar, black locust and black walnut.

Termite resistant. Redwood, Alaska yellow cedar, Eastern red cedar and Western red cedar.

[BS] NOMINAL LOADS. The magnitudes of the *loads* specified in Chapter 16 (dead, live, soil, wind, snow, rain, *flood* and earthquake).

[BS] NOMINAL SIZE (LUMBER). The commercial size designation of width and depth, in standard sawn lumber and glued-laminated lumber *grades*; somewhat larger than the standard net size of dressed lumber, in accordance with DOCPS 20 for sawn lumber and with the AWC NDS for glued-laminated lumber.

NONCOMBUSTIBLE MEMBRANE STRUCTURE. A membrane structure in which the membrane and all component parts of the structure are noncombustible.

[BS] NONSTRUCTURAL CONCRETE. Any element made of plain or reinforced concrete that is not part of a structural system required to transfer either gravity or lateral loads to the ground.

[F] NORMAL TEMPERATURE AND PRESSURE (NTP). A temperature of 70°F (21°C) and a pressure of 1 atmosphere [14.7 psia (101 kPa)].

NOSING. The leading edge of treads of *stairs* and of landings at the top of *stairway flights*.

NOTIFICATION ZONE. See "Zone, notification."

[F] NUISANCE ALARM. An alarm caused by mechanical failure, malfunction, improper installation or lack of proper maintenance, or an alarm activated by a cause that cannot be determined.

NURSING HOMES. Facilities that provide care, including both intermediate care facilities and skilled nursing facilities where any of the persons are *incapable of self-preservation*.

OCCUPANT LOAD. The number of persons for which the *means of egress* of a building or portion thereof is designed.

OCCUPIABLE SPACE. A room or enclosed space designed for human occupancy in which individuals congregate for amusement, educational or similar purposes or in which occupants are engaged at labor, and which is equipped with *means of egress* and light and *ventilation* facilities meeting the requirements of this code.

OPEN-ENDED CORRIDOR. An interior corridor that is open on each end and connects to an exterior *stairway* or *ramp* at each end with no intervening doors or separation from the corridor.

OPEN PARKING GARAGE. A structure or portion of a structure with the openings as described in Section 406.5.2 on two or more sides that is used for the parking or storage of private motor vehicles as described in Section 406.5.3.

[F] OPEN SYSTEM. The *use* of a *solid* or *liquid hazardous material* involving a vessel or system that is continuously open to the atmosphere during normal operations and where vapors are liberated, or the product is exposed to the atmosphere during normal operations. Examples of open systems for *solids* and *liquids* include dispensing from or into open beakers or containers, dip tank and plating tank operations.

[F] OPERATING BUILDING. A building occupied in conjunction with the manufacture, transportation or *use* of explosive materials. Operating buildings are separated from one another with the use of intraplant or intraline distances.

[BS] ORDINARY PRECAST STRUCTURAL WALL. See Section 1905.1.1.

[BS] ORDINARY REINFORCED CONCRETE STRUCTURAL WALL. See Section 1905.1.1.

[BS] ORDINARY STRUCTURAL PLAIN CONCRETE WALL. See Section 1905.1.1.

[F] ORGANIC PEROXIDE. An organic compound that contains the bivalent -O-O- structure and which may be considered to be a structural derivative of hydrogen peroxide where one or both of the hydrogen atoms have been replaced by an organic radical. Organic peroxides can pose an *explosion* hazard (*detonation* or *deflagration*) or they can be shock sensitive. They can also decompose into various unstable compounds over an extended period of time.

Class I. Those formulations that are capable of *deflagration* but not *detonation*.

Class II. Those formulations that burn very rapidly and that pose a moderate reactivity hazard.

Class III. Those formulations that burn rapidly and that pose a moderate reactivity hazard.

Class IV. Those formulations that burn in the same manner as ordinary combustibles and that pose a minimal reactivity hazard.

Class V. Those formulations that burn with less intensity than ordinary combustibles or do not sustain combustion and that pose no reactivity hazard.

Unclassified detonable. Organic peroxides that are capable of *detonation*. These peroxides pose an extremely high *explosion* hazard through rapid explosive decomposition.

[BS] ORTHOGONAL. To be in two horizontal directions, at 90 degrees (1.57 rad) to each other.

[BS] OTHER STRUCTURES (for Chapters 16-23). Structures, other than buildings, for which *loads* are specified in Chapter 16.

OUTPATIENT CLINIC. See "Clinic, outpatient."

[A] OWNER. Any person, agent, operator, entity, firm or corporation having any legal or equitable interest in the property; or recorded in the official records of the state, county or municipality as holding an interest or title to the property; or otherwise having possession or control of the property, including the guardian of the estate of any such person, and the executor or administrator of the estate of such person if ordered to take possession of real property by a court.

[F] OXIDIZER. A material that readily yields oxygen or other *oxidizing gas*, or that readily reacts to promote or initiate combustion of combustible materials and, if heated or contaminated, can result in vigorous self-sustained decomposition.

Class 4. An oxidizer that can undergo an explosive reaction due to contamination or exposure to thermal or physical shock and that causes a severe increase in the burning rate of combustible materials with which it comes into contact. Additionally, the oxidizer causes a severe increase in the burning rate and can cause spontaneous ignition of combustibles.

Class 3. An oxidizer that causes a severe increase in the burning rate of combustible materials with which it comes in contact.

Class 2. An oxidizer that will cause a moderate increase in the burning rate of combustible materials with which it comes in contact.

Class 1. An oxidizer that does not moderately increase the burning rate of combustible materials.

[F] OXIDIZING GAS. A gas that can support and accelerate combustion of other materials more than air does.

[BS] PANEL (PART OF A STRUCTURE). The section of a floor, wall or roof comprised between the supporting frame of two adjacent rows of columns and girders or column bands of floor or roof construction.

PANIC HARDWARE. A door-latching assembly incorporating a device that releases the latch upon the application of a force in the direction of egress travel. See "Fire exit hardware."

[BS] PARTICLEBOARD. A generic term for a panel primarily composed of cellulosic materials (usually wood), generally in the form of discrete pieces or particles, as distinguished from fibers. The cellulosic material is combined with synthetic resin or other suitable bonding system by a process in which the interparticle bond is created by the bonding system under heat and pressure.

PENETRATION FIRESTOP. A through-penetration firestop or a *membrane-penetration firestop*.

PENTHOUSE. An enclosed, unoccupied rooftop structure used for sheltering mechanical and electrical equipment, tanks, elevators and related machinery, and vertical *shaft* openings.

[BS] PERFORMANCE CATEGORY. A designation of wood structural panels as related to the panel performance used in Chapter 23.

[A] PERMIT. An official document or certificate issued by the *building official* that authorizes performance of a specified activity.

[A] PERSON. An individual, heirs, executors, administrators or assigns, and also includes a firm, partnership or corporation, its or their successors or assigns, or the agent of any of the aforesaid.

PERSONAL CARE SERVICE. The care of persons who do not require *medical care*. Personal care involves responsibility for the safety of the persons while inside the building

PHOTOLUMINESCENT. Having the property of emitting light that continues for a length of time after excitation by visible or invisible light has been removed.

PHOTOVOLTAIC MODULE. A complete, environmentally protected unit consisting of solar cells, optics and other components, exclusive of tracker, designed to generate DC power when exposed to sunlight.

PHOTOVOLTAIC PANEL. A collection of modules mechanically fastened together, wired and designed to provide a field-installable unit.

PHOTOVOLTAIC PANEL SYSTEM. A system that incorporates discrete photovoltaic panels, that converts solar radiation into electricity, including rack support systems.

PHOTOVOLTAIC SHINGLES. A *roof covering* resembling shingles that incorporates photovoltaic modules.

[F] PHYSICAL HAZARD. A chemical for which there is evidence that it is a *combustible liquid*, *cryogenic fluid*, *explosive*, flammable (*solid*, *liquid* or gas), *organic peroxide* (*solid* or *liquid*), *oxidizer* (*solid* or *liquid*), *oxidizing gas*, *pyrophoric* (*solid*, *liquid* or gas), *unstable (reactive) material* (*solid*, *liquid* or gas) or *water-reactive material* (*solid* or *liquid*).

[F] PHYSIOLOGICAL WARNING THRESHOLD LEVEL. A concentration of air-borne contaminants, normally expressed in parts per million (ppm) or milligrams per cubic meter (mg/m^3), that represents the concentration at which persons can sense the presence of the contaminant due to odor, irritation or other quick-acting physiological response. When used in conjunction with the permissible exposure limit (PEL) the physiological warning threshold levels are those consistent with the classification system used to establish the PEL. See the definition of "Permissible exposure limit (PEL)" in the *International Fire Code*.

PLACE OF RELIGIOUS WORSHIP. See "Religious worship, place of."

PLASTIC, APPROVED. Any thermoplastic, thermosetting or reinforced thermosetting plastic material that conforms to combustibility classifications specified in the section applicable to the application and plastic type.

PLASTIC COMPOSITE. A generic designation that refers to wood/plastic composites and plastic lumber.

PLASTIC GLAZING. Plastic materials that are glazed or set in frame or sash and not held by mechanical fasteners that pass through the glazing material.

[BS] PLASTIC LUMBER. A manufactured product made primarily of plastic materials (filled or unfilled) which is generally rectangular in cross section.

PLATFORM. A raised area within a building used for worship, the presentation of music, plays or other entertainment; the head table for special guests; the raised area for lecturers and speakers; boxing and wrestling rings; theater-in-the-round *stages*; and similar purposes wherein, other than horizontal sliding curtains, there are no overhead hanging curtains, drops, scenery or stage effects other than lighting and sound. A temporary platform is one installed for not more than 30 days.

POLYPROPYLENE SIDING. A shaped material, made principally from polypropylene homopolymer, or copolymer, which in some cases contains fillers or reinforcements, that is used to clad *exterior walls* of buildings.

[BS] PORCELAIN TILE. Tile that conforms to the requirements of ANSI 137.1.3 for ceramic tile having an absorption of 0.5 percent or less in accordance with ANSI 137.4.1–Class Table and ANSI 137.1.6.1 Allowable Properties by Tile Type–Table 10.

[BS] POSITIVE ROOF DRAINAGE. The drainage condition in which consideration has been made for all loading deflections of the *roof deck*, and additional slope has been provided to ensure drainage of the roof within 48 hours of precipitation.

POWER-ASSISTED DOOR. Swinging door which opens by reduced pushing or pulling force on the door-operating hardware. The door closes automatically after the pushing or pulling force is released and functions with decreased forces. See "Low-energy power-operated door" and "Power-operated door."

POWER-OPERATED DOOR. Swinging, sliding, or folding door which opens automatically when approached by a pedestrian or opens automatically upon an action by a pedestrian. The door closes automatically and includes provisions such as presence sensors to prevent entrapment. See "Low energy power-operated door" and "Power-assisted door."

[BS] PREFABRICATED WOOD I-JOIST. Structural member manufactured using sawn or structural composite lumber flanges and wood structural panel webs bonded together with exterior exposure adhesives, which forms an "I" cross-sectional shape.

[BS] PRESTRESSED MASONRY. *Masonry* in which internal stresses have been introduced to counteract potential tensile stresses in *masonry* resulting from applied *loads*.

➡ **PRIMARY STRUCTURAL FRAME.** The primary structural frame shall include all of the following structural members:

1. The columns.
2. Structural members having direct connections to the columns, including girders, beams, trusses and spandrels.
3. Members of the floor construction and roof construction having direct connections to the columns.
4. Bracing members that are essential to the vertical stability of the primary structural frame under gravity loading shall be considered part of the primary structural frame whether or not the bracing member carries gravity *loads*.

➡ **PRIVATE GARAGE.** A building or portion of a building in which motor vehicles used by the tenants of the building or buildings on the premises are stored or kept, without provisions for repairing or servicing such vehicles for profit.

PROSCENIUM WALL. The wall that separates the *stage* from the auditorium or assembly seating area.

PSYCHIATRIC HOSPITALS. See "Hospitals."

PUBLIC ENTRANCE. An entrance that is not a *service entrance* or a *restricted entrance*.

PUBLIC-USE AREAS. Interior or exterior rooms or spaces that are made available to the general public.

[A] PUBLIC WAY. A street, alley or other parcel of land open to the outside air leading to a street, that has been deeded, dedicated or otherwise permanently appropriated to the public for public use and which has a clear width and height of not less than 10 feet (3048 mm).

[F] PYROPHORIC. A chemical with an auto-ignition temperature in air, at or below a temperature of 130°F (54.4°C).

[F] PYROTECHNIC COMPOSITION. A chemical mixture that produces visible light displays or sounds through a self-propagating, heat-releasing chemical reaction which is initiated by ignition.

RADIANT BARRIER. A material having a low-emittance surface of 0.1 or less installed in building assemblies.

RAMP. A walking surface that has a running slope steeper than one unit vertical in 20 units horizontal (5-percent slope).

RAMP-ACCESS OPEN PARKING GARAGES. *Open parking garages* employing a series of continuously rising floors or a series of interconnecting ramps between floors permitting the movement of vehicles under their own power from and to the street level.

RAMP, EXIT ACCESS. See "Exit access ramp."

RAMP, EXTERIOR EXIT. See "Exterior exit ramp."

RAMP, INTERIOR EXIT. See "Interior exit ramp."

[A] RECORD DRAWINGS. Drawings ("as builts") that document the location of all devices, appliances, wiring sequences, wiring methods and connections of the components of a *fire alarm system* as installed.

REFLECTIVE PLASTIC CORE INSULATION. An insulation material packaged in rolls, that is less than $^1/_2$ inch (12.7 mm) thick, with not less than one exterior low-emittance surface (0.1 or less) and a core material containing voids or cells.

[A] REGISTERED DESIGN PROFESSIONAL. An individual who is registered or licensed to practice their respective design profession as defined by the statutory requirements of the professional registration laws of the state or *jurisdiction* in which the project is to be constructed.

[A] REGISTERED DESIGN PROFESSIONAL IN RESPONSIBLE CHARGE. A *registered design professional* engaged by the owner or the owner's authorized agent to review and coordinate certain aspects of the project, as determined by the *building official*, for compatibility with the design of the building or structure, including submittal documents prepared by others, deferred submittal documents and phased submittal documents.

RELIGIOUS WORSHIP, PLACE OF. A building or portion thereof intended for the performance of religious services.

[A] REPAIR. The reconstruction or renewal of any part of an existing building for the purpose of its maintenance or to correct damage.

[EB] REROOFING. The process of recovering or replacing an existing *roof covering*. See "Roof recover" and "Roof replacement."

RESIDENTIAL AIRCRAFT HANGAR. An accessory building less than 2,000 square feet (186 m^2) and 20 feet (6096 mm) in *building height* constructed on a one- or two-family property where aircraft are stored. Such use will be considered as a residential accessory use incidental to the dwelling.

[BS] RESISTANCE FACTOR. A factor that accounts for deviations of the actual strength from the *nominal strength* and the manner and consequences of failure (also called "strength reduction factor").

[BS] RESTRICTED ENTRANCE. An entrance that is made available for *common use* on a controlled basis, but not public use, and that is not a *service entrance*.

RETRACTABLE AWNING. A retractable *awning* is a cover with a frame that retracts against a building or other structure to which it is entirely supported.

[BS] RISK CATEGORY. A categorization of buildings and other structures for determination of *flood*, wind, snow, ice and earthquake *loads* based on the risk associated with unacceptable performance.

[BS] RISK-TARGETED MAXIMUM CONSIDERED EARTHQUAKE (MCE_R) GROUND MOTION RESPONSE ACCELERATIONS. The most severe earthquake effects considered by this code, determined for the orientation that results in the largest maximum response to horizontal ground motions and with adjustment for targeted risk.

[BS] ROOF ASSEMBLY (For application to Chapter 15 only). A system designed to provide weather protection and resistance to design *loads*. The system consists of a *roof covering* and *roof deck* or a single component serving as both the roof covering and the *roof deck*. A roof assembly includes the *roof deck*, *vapor retarder*, substrate or thermal barrier, insulation, *vapor retarder* and *roof covering*.

[BS] ROOF COVERING. The covering applied to the *roof deck* for weather resistance, fire classification or appearance.

ROOF COVERING SYSTEM. See "Roof assembly."

[BS] ROOF DECK. The flat or sloped surface constructed on top of the *exterior walls* of a building or other supports for the purpose of enclosing the *story* below, or sheltering an area, to protect it from the elements, not including its supporting members or vertical supports.

ROOF DRAINAGE, POSITIVE. See "Positive roof drainage."

[EB] ROOF RECOVER. The process of installing an additional *roof covering* over a prepared existing *roof covering* without removing the existing *roof covering*.

[EB] ROOF REPAIR. Reconstruction or renewal of any part of an existing roof for the purposes of its maintenance.

[EB] ROOF REPLACEMENT. The process of removing the existing *roof covering*, repairing any damaged substrate and installing a new *roof covering*.

ROOF VENTILATION. The natural or mechanical process of supplying conditioned or unconditioned air to, or removing such air from, *attics*, cathedral ceilings or other enclosed spaces over which a *roof assembly* is installed.

ROOFTOP STRUCTURE. A structure erected on top of the *roof deck* or on top of any part of a building.

[BS] RUNNING BOND. The placement of *masonry units* such that *head joints* in successive courses are horizontally offset at least one-quarter the unit length.

SALLYPORT. A security vestibule with two or more doors or gates where the intended purpose is to prevent continuous and unobstructed passage by allowing the release of only one door or gate at a time.

SCISSOR STAIRWAY. Two interlocking *stairways* providing two separate paths of egress located within one *exit* enclosure.

[BS] SCUPPER. An opening in a wall or parapet that allows water to drain from a roof.

SECONDARY MEMBERS. The following structural members shall be considered secondary members and not part of the *primary structural frame*:

1. Structural members not having direct connections to the columns.
2. Members of the floor construction and roof construction not having direct connections to the columns.
3. Bracing members other than those that are part of the *primary structural frame*.

[BS] SEISMIC DESIGN CATEGORY. A classification assigned to a structure based on its *risk category* and the severity of the *design earthquake ground motion* at the site.

[BS] SEISMIC FORCE-RESISTING SYSTEM. That part of the structural system that has been considered in the design to provide the required resistance to the prescribed seismic forces.

SELF-CLOSING. As applied to a *fire door* or other opening protective, means equipped with an device that will ensure closing after having been opened.

SELF-LUMINOUS. Illuminated by a self-contained power source, other than batteries, and operated independently of external power sources.

SELF-PRESERVATION, INCAPABLE OF. See "Incapable of self-preservation."

SELF-SERVICE STORAGE FACILITY. Real property designed and used for the purpose of renting or leasing individual storage spaces to customers for the purpose of storing and removing personal property on a self-service basis.

[F] SERVICE CORRIDOR. A fully enclosed passage used for transporting *HPM* and purposes other than required *means of egress*.

SERVICE ENTRANCE. An entrance intended primarily for delivery of goods or services.

SHAFT. An enclosed space extending through one or more *stories* of a building, connecting vertical openings in successive floors, or floors and roof.

SHAFT ENCLOSURE. The walls or construction forming the boundaries of a *shaft*.

[BS] SHALLOW FOUNDATION. A shallow foundation is an individual or strip footing, a mat foundation, a slab-on-grade foundation or a similar foundation element.

[BS] SHEAR WALL (for Chapter 23). A wall designed to resist lateral forces parallel to the plane of a wall.

Shear wall, perforated. A wood structural panel sheathed wall with openings, that has not been specifically designed and detailed for force transfer around openings.

Shear wall segment, perforated. A section of shear wall with full-height sheathing that meets the height-to-width ratio limits of Section 4.3.4 of AWC SDPWS.

[BS] SHINGLE FASHION. A method of installing roof or wall coverings, water-resistive barriers, flashing or other building components such that upper layers of material are placed overlapping lower layers of material to provide for drainage via gravity and moisture control.

[BS] SINGLE-PLY MEMBRANE. A roofing membrane that is field applied using one layer of membrane material (either homogeneous or composite) rather than multiple layers.

[F] SINGLE-STATION SMOKE ALARM. An assembly incorporating the detector, the control equipment and the alarm-sounding device in one unit, operated from a power supply either in the unit or obtained at the point of installation.

SITE. A parcel of land bounded by a *lot line* or a designated portion of a public right-of-way.

[BS] SITE CLASS. A classification assigned to a site based on the types of soils present and their engineering properties as defined in Section 1613.3.2.

[BS] SITE COEFFICIENTS. The values of F_a and F_v indicated in Tables 1613.3.3(1) and 1613.3.3(2), respectively.

SITE-FABRICATED STRETCH SYSTEM. A system, fabricated on site and intended for acoustical, tackable or aesthetic purposes, that is composed of three elements:

1. A frame (constructed of plastic, wood, metal or other material) used to hold fabric in place;
2. A core material (infill, with the correct properties for the application); and
3. An outside layer, composed of a textile, fabric or vinyl, that is stretched taut and held in place by tension or mechanical fasteners via the frame.

SKYLIGHT, UNIT. A factory-assembled, glazed fenestration unit, containing one panel of glazing material that allows for natural lighting through an opening in the *roof assembly* while preserving the weather-resistant barrier of the roof.

SKYLIGHTS AND SLOPED GLAZING. Glass or other transparent or translucent glazing material installed at a slope of 15 degrees (0.26 rad) or more from vertical. Glazing material in skylights, including *unit skylights*, *tubular daylighting devices*, solariums, *sunrooms*, roofs and sloped walls, are included in this definition.

SLEEPING UNIT. A room or space in which people sleep, which can also include permanent provisions for living, eating, and either sanitation or kitchen facilities but not both. Such rooms and spaces that are also part of a *dwelling unit* are not sleeping units.

[F] SMOKE ALARM. A single- or multiple-station alarm responsive to smoke. See "Multiple-station smoke alarm" and "Single-station smoke alarm."

SMOKE BARRIER. A continuous membrane, either vertical or horizontal, such as a wall, floor or ceiling assembly, that is designed and constructed to restrict the movement of smoke.

SMOKE COMPARTMENT. A space within a building enclosed by *smoke barriers* on all sides, including the top and bottom.

SMOKE DAMPER. A *listed* device installed in ducts and air transfer openings designed to resist the passage of smoke. The device is installed to operate *automatically*, controlled by a smoke detection system, and where required, is capable of being positioned from a *fire command center*.

[F] SMOKE DETECTOR. A *listed* device that senses visible or invisible particles of combustion.

SMOKE-DEVELOPED INDEX. A comparative measure, expressed as a dimensionless number, derived from measurements of smoke obscuration versus time for a material tested in accordance with ASTM E 84.

SMOKE-PROTECTED ASSEMBLY SEATING. Seating served by *means of egress* that is not subject to smoke accumulation within or under a structure.

SMOKEPROOF ENCLOSURE. An *exit stairway* designed and constructed so that the movement of the products of combustion produced by a fire occurring in any part of the building into the enclosure is limited.

[F] SOLID. A material that has a melting point, decomposes or sublimes at a temperature greater than 68°F (20°C).

SPECIAL AMUSEMENT BUILDING. A special amusement building is any temporary or permanent building or portion thereof that is occupied for amusement, entertainment or educational purposes and that contains a device or system that conveys passengers or provides a walkway along, around or over a course in any direction so arranged that the *means of egress* path is not readily apparent due to visual or audio distractions or is intentionally confounded or is not readily available because of the nature of the attraction or mode of conveyance through the building or structure.

[BS] SPECIAL FLOOD HAZARD AREA. The land area subject to flood hazards and shown on a *Flood Insurance Rate Map* or other flood hazard map as Zone A, AE, A1-30, A99, AR, AO, AH, V, VO, VE or V1-30.

[BS] SPECIAL INSPECTION. Inspection of construction requiring the expertise of an *approved special inspector* in order to ensure compliance with this code and the *approved construction documents*.

Continuous special inspection. Special inspection by the *special inspector* who is present when and where the work to be inspected is being performed.

Periodic special inspection. Special inspection by the *special inspector* who is intermittently present where the work to be inspected has been or is being performed.

[BS] SPECIAL INSPECTOR. A qualified person employed or retained by an *approved* agency and *approved* by the *building official* as having the competence necessary to inspect a particular type of construction requiring *special inspection*.

[BS] SPECIAL STRUCTURAL WALL. See Section 1905.1.1.

[BS] SPECIFIED COMPRESSIVE STRENGTH OF MASONRY, f'_m. Minimum compressive strength, expressed as force per unit of net cross-sectional area, required of the *masonry* used in construction by the *approved construction documents*, and upon which the project design is based. Whenever the quantity f'_m is under the radical sign, the square root of numerical value only is intended and the result has units of pounds per square inch (psi) (MPa).

[BS] SPLICE. The result of a factory and/or field method of joining or connecting two or more lengths of a *fire-resistant joint system* into a continuous entity.

SPORT ACTIVITY, AREA OF. See "Area of sport activity."

SPRAYED FIRE-RESISTANT MATERIALS. Cementitious or fibrous materials that are sprayed to provide fire-resistant protection of the substrates.

STAGE. A space within a building utilized for entertainment or presentations, which includes overhead hanging curtains, drops, scenery or stage effects other than lighting and sound.

STAIR. A change in elevation, consisting of one or more risers.

STAIRWAY. One or more *flights* of *stairs*, either exterior or interior, with the necessary landings and platforms connecting them, to form a continuous and uninterrupted passage from one level to another.

STAIRWAY, EXIT ACCESS. See "Exit access stairway."

STAIRWAY, EXTERIOR EXIT. See "Exterior exit stairway."

STAIRWAY, INTERIOR EXIT. See "Interior exit stairway."

STAIRWAY, SCISSOR. See "Scissor stairway."

STAIRWAY, SPIRAL. A *stairway* having a closed circular form in its plan view with uniform section-shaped treads attached to and radiating from a minimum-diameter supporting column.

[F] STANDBY POWER SYSTEM. A source of automatic electric power of a required capacity and duration to operate required building, hazardous materials or ventilation systems in the event of a failure of the primary power. Standby power systems are required for electrical loads where interruption of the primary power could create hazards or hamper rescue or fire-fighting operations.

[F] STANDPIPE SYSTEM, CLASSES OF. Standpipe classes are as follows:

Class I system. A system providing $2^1/_2$-inch (64 mm) hose connections to supply water for use by fire departments and those trained in handling heavy fire streams.

Class II system. A system providing $1^1/_2$-inch (38 mm) hose stations to supply water for use primarily by the building occupants or by the fire department during initial response.

Class III system. A system providing $1^1/_2$-inch (38 mm) hose stations to supply water for use by building occupants and $2^1/_2$-inch (64 mm) hose connections to supply a larger volume of water for use by fire departments and those trained in handling heavy fire streams.

[F] STANDPIPE, TYPES OF. Standpipe types are as follows:

Automatic dry. A dry standpipe system, normally filled with pressurized air, that is arranged through the use of a device, such as dry pipe valve, to admit water into the system piping *automatically* upon the opening of a hose valve. The water supply for an *automatic* dry standpipe system shall be capable of supplying the system demand.

Automatic wet. A wet standpipe system that has a water supply that is capable of supplying the system demand *automatically.*

Manual dry. A dry standpipe system that does not have a permanent water supply attached to the system. Manual dry standpipe systems require water from a fire department pumper to be pumped into the system through the fire department connection in order to meet the system demand.

Manual wet. A wet standpipe system connected to a water supply for the purpose of maintaining water within the system but does not have a water supply capable of delivering the system demand attached to the system. Manual-wet standpipe systems require water from a fire department pumper (or the like) to be pumped into the system in order to meet the system demand.

Semiautomatic dry. A dry standpipe system that is arranged through the use of a device, such as a deluge valve, to admit water into the system piping upon activation of a remote control device located at a hose connection. A remote control activation device shall be provided at each hose connection. The water supply for a semiautomatic dry standpipe system shall be capable of supplying the system demand.

START OF CONSTRUCTION. The date of issuance for new construction and *substantial improvements* to *existing structures,* provided the actual start of construction, *repair,* reconstruction, rehabilitation, *addition,* placement or other improvement is within 180 days after the date of issuance. The actual start of construction means the first placement of permanent construction of a building (including a manufactured home) on a site, such as the pouring of a slab or footings, installation of pilings or construction of columns.

Permanent construction does not include land preparation (such as clearing, excavation, grading or filling), the installation of streets or walkways, excavation for a *basement,* footings, piers or foundations, the erection of temporary forms or the installation of accessory buildings such as garages or sheds not occupied as *dwelling units* or not part of the main building. For a *substantial improvement,* the actual "start of construction" means the first *alteration* of any wall, ceiling, floor or other structural part of a building, whether or not that *alteration* affects the external dimensions of the building.

[BS] STEEL CONSTRUCTION, COLD-FORMED. That type of construction made up entirely or in part of *steel structural members* cold formed to shape from sheet or strip steel such as *roof deck,* floor and wall panels, studs, floor joists, roof joists and other structural elements.

[BS] STEEL ELEMENT, STRUCTURAL. Any *steel structural member* of a building or structure consisting of rolled shapes, pipe, hollow structural sections, plates, bars, sheets, rods or steel castings other than cold-formed steel or steel joist members.

[BS] STEEL JOIST. Any *steel structural member* of a building or structure made of hot-rolled or cold-formed solid

or open-web sections, or riveted or welded bars, strip or sheet steel members, or slotted and expanded, or otherwise deformed rolled sections.

[BS] STEEL MEMBER, STRUCTURAL. Any steel structural member of a building or structure consisting of a rolled steel structural shape other than cold-formed steel, or steel joist members.

STEEP SLOPE. A roof slope greater than two units vertical in 12 units horizontal (17-percent slope).

[BS] STONE MASONRY. *Masonry* composed of field, quarried or *cast stone* units bonded by *mortar*.

[F] STORAGE, HAZARDOUS MATERIALS. The keeping, retention or leaving of hazardous materials in closed containers, tanks, cylinders, or similar vessels; or vessels supplying operations through closed connections to the vessel.

[BS] STORAGE RACKS. Cold-formed or hot-rolled steel structural members which are formed into steel storage racks, including pallet storage racks, movable-shelf racks, rack-supported systems, automated storage and retrieval systems (stacker racks), push-back racks, pallet-flow racks, case-flow racks, pick modules and rack-supported platforms. Other types of racks, such as drive-in or drive-through racks, cantilever racks, portable racks or racks made of materials other than steel, are not considered storage racks for the purpose of this code.

[BS] STORM SHELTER. A building, structure or portions thereof, constructed in accordance with ICC 500 and designated for use during a severe wind storm event, such as a hurricane or tornado.

Community storm shelter. A storm shelter not defined as a "Residential storm shelter."

Residential storm shelter. A storm shelter serving occupants of *dwelling units* and having an *occupant load* not exceeding 16 persons.

STORY. That portion of a building included between the upper surface of a floor and the upper surface of the floor or roof next above (see *"Basement," "Building height," "Grade plane" and "Mezzanine"*). A story is measured as the vertical distance from top to top of two successive tiers of beams or finished floor surfaces and, for the topmost story, from the top of the floor finish to the top of the ceiling joists or, where there is not a ceiling, to the top of the roof rafters.

STORY ABOVE GRADE PLANE. Any *story* having its finished floor surface entirely above *grade plane*, or in which the finished surface of the floor next above is:

1. More than 6 feet (1829 mm) above *grade plane*; or
2. More than 12 feet (3658 mm) above the finished ground level at any point.

[BS] STRENGTH (For Chapter 21).

Design strength. Nominal strength multiplied by a strength reduction factor.

Nominal strength. Strength of a member or cross section calculated in accordance with these provisions before application of any strength-reduction factors.

Required strength. Strength of a member or cross section required to resist *factored loads*.

[BS] STRENGTH (for Chapter 16).

Nominal strength. The capacity of a structure or member to resist the effects of *loads*, as determined by computations using *specified* material strengths and dimensions and equations derived from accepted principles of structural mechanics or by field tests or laboratory tests of scaled models, allowing for modeling effects and differences between laboratory and field conditions.

Required strength. Strength of a member, cross section or connection required to resist *factored loads* or related internal moments and forces in such combinations as stipulated by these provisions.

Strength design. A method of proportioning structural members such that the computed forces produced in the members by *factored loads* do not exceed the member design strength [also called "*load and resistance factor design*" (LRFD)]. The term "strength design" is used in the design of concrete and *masonry* structural elements.

[BS] STRUCTURAL COMPOSITE LUMBER. Structural member manufactured using wood elements bonded together with exterior adhesives. Examples of structural composite lumber are:

Laminated strand lumber (LSL). A composite of wood strand elements with wood fibers primarily oriented along the length of the member, where the least dimension of the wood strand elements is 0.10 inch (2.54 mm) or less and their average lengths not less than 150 times the least dimension of the wood strand elements.

Laminated veneer lumber (LVL). A composite of wood *veneer* sheet elements with wood fibers primarily oriented along the length of the member, where the *veneer* element thicknesses are 0.25 inches (6.4 mm) or less.

Oriented strand lumber (OSL). A composite of wood strand elements with wood fibers primarily oriented along the length of the member, where the least dimension of the wood strand elements is 0.10 inches (2.54 mm) or less and their average lengths not less than 75 times and less than 150 times the least dimension of the strand elements.

Parallel strand lumber (PSL). A composite of wood strand elements with wood fibers primarily oriented along the length of the member where the least dimension of the wood strand elements is 0.25 inches (6.4 mm) or less and their average lengths not less than 300 times the least dimension of the wood strand elements.

[BS] STRUCTURAL GLUED-LAMINATED TIMBER. An engineered, stress-rated product of a timber laminating plant, comprised of assemblies of specially selected and prepared wood laminations in which the grain of all laminations is approximately parallel longitudinally and the laminations are bonded with adhesives.

[BS] STRUCTURAL OBSERVATION. The visual observation of the structural system by a *registered design professional* for general conformance to the *approved construction documents*.

[A] STRUCTURE. That which is built or constructed.

SUBSTANTIAL DAMAGE. Damage of any origin sustained by a structure whereby the cost of restoring the structure to its before-damaged condition would equal or exceed 50 percent of the market value of the structure before the damage occurred.

SUBSTANTIAL IMPROVEMENT. Any *repair*, reconstruction, rehabilitation, *alteration*, *addition* or other improvement of a building or structure, the cost of which equals or exceeds 50 percent of the market value of the structure before the improvement or repair is started. If the structure has sustained *substantial damage*, any *repairs* are considered substantial improvement regardless of the actual *repair* work performed. The term does not, however, include either:

1. Any project for improvement of a building required to correct existing health, sanitary or safety code violations identified by the *building official* and that are the minimum necessary to assure safe living conditions.
2. Any *alteration* of a historic structure provided that the *alteration* will not preclude the structure's continued designation as a historic structure.

[BS] SUBSTANTIAL STRUCTURAL DAMAGE. A condition where one or both of the following apply:

1. The vertical elements of the lateral force-resisting system have suffered damage such that the lateral load-carrying capacity of any *story* in any horizontal direction has been reduced by more than 33 percent from its predamage condition.
2. The capacity of any vertical component carrying gravity load, or any group of such components, that supports more than 30 percent of the total area of the structure's floors and roofs has been reduced more than 20 percent from its predamage condition and the remaining capacity of such affected elements, with respect to all dead and *live loads*, is less than 75 percent of that required by this code for new buildings of similar structure, purpose and location.

[E] SUNROOM. A one-*story* structure attached to a building with a glazing area in excess of 40 percent of the gross area of the structure's *exterior walls* and roof.

[F] SUPERVISING STATION. A facility that receives signals and at which personnel are in attendance at all times to respond to these signals.

[F] SUPERVISORY SERVICE. The service required to monitor performance of guard tours and the operative condition of fixed suppression systems or other systems for the protection of life and property.

[F] SUPERVISORY SIGNAL. A signal indicating the need of action in connection with the supervision of guard tours, the fire suppression systems or equipment or the maintenance features of related systems.

[F] SUPERVISORY SIGNAL-INITIATING DEVICE. An initiation device, such as a valve supervisory switch, water-level indicator or low-air pressure switch on a dry-pipe sprinkler system, whose change of state signals an off-normal condition and its restoration to normal of a fire protection or life safety system, or a need for action in connection with guard tours, fire suppression systems or equipment or maintenance features of related systems.

[BS] SUSCEPTIBLE BAY. A roof or portion thereof with:

1. A slope less than $^1/_4$-inch per foot (0.0208 rad); or
2. On which water is impounded, in whole or in part, and the secondary drainage system is functional but the primary drainage system is blocked.

A roof surface with a slope of $^1/_4$-inch per foot (0.0208 rad) or greater towards points of free drainage is not a susceptible bay.

SWIMMING POOL. Any structure intended for swimming, recreational bathing or wading that contains water over 24 inches (610 mm) deep. This includes in-ground, aboveground and on-ground pools; hot tubs; spas and fixed-in-place wading pools.

T RATING. The time period that the *penetration firestop system*, including the penetrating item, limits the maximum temperature rise to 325°F (163°C) above its initial temperature through the penetration on the nonfire side when tested in accordance with ASTM E 814 or UL 1479.

TECHNICAL PRODUCTION AREA. Open elevated areas or spaces intended for entertainment technicians to walk on and occupy for servicing and operating entertainment technology systems and equipment. Galleries, including fly and lighting galleries, gridirons, catwalks, and similar areas are designed for these purposes.

TENSILE MEMBRANE STRUCTURE. A membrane structure having a shape that is determined by tension in the membrane and the geometry of the support structure. Typically, the structure consists of both flexible elements (e.g., membrane and cables), nonflexible elements (e.g., struts, masts, beams and arches) and the anchorage (e.g., supports and foundations). This includes frame-supported tensile membrane structures.

TENT. A structure, enclosure or shelter, with or without sidewalls or drops, constructed of fabric or pliable material supported in any manner except by air or the contents it protects.

[E] THERMAL ISOLATION. A separation of conditioned spaces, between a *sunroom* and a *dwelling unit*, consisting of existing or new walls, doors or windows.

THERMOPLASTIC MATERIAL. A plastic material that is capable of being repeatedly softened by increase of temperature and hardened by decrease of temperature.

THERMOSETTING MATERIAL. A plastic material that is capable of being changed into a substantially nonreformable product when cured.

THROUGH PENETRATION. A breach in both sides of a floor, floor-ceiling or wall assembly to accommodate an item passing through the breaches.

THROUGH-PENETRATION FIRESTOP SYSTEM. An assemblage consisting of a fire-resistance-rated floor, floor-ceiling, or wall assembly, one or more penetrating items pass-

ing through the breaches in both sides of the assembly and the materials or devices, or both, installed to resist the spread of fire through the assembly for a prescribed period of time.

[BS] TIE-DOWN (HOLD-DOWN). A device used to resist uplift of the chords of *shear walls.*

[BS] TIE, WALL. Metal connector that connects *wythes* of *masonry* walls together.

[BS] TILE, STRUCTURAL CLAY. A hollow *masonry unit* composed of burned clay, shale, fire clay or mixture thereof, and having parallel *cells.*

[F] TIRES, BULK STORAGE OF. Storage of tires where the area available for storage exceeds 20,000 cubic feet (566 m^3).

[A] TOWNHOUSE. A single-family *dwelling unit* constructed in a group of three or more attached units in which each unit extends from the foundation to roof and with open space on at least two sides.

[F] TOXIC. A chemical falling within any of the following categories:

1. A chemical that has a median lethal dose (LD_{50}) of more than 50 milligrams per kilogram, but not more than 500 milligrams per kilogram of body weight when administered orally to albino rats weighing between 200 and 300 grams each.
2. A chemical that has a median lethal dose (LD_{50}) of more than 200 milligrams per kilogram, but not more than 1,000 milligrams per kilogram of body weight when administered by continuous contact for 24 hours (or less if death occurs within 24 hours) with the bare skin of albino rabbits weighing between 2 and 3 kilograms each.
3. A chemical that has a median lethal concentration (LC_{50}) in air of more than 200 parts per million, but not more than 2,000 parts per million by volume of gas or vapor, or more than 2 milligrams per liter but not more than 20 milligrams per liter of mist, fume or dust, when administered by continuous inhalation for 1 hour (or less if death occurs within 1 hour) to albino rats weighing between 200 and 300 grams each.

TRANSIENT. Occupancy of a *dwelling unit* or *sleeping unit* for not more than 30 days.

TRANSIENT AIRCRAFT. Aircraft based at another location and that is at the transient location for not more than 90 days.

[BS] TREATED WOOD. Wood products that are conditioned to enhance fire-retardant or preservative properties.

Fire-retardant-treated wood. Wood products that, when impregnated with chemicals by a pressure process or other means during manufacture, exhibit reduced surface-burning characteristics and resist propagation of fire.

Preservative-treated wood. Wood products that, conditioned with chemicals by a pressure process or other means, exhibit reduced susceptibility to damage by fungi, insects or marine borers.

TRIM. Picture molds, chair rails, baseboards, *handrails,* door and window frames and similar decorative or protective materials used in fixed applications.

[F] TROUBLE SIGNAL. A signal initiated by the *fire alarm system* or device indicative of a fault in a monitored circuit or component.

[BS] TUBULAR DAYLIGHTING DEVICE (TDD). A non-operable *fenestration* unit primarily designed to transmit daylight from a roof surface to an interior ceiling via a tubular conduit. The basic unit consists of an exterior glazed weathering surface, a light-transmitting tube with a reflective interior surface, and an interior-sealing device such as a translucent ceiling panel. The unit can be factory assembled, or field-assembled from a manufactured kit.

24-HOUR BASIS. See "24-hour basis" located preceding "AAC masonry."

TYPE A UNIT. A *dwelling unit* or *sleeping unit* designed and constructed for accessibility in accordance with this code and the provisions for *Type A units* in ICC A117.1.

TYPE B UNIT. A *dwelling unit* or *sleeping unit* designed and constructed for accessibility in accordance with this code and the provisions for *Type B units* in ICC A117.1, consistent with the design and construction requirements of the federal Fair Housing Act.

[BS] UNDERLAYMENT. One or more layers of felt, sheathing paper, nonbituminous saturated felt or other *approved* material over which a steep-slope *roof covering* is applied.

UNIT SKYLIGHT. See "Skylight, unit."

[F] UNSTABLE (REACTIVE) MATERIAL. A material, other than an explosive, which in the pure state or as commercially produced, will vigorously polymerize, decompose, condense or become self-reactive and undergo other violent chemical changes, including *explosion,* when exposed to heat, friction or shock, or in the absence of an inhibitor, or in the presence of contaminants, or in contact with *incompatible materials.* Unstable (reactive) materials are subdivided as follows:

Class 4. Materials that in themselves are readily capable of *detonation* or explosive decomposition or explosive reaction at *normal temperatures and pressures.* This class includes materials that are sensitive to mechanical or localized thermal shock at *normal temperatures and pressures.*

Class 3. Materials that in themselves are capable of *detonation* or of explosive decomposition or explosive reaction but which require a strong initiating source or which must be heated under confinement before initiation. This class includes materials that are sensitive to thermal or mechanical shock at elevated temperatures and pressures.

Class 2. Materials that in themselves are normally unstable and readily undergo violent chemical change but do not detonate. This class includes materials that can undergo chemical change with rapid release of energy at *normal temperatures and pressures,* and that can undergo

violent chemical change at elevated temperatures and pressures.

Class 1. Materials that in themselves are normally stable but which can become unstable at elevated temperatures and pressure.

[F] USE (MATERIAL). Placing a material into action, including *solids, liquids* and gases.

VAPOR PERMEABLE MEMBRANE. The property of having a moisture vapor permeance rating of 5 perms (2.9 × 10-10 kg/Pa × s × m^2) or greater, when tested in accordance with the desiccant method using Procedure A of ASTM E 96. A vapor permeable material permits the passage of moisture vapor.

VAPOR RETARDER CLASS. A measure of a material or assembly's ability to limit the amount of moisture that passes through that material or assembly. Vapor retarder class shall be defined using the desiccant method of ASTM E 96 as follows:

Class I: 0.1 perm or less.

Class II: 0.1 < perm ≤ 1.0 perm.

Class III: 1.0 < perm ≤ 10 perm.

VEGETATIVE ROOF. An assembly of interacting components designed to waterproof and normally insulate a building's top surface that includes, by design, vegetation and related landscape elements.

VEHICLE BARRIER. A component or a system of components, near open sides of a garage floor or ramp or building walls that act as restraints for vehicles.

VEHICULAR GATE. A gate that is intended for use at a vehicular entrance or exit to a facility, building or portion thereof, and that is not intended for use by pedestrian traffic.

VENEER. A facing attached to a wall for the purpose of providing ornamentation, protection or insulation, but not counted as adding strength to the wall.

[M] VENTILATION. The natural or mechanical process of supplying conditioned or unconditioned air to, or removing such air from, any space.

VINYL SIDING. A shaped material, made principally from rigid polyvinyl chloride (PVC), that is used as an *exterior wall covering*.

[F] VISIBLE ALARM NOTIFICATION APPLIANCE. A notification appliance that alerts by the sense of sight.

WALKWAY, PEDESTRIAN. A walkway used exclusively as a pedestrian trafficway.

[BS] WALL (for Chapter 21). A vertical element with a horizontal length-to-thickness ratio greater than three, used to enclose space.

Cavity wall. A wall built of *masonry units* or of concrete, or a combination of these materials, arranged to provide an airspace within the wall, and in which the inner and outer parts of the wall are tied together with metal ties.

Dry-stacked, surface-bonded wall. A wall built of concrete *masonry units* where the units are stacked dry, without *mortar* on the bed or *head joints*, and where both sides of the wall are coated with a surface-bonding *mortar*.

Parapet wall. The part of any wall entirely above the roof line.

[BS] WALL, LOAD-BEARING. Any wall meeting either of the following classifications:

1. Any metal or wood stud wall that supports more than 100 pounds per linear foot (1459 N/m) of vertical load in addition to its own weight.
2. Any *masonry* or concrete wall that supports more than 200 pounds per linear foot (2919 N/m) of vertical load in addition to its own weight.

[BS] WALL, NONLOAD-BEARING. Any wall that is not a *load-bearing wall*.

[F] WATER-REACTIVE MATERIAL. A material that explodes; violently reacts; produces *flammable*, *toxic* or other hazardous gases; or evolves enough heat to cause autoignition or ignition of combustibles upon exposure to water or moisture. Water-reactive materials are subdivided as follows:

Class 3. Materials that react explosively with water without requiring heat or confinement.

Class 2. Materials that react violently with water or have the ability to boil water. Materials that produce *flammable*, *toxic* or other hazardous gases or evolve enough heat to cause autoignition or ignition of combustibles upon exposure to water or moisture.

Class 1. Materials that react with water with some release of energy, but not violently.

WATER-RESISTIVE BARRIER. A material behind an *exterior wall covering* that is intended to resist liquid water that has penetrated behind the exterior covering from further intruding into the *exterior wall* assembly.

WEATHER-EXPOSED SURFACES. Surfaces of walls, ceilings, floors, roofs, soffits and similar surfaces exposed to the weather except the following:

1. Ceilings and roof soffits enclosed by walls, fascia, bulkheads or beams that extend not less than 12 inches (305 mm) below such ceiling or roof soffits.
2. Walls or portions of walls beneath an unenclosed roof area, where located a horizontal distance from an open exterior opening equal to not less than twice the height of the opening.
3. Ceiling and roof soffits located a minimum horizontal distance of 10 feet (3048 mm) from the outer edges of the ceiling or roof soffits.

[F] WET-CHEMICAL EXTINGUISHING SYSTEM. A solution of water and potassium-carbonate-based chemical, potassium-acetate-based chemical or a combination thereof, forming an extinguishing agent.

WHEELCHAIR SPACE. A space for a single wheelchair and its occupant.

WILDLAND-URBAN INTERFACE AREA. That geographical area where structures and other human development meets or intermingles with wildland or vegetative fuels.

[BS] WIND-BORNE DEBRIS REGION. Areas within hurricane-prone regions located:

1. Within 1 mile (1.61 km) of the coastal mean high water line where the ultimate design wind speed, V_{ult}, is 130 mph (58 m/s) or greater; or
2. In areas where the ultimate design wind speed is 140 mph (63.6 m/s) or greater; or Hawaii.

For *Risk Category* II buildings and structures and *Risk Category* III buildings and structures, except health care facilities, the wind-borne debris region shall be based on Figure 1609.3.(1). For *Risk Category* IV buildings and structures and *Risk Category* III health care facilities, the wind-borne debris region shall be based on Figure 1609.3(2).

WINDFORCE-RESISTING SYSTEM, MAIN. See "Main windforce-resisting system."

[BS] WIND SPEED, V_{ult}. Ultimate design wind speeds.

[BS] WIND SPEED, V_{asd}. Nominal design wind speeds.

WINDER. A tread with nonparallel edges.

[BS] WIRE BACKING. Horizontal strands of tautened wire attached to surfaces of vertical supports which, when covered with the building paper, provide a *backing* for cement plaster

[F] WIRELESS PROTECTION SYSTEM. A system or a part of a system that can transmit and receive signals without the aid of wire.

[BS] WOOD/PLASTIC COMPOSITE. A composite material made primarily from wood or cellulose-based materials and plastic.

[BS] WOOD SHEAR PANEL. A wood floor, roof or wall component sheathed to act as a *shear wall* or *diaphragm.*

[BS] WOOD STRUCTURAL PANEL. A panel manufactured from *veneers*, wood strands or wafers or a combination of *veneer* and wood strands or wafers bonded together with waterproof synthetic resins or other suitable bonding systems. Examples of wood structural panels are:

Composite panels. A wood structural panel that is comprised of wood *veneer* and reconstituted wood-based material and bonded together with waterproof adhesive;

Oriented strand board (OSB). A mat-formed wood structural panel comprised of thin rectangular wood strands arranged in cross-aligned layers with surface layers normally arranged in the long panel direction and bonded with waterproof adhesive; or

Plywood. A wood structural panel comprised of plies of wood *veneer* arranged in cross-aligned layers. The plies are bonded with waterproof adhesive that cures on application of heat and pressure.

[F] WORKSTATION. A defined space or an independent principal piece of equipment using *HPM* within a *fabrication area* where a specific function, laboratory procedure or research activity occurs. *Approved* or *listed hazardous materials storage cabinets*, *flammable liquid* storage cabinets or *gas cabinets* serving a workstation are included as part of the workstation. A workstation is allowed to contain *ventilation* equipment, fire protection devices, detection devices, electrical devices and other processing and scientific equipment.

[BS] WYTHE. Each continuous, vertical section of a wall, one *masonry unit* in thickness.

YARD. An open space, other than a *court*, unobstructed from the ground to the sky, except where specifically provided by this code, on the lot on which a building is situated.

[F] ZONE. A defined area within the protected premises. A zone can define an area from which a signal can be received, an area to which a signal can be sent or an area in which a form of control can be executed.

[F] ZONE, NOTIFICATION. An area within a building or facility covered by notification appliances which are activated simultaneously.

CHAPTER 3

USE AND OCCUPANCY CLASSIFICATION

User note: Code change proposals to sections preceded by the designation [F] will be considered by the International Fire Code Development Committee during the 2016 (Group B) Code Development Cycle. See explanation on page iv.

SECTION 301
GENERAL

301.1 Scope. The provisions of this chapter shall control the classification of all buildings and structures as to use and occupancy.

SECTION 302
CLASSIFICATION

302.1 General. Structures or portions of structures shall be classified with respect to occupancy in one or more of the groups listed in this section. A room or space that is intended to be occupied at different times for different purposes shall comply with all of the requirements that are applicable to each of the purposes for which the room or space will be occupied. Structures with multiple occupancies or uses shall comply with Section 508. Where a structure is proposed for a purpose that is not specifically provided for in this code, such structure shall be classified in the group that the occupancy most nearly resembles, according to the fire safety and relative hazard involved.

1. Assembly (see Section 303): Groups A-1, A-2, A-3, A-4 and A-5.
2. Business (see Section 304): Group B.
3. Educational (see Section 305): Group E.
4. Factory and Industrial (see Section 306): Groups F-1 and F-2.
5. High Hazard (see Section 307): Groups H-1, H-2, H-3, H-4 and H-5.
6. Institutional (see Section 308): Groups I-1, I-2, I-3 and I-4.
7. Mercantile (see Section 309): Group M.
8. Residential (see Section 310): Groups R-1, R-2, R-3 and R-4.
9. Storage (see Section 311): Groups S-1 and S-2.
10. Utility and Miscellaneous (see Section 312): Group U.

SECTION 303
ASSEMBLY GROUP A

303.1 Assembly Group A. Assembly Group A occupancy includes, among others, the use of a building or structure, or a portion thereof, for the gathering of persons for purposes such as civic, social or religious functions; recreation, food or drink consumption or awaiting transportation.

303.1.1 Small buildings and tenant spaces. A building or tenant space used for assembly purposes with an *occupant load* of less than 50 persons shall be classified as a Group B occupancy.

303.1.2 Small assembly spaces. The following rooms and spaces shall not be classified as Assembly occupancies:

1. A room or space used for assembly purposes with an *occupant load* of less than 50 persons and accessory to another occupancy shall be classified as a Group B occupancy or as part of that occupancy.
2. A room or space used for assembly purposes that is less than 750 square feet (70 m^2) in area and accessory to another occupancy shall be classified as a Group B occupancy or as part of that occupancy.

303.1.3 Associated with Group E occupancies. A room or space used for assembly purposes that is associated with a Group E occupancy is not considered a separate occupancy.

303.1.4 Accessory to places of religious worship. Accessory religious educational rooms and religious auditoriums with *occupant loads* of less than 100 per room or space are not considered separate occupancies.

303.2 Assembly Group A-1. Group A-1 occupancy includes assembly uses, usually with fixed seating, intended for the production and viewing of the performing arts or motion pictures including, but not limited to:

Motion picture theaters
Symphony and concert halls
Television and radio studios admitting an audience
Theaters

303.3 Assembly Group A-2. Group A-2 occupancy includes assembly uses intended for food and/or drink consumption including, but not limited to:

Banquet halls
Casinos (gaming areas)
Nightclubs
Restaurants, cafeterias and similar dining facilities (including associated commercial kitchens)
Taverns and bars

303.4 Assembly Group A-3. Group A-3 occupancy includes assembly uses intended for worship, recreation or amusement and other assembly uses not classified elsewhere in Group A including, but not limited to:

Amusement arcades
Art galleries
Bowling alleys
Community halls

Courtrooms
Dance halls (not including food or drink consumption)
Exhibition halls
Funeral parlors
Gymnasiums (without spectator seating)
Indoor *swimming pools* (without spectator seating)
Indoor tennis courts (without spectator seating)
Lecture halls
Libraries
Museums
Places of religious worship
Pool and billiard parlors
Waiting areas in transportation terminals

303.5 Assembly Group A-4. Group A-4 occupancy includes assembly uses intended for viewing of indoor sporting events and activities with spectator seating including, but not limited to:

Arenas
Skating rinks
Swimming pools
Tennis courts

303.6 Assembly Group A-5. Group A-5 occupancy includes assembly uses intended for participation in or viewing outdoor activities including, but not limited to:

Amusement park structures
Bleachers
Grandstands
Stadiums

SECTION 304
BUSINESS GROUP B

304.1 Business Group B. Business Group B occupancy includes, among others, the use of a building or structure, or a portion thereof, for office, professional or service-type transactions, including storage of records and accounts. Business occupancies shall include, but not be limited to, the following:

Airport traffic control towers
Ambulatory care facilities
Animal hospitals, kennels and pounds
Banks
Barber and beauty shops
Car wash
Civic administration
Clinic, outpatient
Dry cleaning and laundries: pick-up and delivery stations and self-service
Educational occupancies for students above the 12th grade
Electronic data processing
Food processing establishments and commercial kitchens not associated with restaurants, cafeterias and similar dining facilities not more than 2,500 square feet (232 m^2) in area.
Laboratories: testing and research
Motor vehicle showrooms
Post offices
Print shops
Professional services (architects, attorneys, dentists, physicians, engineers, etc.)
Radio and television stations
Telephone exchanges
Training and skill development not in a school or academic program (this shall include, but not be limited to, tutoring centers, martial arts studios, gymnastics and similar uses regardless of the ages served, and where not classified as a Group A occupancy).

304.2 Definitions. The following terms are defined in Chapter 2:

AMBULATORY CARE FACILITY.

CLINIC, OUTPATIENT.

SECTION 305
EDUCATIONAL GROUP E

305.1 Educational Group E. Educational Group E occupancy includes, among others, the use of a building or structure, or a portion thereof, by six or more persons at any one time for educational purposes through the 12th grade.

305.1.1 Accessory to places of religious worship. Religious educational rooms and religious auditoriums, which are accessory to *places of religious worship* in accordance with Section 303.1.4 and have *occupant loads* of less than 100 per room or space, shall be classified as Group A-3 occupancies.

305.2 Group E, day care facilities. This group includes buildings and structures or portions thereof occupied by more than five children older than $2^1/_2$ years of age who receive educational, supervision or *personal care services* for fewer than 24 hours per day.

305.2.1 Within places of religious worship. Rooms and spaces within *places of religious worship* providing such day care during religious functions shall be classified as part of the primary occupancy.

305.2.2 Five or fewer children. A facility having five or fewer children receiving such day care shall be classified as part of the primary occupancy.

305.2.3 Five or fewer children in a dwelling unit. A facility such as the above within a *dwelling unit* and having five or fewer children receiving such day care shall be classified as a Group R-3 occupancy or shall comply with the *International Residential Code*.

SECTION 306
FACTORY GROUP F

306.1 Factory Industrial Group F. Factory Industrial Group F occupancy includes, among others, the use of a building or structure, or a portion thereof, for assembling, disassembling, fabricating, finishing, manufacturing, packaging, repair or processing operations that are not classified as a Group H hazardous or Group S storage occupancy.

306.2 Moderate-hazard factory industrial, Group F-1. Factory industrial uses that are not classified as Factory Industrial F-2 Low Hazard shall be classified as F-1 Moder-

ate Hazard and shall include, but not be limited to, the following:

Aircraft (manufacturing, not to include repair)
Appliances
Athletic equipment
Automobiles and other motor vehicles
Bakeries
Beverages: over 16-percent alcohol content
Bicycles
Boats
Brooms or brushes
Business machines
Cameras and photo equipment
Canvas or similar fabric
Carpets and rugs (includes cleaning)
Clothing
Construction and agricultural machinery
Disinfectants
Dry cleaning and dyeing
Electric generation plants
Electronics
Engines (including rebuilding)
Food processing establishments and commercial kitchens not associated with restaurants, cafeterias and similar dining facilities more than 2,500 square feet (232 m^2) in area.
Furniture
Hemp products
Jute products
Laundries
Leather products
Machinery
Metals
Millwork (sash and door)
Motion pictures and television filming (without spectators)
Musical instruments
Optical goods
Paper mills or products
Photographic film
Plastic products
Printing or publishing
Recreational vehicles
Refuse incineration
Shoes
Soaps and detergents
Textiles
Tobacco
Trailers
Upholstering
Wood; distillation
Woodworking (cabinet)

306.3 Low-hazard factory industrial, Group F-2. Factory industrial uses that involve the fabrication or manufacturing of noncombustible materials that during finishing, packing or processing do not involve a significant fire hazard shall be classified as F-2 occupancies and shall include, but not be limited to, the following:

Beverages: up to and including 16-percent alcohol content
Brick and masonry
Ceramic products
Foundries
Glass products
Gypsum
Ice
Metal products (fabrication and assembly)

SECTION 307
HIGH-HAZARD GROUP H

[F] 307.1 High-hazard Group H. High-hazard Group H occupancy includes, among others, the use of a building or structure, or a portion thereof, that involves the manufacturing, processing, generation or storage of materials that constitute a physical or health hazard in quantities in excess of those allowed in *control areas* complying with Section 414, based on the maximum allowable quantity limits for *control areas* set forth in Tables 307.1(1) and 307.1(2). Hazardous occupancies are classified in Groups H-1, H-2, H-3, H-4 and H-5 and shall be in accordance with this section, the requirements of Section 415 and the *International Fire Code*. Hazardous materials stored, or used on top of roofs or canopies, shall be classified as outdoor storage or use and shall comply with the *International Fire Code*.

[F] 307.1.1 Uses other than Group H. An occupancy that stores, uses or handles hazardous materials as described in one or more of the following items shall not be classified as Group H, but shall be classified as the occupancy that it most nearly resembles.

1. Buildings and structures occupied for the application of flammable finishes, provided that such buildings or areas conform to the requirements of Section 416 and the *International Fire Code*.
2. Wholesale and retail sales and storage of flammable and combustible liquids in mercantile occupancies conforming to the *International Fire Code*.
3. Closed piping system containing flammable or combustible liquids or gases utilized for the operation of machinery or equipment.
4. Cleaning establishments that utilize combustible liquid solvents having a flash point of 140°F (60°C) or higher in closed systems employing equipment *listed* by an *approved* testing agency, provided that this occupancy is separated from all other areas of the building by 1-hour *fire barriers* constructed in accordance with Section 707 or 1-hour *horizontal assemblies* constructed in accordance with Section 711, or both.
5. Cleaning establishments that utilize a liquid solvent having a flash point at or above 200°F (93°C).
6. Liquor stores and distributors without bulk storage.
7. Refrigeration systems.

8. The storage or utilization of materials for agricultural purposes on the premises.
9. Stationary batteries utilized for facility emergency power, uninterruptable power supply or telecommunication facilities, provided that the batteries are provided with safety venting caps and *ventilation* is provided in accordance with the *International Mechanical Code.*
10. Corrosive personal or household products in their original packaging used in retail display.
11. Commonly used corrosive building materials.
12. Buildings and structures occupied for aerosol storage shall be classified as Group S-1, provided that such buildings conform to the requirements of the *International Fire Code.*
13. Display and storage of nonflammable solid and nonflammable or noncombustible liquid hazardous materials in quantities not exceeding the maximum allowable quantity per *control area* in Group M or S occupancies complying with Section 414.2.5.
14. The storage of black powder, smokeless propellant and small arms primers in Groups M and R-3 and special industrial explosive devices in Groups B, F, M and S, provided such storage conforms to the quantity limits and requirements prescribed in the *International Fire Code.*

[F] 307.1.2 Hazardous materials. Hazardous materials in any quantity shall conform to the requirements of this code, including Section 414, and the *International Fire Code.*

[F] 307.2 Definitions. The following terms are defined in Chapter 2:

AEROSOL

Level 1 aerosol products.

Level 2 aerosol products.

Level 3 aerosol products.

AEROSOL CONTAINER.

BALED COTTON.

BALED COTTON, DENSELY PACKED.

BARRICADE.

Artificial barricade.

Natural barricade.

BOILING POINT.

CLOSED SYSTEM.

COMBUSTIBLE DUST.

COMBUSTIBLE FIBERS.

COMBUSTIBLE LIQUID.

Class II.

Class IIIA.

Class IIIB.

COMPRESSED GAS.

CONTROL AREA.

CORROSIVE.

CRYOGENIC FLUID.

DAY BOX.

DEFLAGRATION.

DETONATION.

DISPENSING.

EXPLOSION.

EXPLOSIVE.

High explosive.

Low explosive.

Mass-detonating explosives.

UN/DOTn Class 1 explosives.

Division 1.1.

Division 1.2.

Division 1.3.

Division 1.4.

Division 1.5.

Division 1.6.

FIREWORKS.

Fireworks, 1.3G.

Fireworks, 1.4G.

FLAMMABLE GAS.

FLAMMABLE LIQUEFIED GAS.

FLAMMABLE LIQUID.

Class IA.

Class IB.

Class IC.

FLAMMABLE MATERIAL.

FLAMMABLE SOLID.

FLASH POINT.

HANDLING.

HAZARDOUS MATERIALS.

HEALTH HAZARD.

HIGHLY TOXIC.

INCOMPATIBLE MATERIALS.

INERT GAS.

OPEN SYSTEM.

OPERATING BUILDING.

ORGANIC PEROXIDE.

Class I.

Class II.

Class III.

Class IV.

Class V.

Unclassified detonable.

OXIDIZER.

Class 4.

Class 3.

Class 2.

Class 1.

OXIDIZING GAS.

PHYSICAL HAZARD.

PYROPHORIC.

PYROTECHNIC COMPOSITION.

TOXIC.

UNSTABLE (REACTIVE) MATERIAL.

Class 4.

Class 3.

Class 2.

Class 1.

WATER-REACTIVE MATERIAL.

Class 3.

Class 2.

Class 1.

[F] 307.3 High-hazard Group H-1. Buildings and structures containing materials that pose a detonation hazard shall be classified as Group H-1. Such materials shall include, but not be limited to, the following:

Detonable pyrophoric materials

Explosives:

Division 1.1

Division 1.2

Division 1.3

Division 1.4

Division 1.5

Division 1.6

Organic peroxides, unclassified detonable

Oxidizers, Class 4

Unstable (reactive) materials, Class 3 detonable and Class 4

TABLE 307.1(1)
MAXIMUM ALLOWABLE QUANTITY PER CONTROL AREA OF HAZARDOUS MATERIALS POSING A PHYSICAL HAZARD[a, l, m, n, p]

MATERIAL	CLASS	GROUP WHEN THE MAXIMUM ALLOWABLE QUANTITY IS EXCEEDED	STORAGE[b]			USE-CLOSED SYSTEMS[b]			USE-OPEN SYSTEMS[b]	
			Solid pounds (cubic feet)	Liquid gallons (pounds)	Gas cubic feet at NTP	Solid pounds (cubic feet)	Liquid gallons (pounds)	Gas cubic feet at NTP	Solid pounds (cubic feet)	Liquid gallons (pounds)
Combustible dust	NA	H-2	See Note q	NA	NA	See Note q	NA	NA	See Note q	NA
Combustible fiber[q]	Loose Baled[o]	H-3	(100) (1,000)	NA	NA	(100) (1,000)	NA	NA	(20) (200)	NA
Combustible liquid[c, i]	II IIIA IIIB	H-2 or H-3 H-2 or H-3 NA	NA	120[d, e] 330[d, e] 13,200[e, f]	NA	NA	120[d] 330[d] 13,200[f]	NA	NA	30[d] 80[d] 3,300[f]
Consumer fireworks	1.4G	H-3	125[e, l]	NA	NA	NA	NA	NA	NA	NA
Cryogenic flammable	NA	H-2	NA	45[d]	NA	NA	45[d]	NA	NA	10[d]
Cryogenic inert	NA	NA	NA	NA	NL	NA	NA	NL	NA	NA
Cryogenic oxidizing	NA	H-3	NA	45[d]	NA	NA	45[d]	NA	NA	10[d]
Explosives	Division 1.1 Division 1.2 Division 1.3 Division 1.4 Division 1.4G Division 1.5 Division 1.6	H-1 H-1 H-1 or H-2 H-3 H-3 H-1 H-1	1[e, g] 1[e, g] 5[e, g] 50[e, g] 125[d, e, l] 1[e, g] 1[e, g]	(1)[e, g] (1)[e, g] (5)[e, g] (50)[e, g] NA (1)[e, g] NA	NA	0.25[g] 0.25[g] 1[g] 50[g] NA 0.25[g] NA	(0.25)[g] (0.25)[g] (1)[g] (50)[g] NA (0.25)[g] NA	NA	0.25[g] 0.25[g] 1[g] NA NA 0.25[g] NA	(0.25)[g] (0.25)[g] (1)[g] NA NA (0.25)[g] NA
Flammable gas	Gaseous Liquefied	H-2	NA	NA (150)[d, e]	1,000[d, e] NA	NA	NA (150)[d, e]	1,000[d, e] NA	NA	NA
Flammable liquid[c]	IA IB and IC	H-2 or H-3	NA	30[d, e] 120[d, e]	NA	NA	30[d] 120[d]	NA	NA	10[d] 30[d]
Flammable liquid, combination (IA, IB, IC)	NA	H-2 or H-3	NA	120[d, e, h]	NA	NA	120[d, h]	NA	NA	30[d, h]

(continued)

TABLE 307.1(1)—continued
MAXIMUM ALLOWABLE QUANTITY PER CONTROL AREA OF HAZARDOUS MATERIALS POSING A PHYSICAL HAZARD[a, l, m, n, p]

MATERIAL	CLASS	GROUP WHEN THE MAXIMUM ALLOWABLE QUANTITY IS EXCEEDED	STORAGE[b]			USE-CLOSED SYSTEMS[b]			USE-OPEN SYSTEMS[b]	
			Solid pounds (cubic feet)	Liquid gallons (pounds)	Gas cubic feet at NTP	Solid pounds (cubic feet)	Liquid gallons (pounds)	Gas cubic feet at NTP	Solid pounds (cubic feet)	Liquid gallons (pounds)
Flammable solid	NA	H-3	125[d, e]	NA	NA	125[d]	NA	NA	25[d]	NA
Inert gas	Gaseous Liquefied	NA NA	NA NA	NA NA	NL NL	NA NA	NA NA	NL NL	NA NA	NA NA
Organic peroxide	UD I II III IV V	H-1 H-2 H-3 H-3 NA NA	1[e, g] 5[d, e] 50[d, e] 125[d, e] NL NL	(1)[e, g] (5)[d, e] (50)[d, e] (125)[d, e] NL NL	NA	0.25[g] 1[d] 50[d] 125[d] NL NL	(0.25)[g] (1)[d] (50)[d] (125)[d] NL NL	NA	0.25[g] 1[d] 10[d] 25[d] NL NL	(0.25)[g] (1)[d] (10)[d] (25)[d] NL NL
Oxidizer	4 3[k] 2 1	H-1 H-2 or H-3 H-3 NA	1[g] 10[d, e] 250[d, e] 4,000[e, f]	(1)[e, g] (10)[d, e] (250)[d, e] (4,000)[e, f]	NA	0.25[g] 2[d] 250[d] 4,000[f]	(0.25)[g] (2)[d] (250)[d] (4,000)[f]	NA	0.25[g] 2[d] 50[d] 1,000[f]	(0.25)[g] (2)[d] (50)[d] (1,000)[f]
Oxidizing gas	Gaseous Liquefied	H-3	NA	NA (150)[d, e]	1,500[d, e] NA	NA	NA (150)[d, e]	1,500[d, e] NA	NA	NA
Pyrophoric	NA	H-2	4[e, g]	(4)[e, g]	50[e, g]	1[g]	(1)[g]	10[e, g]	0	0
Unstable (reactive)	4 3 2 1	H-1 H-1 or H-2 H-3 NA	1[e, g] 5[d, e] 50[d, e] NL	(1)[e, g] (5)[d, e] (50)[d, e] NL	10[e, g] 50[d, e] 750[d, e] NL	0.25[g] 1[d] 50[d] NL	(0.25)[g] (1)[d] (50)[d] NL	2[e, g] 10[d, e] 750[d, e] NL	0.25[g] 1[d] 10[d] NL	(0.25)[g] (1)[d] (10)[d] NL
Water reactive	3 2 1	H-2 H-3 NA	5[d, e] 50[d, e] NL	(5)[d, e] (50)[d, e] NL	NA	5[d] 50[d] NL	(5)[d] (50)[d] NL	NA	1[d] 10[d] NL	(1)[d] (10)[d] NL

For SI: 1 cubic foot = 0.028 m^3, 1 pound = 0.454 kg, 1 gallon = 3.785 L.

NL = Not Limited; NA = Not Applicable; UD = Unclassified Detonable.

a. For use of control areas, see Section 414.2.

b. The aggregate quantity in use and storage shall not exceed the quantity listed for storage.

c. The quantities of alcoholic beverages in retail and wholesale sales occupancies shall not be limited provided the liquids are packaged in individual containers not exceeding 1.3 gallons. In retail and wholesale sales occupancies, the quantities of medicines, foodstuffs or consumer products, and cosmetics containing not more than 50 percent by volume of water-miscible liquids with the remainder of the solutions not being flammable, shall not be limited, provided that such materials are packaged in individual containers not exceeding 1.3 gallons.

d. Maximum allowable quantities shall be increased 100 percent in buildings equipped throughout with an *automatic sprinkler system* in accordance with Section 903.3.1.1. Where Note e also applies, the increase for both notes shall be applied accumulatively.

e. Maximum allowable quantities shall be increased 100 percent when stored in approved storage cabinets, day boxes, gas cabinets, gas rooms or exhausted enclosures or in *listed* safety cans in accordance with Section 5003.9.10 of the *International Fire Code*. Where Note d also applies, the increase for both notes shall be applied accumulatively.

f. Quantities shall not be limited in a building equipped throughout with an *automatic sprinkler system* in accordance with Section 903.3.1.1.

g. Allowed only in buildings equipped throughout with an *automatic sprinkler system* in accordance with Section 903.3.1.1.

h. Containing not more than the maximum allowable quantity per *control area* of Class IA, IB or IC flammable liquids.

i. The maximum allowable quantity shall not apply to fuel oil storage complying with Section 603.3.2 of the *International Fire Code*.

j. Quantities in parenthesis indicate quantity units in parenthesis at the head of each column.

k. A maximum quantity of 200 pounds of solid or 20 gallons of liquid Class 3 oxidizers is allowed when such materials are necessary for maintenance purposes, operation or sanitation of equipment when the storage containers and the manner of storage are approved.

l. Net weight of the pyrotechnic composition of the fireworks. Where the net weight of the pyrotechnic composition of the fireworks is not known, 25 percent of the gross weight of the fireworks, including packaging, shall be used.

m. For gallons of liquids, divide the amount in pounds by 10 in accordance with Section 5003.1.2 of the *International Fire Code*.

n. For storage and display quantities in Group M and storage quantities in Group S occupancies complying with Section 414.2.5, see Tables 414.2.5(1) and 414.2.5(2).

o. Densely packed baled cotton that complies with the packing requirements of ISO 8115 shall not be included in this material class.

p. The following shall not be included in determining the maximum allowable quantities:

1. Liquid or gaseous fuel in fuel tanks on vehicles.
2. Liquid or gaseous fuel in fuel tanks on motorized equipment operated in accordance with the *International Fire Code*.
3. Gaseous fuels in piping systems and fixed appliances regulated by the *International Fuel Gas Code*.
4. Liquid fuels in piping systems and fixed appliances regulated by the *International Mechanical Code*.
5. Alcohol-based hand rubs classified as Class I or II liquids in dispensers that are installed in accordance with Sections 5705.5 and 5705.5.1 of the *International Fire Code*. The location of the alcohol-based hand rub (ABHR) dispensers shall be provided in the construction documents.

q. Where manufactured, generated or used in such a manner that the concentration and conditions create a fire or explosion hazard based on information prepared in accordance with Section 414.1.3.

[F] TABLE 307.1(2)
MAXIMUM ALLOWABLE QUANTITY PER CONTROL AREA OF HAZARDOUS MATERIAL POSING A HEALTH HAZARD[a, c, f, h, i]

MATERIAL	STORAGE[b]			USE-CLOSED SYSTEMS[b]			USE-OPEN SYSTEMS[b]	
	Solid pounds[d, f]	Liquid gallons (pounds)[d, f]	Gas cubic feet at NTP (pounds)[d]	Solid pounds[d]	Liquid gallons (pounds)[e, d]	Gas cubic feet at NTP (pounds)[d]	Solid pounds[d]	Liquid gallons (pounds)[d]
Corrosives	5,000	500	Gaseous 810[e, f] Liquefied (150)	5,000	500	Gaseous 810[e] Liquefied (150)	1,000	100
Highly Toxic	10	(10)	Gaseous 20[g] Liquefied (4)[g]	10	(10)	Gaseous 20[g] Liquefied (4)[g]	3	(3)
Toxic	500	(500)	Gaseous 810[e] Liquefied (150)[e]	500	(500)	Gaseous 810[e] Liquefied (150)[e]	125	(125)

For SI: 1 cubic foot = 0.028 m^3, 1 pound = 0.454 kg, 1 gallon = 3.785 L.

a. For use of control areas, see Section 414.2.

b. The aggregate quantity in use and storage shall not exceed the quantity listed for storage.

c. In retail and wholesale sales occupancies, the quantities of medicines, foodstuffs or consumer products, and cosmetics containing not more than 50 percent by volume of water-miscible liquids and with the remainder of the solutions not being flammable, shall not be limited, provided that such materials are packaged in individual containers not exceeding 1.3 gallons.

d. Maximum allowable quantities shall be increased 100 percent in buildings equipped throughout with an *approved automatic sprinkler system* in accordance with Section 903.3.1.1. Where Note e also applies, the increase for both notes shall be applied accumulatively.

e. Maximum allowable quantities shall be increased 100 percent where stored in approved storage cabinets, gas cabinets or exhausted enclosures as specified in the *International Fire Code*. Where Note d also applies, the increase for both notes shall be applied accumulatively.

f. For storage and display quantities in Group M and storage quantities in Group S occupancies complying with Section 414.2.5, see Tables 414.2.5(1) and 414.2.5(2).

g. Allowed only where stored in approved exhausted gas cabinets or exhausted enclosures as specified in the *International Fire Code*.

h. Quantities in parenthesis indicate quantity units in parenthesis at the head of each column.

i. For gallons of liquids, divide the amount in pounds by 10 in accordance with Section 5003.1.2 of the *International Fire Code*.

[F] 307.3.1 Occupancies containing explosives not classified as H-1. The following occupancies containing explosive materials shall be classified as follows:

1. Division 1.3 explosive materials that are used and maintained in a form where either confinement or configuration will not elevate the hazard from a mass fire to mass explosion hazard shall be allowed in H-2 occupancies.
2. Articles, including articles packaged for shipment, that are not regulated as a Division 1.4 explosive under Bureau of Alcohol, Tobacco, Firearms and Explosives regulations, or unpackaged articles used in process operations that do not propagate a detonation or deflagration between articles shall be allowed in H-3 occupancies.

[F] 307.4 High-hazard Group H-2. Buildings and structures containing materials that pose a deflagration hazard or a hazard from accelerated burning shall be classified as Group H-2. Such materials shall include, but not be limited to, the following:

Class I, II or IIIA flammable or combustible liquids that are used or stored in normally open containers or systems, or in closed containers or systems pressurized at more than 15 pounds per square inch gauge (103.4 kPa).

Combustible dusts where manufactured, generated or used in such a manner that the concentration and conditions create a fire or explosion hazard based on information prepared in accordance with Section 414.1.3.

Cryogenic fluids, flammable.

Flammable gases.

Organic peroxides, Class I.

Oxidizers, Class 3, that are used or stored in normally open containers or systems, or in closed containers or systems pressurized at more than 15 pounds per square inch gauge (103 kPa).

Pyrophoric liquids, solids and gases, nondetonable.

Unstable (reactive) materials, Class 3, nondetonable.

Water-reactive materials, Class 3.

[F] 307.5 High-hazard Group H-3. Buildings and structures containing materials that readily support combustion or that pose a physical hazard shall be classified as Group H-3. Such materials shall include, but not be limited to, the following:

Class I, II or IIIA flammable or combustible liquids that are used or stored in normally closed containers or systems pressurized at 15 pounds per square inch gauge (103.4 kPa) or less.

Combustible fibers, other than densely packed baled cotton, where manufactured, generated or used in such a manner that the concentration and conditions create a fire or explosion hazard based on information prepared in accordance with Section 414.1.3.

Consumer fireworks, 1.4G (Class C, Common)

Cryogenic fluids, oxidizing

Flammable solids

Organic peroxides, Class II and III

Oxidizers, Class 2

Oxidizers, Class 3, that are used or stored in normally closed containers or systems pressurized at 15 pounds per square inch gauge (103 kPa) or less

Oxidizing gases

Unstable (reactive) materials, Class 2

Water-reactive materials, Class 2

[F] 307.6 High-hazard Group H-4. Buildings and structures containing materials that are health hazards shall be classified as Group H-4. Such materials shall include, but not be limited to, the following:

Corrosives
Highly toxic materials
Toxic materials

[F] 307.7 High-hazard Group H-5. Semiconductor fabrication facilities and comparable research and development areas in which hazardous production materials (HPM) are used and the aggregate quantity of materials is in excess of those listed in Tables 307.1(1) and 307.1(2) shall be classified as Group H-5. Such facilities and areas shall be designed and constructed in accordance with Section 415.10.

[F] 307.8 Multiple hazards. Buildings and structures containing a material or materials representing hazards that are classified in one or more of Groups H-1, H-2, H-3 and H-4 shall conform to the code requirements for each of the occupancies so classified.

SECTION 308
INSTITUTIONAL GROUP I

308.1 Institutional Group I. Institutional Group I occupancy includes, among others, the use of a building or structure, or a portion thereof, in which care or supervision is provided to persons who are or are not capable of self-preservation without physical assistance or in which persons are detained for penal or correctional purposes or in which the liberty of the occupants is restricted. Institutional occupancies shall be classified as Group I-1, I-2, I-3 or I-4.

308.2 Definitions. The following terms are defined in Chapter 2:

24-HOUR BASIS.

CUSTODIAL CARE.

DETOXIFICATION FACILITIES.

FOSTER CARE FACILITIES.

HOSPITALS AND PSYCHIATRIC HOSPITALS.

INCAPABLE OF SELF-PRESERVATION.

MEDICAL CARE.

NURSING HOMES.

308.3 Institutional Group I-1. Institutional Group I-1 occupancy shall include buildings, structures or portions thereof for more than 16 persons, excluding staff, who reside on a 24-hour basis in a supervised environment and receive custodial care. Buildings of Group I-1 shall be classified as one of the occupancy conditions specified in Section 308.3.1 or 308.3.2. This group shall include, but not be limited to, the following:

Alcohol and drug centers
Assisted living facilities
Congregate care facilities
Group homes
Halfway houses
Residential board and care facilities
Social rehabilitation facilities

308.3.1 Condition 1. This occupancy condition shall include buildings in which all persons receiving custodial care who, without any assistance, are capable of responding to an emergency situation to complete building evacuation.

308.3.2 Condition 2. This occupancy condition shall include buildings in which there are any persons receiving custodial care who require limited verbal or physical assistance while responding to an emergency situation to complete building evacuation.

308.3.3 Six to 16 persons receiving custodial care. A facility housing not fewer than six and not more than 16 persons receiving custodial care shall be classified as Group R-4.

308.3.4 Five or fewer persons receiving custodial care. A facility with five or fewer persons receiving custodial care shall be classified as Group R-3 or shall comply with the *International Residential Code* provided an *automatic sprinkler system* is installed in accordance with Section 903.3.1.3 or Section P2904 of the *International Residential Code*.

308.4 Institutional Group I-2. Institutional Group I-2 occupancy shall include buildings and structures used for *medical care* on a 24-hour basis for more than five persons who are *incapable of self-preservation*. This group shall include, but not be limited to, the following:

Foster care facilities
Detoxification facilities
Hospitals
Nursing homes
Psychiatric hospitals

308.4.1 Occupancy conditions. Buildings of Group I-2 shall be classified as one of the occupancy conditions specified in Section 308.4.1.1 or 308.4.1.2.

308.4.1.1 Condition 1. This occupancy condition shall include facilities that provide nursing and medical care but do not provide emergency care, surgery, obstetrics or in-patient stabilization units for psychiatric or detoxification, including but not limited to nursing homes and foster care facilities.

308.4.1.2 Condition 2. This occupancy condition shall include facilities that provide nursing and medical care and could provide emergency care, surgery, obstetrics or in-patient stabilization units for psychiatric or detoxification, including but not limited to hospitals.

308.4.2 Five or fewer persons receiving medical care. A facility with five or fewer persons receiving medical care shall be classified as Group R-3 or shall comply with the *International Residential Code* provided an *automatic sprinkler system* is installed in accordance with Section 903.3.1.3 or Section P2904 of the *International Residential Code*.

308.5 Institutional Group I-3. Institutional Group I-3 occupancy shall include buildings and structures that are inhabited by more than five persons who are under restraint or security. A Group I-3 facility is occupied by persons who are generally *incapable of self-preservation* due to security measures not

under the occupants' control. This group shall include, but not be limited to, the following:

Correctional centers
Detention centers
Jails
Prerelease centers
Prisons
Reformatories

Buildings of Group I-3 shall be classified as one of the occupancy conditions specified in Sections 308.5.1 through 308.5.5 (see Section 408.1).

308.5.1 Condition 1. This occupancy condition shall include buildings in which free movement is allowed from sleeping areas, and other spaces where access or occupancy is permitted, to the exterior via *means of egress* without restraint. A Condition 1 facility is permitted to be constructed as Group R.

308.5.2 Condition 2. This occupancy condition shall include buildings in which free movement is allowed from sleeping areas and any other occupied *smoke compartment* to one or more other *smoke compartments.* Egress to the exterior is impeded by locked *exits.*

308.5.3 Condition 3. This occupancy condition shall include buildings in which free movement is allowed within individual *smoke compartments*, such as within a residential unit comprised of individual *sleeping units* and group activity spaces, where egress is impeded by remote-controlled release of *means of egress* from such a *smoke compartment* to another *smoke compartment.*

308.5.4 Condition 4. This occupancy condition shall include buildings in which free movement is restricted from an occupied space. Remote-controlled release is provided to permit movement from *sleeping units*, activity spaces and other occupied areas within the *smoke compartment* to other *smoke compartments.*

308.5.5 Condition 5. This occupancy condition shall include buildings in which free movement is restricted from an occupied space. Staff-controlled manual release is provided to permit movement from *sleeping units*, activity spaces and other occupied areas within the *smoke compartment* to other *smoke compartments.*

308.6 Institutional Group I-4, day care facilities. Institutional Group I-4 occupancy shall include buildings and structures occupied by more than five persons of any age who receive *custodial care* for fewer than 24 hours per day by persons other than parents or guardians, relatives by blood, marriage or adoption, and in a place other than the home of the person cared for. This group shall include, but not be limited to, the following:

Adult day care
Child day care

308.6.1 Classification as Group E. A child day care facility that provides care for more than five but not more than 100 children $2^1/_2$ years or less of age, where the rooms in which the children are cared for are located on a *level of exit discharge* serving such rooms and each of these child care rooms has an *exit* door directly to the exterior, shall be classified as Group E.

308.6.2 Within a place of religious worship. Rooms and spaces within *places of religious worship* providing such care during religious functions shall be classified as part of the primary occupancy.

308.6.3 Five or fewer persons receiving care. A facility having five or fewer persons receiving *custodial care* shall be classified as part of the primary occupancy.

308.6.4 Five or fewer persons receiving care in a dwelling unit. A facility such as the above within a *dwelling unit* and having five or fewer persons receiving *custodial care* shall be classified as a Group R-3 occupancy or shall comply with the *International Residential Code.*

SECTION 309
MERCANTILE GROUP M

309.1 Mercantile Group M. Mercantile Group M occupancy includes, among others, the use of a building or structure or a portion thereof for the display and sale of merchandise, and involves stocks of goods, wares or merchandise incidental to such purposes and accessible to the public. Mercantile occupancies shall include, but not be limited to, the following:

Department stores
Drug stores
Markets
Motor fuel-dispensing facilities
Retail or wholesale stores
Sales rooms

309.2 Quantity of hazardous materials. The aggregate quantity of nonflammable solid and nonflammable or noncombustible liquid hazardous materials stored or displayed in a single *control area* of a Group M occupancy shall not exceed the quantities in Table 414.2.5(1).

SECTION 310
RESIDENTIAL GROUP R

310.1 Residential Group R. Residential Group R includes, among others, the use of a building or structure, or a portion thereof, for sleeping purposes when not classified as an Institutional Group I or when not regulated by the *International Residential Code.*

310.2 Definitions. The following terms are defined in Chapter 2:

BOARDING HOUSE.

CONGREGATE LIVING FACILITIES.

DORMITORY.

GROUP HOME.

GUEST ROOM.

LODGING HOUSE.

PERSONAL CARE SERVICE.

TRANSIENT.

310.3 Residential Group R-1. Residential Group R-1 occupancies containing *sleeping units* where the occupants are primarily *transient* in nature, including:

Boarding houses (*transient*) with more than 10 occupants
Congregate living facilities (*transient*) with more than 10 occupants
Hotels (*transient*)
Motels (*transient*)

310.4 Residential Group R-2. Residential Group R-2 occupancies containing *sleeping units* or more than two *dwelling units* where the occupants are primarily permanent in nature, including:

Apartment houses
Boarding houses (nontransient) with more than 16 occupants
Congregate living facilities (nontransient) with more than 16 occupants
Convents
Dormitories
Fraternities and sororities
Hotels (nontransient)
Live/work units
Monasteries
Motels (nontransient)
Vacation timeshare properties

310.5 Residential Group R-3. Residential Group R-3 occupancies where the occupants are primarily permanent in nature and not classified as Group R-1, R-2, R-4 or I, including:

Buildings that do not contain more than two *dwelling units*
Boarding houses (nontransient) with 16 or fewer occupants
Boarding houses (*transient*) with 10 or fewer occupants
Care facilities that provide accommodations for five or fewer persons receiving care
Congregate living facilities (nontransient) with 16 or fewer occupants
Congregate living facilities (*transient*) with 10 or fewer occupants
Lodging houses with five or fewer *guest rooms*

310.5.1 Care facilities within a dwelling. Care facilities for five or fewer persons receiving care that are within a single-family dwelling are permitted to comply with the *International Residential Code* provided an *automatic sprinkler system* is installed in accordance with Section 903.3.1.3 or Section P2904 of the *International Residential Code*.

310.5.2 Lodging houses. Owner-occupied *lodging houses* with five or fewer *guest rooms* shall be permitted to be constructed in accordance with the *International Residential Code*.

310.6 Residential Group R-4. Residential Group R-4 occupancy shall include buildings, structures or portions thereof for more than five but not more than 16 persons, excluding staff, who reside on a 24-hour basis in a supervised residential environment and receive *custodial care*. Buildings of Group R-4 shall be classified as one of the occupancy conditions specified in Section 310.6.1 or 310.6.2. The persons receiving care are capable of self-preservation. This group shall include, but not be limited to, the following:

Alcohol and drug centers
Assisted living facilities
Congregate care facilities
Group homes
Halfway houses
Residential board and care facilities
Social rehabilitation facilities

Group R-4 occupancies shall meet the requirements for construction as defined for Group R-3, except as otherwise provided for in this code.

310.6.1 Condition 1. This occupancy condition shall include buildings in which all persons receiving custodial care, without any assistance, are capable of responding to an emergency situation to complete building evacuation.

310.6.2 Condition 2. This occupancy condition shall include buildings in which there are any persons receiving custodial care who require limited verbal or physical assistance while responding to an emergency situation to complete building evacuation.

SECTION 311
STORAGE GROUP S

311.1 Storage Group S. Storage Group S occupancy includes, among others, the use of a building or structure, or a portion thereof, for storage that is not classified as a hazardous occupancy.

311.1.1 Accessory storage spaces. A room or space used for storage purposes that is less than 100 square feet (9.3 m^2) in area and accessory to another occupancy shall be classified as part of that occupancy. The aggregate area of such rooms or spaces shall not exceed the allowable area limits of Section 508.2.

311.2 Moderate-hazard storage, Group S-1. Storage Group S-1 occupancies are buildings occupied for storage uses that are not classified as Group S-2, including, but not limited to, storage of the following:

Aerosols, Levels 2 and 3
Aircraft hangar (storage and repair)
Bags: cloth, burlap and paper
Bamboos and rattan
Baskets
Belting: canvas and leather
Books and paper in rolls or packs
Boots and shoes
Buttons, including cloth covered, pearl or bone
Cardboard and cardboard boxes
Clothing, woolen wearing apparel
Cordage
Dry boat storage (indoor)
Furniture
Furs
Glues, mucilage, pastes and size

Grains
Horns and combs, other than celluloid
Leather
Linoleum
Lumber
Motor vehicle repair garages complying with the maximum allowable quantities of hazardous materials listed in Table 307.1(1) (see Section 406.8)
Photo engravings
Resilient flooring
Silks
Soaps
Sugar
Tires, bulk storage of
Tobacco, cigars, cigarettes and snuff
Upholstery and mattresses
Wax candles

311.3 Low-hazard storage, Group S-2. Storage Group S-2 occupancies include, among others, buildings used for the storage of noncombustible materials such as products on wood pallets or in paper cartons with or without single thickness divisions; or in paper wrappings. Such products are permitted to have a negligible amount of plastic *trim*, such as knobs, handles or film wrapping. Group S-2 storage uses shall include, but not be limited to, storage of the following:

Asbestos
Beverages up to and including 16-percent alcohol in metal, glass or ceramic containers
Cement in bags
Chalk and crayons
Dairy products in nonwaxed coated paper containers
Dry cell batteries
Electrical coils
Electrical motors
Empty cans
Food products
Foods in noncombustible containers
Fresh fruits and vegetables in nonplastic trays or containers
Frozen foods
Glass
Glass bottles, empty or filled with noncombustible liquids
Gypsum board
Inert pigments
Ivory
Meats
Metal cabinets
Metal desks with plastic tops and *trim*
Metal parts
Metals
Mirrors
Oil-filled and other types of distribution transformers
Parking garages, open or enclosed
Porcelain and pottery
Stoves
Talc and soapstones
Washers and dryers

SECTION 312
UTILITY AND MISCELLANEOUS GROUP U

312.1 General. Buildings and structures of an accessory character and miscellaneous structures not classified in any specific occupancy shall be constructed, equipped and maintained to conform to the requirements of this code commensurate with the fire and life hazard incidental to their occupancy. Group U shall include, but not be limited to, the following:

Agricultural buildings
Aircraft hangars, accessory to a one- or two-family residence (see Section 412.5)
Barns
Carports
Fences more than 6 feet (1829 mm) in height
Grain silos, accessory to a residential occupancy
Greenhouses
Livestock shelters
Private garages
Retaining walls
Sheds
Stables
Tanks
Towers

CHAPTER 4

SPECIAL DETAILED REQUIREMENTS BASED ON USE AND OCCUPANCY

User note: Code change proposals to sections preceded by the designation [F] will be considered by the International Fire Code Development Committee during the 2016 (Group B) Code Development Cycle. See explanation on page iv.

SECTION 401
SCOPE

401.1 Detailed use and occupancy requirements. In addition to the occupancy and construction requirements in this code, the provisions of this chapter apply to the special uses and occupancies described herein.

SECTION 402
COVERED MALL AND OPEN MALL BUILDINGS

402.1 Applicability. The provisions of this section shall apply to buildings or structures defined herein as *covered or open mall buildings* not exceeding three floor levels at any point nor more than three *stories above grade plane*. Except as specifically required by this section, *covered and open mall buildings* shall meet applicable provisions of this code.

Exceptions:

1. Foyers and lobbies of Groups B, R-1 and R-2 are not required to comply with this section.
2. Buildings need not comply with the provisions of this section where they totally comply with other applicable provisions of this code.

402.1.1 Open space. A *covered mall building* and attached *anchor buildings* and parking garages shall be surrounded on all sides by a permanent open space or not less than 60 feet (18 288 mm). An *open mall building* and *anchor buildings* and parking garages adjoining the perimeter line shall be surrounded on all sides by a permanent open space of not less than 60 feet (18 288 mm).

Exception: The permanent open space of 60 feet (18 288 mm) shall be permitted to be reduced to not less than 40 feet (12 192 mm), provided the following requirements are met:

1. The reduced open space shall not be allowed for more than 75 percent of the perimeter of the *covered or open mall building* and *anchor buildings*;
2. The *exterior wall* facing the reduced open space shall have a *fire-resistance rating* of not less than 3 hours;
3. Openings in the *exterior wall* facing the reduced open space shall have opening protectives with a *fire protection rating* of not less than 3 hours; and
4. Group E, H, I or R occupancies are not located within the *covered or open mall building* or *anchor buildings*.

402.1.2 Open mall building perimeter line. For the purpose of this code, a perimeter line shall be established. The perimeter line shall encircle all buildings and structures that comprise the *open mall building* and shall encompass any open-air interior walkways, open-air courtyards or similar open-air spaces. The perimeter line shall define the extent of the *open mall building*. *Anchor buildings* and parking structures shall be outside of the perimeter line and are not considered as part of the *open mall building*.

402.2 Definitions. The following terms are defined in Chapter 2:

ANCHOR BUILDING.

COVERED MALL BUILDING.

Mall.

Open mall.

Open mall building.

FOOD COURT.

GROSS LEASABLE AREA.

402.3 Lease plan. Each *owner* of a *covered mall building* or of an *open mall building* shall provide both the building and fire departments with a lease plan showing the location of each occupancy and its *exits* after the certificate of occupancy has been issued. No modifications or changes in occupancy or use shall be made from that shown on the lease plan without prior approval of the *building official*.

402.4 Construction. The construction of *covered and open mall buildings*, *anchor buildings* and parking garages associated with a *mall* building shall comply with Sections 402.4.1 through 402.4.3.

402.4.1 Area and types of construction. The *building area* and type of construction of *covered mall* or *open mall buildings*, *anchor buildings* and parking garages shall comply with this section.

402.4.1.1 Covered and open mall buildings. The *building area* of any *covered mall* or *open mall building* shall not be limited provided the *covered mall* or *open mall building* does not exceed three floor levels at any point nor three *stories above grade plane*, and is of Type I, II, III or IV construction.

402.4.1.2 Anchor buildings. The *building area* and *building height* of any *anchor building* shall be based on the type of construction as required by Section 503 as modified by Sections 504 and 506.

Exception: The *building area* of any *anchor building* shall not be limited provided the *anchor building* is not more than three *stories above grade plane*, and is of Type I, II, III or IV construction.

402.4.1.3 Parking garage. The *building area* and *building height* of any parking garage, open or enclosed, shall be based on the type of construction as required by Sections 406.5 and 406.6, respectively.

402.4.2 Fire-resistance-rated separation. Fire-resistance-rated separation is not required between tenant spaces and the *mall*. Fire-resistance-rated separation is not required between a *food court* and adjacent tenant spaces or the *mall*.

402.4.2.1 Tenant separations. Each tenant space shall be separated from other tenant spaces by a *fire partition* complying with Section 708. A tenant separation wall is not required between any tenant space and the *mall*.

402.4.2.2 Anchor building separation. An *anchor building* shall be separated from the *covered or open mall building* by *fire walls* complying with Section 706.

Exceptions:

1. *Anchor buildings* of not more than three *stories above grade plane* that have an occupancy classification the same as that permitted for tenants of the *mall building* shall be separated by 2-hour fire-resistance-rated *fire barriers* complying with Section 707.
2. The exterior walls of *anchor buildings* separated from an *open mall building* by an *open mall* shall comply with Table 602.

402.4.2.2.1 Openings between anchor building and mall. Except for the separation between Group R-1 *sleeping units* and the *mall*, openings between *anchor buildings* of Type IA, IB, IIA or IIB construction and the *mall* need not be protected.

402.4.2.3 Parking garages. An attached garage for the storage of passenger vehicles having a capacity of not more than nine persons and *open parking garages* shall be considered as a separate building where it is separated from the *covered or open mall building* or *anchor building* by not less than 2-hour *fire barriers* constructed in accordance with Section 707 or *horizontal assemblies* constructed in accordance with Section 711, or both.

Parking garages, open or enclosed, which are separated from *covered mall buildings*, *open mall buildings* or *anchor buildings*, shall comply with the provisions of Table 602.

Pedestrian walkways and tunnels that connect garages to *mall* buildings or *anchor buildings* shall be constructed in accordance with Section 3104.

402.4.3 Open mall construction. Floor assemblies in, and *roof assemblies* over, the *open mall* of an *open mall building* shall be open to the atmosphere for not less than 20 feet (9096 mm), measured perpendicular from the face of the tenant spaces on the lowest level, from edge of balcony to edge of balcony on upper floors and from edge of roof line to edge of roof line. The openings within, or the unroofed area of, an *open mall* shall extend from the lowest/grade level of the open mall through the entire *roof assembly*. Balconies on upper levels of the *mall* shall not project into the required width of the opening.

402.4.3.1 Pedestrian walkways. *Pedestrian walkways* connecting balconies in an *open mall* shall be located not less than 20 feet (9096 mm) from any other *pedestrian walkway*.

[F] 402.5 Automatic sprinkler system. *Covered* and *open mall buildings* and buildings connected shall be equipped throughout with an *automatic sprinkler system* in accordance with Section 903.3.1.1, which shall comply with all of the following:

1. The *automatic sprinkler system* shall be complete and operative throughout occupied space in the *mall building* prior to occupancy of any of the tenant spaces. Unoccupied tenant spaces shall be similarly protected unless provided with *approved* alternative protection.
2. Sprinkler protection for the *mall* of a *covered mall building* shall be independent from that provided for tenant spaces or *anchor buildings*.
3. Sprinkler protection for the tenant spaces of an *open mall building* shall be independent from that provided for *anchor buildings*.
4. Sprinkler protection shall be provided beneath exterior circulation balconies located adjacent to an *open mall*.
5. Where tenant spaces are supplied by the same system, they shall be independently controlled.

Exception: An *automatic sprinkler system* shall not be required in spaces or areas of *open parking garages* separated from the *covered or open mall building* in accordance with Section 402.4.2.3 and constructed in accordance with Section 406.5.

402.6 Interior finishes and features. Interior finishes within the *mall* and installations within the *mall* shall comply with Sections 402.6.1 through 402.6.4.

402.6.1 Interior finish. *Interior wall* and *ceiling finishes* within the *mall* of a *covered mall building* and within the *exits* of *covered or open mall buildings* shall have a minimum *flame spread index* and smoke-developed index of Class B in accordance with Chapter 8. *Interior floor finishes* shall meet the requirements of Section 804.

402.6.2 Kiosks. Kiosks and similar structures (temporary or permanent) located within the *mall* of a *covered mall building* or within the perimeter line of an *open mall building* shall meet the following requirements:

1. Combustible kiosks or other structures shall not be located within a *covered* or *open mall* unless constructed of any of the following materials:

1.1. *Fire-retardant-treated* wood complying with Section 2303.2.

1.2. Foam plastics having a maximum heat release rate not greater than 100 kW (105 Btu/h) when tested in accordance with the exhibit booth protocol in UL 1975 or when tested in accordance with NFPA 289 using the 20 kW ignition source.

1.3. Aluminum composite material (ACM) meeting the requirements of Class A *interior finish* in accordance with Chapter 8 when tested as an assembly in the maximum thickness intended.

2. Kiosks or similar structures located within the *mall* shall be provided with *approved automatic sprinkler system* and detection devices.

3. The horizontal separation between kiosks or groupings thereof and other structures within the *mall* shall be not less than 20 feet (6096 mm).

4. Each kiosk or similar structure or groupings thereof shall have an area not greater than 300 square feet (28 m^2).

402.6.3 Children's play structures. Children's play structures located within the *mall* of a *covered mall building* or within the perimeter line of an *open mall building* shall comply with Section 424. The horizontal separation between children's play structures, kiosks and similar structures within the *mall* shall be not less than 20 feet (6096 mm).

402.6.4 Plastic signs. Plastic signs affixed to the storefront of any tenant space facing a *mall* or *open mall* shall be limited as specified in Sections 402.6.4.1 through 402.6.4.5.

402.6.4.1 Area. Plastic signs shall be not more than 20 percent of the wall area facing the *mall*.

402.6.4.2 Height and width. Plastic signs shall be not greater than 36 inches (914 mm) in height, except that where the sign is vertical, the height shall be not greater than 96 inches (2438 mm) and the width shall be not greater than 36 inches (914 mm).

402.6.4.3 Location. Plastic signs shall be located not less than 18 inches (457 mm) from adjacent tenants.

402.6.4.4 Plastics other than foam plastics. Plastics other than foam plastics used in signs shall be light-transmitting plastics complying with Section 2606.4 or shall have a self-ignition temperature of 650°F (343°C) or greater when tested in accordance with ASTM D 1929, and a *flame spread index* not greater than 75 and smoke-developed index not greater than 450 when tested in the manner intended for use in accordance with ASTM E 84 or UL 723 or meet the acceptance criteria of Section 803.1.2.1 when tested in accordance with NFPA 286.

402.6.4.4.1 Encasement. Edges and backs of plastic signs in the *mall* shall be fully encased in metal.

402.6.4.5 Foam plastics. Foam plastics used in signs shall have flame-retardant characteristics such that the sign has a maximum heat-release rate of 150 kilowatts when tested in accordance with UL 1975 or when tested in accordance with NFPA 289 using the 20 kW ignition source, and the foam plastics shall have the physical characteristics specified in this section. Foam plastics used in signs installed in accordance with Section 402.6.4 shall not be required to comply with the *flame spread* and smoke-developed indices specified in Section 2603.3.

402.6.4.5.1 Density. The density of foam plastics used in signs shall be not less than 20 pounds per cubic foot (pcf) (320 kg/ m^3).

402.6.4.5.2 Thickness. The thickness of foam plastic signs shall not be greater than $^1/_2$ inch (12.7 mm).

[F] 402.7 Emergency systems. *Covered and open mall buildings, anchor buildings* and associated parking garages shall be provided with emergency systems complying with Sections 402.7.1 through 402.7.5.

[F] 402.7.1 Standpipe system. *Covered and open mall buildings* shall be equipped throughout with a standpipe system as required by Section 905.3.3.

[F] 402.7.2 Smoke control. Where a *covered mall building* contains an *atrium*, a smoke control system shall be provided in accordance with Section 404.5.

Exception: A smoke control system is not required in *covered mall buildings* where an *atrium* connects only two stories.

[F] 402.7.3 Emergency power. *Covered mall buildings* greater than 50,000 square feet (4645 m^2) in area and *open mall buildings* greater than 50,000 square feet (4645 m^2) within the established perimeter line shall be provided with emergency power that is capable of operating the *emergency voice/alarm communication system* in accordance with Section 2702.

[F] 402.7.4 Emergency voice/alarm communication system. Where the total floor area is greater than 50,000 square feet (4645 m^2) within either a *covered mall building* or within the perimeter line of an *open mall building*, an *emergency voice/alarm communication system* shall be provided.

Emergency voice/alarm communication systems serving a *mall*, required or otherwise, shall be accessible to the fire department. The systems shall be provided in accordance with Section 907.5.2.2.

[F] 402.7.5 Fire department access to equipment. Rooms or areas containing controls for air-conditioning systems, *automatic fire-extinguishing systems, automatic sprinkler systems* or other detection, suppression or control elements shall be identified for use by the fire department.

402.8 Means of egress. *Covered mall buildings, open mall buildings* and each tenant space within a mall building shall be provided with *means of egress* as required by this section and this code. Where there is a conflict between the requirements of this code and the requirements of Sections 402.8.1

through 402.8.8, the requirements of Sections 402.8.1 through 402.8.8 shall apply.

402.8.1 Mall width. For the purpose of providing required egress, *malls* are permitted to be considered as *corridors* but need not comply with the requirements of Section 1005.1 of this code where the width of the *mall* is as specified in this section.

402.8.1.1 Minimum width. The aggregate clear egress width of the *mall* in either a *covered or open mall building* shall be not less than 20 feet (6096 mm). The *mall* width shall be sufficient to accommodate the *occupant load* served. No portion of the minimum required aggregate egress width shall be less than 10 feet (3048 mm) measured to a height of 8 feet (2438 mm) between any projection of a tenant space bordering the *mall* and the nearest kiosk, vending machine, bench, display opening, *food court* or other obstruction to *means of egress* travel.

402.8.2 Determination of occupant load. The *occupant load* permitted in any individual tenant space in a *covered or open mall building* shall be determined as required by this code. *Means of egress* requirements for individual tenant spaces shall be based on the *occupant load* thus determined.

402.8.2.1 Occupant formula. In determining required *means of egress* of the *mall*, the number of occupants for whom *means of egress* are to be provided shall be based on *gross leasable area* of the *covered or open mall building* (excluding *anchor buildings*) and the *occupant load* factor as determined by Equation 4-1.

$$OLF = (0.00007)(GLA) + 25 \qquad \textbf{(Equation 4-1)}$$

where:

OLF = The *occupant load* factor (square feet per person).

GLA = The *gross leasable area* (square feet).

Exception: Tenant spaces attached to a *covered or open mall building* but with a *means of egress* system that is totally independent of the *open mall* of an *open mall building* or of a *covered mall building* shall not be considered as *gross leasable area* for determining the required *means of egress* for the *mall building*.

402.8.2.2 OLF range. The *occupant load* factor (*OLF*) is not required to be less than 30 and shall not exceed 50.

402.8.2.3 Anchor buildings. The *occupant load* of *anchor buildings* opening into the *mall* shall not be included in computing the total number of occupants for the *mall*.

402.8.2.4 Food courts. The *occupant load* of a *food court* shall be determined in accordance with Section 1004. For the purposes of determining the *means of egress* requirements for the *mall*, the *food court occupant load* shall be added to the *occupant load* of the *covered or open mall building* as calculated above.

402.8.3 Number of means of egress. Wherever the distance of travel to the *mall* from any location within a tenant space used by persons other than employees is greater than 75 feet (22 860 mm) or the tenant space has an *occupant load* of 50 or more, no fewer than two *means of egress* shall be provided.

402.8.4 Arrangements of means of egress. Assembly occupancies with an *occupant load* of 500 or more located within a *covered mall building* shall be so located such that their entrance will be immediately adjacent to a principal entrance to the *mall* and shall have not less than one-half of their required *means of egress* opening directly to the exterior of the *covered mall building*. Assembly occupancies located within the perimeter line of an *open mall building* shall be permitted to have their main *exit* open to the *open mall*.

402.8.4.1 Anchor building means of egress. Required *means of egress* for *anchor buildings* shall be provided independently from the *mall means of egress* system. The *occupant load* of *anchor buildings* opening into the *mall* shall not be included in determining *means of egress* requirements for the *mall*. The path of egress travel of *malls* shall not exit through *anchor buildings*. *Malls* terminating at an *anchor building* where no other *means of egress* has been provided shall be considered as a dead-end *mall*.

402.8.5 Distance to exits. Within each individual tenant space in a *covered or open mall building*, the distance of travel from any point to an *exit* or entrance to the *mall* shall be not greater than 200 feet (60 960 mm).

The distance of travel from any point within a *mall* of a *covered mall building* to an *exit* shall be not greater than 200 feet (60 960 mm). The maximum distance of travel from any point within an *open mall* to the perimeter line of the *open mall building* shall be not greater than 200 feet (60 960 mm).

402.8.6 Access to exits. Where more than one *exit* is required, they shall be so arranged that it is possible to travel in either direction from any point in a *mall* of a *covered mall building* to separate *exits* or from any point in an *open mall* of an *open mall building* to two separate locations on the perimeter line, provided neither location is an exterior wall of an *anchor building* or parking garage. The width of an *exit passageway* or *corridor* from a *mall* shall be not less than 66 inches (1676 mm).

Exception: Access to exits is permitted by way of a dead-end *mall* that does not exceed a length equal to twice the width of the *mall* measured at the narrowest location within the dead-end portion of the *mall*.

402.8.6.1 Exit passageways. Where *exit passageways* provide a secondary *means of egress* from a tenant space, doorways to the *exit passageway* shall be protected by 1-hour *fire door assemblies* that are self- or automatic-closing by smoke detection in accordance with Section 716.5.9.3.

402.8.7 Service areas fronting on exit passageways. Mechanical rooms, electrical rooms, building service areas

and service elevators are permitted to open directly into *exit passageways*, provided the *exit passageway* is separated from such rooms with not less than 1-hour *fire barriers* constructed in accordance with Section 707 or *horizontal assemblies* constructed in accordance with Section 711, or both. The *fire protection rating* of openings in the *fire barriers* shall be not less than 1 hour.

402.8.8 Security grilles and doors. Horizontal sliding or vertical security grilles or doors that are a part of a required *means of egress* shall conform to the following:

1. Doors and grilles shall remain in the full open position during the period of occupancy by the general public.
2. Doors or grilles shall not be brought to the closed position when there are 10 or more persons occupying spaces served by a single *exit* or 50 or more persons occupying spaces served by more than one *exit*.
3. The doors or grilles shall be openable from within without the use of any special knowledge or effort where the space is occupied.
4. Where two or more *exits* are required, not more than one-half of the *exits* shall be permitted to include either a horizontal sliding or vertical rolling grille or door.

SECTION 403
HIGH-RISE BUILDINGS

403.1 Applicability. *High-rise buildings* shall comply with Sections 403.2 through 403.6.

Exception: The provisions of Sections 403.2 through 403.6 shall not apply to the following buildings and structures:

1. Airport traffic control towers in accordance with Section 412.3.
2. *Open parking garages* in accordance with Section 406.5.
3. The portion of a building containing a Group A-5 occupancy in accordance with Section 303.6.
4. Special industrial occupancies in accordance with Section 503.1.1.
5. Buildings with:
   - 5.1. A Group H-1 occupancy;
   - 5.2. A Group H-2 occupancy in accordance with Section 415.8, 415.9.2, 415.9.3 or 426.1; or,
   - 5.3. A Group H-3 occupancy in accordance with Section 415.8.

403.2 Construction. The construction of *high-rise buildings* shall comply with the provisions of Sections 403.2.1 through 403.2.4.

403.2.1 Reduction in fire-resistance rating. The *fire-resistance-rating* reductions listed in Sections 403.2.1.1 and 403.2.1.2 shall be allowed in buildings that have sprinkler control valves equipped with supervisory initiating devices and water-flow initiating devices for each floor.

403.2.1.1 Type of construction. The following reductions in the minimum *fire-resistance rating* of the building elements in Table 601 shall be permitted as follows:

1. For buildings not greater than 420 feet (128 000 mm) in *building height*, the *fire-resistance rating* of the building elements in Type IA construction shall be permitted to be reduced to the minimum *fire-resistance ratings* for the building elements in Type IB.

   Exception: The required *fire-resistance rating* of columns supporting floors shall not be reduced.
2. In other than Group F-1, M and S-1 occupancies, the *fire-resistance rating* of the building elements in Type IB construction shall be permitted to be reduced to the *fire-resistance ratings* in Type IIA.
3. The *building height* and *building area* limitations of a building containing building elements with reduced *fire-resistance ratings* shall be permitted to be the same as the building without such reductions.

403.2.1.2 Shaft enclosures. For buildings not greater than 420 feet (128 000 mm) in *building height*, the required *fire-resistance rating* of the *fire barriers* enclosing vertical *shafts*, other than *interior exit stairway* and elevator hoistway enclosures, is permitted to be reduced to 1 hour where automatic sprinklers are installed within the *shafts* at the top and at alternate floor levels.

403.2.2 Seismic considerations. For seismic considerations, see Chapter 16.

403.2.3 Structural integrity of interior exit stairways and elevator hoistway enclosures. For *high-rise buildings* of *Risk Category* III or IV in accordance with Section 1604.5, and for all buildings that are more than 420 feet (128 000 mm) in *building height*, enclosures for *interior exit stairways* and elevator hoistway enclosures shall comply with Sections 403.2.3.1 through 403.2.3.4.

403.2.3.1 Wall assembly. The wall assemblies making up the enclosures for *interior exit stairways* and elevator hoistway enclosures shall meet or exceed Soft Body Impact Classification Level 2 as measured by the test method described in ASTM C 1629/C 1629M.

403.2.3.2 Wall assembly materials. The face of the wall assemblies making up the enclosures for *interior exit stairways* and elevator hoistway enclosures that are not exposed to the interior of the enclosures for *interior exit stairways* or elevator hoistway enclosure shall be constructed in accordance with one of the following methods:

1. The wall assembly shall incorporate no fewer than two layers of impact-resistant construction

board each of which meets or exceeds Hard Body Impact Classification Level 2 as measured by the test method described in ASTM C 1629/C 1629M.

2. The wall assembly shall incorporate no fewer than one layer of impact-resistant construction material that meets or exceeds Hard Body Impact Classification Level 3 as measured by the test method described in ASTM C 1629/C 1629M.
3. The wall assembly incorporates multiple layers of any material, tested in tandem, that meets or exceeds Hard Body Impact Classification Level 3 as measured by the test method described in ASTM C 1629/C 1629M.

403.2.3.3 Concrete and masonry walls. Concrete or masonry walls shall be deemed to satisfy the requirements of Sections 403.2.3.1 and 403.2.3.2.

403.2.3.4 Other wall assemblies. Any other wall assembly that provides impact resistance equivalent to that required by Sections 403.2.3.1 and 403.2.3.2 for Hard Body Impact Classification Level 3, as measured by the test method described in ASTM C 1629/C 1629M, shall be permitted.

403.2.4 Sprayed fire-resistant materials (SFRM). The bond strength of the SFRM installed throughout the building shall be in accordance with Table 403.2.4.

TABLE 403.2.4
MINIMUM BOND STRENGTH

HEIGHT OF BUILDING[a]	SFRM MINIMUM BOND STRENGTH
Up to 420 feet	430 psf
Greater than 420 feet	1,000 psf

For SI: 1 foot = 304.8 mm, 1 pound per square foot (psf) = 0.0479 kW/m^2.
a. Above the lowest level of fire department vehicle access.

[F] 403.3 Automatic sprinkler system. Buildings and structures shall be equipped throughout with an *automatic sprinkler system* in accordance with Section 903.3.1.1 and a secondary water supply where required by Section 403.3.3.

Exception: An *automatic sprinkler system* shall not be required in spaces or areas of:

1. *Open parking garages* in accordance with Section 406.5.
2. Telecommunications equipment buildings used exclusively for telecommunications equipment, associated electrical power distribution equipment, batteries and standby engines, provided that those spaces or areas are equipped throughout with an automatic fire detection system in accordance with Section 907.2 and are separated from the remainder of the building by not less than 1-hour *fire barriers* constructed in accordance with Section 707 or not less than 2-hour *horizontal assemblies* constructed in accordance with Section 711, or both.

[F] 403.3.1 Number of sprinkler risers and system design. Each sprinkler system zone in buildings that are more than 420 feet (128 000 mm) in *building height* shall be supplied by no fewer than two risers. Each riser shall supply sprinklers on alternate floors. If more than two risers are provided for a zone, sprinklers on adjacent floors shall not be supplied from the same riser.

[F] 403.3.1.1 Riser location. Sprinkler risers shall be placed in *interior exit stairways* and ramps that are remotely located in accordance with Section 1007.1.

[F] 403.3.2 Water supply to required fire pumps. In buildings that are more than 420 feet (128 000 mm) in *building height*, required fire pumps shall be supplied by connections to no fewer than two water mains located in different streets. Separate supply piping shall be provided between each connection to the water main and the pumps. Each connection and the supply piping between the connection and the pumps shall be sized to supply the flow and pressure required for the pumps to operate.

Exception: Two connections to the same main shall be permitted provided the main is valved such that an interruption can be isolated so that the water supply will continue without interruption through no fewer than one of the connections.

[F]403.3.3 Secondary water supply. An automatic secondary on-site water supply having a capacity not less than the hydraulically calculated sprinkler demand, including the hose stream requirement, shall be provided for *high-rise buildings* assigned to Seismic Design Category C, D, E or F as determined by Section 1613. An additional fire pump shall not be required for the secondary water supply unless needed to provide the minimum design intake pressure at the suction side of the fire pump supplying the *automatic sprinkler system*. The secondary water supply shall have a duration of not less than 30 minutes.

[F] 403.3.4 Fire pump room. Fire pumps shall be located in rooms protected in accordance with Section 913.2.1.

[F] 403.4 Emergency systems. The detection, alarm and emergency systems of *high-rise buildings* shall comply with Sections 403.4.1 through 403.4.8.

[F] 403.4.1 Smoke detection. Smoke detection shall be provided in accordance with Section 907.2.13.1.

[F] 403.4.2 Fire alarm system. A *fire alarm* system shall be provided in accordance with Section 907.2.13.

[F] 403.4.3 Standpipe system. A *high-rise building* shall be equipped with a standpipe system as required by Section 905.3.

[F] 403.4.4 Emergency voice/alarm communication system. An *emergency voice/alarm communication system* shall be provided in accordance with Section 907.5.2.2.

[F] 403.4.5 Emergency responder radio coverage. Emergency responder radio coverage shall be provided in accordance with Section 510 of the *International Fire Code*.

[F] 403.4.6 Fire command. A *fire command center* complying with Section 911 shall be provided in a location *approved* by the fire department.

403.4.7 Smoke removal. To facilitate smoke removal in post-fire salvage and overhaul operations, buildings and structures shall be equipped with natural or mechanical *ventilation* for removal of products of combustion in accordance with one of the following:

1. Easily identifiable, manually operable windows or panels shall be distributed around the perimeter of each floor at not more than 50-foot (15 240 mm) intervals. The area of operable windows or panels shall be not less than 40 square feet (3.7 m^2) per 50 linear feet (15 240 mm) of perimeter.

   Exceptions:

   1. In Group R-1 occupancies, each *sleeping unit* or suite having an *exterior wall* shall be permitted to be provided with 2 square feet (0.19 m^2) of venting area in lieu of the area specified in Item 1.
   2. Windows shall be permitted to be fixed provided that glazing can be cleared by fire fighters.
2. Mechanical air-handling equipment providing one exhaust air change every 15 minutes for the area involved. Return and exhaust air shall be moved directly to the outside without recirculation to other portions of the building.
3. Any other *approved* design that will produce equivalent results.

[F] 403.4.8 Standby and emergency power. A standby power system complying with Section 2702 and Section 3003 shall be provided for the standby power loads specified in Section 403.4.8.2. An emergency power system complying with Section 2702 shall be provided for the emergency power loads specified in Section 403.4.8.3.

[F] 403.4.8.1 Equipment room. If the standby or emergency power system includes a generator set inside a building, the system shall be located in a separate room enclosed with 2-hour *fire barriers* constructed in accordance with Section 707 or *horizontal assemblies* constructed in accordance with Section 711, or both. System supervision with manual start and transfer features shall be provided at the *fire command center.*

Exception: In Group I-2, Condition 2, manual start and transfer features for the critical branch of the emergency power are not required to be provided at the *fire command center.*

[F] 403.4.8.2 Fuel line piping protection. Fuel lines supplying a generator set inside a building shall be separated from areas of the building other than the room the generator is located in by an approved method or assembly that has a fire-resistance rating of not less than 2 hours. Where the building is protected throughout with an automatic sprinkler system installed in accordance with Section 903.3.1.1 or 903.3.1.2, the required fire-resistance rating shall be reduced to 1 hour.

[F] 403.4.8.3 Standby power loads. The following are classified as standby power loads:

1. Power and lighting for the *fire command center* required by Section 403.4.6.
2. *Ventilation* and automatic fire detection equipment for *smokeproof enclosures.*
3. Elevators.
4. Where elevators are provided in a *high-rise building* for *accessible means of egress*, fire service access or occupant self-evacuation, the standby power system shall also comply with Sections 1009.4, 3007 or 3008, as applicable.

[F] 403.4.8.4 Emergency power loads. The following are classified as emergency power loads:

1. Exit signs and *means of egress* illumination required by Chapter 10.
2. Elevator car lighting.
3. *Emergency voice/alarm communications systems.*
4. Automatic fire detection systems.
5. *Fire alarm* systems.
6. Electrically powered fire pumps.

403.5 Means of egress and evacuation. The *means of egress* in *high-rise buildings* shall comply with Sections 403.5.1 through 403.5.6.

403.5.1 Remoteness of interior exit stairways. Required *interior exit stairways* shall be separated by a distance not less than 30 feet (9144 mm) or not less than one-fourth of the length of the maximum overall diagonal dimension of the building or area to be served, whichever is less. The distance shall be measured in a straight line between the nearest points of the enclosure surrounding the *interior exit stairways.* In buildings with three or more *interior exit stairways,* no fewer than two of the *interior exit stairways* shall comply with this section. Interlocking or *scissor stairs* shall be counted as one *interior exit stairway.*

403.5.2 Additional interior exit stairway. For buildings other than Group R-2 that are more than 420 feet (128 000 mm) in *building height*, one additional *interior exit stairway* meeting the requirements of Sections 1011 and 1023 shall be provided in addition to the minimum number of *exits* required by Section 1006.3. The total width of any combination of remaining *interior exit stairways* with one *interior exit stairway* removed shall be not less than the total width required by Section 1005.1. *Scissor stairways* shall not be considered the additional *interior exit stairway* required by this section.

Exception: An additional *interior exit stairway* shall not be required to be installed in buildings having elevators used for occupant self-evacuation in accordance with Section 3008.

403.5.3 Stairway door operation. *Stairway* doors other than the *exit discharge* doors shall be permitted to be locked from the *stairway* side. *Stairway* doors that are

locked from the *stairway* side shall be capable of being unlocked simultaneously without unlatching upon a signal from the *fire command center.*

403.5.3.1 Stairway communication system. A telephone or other two-way communications system connected to an *approved constantly attended station* shall be provided at not less than every fifth floor in each *stairway* where the doors to the *stairway* are locked.

403.5.4 Smokeproof enclosures. Every required *interior exit stairway* serving floors more than 75 feet (22 860 mm) above the lowest level of fire department vehicle access shall be a *smokeproof enclosure* in accordance with Sections 909.20 and 1023.10.

403.5.5 Luminous egress path markings. Luminous egress path markings shall be provided in accordance with Section 1025.

403.5.6 Emergency escape and rescue. Emergency escape and rescue openings specified in Section 1030 are not required.

403.6 Elevators. Elevator installation and operation in *high-rise buildings* shall comply with Chapter 30 and Sections 403.6.1 and 403.6.2.

403.6.1 Fire service access elevator. In buildings with an occupied floor more than 120 feet (36 576 mm) above the lowest level of fire department vehicle access, no fewer than two fire service access elevators, or all elevators, whichever is less, shall be provided in accordance with Section 3007. Each fire service access elevator shall have a capacity of not less than 3,500 pounds (1588 kg) and shall comply with Section 3002.4.

403.6.2 Occupant evacuation elevators. Where installed in accordance with Section 3008, passenger elevators for general public use shall be permitted to be used for occupant self-evacuation.

SECTION 404
ATRIUMS

404.1 General. In other than Group H occupancies, and where permitted by Section 712.1.7, the provisions of Sections 404.1 through 404.10 shall apply to buildings or structures containing vertical openings defined as "Atriums."

404.1.1 Definition. The following term is defined in Chapter 2:

ATRIUM.

404.2 Use. The floor of the *atrium* shall not be used for other than low fire hazard uses and only *approved* materials and decorations in accordance with the *International Fire Code* shall be used in the *atrium* space.

Exception: The *atrium* floor area is permitted to be used for any *approved* use where the individual space is provided with an *automatic sprinkler system* in accordance with Section 903.3.1.1.

[F] 404.3 Automatic sprinkler protection. An *approved automatic sprinkler system* shall be installed throughout the entire building.

Exceptions:

1. That area of a building adjacent to or above the *atrium* need not be sprinklered provided that portion of the building is separated from the *atrium* portion by not less than 2-hour *fire barriers* constructed in accordance with Section 707 or *horizontal assemblies* constructed in accordance with Section 711, or both.
2. Where the ceiling of the *atrium* is more than 55 feet (16 764 mm) above the floor, sprinkler protection at the ceiling of the *atrium* is not required.

[F] 404.4 Fire alarm system. A *fire alarm* system shall be provided in accordance with Section 907.2.14.

404.5 Smoke control. A smoke control system shall be installed in accordance with Section 909.

Exception: In other than Group I-2, and Group I-1, Condition 2, smoke control is not required for *atriums* that connect only two *stories.*

404.6 Enclosure of atriums. *Atrium* spaces shall be separated from adjacent spaces by a 1-hour *fire barrier* constructed in accordance with Section 707 or a *horizontal assembly* constructed in accordance with Section 711, or both.

Exceptions:

1. A *fire barrier* is not required where a glass wall forming a smoke partition is provided. The glass wall shall comply with all of the following:
   - 1.1. Automatic sprinklers are provided along both sides of the separation wall and doors, or on the room side only if there is not a walkway on the *atrium* side. The sprinklers shall be located between 4 inches and 12 inches (102 mm and 305 mm) away from the glass and at intervals along the glass not greater than 6 feet (1829 mm). The sprinkler system shall be designed so that the entire surface of the glass is wet upon activation of the sprinkler system without obstruction;
   - 1.2. The glass wall shall be installed in a gasketed frame in a manner that the framing system deflects without breaking (loading) the glass before the sprinkler system operates; and
   - 1.3. Where glass doors are provided in the glass wall, they shall be either *self-closing* or automatic-closing.
2. A *fire barrier* is not required where a glass-block wall assembly complying with Section 2110 and having a $^3/_4$-hour *fire protection rating* is provided.
3. A *fire barrier* is not required between the *atrium* and the adjoining spaces of any three floors of the *atrium*

provided such spaces are accounted for in the design of the smoke control system.

[F] 404.7 Standby power. Equipment required to provide smoke control shall be provided with standby power in accordance with Section 909.11.

404.8 Interior finish. The *interior finish* of walls and ceilings of the *atrium* shall be not less than Class B with no reduction in class for sprinkler protection.

404.9 Exit access travel distance. *Exit access* travel distance for areas open to an *atrium* shall comply with the requirements of this section.

404.9.1 Egress not through the atrium. Where required access to the *exits* is not through the *atrium*, *exit access* travel distance shall comply with Section 1017.

404.9.2 Exit access travel distance at the level of exit discharge. Where the path of egress travel is through an *atrium* space, *exit access* travel distance at the *level of exit discharge* shall be determined in accordance with Section 1017.

404.9.3 Exit access travel distance at other than the level of exit discharge. Where the path of egress travel is not at the *level of exit discharge* from the *atrium*, that portion of the total permitted *exit access* travel distance that occurs within the *atrium* shall be not greater than 200 feet (60 960 mm).

404.10 Interior exit stairways. A maximum of 50 percent of *interior exit stairways* are permitted to egress through an *atrium* on the *level of exit discharge* in accordance with Section 1028.

SECTION 405
UNDERGROUND BUILDINGS

405.1 General. The provisions of Sections 405.2 through 405.9 apply to building spaces having a floor level used for human occupancy more than 30 feet (9144 mm) below the finished floor of the lowest *level of exit discharge*.

Exceptions: The provisions of Section 405 are not applicable to the following buildings or portions of buildings:

1. One- and two-family *dwellings*, sprinklered in accordance with Section 903.3.1.3.
2. Parking garages provided with *automatic sprinkler systems* in compliance with Section 405.3.
3. Fixed guideway transit systems.
4. *Grandstands*, *bleachers*, stadiums, arenas and similar facilities.
5. Where the lowest *story* is the only *story* that would qualify the building as an underground building and has an area not greater than 1,500 square feet (139 m^2) and has an *occupant load* less than 10.
6. Pumping stations and other similar mechanical spaces intended only for limited periodic use by service or maintenance personnel.

405.2 Construction requirements. The underground portion of the building shall be of Type I construction.

[F] 405.3 Automatic sprinkler system. The highest *level of exit discharge* serving the underground portions of the building and all levels below shall be equipped with an *automatic sprinkler system* installed in accordance with Section 903.3.1.1. Water-flow switches and control valves shall be supervised in accordance with Section 903.4.

405.4 Compartmentation. Compartmentation shall be in accordance with Sections 405.4.1 through 405.4.3.

405.4.1 Number of compartments. A building having a floor level more than 60 feet (18 288 mm) below the finished floor of the lowest *level of exit discharge* shall be divided into no fewer than two compartments of approximately equal size. Such compartmentation shall extend through the highest *level of exit discharge* serving the underground portions of the building and all levels below.

Exception: The lowest *story* need not be compartmented where the area is not greater than 1,500 square feet (139 m^2) and has an *occupant load* of less than 10.

405.4.2 Smoke barrier penetration. The compartments shall be separated from each other by a *smoke barrier* in accordance with Section 709. Penetrations between the two compartments shall be limited to plumbing and electrical piping and conduit that are firestopped in accordance with Section 714. Doorways shall be protected by *fire door assemblies* that are automatic-closing by smoke detection in accordance with Section 716.5.9.3 and are installed in accordance with NFPA 105 and Section 716.5.3. Where provided, each compartment shall have an air supply and an exhaust system independent of the other compartments.

405.4.3 Elevators. Where elevators are provided, each compartment shall have direct access to an elevator. Where an elevator serves more than one compartment, an elevator lobby shall be provided and shall be separated from each compartment by a *smoke barrier* in accordance with Section 709. Doors shall be gasketed, have a drop sill and be automatic-closing by smoke detection in accordance with Section 716.5.9.3.

405.5 Smoke control system. A smoke control system shall be provided in accordance with Sections 405.5.1 and 405.5.2.

405.5.1 Control system. A smoke control system is required to control the migration of products of combustion in accordance with Section 909 and the provisions of this section. Smoke control shall restrict movement of smoke to the general area of fire origin and maintain *means of egress* in a usable condition.

405.5.2 Compartment smoke control system. Where compartmentation is required, each compartment shall have an independent smoke control system. The system shall be automatically activated and capable of manual operation in accordance with Sections 907.2.18 and 907.2.19.

[F] 405.6 Fire alarm systems. A *fire alarm* system shall be provided where required by Sections 907.2.18 and 907.2.19.

405.7 Means of egress. *Means of egress* shall be in accordance with Sections 405.7.1 and 405.7.2.

405.7.1 Number of exits. Each floor level shall be provided with no fewer than two *exits*. Where compartmentation is required by Section 405.4, each compartment shall have no fewer than one *exit* and shall also have no fewer than one *exit access* doorway into the adjoining compartment.

405.7.2 Smokeproof enclosure. Every required *stairway* serving floor levels more than 30 feet (9144 mm) below the finished floor of its *level of exit discharge* shall comply with the requirements for a *smokeproof enclosure* as provided in Section 1023.10.

[F] 405.8 Standby and emergency power. A standby power system complying with Section 2702 shall be provided for the standby power loads specified in Section 405.8.1. An emergency power system complying with Section 2702 shall be provided for the emergency power loads specified in Section 405.8.2.

[F] 405.8.1 Standby power loads. The following loads are classified as standby power loads:

1. Smoke control system.
2. *Ventilation* and automatic fire detection equipment for *smokeproof enclosures*.
3. Fire pumps.
4. Elevators, as required in Section 3003.

[F] 405.8.2 Emergency power loads. The following loads are classified as emergency power loads:

1. *Emergency voice/alarm communications systems*.
2. *Fire alarm* systems.
3. Automatic fire detection systems.
4. Elevator car lighting.
5. *Means of egress* and exit sign illumination as required by Chapter 10.

[F] 405.9 Standpipe system. The underground building shall be equipped throughout with a standpipe system in accordance with Section 905.

SECTION 406
MOTOR-VEHICLE-RELATED OCCUPANCIES

406.1 General. Motor-vehicle-related occupancies shall comply with Sections 406.1 through 406.8.

406.2 Definitions. The following terms are defined in Chapter 2:

MECHANICAL-ACCESS OPEN PARKING GARAGES.

OPEN PARKING GARAGE.

PRIVATE GARAGE.

RAMP-ACCESS OPEN PARKING GARAGES.

406.3 Private garages and carports. Private garages and carports shall comply with Sections 406.3.1 through 406.3.6.

406.3.1 Classification. Private garages and carports shall be classified as Group U occupancies. Each private garage shall be not greater than 1,000 square feet (93 m^2) in area. Multiple private garages are permitted in a building where each private garage is separated from the other private garages by 1-hour *fire barriers* in accordance with Section 707, or 1-hour *horizontal assemblies* in accordance with Section 711, or both.

406.3.2 Clear height. In private garages and carports, the clear height in vehicle and pedestrian traffic areas shall be not less than 7 feet (2134 mm). Vehicle and pedestrian areas accommodating van-accessible parking shall comply with Section 1106.5.

406.3.3 Garage floor surfaces. Garage floor surfaces shall be of *approved* noncombustible material. The area of floor used for parking of automobiles or other vehicles shall be sloped to facilitate the movement of liquids to a drain or toward the main vehicle entry doorway.

406.3.4 Separation. For other than private garages adjacent to dwelling units, the separation of private garages from other occupancies shall comply with Section 508. Separation of private garages from *dwelling units* shall comply with Sections 406.3.4.1 through 406.3.4.3.

406.3.4.1 Dwelling unit separation. The private garage shall be separated from the *dwelling unit* and its *attic* area by means of gypsum board, not less than $^1/_2$ inch (12.7 mm) in thickness, applied to the garage side. Garages beneath habitable rooms shall be separated from all habitable rooms above by not less than a $^5/_8$-inch (15.9 mm) Type X gypsum board or equivalent and $^1/_2$-inch (12.7 mm) gypsum board applied to structures supporting the separation from habitable rooms above the garage. Door openings between a private garage and the *dwelling unit* shall be equipped with either solid wood doors or solid or honeycomb core steel doors not less than $1^3/_8$ inches (34.9 mm) in thickness, or doors in compliance with Section 716.5.3 with a fire protection rating of not less than 20 minutes. Doors shall be *self-closing* and self-latching.

406.3.4.2 Openings prohibited. Openings from a private garage directly into a room used for sleeping purposes shall not be permitted.

406.3.4.3 Ducts. Ducts in a private garage and ducts penetrating the walls or ceilings separating the *dwelling unit* from the garage, including its *attic* area, shall be constructed of sheet steel of not less than 0.019 inch (0.48 mm) in thickness and shall have no openings into the garage.

406.3.5 Carports. Carports shall be open on at least two sides. Carport floor surfaces shall be of an *approved* noncombustible material. Carports not open on at least two sides shall be considered a garage and shall comply with the requirements for private garages.

Exception: Asphalt surfaces shall be permitted at ground level in carports.

The area of floor used for parking of automobiles or other vehicles shall be sloped to facilitate the movement of liquids to a drain or toward the main vehicle entry doorway.

406.3.5.1 Carport separation. A separation is not required between a Group R-3 and U carport, provided the carport is entirely open on two or more sides and there are not enclosed areas above.

406.3.6 Automatic garage door openers. Automatic garage door openers, where provided, shall be *listed* in accordance with UL 325.

406.4 Public parking garages. Parking garages, other than *private garages*, shall be classified as public parking garages and shall comply with the provisions of Sections 406.4.2 through 406.4.8 and shall be classified as either an *open parking garage* or an enclosed parking garage. *Open parking garages* shall also comply with Section 406.5. Enclosed parking garages shall also comply with Section 406.6. See Section 510 for special provisions for parking garages.

406.4.1 Clear height. The clear height of each floor level in vehicle and pedestrian traffic areas shall be not less than 7 feet (2134 mm). Vehicle and pedestrian areas accommodating van-accessible parking shall comply with Section 1106.5.

406.4.2 Guards. Guards shall be provided in accordance with Section 1015. Guards serving as *vehicle barriers* shall comply with Sections 406.4.3 and 1015.

406.4.3 Vehicle barriers. *Vehicle barriers* not less than 2 feet 9 inches (835 mm) in height shall be placed where the vertical distance from the floor of a drive lane or parking space to the ground or surface directly below is greater than 1 foot (305 mm). *Vehicle barriers* shall comply with the loading requirements of Section 1607.8.3.

Exception: *Vehicle barriers* are not required in vehicle storage compartments in a mechanical access parking garage.

406.4.4 Ramps. Vehicle ramps shall not be considered as required *exits* unless pedestrian facilities are provided. Vehicle ramps that are utilized for vertical circulation as well as for parking shall not exceed a slope of 1:15 (6.67 percent).

406.4.5 Floor surface. Parking surfaces shall be of concrete or similar noncombustible and nonabsorbent materials.

The area of floor used for parking of automobiles or other vehicles shall be sloped to facilitate the movement of liquids to a drain or toward the main vehicle entry doorway.

Exceptions:

1. Asphalt parking surfaces shall be permitted at ground level.
2. Floors of Group S-2 parking garages shall not be required to have a sloped surface.

406.4.6 Mixed occupancy separation. Parking garages shall be separated from other occupancies in accordance with Section 508.1.

406.4.7 Special hazards. Connection of a parking garage with any room in which there is a fuel-fired appliance shall be by means of a vestibule providing a two-doorway separation.

Exception: A single door shall be allowed provided the sources of ignition in the appliance are not less than 18 inches (457 mm) above the floor.

406.4.8 Attached to rooms. Openings from a parking garage directly into a room used for sleeping purposes shall not be permitted.

406.5 Open parking garages. *Open parking garages* shall comply with Sections 406.5.1 through 406.5.11.

406.5.1 Construction. *Open parking garages* shall be of Type I, II or IV construction. *Open parking garages* shall meet the design requirements of Chapter 16. For *vehicle barriers*, see Section 406.4.3.

406.5.2 Openings. For natural *ventilation* purposes, the exterior side of the structure shall have uniformly distributed openings on two or more sides. The area of such openings in *exterior walls* on a tier shall be not less than 20 percent of the total perimeter wall area of each tier. The aggregate length of the openings considered to be providing natural *ventilation* shall be not less than 40 percent of the perimeter of the tier. Interior walls shall be not less than 20 percent open with uniformly distributed openings.

Exception: Openings are not required to be distributed over 40 percent of the building perimeter where the required openings are uniformly distributed over two opposing sides of the building.

406.5.2.1 Openings below grade. Where openings below grade provide required natural *ventilation*, the outside horizontal clear space shall be one and one-half times the depth of the opening. The width of the horizontal clear space shall be maintained from grade down to the bottom of the lowest required opening.

406.5.3 Uses. Mixed uses shall be allowed in the same building as an *open parking garage* subject to the provisions of Sections 402.4.2.3, 406.5.11, 508.1, 510.3, 510.4 and 510.7.

406.5.4 Area and height. Area and height of *open parking garages* shall be limited as set forth in Chapter 5 for Group S-2 occupancies and as further provided for in Section 508.1.

406.5.4.1 Single use. Where the *open parking garage* is used exclusively for the parking or storage of private motor vehicles, with no other uses in the building, the area and height shall be permitted to comply with Table 406.5.4, along with increases allowed by Section 406.5.5.

Exception: The grade-level tier is permitted to contain an office, waiting and toilet rooms having a total combined area of not more than 1,000 square feet (93 m^2). Such area need not be separated from the *open parking garage.*

In *open parking garages* having a spiral or sloping floor, the horizontal projection of the structure at any cross section shall not exceed the allowable area per

parking tier. In the case of an *open parking garage* having a continuous spiral floor, each 9 feet 6 inches (2896 mm) of height, or portion thereof, shall be considered a tier.

The clear height of a parking tier shall be not less than 7 feet (2134 mm), except that a lower clear height is permitted in mechanical-access *open parking garages* where *approved* by the *building official.*

406.5.5 Area and height increases. The allowable area and height of *open parking garages* shall be increased in accordance with the provisions of this section. Garages with sides open on three-fourths of the building's perimeter are permitted to be increased by 25 percent in area and one tier in height. Garages with sides open around the entire building's perimeter are permitted to be increased by 50 percent in area and one tier in height. For a side to be considered open under the above provisions, the total area of openings along the side shall not be less than 50 percent of the interior area of the side at each tier and such openings shall be equally distributed along the length of the tier. For purposes of calculating the interior area of the side, the height shall not exceed 7 feet (2134 mm).

Allowable tier areas in Table 406.5.4 shall be increased for *open parking garages* constructed to heights less than the table maximum. The gross tier area of the garage shall not exceed that permitted for the higher structure. No fewer than three sides of each such larger tier shall have continuous horizontal openings not less than 30 inches (762 mm) in clear height extending for not less than 80 percent of the length of the sides and no part of such larger tier shall be more than 200 feet (60 960 mm) horizontally from such an opening. In addition, each such opening shall face a street or *yard* accessible to a street with a width of not less than 30 feet (9144 mm) for the full length of the opening, and standpipes shall be provided in each such tier.

Open parking garages of Type II construction, with all sides open, shall be unlimited in allowable area where the *building height* does not exceed 75 feet (22 860 mm). For a side to be considered open, the total area of openings along the side shall be not less than 50 percent of the interior area of the side at each tier and such openings shall be equally distributed along the length of the tier. For purposes of calculating the interior area of the side, the height shall not exceed 7 feet (2134 mm). All portions of tiers shall be within 200 feet (60 960 mm) horizontally from such openings or other natural *ventilation* openings as defined in Section 406.5.2. These openings shall be permitted to be provided in *courts* with a minimum dimension of 20 feet (6096 mm) for the full width of the openings.

406.5.6 Fire separation distance. *Exterior walls* and openings in *exterior walls* shall comply with Tables 601 and 602. The distance to an adjacent *lot line* shall be determined in accordance with Table 602 and Section 705.

406.5.7 Means of egress. Where persons other than parking attendants are permitted, *open parking garages* shall meet the *means of egress* requirements of Chapter 10. Where no persons other than parking attendants are permitted, there shall be no fewer than two *exit stairways.* Each *exit stairway* shall be not less than 36 inches (914 mm) in width. Lifts shall be permitted to be installed for use of employees only, provided they are completely enclosed by noncombustible materials.

[F] 406.5.8 Standpipe system. An *open parking garage* shall be equipped with a standpipe system as required by Section 905.3.

406.5.9 Enclosure of vertical openings. Enclosure shall not be required for vertical openings except as specified in Section 406.5.7.

406.5.10 Ventilation. *Ventilation,* other than the percentage of openings specified in Section 406.5.2, shall not be required.

406.5.11 Prohibitions. The following uses and alterations are not permitted:

1. Vehicle repair work.
2. Parking of buses, trucks and similar vehicles.
3. Partial or complete closing of required openings in exterior walls by tarpaulins or any other means.
4. Dispensing of fuel.

406.6 Enclosed parking garages. Enclosed parking garages shall comply with Sections 406.6.1 through 406.6.3.

406.6.1 Heights and areas. Enclosed vehicle parking garages and portions thereof that do not meet the definition of *open parking garages* shall be limited to the allowable heights and areas specified in Sections 504 and 506 as modified by Section 507. Roof parking is permitted.

TABLE 406.5.4
OPEN PARKING GARAGES AREA AND HEIGHT

TYPE OF CONSTRUCTION	AREA PER TIER (square feet)	HEIGHT (in tiers)		
		Ramp access	Mechanical access	
			Automatic sprinkler system	
			No	Yes
IA	Unlimited	Unlimited	Unlimited	Unlimited
IB	Unlimited	12 tiers	12 tiers	18 tiers
IIA	50,000	10 tiers	10 tiers	15 tiers
IIB	50,000	8 tiers	8 tiers	12 tiers
IV	50,000	4 tiers	4 tiers	4 tiers

For SI: 1 square foot = 0.0929 m^2.

406.6.2 Ventilation. A mechanical *ventilation* system shall be provided in accordance with the *International Mechanical Code*.

[F] 406.6.3 Automatic sprinkler system. An enclosed parking garage shall be equipped with an *automatic sprinkler system* in accordance with Section 903.2.10.

406.7 Motor fuel-dispensing facilities. Motor fuel-dispensing facilities shall comply with the *International Fire Code* and Sections 406.7.1 and 406.7.2.

406.7.1 Vehicle fueling pad. The vehicle shall be fueled on noncoated concrete or other *approved* paving material having a resistance not exceeding 1 megohm as determined by the methodology in EN 1081.

406.7.2 Canopies. Canopies under which fuels are dispensed shall have a clear, unobstructed height of not less than 13 feet 6 inches (4115 mm) to the lowest projecting element in the vehicle drive-through area. Canopies and their supports over pumps shall be of noncombustible materials, *fire-retardant-treated wood* complying with Chapter 23, wood of Type IV sizes or of construction providing 1-hour *fire resistance*. Combustible materials used in or on a *canopy* shall comply with one of the following:

1. Shielded from the pumps by a noncombustible element of the *canopy*, or wood of Type IV sizes;
2. Plastics covered by aluminum facing having a thickness of not less than 0.010 inch (0.30 mm) or corrosion-resistant steel having a base metal thickness of not less than 0.016 inch (0.41 mm). The plastic shall have a *flame spread index* of 25 or less and a smoke-developed index of 450 or less when tested in the form intended for use in accordance with ASTM E 84 or UL 723 and a self-ignition temperature of 650°F (343°C) or greater when tested in accordance with ASTM D 1929; or
3. Panels constructed of light-transmitting plastic materials shall be permitted to be installed in *canopies* erected over motor vehicle fuel-dispensing station fuel dispensers, provided the panels are located not less than 10 feet (3048 mm) from any building on the same *lot* and face *yards* or streets not less than 40 feet (12 192 mm) in width on the other sides. The aggregate areas of plastics shall be not greater than 1,000 square feet (93 m^2). The maximum area of any individual panel shall be not greater than 100 square feet (9.3 m^2).

406.7.2.1 Canopies used to support gaseous hydrogen systems. *Canopies* that are used to shelter dispensing operations where flammable compressed gases are located on the roof of the *canopy* shall be in accordance with the following:

1. The *canopy* shall meet or exceed Type I construction requirements.
2. Operations located under *canopies* shall be limited to refueling only.
3. The *canopy* shall be constructed in a manner that prevents the accumulation of hydrogen gas.

406.8 Repair garages. Repair garages shall be constructed in accordance with the *International Fire Code* and Sections 406.8.1 through 406.8.6. This occupancy shall not include motor fuel-dispensing facilities, as regulated in Section 406.7.

406.8.1 Mixed uses. Mixed uses shall be allowed in the same building as a repair garage subject to the provisions of Section 508.1.

406.8.2 Ventilation. Repair garages shall be mechanically ventilated in accordance with the *International Mechanical Code*. The *ventilation* system shall be controlled at the entrance to the garage.

406.8.3 Floor surface. Repair garage floors shall be of concrete or similar noncombustible and nonabsorbent materials.

Exception: Slip-resistant, nonabsorbent, *interior floor finishes* having a critical radiant flux not more than 0.45 W/cm^2, as determined by NFPA 253, shall be permitted.

406.8.4 Heating equipment. Heating equipment shall be installed in accordance with the *International Mechanical Code*.

[F] 406.8.5 Gas detection system. Repair garages used for the repair of vehicles fueled by nonodorized gases such as hydrogen and nonodorized LNG, shall be provided with a flammable gas detection system.

[F] 406.8.5.1 System design. The flammable gas detection system shall be *listed* or *approved* and shall be calibrated to the types of fuels or gases used by vehicles to be repaired. The gas detection system shall be designed to activate when the level of flammable gas exceeds 25 percent of the lower flammable limit (LFL). Gas detection shall be provided in lubrication or chassis service pits of repair garages used for repairing nonodorized LNG-fueled vehicles.

[F] 406.8.5.1.1 Gas detection system components. Gas detection system control units shall be *listed* and *labeled* in accordance with UL 864 or UL 2017. Gas detectors shall be *listed* and *labeled* in accordance with UL 2075 for use with the gases and vapors being detected.

[F] 406.8.5.2 Operation. Activation of the gas detection system shall result in all of the following:

1. Initiation of distinct audible and visual alarm signals in the repair garage.
2. Deactivation of all heating systems located in the repair garage.
3. Activation of the mechanical *ventilation* system, where the system is interlocked with gas detection.

[F] 406.8.5.3 Failure of the gas detection system. Failure of the gas detection system shall result in the deactivation of the heating system, activation of the mechanical *ventilation* system where the system is interlocked with the gas detection system and cause a trouble signal to sound in an *approved* location.

[F] 406.8.6 Automatic sprinkler system. A repair garage shall be equipped with an *automatic sprinkler system* in accordance with Section 903.2.9.1.

SECTION 407
GROUP I-2

407.1 General. Occupancies in Group I-2 shall comply with the provisions of Sections 407.1 through 407.10 and other applicable provisions of this code.

407.2 Corridors continuity and separation. *Corridors* in occupancies in Group I-2 shall be continuous to the *exits* and shall be separated from other areas in accordance with Section 407.3 except spaces conforming to Sections 407.2.1 through 407.2.4.

407.2.1 Waiting and similar areas. Waiting areas and similar spaces constructed as required for *corridors* shall be permitted to be open to a *corridor*, only where all of the following criteria are met:

1. The spaces are not occupied as care recipient's sleeping rooms, treatment rooms, incidental uses in accordance with Section 509, or hazardous uses.
2. The open space is protected by an automatic fire detection system installed in accordance with Section 907.
3. The *corridors* onto which the spaces open, in the same *smoke compartment*, are protected by an automatic fire detection system installed in accordance with Section 907, or the *smoke compartment* in which the spaces are located is equipped throughout with quick-response sprinklers in accordance with Section 903.3.2.
4. The space is arranged so as not to obstruct access to the required *exits*.

407.2.2 Care providers' stations. Spaces for care providers', supervisory staff, doctors' and nurses' charting, communications and related clerical areas shall be permitted to be open to the *corridor*, where such spaces are constructed as required for *corridors*.

407.2.3 Psychiatric treatment areas. Areas wherein psychiatric care recipients who are not capable of self-preservation are housed, or group meeting or multipurpose therapeutic spaces other than incidental uses in accordance with Section 509, under continuous supervision by facility staff, shall be permitted to be open to the *corridor*, where the following criteria are met:

1. Each area does not exceed 1,500 square feet (140 m^2).
2. The area is located to permit supervision by the facility staff.
3. The area is arranged so as not to obstruct any access to the required *exits*.
4. The area is equipped with an automatic fire detection system installed in accordance with Section 907.2.
5. Not more than one such space is permitted in any one *smoke compartment*.
6. The walls and ceilings of the space are constructed as required for *corridors*.

407.2.4 Gift shops. Gift shops and associated storage that are less than 500 square feet (455 m^2) in area shall be permitted to be open to the *corridor* where such spaces are constructed as required for *corridors*.

407.2.5 Nursing home housing units. In Group I-2, Condition 1, occupancies, in areas where nursing home residents are housed, shared living spaces, group meeting or multipurpose therapeutic spaces shall be permitted to be open to the *corridor*, where all of the following criteria are met:

1. The walls and ceilings of the space are constructed as required for *corridors*.
2. The spaces are not occupied as resident sleeping rooms, treatment rooms, incidental uses in accordance with Section 509, or hazardous uses.
3. The open space is protected by an automatic fire detection system installed in accordance with Section 907.
4. The *corridors* onto which the spaces open, in the same *smoke compartment*, are protected by an automatic fire detection system installed in accordance with Section 907, or the *smoke compartment* in which the spaces are located is equipped throughout with quick-response sprinklers in accordance with Section 903.3.2.
5. The space is arranged so as not to obstruct access to the required *exits*.

407.2.6 Nursing home cooking facilities. In Group I-2, Condition 1, occupancies, rooms or spaces that contain a cooking facility with domestic cooking appliances shall be permitted to be open to the corridor where all of the following criteria are met:

1. The number of care recipients housed in the smoke compartment is not greater than 30.
2. The number of care recipients served by the cooking facility is not greater than 30.
3. Only one cooking facility area is permitted in a smoke compartment.
4. The types of domestic cooking appliances permitted are limited to ovens, cooktops, ranges, warmers and microwaves.
5. The corridor is a clearly identified space delineated by construction or floor pattern, material or color.
6. The space containing the domestic cooking facility shall be arranged so as not to obstruct access to the required exit.
7. A domestic cooking hood installed and constructed in accordance with Section 505 of the

International Mechanical Code is provided over the cooktop or range.

8. The domestic cooking hood provided over the cooktop or range shall be equipped with an automatic fire-extinguishing system of a type recognized for protection of domestic cooking equipment. Preengineered automatic extinguishing systems shall be tested in accordance with UL 300A and *listed* and *labeled* for the intended application. The system shall be installed in accordance with this code, its listing and the manufacturer's instructions.
9. A manual actuation device for the hood suppression system shall be installed in accordance with Sections 904.12.1 and 904.12.2.
10. An interlock device shall be provided such that upon activation of the hood suppression system, the power or fuel supply to the cooktop or range will be turned off.
11. A shut-off for the fuel and electrical power supply to the cooking equipment shall be provided in a location that is accessible only to staff.
12. A timer shall be provided that automatically deactivates the cooking appliances within a period of not more than 120 minutes.
13. A portable fire extinguisher shall be installed in accordance with Section 906 of the *International Fire Code*.

407.3 Corridor wall construction. *Corridor* walls shall be constructed as smoke partitions in accordance with Section 710.

407.3.1 Corridor doors. *Corridor* doors, other than those in a wall required to be rated by Section 509.4 or for the enclosure of a vertical opening or an *exit*, shall not have a required *fire protection rating* and shall not be required to be equipped with *self-closing* or automatic-closing devices, but shall provide an effective barrier to limit the transfer of smoke and shall be equipped with positive latching. Roller latches are not permitted. Other doors shall conform to Section 716.5.

407.4 Means of egress. Group I-2 occupancies shall be provided with means of egress complying with Chapter 10 and Sections 407.4.1 through 407.4.4. The fire safety and evacuation plans provided in accordance with Section 1001.4 shall identify the building components necessary to support a *defend-in-place* emergency response in accordance with Sections 404 and 408 of the *International Fire Code*.

407.4.1 Direct access to a corridor. Habitable rooms in Group I-2 occupancies shall have an *exit access* door leading directly to a *corridor*.

Exceptions:

1. Rooms with *exit* doors opening directly to the outside at ground level.
2. Rooms arranged as *care suites* complying with Section 407.4.3

407.4.1.1 Locking devices. Locking devices that restrict access to a care recipient's room from the *corridor* and that are operable only by staff from the *corridor* side shall not restrict the *means of egress* from the care recipient's room.

Exceptions:

1. This section shall not apply to rooms in psychiatric treatment and similar care areas.
2. Locking arrangements in accordance with Section 1010.1.9.6.

407.4.2 Distance of travel. The distance of travel between any point in a Group I-2 occupancy sleeping room, not located in a *care suite*, and an *exit access* door in that room shall be not greater than 50 feet (15 240 mm).

407.4.3 Projections in nursing home corridors. In Group I-2, Condition 1, occupancies, where the corridor width is a minimum of 96 inches (2440 mm), projections shall be permitted for furniture where all of the following criteria are met:

1. The furniture is attached to the floor or to the wall.
2. The furniture does not reduce the clear width of the corridor to less than 72 inches (1830 mm) except where other encroachments are permitted in accordance with Section 1005.7.
3. The furniture is positioned on only one side of the *corridor*.
4. Each arrangement of furniture is 50 square feet (4.6 m^2) maximum in area.
5. Furniture arrangements are separated by 10 feet (3048 mm) minimum.
6. Placement of furniture is considered as part of the fire and safety plans in accordance with Section 1001.4.

407.4.4 Group I-2 care suites. *Care suites* in Group I-2 shall comply with Sections 407.4.4.1 through 407.4.4.4 and either Section 407.4.4.5 or 407.4.4.6.

407.4.4.1 Exit access through care suites. *Exit* access from all other portions of a building not classified as a *care suite* shall not pass through a *care suite*. In a *care suite* required to have more than one *exit*, one *exit access* is permitted to pass through an adjacent *care suite* provided all of the other requirements of Sections 407.4 and 1016.2 are satisfied.

407.4.4.2 Separation. *Care suites* shall be separated from other portions of the building, including other care suites, by a smoke partition complying with Section 710.

407.4.4.3 Access to corridor. Movement from habitable rooms shall not require passage through more than three doors and 100 feet (30 480 mm) distance of travel within the suite.

Exception: The distance of travel shall be permitted to be increased to 125 feet (38 100 mm) where an automatic smoke detection system is provided

throughout the *care suite* and installed in accordance with NFPA 72.

407.4.4.4 Doors within care suites. Doors in care suites serving habitable rooms shall be permitted to comply with one of the following:

1. Manually operated horizontal sliding doors permitted in accordance with Exception 9 to Section 1010.1.2.
2. Power-operated doors permitted in accordance with Exception 7 to Section 1010.1.2.
3. Means of egress doors complying with Section 1010.

407.4.4.5 Care suites containing sleeping room areas. Sleeping rooms shall be permitted to be grouped into care suites where one of the following criteria is met:

1. The *care suite* is not used as an *exit access* for more than eight care recipient beds.
2. The arrangement of the *care suite* allows for direct and constant visual supervision into the sleeping rooms by care providers.
3. An automatic smoke detection system is provided in the sleeping rooms and installed in accordance with NFPA 72.

407.4.4.5.1 Area. *Care suites* containing sleeping rooms shall be not greater than 7,500 square feet (696 m^2) in area.

Exception: *Care suites* containing sleeping rooms shall be permitted to be not greater than 10,000 square feet (929 m^2) in area where an automatic smoke detection system is provided throughout the *care suite* and installed in accordance with NFPA 72.

407.4.4.5.2 Exit access. Any sleeping room, or any *care suite* that contains sleeping rooms, of more than 1,000 square feet (93 m^2) shall have no fewer than two *exit access* doors from the *care suite* located in accordance with Section 1007.

407.4.4.6 Care suites not containing sleeping rooms. Areas not containing sleeping rooms, but only treatment areas and the associated rooms, spaces or circulation space, shall be permitted to be grouped into *care suites* and shall conform to the limitations in Sections 407.4.4.6.1 and 407.4.4.6.2.

407.4.4.6.1 Area. *Care suites* of rooms, other than sleeping rooms, shall have an area not greater than 12,500 square feet (1161 m^2).

Exception: *Care suites* not containing sleeping rooms shall be permitted to be not greater than 15,000 square feet (1394 m^2) in area where an automatic smoke detection system is provided throughout the *care suite* in accordance with Section 907.

407.4.4.6.2 Exit access. *Care suites*, other than sleeping rooms, with an area of more than 2,500 square feet (232 m^2) shall have no fewer than two *exit access* doors from the *care suite* located in accordance with Section 1007.1.

407.5 Smoke barriers. *Smoke barriers* shall be provided to subdivide every *story* used by persons receiving care, treatment or sleeping and to divide other *stories* with an *occupant load* of 50 or more persons, into no fewer than two *smoke compartments*. Such stories shall be divided into *smoke compartments* with an area of not more than 22,500 square feet (2092 m^2) in Group I-2, Condition 1, and not more than 40,000 square feet (3716 m^2) in Group I-2, Condition 2, and the distance of travel from any point in a *smoke compartment* to a *smoke barrier* door shall be not greater than 200 feet (60 960 mm). The *smoke barrier* shall be in accordance with Section 709.

407.5.1 Refuge area. Refuge areas shall be provided within each *smoke compartment*. The size of the refuge area shall accommodate the occupants and care recipients from the adjoining *smoke compartment*. Where a *smoke compartment* is adjoined by two or more *smoke compartments*, the minimum area of the refuge area shall accommodate the largest *occupant load* of the adjoining compartments. The size of the refuge area shall provide the following:

1. Not less than 30 net square feet (2.8 m^2) for each care recipient confined to bed or stretcher.
2. Not less than 6 square feet (0.56 m^2) for each ambulatory care recipient not confined to bed or stretcher and for other occupants.

Areas or spaces permitted to be included in the calculation of refuge area are *corridors*, sleeping areas, treatment rooms, lounge or dining areas and other low-hazard areas.

407.5.2 Independent egress. A *means of egress* shall be provided from each *smoke compartment* created by *smoke barriers* without having to return through the smoke compartment from which *means of egress* originated.

407.5.3 Horizontal assemblies. *Horizontal assemblies* supporting *smoke barriers* required by this section shall be designed to resist the movement of smoke. Elevator lobbies shall be in accordance with Section 3006.2.

[F] 407.6 Automatic sprinkler system. *Smoke compartments* containing sleeping rooms shall be equipped throughout with an *automatic sprinkler* system in accordance with Sections 903.3.1.1 and 903.3.2.

[F] 407.7 Fire alarm system. A *fire alarm* system shall be provided in accordance with Section 907.2.6.

[F] 407.8 Automatic fire detection. *Corridors* in Group I-2, Condition 1, occupancies, long-term care facilities, *detoxification facilities* and spaces permitted to be open to the *corridors* by Section 407.2 shall be equipped with an automatic fire detection system.

Group I-2, Condition 2, occupancies shall be equipped with smoke detection as required in Section 407.2.

Exceptions:

1. *Corridor* smoke detection is not required where sleeping rooms are provided with *smoke detectors*

that comply with UL 268. Such detectors shall provide a visual display on the *corridor* side of each sleeping room and an audible and visual alarm at the care provider's station attending each unit.

2. *Corridor* smoke detection is not required where sleeping room doors are equipped with automatic door-closing devices with integral *smoke detectors* on the unit sides installed in accordance with their listing, provided that the integral detectors perform the required alerting function.

407.9 Secured yards. Grounds are permitted to be fenced and gates therein are permitted to be equipped with locks, provided that safe dispersal areas having 30 net square feet (2.8 m^2) for bed and stretcher care recipients and 6 net square feet (0.56 m^2) for ambulatory care recipients and other occupants are located between the building and the fence. Such provided safe dispersal areas shall be located not less than 50 feet (15 240 mm) from the building they serve.

* **407.10 Electrical systems.** In Group I-2 occupancies, the essential electrical system for electrical components, equipment and systems shall be designed and constructed in accordance with the provisions of Chapter 27 and NFPA 99.

SECTION 408
GROUP I-3

408.1 General. Occupancies in Group I-3 shall comply with the provisions of Sections 408.1 through 408.11 and other applicable provisions of this code (see Section 308.5).

408.1.1 Definitions. The following terms are defined in Chapter 2:

CELL.

CELL TIER.

HOUSING UNIT.

SALLYPORT.

408.2 Other occupancies. Buildings or portions of buildings in Group I-3 occupancies where security operations necessitate the locking of required *means of egress* shall be permitted to be classified as a different occupancy. Occupancies classified as other than Group I-3 shall meet the applicable requirements of this code for that occupancy where provisions are made for the release of occupants at all times.

Means of egress from detention and correctional occupancies that traverse other use areas shall, as a minimum, conform to requirements for detention and correctional occupancies.

Exception: It is permissible to exit through a *horizontal exit* into other contiguous occupancies that do not conform to detention and correctional occupancy egress provisions but that do comply with requirements set forth in the appropriate occupancy, as long as the occupancy is not a Group H use.

408.3 Means of egress. Except as modified or as provided for in this section, the *means of egress* provisions of Chapter 10 shall apply.

408.3.1 Door width. Doors to resident *sleeping units* shall have a clear width of not less than 28 inches (711 mm).

408.3.2 Sliding doors. Where doors in a *means of egress* are of the horizontal-sliding type, the force to slide the door to its fully open position shall be not greater than 50 pounds (220 N) with a perpendicular force against the door of 50 pounds (220 N).

408.3.3 Guard tower doors. A hatch or trap door not less than 16 square feet (610 m^2) in area through the floor and having dimensions of not less than 2 feet (610 mm) in any direction shall be permitted to be used as a portion of the *means of egress* from guard towers.

408.3.4 Spiral stairways. *Spiral stairways* that conform to the requirements of Section 1011.10 are permitted for access to and between staff locations.

408.3.5 Ship ladders. Ship ladders shall be permitted for egress from control rooms or elevated facility observation rooms in accordance with Section 1011.15.

408.3.6 Exit discharge. *Exits* are permitted to discharge into a fenced or walled courtyard. Enclosed *yards* or *courts* shall be of a size to accommodate all occupants, be located not less than 50 feet (15 240 mm) from the building and have an area of not less than 15 square feet (1.4 m^2) per person.

408.3.7 Sallyports. A *sallyport* shall be permitted in a *means of egress* where there are provisions for continuous and unobstructed passage through the *sallyport* during an emergency egress condition.

408.3.8 Interior exit stairway and ramp construction. One *interior exit stairway* or *ramp* in each building shall be permitted to have glazing installed in doors and interior walls at each landing level providing access to the *interior exit stairway or ramp*, provided that the following conditions are met:

1. The *interior exit stairway or ramp* shall not serve more than four floor levels.
2. *Exit* doors shall be not less than $^3/_4$-hour *fire door assemblies* complying with Section 716.5
3. The total area of glazing at each floor level shall not exceed 5,000 square inches (3.2 m^2) and individual panels of glazing shall not exceed 1,296 square inches (0.84 m^2).
4. The glazing shall be protected on both sides by an *automatic sprinkler system*. The sprinkler system shall be designed to wet completely the entire surface of any glazing affected by fire when actuated.
5. The glazing shall be in a gasketed frame and installed in such a manner that the framing system will deflect without breaking (loading) the glass before the sprinkler system operates.
6. Obstructions, such as curtain rods, drapery traverse rods, curtains, drapes or similar materials shall not be installed between the automatic sprinklers and the glazing.

408.4 Locks. Egress doors are permitted to be locked in accordance with the applicable use condition. Doors from a refuge area to the outside are permitted to be locked with a key in lieu of locking methods described in Section 408.4.1. The keys to unlock the exterior doors shall be available at all times and the locks shall be operable from both sides of the door.

408.4.1 Remote release. Remote release of locks on doors in a *means of egress* shall be provided with reliable means of operation, remote from the resident living areas, to release locks on all required doors. In Occupancy Condition 3 or 4, the arrangement, accessibility and security of the release mechanisms required for egress shall be such that with the minimum available staff at any time, the lock mechanisms are capable of being released within 2 minutes.

Exception: Provisions for remote locking and unlocking of occupied rooms in Occupancy Condition 4 are not required provided that not more than 10 locks are necessary to be unlocked in order to move occupants from one smoke compartment to a refuge area within 3 minutes. The opening of necessary locks shall be accomplished with not more than two separate keys.

[F] 408.4.2 Power-operated doors and locks. Power-operated sliding doors or power-operated locks for swinging doors shall be operable by a manual release mechanism at the door. Emergency power shall be provided for the doors and locks in accordance with Section 2702.

Exceptions:

1. Emergency power is not required in facilities with 10 or fewer locks complying with the exception to Section 408.4.1.
2. Emergency power is not required where remote mechanical operating releases are provided.

408.4.3 Redundant operation. Remote release, mechanically operated sliding doors or remote release, mechanically operated locks shall be provided with a mechanically operated release mechanism at each door, or shall be provided with a redundant remote release control.

408.4.4 Relock capability. Doors remotely unlocked under emergency conditions shall not automatically relock when closed unless specific action is taken at the remote location to enable doors to relock.

408.5 Protection of vertical openings. Any vertical opening shall be protected by a *shaft enclosure* in accordance with Section 713, or shall be in accordance with Section 408.5.1.

408.5.1 Floor openings. Openings in floors within a *housing unit* are permitted without a *shaft enclosure*, provided all of the following conditions are met:

1. The entire normally occupied areas so interconnected are open and unobstructed so as to enable observation of the areas by supervisory personnel;
2. *Means of egress* capacity is sufficient for all occupants from all interconnected *cell tiers* and areas;
3. The height difference between the floor levels of the highest and lowest *cell tiers* shall not exceed 23 feet (7010 mm); and
4. Egress from any portion of the *cell tier* to an *exit* or *exit access* door shall not require travel on more than one additional floor level within the *housing unit*.

408.5.2 Shaft openings in communicating floor levels. Where a floor opening is permitted between communicating floor levels of a *housing unit* in accordance with Section 408.5.1, plumbing chases serving vertically staked individual *cells* contained with the *housing unit* shall be permitted without a *shaft enclosure*.

408.6 Smoke barrier. Occupancies in Group I-3 shall have *smoke barriers* complying with Sections 408.7 and 709 to divide every *story* occupied by residents for sleeping, or any other *story* having an *occupant load* of 50 or more persons, into no fewer than two *smoke compartments*.

Exception: Spaces having a direct *exit* to one of the following, provided that the locking arrangement of the doors involved complies with the requirements for doors at the *smoke barrier* for the use condition involved:

1. A *public way*.
2. A building separated from the resident housing area by a 2-hour fire-resistance-rated assembly or 50 feet (15 240 mm) of open space.
3. A secured *yard* or *court* having a holding space 50 feet (15 240 mm) from the housing area that provides 6 square feet (0.56 m^2) or more of refuge area per occupant, including residents, staff and visitors.

408.6.1 Smoke compartments. The number of residents in any *smoke compartment* shall be not more than 200. The distance of travel to a door in a *smoke barrier* from any room door required as exit access shall be not greater than 150 feet (45 720 mm). The distance of travel to a door in a *smoke barrier* from any point in a room shall be not greater than 200 feet (60 960 mm).

408.6.2 Refuge area. Not less than 6 net square feet (0.56 m^2) per occupant shall be provided on each side of each *smoke barrier* for the total number of occupants in adjoining *smoke compartments*. This space shall be readily available wherever the occupants are moved across the *smoke barrier* in a fire emergency.

408.6.3 Independent egress. A *means of egress* shall be provided from each *smoke compartment* created by *smoke barriers* without having to return through the *smoke compartment* from which *means of egress* originates.

408.7 Security glazing. In occupancies in Group I-3, windows and doors in 1-hour *fire barriers* constructed in accordance with Section 707, *fire partitions* constructed in accordance with Section 708 and *smoke barriers* constructed in accordance with Section 709 shall be permitted to have security glazing installed provided that the following conditions are met.

1. Individual panels of glazing shall not exceed 1,296 square inches (0.84 m^2).

2. The glazing shall be protected on both sides by an *automatic sprinkler system.* The sprinkler system shall be designed to, when actuated, wet completely the entire surface of any glazing affected by fire.
3. The glazing shall be in a gasketed frame and installed in such a manner that the framing system will deflect without breaking (loading) the glass before the sprinkler system operates.
4. Obstructions, such as curtain rods, drapery traverse rods, curtains, drapes or similar materials shall not be installed between the automatic sprinklers and the glazing.

408.8 Subdivision of resident housing areas. Sleeping areas and any contiguous day room, group activity space or other common spaces where residents are housed shall be separated from other spaces in accordance with Sections 408.8.1 through 408.8.4.

408.8.1 Occupancy Conditions 3 and 4. Each sleeping area in Occupancy Conditions 3 and 4 shall be separated from the adjacent common spaces by a smoke-tight partition where the distance of travel from the sleeping area through the common space to the *corridor* exceeds 50 feet (15 240 mm).

408.8.2 Occupancy Condition 5. Each sleeping area in Occupancy Condition 5 shall be separated from adjacent sleeping areas, *corridors* and common spaces by a smoke-tight partition. Additionally, common spaces shall be separated from the *corridor* by a smoke-tight partition.

408.8.3 Openings in room face. The aggregate area of openings in a solid sleeping room face in Occupancy Conditions 2, 3, 4 and 5 shall not exceed 120 square inches (0.77 m^2). The aggregate area shall include all openings including door undercuts, food passes and grilles. Openings shall be not more than 36 inches (914 mm) above the floor. In Occupancy Condition 5, the openings shall be closeable from the room side.

408.8.4 Smoke-tight doors. Doors in openings in partitions required to be smoke tight by Section 408.8 shall be substantial doors, of construction that will resist the passage of smoke. Latches and door closures are not required on *cell* doors.

408.9 Windowless buildings. For the purposes of this section, a windowless building or portion of a building is one with nonopenable windows, windows not readily breakable or without windows. Windowless buildings shall be provided with an engineered smoke control system to provide a tenable environment for exiting from the *smoke compartment* in the area of fire origin in accordance with Section 909 for each windowless *smoke compartment.*

[F] 408.10 Fire alarm system. A *fire alarm* system shall be provided in accordance with Section 907.2.6.3.

[F] 408.11 Automatic sprinkler system. Group I-3 occupancies shall be equipped throughout with an *automatic sprinkler system* in accordance with Section 903.2.6.

SECTION 409
MOTION PICTURE PROJECTION ROOMS

409.1 General. The provisions of Sections 409.1 through 409.5 shall apply to rooms in which ribbon-type cellulose acetate or other safety film is utilized in conjunction with electric arc, xenon or other light-source projection equipment that develops hazardous gases, dust or radiation. Where cellulose nitrate film is utilized or stored, such rooms shall comply with NFPA 40.

409.1.1 Projection room required. Every motion picture machine projecting film as mentioned within the scope of this section shall be enclosed in a projection room. Appurtenant electrical equipment, such as rheostats, transformers and generators, shall be within the projection room or in an adjacent room of equivalent construction.

409.2 Construction of projection rooms. Every projection room shall be of permanent construction consistent with the construction requirements for the type of building in which the projection room is located. Openings are not required to be protected.

The room shall have a floor area of not less than 80 square feet (7.44 m^2) for a single machine and not less than 40 square feet (3.7 m^2) for each additional machine. Each motion picture projector, floodlight, spotlight or similar piece of equipment shall have a clear working space of not less than 30 inches by 30 inches (762 mm by 762 mm) on each side and at the rear thereof, but only one such space shall be required between two adjacent projectors. The projection room and the rooms appurtenant thereto shall have a ceiling height of not less than 7 feet 6 inches (2286 mm). The aggregate of openings for projection equipment shall not exceed 25 percent of the area of the wall between the projection room and the auditorium. Openings shall be provided with glass or other *approved* material, so as to close completely the opening.

409.3 Projection room and equipment ventilation. *Ventilation* shall be provided in accordance with the *International Mechanical Code.*

409.3.1 Supply air. Each projection room shall be provided with adequate air supply inlets so arranged as to provide well-distributed air throughout the room. Air inlet ducts shall provide an amount of air equivalent to the amount of air being exhausted by projection equipment. Air is permitted to be taken from the outside; from adjacent spaces within the building, provided the volume and infiltration rate is sufficient; or from the building air-conditioning system, provided it is so arranged as to provide sufficient air when other systems are not in operation.

409.3.2 Exhaust air. Projection rooms are permitted to be exhausted through the lamp exhaust system. The lamp exhaust system shall be positively interconnected with the lamp so that the lamp will not operate unless there is the required airflow. Exhaust air ducts shall terminate at the exterior of the building in such a location that the exhaust air cannot be readily recirculated into any air supply sys-

tem. The projection room *ventilation* system is permitted to also serve appurtenant rooms, such as the generator and rewind rooms.

409.3.3 Projection machines. Each projection machine shall be provided with an exhaust duct that will draw air from each lamp and exhaust it directly to the outside of the building. The lamp exhaust is permitted to serve to exhaust air from the projection room to provide room air circulation. Such ducts shall be of rigid materials, except for a flexible connector *approved* for the purpose. The projection lamp or projection room exhaust system, or both, is permitted to be combined but shall not be interconnected with any other exhaust or return system, or both, within the building.

409.4 Lighting control. Provisions shall be made for control of the auditorium lighting and the *means of egress* lighting systems of theaters from inside the projection room and from not less than one other convenient point in the building.

409.5 Miscellaneous equipment. Each projection room shall be provided with rewind and film storage facilities.

SECTION 410
STAGES, PLATFORMS AND TECHNICAL PRODUCTION AREAS

410.1 Applicability. The provisions of Sections 410.1 through 410.8 shall apply to all parts of buildings and structures that contain *stages* or *platforms* and similar appurtenances as herein defined.

410.2 Definitions. The following terms are defined in Chapter 2:

PLATFORM.

PROSCENIUM WALL.

STAGE.

TECHNICAL PRODUCTION AREA.

410.3 Stages. *Stage* construction shall comply with Sections 410.3.1 through 410.3.7.

410.3.1 Stage construction. *Stages* shall be constructed of materials as required for floors for the type of construction of the building in which such *stages* are located.

Exception: *Stages* need not be constructed of the same materials as required for the type of construction provided the construction complies with one of the following:

1. *Stages* of Type IIB or IV construction with a nominal 2-inch (51 mm) wood deck, provided that the *stage* is separated from other areas in accordance with Section 410.3.4.
2. In buildings of Type IIA, IIIA and VA construction, a fire-resistance-rated floor is not required, provided the space below the *stage* is equipped with an *automatic sprinkler system or fire-extinguishing system* in accordance with Section 903 or 904.
3. In all types of construction, the finished floor shall be constructed of wood or *approved* noncombustible materials. Openings through *stage* floors shall be equipped with tight-fitting, solid wood trap doors with *approved* safety locks.

410.3.1.1 Stage height and area. *Stage* areas shall be measured to include the entire performance area and adjacent backstage and support areas not separated from the performance area by fire-resistance-rated construction. *Stage* height shall be measured from the lowest point on the *stage* floor to the highest point of the roof or floor deck above the *stage*.

410.3.2 Technical production areas: galleries, gridirons and catwalks. Beams designed only for the attachment of portable or fixed theater equipment, gridirons, galleries and catwalks shall be constructed of *approved* materials consistent with the requirements for the type of construction of the building; and a *fire-resistance rating* shall not be required. These areas shall not be considered to be floors, *stories*, *mezzanines* or levels in applying this code.

Exception: Floors of fly galleries and catwalks shall be constructed of any *approved* material.

410.3.3 Exterior stage doors. Where protection of openings is required, exterior *exit* doors shall be protected with *fire door assemblies* that comply with Section 716. Exterior openings that are located on the *stage* for *means of egress* or loading and unloading purposes, and that are likely to be open during occupancy of the theater, shall be constructed with vestibules to prevent air drafts into the auditorium.

410.3.4 Proscenium wall. Where the *stage* height is greater than 50 feet (15 240 mm), all portions of the *stage* shall be completely separated from the seating area by a proscenium wall with not less than a 2-hour *fire-resistance rating* extending continuously from the foundation to the roof.

410.3.5 Proscenium curtain. Where a proscenium wall is required to have a *fire-resistance rating*, the *stage* opening shall be provided with a fire curtain complying with NFPA 80, horizontal sliding doors complying with Section 716.5.2 having a fire protection rating of at least 1 hour, or an *approved* water curtain complying with Section 903.3.1.1 or, in facilities not utilizing the provisions of smoke-protected assembly seating in accordance with Section 1029.6.2, a smoke control system complying with Section 909 or natural *ventilation* designed to maintain the smoke level not less than 6 feet (1829 mm) above the floor of the *means of egress*.

410.3.6 Scenery. Combustible materials used in sets and scenery shall meet the fire propagation performance criteria of Test Method 1 or Test Method 2, as appropriate, of NFPA 701, in accordance with Section 806 and the *International Fire Code*. Foam plastics and materials containing foam plastics shall comply with Section 2603 and the *International Fire Code*.

410.3.7 Stage ventilation. Emergency *ventilation* shall be provided for *stages* larger than 1,000 square feet (93 m^2) in floor area, or with a *stage* height greater than 50 feet (15 240 mm). Such *ventilation* shall comply with Section 410.3.7.1 or 410.3.7.2.

410.3.7.1 Roof vents. Two or more vents constructed to open automatically by *approved* heat-activated devices and with an aggregate clear opening area of not less than 5 percent of the area of the *stage* shall be located near the center and above the highest part of the *stage* area. Supplemental means shall be provided for manual operation of the ventilator. Curbs shall be provided as required for skylights in Section 2610.2. Vents shall be *labeled*.

[F] 410.3.7.2 Smoke control. Smoke control in accordance with Section 909 shall be provided to maintain the smoke layer interface not less than 6 feet (1829 mm) above the highest level of the assembly seating or above the top of the proscenium opening where a proscenium wall is provided in compliance with Section 410.3.4.

410.4 Platform construction. Permanent *platforms* shall be constructed of materials as required for the type of construction of the building in which the permanent *platform* is located. Permanent *platforms* are permitted to be constructed of *fire-retardant-treated wood* for Types I, II and IV construction where the *platforms* are not more than 30 inches (762 mm) above the main floor, and not more than one-third of the room floor area and not more than 3,000 square feet (279 m^2) in area. Where the space beneath the permanent *platform* is used for storage or any purpose other than equipment, wiring or plumbing, the floor assembly shall be not less than 1-hour fire-resistance-rated construction. Where the space beneath the permanent *platform* is used only for equipment, wiring or plumbing, the underside of the permanent *platform* need not be protected.

410.4.1 Temporary platforms. *Platforms* installed for a period of not more than 30 days are permitted to be constructed of any materials permitted by this code. The space between the floor and the *platform* above shall only be used for plumbing and electrical wiring to *platform* equipment.

410.5 Dressing and appurtenant rooms. Dressing and appurtenant rooms shall comply with Sections 410.5.1 and 410.5.2.

410.5.1 Separation from stage. The *stage* shall be separated from dressing rooms, scene docks, property rooms, workshops, storerooms and compartments appurtenant to the *stage* and other parts of the building by *fire barriers* constructed in accordance with Section 707 or *horizontal assemblies* constructed in accordance with Section 711, or both. The *fire-resistance rating* shall be not less than 2 hours for *stage* heights greater than 50 feet (15 240 mm) and not less than 1 hour for *stage* heights of 50 feet (15 240 mm) or less.

410.5.2 Separation from each other. Dressing rooms, scene docks, property rooms, workshops, storerooms and compartments appurtenant to the *stage* shall be separated from each other by not less than 1-hour *fire barriers* constructed in accordance with Section 707 or *horizontal assemblies* constructed in accordance with Section 711, or both.

410.6 Means of egress. Except as modified or as provided for in this section, the provisions of Chapter 10 shall apply.

410.6.1 Arrangement. Where two or more *exits* or *exit access doorways* from the *stage* are required in accordance with Section 1006.2, no fewer than one *exit* or *exit access doorway* shall be provided on each side of a *stage*.

410.6.2 Stairway and ramp enclosure. *Exit access stairways* and *ramps* serving a *stage* or *platform* are not required to be enclosed. *Exit access stairways* and ramps serving *technical production areas* are not required to be enclosed.

410.6.3 Technical production areas. *Technical production areas* shall be provided with means of egress and means of escape in accordance with Sections 410.6.3.1 through 410.6.3.5.

410.6.3.1 Number of means of egress. No fewer than one *means of egress* shall be provided from *technical production areas*.

410.6.3.2 Exit access travel distance. The *exit access* travel distance shall be not greater than 300 feet (91 440 mm) for buildings without a sprinkler system and 400 feet (121 900 mm) for buildings equipped throughout with an *automatic sprinkler system* in accordance with Section 903.3.1.1.

410.6.3.3 Two means of egress. Where two *means of egress* are required, the *common path of travel* shall be not greater than 100 feet (30 480 mm).

Exception: A means of escape to a roof in place of a second *means of egress* is permitted.

410.6.3.4 Path of egress travel. The following *exit access* components are permitted where serving *technical production areas:*

1. *Stairways.*
2. *Ramps.*
3. *Spiral stairways.*
4. Catwalks.
5. *Alternating tread devices.*
6. Permanent ladders.

410.6.3.5 Width. The path of egress travel within and from technical support areas shall be not less than 22 inches (559 mm).

[F] 410.7 Automatic sprinkler system. *Stages* shall be equipped with an *automatic sprinkler system* in accordance with Section 903.3.1.1. Sprinklers shall be installed under

the roof and gridiron and under all catwalks and galleries over the *stage*. Sprinklers shall be installed in dressing rooms, performer lounges, shops and storerooms accessory to such *stages*.

Exceptions:

1. Sprinklers are not required under *stage* areas less than 4 feet (1219 mm) in clear height that are utilized exclusively for storage of tables and chairs, provided the concealed space is separated from the adjacent spaces by Type X gypsum board not less than $^5/_8$-inch (15.9 mm) in thickness.
2. Sprinklers are not required for *stages* 1,000 square feet (93 m^2) or less in area and 50 feet (15 240 mm) or less in height where curtains, scenery or other combustible hangings are not retractable vertically. Combustible hangings shall be limited to a single main curtain, borders, legs and a single backdrop.
3. Sprinklers are not required within portable orchestra enclosures on *stages*.

[F] 410.8 Standpipes. Standpipe systems shall be provided in accordance with Section 905.

SECTION 411
SPECIAL AMUSEMENT BUILDINGS

411.1 General. *Special amusement buildings* having an *occupant load* of 50 or more shall comply with the requirements for the appropriate Group A occupancy and Sections 411.1 through 411.8. *Special amusement buildings* having an *occupant load* of less than 50 shall comply with the requirements for a Group B occupancy and Sections 411.1 through 411.8.

Exception: *Special amusement buildings* or portions thereof that are without walls or a roof and constructed to prevent the accumulation of smoke need not comply with this section.

For flammable *decorative materials*, see the *International Fire Code*.

411.2 Definition. The following term is defined in Chapter 2:

SPECIAL AMUSEMENT BUILDING.

[F] 411.3 Automatic fire detection. *Special amusement buildings* shall be equipped with an automatic fire detection system in accordance with Section 907.

[F] 411.4 Automatic sprinkler system. *Special amusement buildings* shall be equipped throughout with an *automatic sprinkler system* in accordance with Section 903.3.1.1. Where the *special amusement building* is temporary, the sprinkler water supply shall be of an *approved* temporary means.

Exception: Automatic sprinklers are not required where the total floor area of a temporary *special amusement building* is less than 1,000 square feet (93 m^2) and the exit access travel distance from any point to an exit is less than 50 feet (15 240 mm).

[F] 411.5 Alarm. Actuation of a single *smoke detector*, the *automatic sprinkler system* or other automatic fire detection device shall immediately sound an alarm at the building at a *constantly attended location* from which emergency action can be initiated including the capability of manual initiation of requirements in Section 907.2.12.2.

[F] 411.6 Emergency voice/alarm communications system. An *emergency voice/alarm communications system* shall be provided in accordance with Sections 907.2.12 and 907.5.2.2, which is also permitted to serve as a public address system and shall be audible throughout the entire *special amusement building*.

411.7 Exit marking. Exit signs shall be installed at the required *exit* or *exit access doorways* of amusement buildings in accordance with this section and Section 1013. *Approved* directional exit markings shall also be provided. Where mirrors, mazes or other designs are utilized that disguise the path of egress travel such that they are not apparent, *approved* and *listed* low-level exit signs that comply with Section 1013.5, and directional path markings *listed* in accordance with UL 1994, shall be provided and located not more than 8 inches (203 mm) above the walking surface and on or near the path of egress travel. Such markings shall become visible in an emergency. The directional exit marking shall be activated by the automatic fire detection system and the *automatic sprinkler system* in accordance with Section 907.2.12.2.

411.7.1 Photoluminescent exit signs. Where *photoluminescent exit* signs are installed, activating light source and viewing distance shall be in accordance with the listing and markings of the signs.

411.8 Interior finish. The *interior finish* shall be Class A in accordance with Section 803.1.

SECTION 412
AIRCRAFT-RELATED OCCUPANCIES

412.1 General. Aircraft-related occupancies shall comply with Sections 412.1 through 412.8 and the *International Fire Code*.

412.2 Definitions. The following terms are defined in Chapter 2:

FIXED BASE OPERATOR (FBO).

HELIPORT.

HELISTOP.

RESIDENTIAL AIRCRAFT HANGAR.

TRANSIENT AIRCRAFT.

412.3 Airport traffic control towers. The provisions of Sections 412.3.1 through 412.3.8 shall apply to airport traffic control towers occupied only for the following uses:

1. Airport traffic control cab.
2. Electrical and mechanical equipment rooms.
3. Airport terminal radar and electronics rooms.
4. Office spaces incidental to the tower operation.
5. Lounges for employees, including sanitary facilities.

412.3.1 Type of construction. Airport traffic control towers shall be constructed to comply with the height limitations of Table 412.3.1.

TABLE 412.3.1
HEIGHT LIMITATIONS FOR AIRPORT TRAFFIC CONTROL TOWERS

TYPE OF CONSTRUCTION	HEIGHT[a] (feet)
IA	Unlimited
IB	240
IIA	100
IIB	85
IIIA	65

For SI: 1 foot = 304.8 mm, 1 square foot = 0.0929 m^2.
a. Height to be measured from grade plane to cab floor.

412.3.2 Stairways. Stairways in airport traffic control towers shall be in accordance with Section 1011. Stairways shall be smokeproof enclosures complying with one of the alternatives provided in Section 909.20.

Exception: Stairways in airport traffic control towers are not required to comply with Section 1011.12.

412.3.3 Exit access. From observation levels, airport traffic control towers shall be permitted to have a single means of exit access for a distance of travel not greater than 100 feet (30 480 mm). Exit access stairways from the observation level need not be enclosed.

412.3.4 Number of exits. Not less than one *exit stairway* shall be permitted for airport traffic control towers of any height provided that the *occupant load* per floor is not greater than 15 and the area per floor does not exceed 1,500 square feet (140 m^2).

412.3.4.1 Interior finish. Where an airport traffic control tower is provided with only one exit stairway, interior wall and ceiling finishes shall be either Class A or Class B.

[F] 412.3.5 Automatic fire detection systems. Airport traffic control towers shall be provided with an automatic fire detection system installed in accordance with Section 907.2.

412.3.6 Automatic sprinkler system. Where an occupied floor is located more than 35 feet (10 668 mm) above the lowest level of fire department vehicle access, airport traffic control towers shall be equipped with an *automatic sprinkler system* in accordance with Section 903.3.1.1.

412.3.7 Elevator protection. Wires or cables that provide normal or standby power, control signals, communication with the car, lighting, heating, air conditioning, *ventilation* and fire detecting systems to elevators shall be protected by construction having a *fire-resistance rating* of not less than 1 hour, or shall be circuit integrity cable having a fire-resistance rating of not less than 1 hour.

412.3.7.1 Elevators for occupant evacuation. Where provided in addition to an exit stairway, occupant evacuation elevators shall be in accordance with Section 3008.

412.3.8 Accessibility. Airport traffic control towers need not be *accessible* as specified in the provisions of Chapter 11.

412.4 Aircraft hangars. Aircraft hangars shall be in accordance with Sections 412.4.1 through 412.4.6.

412.4.1 Exterior walls. *Exterior walls* located less than 30 feet (9144 mm) from *lot lines* or a *public way* shall have a *fire-resistance rating* not less than 2 hours.

412.4.2 Basements. Where hangars have *basements,* floors over *basements* shall be of Type IA construction and shall be made tight against seepage of water, oil or vapors. There shall be no opening or communication between *basements* and the hangar. Access to *basements* shall be from outside only.

412.4.3 Floor surface. Floors shall be graded and drained to prevent water or fuel from remaining on the floor. Floor drains shall discharge through an oil separator to the sewer or to an outside vented sump.

Exception: Aircraft hangars with individual lease spaces not exceeding 2,000 square feet (186 m^2) each in which servicing, repairing or washing is not conducted and fuel is not dispensed shall have floors that are graded toward the door, but shall not require a separator.

412.4.4 Heating equipment. Heating equipment shall be placed in another room separated by 2-hour *fire barriers* constructed in accordance with Section 707 or *horizontal assemblies* constructed in accordance with Section 711, or both. Entrance shall be from the outside or by means of a vestibule providing a two-doorway separation.

Exceptions:

1. Unit heaters and vented infrared radiant heating equipment suspended not less than 10 feet (3048 mm) above the upper surface of wings or engine enclosures of the highest aircraft that are permitted to be housed in the hangar need not be located in a separate room provided they are mounted not less than 8 feet (2438 mm) above the floor in shops, offices and other sections of the hangar communicating with storage or service areas.
2. Entrance to the separated room shall be permitted by a single interior door provided the sources of ignition in the appliances are not less than 18 inches (457 mm) above the floor.

412.4.5 Finishing. The process of "doping," involving use of a volatile flammable solvent, or of painting, shall be carried on in a separate *detached building* equipped with *automatic fire-extinguishing equipment* in accordance with Section 903.

[F] 412.4.6 Fire suppression. Aircraft hangars shall be provided with a fire suppression system designed in accordance with NFPA 409, based upon the classification for the hangar given in Table 412.4.6.

Exception: Where a *fixed base operator* has separate repair facilities on site, Group II hangars operated by a

[F] TABLE 412.4.6
HANGAR FIRE SUPPRESSION REQUIREMENTS[a,b,c]

MAXIMUM SINGLE FIRE AREA (square feet)	TYPE OF CONSTRUCTION								
	IA	IB	IIA	IIB	IIIA	IIIB	IV	VA	VB
≥ 40,001	Group I	Group I	Group I	Group I	Group I	Group I	Group I	Group I	Group I
40,000	Group II	Group II	Group II	Group II	Group II	Group II	Group II	Group II	Group II
30,000	Group III	Group II	Group II	Group II	Group II	Group II	Group II	Group II	Group II
20,000	Group III	Group III	Group II	Group II	Group II	Group II	Group II	Group II	Group II
15,000	Group III	Group III	Group III	Group II	Group III	Group II	Group III	Group II	Group II
12,000	Group III	Group III	Group III	Group III	Group III	Group III	Group III	Group II	Group II
8,000	Group III	Group III	Group III	Group III	Group III	Group III	Group III	Group III	Group II
5,000	Group III	Group III	Group III	Group III	Group III	Group III	Group III	Group III	Group III

For SI: 1 foot = 304.8 mm, 1 square foot = 0.0929 m^2.

a. Aircraft hangars with a door height greater than 28 feet shall be provided with fire suppression for a Group I hangar regardless of maximum fire area.

b. Groups shall be as classified in accordance with NFPA 409.

c. Membrane structures complying with Section 3102 shall be classified as a Group IV hangar.

fixed base operator used for storage of *transient aircraft* only shall have a fire suppression system, but the system is exempt from foam requirements.

[F] 412.4.6.1 Hazardous operations. Any Group III aircraft hangar according to Table 412.4.6 that contains hazardous operations including, but not limited to, the following shall be provided with a Group I or II fire suppression system in accordance with NFPA 409 as applicable:

1. Doping.
2. Hot work including, but not limited to, welding, torch cutting and torch soldering.
3. Fuel transfer.
4. Fuel tank repair or maintenance not including defueled tanks in accordance with NFPA 409, inerted tanks or tanks that have never been fueled.
5. Spray finishing operations.
6. Total fuel capacity of all aircraft within the unsprinklered single *fire area* in excess of 1,600 gallons (6057 L).
7. Total fuel capacity of all aircraft within the maximum single *fire area* in excess of 7,500 gallons (28 390 L) for a hangar with an *automatic sprinkler system* in accordance with Section 903.3.1.1.

[F] 412.4.6.2 Separation of maximum single fire areas. Maximum single *fire areas* established in accordance with hangar classification and construction type in Table 412.4.6 shall be separated by 2-hour *fire walls* constructed in accordance with Section 706. In determining the maximum single *fire area* as set forth in Table 412.4.6, ancillary uses that are separated from aircraft servicing areas by a *fire barrier* of not less than 1 hour, constructed in accordance with Section 707, shall not be included in the area.

412.5 Residential aircraft hangars. *Residential aircraft hangars* shall comply with Sections 412.5.1 through 412.5.5.

412.5.1 Fire separation. A hangar shall not be attached to a *dwelling* unless separated by a *fire barrier* having a *fire-resistance rating* of not less than 1 hour. Such separation shall be continuous from the foundation to the underside of the roof and unpierced except for doors leading to the *dwelling unit*. Doors into the *dwelling unit* shall be equipped with *self-closing* devices and conform to the requirements of Section 716 with a noncombustible raised sill not less than 4 inches (102 mm) in height. Openings from a hangar directly into a room used for sleeping purposes shall not be permitted.

412.5.2 Egress. A hangar shall provide two *means of egress*. One of the doors into the dwelling shall be considered as meeting only one of the two *means of egress*.

[F] 412.5.3 Smoke alarms. *Smoke alarms* shall be provided within the hangar in accordance with Section 907.2.21.

412.5.4 Independent systems. Electrical, mechanical and plumbing drain, waste and vent (DWV) systems installed within the hangar shall be independent of the systems installed within the dwelling. Building sewer lines shall be permitted to be connected outside the structures.

Exception: *Smoke detector* wiring and feed for electrical subpanels in the hangar.

412.5.5 Height and area limits. *Residential aircraft hangars* shall be not greater than 2,000 square feet (186 m^2) in area and 20 feet (6096 mm) in *building height*.

[F] 412.6 Aircraft paint hangars. Aircraft painting operations where flammable liquids are used in excess of the maximum allowable quantities per *control area* listed in Table 307.1(1) shall be conducted in an aircraft paint hangar that complies with the provisions of Sections 412.6.1 through 412.6.6.

[F] 412.6.1 Occupancy group. Aircraft paint hangars shall be classified as Group H-2. Aircraft paint hangars shall comply with the applicable requirements of this code and the *International Fire Code* for such occupancy.

412.6.2 Construction. The aircraft paint hangar shall be of Type I or II construction.

[F] 412.6.3 Operations. Only those flammable liquids necessary for painting operations shall be permitted in quantities less than the maximum allowable quantities per *control area* in Table 307.1(1). Spray equipment cleaning operations shall be conducted in a liquid use, dispensing and mixing room.

[F] 412.6.4 Storage. Storage of flammable liquids shall be in a liquid storage room.

[F] 412.6.5 Fire suppression. Aircraft paint hangars shall be provided with fire suppression as required by NFPA 409.

[F] 412.6.6 Ventilation. Aircraft paint hangars shall be provided with *ventilation* as required in the *International Mechanical Code*.

412.7 Aircraft manufacturing facilities. In buildings used for the manufacturing of aircraft, exit access travel distances indicated in Section 1017.1 shall be increased in accordance with the following:

1. The building shall be of Type I or II construction.
2. Exit access travel distance shall not exceed the distances given in Table 412.7.

412.7.1 Ancillary areas. Rooms, areas and spaces ancillary to the primary manufacturing area shall be permitted to egress through such area having a minimum height as indicated in Table 412.7. Exit access travel distance within the ancillary room, area or space shall not exceed that indicated in Table 1017.2 based on the occupancy classification of that ancillary area. Total exit access travel distance shall not exceed that indicated in Table 412.7.

[F] 412.8 Heliports and helistops. *Heliports* and *helistops* shall be permitted to be erected on buildings or other locations where they are constructed in accordance with Sections 412.8.1 through 412.8.5.

[F] 412.8.1 Size. The landing area for helicopters less than 3,500 pounds (1588 kg) shall be not less than 20 feet (6096 mm) in length and width. The landing area shall be surrounded on all sides by a clear area having a minimum average width at roof level of 15 feet (4572 mm) but with no width less than 5 feet (1524 mm).

[F] 412.8.2 Design. Helicopter landing areas and the supports thereof on the roof of a building shall be noncombustible construction. Landing areas shall be designed to confine any flammable liquid spillage to the landing area itself and provisions shall be made to drain such spillage away from any *exit* or *stairway* serving the helicopter landing area or from a structure housing such *exit* or *stairway*. For structural design requirements, see Section 1607.6.

[F] 412.8.3 Means of egress. The *means of egress* from *heliports* and *helistops* shall comply with the provisions of Chapter 10. Landing areas located on buildings or structures shall have two or more *means of egress*. For landing areas less than 60 feet (18 288 mm) in length or less than 2,000 square feet (186 m^2) in area, the second *means of egress* is permitted to be a fire escape, *alternating tread device* or ladder leading to the floor below.

[F] 412.8.4 Rooftop heliports and helistops. Rooftop *heliports* and *helistops* shall comply with NFPA 418.

[F] 412.8.5 Standpipe system. In buildings equipped with a standpipe system, the standpipe shall extend to the roof level in accordance with Section 905.3.6.

SECTION 413
COMBUSTIBLE STORAGE

413.1 General. High-piled stock or rack storage in any occupancy group shall comply with the *International Fire Code*.

413.2 Attic, under-floor and concealed spaces. *Attic*, under-floor and concealed spaces used for storage of combustible materials shall be protected on the storage side as required for 1-hour fire-resistance-rated construction. Openings shall be protected by assemblies that are *self-closing* and are of noncombustible construction or solid wood core not less than $1^3/_4$ inch (45 mm) in thickness.

Exception: Neither fire-resistance-rated construction nor open protectives are required in any of the following locations:

1. Areas protected by *approved automatic sprinkler systems*.
2. Group R-3 and U occupancies.

TABLE 412.7
AIRCRAFT MANUFACTURING EXIT ACCESS TRAVEL DISTANCE

HEIGHT (feet) [b]	MANUFACTURING AREA (sq. ft.) [a]					
	≥ 150,000	≥ 200,000	≥ 250,000	≥ 500,000	≥ 750,000	≥ 1,000,000
≥ 25	400	450	500	500	500	500
≥ 50	400	500	600	700	700	700
≥ 75	400	500	700	850	1,000	1,000
≥ 100	400	500	750	1,000	1,250	1,500

For SI: 1 foot = 304.8 mm.

a. Contiguous floor area of the aircraft manufacturing facility having the indicated height.

b. Minimum height from finished floor to bottom of ceiling or roof slab or deck.

SECTION 414
HAZARDOUS MATERIALS

[F] 414.1 General. The provisions of Sections 414.1 through 414.6 shall apply to buildings and structures occupied for the manufacturing, processing, dispensing, use or storage of hazardous materials.

[F] 414.1.1 Other provisions. Buildings and structures with an occupancy in Group H shall comply with this section and the applicable provisions of Section 415 and the *International Fire Code*.

[F] 414.1.2 Materials. The safe design of hazardous material occupancies is material dependent. Individual material requirements are also found in Sections 307 and 415, and in the *International Mechanical Code* and the *International Fire Code*.

[F] 414.1.2.1 Aerosols. Level 2 and 3 aerosol products shall be stored and displayed in accordance with the *International Fire Code*. See Section 311.2 and the *International Fire Code* for occupancy group requirements.

[F] 414.1.3 Information required. A report shall be submitted to the *building official* identifying the maximum expected quantities of hazardous materials to be stored, used in a *closed system* and used in an *open system*, and subdivided to separately address hazardous material classification categories based on Tables 307.1(1) and 307.1(2). The methods of protection from such hazards, including but not limited to *control areas*, fire protection systems and Group H occupancies shall be indicated in the report and on the *construction documents*. The opinion and report shall be prepared by a qualified person, firm or corporation *approved* by the *building official* and provided without charge to the enforcing agency.

For buildings and structures with an occupancy in Group H, separate floor plans shall be submitted identifying the locations of anticipated contents and processes so as to reflect the nature of each occupied portion of every building and structure.

[F] 414.2 Control areas. *Control areas* shall comply with Sections 414.2.1 through 414.2.5 and the *International Fire Code*.

[F] 414.2.1 Construction requirements. *Control areas* shall be separated from each other by *fire barriers* constructed in accordance with Section 707 or *horizontal assemblies* constructed in accordance with Section 711, or both.

[F] 414.2.2 Percentage of maximum allowable quantities. The percentage of maximum allowable quantities of hazardous materials per *control area* permitted at each floor level within a building shall be in accordance with Table 414.2.2.

[F] 414.2.3 Number. The maximum number of *control areas* within a building shall be in accordance with Table 414.2.2.

[F] 414.2.4 Fire-resistance-rating requirements. The required *fire-resistance rating* for *fire barriers* shall be in accordance with Table 414.2.2. The floor assembly of the *control area* and the construction supporting the floor of the *control area* shall have a *fire-resistance rating* of not less than 2 hours.

Exception: The floor assembly of the *control area* and the construction supporting the floor of the *control area* are allowed to be 1-hour fire-resistance rated in buildings of Types IIA, IIIA and VA construction, provided that both of the following conditions exist:

1. The building is equipped throughout with an *automatic sprinkler system* in accordance with Section 903.3.1.1; and
2. The building is three or fewer *stories above grade plane*.

[F] 414.2.5 Hazardous material in Group M display and storage areas and in Group S storage areas. The aggregate quantity of nonflammable solid and nonflammable or noncombustible liquid hazardous materials permitted within a single *control area* of a Group M display and

[F] TABLE 414.2.2
DESIGN AND NUMBER OF CONTROL AREAS

FLOOR LEVEL		PERCENTAGE OF THE MAXIMUM ALLOWABLE QUANTITY PER CONTROL AREA[a]	NUMBER OF CONTROL AREAS PER FLOOR	FIRE-RESISTANCE RATING FOR FIRE BARRIERS IN HOURS[b]
Above grade plane	Higher than 9	5	1	2
	7-9	5	2	2
	6	12.5	2	2
	5	12.5	2	2
	4	12.5	2	2
	3	50	2	1
	2	75	3	1
	1	100	4	1
Below grade plane	1	75	3	1
	2	50	2	1
	Lower than 2	Not Allowed	Not Allowed	Not Allowed

a. Percentages shall be of the maximum allowable quantity per control area shown in Tables 307.1(1) and 307.1(2), with all increases allowed in the notes to those tables.

b. Separation shall include fire barriers and horizontal assemblies as necessary to provide separation from other portions of the building.

storage area, a Group S storage area or an outdoor *control area* is permitted to exceed the maximum allowable quantities per *control area* specified in Tables 307.1(1) and 307.1(2) without classifying the building or use as a Group H occupancy, provided that the materials are displayed and stored in accordance with the *International Fire Code* and quantities do not exceed the maximum allowable specified in Table 414.2.5(1).

In Group M occupancy wholesale and retail sales uses, indoor storage of flammable and combustible liquids shall not exceed the maximum allowable quantities per *control area* as indicated in Table 414.2.5(2), provided that the materials are displayed and stored in accordance with the *International Fire Code*.

The maximum quantity of aerosol products in Group M occupancy retail display areas, storage areas adjacent to retail display areas and retail storage areas shall be in accordance with the *International Fire Code*.

[F] 414.3 Ventilation. Rooms, areas or spaces in which explosive, corrosive, combustible, flammable or highly toxic dusts, mists, fumes, vapors or gases are or may be emitted due to the processing, use, handling or storage of materials shall be mechanically ventilated where required by this code, the *International Fire Code* or the *International Mechanical Code*.

Emissions generated at workstations shall be confined to the area in which they are generated as specified in the *International Fire Code* and the *International Mechanical Code*.

[F] 414.4 Hazardous material systems. Systems involving hazardous materials shall be suitable for the intended application. Controls shall be designed to prevent materials from entering or leaving process or reaction systems at other than

[F] TABLE 414.2.5(1)
MAXIMUM ALLOWABLE QUANTITY PER INDOOR AND OUTDOOR CONTROL AREA IN GROUP M AND S OCCUPANCIES NONFLAMMABLE SOLIDS AND NONFLAMMABLE AND NONCOMBUSTIBLE LIQUIDS[d,e,f]

CONDITION		MAXIMUM ALLOWABLE QUANTITY PER CONTROL AREA	
Material[a]	Class	Solids pounds	Liquids gallons
A. Health-hazard materials—nonflammable and noncombustible solids and liquids			
1. Corrosives[b,c]	Not Applicable	9,750	975
2. Highly toxics	Not Applicable	20[b,c]	2[b,c]
3. Toxics[b,c]	Not Applicable	1,000	100
B. Physical-hazard materials—nonflammable and noncombustible solids and liquids			
1. Oxidizers[b,c]	4	Not Allowed	Not Allowed
	3	1,150[g]	115
	2	2,250[h]	225
	1	18,000[i,j]	1,800[i,j]
2. Unstable (reactives)[b,c]	4	Not Allowed	Not Allowed
	3	550	55
	2	1,150	115
	1	Not Limited	Not Limited
3. Water reactives	3[b,c]	550	55
	2[b,c]	1,150	115
	1	Not Limited	Not Limited

For SI: 1 pound = 0.454 kg, 1 gallon = 3.785 L.

a. Hazard categories are as specified in the *International Fire Code*.

b. Maximum allowable quantities shall be increased 100 percent in buildings that are sprinklered in accordance with Section 903.3.1.1. When Note c also applies, the increase for both notes shall be applied accumulatively.

c. Maximum allowable quantities shall be increased 100 percent when stored in approved storage cabinets, in accordance with the *International Fire Code*. When Note b also applies, the increase for both notes shall be applied accumulatively.

d. See Table 414.2.2 for design and number of control areas.

e. Allowable quantities for other hazardous material categories shall be in accordance with Section 307.

f. Maximum quantities shall be increased 100 percent in outdoor control areas.

g. Maximum amounts shall be increased to 2,250 pounds when individual packages are in the original sealed containers from the manufacturer or packager and do not exceed 10 pounds each.

h. Maximum amounts shall be increased to 4,500 pounds when individual packages are in the original sealed containers from the manufacturer or packager and do not exceed 10 pounds each.

i. The permitted quantities shall not be limited in a building equipped throughout with an automatic sprinkler system in accordance with Section 903.3.1.1.

j. Quantities are unlimited in an outdoor control area.

[F] TABLE 414.2.5(2)
MAXIMUM ALLOWABLE QUANTITY OF FLAMMABLE AND COMBUSTIBLE LIQUIDS IN WHOLESALE AND RETAIL SALES OCCUPANCIES PER CONTROL AREA[a]

TYPE OF LIQUID	MAXIMUM ALLOWABLE QUANTITY PER CONTROL AREA (gallons)		
	Sprinklered in accordance with note b densities and arrangements	Sprinklered in accordance with Tables 5704.3.6.3(4) through 5704.3.6.3(8) and 5704.3.7.5.1 of the *International Fire Code*	Nonsprinklered
Class IA	60	60	30
Class IB, IC, II and IIIA	7,500[c]	15,000[c]	1,600
Class IIIB	Unlimited	Unlimited	13,200

For SI: 1 foot = 304.8 mm, 1 square foot = 0.0929 m^2, 1 gallon = 3.785 L, 1 gallon per minute per square foot = 40.75 L/min/m^2.

a. Control areas shall be separated from each other by not less than a 1-hour fire barrier wall.

b. To be considered as sprinklered, a building shall be equipped throughout with an approved automatic sprinkler system with a design providing minimum densities as follows:

1. For uncartoned commodities on shelves 6 feet or less in height where the ceiling height does not exceed 18 feet, quantities are those permitted with a minimum sprinkler design density of Ordinary Hazard Group 2.
2. For cartoned, palletized or racked commodities where storage is 4 feet 6 inches or less in height and where the ceiling height does not exceed 18 feet, quantities are those permitted with a minimum sprinkler design density of 0.21 gallon per minute per square foot over the most remote 1,500-square-foot area.

c. Where wholesale and retail sales or storage areas exceed 50,000 square feet in area, the maximum allowable quantities are allowed to be increased by 2 percent for each 1,000 square feet of area in excess of 50,000 square feet, up to a maximum of 100 percent of the table amounts. A control area separation is not required. The cumulative amounts, including amounts attained by having an additional control area, shall not exceed 30,000 gallons.

the intended time, rate or path. Automatic controls, where provided, shall be designed to be fail safe.

[F] 414.5 Inside storage, dispensing and use. The inside storage, dispensing and use of hazardous materials shall be in accordance with Sections 414.5.1 through 414.5.3 of this code and the *International Fire Code*.

[F] 414.5.1 Explosion control. Explosion control shall be provided in accordance with the *International Fire Code* as required by Table 414.5.1 where quantities of hazardous materials specified in that table exceed the maximum allowable quantities in Table 307.1(1) or where a structure, room or space is occupied for purposes involving explosion hazards as required by Section 415 or the *International Fire Code*.

[F] 414.5.2 Emergency or standby power. Where required by the *International Fire Code* or this code, mechanical ventilation, treatment systems, temperature control, alarm, detection or other electrically operated systems shall be provided with emergency or standby power in accordance with Section 2702. For storage and use areas for highly toxic or toxic materials, see Sections 6004.2.2.8 and 6004.3.4.2 of the *International Fire Code*.

[F] 414.5.2.1 Exempt applications. Emergency or standby power is not required for the mechanical ventilation systems provided for any of the following:

1. Storage of Class IB and IC flammable and combustible liquids in closed containers not exceeding 6.5 gallons (25 L) capacity.
2. Storage of Class 1 and 2 oxidizers.
3. Storage of Class II, III, IV and V organic peroxides.
4. Storage of asphyxiant, irritant and radioactive gases.

[F] 414.5.2.2 Fail-safe engineered systems. Standby power for mechanical ventilation, treatment systems and temperature control systems shall not be required where an approved fail-safe engineered system is installed.

[F] 414.5.3 Spill control, drainage and containment. Rooms, buildings or areas occupied for the storage of solid and liquid hazardous materials shall be provided with a means to control spillage and to contain or drain off spillage and fire protection water discharged in the storage area where required in the *International Fire Code*. The methods of spill control shall be in accordance with the *International Fire Code*.

[F] 414.6 Outdoor storage, dispensing and use. The outdoor storage, dispensing and use of hazardous materials shall be in accordance with the *International Fire Code*.

[F] 414.6.1 Weather protection. Where weather protection is provided for sheltering outdoor hazardous material storage or use areas, such areas shall be considered outdoor storage or use when the weather protection structure complies with Sections 414.6.1.1 through 414.6.1.3.

[F] 414.6.1.1 Walls. Walls shall not obstruct more than one side of the structure.

Exception: Walls shall be permitted to obstruct portions of multiple sides of the structure, provided that the obstructed area is not greater than 25 percent of the structure's perimeter.

[F] 414.6.1.2 Separation distance. The distance from the structure to buildings, *lot lines*, *public ways* or *means of egress* to a *public way* shall be not less than the distance required for an outside hazardous material storage or use area without weather protection.

[F] 414.6.1.3 Noncombustible construction. The overhead structure shall be of *approved* noncombustible construction with a maximum area of 1,500 square feet (140 m^2).

Exception: The maximum area is permitted to be increased as provided by Section 506. *

SECTION 415
GROUPS H-1, H-2, H-3, H-4 AND H-5

[F] 415.1 Scope. The provisions of Sections 415.1 through 415.11 shall apply to the storage and use of hazardous materials in excess of the maximum allowable quantities per *control area* listed in Section 307.1. Buildings and structures with an occupancy in Group H shall also comply with the applicable provisions of Section 414 and the *International Fire Code*.

[F] 415.2 Definitions. The following terms are defined in Chapter 2:

CONTINUOUS GAS DETECTION SYSTEM.

DETACHED BUILDING.

EMERGENCY CONTROL STATION.

EXHAUSTED ENCLOSURE.

FABRICATION AREA.

FLAMMABLE VAPORS OR FUMES.

GAS CABINET.

GASROOM.

HAZARDOUS PRODUCTION MATERIAL (HPM).

HPM FLAMMABLE LIQUID.

HPM ROOM.

[F] TABLE 414.5.1
EXPLOSION CONTROL REQUIREMENTS[a, h]

MATERIAL	CLASS	EXPLOSION CONTROL METHODS	
		Barricade construction	Explosion (deflagration) venting or explosion (deflagration) prevention systems[b]
HAZARD CATEGORY			
Combustible dusts[c]	—	Not Required	Required
Cryogenic flammables	—	Not Required	Required
Explosives	Division 1.1 Division 1.2 Division 1.3 Division 1.4 Division 1.5 Division 1.6	Required Required Not Required Not Required Required Required	Not Required Not Required Required Required Not Required Not Required
Flammable gas	Gaseous Liquefied	Not Required Not Required	Required Required
Flammable liquid	IA[d] IB[e]	Not Required Not Required	Required Required
Organic peroxides	U I	Required Required	Not Permitted Not Permitted
Oxidizer liquids and solids	4	Required	Not Permitted
Pyrophoric gas	—	Not Required	Required
Unstable (reactive)	4 3 Detonable 3 Nondetonable	Required Required Not Required	Not Permitted Not Permitted Required
Water-reactive liquids and solids	3 2[g]	Not Required Not Required	Required Required
SPECIAL USES			
Acetylene generator rooms	—	Not Required	Required
Grain processing	—	Not Required	Required
Liquefied petroleum gas-distribution facilities	—	Not Required	Required
Where explosion hazards exist[f]	Detonation Deflagration	Required Not Required	Not Permitted Required

a. See Section 414.1.3.
b. See the *International Fire Code*.
c. As generated during manufacturing or processing.
d. Storage or use.
e. In open use or dispensing.
f. Rooms containing dispensing and use of hazardous materials when an explosive environment can occur because of the characteristics or nature of the hazardous materials or as a result of the dispensing or use process.
g. A method of explosion control shall be provided when Class 2 water-reactive materials can form potentially explosive mixtures.
h. Explosion venting is not required for Group H-5 fabrication areas complying with Section 415.11.1 and the *International Fire Code*.

IMMEDIATELY DANGEROUS TO LIFE AND HEALTH (IDLH).

LIQUID.

LIQUID STORAGE ROOM.

LIQUID USE, DISPENSING AND MIXING ROOM.

LOWER FLAMMABLE LIMIT (LFL).

NORMAL TEMPERATURE AND PRESSURE (NTP).

PHYSIOLOGICAL WARNING THRESHOLD LEVEL.

SERVICE CORRIDOR.

SOLID.

STORAGE, HAZARDOUS MATERIALS.

USE (MATERIAL).

WORKSTATION.

[F] 415.3 Automatic fire detection systems. Group H occupancies shall be provided with an automatic fire detection system in accordance with Section 907.2.

[F] 415.4 Automatic sprinkler system. Group H occupancies shall be equipped throughout with an *automatic sprinkler system* in accordance with Section 903.2.5.

** **[F] 415.5 Emergency alarms.** Emergency alarms for the detection and notification of an emergency condition in Group H occupancies shall be provided as set forth herein.

[F] 415.5.1 Storage. An approved manual emergency alarm system shall be provided in buildings, rooms or areas used for storage of hazardous materials. Emergency alarm-initiating devices shall be installed outside of each interior exit or exit access door of storage buildings, rooms or areas. Activation of an emergency alarm-initiating device shall sound a local alarm to alert occupants of an emergency situation involving hazardous materials.

[F] 415.5.2 Dispensing, use and handling. Where hazardous materials having a hazard ranking of 3 or 4 in accordance with NFPA 704 are transported through corridors, interior exit stairways or ramps, or exit passageways, there shall be an emergency telephone system, a local manual alarm station or an approved alarm-initiating device at not more than 150-foot (45 720 mm) intervals and at each exit and exit access doorway throughout the transport route. The signal shall be relayed to an approved central, proprietary or remote station service or constantly attended on-site location and shall initiate a local audible alarm.

[F] 415.5.3 Supervision. Emergency alarm systems shall be supervised by an approved central, proprietary or remote station service or shall initiate an audible and visual signal at a constantly attended on-site location.

[F] 415.5.4 Emergency alarm systems. *Emergency alarm systems* shall be provided with emergency power in accordance with Section 2702.

[F] 415.6 Fire separation distance. Group H occupancies shall be located on property in accordance with the other provisions of this chapter. In Groups H-2 and H-3, not less than 25 percent of the perimeter wall of the occupancy shall be an *exterior wall.*

Exceptions:

1. *Liquid use, dispensing and mixing rooms* having a floor area of not more than 500 square feet (46.5 m^2) need not be located on the outer perimeter of the building where they are in accordance with the *International Fire Code* and NFPA 30.
2. *Liquid storage rooms* having a floor area of not more than 1,000 square feet (93 m^2) need not be located on the outer perimeter where they are in accordance with the *International Fire Code* and NFPA 30.
3. Spray paint booths that comply with the *International Fire Code* need not be located on the outer perimeter.

[F] 415.6.1 Group H occupancy minimum fire separation distance. Regardless of any other provisions, buildings containing Group H occupancies shall be set back to the minimum *fire separation distance* as set forth in Sections 415.6.1.1 through 415.6.1.4. Distances shall be measured from the walls enclosing the occupancy to *lot lines,* including those on a public way. Distances to assumed *lot lines* established for the purpose of determining exterior wall and opening protection are not to be used to establish the minimum *fire separation distance* for buildings on sites where explosives are manufactured or used when separation is provided in accordance with the quantity distance tables specified for explosive materials in the *International Fire Code.*

[F] 415.6.1.1 Group H-1. Group H-1 occupancies shall be set back not less than 75 feet (22 860 mm) and not less than required by the *International Fire Code.*

Exception: Fireworks manufacturing buildings separated in accordance with NFPA 1124.

[F] 415.6.1.2 Group H-2. Group H-2 occupancies shall be set back not less than 30 feet (9144 mm) where the area of the occupancy is greater than 1,000 square feet (93 m^2) and it is not required to be located in a *detached building.*

[F] 415.6.1.3 Groups H-2 and H-3. Group H-2 and H-3 occupancies shall be set back not less than 50 feet (15 240 mm) where a *detached building* is required (see Table 415.6.2).

[F] 415.6.1.4 Explosive materials. Group H-2 and H-3 occupancies containing materials with explosive characteristics shall be separated as required by the *International Fire Code.* Where separations are not specified, the distances required shall be determined by a technical report issued in accordance with Section 414.1.3.

[F] 415.6.2 Detached buildings for Group H-1, H-2 or H-3 occupancy. The storage or use of hazardous materials in excess of those amounts listed in Table 415.6.2 shall be in accordance with the applicable provisions of Sections 415.7 and 415.8.

[F] 415.6.2.1 Wall and opening protection. Where a *detached building* is required by Table 415.6.2, there are no requirements for wall and opening protection based on *fire separation distance.*

[F] 415.7 Special provisions for Group H-1 occupancies. Group H-1 occupancies shall be in detached buildings used for no other purpose. Roofs shall be of lightweight construction with suitable thermal insulation to prevent sensitive material from reaching its decomposition temperature. Group H-1 occupancies containing materials that are in themselves both physical and health hazards in quantities exceeding the maximum allowable quantities per *control area* in Table 307.1(2) shall comply with requirements for both Group H-1 and H-4 occupancies.

[F] 415.7.1 Floors in storage rooms. Floors in storage areas for organic peroxides, pyrophoric materials and unstable (reactive) materials shall be of liquid-tight, noncombustible construction.

[F] 415.8 Special provisions for Group H-2 and H-3 occupancies. Group H-2 and H-3 occupancies containing quantities of hazardous materials in excess of those set forth in Table 415.6.2 shall be in *detached buildings* used for manufacturing, processing, dispensing, use or storage of hazardous materials. Materials listed for Group H-1 occupancies in Section 307.3 are permitted to be located within Group H-2 or H-3 *detached buildings* provided the amount of materials per *control area* do not exceed the maximum allowed quantity specified in Table 307.1(1).

[F] 415.8.1 Multiple hazards. Group H-2 or H-3 occupancies containing materials that are in themselves both physical and health hazards in quantities exceeding the maximum allowable quantities per *control area* in Table 307.1(2) shall comply with requirements for Group H-2, H-3 or H-4 occupancies as applicable.

[F] 415.8.2 Separation of incompatible materials. Hazardous materials other than those listed in Table 415.6.2 shall be allowed in manufacturing, processing, dispensing, use or storage areas when separated from incompatible materials in accordance with the provisions of the *International Fire Code.*

[F] 415.8.3 Water reactives. Group H-2 and H-3 occupancies containing water-reactive materials shall be resistant to water penetration. Piping for conveying liquids shall not be over or through areas containing water reactives, unless isolated by *approved* liquid-tight construction.

Exception: Fire protection piping shall be permitted over or through areas containing water reactives without isolating it with liquid-tight construction.

[F] TABLE 415.6.2
DETACHED BUILDING REQUIRED

A DETACHED BUILDING IS REQUIRED WHEN THE QUANTITY OF MATERIAL EXCEEDS THAT LISTED HEREIN			
Material	Class	Solids and Liquids (tons)[a, b]	Gases (cubic feet)[a, b]
Explosives	Division 1.1 Division 1.2 Division 1.3 Division 1.4 Division 1.4[c] Division 1.5 Division 1.6	Maximum Allowable Quantity Maximum Allowable Quantity Maximum Allowable Quantity Maximum Allowable Quantity 1 Maximum Allowable Quantity Maximum Allowable Quantity	Not Applicable
Oxidizers	Class 4	Maximum Allowable Quantity	Maximum Allowable Quantity
Unstable (reactives) detonable	Class 3 or 4	Maximum Allowable Quantity	Maximum Allowable Quantity
Oxidizer, liquids and solids	Class 3 Class 2	1,200 2,000	Not Applicable Not Applicable
Organic peroxides	Detonable Class I Class II Class III	Maximum Allowable Quantity Maximum Allowable Quantity 25 50	Not Applicable Not Applicable Not Applicable Not Applicable
Unstable (reactives) nondetonable	Class 3 Class 2	1 25	2,000 10,000
Water reactives	Class 3 Class 2	1 25	Not Applicable Not Applicable
Pyrophoric gases	Not Applicable	Not Applicable	2,000

For SI: 1 ton = 906 kg, 1 cubic foot = 0.02832 m^3, 1 pound = 0.454 kg.

a. For materials that are detonable, the distance to other buildings or lot lines shall be in accordance with Chapter 56 of the *International Fire Code* based on trinitrotoluene (TNT) equivalence of the material. For materials classified as explosives, see Chapter 56 of the *International Fire Code.*

b. "Maximum Allowable Quantity" means the maximum allowable quantity per control area set forth in Table 307.1(1).

c. Limited to Division 1.4 materials and articles, including articles packaged for shipment, that are not regulated as an explosive under Bureau of Alcohol, Tobacco, Firearms and Explosives (BATF) regulations or unpackaged articles used in process operations that do not propagate a detonation or deflagration between articles, provided the net explosive weight of individual articles does not exceed 1 pound.

[F] 415.8.4 Floors in storage rooms. Floors in storage areas for organic peroxides, oxidizers, pyrophoric materials, unstable (reactive) materials and water-reactive solids and liquids shall be of liquid-tight, noncombustible construction.

[F] 415.8.5 Waterproof room. Rooms or areas used for the storage of water-reactive solids and liquids shall be constructed in a manner that resists the penetration of water through the use of waterproof materials. Piping carrying water for other than *approved automatic sprinkler systems* shall not be within such rooms or areas.

[F] 415.9 Group H-2. Occupancies in Group H-2 shall be constructed in accordance with Sections 415.9.1 through 415.9.3 and the *International Fire Code*.

*

[F] 415.9.1 Flammable and combustible liquids. The storage, handling, processing and transporting of flammable and combustible liquids in Group H-2 and H-3 occupancies shall be in accordance with Sections 415.9.1.1 through 415.9.1.9, the *International Mechanical Code* and the *International Fire Code*.

[F] 415.9.1.1 Mixed occupancies. Where the storage tank area is located in a building of two or more occupancies and the quantity of liquid exceeds the maximum allowable quantity for one *control area*, the use shall be completely separated from adjacent occupancies in accordance with the requirements of Section 508.4.

[F] 415.9.1.1.1 Height exception. Where storage tanks are located within a building no more than one story above grade plane, the height limitation of Section 504 shall not apply for Group H.

[F] 415.9.1.2 Tank protection. Storage tanks shall be noncombustible and protected from physical damage. *Fire barriers* or *horizontal assemblies* or both around the storage tanks shall be permitted as the method of protection from physical damage.

[F] 415.9.1.3 Tanks. Storage tanks shall be *approved* tanks conforming to the requirements of the *International Fire Code*.

[F] 415.9.1.4 Leakage containment. A liquid-tight containment area compatible with the stored liquid shall be provided. The method of spill control, drainage control and secondary containment shall be in accordance with the *International Fire Code*.

Exception: Rooms where only double-wall storage tanks conforming to Section 415.9.1.3 are used to store Class I, II and IIIA flammable and combustible liquids shall not be required to have a leakage containment area.

[F] 415.9.1.5 Leakage alarm. An *approved* automatic alarm shall be provided to indicate a leak in a storage tank and room. The alarm shall sound an audible signal, 15 dBa above the ambient sound level, at every point of entry into the room in which the leaking storage tank is located. An *approved* sign shall be posted on every entry door to the tank storage room indicating the potential hazard of the interior room environment, or the sign shall state: WARNING, WHEN ALARM SOUNDS, THE ENVIRONMENT WITHIN THE ROOM MAY BE HAZARDOUS. The leakage alarm shall also be supervised in accordance with Chapter 9 to transmit a trouble signal.

[F] 415.9.1.6 Tank vent. Storage tank vents for Class I, II or IIIA liquids shall terminate to the outdoor air in accordance with the *International Fire Code*.

[F] 415.9.1.7 Room ventilation. Storage tank areas storing Class I, II or IIIA liquids shall be provided with mechanical *ventilation*. The mechanical *ventilation* system shall be in accordance with the *International Mechanical Code* and the *International Fire Code*.

[F] 415.9.1.8 Explosion venting. Where Class I liquids are being stored, explosion venting shall be provided in accordance with the *International Fire Code*.

[F] 415.9.1.9 Tank openings other than vents. Tank openings other than vents from tanks inside buildings shall be designed to ensure that liquids or vapor concentrations are not released inside the building.

[F] 415.9.2 Liquefied petroleum gas facilities. The construction and installation of liquefied petroleum gas facilities shall be in accordance with the requirements of this code, the *International Fire Code*, the *International Mechanical Code*, the *International Fuel Gas Code* and NFPA 58.

[F] 415.9.3 Dry cleaning plants. The construction and installation of dry cleaning plants shall be in accordance with the requirements of this code, the *International Mechanical Code*, the *International Plumbing Code* and NFPA 32. Dry cleaning solvents and systems shall be classified in accordance with the *International Fire Code*.

[F] 415.10 Groups H-3 and H-4. Groups H-3 and H-4 shall be constructed in accordance with the applicable provisions of this code and the *International Fire Code*.

[F] 415.10.1 Flammable and combustible liquids. The storage, handling, processing and transporting of flammable and combustible liquids in Group H-3 occupancies shall be in accordance with Section 415.9.1.

[F] 415.10.2 Gas rooms. Where gas rooms are provided, such rooms shall be separated from other areas by not less than 1-hour *fire barriers* constructed in accordance with Section 707 or *horizontal assemblies* constructed in accordance with Section 711, or both.

[F] 415.10.3 Floors in storage rooms. Floors in storage areas for corrosive liquids and highly toxic or toxic materials shall be of liquid-tight, noncombustible construction.

[F] 415.10.4 Separation-highly toxic solids and liquids. Highly toxic solids and liquids not stored in *approved* hazardous materials storage cabinets shall be isolated from other hazardous materials storage by not less than 1-hour *fire barriers* constructed in accordance with Section 707 or *horizontal assemblies* constructed in accordance with Section 711, or both.

[F] 415.11 Group H-5. In addition to the requirements set forth elsewhere in this code, Group H-5 shall comply with the

provisions of Sections 415.11.1 through 415.11.11 and the *International Fire Code.*

[F] 415.11.1 Fabrication areas. *Fabrication areas* shall comply with Sections 415.11.1.1 through 415.11.1.8.

[F] 415.11.1.1 Hazardous materials. Hazardous materials and hazardous production materials (HPM) shall comply with Sections 415.11.1.1.1 and 415.11.1.1.2.

[F] 415.11.1.1.1 Aggregate quantities. The aggregate quantities of hazardous materials stored and used in a single *fabrication area* shall not exceed the quantities set forth in Table 415.11.1.1.1.

Exception: The quantity limitations for any hazard category in Table 415.11.1.1.1 shall not apply where the *fabrication area* contains quantities of hazardous materials not exceeding the maximum allowable quantities per *control area* established by Tables 307.1(1) and 307.1(2).

[F] 415.11.1.1.2 Hazardous production materials. The maximum quantities of hazardous production materials (HPM) stored in a single *fabrication area* shall not exceed the maximum allowable quantities per *control area* established by Tables 307.1(1) and 307.1(2).

[F] 415.11.1.2 Separation. *Fabrication areas*, whose sizes are limited by the quantity of hazardous materials allowed by Table 415.11.1.1.1, shall be separated from each other, from *corridors* and from other parts of the building by not less than 1-hour *fire barriers* constructed in accordance with Section 707 or *horizontal assemblies* constructed in accordance with Section 711, or both.

Exceptions:

1. Doors within such *fire barrier* walls, including doors to *corridors*, shall be only *self-closing fire door assemblies* having a *fire protection rating* of not less than $^3/_4$ hour.
2. Windows between *fabrication areas* and *corridors* are permitted to be fixed glazing *listed* and labeled for a *fire protection rating* of not less than $^3/_4$ hour in accordance with Section 716.

[F] 415.11.1.3 Location of occupied levels. Occupied levels of *fabrication areas* shall be located at or above the first *story above grade plane.*

[F] 415.11.1.4 Floors. Except for surfacing, floors within *fabrication areas* shall be of noncombustible construction.

Openings through floors of *fabrication areas* are permitted to be unprotected where the interconnected levels are used solely for mechanical equipment directly related to such *fabrication areas* (see also Section 415.11.1.5).

Floors forming a part of an occupancy separation shall be liquid tight.

[F] 415.11.1.5 Shafts and openings through floors. Elevator hoistways, vent *shafts* and other openings through floors shall be enclosed where required by Sections 712 and 713. Mechanical, duct and piping penetrations within a *fabrication area* shall not extend through more than two floors. The *annular space* around penetrations for cables, cable trays, tubing, piping, conduit or ducts shall be sealed at the floor level to restrict the movement of air. The *fabrication area*, including the areas through which the ductwork and piping extend, shall be considered a single conditioned environment.

[F] 415.11.1.6 Ventilation. Mechanical exhaust *ventilation* at the rate of not less than 1 cubic foot per minute per square foot [0.0051 $m^3/(s \cdot m^2)$] of floor area shall be provided throughout the portions of the *fabrication area* where HPM are used or stored. The exhaust air duct system of one *fabrication area* shall not connect to another duct system outside that *fabrication area* within the building.

A *ventilation* system shall be provided to capture and exhaust gases, fumes and vapors at workstations.

Two or more operations at a workstation shall not be connected to the same exhaust system where either one or the combination of the substances removed could constitute a fire, explosion or hazardous chemical reaction within the exhaust duct system.

Exhaust ducts penetrating *fire barriers* constructed in accordance with Section 707 or *horizontal assemblies* constructed in accordance with Section 711 shall be contained in a *shaft* of equivalent fire-resistance-rated construction. Exhaust ducts shall not penetrate *fire walls.*

Fire dampers shall not be installed in exhaust ducts.

[F] 415.11.1.7 Transporting hazardous production materials to fabrication areas. HPM shall be transported to *fabrication areas* through enclosed piping or tubing systems that comply with Section 415.11.6, through *service corridors* complying with Section 415.11.3, or in *corridors* as permitted in the exception to Section 415.11.2. The handling or transporting of HPM within *service corridors* shall comply with the *International Fire Code.*

[F] 415.11.1.8 Electrical. Electrical equipment and devices within the *fabrication area* shall comply with NFPA 70. The requirements for hazardous locations need not be applied where the average air change is at least four times that set forth in Section 415.11.1.6 and where the number of air changes at any location is not less than three times that required by Section 415.11.1.6. The use of recirculated air shall be permitted.

[F] 415.11.1.8.1 Workstations. Workstations shall not be energized without adequate exhaust *ventilation.* See Section 415.11.1.6 for workstation exhaust *ventilation* requirements.

[F] TABLE 415.11.1.1.1
QUANTITY LIMITS FOR HAZARDOUS MATERIALS IN A SINGLE FABRICATION AREA IN GROUP H-5[a]

HAZARD CATEGORY		SOLIDS (pounds per square foot)	LIQUIDS (gallons per square foot)	GAS (cubic feet @ NTP/square foot)
PHYSICAL-HAZARD MATERIALS				
Combustible dust		Note b	Not Applicable	Not Applicable
Combustible fiber	Loose Baled	Note b Notes b, c	Not Applicable	Not Applicable
Combustible liquid Combination Class	II IIIA IIIB I, II and IIIA	Not Applicable	0.01 0.02 Not Limited 0.04	Not Applicable
Cryogenic gas	Flammable Oxidizing	Not Applicable	Not Applicable	Note d 1.25
Explosives		Note b	Note b	Note b
Flammable gas	Gaseous Liquefied	Not Applicable	Not Applicable	Note d Note d
Flammable liquid Combination Class Combination Class	IA IB IC IA, IB and IC I, II and IIIA	Not Applicable	0.0025 0.025 0.025 0.025 0.04	Not Applicable
Flammable solid		0.001	Not Applicable	Not Applicable
Organic peroxide	Unclassified detonable Class I Class II Class III Class IV Class V	Note b Note b 0.025 0.1 Not Limited Not Limited	Not Applicable	Not Applicable
Oxidizing gas Combination of gaseous and liquefied	Gaseous Liquefied	Not Applicable	Not Applicable	1.25 1.25 1.25
Oxidizer Combination Class	Class 4 Class 3 Class 2 Class 1 1, 2, 3	Note b 0.003 0.003 0.003 0.003	Note b 0.03 0.03 0.03 0.03	Not Applicable
Pyrophoric materials		0.01	0.00125	Notes d and e
Unstable (reactive)	Class 4 Class 3 Class 2 Class 1	Note b 0.025 0.1 Not Limited	Note b 0.0025 0.01 Not Limited	Note b Note b Note b Not Limited
Water reactive	Class 3 Class 2 Class 1	Note b 0.25 Not Limited	0.00125 0.025 Not Limited	Not Applicable
HEALTH-HAZARD MATERIALS				
Corrosives		Not Limited	Not Limited	Not Limited
Highly toxic		Not Limited	Not Limited	Note d
Toxics		Not Limited	Not Limited	Note d

For SI: 1 pound per square foot = 4.882 kg/m^2, 1 gallon per square foot = 40.7 L/m^2, 1 cubic foot @ NTP/square foot = 0.305 m^3 @ NTP/m^2, 1 cubic foot = 0.02832 m^3.

a. Hazardous materials within piping shall not be included in the calculated quantities.

b. Quantity of hazardous materials in a single fabrication shall not exceed the maximum allowable quantities per control area in Tables 307.1(1) and 307.1(2).

c. Densely packed baled cotton that complies with the packing requirements of ISO 8115 shall not be included in this material class.

d. The aggregate quantity of flammable, pyrophoric, toxic and highly toxic gases shall not exceed 9,000 cubic feet at NTP.

e. The aggregate quantity of pyrophoric gases in the building shall not exceed the amounts set forth in Table 415.6.2.

[F] 415.11.2 Corridors. *Corridors* shall comply with Chapter 10 and shall be separated from *fabrication areas* as specified in Section 415.11.1.2. *Corridors* shall not contain HPM and shall not be used for transporting such materials except through closed piping systems as provided in Section 415.11.6.4

Exception: Where existing *fabrication areas* are altered or modified, HPM is allowed to be transported in existing *corridors,* subject to the following conditions:

1. Nonproduction HPM is allowed to be transported in *corridors* if utilized for maintenance, lab work and testing.
2. Where existing *fabrication areas* are altered or modified, HPM is allowed to be transported in existing *corridors*, subject to the following conditions:
   - 2.1. Corridors. *Corridors* adjacent to the *fabrication area* where the alteration work is to be done shall comply with Section 1020 for a length determined as follows:
     - 2.1.1. The length of the common wall of the *corridor* and the *fabrication area*; and
     - 2.1.2. For the distance along the *corridor* to the point of entry of HPM into the *corridor* serving that *fabrication area.*
   - 2.2. *Emergency alarm system.* There shall be an emergency telephone system, a local manual alarm station or other *approved* alarm-initiating device within *corridors* at not more than 150-foot (45 720 mm) intervals and at each *exit* and doorway. The signal shall be relayed to an *approved* central, proprietary or remote station service or the emergency control station and shall also initiate a local audible alarm.
   - 2.3. Pass-throughs. *Self-closing* doors having a *fire protection rating* of not less than 1 hour shall separate pass-throughs from existing *corridors.* Pass-throughs shall be constructed as required for the *corridors* and protected by an *approved automatic sprinkler system.*

[F] 415.11.3 Service corridors. *Service corridors* within a Group H-5 occupancy shall comply with Sections 415.11.3.1 through 415.11.3.4.

[F] 415.11.3.1 Use conditions. *Service corridors* shall be separated from *corridors* as required by Section 415.11.1.2. *Service corridors* shall not be used as a required *corridor.*

[F] 415.11.3.2 Mechanical ventilation. Service corridors shall be mechanically ventilated as required by Section 415.11.1.6 or at not less than six air changes per hour.

[F] 415.11.3.3 Means of egress. The distance of travel from any point in a *service corridor* to an *exit, exit access corridor* or door into a *fabrication area* shall be not greater than 75 feet (22 860 mm). Dead ends shall be not greater than 4 feet (1219 mm) in length. There shall be not less than two *exits*, and not more than one-half of the required *means of egress* shall require travel into a *fabrication area.* Doors from *service corridors* shall swing in the direction of egress travel and shall be *self-closing.*

[F] 415.11.3.4 Minimum width. The clear width of a *service corridor* shall be not less than 5 feet (1524 mm), or 33 inches (838 mm) wider than the widest cart or truck used in the *service corridor*, whichever is greater.

[F] 415.11.3.5 Emergency alarm system. *Emergency alarm systems* shall be provided in accordance with this section and Sections 415.5.1 and 415.5.2. The maximum allowable quantity per *control area* provisions shall not apply to *emergency alarm systems* required for HPM.

[F] 415.11.3.5.1 Service corridors. An *emergency alarm system* shall be provided in *service corridors,* with no fewer than one alarm device in each *service corridor.*

[F] 415.11.3.5.2 Corridors and interior exit stairways and ramps. Emergency alarms for *corridors, interior exit stairways* and *ramps* and *exit passageways* shall comply with Section 415.5.2.

[F] 415.11.3.5.3 Liquid storage rooms, HPM rooms and gas rooms. Emergency alarms for liquid storage rooms, HPM rooms and gas rooms shall comply with Section 415.5.1.

[F] 415.11.3.5.4 Alarm-initiating devices. An *approved* emergency telephone system, local alarm manual pull stations, or other *approved* alarm-initiating devices are allowed to be used as emergency alarm-initiating devices.

[F] 415.11.3.5.5 Alarm signals. Activation of the *emergency alarm system* shall sound a local alarm and transmit a signal to the emergency control station.

[F] 415.11.4 Storage of hazardous production materials. Storage of hazardous production materials (HPM) in *fabrication areas* shall be within *approved* or *listed* storage cabinets or gas cabinets or within a workstation. The storage of HPM in quantities greater than those listed in Section 5004.2 of the *International Fire Code* shall be in liquid storage rooms, HPM rooms or gas rooms as appropriate for the materials stored. The storage of other hazardous materials shall be in accordance with other applicable provisions of this code and the *International Fire Code.*

[F] 415.11.5 HPM rooms, gas rooms, liquid storage room construction. HPM rooms, gas rooms and liquid shall be constructed in accordance with Sections 415.11.5.1 through 415.11.5.9.

[F] 415.11.5.1 HPM rooms and gas rooms. HPM rooms and gas rooms shall be separated from other areas by *fire barriers* constructed in accordance with Section 707 or *horizontal assemblies* constructed in accordance with Section 711, or both. The *fire-resistance rating* shall be not less than 2 hours where the area is 300 square feet (27.9 m^2) or more and not less than 1 hour where the area is less than 300 square feet (27.9 m^2).

[F] 415.11.5.2 Liquid storage rooms. Liquid storage rooms shall be constructed in accordance with the following requirements:

1. Rooms greater than 500 square feet (46.5 m^2) in area, shall have no fewer than one exterior door *approved* for fire department access.
2. Rooms shall be separated from other areas by *fire barriers* constructed in accordance with Section 707 or *horizontal assemblies* constructed in accordance with Section 711, or both. The *fire-resistance rating* shall be not less than 1 hour for rooms up to 150 square feet (13.9 m^2) in area and not less than 2 hours where the room is more than 150 square feet (13.9 m^2) in area.
3. Shelving, racks and wainscotting in such areas shall be of noncombustible construction or wood of not less than 1-inch (25 mm) nominal thickness or fire-retardant-treated wood complying with Section 2303.2.
4. Rooms used for the storage of Class I flammable liquids shall not be located in a *basement*.

[F] 415.11.5.3 Floors. Except for surfacing, floors of HPM rooms and liquid storage rooms shall be of noncombustible liquid-tight construction. Raised grating over floors shall be of noncombustible materials.

[F] 415.11.5.4 Location. Where HPM rooms, liquid storage rooms and gas rooms are provided, they shall have no fewer than one *exterior wall* and such wall shall be not less than 30 feet (9144 mm) from *lot lines*, including *lot lines* adjacent to *public ways*.

[F] 415.11.5.5 Explosion control. Explosion control shall be provided where required by Section 414.5.1.

[F] 415.11.5.6 Exits. Where two *exits* are required from HPM rooms, liquid storage rooms and gas rooms, one shall be directly to the outside of the building.

[F] 415.11.5.7 Doors. Doors in a *fire barrier* wall, including doors to *corridors*, shall be *self-closing fire door assemblies* having a *fire protection rating* of not less than $^3/_4$ hour.

[F] 415.11.5.8 Ventilation. Mechanical exhaust ventilation shall be provided in liquid storage rooms, HPM rooms and gas rooms at the rate of not less than 1 cubic foot per minute per square foot (0.044 L/s/m^2) of floor area or six air changes per hour.

Exhaust ventilation for gas rooms shall be designed to operate at a negative pressure in relation to the surrounding areas and direct the exhaust ventilation to an exhaust system.

[F] 415.11.5.9 Emergency alarm system. An *approved emergency alarm system* shall be provided for HPM rooms, liquid storage rooms and gas rooms.

Emergency alarm-initiating devices shall be installed outside of each interior *exit* door of such rooms.

Activation of an emergency alarm-initiating device shall sound a local alarm and transmit a signal to the emergency control station.

An *approved* emergency telephone system, local alarm manual pull stations or other *approved* alarm-initiating devices are allowed to be used as emergency alarm-initiating devices.

[F] 415.11.6 Piping and tubing. Hazardous production materials piping and tubing shall comply with this section and ASME B31.3.

[F] 415.11.6.1 HPM having a health-hazard ranking of 3 or 4. Systems supplying HPM liquids or gases having a health-hazard ranking of 3 or 4 shall be welded throughout, except for connections, to the systems that are within a ventilated enclosure if the material is a gas, or an *approved* method of drainage or containment is provided for the connections if the material is a liquid.

[F] 415.11.6.2 Location in service corridors. Hazardous production materials supply piping or tubing in *service corridors* shall be exposed to view.

[F] 415.11.6.3 Excess flow control. Where HPM gases or liquids are carried in pressurized piping above 15 pounds per square inch gauge (psig) (103.4 kPa), excess flow control shall be provided. Where the piping originates from within a liquid storage room, HPM room or gas room, the excess flow control shall be located within the liquid storage room, HPM room or gas room. Where the piping originates from a bulk source, the excess flow control shall be located as close to the bulk source as practical.

[F] 415.11.6.4 Installations in corridors and above other occupancies. The installation of HPM piping and tubing within the space defined by the walls of *corridors* and the floor or roof above, or in concealed spaces above other occupancies, shall be in accordance with Sections 415.11.6.1 through 415.11.6.3 and the following conditions:

1. Automatic sprinklers shall be installed within the space unless the space is less than 6 inches (152 mm) in the least dimension.
2. *Ventilation* not less than six air changes per hour shall be provided. The space shall not be used to convey air from any other area.
3. Where the piping or tubing is used to transport HPM liquids, a receptor shall be installed below such piping or tubing. The receptor shall be

designed to collect any discharge or leakage and drain it to an *approved* location. The 1-hour enclosure shall not be used as part of the receptor.

4. HPM supply piping and tubing and nonmetallic waste lines shall be separated from the corridor and from occupancies other than Group H-5 by fire barriers or by an approved method or assembly that has a fire-resistance rating of not less than 1 hour. Access openings into the enclosure shall be protected by approved fire-protection-rated assemblies.
5. Readily accessible manual or automatic remotely activated fail-safe emergency shutoff valves shall be installed on piping and tubing other than waste lines at the following locations:
   5.1. At branch connections into the *fabrication area.*
   5.2. At entries into *corridors*.

Exception: Transverse crossings of the *corridors* by supply piping that is enclosed within a ferrous pipe or tube for the width of the *corridor* need not comply with Items 1 through 5.

[F] 415.11.6.5 Identification. Piping, tubing and HPM waste lines shall be identified in accordance with ANSI A13.1 to indicate the material being transported.

[F] 415.11.7 Continuous gas detection systems. A *continuous gas detection system* shall be provided for HPM gases where the physiological warning threshold level of the gas is at a higher level than the accepted permissible exposure limit (PEL) for the gas and for flammable gases in accordance with Sections 415.11.7.1 and 415.11.7.2.

[F] 415.11.7.1 Where required. A *continuous gas detection system* shall be provided in the areas identified in Sections 415.11.7.1.1 through 415.11.7.1.4.

[F] 415.11.7.1.1 Fabrication areas. A *continuous gas detection system* shall be provided in *fabrication areas* where gas is used in the *fabrication area.*

[F] 415.11.7.1.2 HPM rooms. A *continuous gas detection system* shall be provided in HPM rooms where gas is used in the room.

[F] 415.11.7.1.3 Gas cabinets, exhausted enclosures and gas rooms. A *continuous gas detection system* shall be provided in gas cabinets and exhausted enclosures. A *continuous gas detection system* shall be provided in gas rooms where gases are not located in gas cabinets or exhausted enclosures.

[F] 415.11.7.1.4 Corridors. Where gases are transported in piping placed within the space defined by the walls of a *corridor* and the floor or roof above the *corridor*, a *continuous gas detection system* shall be provided where piping is located and in the *corridor*.

Exception: A *continuous gas detection system* is not required for occasional transverse crossings of the *corridors* by supply piping that is enclosed in a ferrous pipe or tube for the width of the *corridor.*

[F] 415.11.7.2 Gas detection system operation. The *continuous gas detection system* shall be capable of monitoring the room, area or equipment in which the gas is located at or below all the following gas concentrations:

1. Immediately dangerous to life and health (IDLH) values where the monitoring point is within an exhausted enclosure, ventilated enclosure or gas cabinet.
2. Permissible exposure limit (PEL) levels where the monitoring point is in an area outside an exhausted enclosure, ventilated enclosure or gas cabinet.
3. For flammable gases, the monitoring detection threshold level shall be vapor concentrations in excess of 25 percent of the lower flammable limit (LFL) where the monitoring is within or outside an exhausted enclosure, ventilated enclosure or gas cabinet.
4. Except as noted in this section, monitoring for highly toxic and toxic gases shall also comply with Chapter 60 of the *International Fire Code.*

[F] 415.11.7.2.1 Alarms. The gas detection system shall initiate a local alarm and transmit a signal to the emergency control station when a short-term hazard condition is detected. The alarm shall be both visual and audible and shall provide warning both inside and outside the area where the gas is detected. The audible alarm shall be distinct from all other alarms.

[F] 415.11.7.2.2 Shutoff of gas supply. The gas detection system shall automatically close the shutoff valve at the source on gas supply piping and tubing related to the system being monitored for which gas is detected when a short-term hazard condition is detected. Automatic closure of shutoff valves shall comply with the following:

1. Where the gas detection sampling point initiating the gas detection system alarm is within a gas cabinet or exhausted enclosure, the shutoff valve in the gas cabinet or exhausted enclosure for the specific gas detected shall automatically close.
2. Where the gas detection sampling point initiating the gas detection system alarm is within a room and compressed gas containers are not in gas cabinets or an exhausted enclosure, the shutoff valves on all gas lines for the specific gas detected shall automatically close.
3. Where the gas detection sampling point initiating the gas detection system alarm is within a piping distribution manifold enclosure, the shutoff valve supplying the manifold for the

compressed gas container of the specific gas detected shall automatically close.

Exception: Where the gas detection sampling point initiating the gas detection system alarm is at the use location or within a gas valve enclosure of a branch line downstream of a piping distribution manifold, the shutoff valve for the branch line located in the piping distribution manifold enclosure shall automatically close.

[F] 415.11.8 Manual fire alarm system. An *approved* manual *fire alarm* system shall be provided throughout buildings containing Group H-5. Activation of the alarm system shall initiate a local alarm and transmit a signal to the emergency control station. The *fire alarm* system shall be designed and installed in accordance with Section 907.

[F] 415.11.9 Emergency control station. An emergency control station shall be provided in accordance with Sections 415.11.9.1 through 415.11.9.3.

[F] 415.11.9.1 Location. The emergency control station shall be located on the premises at an *approved* location outside the *fabrication area.*

[F] 415.11.9.2 Staffing. Trained personnel shall continuously staff the emergency control station.

[F] 415.11.9.3 Signals. The emergency control station shall receive signals from emergency equipment and alarm and detection systems. Such emergency equipment and alarm and detection systems shall include, but not be limited to, the following where such equipment or systems are required to be provided either in this chapter or elsewhere in this code:

1. *Automatic sprinkler system* alarm and monitoring systems.
2. Manual *fire alarm* systems.
3. *Emergency alarm systems.*
4. *Continuous gas detection systems.*
5. Smoke detection systems.
6. Emergency power system.
7. Automatic detection and alarm systems for pyrophoric liquids and Class 3 water-reactive liquids required in Section 2705.2.3.4 of the *International Fire Code.*
8. Exhaust *ventilation* flow alarm devices for pyrophoric liquids and Class 3 water-reactive liquids cabinet exhaust *ventilation* systems required in Section 2705.2.3.4 of the *International Fire Code.*

[F] 415.11.10 Emergency power system. An emergency power system shall be provided in Group H-5 occupancies in accordance with Section 2702. The emergency power system shall supply power automatically to the electrical systems specified in Section 415.11.10.1 when the normal electrical supply system is interrupted.

[F] 415.11.10.1 Required electrical systems. Emergency power shall be provided for electrically operated equipment and connected control circuits for the following systems:

1. HPM exhaust *ventilation* systems.
2. HPM gas cabinet *ventilation* systems.
3. HPM exhausted enclosure *ventilation* systems.
4. HPM gas room *ventilation* systems.
5. HPM gas detection systems.
6. *Emergency alarm systems.*
7. Manual and automatic *fire alarm* systems.
8. *Automatic sprinkler system* monitoring and alarm systems.
9. Automatic alarm and detection systems for pyrophoric liquids and Class 3 water-reactive liquids required in Section 2705.2.3.4 of the *International Fire Code.*
10. Flow alarm switches for pyrophoric liquids and Class 3 water-reactive liquids cabinet exhaust *ventilation* systems required in Section 2705.2.3.4 of the *International Fire Code.*
11. Electrically operated systems required elsewhere in this code or in the *International Fire Code* applicable to the use, storage or handling of HPM.

[F] 415.11.10.2 Exhaust ventilation systems. Exhaust *ventilation* systems are allowed to be designed to operate at not less than one-half the normal fan speed on the emergency power system where it is demonstrated that the level of exhaust will maintain a safe atmosphere.

[F] 415.11.11 Automatic sprinkler system protection in exhaust ducts for HPM. An *approved automatic sprinkler system* shall be provided in exhaust ducts conveying gases, vapors, fumes, mists or dusts generated from HPM in accordance with Sections 415.11.11.1 through 415.10.11.3 and the *International Mechanical Code.*

[F] 415.11.11.1 Metallic and noncombustible nonmetallic exhaust ducts. An *approved automatic sprinkler system* shall be provided in metallic and noncombustible nonmetallic exhaust ducts where all of the following conditions apply:

1. Where the largest cross-sectional diameter is equal to or greater than 10 inches (254 mm).
2. The ducts are within the building.
3. The ducts are conveying flammable gases, vapors or fumes.

[F] 415.11.11.2 Combustible nonmetallic exhaust ducts. *Automatic sprinkler system* protection shall be provided in combustible nonmetallic exhaust ducts where the largest cross-sectional diameter of the duct is equal to or greater than 10 inches (254 mm).

Exception: Ducts need not be provided with automatic sprinkler protection as follows:

1. Ducts *listed* or *approved* for applications without *automatic sprinkler system* protection.

2. Ducts not more than 12 feet (3658 mm) in length installed below ceiling level.

[F] 415.11.11.3 Automatic sprinkler locations. Sprinkler systems shall be installed at 12-foot (3658 mm) intervals in horizontal ducts and at changes in direction. In vertical ducts, sprinklers shall be installed at the top and at alternate floor levels.

SECTION 416
APPLICATION OF FLAMMABLE FINISHES

[F] 416.1 General. The provisions of this section shall apply to the construction, installation and use of buildings and structures, or parts thereof, for the application of flammable finishes. Such construction and equipment shall comply with the *International Fire Code*.

[F] 416.2 Spray rooms. Spray rooms shall be enclosed with not less than 1-hour *fire barriers* constructed in accordance with Section 707 or *horizontal assemblies* constructed in accordance with Section 711, or both. Floors shall be waterproofed and drained in an *approved* manner.

[F] 416.2.1 Surfaces. The interior surfaces of spray rooms shall be smooth and shall be so constructed to permit the free passage of exhaust air from all parts of the interior and to facilitate washing and cleaning, and shall be so designed to confine residues within the room. Aluminum shall not be used.

[F] 416.2.2 Ventilation. Mechanical *ventilation* and interlocks with the spraying operation shall be in accordance with the *International Mechanical Code*.

[F] 416.3 Spraying spaces. Spraying spaces shall be ventilated with an exhaust system to prevent the accumulation of flammable mist or vapors in accordance with the *International Mechanical Code*. Where such spaces are not separately enclosed, noncombustible spray curtains shall be provided to restrict the spread of flammable vapors.

[F] 416.3.1 Surfaces. The interior surfaces of spraying spaces shall be smooth and continuous without edges; shall be so constructed to permit the free passage of exhaust air from all parts of the interior and to facilitate washing and cleaning; and shall be so designed to confine residues within the spraying space. Aluminum shall not be used.

[F] 416.4 Spray booths. Spray booths shall be designed, constructed and operated in accordance with the *International Fire Code*

[F] 416.5 Fire protection. An *automatic sprinkler system* or *fire-extinguishing system* shall be provided in all spray, dip and immersing spaces and storage rooms and shall be installed in accordance with Chapter 9.

SECTION 417
DRYING ROOMS

[F] 417.1 General. A drying room or dry kiln installed within a building shall be constructed entirely of *approved* noncombustible materials or assemblies of such materials regulated by the *approved* rules or as required in the general and specific sections of this chapter for special occupancies and where applicable to the general requirements of the *International Mechanical Code*.

[F] 417.2 Piping clearance. Overhead heating pipes shall have a clearance of not less than 2 inches (51 mm) from combustible contents in the dryer.

[F] 417.3 Insulation. Where the operating temperature of the dryer is 175°F (79°C) or more, metal enclosures shall be insulated from adjacent combustible materials by not less than 12 inches (305 mm) of airspace, or the metal walls shall be lined with $^1/_4$-inch (6.4 mm) insulating mill board or other *approved* equivalent insulation.

[F] 417.4 Fire protection. Drying rooms designed for high-hazard materials and processes, including special occupancies as provided for in Chapter 4, shall be protected by an *approved automatic fire-extinguishing system* complying with the provisions of Chapter 9.

SECTION 418
ORGANIC COATINGS

[F] 418.1 Building features. Manufacturing of organic coatings shall be done only in buildings that do not have pits or *basements*.

[F] 418.2 Location. Organic coating manufacturing operations and operations incidental to or connected therewith shall not be located in buildings having other occupancies.

[F] 418.3 Process mills. Mills operating with close clearances and that process flammable and heat-sensitive materials, such as nitrocellulose, shall be located in a *detached building* or noncombustible structure.

[F] 418.4 Tank storage. Storage areas for flammable and combustible liquid tanks inside of structures shall be located at or above grade and shall be separated from the processing area by not less than 2-hour *fire barriers* constructed in accordance with Section 707 or *horizontal assemblies* constructed in accordance with Section 711, or both.

[F] 418.5 Nitrocellulose storage. Nitrocellulose storage shall be located on a detached pad or in a separate structure or a room enclosed with not less than 2-hour *fire barriers* constructed in accordance with Section 707 or *horizontal assemblies* constructed in accordance with Section 711, or both.

[F] 418.6 Finished products. Storage rooms for finished products that are flammable or combustible liquids shall be separated from the processing area by not less than 2-hour *fire barriers* constructed in accordance with Section 707 or *horizontal assemblies* constructed in accordance with Section 711, or both.

SECTION 419
LIVE/WORK UNITS

419.1 General. A *live/work unit* shall comply with Sections 419.1 through 419.9.

Exception: Dwelling or sleeping units that include an office that is less than 10 percent of the area of the *dwell-*

ing unit are permitted to be classified as *dwelling units* with accessory occupancies in accordance with Section 508.2.

419.1.1 Limitations. The following shall apply to all live/work areas:

1. The *live/work unit* is permitted to be not greater than 3,000 square feet (279 m^2) in area;
2. The nonresidential area is permitted to be not more than 50 percent of the area of each *live/work unit*;
3. The nonresidential area function shall be limited to the first or main floor only of the *live/work unit*; and
4. Not more than five nonresidential workers or employees are allowed to occupy the nonresidential area at any one time.

419.2 Occupancies. *Live/work units* shall be classified as a Group R-2 occupancy. Separation requirements found in Sections 420 and 508 shall not apply within the *live/work unit* where the *live/work unit* is in compliance with Section 419. Nonresidential uses that would otherwise be classified as either a Group H or S occupancy shall not be permitted in a *live/work unit.*

Exception: Storage shall be permitted in the *live/work unit* provided the aggregate area of storage in the nonresidential portion of the *live/work unit* shall be limited to 10 percent of the space dedicated to nonresidential activities.

419.3 Means of egress. Except as modified by this section, the *means of egress* components for a *live/work unit* shall be designed in accordance with Chapter 10 for the function served.

419.3.1 Egress capacity. The egress capacity for each element of the *live/work unit* shall be based on the occupant load for the function served in accordance with Table 1004.1.2.

419.3.2 Spiral stairways. *Spiral stairways* that conform to the requirements of Section 1011.10 shall be permitted.

419.4 Vertical openings. Floor openings between floor levels of a *live/work unit* are permitted without enclosure.

[F] 419.5 Fire protection. The *live/work unit* shall be provided with a monitored *fire alarm* system where required by Section 907.2.9 and an *automatic sprinkler system* in accordance with Section 903.2.8.

419.6 Structural. Floors within a *live/work unit* shall be designed for the live loads in Table 1607.1, based on the function within the space.

419.7 Accessibility. Accessibility shall be designed in accordance with Chapter 11 for the function served.

419.8 Ventilation. The applicable *ventilation* requirements of the *International Mechanical Code* shall apply to each area within the *live/work unit* for the function within that space.

419.9 Plumbing facilities. The nonresidential area of the *live/work unit* shall be provided with minimum plumbing facilities as specified by Chapter 29, based on the function of the nonresidential area. Where the nonresidential area of the *live/work unit* is required to be *accessible* by Section 1103.2.13, the plumbing fixtures specified by Chapter 29 shall be *accessible*.

SECTION 420
GROUPS I-1, R-1, R-2, R-3 AND R-4

420.1 General. Occupancies in Groups I-1, R-1, R-2, R-3 and R-4 shall comply with the provisions of Sections 420.1 through 420.6 and other applicable provisions of this code.

420.2 Separation walls. Walls separating *dwelling units* in the same building, walls separating *sleeping units* in the same building and walls separating *dwelling* or *sleeping units* from other occupancies contiguous to them in the same building shall be constructed as *fire partitions* in accordance with Section 708.

420.3 Horizontal separation. Floor assemblies separating *dwelling units* in the same buildings, floor assemblies separating *sleeping units* in the same building and floor assemblies separating *dwelling* or *sleeping units* from other occupancies contiguous to them in the same building shall be constructed as *horizontal assemblies* in accordance with Section 711.

420.4 Smoke barriers in Group I-1, Condition 2. Smoke barriers shall be provided in Group I-1, Condition 2, to subdivide every story used by persons receiving care, treatment or sleeping and to provide other stories with an occupant load of 50 or more persons, into no fewer than two smoke compartments. Such stories shall be divided into smoke compartments with an area of not more than 22,500 square feet (2092 m^2) and the distance of travel from any point in a smoke compartment to a smoke barrier door shall not exceed 200 feet (60 960 mm). The smoke barrier shall be in accordance with Section 709.

420.4.1 Refuge area. Refuge areas shall be provided within each smoke compartment. The size of the refuge area shall accommodate the occupants and care recipients from the adjoining smoke compartment. Where a smoke compartment is adjoined by two or more smoke compartments, the minimum area of the refuge area shall accommodate the largest occupant load of the adjoining compartments. The size of the refuge area shall provide the following:

1. Not less than 15 net square feet (1.4 m^2) for each care recipient.
2. Not less than 6 net square feet (0.56 m^2) for other occupants.

Areas or spaces permitted to be included in the calculation of the refuge area are corridors, lounge or dining areas and other low-hazard areas.

[F] 420.5 Automatic sprinkler system. Group R occupancies shall be equipped throughout with an *automatic sprinkler system* in accordance with Section 903.2.8. Group I-1 occupancies shall be equipped throughout with an *automatic sprinkler system* in accordance with Section 903.2.6. Quick-response or residential automatic sprinklers shall be installed in accordance with Section 903.3.2.

[F] 420.6 Fire alarm systems and smoke alarms. Fire alarm systems and smoke alarms shall be provided in Group I-1, R-1, R-2 and R-4 occupancies in accordance with Sections 907.2.6, 907.2.8, 907.2.9 and 907.2.10, respectively. Single- or multiple- station smoke alarms shall be provided in Groups I-1, R-2, R-3 and R-4 in accordance with Section 907.2.11.

SECTION 421
HYDROGEN FUEL GAS ROOMS

[F] 421.1 General. Where required by the *International Fire Code*, hydrogen fuel gas rooms shall be designed and constructed in accordance with Sections 421.1 through 421.7.

[F] 421.2 Definitions. The following terms are defined in Chapter 2:

GASEOUS HYDROGEN SYSTEM.

HYDROGEN FUEL GAS ROOM.

[F] 421.3 Location. Hydrogen fuel gas rooms shall not be located below grade.

[F] 421.4 Design and construction. Hydrogen fuel gas rooms not classified as Group H shall be separated from other areas of the building in accordance with Section 509.1.

[F] 421.4.1 Pressure control. Hydrogen fuel gas rooms shall be provided with a ventilation system designed to maintain the room at a negative pressure in relation to surrounding rooms and spaces.

[F] 421.4.2 Windows. Operable windows in interior walls shall not be permitted. Fixed windows shall be permitted where in accordance with Section 716.

[F] 421.5 Exhaust ventilation. Hydrogen fuel gas rooms shall be provided with mechanical exhaust ventilation in accordance with the applicable provisions of Section 502.16.1 of the *International Mechanical Code*.

[F] 421.6 Gas detection system. Hydrogen fuel gas rooms shall be provided with an approved flammable gas detection system in accordance with Sections 421.6.1 through 421.6.4.

[F] 421.6.1 System design. The flammable gas detection system shall be listed for use with hydrogen and any other flammable gases used in the hydrogen fuel gas room. The gas detection system shall be designed to activate when the level of flammable gas exceeds 25 percent of the lower flammability limit (LFL) for the gas or mixtures present at their anticipated temperature and pressure.

[F] 421.6.2 Gas detection system components. Gas detection system control units shall be listed and labeled in accordance with UL 864 or UL 2017. Gas detectors shall be listed and labeled in accordance with UL 2075 for use with the gases and vapors being detected.

[F] 421.6.3 Operation. Activation of the gas detection system shall result in all of the following:

1. Initiation of distinct audible and visual alarm signals both inside and outside of the hydrogen fuel gas room.
2. Activation of the mechanical exhaust ventilation system.

[F] 421.6.4 Failure of the gas detection system. Failure of the gas detection system shall result in activation of the mechanical exhaust ventilation system, cessation of hydrogen generation and the sounding of a trouble signal in an approved location.

[F] 421.7 Explosion control. Explosion control shall be provided where required by Section 414.5.1.

[F] 421.8 Standby power. Mechanical *ventilation* and gas detection systems shall be provided with a standby power system in accordance with Section 2702.

SECTION 422
AMBULATORY CARE FACIILITIES

422.1 General. Occupancies classified as *ambulatory care facilities* shall comply with the provisions of Sections 422.1 through 422.5 and other applicable provisions of this code.

422.2 Separation. *Ambulatory care facilities* where the potential for four or more care recipients are to be *incapable of self-preservation* at any time, whether rendered incapable by staff or staff accepted responsibility for a care recipient already incapable, shall be separated from adjacent spaces, *corridors* or tenants with a *fire partition* installed in accordance with Section 708.

422.3 Smoke compartments. Where the aggregate area of one or more *ambulatory care facilities* is greater than 10,000 square feet (929 m^2) on one *story*, the *story* shall be provided with a *smoke barrier* to subdivide the *story* into no fewer than two *smoke compartments*. The area of any one such *smoke compartment* shall be not greater than 22,500 square feet (2092 m^2). The distance of travel from any point in a *smoke compartment* to a *smoke barrier* door shall be not greater than 200 feet (60 960 mm). The *smoke barrier* shall be installed in accordance with Section 709 with the exception that *smoke barriers* shall be continuous from outside wall to an outside wall, a floor to a floor, or from a *smoke barrier* to a *smoke barrier* or a combination thereof.

422.3.1 Means of egress. Where ambulatory care facilities require smoke compartmentation in accordance with Section 422.3, the fire safety evacuation plans provided in accordance with Section 1001.4 shall identify the building components necessary to support a *defend-in-place* emergency response in accordance with Sections 404 and 408 of the *International Fire Code*.

422.3.2 Refuge area. Not less than 30 net square feet (2.8 m^2) for each nonambulatory care recipient shall be provided within the aggregate area of *corridors*, care recipient rooms, treatment rooms, lounge or dining areas and other low-hazard areas within each *smoke compartment*. Each occupant of an *ambulatory care facility* shall be provided with access to a refuge area without passing through or utilizing adjacent tenant spaces.

422.3.3 Independent egress. A *means of egress* shall be provided from each *smoke compartment* created by smoke barriers without having to return through the *smoke compartment* from which *means of egress* originated.

[F] 422.4 Automatic sprinkler systems. *Automatic sprinkler systems* shall be provided for *ambulatory care facilities* in accordance with Section 903.2.2.

[F] 422.5 Fire alarm systems. A *fire alarm* system shall be provided for *ambulatory care facilities* in accordance with Section 907.2.2.

SECTION 423
STORM SHELTERS

423.1 General. In addition to other applicable requirements in this code, storm shelters shall be constructed in accordance with ICC 500.

423.1.1 Scope. This section applies to the construction of storm shelters constructed as separate detached buildings or constructed as safe rooms within buildings for the purpose of providing safe refuge from storms that produce high winds, such as tornados and hurricanes. Such structures shall be designated to be hurricane shelters, tornado shelters, or combined hurricane and tornado shelters.

423.2 Definitions. The following terms are defined in Chapter 2:

STORM SHELTER.

Community storm shelter.

Residential storm shelter.

423.3 Critical emergency operations. In areas where the shelter design wind speed for tornados in accordance with Figure 304.2(1) of ICC 500 is 250 MPH, 911 call stations, emergency operation centers and fire, rescue, ambulance and police stations shall have a storm shelter constructed in accordance with ICC 500.

Exception: Buildings meeting the requirements for shelter design in ICC 500.

423.4 Group E occupancies. In areas where the shelter design wind speed for tornados is 250 MPH in accordance with Figure 304.2(1) of ICC 500, all Group E occupancies with an aggregate occupant load of 50 or more shall have a storm shelter constructed in accordance with ICC 500. The shelter shall be capable of housing the total occupant load of the Group E occupancy.

Exceptions:

1. Group E day care facilities.
2. Group E occupancies accessory to places of religious worship.
3. Buildings meeting the requirements for shelter design in ICC 500.

SECTION 424
CHILDREN'S PLAY STRUCTURES

424.1 Children's play structures. Children's play structures installed inside all occupancies covered by this code that exceed 10 feet (3048 mm) in height and 150 square feet (14 m2) in area shall comply with Sections 424.2 through 424.5.

424.2 Materials. Children's play structures shall be constructed of noncombustible materials or of combustible materials that comply with the following:

1. *Fire-retardant-treated* wood complying with Section 2303.2.
2. Light-transmitting plastics complying with Section 2606.
3. Foam plastics (including the pipe foam used in soft-contained play equipment structures) having a maximum heat-release rate not greater than 100 kilowatts when tested in accordance with UL 1975 or when tested in accordance with NFPA 289, using the 20 kW ignition source.
4. Aluminum composite material (ACM) meeting the requirements of Class A *interior finish* in accordance with Chapter 8 when tested as an assembly in the maximum thickness intended for use.
5. Textiles and films complying with the fire propagation performance criteria contained in Test Method 1 or Test Method 2, as appropriate, of NFPA 701.
6. Plastic materials used to construct rigid components of soft-contained play equipment structures (such as tubes, windows, panels, junction boxes, pipes, slides and decks) exhibiting a peak rate of heat release not exceeding 400 kW/ m^2 when tested in accordance with ASTM E 1354 at an incident heat flux of 50 kW/m^2 in the horizontal orientation at a thickness of 6 mm.
7. Ball pool balls, used in soft-contained play equipment structures, having a maximum heat-release rate not greater than 100 kilowatts when tested in accordance with UL 1975 or when tested in accordance with NFPA 289, using the 20 kW ignition source. The minimum specimen test size shall be 36 inches by 36 inches (914 mm by 914 mm) by an average of 21 inches (533 mm) deep, and the balls shall be held in a box constructed of galvanized steel poultry netting wire mesh.
8. Foam plastics shall be covered by a fabric, coating or film meeting the fire propagation performance criteria contained in Test Method 1 or Test Method 2, as appropriate, of NFPA 701.
9. The floor covering placed under the children's play structure shall exhibit a Class I interior floor finish classification, as described in Section 804, when tested in accordance with NFPA 253.

[F] 424.3 Fire protection. Children's play structures shall be provided with the same level of *approved* fire suppression

and detection devices required for other structures in the same occupancy.

424.4 Separation. Children's play structures shall have a horizontal separation from building walls, partitions and from elements of the *means of egress* of not less than 5 feet (1524 mm). Children's playground structures shall have a horizontal separation from other children's play structures of not less than 20 feet (6090 mm).

424.5 Area limits. Children's play structures shall be not greater than 300 square feet (28 m^2) in area, unless a special investigation, acceptable to the building official, has demonstrated adequate fire safety.

** SECTION 425 HYPERBARIC FACILITIES

425.1 Hyperbaric facilities. Hyperbaric facilities shall meet the requirements contained in Chapter 20 of NFPA 99.

** SECTION [F] 426 COMBUSTIBLE DUSTS, GRAIN PROCESSING AND STORAGE

426.1 Combustible dusts, grain processing and storage. The provisions of Sections 426.1.1 through 426.1.7 shall apply to buildings in which materials that produce combustible dusts are stored or handled. Buildings that store or handle combustible dusts shall comply with the applicable provisions of NFPA 61, NFPA 85, NFPA 120, NFPA 484, NFPA 654, NFPA 655 and NFPA 664 and the *International Fire Code*.

[F] 426.1.1 Type of construction and height exceptions. Buildings shall be constructed in compliance with the height, number of stories and area limitations specified in Sections 504 and 506; except that where erected of Type I or II construction, the heights and areas of grain elevators and similar structures shall be unlimited, and where of Type IV construction, the maximum building height shall be 65 feet (19 812 mm) and except further that, in isolated areas, the maximum building height of Type IV structures shall be increased to 85 feet (25 908 mm).

[F] 426.1.2 Grinding rooms. Every room or space occupied for grinding or other operations that produce combustible dusts in such a manner that the room or space is classified as a Group H-2 occupancy shall be enclosed with fire barriers constructed in accordance with Section 707 or horizontal assemblies constructed in accordance with Section 711, or both. The fire-resistance rating of the enclosure shall be not less than 2 hours where the area is not more than 3,000 square feet (279 m^2), and not less than 4 hours where the area is greater than 3,000 square feet (279 m^2).

[F] 426.1.3 Conveyors. Conveyors, chutes, piping and similar equipment passing through the enclosures of rooms or spaces shall be constructed dirt tight and vapor tight, and be of *approved* noncombustible materials complying with Chapter 30.

[F] 426.1.4 Explosion control. Explosion control shall be provided as specified in the *International Fire Code,* or spaces shall be equipped with the equivalent mechanical *ventilation* complying with the *International Mechanical Code.*

[F] 426.1.5 Grain elevators. Grain elevators, malt houses and buildings for similar occupancies shall not be located within 30 feet (9144 mm) of interior *lot lines* or structures on the same *lot*, except where erected along a railroad right-of-way.

[F] 426.1.6 Coal pockets. Coal pockets located less than 30 feet (9144 mm) from interior lot lines or from structures on the same lot shall be constructed of not less than Type IB construction. Where more than 30 feet (9144 mm) from interior *lot lines*, or where erected along a railroad right-of-way, the minimum type of construction of such structures not more than 65 feet (19 812 mm) in *building height* shall be Type IV.

[F] 426.1.7 Tire rebuilding. Buffing operations shall be located in a room separated from the remainder of the building housing the tire rebuilding or tire recapping operation by a 1-hour *fire barrier.*

Exception: Buffing operations are not required to be separated where all of the following conditions are met:

1. Buffing operations are equipped with an *approved* continuous automatic water-spray system directed at the point of cutting action;
2. Buffing machines are connected to particle-collecting systems providing a minimum air movement of 1,500 cubic feet per minute (cfm) (0.71 $m^3/_s$) in volume and 4,500 feet per minute (fpm) (23 m/s) in-line velocity; and
3. The collecting system shall discharge the rubber particles to an *approved* outdoor noncombustible or fire-resistant container, which is emptied at frequent intervals to prevent overflow.

CHAPTER 5

GENERAL BUILDING HEIGHTS AND AREAS

User note: Code change proposals to sections preceded by the designation [F] will be considered by the International Fire Code Development Committee during the 2016 (Group B) Code Development Cycle. See explanation on page iv.

SECTION 501
GENERAL

501.1 Scope. The provisions of this chapter control the height and area of structures hereafter erected and *additions* to existing structures.

[F] 501.2 Address identification. New and existing buildings shall be provided with *approved* address identification. The address identification shall be legible and placed in a position that is visible from the street or road fronting the property. Address identification characters shall contrast with their background. Address numbers shall be Arabic numbers or alphabetical letters. Numbers shall not be spelled out. Each character shall be a minimum of 4 inches (102 mm) high with a minimum stroke width of $^1/_2$ inch (12.7 mm). Where required by the fire *code official*, address identification shall be provided in additional approved locations to facilitate emergency response. Where access is by means of a private road and the building address cannot be viewed from the public way, a monument, pole or other approved sign or means shall be used to identify the structure. Address identification shall be maintained.

SECTION 502
DEFINITIONS

502.1 Definitions. The following terms are defined in Chapter 2:

AREA, BUILDING.

BASEMENT.

EQUIPMENT PLATFORM.

GRADE PLANE.

HEIGHT, BUILDING.

MEZZANINE.

SECTION 503
GENERAL BUILDING HEIGHT AND AREA LIMITATIONS

503.1 General. Unless otherwise specifically modified in Chapter 4 and this chapter, *building height*, number of stories and *building area* shall not exceed the limits specified in Sections 504 and 506 based on the type of construction as determined by Section 602 and the occupancies as determined by Section 302 except as modified hereafter. *Building height*, number of stories and *building* area provisions shall be applied independently. Each portion of a building separated by one or more *fire walls* complying with Section 706 shall be considered to be a separate building.

503.1.1 Special industrial occupancies. Buildings and structures designed to house special industrial processes that require large areas and unusual *building heights* to accommodate craneways or special machinery and equipment, including, among others, rolling mills; structural metal fabrication shops and foundries; or the production and distribution of electric, gas or steam power, shall be exempt from the *building height*, number of stories and *building area* limitations specified in Sections 504 and 506.

503.1.2 Buildings on same lot. Two or more buildings on the same lot shall be regulated as separate buildings or shall be considered as portions of one building where the *building height*, number of stories of each building and the aggregate *building area* of the buildings are within the limitations specified in Sections 504 and 506. The provisions of this code applicable to the aggregate building shall be applicable to each building.

503.1.3 Type I construction. Buildings of Type I construction permitted to be of unlimited tabular *building heights and areas* are not subject to the special requirements that allow unlimited area buildings in Section 507 or unlimited *building height* in Sections 503.1.1 and 504.3 or increased *building heights and areas* for other types of construction.

SECTION 504
BUILDING HEIGHT AND NUMBER OF STORIES

504.1 General. The height, in feet, and the number of stories of a building shall be determined based on the type of construction, occupancy classification and whether there is an *automatic sprinkler system* installed throughout the building.

Exception: The *building height* of one-*story* aircraft hangars, aircraft paint hangars and buildings used for the manufacturing of aircraft shall not be limited where the building is provided with an *automatic sprinkler system* or *automatic fire-extinguishing system* in accordance with Chapter 9 and is entirely surrounded by *public ways* or *yards* not less in width than one and one-half times the *building height*.

504.1.1 Unlimited area buildings. The height of unlimited area buildings shall be designed in accordance with Section 507.

504.1.2 Special provisions. The special provisions of Section 510 permit the use of special conditions that are

exempt from, or modify, the specific requirements of this chapter regarding the allowable heights of buildings based on the occupancy classification and type of construction, provided the special condition complies with the provisions specified in Section 510.

504.2 Mixed occupancy. In a building containing mixed occupancies in accordance with Section 508, no individual occupancy shall exceed the height and number of story limits specified in this section for the applicable occupancies.

504.3 Height in feet. The maximum height, in feet, of a building shall not exceed the limits specified in Table 504.3.

Exception: Towers, spires, steeples and other roof structures shall be constructed of materials consistent with the required type of construction of the building except where other construction is permitted by Section 1510.2.5. Such structures shall not be used for habitation or storage. The structures shall be unlimited in height where of noncombustible materials and shall not extend more than 20 feet (6096 mm) above the allowable building height where of combustible materials (see Chapter 15 for additional requirements).

504.4 Number of stories. The maximum number of stories of a building shall not exceed the limits specified in Table 504.4.

SECTION 505
MEZZANINES AND EQUIPMENT PLATFORMS

505.1 General. *Mezzanines* shall comply with Section 505.2. *Equipment platforms* shall comply with Section 505.3.

505.2 Mezzanines. A *mezzanine* or *mezzanines* in compliance with Section 505.2 shall be considered a portion of the *story* below. Such *mezzanines* shall not contribute to either the *building area* or number of *stories* as regulated by Section 503.1. The area of the *mezzanine* shall be included in determining the *fire area*. The clear height above and below the *mezzanine* floor construction shall be not less than 7 feet (2134 mm).

TABLE 504.3[a]
ALLOWABLE BUILDING HEIGHT IN FEET ABOVE GRADE PLANE

OCCUPANCY CLASSIFICATION	TYPE OF CONSTRUCTION										
	SEE FOOTNOTES	TYPE I		TYPE II		TYPE III		TYPE IV	TYPE V	
		A	B	A	B	A	B	HT	A	B
A, B, E, F, M, S, U	NS[b]	UL	160	65	55	65	55	65	50	40
	S	UL	180	85	75	85	75	85	70	60
H-1, H-2, H-3, H-5	NS[c, d]	UL	160	65	55	65	55	65	50	40
	S									
H-4	NS[c, d]	UL	160	65	55	65	55	65	50	40
	S	UL	180	85	75	85	75	85	70	60
I-1 Condition 1, I-3	NS[d, e]	UL	160	65	55	65	55	65	50	40
	S	UL	180	85	75	85	75	85	70	60
I-1 Condition 2, I-2	NS[d, f, e]	UL	160	65	55	65	55	65	50	40
	S	UL	180	85						
I-4	NS[d, g]	UL	160	65	55	65	55	65	50	40
	S	UL	180	85	75	85	75	85	70	60
R	NS[d, h]	UL	160	65	55	65	55	65	50	40
	S13R	60	60	60	60	60	60	60	60	60
	S	UL	180	85	75	85	75	85	70	60

For SI: 1 foot = 304.8 mm.

Note: UL = Unlimited; NS = Buildings not equipped throughout with an automatic sprinkler system; S = Buildings equipped throughout with an automatic sprinkler system installed in accordance with Section 903.3.1.1; S13R = Buildings equipped throughout with an automatic sprinkler system installed in accordance with Section 903.3.1.2.

a. See Chapters 4 and 5 for specific exceptions to the allowable height in this chapter.

b. See Section 903.2 for the minimum thresholds for protection by an automatic sprinkler system for specific occupancies.

c. New Group H occupancies are required to be protected by an automatic sprinkler system in accordance with Section 903.2.5.

d. The NS value is only for use in evaluation of existing building height in accordance with the *International Existing Building Code*.

e. New Group I-1 and I-3 occupancies are required to be protected by an automatic sprinkler system in accordance with Section 903.2.6. For new Group I-1 occupancies Condition 1, see Exception 1 of Section 903.2.6.

f. New and existing Group I-2 occupancies are required to be protected by an automatic sprinkler system in accordance with Section 903.2.6 and Section 1103.5 of the *International Fire Code*.

g. For new Group I-4 occupancies, see Exceptions 2 and 3 of Section 903.2.6.

h. New Group R occupancies are required to be protected by an automatic sprinkler system in accordance with Section 903.2.8.

TABLE 504.4[a, b]
ALLOWABLE NUMBER OF STORIES ABOVE GRADE PLANE

OCCUPANCY CLASSIFICATION	TYPE OF CONSTRUCTION									
	SEE FOOTNOTES	TYPE I		TYPE II		TYPE III		TYPE IV	TYPE V	
		A	B	A	B	A	B	HT	A	B
A-1	NS	UL	5	3	2	3	2	3	2	1
	S	UL	6	4	3	4	3	4	3	2
A-2	NS	UL	11	3	2	3	2	3	2	1
	S	UL	12	4	3	4	3	4	3	2
A-3	NS	UL	11	3	2	3	2	3	2	1
	S	UL	12	4	3	4	3	4	3	2
A-4	NS	UL	11	3	2	3	2	3	2	1
	S	UL	12	4	3	4	3	4	3	2
A-5	NS	UL	UL	UL	UL	UL	UL	UL	UL	UL
	S	UL	UL	UL	UL	UL	UL	UL	UL	UL
B	NS	UL	11	5	3	5	3	5	3	2
	S	UL	12	6	4	6	4	6	4	3
E	NS	UL	5	3	2	3	2	3	1	1
	S	UL	6	4	3	4	3	4	2	2
F-1	NS	UL	11	4	2	3	2	4	2	1
	S	UL	12	5	3	4	3	5	3	2
F-2	NS	UL	11	5	3	4	3	5	3	2
	S	UL	12	6	4	5	4	6	4	3
H-1	NS[c, d]	1	1	1	1	1	1	1	1	NP
	S									
H-2	NS[c, d]	UL	3	2	1	2	1	2	1	1
	S									
H-3	NS[c, d]	UL	6	4	2	4	2	4	2	1
	S									
H-4	NS[c, d]	UL	7	5	3	5	3	5	3	2
	S	UL	8	6	4	6	4	6	4	3
H-5	NS[c, d]	4	4	3	3	3	3	3	3	2
	S									
I-1 Condition 1	NS[d, e]	UL	9	4	3	4	3	4	3	2
	S	UL	10	5	4	5	4	5	4	3
I-1 Condition 2	NS[d, e]	UL	9	4	3	4	3	4	3	2
	S	UL	10	5						
I-2	NS[d, f]	UL	4	2	1	1	NP	1	1	NP
	S	UL	5	3						
I-3	NS[d, e]	UL	4	2	1	2	1	2	2	1
	S	UL	5	3	2	3	2	3	3	2
I-4	NS[d, g]	UL	5	3	2	3	2	3	1	1
	S	UL	6	4	3	4	3	4	2	2
M	NS	UL	11	4	2	4	2	4	3	1
	S	UL	12	5	3	5	3	5	4	2

(continued)

TABLE 504.4[a, b]—continued
ALLOWABLE NUMBER OF STORIES ABOVE GRADE PLANE

OCCUPANCY CLASSIFICATION	TYPE OF CONSTRUCTION									
	SEE FOOTNOTES	TYPE I		TYPE II		TYPE III		TYPE IV	TYPE V	
		A	B	A	B	A	B	HT	A	B
R-1	NS[d, h]	UL	11	4	4	4	4	4	3	2
	S13R	4	4						4	3
	S	UL	12	5	5	5	5	5	4	3
R-2	NS[d, h]	UL	11	4	4	4	4	4	3	2
	S13R	4	4	4					4	3
	S	UL	12	5	5	5	5	5	4	3
R-3	NS[d, h]	UL	11	4	4	4	4	4	3	3
	S13R	4	4						4	4
	S	UL	12	5	5	5	5	5	4	4
R-4	NS[d, h]	UL	11	4	4	4	4	4	3	2
	S13R	4	4						4	3
	S	UL	12	5	5	5	5	5	4	3
S-1	NS	UL	11	4	2	3	2	4	3	1
	S	UL	12	5	3	4	3	5	4	2
S-2	NS	UL	11	5	3	4	3	4	4	2
	S	UL	12	6	4	5	4	5	5	3
U	NS	UL	5	4	2	3	2	4	2	1
	S	UL	6	5	3	4	3	5	3	2

Note: UL = Unlimited; NP = Not Permitted; NS = Buildings not equipped throughout with an automatic sprinkler system; S = Buildings equipped throughout with an automatic sprinkler system installed in accordance with Section 903.3.1.1; S13R = Buildings equipped throughout with an automatic sprinkler system installed in accordance with Section 903.3.1.2.

a. See Chapters 4 and 5 for specific exceptions to the allowable height in this chapter.
b. See Section 903.2 for the minimum thresholds for protection by an automatic sprinkler system for specific occupancies.
c. New Group H occupancies are required to be protected by an automatic sprinkler system in accordance with Section 903.2.5.
d. The NS value is only for use in evaluation of existing building height in accordance with the *International Existing Building Code*.
e. New Group I-1 and I-3 occupancies are required to be protected by an automatic sprinkler system in accordance with Section 903.2.6. For new Group I-1 occupancies, Condition 1, see Exception 1 of Section 903.2.6.
f. New and existing Group I-2 occupancies are required to be protected by an automatic sprinkler system in accordance with Section 903.2.6 and Section 1103.5 of the *International Fire Code*.
g. For new Group I-4 occupancies, see Exceptions 2 and 3 of Section 903.2.6.
h. New Group R occupancies are required to be protected by an automatic sprinkler system in accordance with Section 903.2.8.

505.2.1 Area limitation. The aggregate area of a *mezzanine* or *mezzanines* within a room shall be not greater than one-third of the floor area of that room or space in which they are located. The enclosed portion of a room shall not be included in a determination of the floor area of the room in which the *mezzanine* is located. In determining the allowable *mezzanine* area, the area of the *mezzanine* shall not be included in the floor area of the room.

Where a room contains both a *mezzanine* and an *equipment platform*, the aggregate area of the two raised floor levels shall be not greater than two-thirds of the floor area of that room or space in which they are located.

Exceptions:

1. The aggregate area of *mezzanines* in buildings and structures of Type I or II construction for special industrial occupancies in accordance with Section 503.1.1 shall be not greater than two-thirds of the floor area of the room.
2. The aggregate area of *mezzanines* in buildings and structures of Type I or II construction shall be not greater than one-half of the floor area of the room in buildings and structures equipped throughout with an *approved automatic sprinkler system* in accordance with Section 903.3.1.1 and an *approved emergency voice/alarm communication system* in accordance with Section 907.5.2.2.

505.2.2 Means of egress. The *means of egress* for *mezzanines* shall comply with the applicable provisions of Chapter 10.

505.2.3 Openness. A *mezzanine* shall be open and unobstructed to the room in which such *mezzanine* is located except for walls not more than 42 inches (1067 mm) in height, columns and posts.

Exceptions:

1. *Mezzanines* or portions thereof are not required to be open to the room in which the *mezzanines* are located, provided that the *occupant load* of the aggregate area of the enclosed space is not greater than 10.
2. A *mezzanine* having two or more exits or access to exits is not required to be open to the room in which the *mezzanine* is located.
3. *Mezzanines* or portions thereof are not required to be open to the room in which the *mezzanines* are located, provided that the aggregate floor area of the enclosed space is not greater than 10 percent of the *mezzanine* area.
4. In industrial facilities, *mezzanines* used for control equipment are permitted to be glazed on all sides.
5. In occupancies other than Groups H and I, that are no more than two *stories* above *grade plane* and equipped throughout with an *automatic sprinkler system* in accordance with Section 903.3.1.1, a *mezzanine* having two or more *means of egress* shall not be required to be open to the room in which the *mezzanine* is located.

505.3 Equipment platforms. *Equipment platforms* in buildings shall not be considered as a portion of the floor below. Such *equipment platforms* shall not contribute to either the *building area* or the number of *stories* as regulated by Section 503.1. The area of the *equipment platform* shall not be included in determining the *fire area* in accordance with Section 903. *Equipment platforms* shall not be a part of any *mezzanine* and such platforms and the walkways, *stairs*, *alternating tread devices* and ladders providing access to an *equipment platform* shall not serve as a part of the *means of egress* from the building.

505.3.1 Area limitation. The aggregate area of all *equipment platforms* within a room shall be not greater than two-thirds of the area of the room in which they are located. Where an *equipment platform* is located in the same room as a *mezzanine*, the area of the *mezzanine* shall be determined by Section 505.2.1 and the combined aggregate area of the *equipment platforms* and *mezzanines* shall be not greater than two-thirds of the room in which they are located.

505.3.2 Automatic sprinkler system. Where located in a building that is required to be protected by an *automatic sprinkler system*, *equipment platforms* shall be fully protected by sprinklers above and below the platform, where required by the standards referenced in Section 903.3.

505.3.3 Guards. *Equipment platforms* shall have *guards* where required by Section 1015.2.

SECTION 506
BUILDING AREA

506.1 General. The floor area of a building shall be determined based on the type of construction, occupancy classification, whether there is an automatic sprinkler system installed throughout the building and the amount of building frontage on public way or open space.

506.1.1 Unlimited area buildings. Unlimited area buildings shall be designed in accordance with Section 507.

506.1.2 Special provisions. The special provisions of Section 510 permit the use of special conditions that are exempt from, or modify, the specific requirements of this chapter regarding the allowable areas of buildings based on the occupancy classification and type of construction, provided the special condition complies with the provisions specified in Section 510.

506.1.3 Basements. Basements need not be included in the total allowable floor area of a building provided the total area of such basements does not exceed the area permitted for a one-story above grade plane building.

506.2 Allowable area determination. The allowable area of a building shall be determined in accordance with the applicable provisions of Sections 506.2.1 through 506.2.4 and Section 506.3.

506.2.1 Single-occupancy, one-story buildings. The allowable area of a single-occupancy building with no more than one story above grade plane shall be determined in accordance with Equation 5-1:

$$A_a = A_t + (NS \times I_f) \qquad \textbf{(Equation 5-1)}$$

where:

A_a = Allowable area (square feet).

A_t = Tabular allowable area factor (NS, S1, or S13R value, as applicable) in accordance with Table 506.2.

NS = Tabular allowable area factor in accordance with Table 506.2 for nonsprinklered building (regardless of whether the building is sprinklered).

I_f = Area factor increase due to frontage (percent) as calculated in accordance with Section 506.3.

506.2.2 Mixed-occupancy, one-story buildings. The allowable area of a mixed-occupancy building with no more than one story above grade plane shall be determined in accordance with the applicable provisions of Section 508.1 based on Equation 5-1 for each applicable occupancy.

506.2.2.1 Group H-2 or H-3 mixed occupancies. For a building containing Group H-2 or H-3 occupancies, the allowable area shall be determined in accordance with Section 508.4.2, with the sprinkler system increase applicable only to the portions of the building not classified as Group H-2 or H-3.

TABLE 506.2[a, b]
ALLOWABLE AREA FACTOR (A_t = NS, S1, S13R, or SM, as applicable) IN SQUARE FEET

OCCUPANCY CLASSIFICATION	SEE FOOTNOTES	TYPE OF CONSTRUCTION								
		TYPE I		TYPE II		TYPE III		TYPE IV	TYPE V	
		A	B	A	B	A	B	HT	A	B
A-1	NS	UL	UL	15,500	8,500	14,000	8,500	15,000	11,500	5,500
	S1	UL	UL	62,000	34,000	56,000	34,000	60,000	46,000	22,000
	SM	UL	UL	46,500	25,500	42,000	25,500	45,000	34,500	16,500
A-2	NS	UL	UL	15,500	9,500	14,000	9,500	15,000	11,500	6,000
	S1	UL	UL	62,000	38,000	56,000	38,000	60,000	46,000	24,000
	SM	UL	UL	46,500	28,500	42,000	28,500	45,000	34,500	18,000
A-3	NS	UL	UL	15,500	9,500	14,000	9,500	15,000	11,500	6,000
	S1	UL	UL	62,000	38,000	56,000	38,000	60,000	46,000	24,000
	SM	UL	UL	46,500	28,500	42,000	28,500	45,000	34,500	18,000
A-4	NS	UL	UL	15,500	9,500	14,000	9,500	15,000	11,500	6,000
	S1	UL	UL	62,000	38,000	56,000	38,000	60,000	46,000	24,000
	SM	UL	UL	46,500	28,500	42,000	28,500	45,000	34,500	18,000
A-5	NS	UL	UL	UL	UL	UL	UL	UL	UL	UL
	S1									
	SM									
B	NS	UL	UL	37,500	23,000	28,500	19,000	36,000	18,000	9,000
	S1	UL	UL	150,000	92,000	114,000	76,000	144,000	72,000	36,000
	SM	UL	UL	112,500	69,000	85,500	57,000	108,000	54,000	27,000
E	NS	UL	UL	26,500	14,500	23,500	14,500	25,500	18,500	9.500
	S1	UL	UL	106,000	58,000	94,000	58,000	102,000	74,000	38,000
	SM	UL	UL	79,500	43,500	70,500	43,500	76,500	55,500	28,500
F-1	NS	UL	UL	25,000	15,500	19,000	12,000	33,500	14,000	8.500
	S1	UL	UL	100,000	62,000	76,000	48,000	134,000	56,000	34,000
	SM	UL	UL	75,000	46,500	57,000	36,000	100,500	42,000	25,500
F-2	NS	UL	UL	37,500	23,000	28,500	18,000	50,500	21,000	13,000
	S1	UL	UL	150,000	92,000	114,000	72,000	202,000	84,000	52,000
	SM	UL	UL	112,500	69,000	85,500	54,000	151,500	63,000	39,000
H-1	NS[c]	21,000	16,500	11,000	7,000	9.500	7,000	10,500	7,500	NP
	S1									
H-2	NS[c]	21,000	16,500	11,000	7,000	9.500	7,000	10,500	7,500	3,000
	S1									
	SM									
H-3	NS[c]	UL	60,000	26,500	14,000	17,500	13,000	25,500	10,000	5,000
	S1									
	SM									
H-4	NS[c, d]	UL	UL	37,500	17,500	28,500	17,500	36,000	18,000	6,500
	S1	UL	UL	150,000	70,000	114,000	70,000	144,000	72,000	26,000
	SM	UL	UL	112,500	52,500	85,500	52,500	108,000	54,000	19,500
H-5	NS[c, d]	UL	UL	37,500	23,000	28,500	19,000	36,000	18,000	9,000
	S1	UL	UL	150,000	92,000	114,000	76,000	144,000	72,000	36,000
	SM	UL	UL	112,500	69,000	85,500	57,000	108000	54,000	27,000

(continued)

TABLE 506.2[a, b]—continued
ALLOWABLE AREA FACTOR (A_t = NS, S1, S13R, or SM, as applicable) IN SQUARE FEET

OCCUPANCY CLASSIFICATION	SEE FOOTNOTES	TYPE OF CONSTRUCTION								
		TYPE I		TYPE II		TYPE III		TYPE IV	TYPE V	
		A	B	A	B	A	B	HT	A	B
I-1	NS[d, e]	UL	55,000	19,000	10,000	16,500	10,000	18,000	10,500	4,500
	S1	UL	220,000	76,000	40,000	66,000	40,000	72,000	42,000	18,000
	SM	UL	165,000	57,000	30,000	49,500	30,000	54,000	31,500	13,500
I-2	NS[d, f]	UL	UL	15,000	11,000	12,000	NP	12,000	9,500	NP
	S1	UL	UL	60,000	44,000	48,000	NP	48,000	38,000	NP
	SM	UL	UL	45,000	33,000	36,000	NP	36,000	28,500	NP
I-3	NS[d, e]	UL	UL	15,000	10,000	10,500	7,500	12,000	7,500	5,000
	S1	UL	UL	45,000	40,000	42,000	30,000	48,000	30,000	20,000
	SM	UL	UL	45,000	30,000	31,500	22,500	36,000	22,500	15,000
I-4	NS[d, g]	UL	60.500	26,500	13,000	23,500	13,000	25,500	18,500	9,000
	S1	UL	121,000	106,000	52,000	94,000	52,000	102,000	74,000	36,000
	SM	UL	181,500	79,500	39,000	70,500	39,000	76,500	55,500	27,000
M	NS	UL	UL	21,500	12,500	18,500	12,500	20,500	14,000	9,000
	S1	UL	UL	86,000	50,000	74,000	50,000	82,000	56,000	36,000
	SM	UL	UL	64,500	37,500	55,500	37,500	61,500	42,000	27,000
R-1	NS[d, h]	UL	UL	24,000	16,000	24,000	16,000	20,500	12,000	7,000
	S13R									
	S1	UL	UL	96,000	64,000	96,000	64,000	82,000	48,000	28,000
	SM	UL	UL	72,000	48,000	72,000	48,000	61,500	36,000	21,000
R-2	NS[d, h]	UL	UL	24,000	16,000	24,000	16,000	20,500	12,000	7,000
	S13R									
	S1	UL	UL	96,000	64,000	96,000	64,000	82,000	48,000	28,000
	SM	UL	UL	72,000	48,000	72,000	48,000	61,500	36,000	21,000
R-3	NS[d, h]	UL	UL	UL	UL	UL	UL	UL	UL	UL
	S13R									
	S1									
	SM									
R-4	NS[d, h]	UL	UL	24,000	16,000	24,000	16,000	20,500	12,000	7,000
	S13R									
	S1	UL	UL	96,000	64,000	96,000	64,000	82,000	48,000	28,000
	SM	UL	UL	72,000	48,000	72,000	48,000	61,500	36,000	21,000
S-1	NS	UL	48,000	26,000	17,500	26,000	17,500	25,500	14,000	9,000
	S1	UL	192,000	104,000	70,000	104,000	70,000	102,000	56,000	36,000
	SM	UL	144,000	78,000	52,500	78,000	52,500	76,500	42,000	27,000
S-2	NS	UL	79,000	39,000	26,000	39,000	26,000	38,500	21,000	13,500
	S1	UL	316,000	156,000	104,000	156,000	104,000	154,000	84,000	54,000
	SM	UL	237,000	117,000	78,000	117,000	78,000	115,500	63,000	40,500
U	NS	UL	35,500	19,000	8,500	14,000	8,500	18,000	9,000	5,500
	S1	UL	142,000	76,000	34,000	56,000	34,000	72,000	36,000	22,000
	SM	UL	106,500	57,000	25,500	42,000	25,500	54,000	27,000	16,500

(continued)

TABLE 506.2[a,b]—continued
ALLOWABLE AREA FACTOR (A_t = NS, S1, S13R, or SM, as applicable) IN SQUARE FEET

Note: UL = Unlimited; NP = Not permitted;

For SI: 1 square foot = 0.0929 m^2.

NS = Buildings not equipped throughout with an automatic sprinkler system; S1 = Buildings a maximum of one story above grade plane equipped throughout with an automatic sprinkler system installed in accordance with Section 903.3.1.1; SM = Buildings two or more stories above grade plane equipped throughout with an automatic sprinkler system installed in accordance with Section 903.3.1.1; S13R = Buildings equipped throughout with an automatic sprinkler system installed in accordance with Section 903.3.1.2.

a. See Chapters 4 and 5 for specific exceptions to the allowable height in this chapter.

b. See Section 903.2 for the minimum thresholds for protection by an automatic sprinkler system for specific occupancies.

c. New Group H occupancies are required to be protected by an automatic sprinkler system in accordance with Section 903.2.5.

d. The NS value is only for use in evaluation of existing building area in accordance with the *International Existing Building Code*.

e. New Group I-1 and I-3 occupancies are required to be protected by an automatic sprinkler system in accordance with Section 903.2.6. For new Group I-1 occupancies, Condition 1, see Exception 1 of Section 903.2.6.

f. New and existing Group I-2 occupancies are required to be protected by an automatic sprinkler system in accordance with Section 903.2.6 and Section 1103.5 of the *International Fire Code*.

g. New Group I-4 occupancies see Exceptions 2 and 3 of Section 903.2.6.

h. New Group R occupancies are required to be protected by an automatic sprinkler system in accordance with Section 903.2.8.

506.2.3 Single-occupancy, multistory buildings. The allowable area of a single-occupancy building with more than one story above grade plane shall be determined in accordance with Equation 5-2:

$$A_a = [A_t + (NS \times I_f)] \times S_a \qquad \textbf{(Equation 5-2)}$$

where:

A_a = Allowable area (square feet).

A_t = Tabular allowable area factor (NS, S13R or SM value, as applicable) in accordance with Table 506.2.

NS = Tabular allowable area factor in accordance with Table 506.2 for a nonsprinklered building (regardless of whether the building is sprinklered).

I_f = Area factor increase due to frontage (percent) as calculated in accordance with Section 506.3.

S_a = Actual number of building stories above grade plane, not to exceed three. For buildings equipped throughout with an automatic sprinkler system installed in accordance with Section 903.3.1.2, use the actual number of building stories above grade plane, not to exceed four.

No individual story shall exceed the allowable area (A_a) as determined by Equation 5-2 using the value of $S_a = 1$.

506.2.4 Mixed-occupancy, multistory buildings. Each story of a mixed-occupancy building with more than one story above grade plane shall individually comply with the applicable requirements of Section 508.1. For buildings with more than three stories above grade plane, the total building area shall be such that the aggregate sum of the ratios of the actual area of each story divided by the allowable area of such stories, determined in accordance with Equation 5-3 based on the applicable provisions of Section 508.1, shall not exceed three.

$$A_a = [A_t + (NS \times I_f)] \qquad \textbf{(Equation 5-3)}$$

where:

A_a = Allowable area (square feet).

A_t = Tabular allowable area factor (NS, S13R or SM value, as applicable) in accordance with Table 506.2.

NS = Tabular allowable area factor in accordance with Table 506.2 for a nonsprinklered building (regardless of whether the building is sprinklered).

I_f = Area factor increase due to frontage (percent) as calculated in accordance with Section 506.3.

Exception: For buildings designed as separated occupancies under Section 508.4 and equipped throughout with an *automatic sprinkler system* installed in accordance with Section 903.3.1.2, the total building area shall be such that the aggregate sum of the ratios of the actual area of each story divided by the allowable area of such stories determined in accordance with Equation 5-3 based on the applicable provisions of Section 508.1, shall not exceed four.

506.2.4.1 Group H-2 or H-3 mixed occupancies. For a building containing Group H-2 or H-3 occupancies, the allowable area shall be determined in accordance with Section 508.4.2, with the sprinkler system increase applicable only to the portions of the building not classified as Group H-2 or H-3.

506.3 Frontage increase. Every building shall adjoin or have access to a public way to receive an area factor increase based on frontage. Area factor increase shall be determined in accordance with Sections 506.3.1 through 506.3.3.

506.3.1 Minimum percentage of perimeter. To qualify for an area factor increase based on frontage, a building shall have not less than 25 percent of its perimeter on a public way or open space. Such open space shall be either on the same lot or dedicated for public use and shall be accessed from a street or approved fire lane.

506.3.2 Minimum frontage distance. To qualify for an area factor increase based on frontage, the public way or open space adjacent to the building perimeter shall have a minimum distance (W) of 20 feet (6096 mm) measured at right angles from the building face to any of the following:

1. The closest interior lot line.

2. The entire width of a street, alley or public way.
3. The exterior face of an adjacent building on the same property.

Where the value of W is greater than 30 feet (9144 mm), a value of 30 feet (9144 mm) shall be used in calculating the building area increase based on frontage, regardless of the actual width of the public way or open space. Where the value of W varies along the perimeter of the building, the calculation performed in accordance with Equation 5-5 shall be based on the weighted average calculated in accordance with Equation 5-4.

$$W = (L_1 \times w_1 + L_2 \times w_2 + L_3 \times w_3 \ldots)/F \qquad \textbf{(Equation 5-4)}$$

where:

W (Width: weighted average) = Calculated width of public way or open space (feet).

L_n = Length of a portion of the exterior perimeter wall.

w_n = Width ($\geq$ 20 feet) of a public way or open space associated with that portion of the exterior perimeter wall.

F = Building perimeter that fronts on a public way or open space having a width of 20 feet (6096 mm) or more.

Exception: Where a building meets the requirements of Section 507, as applicable, except for compliance with the minimum 60-foot (18 288 mm) *public way* or *yard* requirement, and the value of W is greater than 30 feet (9144 mm), the value of W shall not exceed 60 feet (18 288 mm).

506.3.3 Amount of increase. The area factor increase based on frontage shall be determined in accordance with Equation 5-5:

$$I_f = [F/P - 0.25]W/30 \qquad \textbf{(Equation 5-5)}$$

where:

I_f = Area factor increase due to frontage.

F = Building perimeter that fronts on a *public way* or open space having minimum distance of 20 feet (6096 mm).

P = Perimeter of entire building (feet).

W = Width of *public way* or open space (feet) in accordance with Section 506.3.2.

SECTION 507
UNLIMITED AREA BUILDINGS

507.1 General. The area of buildings of the occupancies and configurations specified in Sections 507.1 through 507.12 shall not be limited. Basements not more than one story below grade plane shall be permitted.

507.1.1 Accessory occupancies. Accessory occupancies shall be permitted in unlimited area buildings in accordance with the provisions of Section 508.2, otherwise the requirements of Sections 507.2 through 507.12 shall be applied, where applicable.

507.2 Measurement of open spaces. Where Sections 507.3 through 507.13 require buildings to be surrounded and adjoined by *public ways* and *yards*, those open spaces shall be determined as follows:

1. Yards shall be measured from the building perimeter in all directions to the closest interior *lot lines* or to the exterior face of an opposing building located on the same *lot*, as applicable.
2. Where the building fronts on a *public way*, the entire width of the *public way* shall be used.

507.2.1 Reduced open space. The *public ways* or *yards* of 60 feet (18 288 mm) in width required in Sections 507.3, 507.4, 507.5, 507.6 and 507.12 shall be permitted to be reduced to not less than 40 feet (12 192 mm) in width provided all of the following requirements are met:

1. The reduced width shall not be allowed for more than 75 percent of the perimeter of the building.
2. The *exterior walls* facing the reduced width shall have a *fire-resistance rating* of not less than 3 hours.
3. Openings in the *exterior walls* facing the reduced width shall have opening protectives with a *fire protection rating* of not less than 3 hours.

507.3 Nonsprinklered, one-story buildings. The area of a Group F-2 or S-2 building no more than one story in height shall not be limited where the building is surrounded and adjoined by *public ways* or *yards* not less than 60 feet (18 288 mm) in width.

507.4 Sprinklered, one-story buildings. The area of a Group A-4 building no more than one *story above grade plane* of other than Type V construction, or the area of a Group B, F, M or S building no more than one story above grade plane of any construction type, shall not be limited where the building is provided with an *automatic sprinkler system* throughout in accordance with Section 903.3.1.1 and is surrounded and adjoined by *public ways* or *yards* not less than 60 feet (18 288 mm) in width.

Exceptions:

1. Buildings and structures of Type I or II construction for rack storage facilities that do not have access by the public shall not be limited in height, provided that such buildings conform to the requirements of Sections 507.3 and 903.3.1.1 and Chapter 32 of the *International Fire Code*.
2. The *automatic sprinkler system* shall not be required in areas occupied for indoor participant sports, such as tennis, skating, swimming and equestrian activities in occupancies in Group A-4, provided that both of the following criteria are met:
   - 2.1. *Exit* doors directly to the outside are provided for occupants of the participant sports areas.
   - 2.2. The building is equipped with a *fire alarm system* with *manual fire alarm boxes* installed in accordance with Section 907.

507.4.1 Mixed occupancy buildings with Groups A-1 and A-2. Group A-1 and A-2 occupancies of other than Type V construction shall be permitted within mixed occupancy buildings of unlimited area complying with Section 507.3, provided all of the following criteria are met:

1. Group A-1 and A-2 occupancies are separated from other occupancies as required for separated occupancies in Section 508.4.4 with no reduction allowed in the *fire-resistance rating* of the separation based upon the installation of an *automatic sprinkler system.*
2. Each area of the portions of the building used for Group A-1 or A-2 occupancies shall not exceed the maximum allowable area permitted for such occupancies in Section 503.1.
3. *Exit* doors from Group A-1 and A-2 occupancies shall discharge directly to the exterior of the building.

507.5 Two-story buildings. The area of a Group B, F, M or S building no more than two *stories above grade plane* shall not be limited where the building is equipped throughout with an *automatic sprinkler system* in accordance with Section 903.3.1.1 and is surrounded and adjoined by *public ways* or *yards* not less than 60 feet (18 288 mm) in width.

507.6 Group A-3 buildings of Type II construction. The area of a Group A-3 building no more than one *story above grade plane*, used as a *place of religious worship*, community hall, dance hall, exhibition hall, gymnasium, lecture hall, indoor *swimming pool* or tennis court of Type II construction, shall not be limited provided all of the following criteria are met:

1. The building shall not have a *stage* other than a *platform.*
2. The building shall be equipped throughout with an *automatic sprinkler system* in accordance with Section 903.3.1.1.
3. The building shall be surrounded and adjoined by *public ways* or *yards* not less than 60 feet (18 288 mm) in width.

507.7 Group A-3 buildings of Type III and IV construction. The area of a Group A-3 building of Type III or IV construction, with no more than one *story above grade plane* and used as a *place of religious worship*, community hall, dance hall, exhibition hall, gymnasium, lecture hall, indoor *swimming pool* or tennis court, shall not be limited provided all of the following criteria are met:

1. The building shall not have a *stage* other than a *platform.*
2. The building shall be equipped throughout with an *automatic sprinkler system* in accordance with Section 903.3.1.1.
3. The assembly floor shall be located at or within 21 inches (533 mm) of street or grade level and all *exits* are provided with ramps complying with Section 1012 to the street or grade level.
4. The building shall be surrounded and adjoined by *public ways* or *yards* not less than 60 feet (18 288 mm) in width.

507.8 Group H-2, H-3 and H-4 occupancies. Group H-2, H-3 and H-4 occupancies shall be permitted in unlimited area buildings containing Group F or S occupancies in accordance with Sections 507.3 and 507.4 and the provisions of Sections 507.8.1 through 507.8.4.

507.8.1 Allowable area. The aggregate floor area of Group H occupancies located in an unlimited area building shall not exceed 10 percent of the area of the building or the area limitations for the Group H occupancies as specified in Section 506 based on the perimeter of each Group H floor area that fronts on a *public way* or open space.

507.8.1.1 Located within the building. The aggregate floor area of Group H occupancies not located at the perimeter of the building shall not exceed 25 percent of the area limitations for the Group H occupancies as specified in Section 506.

507.8.1.1.1 Liquid use, dispensing and mixing rooms. Liquid use, dispensing and mixing rooms having a floor area of not more than 500 square feet (46.5 m^2) need not be located on the outer perimeter of the building where they are in accordance with the *International Fire Code* and NFPA 30.

507.8.1.1.2 Liquid storage rooms. Liquid storage rooms having a floor area of not more than 1,000 square feet (93 m^2) need not be located on the outer perimeter where they are in accordance with the *International Fire Code* and NFPA 30.

507.8.1.1.3 Spray paint booths. Spray paint booths that comply with the *International Fire Code* need not be located on the outer perimeter.

507.8.2 Located on building perimeter. Except as provided for in Section 507.8.1.1, Group H occupancies shall be located on the perimeter of the building. In Group H-2 and H-3 occupancies, not less than 25 percent of the perimeter of such occupancies shall be an *exterior wall.*

507.8.3 Occupancy separations. Group H occupancies shall be separated from the remainder of the unlimited area building and from each other in accordance with Table 508.4.

507.8.4 Height limitations. For two-*story,* unlimited area buildings, Group H occupancies shall not be located more than one *story above grade plane* unless permitted based on the allowable height and number of *stories* and feet as specified in Section 504 based on the type of construction of the unlimited area building.

507.9 Unlimited mixed occupancy buildings with Group H-5. The area of a Group B, F, H-5, M or S building no more than two *stories above grade plane* shall not be limited where the building is equipped throughout with an *automatic sprinkler system* in accordance with Section 903.3.1.1, and is surrounded and adjoined by *public ways* or *yards* not less than

60 feet (18 288 mm) in width, provided all of the following criteria are met:

1. Buildings containing Group H-5 occupancy shall be of Type I or II construction.
2. Each area used for Group H-5 occupancy shall be separated from other occupancies as required in Sections 415.11 and 508.4.
3. Each area used for Group H-5 occupancy shall not exceed the maximum allowable area permitted for such occupancies in Section 503.1 including modifications of Section 506.

   Exception: Where the Group H-5 occupancy exceeds the maximum allowable area, the Group H-5 shall be subdivided into areas that are separated by 2-hour fire barriers.

507.10 Aircraft paint hangar. The area of a Group H-2 aircraft paint hangar no more than one *story above grade plane* shall not be limited where such aircraft paint hangar complies with the provisions of Section 412.6 and is surrounded and adjoined by *public ways* or *yards* not less in width than one and one-half times the *building height*.

507.11 Group E buildings. The area of a Group E building no more than one *story above grade plane*, of Type II, IIIA or IV construction, shall not be limited provided all of the following criteria are met:

1. Each classroom shall have not less than two *means of egress*, with one of the *means of egress* being a direct *exit* to the outside of the building complying with Section 1022.
2. The building is equipped throughout with an *automatic sprinkler system* in accordance with Section 903.3.1.1.
3. The building is surrounded and adjoined by *public ways* or *yards* not less than 60 feet (18 288 mm) in width.

507.12 Motion picture theaters. In buildings of Type II construction, the area of a motion picture theater located on the first *story above grade plane* shall not be limited where the building is provided with an *automatic sprinkler system* throughout in accordance with Section 903.3.1.1 and is surrounded and adjoined by *public ways* or *yards* not less than 60 feet (18 288 mm) in width.

507.13 Covered and open mall buildings and anchor buildings. The area of *covered and open mall buildings* and *anchor buildings* not exceeding three *stories* in height that comply with Section 402 shall not be limited.

SECTION 508
MIXED USE AND OCCUPANCY

508.1 General. Each portion of a building shall be individually classified in accordance with Section 302.1. Where a building contains more than one occupancy group, the building or portion thereof shall comply with the applicable provisions of Section 508.2, 508.3 or 508.4, or a combination of these sections.

Exceptions:

1. Occupancies separated in accordance with Section 510.
2. Where required by Table 415.6.2, areas of Group H-1, H-2 and H-3 occupancies shall be located in a *detached building* or structure.
3. Uses within *live/work units*, complying with Section 419, are not considered separate occupancies.

508.2 Accessory occupancies. Accessory occupancies are those occupancies that are ancillary to the main occupancy of the building or portion thereof. Accessory occupancies shall comply with the provisions of Sections 508.2.1 through 508.2.4.

508.2.1 Occupancy classification. Accessory occupancies shall be individually classified in accordance with Section 302.1. The requirements of this code shall apply to each portion of the building based on the occupancy classification of that space.

508.2.2 Allowable building height. The allowable height and number of stories of the building containing accessory occupancies shall be in accordance with Section 504 for the main occupancy of the building.

508.2.3 Allowable building area. The allowable area of the building shall be based on the applicable provisions of Section 506 for the main occupancy of the building. Aggregate accessory occupancies shall not occupy more than 10 percent of the floor area of the story in which they are located and shall not exceed the tabular values for nonsprinklered buildings in Table 506.2 for each such accessory occupancy.

508.2.4 Separation of occupancies. No separation is required between accessory occupancies and the main occupancy.

Exceptions:

1. Group H-2, H-3, H-4 and H-5 occupancies shall be separated from all other occupancies in accordance with Section 508.4.
2. Group I-1, R-1, R-2 and R-3 *dwelling units* and *sleeping units* shall be separated from other *dwelling* or *sleeping units* and from accessory occupancies contiguous to them in accordance with the requirements of Section 420.

508.3 Nonseparated occupancies. Buildings or portions of buildings that comply with the provisions of this section shall be considered as nonseparated occupancies.

508.3.1 Occupancy classification. Nonseparated occupancies shall be individually classified in accordance with Section 302.1. The requirements of this code shall apply to each portion of the building based on the occupancy classification of that space. In addition, the most restrictive provisions of Chapter 9 that apply to the nonseparated

occupancies shall apply to the total nonseparated occupancy area. Where nonseparated occupancies occur in a *high-rise building*, the most restrictive requirements of Section 403 that apply to the nonseparated occupancies shall apply throughout the *high-rise building*.

508.3.2 Allowable building area and height. The allowable *building area and height* of the building or portion thereof shall be based on the most restrictive allowances for the occupancy groups under consideration for the type of construction of the building in accordance with Section 503.1.

508.3.3 Separation. No separation is required between nonseparated occupancies.

Exceptions:

1. Group H-2, H-3, H-4 and H-5 occupancies shall be separated from all other occupancies in accordance with Section 508.4.
2. Group I-1, R-1, R-2 and R-3 *dwelling units* and *sleeping units* shall be separated from other *dwelling* or *sleeping units* and from other occupancies contiguous to them in accordance with the requirements of Section 420.

508.4 Separated occupancies. Buildings or portions of buildings that comply with the provisions of this section shall be considered as separated occupancies.

508.4.1 Occupancy classification. Separated occupancies shall be individually classified in accordance with Section 302.1. Each separated space shall comply with this code based on the occupancy classification of that portion of the building.

508.4.2 Allowable building area. In each *story*, the *building area* shall be such that the sum of the ratios of the actual *building area* of each separated occupancy divided by the allowable *building* area of each separated occupancy shall not exceed 1.

508.4.3 Allowable height. Each separated occupancy shall comply with the *building height* limitations based on the type of construction of the building in accordance with Section 503.1.

Exception: Special provisions of Section 510 shall permit occupancies at *building heights* other than provided in Section 503.1.

508.4.4 Separation. Individual occupancies shall be separated from adjacent occupancies in accordance with Table 508.4.

508.4.4.1 Construction. Required separations shall be *fire barriers* constructed in accordance with Section 707 or *horizontal assemblies* constructed in accordance with Section 711, or both, so as to completely separate adjacent occupancies.

SECTION 509
INCIDENTAL USES

509.1 General Incidental uses located within single occupancy or mixed occupancy buildings shall comply with the provisions of this section. Incidental uses are ancillary functions associated with a given occupancy that generally pose a greater level of risk to that occupancy and are limited to those uses listed in Table 509.

Exception: Incidental uses within and serving a *dwelling unit* are not required to comply with this section.

TABLE 508.4
REQUIRED SEPARATION OF OCCUPANCIES (HOURS)

OCCUPANCY	A, E		I-1[a], I-3, I-4		I-2		R[a]		F-2, S-2[b], U		B[e], F-1, M, S-1		H-1		H-2		H-3, H-4		H-5	
	S	NS	S	NS	S	NS	S	NS	S	NS	S	NS	S	NS	S	NS	S	NS	S	NS
A, E	N	N	1	2	2	NP	1	2	N	1	1	2	NP	NP	3	4	2	3	2	NP
I-1[a], I-3, I-4	—	—	N	N	2	NP	1	NP	1	2	1	2	NP	NP	3	NP	2	NP	2	NP
I-2	—	—	—	—	N	N	2	NP	2	NP	2	NP	NP	NP	3	NP	2	NP	2	NP
R[a]	—	—	—	—	—	—	N	N	1[c]	2[c]	1	2	NP	NP	3	NP	2	NP	2	NP
F-2, S-2[b], U	—	—	—	—	—	—	—	—	N	N	1	2	NP	NP	3	4	2	3	2	NP
B[e], F-1, M, S-1	—	—	—	—	—	—	—	—	—	—	N	N	NP	NP	2	3	1	2	1	NP
H-1	—	—	—	—	—	—	—	—	—	—	—	—	N	NP	NP	NP	NP	NP	NP	NP
H-2	—	—	—	—	—	—	—	—	—	—	—	—	—	—	N	NP	1	NP	1	NP
H-3, H-4	—	—	—	—	—	—	—	—	—	—	—	—	—	—	—	—	1[d]	NP	1	NP
H-5	—	—	—	—	—	—	—	—	—	—	—	—	—	—	—	—	—	—	N	NP

S = Buildings equipped throughout with an automatic sprinkler system installed in accordance with Section 903.3.1.1.
NS = Buildings not equipped throughout with an automatic sprinkler system installed in accordance with Section 903.3.1.1.
N = No separation requirement.
NP = Not permitted.
a See Section 420.
b. The required separation from areas used only for private or pleasure vehicles shall be reduced by 1 hour but not to less than 1 hour.
c. See Section 406.3.4.
d. Separation is not required between occupancies of the same classification.
e. See Section 422.2 for ambulatory care facilities.

509.2 Occupancy classification. Incidental uses shall not be individually classified in accordance with Section 302.1. Incidental uses shall be included in the building occupancies within which they are located.

509.3 Area limitations. Incidental uses shall not occupy more than 10 percent of the *building area* of the *story* in which they are located.

509.4 Separation and protection. The incidental uses listed in Table 509 shall be separated from the remainder of the building or equipped with an *automatic sprinkler system*, or both, in accordance with the provisions of that table.

509.4.1 Separation. Where Table 509 specifies a fire-resistance-rated separation, the incidental uses shall be separated from the remainder of the *building* by a *fire barrier* constructed in accordance with Section 707 or a *horizontal assembly* constructed in accordance with Section 711, or both. Construction supporting 1-hour *fire barriers* or *horizontal assemblies* used for incidental use separations in buildings of Type IIB, IIIB and VB construction is not required to be fire-resistance rated unless required by other sections of this code.

509.4.2 Protection. Where Table 509 permits an *automatic sprinkler system* without a *fire barrier*, the incidental uses shall be separated from the remainder of the building by construction capable of resisting the passage of smoke. The walls shall extend from the top of the foundation or floor assembly below to the underside of the ceiling that is a component of a fire-resistance-rated floor assembly or roof assembly above or to the underside of the floor or roof sheathing, deck or slab above. Doors shall be self- or automatic-closing upon detection of smoke in accordance with Section 716.5.9.3. Doors shall not have air transfer openings and shall not be undercut in excess of the clearance permitted in accordance with NFPA 80. Walls surrounding the incidental use shall not have air transfer openings unless provided with smoke dampers in accordance with Section 710.8.

TABLE 509
INCIDENTAL USES

ROOM OR AREA	SEPARATION AND/OR PROTECTION
Furnace room where any piece of equipment is over 400,000 Btu per hour input	1 hour or provide automatic sprinkler system
Rooms with boilers where the largest piece of equipment is over 15 psi and 10 horsepower	1 hour or provide automatic sprinkler system
Refrigerant machinery room	1 hour or provide automatic sprinkler system
Hydrogen fuel gas rooms, not classified as Group H	1 hour in Group B, F, M, S and U occupancies; 2 hours in Group A, E, I and R occupancies.
Incinerator rooms	2 hours and automatic sprinkler system
Paint shops, not classified as Group H, located in occupancies other than Group F	2 hours; or 1 hour and provide automatic sprinkler system
In Group E occupancies, laboratories and vocational shops not classified as Group H	1 hour or provide automatic sprinkler system
In Group I-2 occupancies, laboratories not classified as Group H	1 hour and provide automatic sprinkler system
In ambulatory care facilities, laboratories not classified as Group H	1 hour and provide automatic sprinkler system
Laundry rooms over 100 square feet	1 hour or provide automatic sprinkler system
In Group I-2, laundry rooms over 100 square feet	1 hour
Group I-3 cells and Group I-2 patient rooms equipped with padded surfaces	1 hour
In Group I-2, physical plant maintenance shops	1 hour
In ambulatory care facilities or Group I-2 occupancies, waste and linen collection rooms with containers that have an aggregate volume of 10 cubic feet or greater	1 hour
In other than ambulatory care facilities and Group I-2 occupancies, waste and linen collection rooms over 100 square feet	1 hour or provide automatic sprinkler system
In ambulatory care facilities or Group I-2 occupancies, storage rooms greater than 100 square feet	1 hour
Stationary storage battery systems having a liquid electrolyte capacity of more than 50 gallons for flooded lead-acid, nickel cadmium or VRLA, or more than 1,000 pounds for lithium-ion and lithium metal polymer used for facility standby power, emergency power or uninterruptable power supplies	1 hour in Group B, F, M, S and U occupancies; 2 hours in Group A, E, I and R occupancies.

For SI: 1 square foot = 0.0929 m^2, 1 pound per square inch (psi) = 6.9 kPa, 1 British thermal unit (Btu) per hour = 0.293 watts, 1 horsepower = 746 watts, 1 gallon = 3.785 L, 1 cubic foot = 0.0283 m^3.

509.4.2.1 Protection limitation. Where an *automatic sprinkler system* is provided in accordance with Table 509, only the space occupied by the incidental use need be equipped with such a system.

SECTION 510
SPECIAL PROVISIONS

510.1 General. The provisions in Sections 510.2 through 510.9 shall permit the use of special conditions that are exempt from, or modify, the specific requirements of this chapter regarding the allowable *building heights and areas* of buildings based on the occupancy classification and type of construction, provided the special condition complies with the provisions specified in this section for such condition and other applicable requirements of this code. The provisions of Sections 510.2 through 510.8 are to be considered independent and separate from each other.

510.2 Horizontal building separation allowance. A building shall be considered as separate and distinct buildings for the purpose of determining area limitations, continuity of *fire walls*, limitation of number of *stories* and type of construction where all of the following conditions are met:

1. The buildings are separated with a *horizontal assembly* having a *fire-resistance rating* of not less than 3 hours.
2. The building below the *horizontal assembly* is of Type IA construction.
3. *Shaft*, *stairway*, *ramp* and escalator enclosures through the *horizontal assembly* shall have not less than a 2-hour *fire-resistance rating* with opening protectives in accordance with Section 716.5.

   Exception: Where the enclosure walls below the *horizontal assembly* have not less than a 3-hour *fire-resistance rating* with opening protectives in accordance with Section 716.5, the enclosure walls extending above the *horizontal assembly* shall be permitted to have a 1-hour *fire-resistance rating*, provided:

   1. The building above the *horizontal assembly* is not required to be of Type I construction;
   2. The enclosure connects fewer than four *stories*; and
   3. The enclosure opening protectives above the *horizontal assembly* have a *fire protection rating* of not less than 1 hour.
4. The building or buildings above the *horizontal assembly* shall be permitted to have multiple Group A occupancy uses, each with an *occupant load* of less 300, or Group B, M, R or S occupancies.
5. The building below the *horizontal assembly* shall be protected throughout by an *approved automatic sprinkler system* in accordance with Section 903.3.1.1, and shall be permitted to be any occupancy allowed by this code except Group H.
6. The maximum *building height* in feet (mm) shall not exceed the limits set forth in Section 504.3 for the building having the smaller allowable height as measured from the *grade plane*.

510.3 Group S-2 enclosed parking garage with Group S-2 open parking garage above. A Group S-2 enclosed parking garage with not more than one *story* above *grade plane* and located below a Group S-2 *open parking garage* shall be classified as a separate and distinct building for the purpose of determining the type of construction where all of the following conditions are met:

1. The allowable area of the building shall be such that the sum of the ratios of the actual area divided by the allowable area for each separate occupancy shall not exceed 1.
2. The Group S-2 enclosed parking garage is of Type I or II construction and is at least equal to the *fire-resistance* requirements of the Group S-2 *open parking garage*.
3. The height and the number of tiers of the Group S-2 *open parking garage* shall be limited as specified in Table 406.5.4.
4. The floor assembly separating the Group S-2 enclosed parking garage and Group S-2 *open parking garage* shall be protected as required for the floor assembly of the Group S-2 enclosed parking garage. Openings between the Group S-2 enclosed parking garage and Group S-2 *open parking garage*, except *exit* openings, shall not be required to be protected.
5. The Group S-2 enclosed parking garage is used exclusively for the parking or storage of private motor vehicles, but shall be permitted to contain an office, waiting room and toilet room having a total area of not more than 1,000 square feet (93 m^2) and mechanical equipment rooms incidental to the operation of the building.

510.4 Parking beneath Group R. Where a maximum one *story above grade plane* Group S-2 parking garage, enclosed or open, or combination thereof, of Type I construction or open of Type IV construction, with grade entrance, is provided under a building of Group R, the number of *stories* to be used in determining the minimum type of construction shall be measured from the floor above such a parking area. The floor assembly between the parking garage and the Group R above shall comply with the type of construction required for the parking garage and shall also provide a *fire-resistance rating* not less than the mixed occupancy separation required in Section 508.4.

510.5 Group R-1 and R-2 buildings of Type IIIA construction. The height limitation for buildings of Type IIIA construction in Groups R-1 and R-2 shall be increased to six *stories* and 75 feet (22 860 mm) where the first floor assembly above the *basement* has a *fire-resistance rating* of not less than 3 hours and the floor area is subdivided by 2-hour fire-resistance-rated *fire walls* into areas of not more than 3,000 square feet (279 m^2).

510.6 Group R-1 and R-2 buildings of Type IIA construction. The height limitation for buildings of Type IIA construction in Groups R-1 and R-2 shall be increased to nine *stories* and 100 feet (30 480 mm) where the building is separated by not less than 50 feet (15 240 mm) from any other building on the *lot* and from *lot lines*, the *exits* are segregated in an area enclosed by a 2-hour fire-resistance-rated *fire wall* and the first floor assembly has a *fire-resistance rating* of not less than $1^1/_2$ hours.

510.7 Open parking garage beneath Groups A, I, B, M and R. *Open parking garages* constructed under Groups A, I, B, M and R shall not exceed the height and area limitations permitted under Section 406.5. The height and area of the portion of the building above the *open parking garage* shall not exceed the limitations in Section 503 for the upper occupancy. The height, in both feet and *stories*, of the portion of the building above the *open parking garage* shall be measured from *grade plane* and shall include both the *open parking garage* and the portion of the building above the parking garage.

510.7.1 Fire separation. *Fire barriers* constructed in accordance with Section 707 or *horizontal assemblies* constructed in accordance with Section 711 between the parking occupancy and the upper occupancy shall correspond to the required *fire-resistance rating* prescribed in Table 508.4 for the uses involved. The type of construction shall apply to each occupancy individually, except that structural members, including main bracing within the open parking structure, which is necessary to support the upper occupancy, shall be protected with the more restrictive fire-resistance-rated assemblies of the groups involved as shown in Table 601. *Means of egress* for the upper occupancy shall conform to Chapter 10 and shall be separated from the parking occupancy by *fire barriers* having not less than a 2-hour *fire-resistance rating* as required by Section 706 with *self-closing* doors complying with Section 716 or *horizontal assemblies* having not less than a 2-hour *fire-resistance rating* as required by Section 711, with *self-closing* doors complying with Section 716. *Means of egress* from the *open parking garage* shall comply with Section 406.5.

510.8 Group B or M buildings with Group S-2 open parking garage above. Group B or M occupancies located below a Group S-2 open parking garage of a lesser type of construction shall be considered as a separate and distinct building from the Group S-2 open parking garage for the purpose of determining the type of construction where all of the following conditions are met:

1. The buildings are separated with a *horizontal assembly* having a *fire-resistance rating* of not less than 2 hours.
2. The occupancies in the building below the *horizontal assembly* are limited to Groups B and M.
3. The occupancy above the *horizontal assembly* is limited to a Group S-2 *open parking garage*.
4. The building below the horizontal assembly is of Type IA construction.

   Exception: The building below the *horizontal assembly* shall be permitted to be of Type IB or II construction, but not less than the type of construction required for the Group S-2 *open parking garage* above, where the building below is not greater than one story in height above grade plane.
5. The height and area of the building below the *horizontal assembly* does not exceed the limits set forth in Section 503.
6. The height and area of the Group S-2 *open parking garage* does not exceed the limits set forth in Section 406.5. The height, in both feet and *stories*, of the Group S-2 *open parking garage* shall be measured from *grade plane* and shall include the building below the *horizontal assembly*.
7. *Exits* serving the Group S-2 *open parking garage* discharge directly to a street or *public way* and are separated from the building below the *horizontal assembly* by 2-hour *fire barriers* constructed in accordance with Section 707 or 2-hour *horizontal assemblies* constructed in accordance with Section 711, or both.

510.9 Multiple buildings above a horizontal assembly. Where two or more buildings are provided above the *horizontal assembly* separating a Group S-2 parking garage or building below from the buildings above in accordance with the special provisions in Section 510.2, 510.3 or 510.8, the buildings above the *horizontal assembly* shall be regarded as separate and distinct buildings from each other and shall comply with all other provisions of this code as applicable to each separate and distinct building.

CHAPTER 6

TYPES OF CONSTRUCTION

SECTION 601
GENERAL

601.1 Scope. The provisions of this chapter shall control the classification of buildings as to type of construction.

SECTION 602
CONSTRUCTION CLASSIFICATION

602.1 General. Buildings and structures erected or to be erected, altered or extended in height or area shall be classified in one of the five construction types defined in Sections 602.2 through 602.5. The building elements shall have a *fire-resistance rating* not less than that specified in Table 601 and exterior walls shall have a *fire-resistance rating* not less than that specified in Table 602. Where required to have a *fire-resistance rating* by Table 601, building elements shall comply with the applicable provisions of Section 703.2. The protection of openings, ducts and air transfer openings in building elements shall not be required unless required by other provisions of this code.

602.1.1 Minimum requirements. A building or portion thereof shall not be required to conform to the details of a type of construction higher than that type which meets the minimum requirements based on occupancy even though certain features of such a building actually conform to a higher type of construction.

602.2 Types I and II. Types I and II construction are those types of construction in which the building elements listed in Table 601 are of noncombustible materials, except as permitted in Section 603 and elsewhere in this code.

602.3 Type III. Type III construction is that type of construction in which the exterior walls are of noncombustible materials and the interior building elements are of any material permitted by this code. *Fire-retardant-treated wood* framing complying with Section 2303.2 shall be permitted within *exterior wall* assemblies of a 2-hour rating or less.

602.4 Type IV. Type IV construction (Heavy Timber, HT) is that type of construction in which the exterior walls are of noncombustible materials and the interior building elements are of solid or laminated wood without concealed spaces. The details of Type IV construction shall comply with the provisions of this section and Section 2304.11. Exterior walls complying with Section 602.4.1 or 602.4.2 shall be permitted. Minimum solid sawn nominal dimensions are required for structures built using Type IV construction (HT). For glued-laminated members and structural composite lumber (SCL) members, the equivalent net finished width and depths corresponding to the minimum nominal width and depths of solid sawn lumber are required as specified in Table 602.4. *Cross-laminated timber* (CLT) dimensions used in this section are actual dimensions.

TABLE 601
FIRE-RESISTANCE RATING REQUIREMENTS FOR BUILDING ELEMENTS (HOURS)

BUILDING ELEMENT	TYPE I		TYPE II		TYPE III		TYPE IV	TYPE V	
	A	B	A	B	A	B	HT	A	B
Primary structural frame[f] (see Section 202)	3[a]	2[a]	1	0	1	0	HT	1	0
Bearing walls									
Exterior[e, f]	3	2	1	0	2	2	2	1	0
Interior	3[a]	2[a]	1	0	1	0	1/HT	1	0
Nonbearing walls and partitions Exterior	See Table 602								
Nonbearing walls and partitions Interior[d]	0	0	0	0	0	0	See Section 602.4.6	0	0
Floor construction and associated secondary members (see Section 202)	2	2	1	0	1	0	HT	1	0
Roof construction and associated secondary members (see Section 202)	$1^1/_2$[b]	1[b,c]	1[b,c]	0[c]	1[b,c]	0	HT	1[b,c]	0

For SI: 1 foot = 304.8 mm.

a. Roof supports: Fire-resistance ratings of primary structural frame and bearing walls are permitted to be reduced by 1 hour where supporting a roof only.

b. Except in Group F-1, H, M and S-1 occupancies, fire protection of structural members shall not be required, including protection of roof framing and decking where every part of the roof construction is 20 feet or more above any floor immediately below. Fire-retardant-treated wood members shall be allowed to be used for such unprotected members.

c. In all occupancies, heavy timber shall be allowed where a 1-hour or less fire-resistance rating is required.

d. Not less than the fire-resistance rating required by other sections of this code.

e. Not less than the fire-resistance rating based on fire separation distance (see Table 602).

f. Not less than the fire-resistance rating as referenced in Section 704.10.

602.4.1 Fire-retardant-treated wood in exterior walls. *Fire-retardant-treated wood* framing complying with Section 2303.2 shall be permitted within exterior wall assemblies with a 2-hour rating or less.

602.4.2 Cross-laminated timber in exterior walls. *Cross-laminated timber* complying with Section 2303.1.4 shall be permitted within exterior wall assemblies with a 2-hour rating or less, provided the exterior surface of the cross-laminated timber is protected by one the following:

1. *Fire-retardant-treated wood* sheathing complying with Section 2303.2 and not less than $^{15}/_{32}$ inch (12 mm) thick;
2. *Gypsum board* not less than $^{1}/_{2}$ inch (12.7 mm) thick; or
3. A noncombustible material.

602.4.3 Columns. Wood columns shall be sawn or glued laminated and shall be not less than 8 inches (203 mm), nominal, in any dimension where supporting floor loads and not less than 6 inches (152 mm) nominal in width and not less than 8 inches (203 mm) nominal in depth where supporting roof and ceiling loads only. Columns shall be continuous or superimposed and connected in an *approved* manner.

602.4.4 Floor framing. Wood beams and girders shall be of sawn or glued-laminated timber and shall be not less than 6 inches (152 mm) nominal in width and not less than 10 inches (254 mm) nominal in depth. Framed sawn or glued-laminated timber arches, which spring from the floor line and support floor loads, shall be not less than 8 inches (203 mm) nominal in any dimension. Framed timber trusses supporting floor loads shall have members of not less than 8 inches (203 mm) nominal in any dimension.

602.4.5 Roof framing. Wood-frame or glued-laminated arches for roof construction, which spring from the floor line or from grade and do not support floor loads, shall have members not less than 6 inches (152 mm) nominal in width and have not less than 8 inches (203 mm) nominal in depth for the lower half of the height and not less than 6

TABLE 602
FIRE-RESISTANCE RATING REQUIREMENTS FOR EXTERIOR WALLS BASED ON FIRE SEPARATION DISTANCE[a, d, g]

FIRE SEPARATION DISTANCE = X (feet)	TYPE OF CONSTRUCTION	OCCUPANCY GROUP H[e]	OCCUPANCY GROUP F-1, M, S-1[f]	OCCUPANCY GROUP A, B, E, F-2, I, R, S-2, U
$X < 5^b$	All	3	2	1
$5 \le X < 10$	IA Others	3 2	2 1	1 1
$10 \le X < 30$	IA, IB IIB, VB Others	2 1 1	1 0 1	1[c] 0 1[c]
$X \ge 30$	All	0	0	0

For SI: 1 foot = 304.8 mm.

a. Load-bearing exterior walls shall also comply with the fire-resistance rating requirements of Table 601.

b. See Section 706.1.1 for party walls.

c. Open parking garages complying with Section 406 shall not be required to have a fire-resistance rating.

d. The fire-resistance rating of an exterior wall is determined based upon the fire separation distance of the exterior wall and the story in which the wall is located.

e. For special requirements for Group H occupancies, see Section 415.6.

f. For special requirements for Group S aircraft hangars, see Section 412.4.1.

g. Where Table 705.8 permits nonbearing exterior walls with unlimited area of unprotected openings, the required fire-resistance rating for the exterior walls is 0 hours.

TABLE 602.4
WOOD MEMBER SIZE EQUIVALENCIES

MINIMUM NOMINAL SOLID SAWN SIZE		MINIMUM GLUED-LAMINATED NET SIZE		MINIMUM STRUCTURAL COMPOSITE LUMBER NET SIZE	
Width, inch	Depth, inch	Width, inch	Depth, inch	Width, inch	Depth, inch
8	8	$6^3/_4$	$8^1/_4$	7	$7^1/_2$
6	10	5	$10^1/_2$	$5^1/_4$	$9^1/_2$
6	8	5	$8^1/_4$	$5^1/_4$	$7^1/_2$
6	6	5	6	$5^1/_4$	$5^1/_2$
4	6	3	$6^7/_8$	$3^1/_2$	$5^1/_2$

For SI:1 inch = 25.4 mm.

inches (152 mm) nominal in depth for the upper half. Framed or glued-laminated arches for roof construction that spring from the top of walls or wall abutments, framed timber trusses and other roof framing, which do not support floor loads, shall have members not less than 4 inches (102 mm) nominal in width and not less than 6 inches (152 mm) nominal in depth. Spaced members shall be permitted to be composed of two or more pieces not less than 3 inches (76 mm) nominal in thickness where blocked solidly throughout their intervening spaces or where spaces are tightly closed by a continuous wood cover plate of not less than 2 inches (51 mm) nominal in thickness secured to the underside of the members. Splice plates shall be not less than 3 inches (76 mm) nominal in thickness. Where protected by *approved* automatic sprinklers under the roof deck, framing members shall be not less than 3 inches (76 mm) nominal in width.

602.4.6 Floors. Floors shall be without concealed spaces. Wood floors shall be constructed in accordance with Section 602.4.6.1 or 602.4.6.2.

602.4.6.1 Sawn or glued-laminated plank floors. Sawn or glued-laminated plank floors shall be one of the following:

1. Sawn or glued-laminated planks, splined or tongue-and-groove, of not less than 3 inches (76 mm) nominal in thickness covered with 1-inch (25 mm) nominal dimension tongue-and-groove flooring, laid crosswise or diagonally, $^{15}/_{32}$-inch (12 mm) wood structural panel or $^{1}/_{2}$-inch (12.7 mm) particleboard.
2. Planks not less than 4 inches (102 mm) nominal in width set on edge close together and well spiked and covered with 1-inch (25 mm) nominal dimension flooring or $^{15}/_{32}$-inch (12 mm) wood structural panel or $^{1}/_{2}$-inch (12.7 mm) particleboard.

The lumber shall be laid so that no continuous line of joints will occur except at points of support. Floors shall not extend closer than $^{1}/_{2}$ inch (12.7 mm) to walls. Such $^{1}/_{2}$-inch (12.7 mm) space shall be covered by a molding fastened to the wall and so arranged that it will not obstruct the swelling or shrinkage movements of the floor. Corbelling of masonry walls under the floor shall be permitted to be used in place of molding.

602.4.6.2 Cross-laminated timber floors. *Cross-laminated timber* shall be not less than 4 inches (102 mm) in thickness. *Cross-laminated timber* shall be continuous from support to support and mechanically fastened to one another. *Cross-laminated timber* shall be permitted to be connected to walls without a shrinkage gap providing swelling or shrinking is considered in the design. Corbelling of masonry walls under the floor shall be permitted to be used.

602.4.7 Roofs. Roofs shall be without concealed spaces and wood roof decks shall be sawn or glued laminated, splined or tongue-and-groove plank, not less than 2 inches (51 mm) nominal in thickness; $1^{1}/_{8}$-inch-thick (32 mm) wood structural panel (exterior glue); planks not less than 3 inches (76 mm) nominal in width, set on edge close together and laid as required for floors; or of cross-laminated timber. Other types of decking shall be permitted to be used if providing equivalent fire resistance and structural properties.

Cross-laminated timber roofs shall be not less than 3 inches (76 mm) nominal in thickness and shall be continuous from support to support and mechanically fastened to one another.

602.4.8 Partitions and walls. Partitions and walls shall comply with Section 602.4.8.1 or 602.4.8.2.

602.4.8.1 Interior walls and partitions. Interior walls and partitions shall be of solid wood construction formed by not less than two layers of 1-inch (25 mm) matched boards or laminated construction 4 inches (102 mm) thick, or of 1-hour fire-resistance-rated construction.

602.4.8.2 Exterior walls. Exterior walls shall be of one of the following:

1. Noncombustible materials.
2. Not less than 6 inches (152 mm) in thickness and constructed of one of the following:
   - 2.1. *Fire-retardant-treated wood* in accordance with Section 2303.2 and complying with Section 602.4.1.
   - 2.2. *Cross-laminated timber* complying with Section 602.4.2.

602.4.9 Exterior structural members. Where a horizontal separation of 20 feet (6096 mm) or more is provided, wood columns and arches conforming to heavy timber sizes shall be permitted to be used externally.

602.5 Type V. Type V construction is that type of construction in which the structural elements, *exterior walls* and interior walls are of any materials permitted by this code.

SECTION 603
COMBUSTIBLE MATERIAL IN TYPES I AND II CONSTRUCTION

603.1 Allowable materials. Combustible materials shall be permitted in buildings of Type I or II construction in the following applications and in accordance with Sections 603.1.1 through 603.1.3:

1. *Fire-retardant-treated wood* shall be permitted in:
   - 1.1. Nonbearing partitions where the required *fire-resistance rating* is 2 hours or less.
   - 1.2. Nonbearing *exterior walls* where fire-resistance-rated construction is not required.
   - 1.3. Roof construction, including girders, trusses, framing and decking.

     Exception: In buildings of Type IA construction exceeding two *stories above grade plane*, *fire-retardant-treated wood* is not permitted in roof construction where

the vertical distance from the upper floor to the roof is less than 20 feet (6096 mm).

2. Thermal and acoustical insulation, other than foam plastics, having a *flame spread index* of not more than 25.

   Exceptions:

   1. Insulation placed between two layers of noncombustible materials without an intervening airspace shall be allowed to have a *flame spread index* of not more than 100.
   2. Insulation installed between a finished floor and solid decking without intervening airspace shall be allowed to have a *flame spread index* of not more than 200.

3. Foam plastics in accordance with Chapter 26.
4. Roof coverings that have an A, B or C classification.
5. *Interior floor finish* and floor covering materials installed in accordance with Section 804.
6. Millwork such as doors, door frames, window sashes and frames.
7. *Interior wall and ceiling finishes* installed in accordance with Sections 801 and 803.
8. *Trim* installed in accordance with Section 806.
9. Where not installed greater than 15 feet (4572 mm) above grade, show windows, nailing or furring strips and wooden bulkheads below show windows, including their frames, aprons and show cases.
10. Finish flooring installed in accordance with Section 805.
11. Partitions dividing portions of stores, offices or similar places occupied by one tenant only and that do not establish a *corridor* serving an *occupant load* of 30 or more shall be permitted to be constructed of *fire-retardant-treated wood*, 1-hour fire-resistance-rated construction or of wood panels or similar light construction up to 6 feet (1829 mm) in height.
12. Stages and platforms constructed in accordance with Sections 410.3 and 410.4, respectively.
13. Combustible *exterior wall coverings*, balconies and similar projections and bay or oriel windows in accordance with Chapter 14.
14. Blocking such as for handrails, millwork, cabinets and window and door frames.
15. Light-transmitting plastics as permitted by Chapter 26.
16. Mastics and caulking materials applied to provide flexible seals between components of *exterior wall* construction.
17. Exterior plastic veneer installed in accordance with Section 2605.2.
18. Nailing or furring strips as permitted by Section 803.11.
19. Heavy timber as permitted by Note c to Table 601 and Sections 602.4.7 and 1406.3.
20. Aggregates, component materials and admixtures as permitted by Section 703.2.2.
21. Sprayed fire-resistant materials and intumescent and mastic fire-resistant coatings, determined on the basis of *fire resistance* tests in accordance with Section 703.2 and installed in accordance with Sections 1705.14 and 1705.15, respectively.
22. Materials used to protect penetrations in fire-resistance-rated assemblies in accordance with Section 714.
23. Materials used to protect joints in fire-resistance-rated assemblies in accordance with Section 715.
24. Materials allowed in the concealed spaces of buildings of Types I and II construction in accordance with Section 718.5.
25. Materials exposed within plenums complying with Section 602 of the *International Mechanical Code*.
26. Wall construction of freezers and coolers of less than 1,000 square feet (92.9 m^2), in size, lined on both sides with noncombustible materials and the building is protected throughout with an *automatic sprinkler system* in accordance with Section 903.3.1.1.

603.1.1 Ducts. The use of nonmetallic ducts shall be permitted where installed in accordance with the limitations of the *International Mechanical Code*.

603.1.2 Piping. The use of combustible piping materials shall be permitted where installed in accordance with the limitations of the *International Mechanical Code* and the *International Plumbing Code*.

603.1.3 Electrical. The use of electrical wiring methods with combustible insulation, tubing, raceways and related components shall be permitted where installed in accordance with the limitations of this code.

CHAPTER 7

FIRE AND SMOKE PROTECTION FEATURES

SECTION 701
GENERAL

701.1 Scope. The provisions of this chapter shall govern the materials, systems and assemblies used for structural *fire resistance* and fire-resistance-rated construction separation of adjacent spaces to safeguard against the spread of fire and smoke within a building and the spread of fire to or from buildings.

701.2 Multiple use fire assemblies. Fire assemblies that serve multiple purposes in a building shall comply with all of the requirements that are applicable for each of the individual fire assemblies.

SECTION 702
DEFINITIONS

702.1 Definitions. The following terms are defined in Chapter 2:

ANNULAR SPACE.

BUILDING ELEMENT.

CEILING RADIATION DAMPER.

COMBINATION FIRE/SMOKE DAMPER.

CORRIDOR DAMPER.

DAMPER.

DRAFTSTOP

F RATING.

FIRE BARRIER.

FIRE DAMPER.

FIRE DOOR.

FIRE DOOR ASSEMBLY.

FIRE PARTITION.

FIRE PROTECTION RATING.

FIRE-RATED GLAZING.

FIRE RESISTANCE.

FIRE-RESISTANCE RATING.

FIRE-RESISTANT JOINT SYSTEM.

FIRE SEPARATION DISTANCE.

FIRE WALL.

FIRE WINDOW ASSEMBLY.

FIREBLOCKING.

FLOOR FIRE DOOR ASSEMBLY.

HORIZONTAL ASSEMBLY.

JOINT.

L RATING.

MEMBRANE PENETRATION.

MEMBRANE-PENETRATION FIRESTOP.

MEMBRANE-PENETRATION FIRESTOP SYSTEM.

MINERAL FIBER.

MINERAL WOOL.

PENETRATION FIRESTOP.

SELF-CLOSING.

SHAFT.

SHAFT ENCLOSURE.

SMOKE BARRIER.

SMOKE COMPARTMENT.

SMOKE DAMPER.

SPLICE.

T RATING.

THROUGH PENETRATION.

THROUGH-PENETRATION FIRESTOP SYSTEM.

SECTION 703
FIRE-RESISTANCE RATINGS AND FIRE TESTS

703.1 Scope. Materials prescribed herein for *fire resistance* shall conform to the requirements of this chapter.

703.2 Fire-resistance ratings. The *fire-resistance rating* of building elements, components or assemblies shall be determined in accordance with the test procedures set forth in ASTM E 119 or UL 263 or in accordance with Section 703.3. The *fire-resistance rating* of penetrations and fire-resistant joint systems shall be determined in accordance Sections 714 and 715, respectively.

703.2.1 Nonsymmetrical wall construction. Interior walls and partitions of nonsymmetrical construction shall be tested with both faces exposed to the furnace, and the assigned *fire-resistance rating* shall be the shortest duration obtained from the two tests conducted in compliance with ASTM E 119 or UL 263. Where evidence is furnished to show that the wall was tested with the least fire-resistant side exposed to the furnace, subject to acceptance of the *building official*, the wall need not be subjected to tests from the opposite side (see Section 705.5 for *exterior walls*).

703.2.2 Combustible components. Combustible aggregates are permitted in gypsum and Portland cement concrete mixtures for fire-resistance-rated construction. Any component material or admixture is permitted in assemblies if the resulting tested assembly meets the fire-resistance test requirements of this code.

703.2.3 Restrained classification. Fire-resistance-rated assemblies tested under ASTM E 119 or UL 263 shall not be considered to be restrained unless evidence satisfactory to the *building official* is furnished by the *registered design professional* showing that the construction qualifies for a restrained classification in accordance with ASTM E 119 or UL 263. Restrained construction shall be identified on the *construction documents*.

703.2.4 Supplemental features. Where materials, systems or devices that have not been tested as part of a fire-resistance-rated assembly are incorporated into the building element, component or assembly, sufficient data shall be made available to the *building official* to show that the required *fire-resistance rating* is not reduced.

703.2.5 Exterior bearing walls. In determining the *fire-resistance rating* of exterior bearing walls, compliance with the ASTM E 119 or UL 263 criteria for unexposed surface temperature rise and ignition of cotton waste due to passage of flame or gases is required only for a period of time corresponding to the required *fire-resistance rating* of an exterior nonbearing wall with the same *fire separation distance*, and in a building of the same group. Where the *fire-resistance rating* determined in accordance with this exception exceeds the *fire-resistance rating* determined in accordance with ASTM E 119 or UL 263, the fire exposure time period, water pressure and application duration criteria for the hose stream test of ASTM E 119 or UL 263 shall be based on the *fire-resistance rating* determined in accordance with this section.

703.3 Methods for determining fire resistance. The application of any of the methods listed in this section shall be based on the fire exposure and acceptance criteria specified in ASTM E 119 or UL 263. The required *fire resistance* of a building element, component or assembly shall be permitted to be established by any of the following methods or procedures:

1. Fire-resistance designs documented in approved sources.
2. Prescriptive designs of fire-resistance-rated building elements, components or assemblies as prescribed in Section 721.
3. Calculations in accordance with Section 722.
4. Engineering analysis based on a comparison of building element, component or assemblies designs having *fire-resistance ratings* as determined by the test procedures set forth in ASTM E 119 or UL 263.
5. Alternative protection methods as allowed by Section 104.11.
6. Fire-resistance designs certified by an approved agency.

703.4 Automatic sprinklers. Under the prescriptive fire-resistance requirements of this code, the *fire-resistance rating* of a building element, component or assembly shall be established without the use of *automatic sprinklers* or any other fire suppression system being incorporated as part of the assembly tested in accordance with the fire exposure, procedures and acceptance criteria specified in ASTM E 119 or UL 263. However, this section shall not prohibit or limit the duties and powers of the *building official* allowed by Sections 104.10 and 104.11.

703.5 Noncombustibility tests. The tests indicated in Sections 703.5.1 and 703.5.2 shall serve as criteria for acceptance of building materials as set forth in Sections 602.2, 602.3 and 602.4 in Type I, II, III and IV construction. The term "noncombustible" does not apply to the flame spread characteristics of *interior finish* or *trim* materials. A material shall not be classified as a noncombustible building construction material if it is subject to an increase in combustibility or flame spread beyond the limitations herein established through the effects of age, moisture or other atmospheric conditions.

703.5.1 Elementary materials. Materials required to be noncombustible shall be tested in accordance with ASTM E 136.

703.5.2 Composite materials. Materials having a structural base of noncombustible material as determined in accordance with Section 703.5.1 with a surfacing not more than 0.125 inch (3.18 mm) thick that has a *flame spread index* not greater than 50 when tested in accordance with ASTM E 84 or UL 723 shall be acceptable as noncombustible materials.

703.6 Fire-resistance-rated glazing. Fire-resistance-rated glazing, when tested in accordance with ASTM E 119 or UL 263 and complying with the requirements of Section 707, shall be permitted. Fire-resistance-rated glazing shall bear a *label* marked in accordance with Table 716.3 issued by an agency and shall be permanently identified on the glazing.

703.7 Marking and identification. Where there is an accessible concealed floor, floor-ceiling or *attic* space, *fire walls*, *fire barriers*, *fire partitions*, *smoke barriers* and smoke partitions or any other wall required to have protected openings or penetrations shall be effectively and permanently identified with signs or stenciling in the concealed space. Such identification shall:

1. Be located within 15 feet (4572 mm) of the end of each wall and at intervals not exceeding 30 feet (9144 mm) measured horizontally along the wall or partition.
2. Include lettering not less than 3 inches (76 mm) in height with a minimum $^3/_8$-inch (9.5 mm) stroke in a contrasting color incorporating the suggested wording, "FIRE AND/OR SMOKE BARRIER—PROTECT ALL OPENINGS," or other wording.

SECTION 704
FIRE-RESISTANCE RATING OF STRUCTURAL MEMBERS

704.1 Requirements. The *fire-resistance ratings* of structural members and assemblies shall comply with this section and the requirements for the type of construction as specified in Table 601. The *fire-resistance ratings* shall be not less than the ratings required for the fire-resistance-rated assemblies supported by the structural members.

Exception: *Fire barriers, fire partitions, smoke barriers* and *horizontal assemblies* as provided in Sections 707.5, 708.4, 709.4 and 711.2, respectively.

704.2 Column protection. Where columns are required to have protection to achieve a *fire-resistance rating*, the entire column shall be provided individual encasement protection by protecting it on all sides for the full column height, including connections to other structural members, with materials having the required *fire-resistance rating*. Where the column extends through a ceiling, the encasement protection shall be continuous from the top of the foundation or floor/ceiling assembly below through the ceiling space to the top of the column.

704.3 Protection of the primary structural frame other than columns. Members of the primary structural frame other than columns that are required to have protection to achieve a *fire-resistance rating* and support more than two floors or one floor and roof, or support a load-bearing wall or a nonload-bearing wall more than two stories high, shall be provided individual encasement protection by protecting them on all sides for the full length, including connections to other structural members, with materials having the required *fire-resistance rating*.

Exception: Individual encasement protection on all sides shall be permitted on all exposed sides provided the extent of protection is in accordance with the required *fire-resistance rating*, as determined in Section 703.

704.4 Protection of secondary members. Secondary members that are required to have protection to achieve a *fire-resistance rating* shall be protected by individual encasement protection.

704.4.1 Light-frame construction. Studs and boundary elements that are integral elements in *load-bearing walls* of light-frame construction shall be permitted to have required *fire-resistance ratings* provided by the membrane protection provided for the *load-bearing wall.*

704.4.2 Horizontal assemblies. *Horizontal assemblies* are permitted to be protected with a membrane or ceiling where the membrane or ceiling provides the required *fire-resistance rating* and is installed in accordance with Section 711.

704.5 Truss protection. The required thickness and construction of fire-resistance-rated assemblies enclosing trusses shall be based on the results of full-scale tests or combinations of tests on truss components or on *approved* calculations based on such tests that satisfactorily demonstrate that the assembly has the required *fire resistance*.

704.6 Attachments to structural members. The edges of lugs, brackets, rivets and bolt heads attached to structural members shall be permitted to extend to within 1 inch (25 mm) of the surface of the fire protection.

704.7 Reinforcing. Thickness of protection for concrete or masonry reinforcement shall be measured to the outside of the reinforcement except that stirrups and spiral reinforcement ties are permitted to project not more than 0.5-inch (12.7 mm) into the protection.

704.8 Embedments and enclosures. Pipes, wires, conduits, ducts or other service facilities shall not be embedded in the required fire protective covering of a structural member that is required to be individually encased.

704.9 Impact protection. Where the fire protective covering of a structural member is subject to impact damage from moving vehicles, the handling of merchandise or other activity, the fire protective covering shall be protected by corner guards or by a substantial jacket of metal or other noncombustible material to a height adequate to provide full protection, but not less than 5 feet (1524 mm) from the finished floor.

Exception: Corner protection is not required on concrete columns in open or enclosed parking garages.

704.10 Exterior structural members. Load-bearing structural members located within the *exterior walls* or on the outside of a building or structure shall be provided with the highest *fire-resistance rating* as determined in accordance with the following:

1. As required by Table 601 for the type of building element based on the type of construction of the building;
2. As required by Table 601 for exterior bearing walls based on the type of construction; and
3. As required by Table 602 for *exterior walls* based on the *fire separation distance*.

704.11 Bottom flange protection. Fire protection is not required at the bottom flange of lintels, shelf angles and plates, spanning not more than 6 feet 4 inches (1931 mm) whether part of the primary structural frame or not, and from the bottom flange of lintels, shelf angles and plates not part of the structural frame, regardless of span.

704.12 Seismic isolation systems. *Fire-resistance ratings* for the isolation system shall meet the *fire-resistance rating* required for the columns, walls or other structural elements in which the isolation system is installed in accordance with Table 601. Isolation systems required to have a *fire-resistance rating* shall be protected with *approved* materials or construction assemblies designed to provide the same degree of *fire resistance* as the structural element in which the system is installed when tested in accordance with ASTM E 119 or UL 263 (see Section 703.2).

Such isolation system protection applied to isolator units shall be capable of retarding the transfer of heat to the isolator unit in such a manner that the required gravity load-carrying capacity of the isolator unit will not be impaired after exposure to the standard time-temperature curve fire test prescribed in ASTM E 119 or UL 263 for a duration not less than that required for the *fire-resistance rating* of the structure element in which the system is installed.

Such isolation system protection applied to isolator units shall be suitably designed and securely installed so as not to dislodge, loosen, sustain damage or otherwise impair its ability to accommodate the seismic movements for which the isolator unit is designed and to maintain its integrity for the purpose of providing the required fire-resistance protection.

704.13 Sprayed fire-resistant materials (SFRM). Sprayed fire-resistant materials (SFRM) shall comply with Sections 704.13.1 through 704.13.5.

704.13.1 Fire-resistance rating. The application of SFRM shall be consistent with the *fire-resistance rating* and the listing, including, but not limited to, minimum thickness and dry density of the applied SFRM, method of application, substrate surface conditions and the use of bonding adhesives, sealants, reinforcing or other materials.

704.13.2 Manufacturer's installation instructions. The application of SFRM shall be in accordance with the manufacturer's installation instructions. The instructions shall include, but are not limited to, substrate temperatures and surface conditions and SFRM handling, storage, mixing, conveyance, method of application, curing and ventilation.

704.13.3 Substrate condition. The SFRM shall be applied to a substrate in compliance with Sections 704.13.3.1 through 704.13.3.2.

704.13.3.1 Surface conditions. Substrates to receive SFRM shall be free of dirt, oil, grease, release agents, loose scale and any other condition that prevents adhesion. The substrates shall be free of primers, paints and encapsulants other than those fire tested and *listed* by a nationally recognized testing agency. Primed, painted or encapsulated steel shall be allowed, provided that testing has demonstrated that required adhesion is maintained.

704.13.3.2 Primers, paints and encapsulants. Where the SFRM is to be applied over primers, paints or encapsulants other than those specified in the listing, the material shall be field tested in accordance with ASTM E 736. Where testing of the SFRM with primers, paints or encapsulants demonstrates that required adhesion is maintained, SFRM shall be permitted to be applied to primed, painted or encapsulated wide flange steel shapes in accordance with the following conditions:

1. The beam flange width does not exceed 12 inches (305 mm); or
2. The column flange width does not exceed 16 inches (400 mm); or
3. The beam or column web depth does not exceed 16 inches (400 mm).
4. The average and minimum bond strength values shall be determined based on a minimum of five bond tests conducted in accordance with ASTM E 736. Bond tests conducted in accordance with ASTM E 736 shall indicate an average bond strength of not less than 80 percent and an individual bond strength of not less than 50 percent, when compared to the bond strength of the SFRM as applied to clean uncoated $^1/_8$-inch-thick (3.2 mm) steel plate.

704.13.4 Temperature. A minimum ambient and substrate temperature of 40°F (4.44°C) shall be maintained during and for not fewer than 24 hours after the application of the SFRM, unless the manufacturer's instructions allow otherwise.

704.13.5 Finished condition. The finished condition of SFRM applied to structural members or assemblies shall not, upon complete drying or curing, exhibit cracks, voids, spalls, delamination or any exposure of the substrate. Surface irregularities of SFRM shall be deemed acceptable.

SECTION 705
EXTERIOR WALLS

705.1 General. *Exterior walls* shall comply with this section.

705.2 Projections. Cornices, eave overhangs, exterior balconies and similar projections extending beyond the exterior wall shall conform to the requirements of this section and Section 1406. Exterior egress balconies and exterior exit stairways and ramps shall comply with Sections 1021 and 1027, respectively. Projections shall not extend any closer to the line used to determine the fire separation distance than shown in Table 705.2.

TABLE 705.2
MINIMUM DISTANCE OF PROJECTION

FIRE SEPARATION DISTANCE (FSD)	MINIMUM DISTANCE FROM LINE USED TO DETERMINE FSD
0 feet to 2 feet	Projections not permitted
Greater than 2 feet to 3 feet	24 inches
Greater than 3 feet to less than 30 feet	24 inches plus 8 inches for every foot of FSD beyond 3 feet or fraction thereof
30 feet or greater	20 feet

For SI: 1 foot = 304.8 mm; 1 inch = 25.4 mm.

Exception: Buildings on the same lot and considered as portions of one building in accordance with Section 705.3 are not required to comply with this section for projections between the buildings.

705.2.1 Type I and II construction. Projections from walls of Type I or II construction shall be of noncombustible materials or combustible materials as allowed by Sections 1406.3 and 1406.4.

705.2.2 Type III, IV or V construction. Projections from walls of Type III, IV or V construction shall be of any *approved* material.

705.2.3 Combustible projections. Combustible projections extending to within 5 feet (1524 mm) of the line used to determine the *fire separation distance* shall be of not less than 1-hour *fire-resistance-rated* construction, Type IV construction, *fire-retardant-treated wood* or as required by Section 1406.3.

Exception: Type VB construction shall be allowed for combustible projections in Group R-3 and U occupancies with a fire separation distance greater than or equal to 5 feet (1524 mm).

705.3 Buildings on the same lot. For the purposes of determining the required wall and opening protection, projections and roof-covering requirements, buildings on the same lot shall be assumed to have an imaginary line between them.

Where a new building is to be erected on the same lot as an existing building, the location of the assumed imaginary line with relation to the existing building shall be such that the *exterior wall* and opening protection of the existing building meet the criteria as set forth in Sections 705.5 and 705.8.

Exceptions:

1. Two or more buildings on the same lot shall be either regulated as separate buildings or shall be considered as portions of one building if the aggregate area of such buildings is within the limits specified in Chapter 5 for a single building. Where the buildings contain different occupancy groups or are of different types of construction, the area shall be that allowed for the most restrictive occupancy or construction.
2. Where an S-2 parking garage of Construction Type I or IIA is erected on the same lot as a Group R-2 building, and there is no *fire separation distance* between these buildings, then the adjoining *exterior walls* between the buildings are permitted to have occupant use openings in accordance with Section 706.8. However, opening protectives in such openings shall only be required in the exterior wall of the S-2 parking garage, not in the exterior wall openings in the R-2 building, and these opening protectives in the exterior wall of the S-2 parking garage shall be not less than $1^1/_2$-hour *fire protection rating*.

705.4 Materials. *Exterior walls* shall be of materials permitted by the building type of construction.

705.5 Fire-resistance ratings. *Exterior walls* shall be fire-resistance rated in accordance with Tables 601 and 602 and this section. The required *fire-resistance rating* of *exterior walls* with a *fire separation distance* of greater than 10 feet (3048 mm) shall be rated for exposure to fire from the inside. The required *fire-resistance rating* of *exterior walls* with a *fire separation distance* of less than or equal to 10 feet (3048 mm) shall be rated for exposure to fire from both sides.

705.6 Structural stability. *Exterior walls* shall extend to the height required by Section 705.11. Interior structural elements that brace the exterior wall but that are not located within the plane of the exterior wall shall have the minimum *fire-resistance rating* required in Table 601 for that structural element. Structural elements that brace the exterior wall but are located outside of the exterior wall or within the plane of the exterior wall shall have the minimum *fire-resistance rating* required in Tables 601 and 602 for the exterior wall.

705.7 Unexposed surface temperature. Where protected openings are not limited by Section 705.8, the limitation on the rise of temperature on the unexposed surface of *exterior walls* as required by ASTM E 119 or UL 263 shall not apply. Where protected openings are limited by Section 705.8, the limitation on the rise of temperature on the unexposed surface of *exterior walls* as required by ASTM E 119 or UL 263 shall not apply provided that a correction is made for radiation from the unexposed *exterior wall* surface in accordance with the following formula:

$$A_e = A + (A_f \times F_{eo}) \qquad \textbf{(Equation 7-1)}$$

where:

A_e = Equivalent area of protected openings.

A = Actual area of protected openings.

A_f = Area of *exterior wall* surface in the *story* under consideration exclusive of openings, on which the temperature limitations of ASTM E 119 or UL 263 for walls are exceeded.

F_{eo} = An "equivalent opening factor" derived from Figure 705.7 based on the average temperature of the unexposed wall surface and the *fire-resistance rating* of the wall.

705.8 Openings. Openings in *exterior walls* shall comply with Sections 705.8.1 through 705.8.6.

705.8.1 Allowable area of openings. The maximum area of unprotected and protected openings permitted in an *exterior wall* in any *story* of a building shall not exceed the percentages specified in Table 705.8.

Exceptions:

1. In other than Group H occupancies, unlimited unprotected openings are permitted in the first *story* above grade plane either:
   - 1.1. Where the wall faces a street and has a *fire separation distance* of more than 15 feet (4572 mm); or
   - 1.2. Where the wall faces an unoccupied space. The unoccupied space shall be on the same lot or dedicated for public use, shall be not less than 30 feet (9144 mm) in width and shall have access from a street by a posted fire lane in accordance with the *International Fire Code*.
2. Buildings whose exterior bearing walls, exterior nonbearing walls and exterior primary structural frame are not required to be fire-resistance rated shall be permitted to have unlimited unprotected openings.

705.8.2 Protected openings. Where openings are required to be protected, *fire doors* and fire shutters shall comply with Section 716.5 and *fire window assemblies* shall comply with Section 716.6.

Exception: Opening protectives are not required where the building is equipped throughout with an *automatic sprinkler system* in accordance with Section 903.3.1.1 and the exterior openings are protected by a water curtain using automatic sprinklers *approved* for that use.

705.8.3 Unprotected openings. Where unprotected openings are permitted, windows and doors shall be constructed of any *approved* materials. Glazing shall conform to the requirements of Chapters 24 and 26.

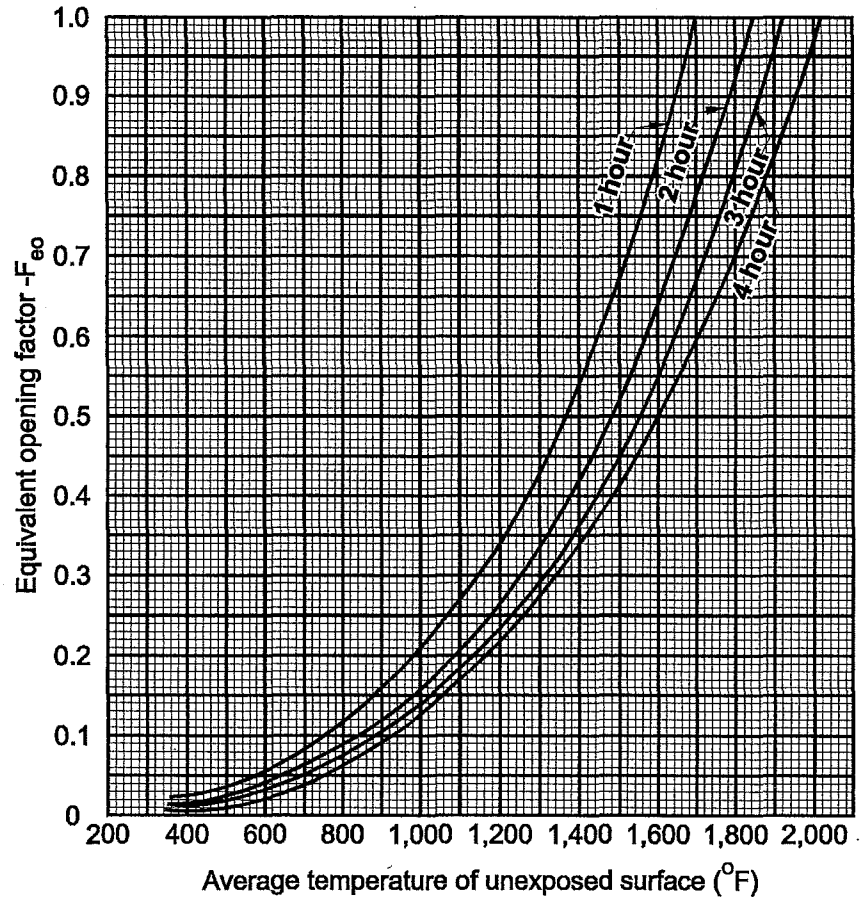

For SI: °C = [(°F) - 32] / 1.8.

FIGURE 705.7
EQUIVALENT OPENING FACTOR

705.8.4 Mixed openings. Where both unprotected and protected openings are located in the *exterior wall* in any *story* of a building, the total area of openings shall be determined in accordance with the following:

$$(A_p/a_p) + (A_u/a_u) \leq 1 \qquad \textbf{(Equation 7-2)}$$

where:

A_p = Actual area of protected openings, or the equivalent area of protected openings, A_e (see Section 705.7).

a_p = Allowable area of protected openings.

A_u = Actual area of unprotected openings.

a_u = Allowable area of unprotected openings.

705.8.5 Vertical separation of openings. Openings in *exterior walls* in adjacent *stories* shall be separated vertically to protect against fire spread on the exterior of the buildings where the openings are within 5 feet (1524 mm) of each other horizontally and the opening in the lower *story* is not a protected opening with a *fire protection rating* of not less than $^3/_4$ hour. Such openings shall be separated vertically not less than 3 feet (914 mm) by spandrel girders, *exterior walls* or other similar assemblies that have a *fire-resistance rating* of not less than 1 hour, rated for exposure to fire from both sides, or by flame barriers that extend horizontally not less than 30 inches (762 mm) beyond the *exterior wall*. Flame barriers shall have a *fire-resistance rating* of not less than 1 hour. The unexposed surface temperature limitations specified in ASTM E 119 or UL 263 shall not apply to the flame barriers or vertical separation unless otherwise required by the provisions of this code.

Exceptions:

1. This section shall not apply to buildings that are three *stories* or less above *grade plane*.
2. This section shall not apply to buildings equipped throughout with an *automatic sprinkler system* in accordance with Section 903.3.1.1 or 903.3.1.2.
3. Open parking garages.

TABLE 705.8
MAXIMUM AREA OF EXTERIOR WALL OPENINGS BASED ON FIRE SEPARATION DISTANCE AND DEGREE OF OPENING PROTECTION

FIRE SEPARATION DISTANCE (feet)	DEGREE OF OPENING PROTECTION	ALLOWABLE AREA[a]
0 to less than 3[b, c, k]	Unprotected, Nonsprinklered (UP, NS)	Not Permitted[k]
	Unprotected, Sprinklered (UP, S)[i]	Not Permitted[k]
	Protected (P)	Not Permitted[k]
3 to less than 5[d, e]	Unprotected, Nonsprinklered (UP, NS)	Not Permitted
	Unprotected, Sprinklered (UP, S)[i]	15%
	Protected (P)	15%
5 to less than 10[e, f, j]	Unprotected, Nonsprinklered (UP, NS)	10%[h]
	Unprotected, Sprinklered (UP, S)[i]	25%
	Protected (P)	25%
10 to less than 15[e, f, g]	Unprotected, Nonsprinklered (UP, NS)	15%[h]
	Unprotected, Sprinklered (UP, S)[i]	45%
	Protected (P)	45%
15 to less than 20[f, g]	Unprotected, Nonsprinklered (UP, NS)	25%
	Unprotected, Sprinklered (UP, S)[i]	75%
	Protected (P)	75%
20 to less than 25[f, g]	Unprotected, Nonsprinklered (UP, NS)	45%
	Unprotected, Sprinklered (UP, S)[i]	No Limit
	Protected (P)	No Limit
25 to less than 30[f, g]	Unprotected, Nonsprinklered (UP, NS)	70%
	Unprotected, Sprinklered (UP, S)[i]	No Limit
	Protected (P)	No Limit
30 or greater	Unprotected, Nonsprinklered (UP, NS)	No Limit
	Unprotected, Sprinklered (UP, S)[i]	No Limit
	Protected (P)	No Limit

For SI: 1 foot = 304.8 mm.
UP, NS = Unprotected openings in buildings not equipped throughout with an automatic sprinkler system in accordance with Section 903.3.1.1.
UP, S = Unprotected openings in buildings equipped throughout with an automatic sprinkler system in accordance with Section 903.3.1.1.
P = Openings protected with an opening protective assembly in accordance with Section 705.8.2.
a. Values indicated are the percentage of the area of the exterior wall, per story.
b. For the requirements for fire walls of buildings with differing heights, see Section 706.6.1.
c. For openings in a fire wall for buildings on the same lot, see Section 706.8.
d. The maximum percentage of unprotected and protected openings shall be 25 percent for Group R-3 occupancies.
e. Unprotected openings shall not be permitted for openings with a fire separation distance of less than 15 feet for Group H-2 and H-3 occupancies.
f. The area of unprotected and protected openings shall not be limited for Group R-3 occupancies, with a fire separation distance of 5 feet or greater.
g. The area of openings in an open parking structure with a fire separation distance of 10 feet or greater shall not be limited.
h. Includes buildings accessory to Group R-3.
i. Not applicable to Group H-1, H-2 and H-3 occupancies.
j. For special requirements for Group U occupancies, see Section 406.3.2.
k. For openings between S-2 parking garage and Group R-2 building, see Section 705.3, Exception 2.

705.8.6 Vertical exposure. For buildings on the same lot, opening protectives having a *fire protection rating* of not less than $^3/_4$ hour shall be provided in every opening that is less than 15 feet (4572 mm) vertically above the roof of an adjacent building or structure based on assuming an imaginary line between them. The opening protectives are required where the *fire separation distance* between the imaginary line and the adjacent building or structure is less than 15 feet (4572 mm).

Exceptions:

1. Opening protectives are not required where the roof assembly of the adjacent building or structure has a *fire-resistance rating* of not less than 1 hour for a minimum distance of 10 feet (3048 mm) from the *exterior wall* facing the imaginary line and the entire length and span of the supporting elements for the fire-resistance-rated roof assembly has a *fire-resistance rating* of not less than 1 hour.
2. Buildings on the same lot and considered as portions of one building in accordance with Section 705.3 are not required to comply with Section 705.8.6.

705.9 Joints. Joints made in or between *exterior walls* required by this section to have a *fire-resistance rating* shall comply with Section 715.

Exception: Joints in *exterior walls* that are permitted to have unprotected openings.

705.9.1 Voids. The void created at the intersection of a floor/ceiling assembly and an exterior curtain wall assembly shall be protected in accordance with Section 715.4.

705.10 Ducts and air transfer openings. Penetrations by air ducts and air transfer openings in fire-resistance-rated *exterior walls* required to have protected openings shall comply with Section 717.

Exception: Foundation vents installed in accordance with this code are permitted.

705.11 Parapets. Parapets shall be provided on *exterior walls* of buildings.

Exceptions: A parapet need not be provided on an *exterior wall* where any of the following conditions exist:

1. The wall is not required to be fire-resistance rated in accordance with Table 602 because of *fire separation distance*.
2. The building has an area of not more than 1,000 square feet (93 m^2) on any floor.
3. Walls that terminate at roofs of not less than 2-hour fire-resistance-rated construction or where the roof, including the deck or slab and supporting construction, is constructed entirely of noncombustible materials.
4. One-hour fire-resistance-rated *exterior walls* that terminate at the underside of the roof sheathing, deck or slab, provided:
   - 4.1. Where the roof/ceiling framing elements are parallel to the walls, such framing and elements supporting such framing shall not be of less than 1-hour fire-resistance-rated construction for a width of 4 feet (1220 mm) for Groups R and U and 10 feet (3048 mm) for other occupancies, measured from the interior side of the wall.
   - 4.2. Where roof/ceiling framing elements are not parallel to the wall, the entire span of such framing and elements supporting such framing shall not be of less than 1-hour fire-resistance-rated construction.
   - 4.3. Openings in the roof shall not be located within 5 feet (1524 mm) of the 1-hour fire-resistance-rated *exterior wall* for Groups R and U and 10 feet (3048 mm) for other occupancies, measured from the interior side of the wall.
   - 4.4. The entire building shall be provided with not less than a Class B roof covering.
5. In Groups R-2 and R-3 where the entire building is provided with a Class C roof covering, the *exterior wall* shall be permitted to terminate at the underside of the roof sheathing or deck in Type III, IV and V construction, provided one or both of the following criteria is met:
   - 5.1. The roof sheathing or deck is constructed of *approved* noncombustible materials or of *fire-retardant-treated wood* for a distance of 4 feet (1220 mm).
   - 5.2. The roof is protected with 0.625-inch (16 mm) Type X gypsum board directly beneath the underside of the roof sheathing or deck, supported by not less than nominal 2-inch (51 mm) ledgers attached to the sides of the roof framing members for a minimum distance of 4 feet (1220 mm).
6. Where the wall is permitted to have not less than 25 percent of the *exterior wall* areas containing unprotected openings based on *fire separation distance* as determined in accordance with Section 705.8.

705.11.1 Parapet construction. Parapets shall have the same *fire-resistance rating* as that required for the supporting wall, and on any side adjacent to a roof surface, shall have noncombustible faces for the uppermost 18 inches (457 mm), including counterflashing and coping materials. The height of the parapet shall be not less than 30 inches (762 mm) above the point where the roof surface and the wall intersect. Where the roof slopes toward a parapet at a slope greater than two units vertical in 12 units horizontal (16.7-percent slope), the parapet shall extend to the same height as any portion of the roof within a *fire separation distance* where protection of wall openings is required, but in no case shall the height be less than 30 inches (762 mm).

SECTION 706
FIRE WALLS

706.1 General. Each portion of a building separated by one or more *fire walls* that comply with the provisions of this section shall be considered a separate building. The extent and location of such *fire walls* shall provide a complete separation. Where a *fire wall* separates occupancies that are required to be separated by a *fire barrier* wall, the most restrictive requirements of each separation shall apply.

706.1.1 Party walls. Any wall located on a *lot line* between adjacent buildings, which is used or adapted for joint service between the two buildings, shall be constructed as a *fire wall* in accordance with Section 706. Party walls shall be constructed without openings and shall create separate buildings.

Exception: Openings in a party wall separating an *anchor building* and a mall shall be in accordance with Section 402.4.2.2.1.

706.2 Structural stability. *Fire walls* shall be designed and constructed to allow collapse of the structure on either side without collapse of the wall under fire conditions. *Fire walls* designed and constructed in accordance with NFPA 221 shall be deemed to comply with this section.

706.3 Materials. *Fire walls* shall be of any *approved* noncombustible materials.

Exception: Buildings of Type V construction.

706.4 Fire-resistance rating. *Fire walls* shall have a *fire-resistance rating* of not less than that required by Table 706.4.

TABLE 706.4
FIRE WALL FIRE-RESISTANCE RATINGS

GROUP	FIRE-RESISTANCE RATING (hours)
A, B, E, H-4, I, R-1, R-2, U	3[a]
F-1, H-3[b], H-5, M, S-1	3
H-1, H-2	4[b]
F-2, S-2, R-3, R-4	2

a. In Type II or V construction, walls shall be permitted to have a 2-hour *fire-resistance rating*.
b. For Group H-1, H-2 or H-3 buildings, also see Sections 415.7 and 415.8.

706.5 Horizontal continuity. *Fire walls* shall be continuous from *exterior wall* to *exterior wall* and shall extend not less than 18 inches (457 mm) beyond the exterior surface of *exterior walls*.

Exceptions:

1. *Fire walls* shall be permitted to terminate at the interior surface of combustible exterior sheathing or siding provided the *exterior wall* has a *fire-resistance rating* of not less than 1 hour for a horizontal distance of not less than 4 feet (1220 mm) on both sides of the *fire wall*. Openings within such *exterior walls* shall be protected by opening protectives having a *fire protection rating* of not less than $^3/_4$ hour.
2. *Fire walls* shall be permitted to terminate at the interior surface of noncombustible exterior sheathing, exterior siding or other noncombustible exterior finishes provided the sheathing, siding or other exterior noncombustible finish extends a horizontal distance of not less than 4 feet (1220 mm) on both sides of the *fire wall*.
3. *Fire walls* shall be permitted to terminate at the interior surface of noncombustible exterior sheathing where the building on each side of the *fire wall* is protected by an *automatic sprinkler system* installed in accordance with Section 903.3.1.1 or 903.3.1.2.

706.5.1 Exterior walls. Where the *fire wall* intersects *exterior walls*, the *fire-resistance rating* and opening protection of the *exterior walls* shall comply with one of the following:

1. The *exterior walls* on both sides of the *fire wall* shall have a 1-hour *fire-resistance rating* with $^3/_4$-hour protection where opening protection is required by Section 705.8. The *fire-resistance rating* of the *exterior wall* shall extend not less than 4 feet (1220 mm) on each side of the intersection of the *fire wall* to *exterior wall*. *Exterior wall* intersections at *fire walls* that form an angle equal to or greater than 180 degrees (3.14 rad) do not need *exterior wall* protection.
2. Buildings or spaces on both sides of the intersecting *fire wall* shall assume to have an imaginary *lot line* at the *fire wall* and extending beyond the exterior of the *fire wall*. The location of the assumed line in relation to the *exterior walls* and the *fire wall* shall be such that the *exterior wall* and opening protection meet the requirements set forth in Sections 705.5 and 705.8. Such protection is not required for *exterior walls* terminating at *fire walls* that form an angle equal to or greater than 180 degrees (3.14 rad).

706.5.2 Horizontal projecting elements. *Fire walls* shall extend to the outer edge of horizontal projecting elements such as balconies, roof overhangs, canopies, marquees and similar projections that are within 4 feet (1220 mm) of the *fire wall*.

Exceptions:

1. Horizontal projecting elements without concealed spaces, provided the *exterior wall* behind and below the projecting element has not less than 1-hour fire-resistance-rated construction for a distance not less than the depth of the projecting element on both sides of the *fire wall*. Openings within such *exterior walls* shall be protected by opening protectives having a *fire protection rating* of not less than $^3/_4$ hour.
2. Noncombustible horizontal projecting elements with concealed spaces, provided a minimum 1-hour fire-resistance-rated wall extends through the concealed space. The projecting element shall be separated from the building by not less than 1-hour fire-resistance-rated construction for a distance on each side of the *fire wall* equal to the depth of the projecting element. The wall is not required to extend under the projecting element where the building *exterior wall* is not less than 1-hour fire-resistance rated for a distance on each side of the *fire wall* equal to the depth of the projecting element. Openings within such *exterior walls* shall be protected by opening protectives having a *fire protection rating* of not less than $^3/_4$ hour.
3. For combustible horizontal projecting elements with concealed spaces, the *fire wall* need only extend through the concealed space to the outer edges of the projecting elements. The *exterior wall* behind and below the projecting element shall be of not less than 1-hour fire-resistance-rated construction for a distance not less than the depth of the projecting elements on both sides of the *fire wall*. Openings within such *exterior walls* shall be protected by opening protectives having a fire-protection rating of not less than $^3/_4$ hour.

706.6 Vertical continuity. *Fire walls* shall extend from the foundation to a termination point not less than 30 inches (762 mm) above both adjacent roofs.

Exceptions:

1. Stepped buildings in accordance with Section 706.6.1.
2. Two-hour fire-resistance-rated walls shall be permitted to terminate at the underside of the roof sheathing, deck or slab, provided:
   - 2.1. The lower roof assembly within 4 feet (1220 mm) of the wall has not less than a 1-hour *fire-resistance rating* and the entire length and span of supporting elements for the rated roof assembly has a *fire-resistance rating* of not less than 1 hour.
   - 2.2. Openings in the roof shall not be located within 4 feet (1220 mm) of the *fire wall.*
   - 2.3. Each building shall be provided with not less than a Class B roof covering.
3. Walls shall be permitted to terminate at the underside of noncombustible roof sheathing, deck or slabs where both buildings are provided with not less than a Class B roof covering. Openings in the roof shall not be located within 4 feet (1220 mm) of the *fire wall.*
4. In buildings of Type III, IV and V construction, walls shall be permitted to terminate at the underside of combustible roof sheathing or decks, provided:
   - 4.1. There are no openings in the roof within 4 feet (1220 mm) of the *fire wall,*
   - 4.2. The roof is covered with a minimum Class B roof covering, and
   - 4.3. The roof sheathing or deck is constructed of *fire-retardant-treated wood* for a distance of 4 feet (1220 mm) on both sides of the wall or the roof is protected with $^5/_8$-inch (15.9 mm) Type X gypsum board directly beneath the underside of the roof sheathing or deck, supported by not less than 2-inch (51 mm) nominal ledgers attached to the sides of the roof framing members for a distance of not less than 4 feet (1220 mm) on both sides of the *fire wall.*
5. In buildings designed in accordance with Section 510.2, *fire walls* located above the 3-hour *horizontal assembly* required by Section 510.2, Item 1 shall be permitted to extend from the top of this *horizontal assembly.*
6. Buildings with sloped roofs in accordance with Section 706.6.2.

706.6.1 Stepped buildings. Where a *fire wall* serves as an *exterior wall* for a building and separates buildings having different roof levels, such wall shall terminate at a point not less than 30 inches (762 mm) above the lower roof level, provided the *exterior wall* for a height of 15 feet (4572 mm) above the lower roof is not less than 1-hour fire-resistance-rated construction from both sides with openings protected by fire assemblies having a *fire protection rating* of not less than $^3/_4$ hour.

Exception: Where the *fire wall* terminates at the underside of the roof sheathing, deck or slab of the lower roof, provided:

1. The lower roof assembly within 10 feet (3048 mm) of the wall has not less than a 1-hour *fire-resistance rating* and the entire length and span of supporting elements for the rated roof assembly has a *fire-resistance rating* of not less than 1 hour.
2. Openings in the lower roof shall not be located within 10 feet (3048 mm) of the *fire wall.*

706.6.2 Buildings with sloped roofs. Where a *fire wall* serves as an interior wall for a building, and the roof on one side or both sides of the fire wall slopes toward the fire wall at a slope greater than two units vertical in 12 units horizontal (2:12), the *fire wall* shall extend to a height equal to the height of the roof located 4 feet (1219 mm) from the *fire wall* plus 30 inches (762 mm). In no case shall the extension of the fire wall be less than 30 inches (762 mm).

706.7 Combustible framing in fire walls. Adjacent combustible members entering into a concrete or masonry *fire wall* from opposite sides shall not have less than a 4-inch (102 mm) distance between embedded ends. Where combustible members frame into hollow walls or walls of hollow units, hollow spaces shall be solidly filled for the full thickness of the wall and for a distance not less than 4 inches (102 mm) above, below and between the structural members, with noncombustible materials *approved* for fireblocking.

706.8 Openings. Each opening through a *fire wall* shall be protected in accordance with Section 716.5 and shall not exceed 156 square feet (15 m^2). The aggregate width of openings at any floor level shall not exceed 25 percent of the length of the wall.

Exceptions:

1. Openings are not permitted in party walls constructed in accordance with Section 706.1.1.
2. Openings shall not be limited to 156 square feet (15 m^2) where both buildings are equipped throughout with an *automatic sprinkler system* installed in accordance with Section 903.3.1.1.

706.9 Penetrations. Penetrations of *fire walls* shall comply with Section 714.

706.10 Joints. Joints made in or between *fire walls* shall comply with Section 715.

706.11 Ducts and air transfer openings. Ducts and air transfer openings shall not penetrate *fire walls.*

Exception: Penetrations by ducts and air transfer openings of *fire walls* that are not on a *lot line* shall be allowed provided the penetrations comply with Section 717. The size

and aggregate width of all openings shall not exceed the limitations of Section 706.8.

SECTION 707
FIRE BARRIERS

707.1 General. *Fire barriers* installed as required elsewhere in this code or the *International Fire Code* shall comply with this section.

707.2 Materials. *Fire barriers* shall be of materials permitted by the building type of construction.

707.3 Fire-resistance rating. The *fire-resistance rating* of *fire barriers* shall comply with this section.

707.3.1 Shaft enclosures. The *fire-resistance rating* of the *fire barrier* separating building areas from a shaft shall comply with Section 713.4.

707.3.2 Interior exit stairway and ramp construction. The *fire-resistance rating* of the *fire barrier* separating building areas from an *interior exit stairway* or *ramp* shall comply with Section 1023.1.

707.3.3 Enclosures for exit access stairways. The *fire-resistance rating* of the *fire barrier* separating building areas from an *exit access stairway* or *ramp* shall comply with Section 713.4.

707.3.4 Exit passageway. The *fire-resistance rating* of the *fire barrier* separating building areas from an *exit* passageway shall comply with Section 1024.3.

707.3.5 Horizontal exit. The *fire-resistance rating* of the separation between building areas connected by a horizontal *exit* shall comply with Section 1026.1.

707.3.6 Atriums. The *fire-resistance rating* of the *fire barrier* separating atriums shall comply with Section 404.6.

707.3.7 Incidental uses. The *fire barrier* separating incidental uses from other spaces in the building shall have a *fire-resistance rating* of not less than that indicated in Table 509.

707.3.8 Control areas. *Fire barriers* separating *control areas* shall have a *fire-resistance rating* of not less than that required in Section 414.2.4.

707.3.9 Separated occupancies. Where the provisions of Section 508.4 are applicable, the *fire barrier* separating mixed occupancies shall have a *fire-resistance rating* of not less than that indicated in Table 508.4 based on the occupancies being separated.

707.3.10 Fire areas. The *fire barriers* or *horizontal assemblies*, or both, separating a single occupancy into different *fire areas* shall have a *fire-resistance rating* of not less than that indicated in Table 707.3.10. The *fire barriers* or *horizontal assemblies*, or both, separating *fire areas* of mixed occupancies shall have a *fire-resistance rating* of not less than the highest value indicated in Table 707.3.10 for the occupancies under consideration.

TABLE 707.3.10
FIRE-RESISTANCE RATING REQUIREMENTS FOR FIRE BARRIER ASSEMBLIES OR HORIZONTAL ASSEMBLIES BETWEEN FIRE AREAS

OCCUPANCY GROUP	FIRE-RESISTANCE RATING (hours)
H-1, H-2	4
F-1, H-3, S-1	3
A, B, E, F-2, H-4, H-5, I, M, R, S-2	2
U	1

707.4 Exterior walls. Where exterior walls serve as a part of a required fire-resistance-rated shaft or stairway or ramp enclosure, or separation, such walls shall comply with the requirements of Section 705 for exterior walls and the fire-resistance-rated enclosure or separation requirements shall not apply.

Exception: Exterior walls required to be fire-resistance rated in accordance with Section 1021 for exterior egress balconies, Section 1023.7 for interior exit stairways and ramps and Section 1027.6 for exterior exit stairways and ramp.

707.5 Continuity. *Fire barriers* shall extend from the top of the foundation or floor/ceiling assembly below to the underside of the floor or roof sheathing, slab or deck above and shall be securely attached thereto. Such *fire barriers* shall be continuous through concealed space, such as the space above a suspended ceiling. Joints and voids at intersections shall comply with Sections 707.8 and 707.9

Exceptions:

1. Shaft enclosures shall be permitted to terminate at a top enclosure complying with Section 713.12.
2. *Interior exit stairway* and *ramp* enclosures required by Section 1023 and *exit access stairway* and *ramp* enclosures required by Section 1019 shall be permitted to terminate at a top enclosure complying with Section 713.12.

707.5.1 Supporting construction. The supporting construction for a *fire barrier* shall be protected to afford the required *fire-resistance rating* of the *fire barrier* supported. Hollow vertical spaces within a *fire barrier* shall be fireblocked in accordance with Section 718.2 at every floor level.

Exceptions:

1. The maximum required *fire-resistance rating* for assemblies supporting *fire barriers* separating tank storage as provided for in Section 415.9.1.2 shall be 2 hours, but not less than required by Table 601 for the building construction type.
2. Supporting construction for 1-hour *fire barriers* required by Table 509 in buildings of Type IIB, IIIB and VB construction is not required to be *fire-resistance rated* unless required by other sections of this code.

707.6 Openings. Openings in a *fire barrier* shall be protected in accordance with Section 716. Openings shall be limited to a maximum aggregate width of 25 percent of the length of the wall, and the maximum area of any single opening shall not exceed 156 square feet (15 m^2). Openings in enclosures for *exit access stairways* and *ramps*, *interior exit stairways* and *ramps* and *exit passageways* shall also comply with Sections 1019, 1023.4 and 1024.5, respectively.

Exceptions:

1. Openings shall not be limited to 156 square feet (15 m^2) where adjoining floor areas are equipped throughout with an automatic sprinkler system in accordance with Section 903.3.1.1.
2. Openings shall not be limited to 156 square feet (15 m^2) or an aggregate width of 25 percent of the length of the wall where the opening protective is a fire door serving enclosures for exit access stairways and ramps, and interior exit stairways and ramps.
3. Openings shall not be limited to 156 square feet (15 m^2) or an aggregate width of 25 percent of the length of the wall where the opening protective has been tested in accordance with ASTM E 119 or UL 263 and has a minimum *fire-resistance rating* not less than the *fire-resistance rating* of the wall.
4. Fire window assemblies permitted in atrium separation walls shall not be limited to a maximum aggregate width of 25 percent of the length of the wall.
5. Openings shall not be limited to 156 square feet (15 m^2) or an aggregate width of 25 percent of the length of the wall where the opening protective is a fire door assembly in a *fire barrier* separating an enclosure for *exit access* stairways and ramps, and interior exit stairways and ramps from an exit passageway in accordance with Section 1023.3.1.

707.7 Penetrations. Penetrations of *fire barriers* shall comply with Section 714.

707.7.1 Prohibited penetrations. Penetrations into enclosures for *exit access stairways* and *ramps*, *interior exit stairways* and *ramps*, and *exit passageways* shall be allowed only where permitted by Sections 1019, 1023.5 and 1024.6, respectively.

707.8 Joints. Joints made in or between *fire barriers*, and joints made at the intersection of *fire barriers* with underside of a fire-resistance-rated floor or roof sheathing, slab or deck above, and the exterior vertical wall intersection shall comply with Section 715.

707.9 Voids at intersections. The voids created at the intersection of a *fire barrier* and a nonfire-resistance-rated roof assembly or a nonfire-resistance-rated exterior wall assembly shall be filled. An approved material or system shall be used to fill the void, and shall be securely installed in or on the intersection for its entire length so as not to dislodge, loosen or otherwise impair its ability to accommodate expected building movements and to retard the passage of fire and hot gases.

707.10 Ducts and air transfer openings. Penetrations in a *fire barrier* by ducts and air transfer openings shall comply with Section 717.

SECTION 708
FIRE PARTITIONS

708.1 General. The following wall assemblies shall comply with this section.

1. Separation walls as required by Section 420.2 for Groups I-1, R-1, R-2 and R-3.
2. Walls separating tenant spaces in *covered and open mall buildings* as required by Section 402.4.2.1.
3. Corridor walls as required by Section 1020.1.
4. Elevator lobby separation as required by Section 3006.2.
5. Egress balconies as required by Section 1019.2

708.2 Materials. The walls shall be of materials permitted by the building type of construction.

708.3 Fire-resistance rating. Fire partitions shall have a *fire-resistance rating* of not less than 1 hour.

Exceptions:

1. Corridor walls permitted to have a $^1/_2$-hour *fire-resistance rating* by Table 1020.1.
2. *Dwelling unit* and *sleeping unit* separations in buildings of Type IIB, IIIB and VB construction shall have *fire-resistance ratings* of not less than $^1/_2$ hour in buildings equipped throughout with an *automatic sprinkler system* in accordance with Section 903.3.1.1.

708.4 Continuity. Fire partitions shall extend from the top of the foundation or floor/ceiling assembly below to the underside of the floor or roof sheathing, slab or deck above or to the fire-resistance-rated floor/ceiling or roof/ceiling assembly above, and shall be securely attached thereto. In combustible construction where the *fire partitions* are not required to be continuous to the sheathing, deck or slab, the space between the ceiling and the sheathing, deck or slab above shall be fireblocked or draftstopped in accordance with Sections 718.2 and 718.3 at the partition line. The supporting construction shall be protected to afford the required *fire-resistance rating* of the wall supported, except for walls separating tenant spaces in *covered and open mall buildings*, walls separating *dwelling units*, walls separating *sleeping units* and *corridor* walls, in buildings of Type IIB, IIIB and VB construction.

Exceptions:

1. The wall need not be extended into the crawl space below where the floor above the crawl space has a minimum 1-hour *fire-resistance rating*.
2. Where the room-side fire-resistance-rated membrane of the *corridor* is carried through to the underside of the floor or roof sheathing, deck or slab of a fire-resistance-rated floor or roof above, the ceiling

of the *corridor* shall be permitted to be protected by the use of ceiling materials as required for a 1-hour fire-resistance-rated floor or roof system.

3. Where the *corridor* ceiling is constructed as required for the *corridor* walls, the walls shall be permitted to terminate at the upper membrane of such ceiling assembly.
4. The fire partitions separating tenant spaces in a *covered or open mall building*, complying with Section 402.4.2.1, are not required to extend beyond the underside of a ceiling that is not part of a fire-resistance-rated assembly. A wall is not required in *attic* or ceiling spaces above tenant separation walls.
5. Attic fireblocking or draftstopping is not required at the partition line in Group R-2 buildings that do not exceed four *stories above grade plane*, provided the *attic* space is subdivided by draftstopping into areas not exceeding 3,000 square feet (279 m^2) or above every two *dwelling units*, whichever is smaller.
6. Fireblocking or draftstopping is not required at the partition line in buildings equipped with an *automatic sprinkler system* installed throughout in accordance with Section 903.3.1.1 or 903.3.1.2, provided that automatic sprinklers are installed in combustible floor/ceiling and roof/ceiling spaces.

708.5 Exterior walls. Where *exterior walls* serve as a part of a required fire-resistance-rated separation, such walls shall comply with the requirements of Section 705 for *exterior walls*, and the fire-resistance-rated separation requirements shall not apply.

Exception: Exterior walls required to be fire-resistance rated in accordance with Section 1021.2 for exterior egress balconies, Section 1023.7 for interior exit stairways and ramps and Section 1027.6 for exterior exit stairways and ramps.

708.6 Openings. Openings in a *fire partition* shall be protected in accordance with Section 716.

708.7 Penetrations. Penetrations of *fire partitions* shall comply with Section 714.

708.8 Joints. Joints made in or between *fire partitions* shall comply with Section 715.

708.9 Ducts and air transfer openings. Penetrations in a *fire partition* by ducts and air transfer openings shall comply with Section 717.

SECTION 709
SMOKE BARRIERS

709.1 General. Vertical and horizontal *smoke barriers* shall comply with this section.

709.2 Materials. *Smoke barriers* shall be of materials permitted by the building type of construction.

709.3 Fire-resistance rating. A 1-hour *fire-resistance rating* is required for *smoke barriers*.

Exception: *Smoke barriers* constructed of minimum 0.10-inch-thick (2.5 mm) steel in Group I-3 buildings.

709.4 Continuity. *Smoke barriers* shall form an effective membrane continuous from the top of the foundation or floor/ceiling assembly below to the underside of the floor or roof sheathing, deck or slab above, including continuity through concealed spaces, such as those found above suspended ceilings, and interstitial structural and mechanical spaces. The supporting construction shall be protected to afford the required *fire-resistance rating* of the wall or floor supported in buildings of other than Type IIB, IIIB or VB construction. *Smoke barrier* walls used to separate smoke compartments shall comply with Section 709.4.1. *Smoke-barrier* walls used to enclose areas of refuge in accordance with Section 1009.6.4 or to enclose elevator lobbies in accordance with Section 405.4.3, 3007.6.2, or 3008.6.2 shall comply with Section 709.4.2.

Exception: *Smoke-barrier* walls are not required in interstitial spaces where such spaces are designed and constructed with ceilings or *exterior walls* that provide resistance to the passage of fire and smoke equivalent to that provided by the *smoke-barrier* walls.

709.4.1 Smoke-barrier walls separating smoke compartments. *Smoke-barrier* walls used to separate smoke compartments shall form an effective membrane continuous from outside wall to outside wall.

709.4.2 Smoke-barrier walls enclosing areas of refuge or elevator lobbies. *Smoke-barrier* walls used to enclose areas of refuge in accordance with Section 1009.6.4, or to enclose elevator lobbies in accordance with Section 405.4.3, 3007.6.2, or 3008.6.2, shall form an effective membrane enclosure that terminates at a *fire barrier* wall having a level of *fire protection rating* not less than 1 hour, another *smoke barrier* wall or an outside wall. A smoke and draft control door assembly as specified in Section 716.5.3.1 shall not be required at each elevator hoistway door opening or at each exit doorway between an area of refuge and the exit enclosure.

709.5 Openings. Openings in a *smoke barrier* shall be protected in accordance with Section 716.

Exceptions:

1. In Group I-1 Condition 2, Group I-2 and *ambulatory care facilities*, where a pair of opposite-swinging doors are installed across a corridor in accordance with Section 709.5.1, the doors shall not be required to be protected in accordance with Section 716. The doors shall be close fitting within operational tolerances, and shall not have a center mullion or undercuts in excess of $^3/_4$ inch (19.1 mm), louvers or grilles. The doors shall have head and jamb stops, and astragals or rabbets at meeting edges. Where permitted by the door manufacturer's listing, positive-latching devices are not required.

2. In Group I-1 Condition 2, Group I-2 and *ambulatory care facilities*, horizontal sliding doors installed in accordance with Section 1010.1.4.3 and protected in accordance with Section 716.

709.5.1 Group I-2 and ambulatory care facilities. In Group I-2 and *ambulatory care facilities*, where doors are installed across a corridor, the doors shall be automatic-closing by smoke detection in accordance with Section 716.5.9.3 and shall have a vision panel with fire-protection-rated glazing materials in fire-protection-rated frames, the area of which shall not exceed that tested.

709.6 Penetrations. Penetrations of *smoke barriers* shall comply with Section 714.

709.7 Joints. Joints made in or between *smoke barriers* shall comply with Section 715.

709.8 Ducts and air transfer openings. Penetrations in a *smoke barrier* by ducts and air transfer openings shall comply with Section 717.

SECTION 710
SMOKE PARTITIONS

710.1 General. Smoke partitions installed as required elsewhere in the code shall comply with this section.

710.2 Materials. The walls shall be of materials permitted by the building type of construction.

710.3 Fire-resistance rating. Unless required elsewhere in the code, smoke partitions are not required to have a *fire-resistance rating*.

710.4 Continuity. Smoke partitions shall extend from the top of the foundation or floor below to the underside of the floor or roof sheathing, deck or slab above or to the underside of the ceiling above where the ceiling membrane is constructed to limit the transfer of smoke.

710.5 Openings. Openings in smoke partitions shall comply with Sections 710.5.1 and 710.5.2.

710.5.1 Windows. Windows in smoke partitions shall be sealed to resist the free passage of smoke or be automatic-closing upon detection of smoke.

710.5.2 Doors. Doors in smoke partitions shall comply with Sections 710.5.2.1 through 710.5.2.3.

710.5.2.1 Louvers. Doors in smoke partitions shall not include louvers.

710.5.2.2 Smoke and draft control doors. Where required elsewhere in the code, doors in smoke partitions shall meet the requirements for a smoke and draft control door assembly tested in accordance with UL 1784. The air leakage rate of the door assembly shall not exceed 3.0 cubic feet per minute per square foot [0.015424 $m^3/(s \cdot m^2)$] of door opening at 0.10 inch (24.9 Pa) of water for both the ambient temperature test and the elevated temperature exposure test. Installation of smoke doors shall be in accordance with NFPA 105.

710.5.2.2.1 Smoke and draft control door labeling. Smoke and draft control doors complying only with UL 1784 shall be permitted to show the letter "S" on the manufacturer's labeling.

710.5.2.3 Self- or automatic-closing doors. Where required elsewhere in the code, doors in smoke partitions shall be self- or automatic-closing by smoke detection in accordance with Section 716.5.9.3.

710.6 Penetrations. The space around penetrating items shall be filled with an *approved* material to limit the free passage of smoke.

710.7 Joints. Joints shall be filled with an *approved* material to limit the free passage of smoke.

710.8 Ducts and air transfer openings. The space around a duct penetrating a smoke partition shall be filled with an *approved* material to limit the free passage of smoke. Air transfer openings in smoke partitions shall be provided with a *smoke damper* complying with Section 717.3.2.2.

Exception: Where the installation of a *smoke damper* will interfere with the operation of a required smoke control system in accordance with Section 909, *approved* alternative protection shall be utilized.

SECTION 711
HORIZONTAL ASSEMBLIES

711.1 General. *Horizontal assemblies* shall comply with Section 711.2. Nonfire-resistance-rated floor and roof assemblies shall comply with Section 711.3.

711.2 Horizontal assemblies. *Horizontal assemblies* shall comply with Sections 711.2.1 through 711.2.6.

711.2.1 Materials. Assemblies shall be of materials permitted by the building type of construction.

711.2.2 Continuity. Assemblies shall be continuous without vertical openings, except as permitted by this section and Section 712.

711.2.3 Supporting construction. The supporting construction shall be protected to afford the required *fire-resistance rating* of the *horizontal assembly* supported.

Exception: In buildings of Type IIB, IIIB or VB construction, the construction supporting the *horizontal assembly* is not required to be *fire-resistance rated* at the following:

1. *Horizontal assemblies* at the separations of incidental uses as specified by Table 509 provided the required *fire-resistance rating* does not exceed 1 hour.
2. *Horizontal assemblies* at the separations of *dwelling units* and *sleeping units* as required by Section 420.3.
3. *Horizontal assemblies* at *smoke barriers* constructed in accordance with Section 709.

711.2.4 Fire-resistance rating. The *fire-resistance rating* of *horizontal assemblies* shall comply with Sections 711.2.4.1 through 711.2.4.6 but shall be not less than that required by the building type of construction.

711.2.4.1 Separating mixed occupancies. Where the *horizontal assembly* separates mixed occupancies, the assembly shall have a *fire-resistance rating* of not less than that required by Section 508.4 based on the occupancies being separated.

711.2.4.2 Separating fire areas. Where the *horizontal assembly* separates a single occupancy into different fire areas, the assembly shall have a *fire-resistance rating* of not less than that required by Section 707.3.10.

711.2.4.3 Dwelling units and sleeping units. *Horizontal assemblies* serving as dwelling or sleeping unit separations in accordance with Section 420.3 shall be not less than 1-hour *fire-resistance-rated* construction.

Exception: *Horizontal assemblies* separating *dwelling units* and *sleeping units* shall be not less than $^1/_2$-hour fire-resistance-rated construction in a building of Type IIB, IIIB and VB construction, where the building is equipped throughout with an *automatic sprinkler system* in accordance with Section 903.3.1.1.

711.2.4.4 Separating smoke compartments. Where the *horizontal assembly* is required to be a *smoke barrier*, the assembly shall comply with Section 709.

711.2.4.5 Separating incidental uses. Where the *horizontal assembly* separates incidental uses from the remainder of the building, the assembly shall have a *fire-resistance rating* of not less than that required by Section 509.

711.2.4.6 Other separations. Where a *horizontal assembly* is required by other sections of this code, the assembly shall have a *fire-resistance rating* of not less than that required by that section.

711.2.5 Ceiling panels. Where the weight of lay-in ceiling panels, used as part of fire-resistance-rated floor/ceiling or roof/ceiling assemblies, is not adequate to resist an upward force of 1 pound per square foot (48 Pa), wire or other *approved* devices shall be installed above the panels to prevent vertical displacement under such upward force.

711.2.6 Unusable space. In 1-hour fire-resistance-rated floor/ceiling assemblies, the ceiling membrane is not required to be installed over unusable crawl spaces. In 1-hour fire-resistance-rated roof assemblies, the floor membrane is not required to be installed where unusable *attic* space occurs above.

711.3 Nonfire-resistance-rated floor and roof assemblies. Nonfire-resistance-rated floor, floor/ceiling, roof and roof/ceiling assemblies shall comply with Sections 711.3.1 and 711.3.2.

711.3.1 Materials. Assemblies shall be of materials permitted by the building type of construction.

711.3.2 Continuity. Assemblies shall be continuous without vertical openings, except as permitted by Section 712.

SECTION 712
VERTICAL OPENINGS

712.1 General. Each vertical opening shall comply in accordance with one of the protection methods in Sections 712.1.1 through 712.1.16.

712.1.1 Shaft enclosures. Vertical openings contained entirely within a shaft enclosure complying with Section 713 shall be permitted.

712.1.2 Individual dwelling unit. Unconcealed vertical openings totally within an individual residential dwelling unit and connecting four stories or less shall be permitted.

712.1.3 Escalator openings. Where a building is equipped throughout with an *automatic sprinkler system* in accordance with Section 903.3.1.1, vertical openings for escalators shall be permitted where protected in accordance with Section 712.1.3.1 or 712.1.3.2.

712.1.3.1 Opening size. Protection by a draft curtain and closely spaced sprinklers in accordance with NFPA 13 shall be permitted where the area of the vertical opening between stories does not exceed twice the horizontal projected area of the escalator. In other than Groups B and M, this application is limited to openings that do not connect more than four stories.

712.1.3.2 Automatic shutters. Protection of the vertical opening by approved shutters at every penetrated floor shall be permitted in accordance with this section. The shutters shall be of noncombustible construction and have a *fire-resistance rating* of not less than 1.5 hours. The shutter shall be so constructed as to close immediately upon the actuation of a smoke detector installed in accordance with Section 907.3.1 and shall completely shut off the well opening. Escalators shall cease operation when the shutter begins to close. The shutter shall operate at a speed of not more than 30 feet per minute (152.4 mm/s) and shall be equipped with a sensitive leading edge to arrest its progress where in contact with any obstacle, and to continue its progress on release there from.

712.1.4 Penetrations. Penetrations, concealed and unconcealed, shall be permitted where protected in accordance with Section 714.

712.1.5 Joints. Joints shall be permitted where complying with Section 712.1.5.1 or 712.1.5.2, as applicable.

712.1.5.1 Joints in or between horizontal assemblies. Joints made in or between *horizontal assemblies* shall comply with Section 715. The void created at the intersection of a floor/ceiling assembly and an exterior curtain wall assembly shall be permitted where protected in accordance with Section 715.4.

712.1.5.2 Joints in or between nonfire-resistance-rated floor assemblies. Joints in or between floor assemblies without a required *fire-resistance rating*

shall be permitted where they comply with one of the following:

1. The joint shall be concealed within the cavity of a wall.
2. The joint shall be located above a ceiling.
3. The joint shall be sealed, treated or covered with an *approved* material or system to resist the free passage of flame and the products of combustion.

Exception: Joints meeting one of the exceptions listed in Section 715.1.

712.1.6 Ducts and air transfer openings. Penetrations by ducts and air transfer openings shall be protected in accordance with Section 717. Grease ducts shall be protected in accordance with the *International Mechanical Code*.

712.1.7 Atriums. In other than Group H occupancies, atriums complying with Section 404 shall be permitted.

712.1.8 Masonry chimney. Approved vertical openings for masonry chimneys shall be permitted where the annular space is fireblocked at each floor level in accordance with Section 718.2.5.

712.1.9 Two-story openings. In other than Groups I-2 and I-3, a vertical opening that is not used as one of the applications listed in this section shall be permitted if the opening complies with all of the items below:

1. Does not connect more than two stories.
2. Does not penetrate a horizontal assembly that separates fire areas or smoke barriers that separate smoke compartments.
3. Is not concealed within the construction of a wall or a floor/ceiling assembly.
4. Is not open to a corridor in Group I and R occupancies.
5. Is not open to a corridor on nonsprinklered floors.
6. Is separated from floor openings and air transfer openings serving other floors by construction conforming to required shaft enclosures.

712.1.10 Parking garages. Vertical openings in parking garages for automobile ramps, elevators and duct systems shall comply with Section 712.1.10.1, 712.1.10.2 or 712.1.10.3, as applicable.

712.1.10.1 Automobile ramps. Vertical openings for automobile ramps in open and enclosed parking garages shall be permitted where constructed in accordance with Sections 406.5 and 406.6, respectively.

712.1.10.2 Elevators. Vertical openings for elevator hoistways in open or enclosed parking garages that serve only the parking garage, and complying with Sections 406.5 and 406.6, respectively, shall be permitted.

712.1.10.3 Duct systems. Vertical openings for mechanical exhaust or supply duct systems in open or enclosed parking garages complying with Sections 406.5 and 406.6, respectively, shall be permitted to be unenclosed where such duct system is contained within and serves only the parking garage.

712.1.11 Mezzanine. Vertical openings between a mezzanine complying with Section 505 and the floor below shall be permitted.

712.1.12 Exit access stairways and ramps. Vertical openings containing *exit access stairways* or *ramps* in accordance with Section 1019 shall be permitted.

712.1.13 Openings. Vertical openings for floor fire doors and access doors shall be permitted where protected by Section 712.1.13.1 or 712.1.13.2.

712.1.13.1 Horizontal fire door assemblies. Horizontal *fire door* assemblies used to protect openings in fire-resistance-rated *horizontal assemblies* shall be tested in accordance with NFPA 288, and shall achieve a *fire-resistance rating* not less than the assembly being penetrated. Horizontal *fire door* assemblies shall be labeled by an *approved agency*. The *label* shall be permanently affixed and shall specify the manufacturer, the test standard and the *fire-resistance rating*.

712.1.13.2 Access doors. Access doors shall be permitted in ceilings of fire-resistance-rated floor/ceiling and roof/ceiling assemblies, provided such doors are tested in accordance with ASTM E 119 or UL 263 as horizontal assemblies and labeled by an approved agency for such purpose. **

712.1.14 Group I-3. In Group I-3 occupancies, vertical openings shall be permitted in accordance with Section 408.5.

712.1.15 Skylights. Skylights and other penetrations through a *fire-resistance-rated* roof deck or slab are permitted to be unprotected, provided that the structural integrity of the *fire-resistance-rated* roof assembly is maintained. Unprotected skylights shall not be permitted in roof assemblies required to be *fire-resistance rated* in accordance with Section 705.8.6. The supporting construction shall be protected to afford the required *fire-resistance rating* of the *horizontal assembly* supported.

712.1.16 Openings otherwise permitted. Vertical openings shall be permitted where allowed by other sections of this code.

SECTION 713
SHAFT ENCLOSURES

713.1 General. The provisions of this section shall apply to shafts required to protect openings and penetrations through floor/ceiling and roof/ceiling assemblies. *Interior exit stairways* and *ramps* shall be enclosed in accordance with Section 1023.

713.2 Construction. Shaft enclosures shall be constructed as *fire barriers* in accordance with Section 707 or horizontal assemblies in accordance with Section 711, or both.

713.3 Materials. The shaft enclosure shall be of materials permitted by the building type of construction.

713.4 Fire-resistance rating. Shaft enclosures shall have a *fire-resistance rating* of not less than 2 hours where connecting four *stories* or more, and not less than 1 hour where connecting less than four *stories*. The number of *stories* connected by the shaft enclosure shall include any basements but not any *mezzanines*. Shaft enclosures shall have a *fire-resistance rating* not less than the floor assembly penetrated, but need not exceed 2 hours. Shaft enclosures shall meet the requirements of Section 703.2.1.

713.5 Continuity. Shaft enclosures shall be constructed as *fire barriers* in accordance with Section 707 or *horizontal assemblies* constructed in accordance with Section 711, or both, and shall have continuity in accordance with Section 707.5 for *fire barriers* or Section 711.2.2 for *horizontal assemblies,* as applicable.

713.6 Exterior walls. Where *exterior walls* serve as a part of a required shaft enclosure, such walls shall comply with the requirements of Section 705 for *exterior walls* and the fire-resistance-rated enclosure requirements shall not apply.

Exception: Exterior walls required to be fire-resistance rated in accordance with Section 1021.2 for exterior egress balconies, Section 1023.7 for interior *exit* stairways and ramps and Section 1027.6 for exterior *exit* stairways and ramps.

713.7 Openings. Openings in a shaft enclosure shall be protected in accordance with Section 716 as required for *fire barriers*. Doors shall be self- or automatic-closing by smoke detection in accordance with Section 716.5.9.3.

713.7.1 Prohibited openings. Openings other than those necessary for the purpose of the shaft shall not be permitted in shaft enclosures.

713.8 Penetrations. Penetrations in a shaft enclosure shall be protected in accordance with Section 714 as required for *fire barriers*. Structural elements, such as beams or joists, where protected in accordance with Section 714 shall be permitted to penetrate a shaft enclosure.

713.8.1 Prohibited penetrations. Penetrations other than those necessary for the purpose of the shaft shall not be permitted in shaft enclosures.

713.9 Joints. Joints in a shaft enclosure shall comply with Section 715.

713.10 Duct and air transfer openings. Penetrations of a shaft enclosure by ducts and air transfer openings shall comply with Section 717.

713.11 Enclosure at the bottom. Shafts that do not extend to the bottom of the building or structure shall comply with one of the following:

1. They shall be enclosed at the lowest level with construction of the same *fire-resistance rating* as the lowest floor through which the shaft passes, but not less than the rating required for the shaft enclosure.
2. They shall terminate in a room having a use related to the purpose of the shaft. The room shall be separated from the remainder of the building by *fire barriers* constructed in accordance with Section 707 or *horizontal assemblies* constructed in accordance with Section 711, or both. The *fire-resistance rating* and opening protectives shall be not less than the protection required for the shaft enclosure.
3. They shall be protected by *approved fire dampers* installed in accordance with their listing at the lowest floor level within the shaft enclosure.

Exceptions:

1. The fire-resistance-rated room separation is not required, provided there are no openings in or penetrations of the shaft enclosure to the interior of the building except at the bottom. The bottom of the shaft shall be closed off around the penetrating items with materials permitted by Section 718.3.1 for draftstopping, or the room shall be provided with an *approved automatic sprinkler system.*
2. A shaft enclosure containing a waste or linen chute shall not be used for any other purpose and shall discharge in a room protected in accordance with Section 713.13.4.
3. The fire-resistance-rated room separation and the protection at the bottom of the shaft are not required provided there are no combustibles in the shaft and there are no openings or other penetrations through the shaft enclosure to the interior of the building.

713.12 Enclosure at top. A shaft enclosure that does not extend to the underside of the roof sheathing, deck or slab of the building shall be enclosed at the top with construction of the same *fire-resistance rating* as the topmost floor penetrated by the shaft, but not less than the *fire-resistance rating* required for the shaft enclosure.

713.13 Waste and linen chutes and incinerator rooms. Waste and linen chutes shall comply with the provisions of NFPA 82, Chapter 5 and shall meet the requirements of Sections 713.13.1 through 713.13.6. Incinerator rooms shall meet the provisions of Sections 713.13.4 through 713.13.5.

Exception: Chutes serving and contained within a single dwelling unit.

713.13.1 Waste and linen. A shaft enclosure containing a recycling, or waste or linen chute shall not be used for any other purpose and shall be enclosed in accordance with Section 713.4. Openings into the shaft, from access rooms and discharge rooms, shall be protected in accordance with this section and Section 716. Openings into chutes shall not be located in *corridors*. Doors into chutes shall be self-closing. Discharge doors shall be self- or automatic-closing upon the actuation of a smoke detector in accordance with Section 716.5.9.3, except that heat-activated closing devices shall be permitted between the shaft and the discharge room.

713.13.2 Materials. A shaft enclosure containing a waste, recycling, or linen chute shall be constructed of materials as permitted by the building type of construction.

713.13.3 Chute access rooms. Access openings for waste or linen chutes shall be located in rooms or compartments enclosed by not less than 1-hour *fire barriers* constructed in accordance with Section 707 or *horizontal assemblies*

constructed in accordance with Section 711, or both. Openings into the access rooms shall be protected by opening protectives having a *fire protection rating* of not less than $^3/_4$ hour. Doors shall be self- or automatic-closing upon the detection of smoke in accordance with Section 716.5.9.3.

713.13.4 Chute discharge room. Waste or linen chutes shall discharge into an enclosed room separated by *fire barriers* with a *fire-resistance rating* not less than the required fire rating of the shaft enclosure and constructed in accordance with Section 707 or *horizontal assemblies* constructed in accordance with Section 711, or both. Openings into the discharge room from the remainder of the building shall be protected by opening protectives having a *fire protection rating* equal to the protection required for the shaft enclosure. Doors shall be self- or automatic-closing upon the detection of smoke in accordance with Section 716.5.9.3. Waste chutes shall not terminate in an incinerator room. Waste and linen rooms that are not provided with chutes need only comply with Table 509.

713.13.5 Incinerator room. Incinerator rooms shall comply with Table 509.

713.13.6 Automatic sprinkler system. An *approved automatic sprinkler system* shall be installed in accordance with Section 903.2.11.2.

713.14 Elevator, dumbwaiter and other hoistways. Elevator, dumbwaiter and other hoistway enclosures shall be constructed in accordance with Section 713 and Chapter 30.

*

SECTION 714
PENETRATIONS

714.1 Scope. The provisions of this section shall govern the materials and methods of construction used to protect *through penetrations* and *membrane penetrations* of *horizontal assemblies* and fire-resistance-rated wall assemblies.

714.1.1 Ducts and air transfer openings. Penetrations of fire-resistance-rated walls by ducts that are not protected with *dampers* shall comply with Sections 714.2 through 714.3.3. Penetrations of *horizontal assemblies* not protected with a shaft as permitted by Section 717.6, and not required to be protected with fire *dampers* by other sections of this code, shall comply with Sections 714.4 through 714.5.2. Ducts and air transfer openings that are protected with *dampers* shall comply with Section 717.

714.2 Installation details. Where sleeves are used, they shall be securely fastened to the assembly penetrated. The space between the item contained in the sleeve and the sleeve itself and any space between the sleeve and the assembly penetrated shall be protected in accordance with this section. Insulation and coverings on or in the penetrating item shall not penetrate the assembly unless the specific material used has been tested as part of the assembly in accordance with this section.

714.3 Fire-resistance-rated walls. Penetrations into or through *fire walls*, *fire barriers*, *smoke barrier* walls and *fire partitions* shall comply with Sections 714.3.1 through 714.3.3. Penetrations in *smoke barrier* walls shall also comply with Section 714.4.4.

714.3.1 Through penetrations. Through penetrations of fire-resistance-rated walls shall comply with Section 714.3.1.1 or 714.3.1.2.

Exception: Where the penetrating items are steel, ferrous or copper pipes, tubes or conduits, the *annular space* between the penetrating item and the fire-resistance-rated wall is permitted to be protected by either of the following measures:

1. In concrete or masonry walls where the penetrating item is a maximum 6-inch (152 mm) nominal diameter and the area of the opening through the wall does not exceed 144 square inches (0.0929 m^2), concrete, grout or mortar is permitted where installed the full thickness of the wall or the thickness required to maintain the *fire-resistance rating*.
2. The material used to fill the *annular space* shall prevent the passage of flame and hot gases sufficient to ignite cotton waste when subjected to ASTM E 119 or UL 263 time-temperature fire conditions under a minimum positive pressure differential of 0.01 inch (2.49 Pa) of water at the location of the penetration for the time period equivalent to the *fire-resistance rating* of the construction penetrated.

714.3.1.1 Fire-resistance-rated assemblies. Penetrations shall be installed as tested in an *approved* fire-resistance-rated assembly.

714.3.1.2 Through-penetration firestop system. *Through penetrations* shall be protected by an *approved* penetration firestop system installed as tested in accordance with ASTM E 814 or UL 1479, with a minimum positive pressure differential of 0.01 inch (2.49 Pa) of water and shall have an F rating of not less than the required *fire-resistance rating* of the wall penetrated.

714.3.2 Membrane penetrations. Membrane penetrations shall comply with Section 714.3.1. Where walls or partitions are required to have a *fire-resistance rating*, recessed fixtures shall be installed such that the required fire resistance will not be reduced.

Exceptions:

1. Membrane penetrations of maximum 2-hour fire-resistance-rated walls and partitions by steel electrical boxes that do not exceed 16 square inches (0.0 103 m^2) in area, provided the aggregate area of the openings through the membrane does not exceed 100 square inches (0.0645 m^2) in any 100 square feet (9.29 m^2) of wall area. The *annular space* between the wall membrane and the box shall not exceed $^1/_8$ inch (3.2 mm). Such boxes on

opposite sides of the wall or partition shall be separated by one of the following:

1.1. By a horizontal distance of not less than 24 inches (610 mm) where the wall or partition is constructed with individual noncommunicating stud cavities;

1.2. By a horizontal distance of not less than the depth of the wall cavity where the wall cavity is filled with cellulose loose-fill, rockwool or slag mineral wool insulation;

1.3. By solid fireblocking in accordance with Section 718.2.1;

1.4. By protecting both outlet boxes with *listed* putty pads; or

1.5. By other *listed* materials and methods.

2. Membrane penetrations by *listed* electrical boxes of any material, provided such boxes have been tested for use in fire-resistance-rated assemblies and are installed in accordance with the instructions included in the listing. The *annular space* between the wall membrane and the box shall not exceed $^1/_8$ inch (3.2 mm) unless *listed* otherwise. Such boxes on opposite sides of the wall or partition shall be separated by one of the following:

2.1. By the horizontal distance specified in the listing of the electrical boxes;

2.2. By solid fireblocking in accordance with Section 718.2.1;

2.3. By protecting both boxes with *listed* putty pads; or

2.4. By other *listed* materials and methods.

3. Membrane penetrations by electrical boxes of any size or type, that have been *listed* as part of a wall opening protective material system for use in fire-resistance-rated assemblies and are installed in accordance with the instructions included in the listing.

4. Membrane penetrations by boxes other than electrical boxes, provided such penetrating items and the *annular space* between the wall membrane and the box, are protected by an *approved membrane penetration* firestop system installed as tested in accordance with ASTM E 814 or UL 1479, with a minimum positive pressure differential of 0.01 inch (2.49 Pa) of water, and shall have an F and T rating of not less than the required *fire-resistance rating* of the wall penetrated and be installed in accordance with their listing.

5. The *annular space* created by the penetration of an automatic sprinkler, provided it is covered by a metal escutcheon plate.

6. Membrane penetrations of maximum 2-hour *fire resistance-rated* walls and partitions by steel electrical boxes that exceed 16 square inches (0.0 103 m^2) in area, or steel electrical boxes of any size having an aggregate area through the membrane exceeding 100 square inches (0.0645 m^2) in any 100 square feet (9.29 m^2) of wall area, provided such penetrating items are protected by listed putty pads or other listed materials and methods, and installed in accordance with the listing.

714.3.3 Dissimilar materials. Noncombustible penetrating items shall not connect to combustible items beyond the point of firestopping unless it can be demonstrated that the fire-resistance integrity of the wall is maintained.

714.4 Horizontal assemblies. Penetrations of a *fire-resistance-rated* floor, floor/ceiling assembly or the ceiling membrane of a roof/ceiling assembly not required to be enclosed in a shaft by Section 712.1 shall be protected in accordance with Sections 714.4.1 through 714.4.4.

714.4.1 Through penetrations. Through penetrations of *horizontal assemblies* shall comply with Section 714.4.1.1 or 714.4.1.2.

Exceptions:

1. Penetrations by steel, ferrous or copper conduits, pipes, tubes or vents or concrete or masonry items through a single fire-resistance-rated floor assembly where the *annular space* is protected with materials that prevent the passage of flame and hot gases sufficient to ignite cotton waste when subjected to ASTM E 119 or UL 263 time-temperature fire conditions under a minimum positive pressure differential of 0.01 inch (2.49 Pa) of water at the location of the penetration for the time period equivalent to the *fire-resistance rating* of the construction penetrated. Penetrating items with a maximum 6-inch (152 mm) nominal diameter shall not be limited to the penetration of a single fire-resistance-rated floor assembly, provided the aggregate area of the openings through the assembly does not exceed 144 square inches (92 900 mm^2) in any 100 square feet (9.3 m^2) of floor area.

2. Penetrations in a single concrete floor by steel, ferrous or copper conduits, pipes, tubes or vents with a maximum 6-inch (152 mm) nominal diameter, provided the concrete, grout or mortar is installed the full thickness of the floor or the thickness required to maintain the *fire-resistance rating*. The penetrating items shall not be limited to the penetration of a single concrete floor, provided the area of the opening through each floor does not exceed 144 square inches (92 900 mm^2).

3. Penetrations by *listed* electrical boxes of any material, provided such boxes have been tested for use in fire-resistance-rated assemblies and installed in accordance with the instructions included in the listing.

714.4.1.1 Installation. *Through penetrations* shall be installed as tested in the *approved* fire-resistance-rated assembly.

714.4.1.2 Through-penetration firestop system. *Through penetrations* shall be protected by an *approved through-penetration firestop system* installed and tested in accordance with ASTM E 814 or UL 1479, with a minimum positive pressure differential of 0.01 inch of water (2.49 Pa). The system shall have an F rating/T rating of not less than 1 hour but not less than the required rating of the floor penetrated.

Exceptions:

1. Floor penetrations contained and located within the cavity of a wall above the floor or below the floor do not require a T rating.
2. Floor penetrations by floor drains, tub drains or shower drains contained and located within the concealed space of a horizontal assembly do not require a T rating.
3. Floor penetrations of maximum 4-inch (102 mm) nominal diameter penetrating directly into metal-enclosed electrical power switchgear do not require a T rating.

714.4.2 Membrane penetrations. Penetrations of membranes that are part of a *horizontal assembly* shall comply with Section 714.4.1.1 or 714.4.1.2. Where floor/ceiling assemblies are required to have a *fire-resistance rating*, recessed fixtures shall be installed such that the required *fire resistance* will not be reduced.

Exceptions:

1. *Membrane penetrations* by steel, ferrous or copper conduits, pipes, tubes or vents, or concrete or masonry items where the *annular space* is protected either in accordance with Section 714.4.1 or to prevent the free passage of flame and the products of combustion. The aggregate area of the openings through the membrane shall not exceed 100 square inches (64 500 mm^2) in any 100 square feet (9.3 m^2) of ceiling area in assemblies tested without penetrations.
2. Ceiling *membrane penetrations* of maximum 2-hour *horizontal assemblies* by steel electrical boxes that do not exceed 16 square inches (10 323 mm^2) in area, provided the aggregate area of such penetrations does not exceed 100 square inches (44 500 mm^2) in any 100 square feet (9.29 m^2) of ceiling area, and the *annular space* between the ceiling membrane and the box does not exceed $^1/_8$ inch (3.2 mm).
3. *Membrane penetrations* by electrical boxes of any size or type, that have been *listed* as part of an opening protective material system for use in *horizontal assemblies* and are installed in accordance with the instructions included in the listing.
4. *Membrane penetrations* by *listed* electrical boxes of any material, provided such boxes have been tested for use in fire-resistance-rated assemblies and are installed in accordance with the instructions included in the listing. The *annular space* between the ceiling membrane and the box shall not exceed $^1/_8$ inch (3.2 mm) unless *listed* otherwise.
5. The *annular space* created by the penetration of a fire sprinkler, provided it is covered by a metal escutcheon plate.
6. Noncombustible items that are cast into concrete building elements and that do not penetrate both top and bottom surfaces of the element.
7. The ceiling membrane of 1- and 2-hour *fire-resistance-rated horizontal assemblies* is permitted to be interrupted with the double wood top plate of a wall assembly that is sheathed with Type X gypsum wallboard, provided that all penetrating items through the double top plates are protected in accordance with Section 714.4.1.1 or 714.4.1.2 and the ceiling membrane is tight to the top plates.

714.4.3 Dissimilar materials. Noncombustible penetrating items shall not connect to combustible materials beyond the point of firestopping unless it can be demonstrated that the fire-resistance integrity of the *horizontal assembly* is maintained.

714.4.4 Penetrations in smoke barriers. Penetrations in *smoke barriers* shall be protected by an approved *through-penetration firestop system* installed and tested in accordance with the requirements of UL 1479 for air leakage. The *L rating* of the system measured at 0.30 inch (7.47 Pa) of water in both the ambient temperature and elevated temperature tests shall not exceed:

1. 5.0 cfm per square foot (0.025 $m^3/s \cdot m^2$) of penetration opening for each *through-penetration firestop system*; or
2. A total cumulative leakage of 50 cfm (0.024 m^3/s) for any 100 square feet (9.3 m^2) of wall area, or floor area.

714.5 Nonfire-resistance-rated assemblies. Penetrations of nonfire-resistance-rated floor or floor/ceiling assemblies or the ceiling membrane of a nonfire-resistance-rated roof/ceiling assembly shall meet the requirements of Section 713 or shall comply with Section 714.5.1 or 714.5.2.

714.5.1 Noncombustible penetrating items. Noncombustible penetrating items that connect not more than five *stories* are permitted, provided that the *annular space* is filled to resist the free passage of flame and the products of combustion with an *approved* noncombustible material or with a fill, void or cavity material that is tested and classified for use in *through-penetration firestop systems*.

714.5.2 Penetrating items. Penetrating items that connect not more than two *stories* are permitted, provided that the *annular space* is filled with an *approved* material to resist the free passage of flame and the products of combustion.

SECTION 715
FIRE-RESISTANT JOINT SYSTEMS

715.1 General. Joints installed in or between fire-resistance-rated walls, floor or floor/ceiling assemblies and roofs or roof/ceiling assemblies shall be protected by an approved *fire-resistant joint system* designed to resist the passage of fire for a time period not less than the required *fire-resistance rating* of the wall, floor or roof in or between which the system is installed. *Fire-resistant joint systems* shall be tested in accordance with Section 715.3.

Exception: *Fire-resistant joint systems* shall not be required for joints in all of the following locations:

1. Floors within a single *dwelling unit.*
2. Floors where the joint is protected by a shaft enclosure in accordance with Section 713.
3. Floors within atriums where the space adjacent to the atrium is included in the volume of the atrium for smoke control purposes.
4. Floors within malls.
5. Floors and ramps within open and enclosed parking garages or structures constructed in accordance with Sections 406.5 and 406.6, respectively.
6. Mezzanine floors.
7. Walls that are permitted to have unprotected openings.
8. Roofs where openings are permitted.
9. Control joints not exceeding a maximum width of 0.625 inch (15.9 mm) and tested in accordance with ASTM E 119 or UL 263.

715.1.1 Curtain wall assembly. The void created at the intersection of a floor/ceiling assembly and an exterior curtain wall assembly shall be protected in accordance with Section 715.4.

715.2 Installation. A *fire-resistant joint system* shall be securely installed in accordance with the listing criteria in or on the joint for its entire length so as not to dislodge, loosen or otherwise impair its ability to accommodate expected building movements and to resist the passage of fire and hot gases.

715.3 Fire test criteria. *Fire-resistant joint systems* shall be tested in accordance with the requirements of either ASTM E 1966 or UL 2079. Nonsymmetrical wall joint systems shall be tested with both faces exposed to the furnace, and the assigned *fire-resistance rating* shall be the shortest duration obtained from the two tests. Where evidence is furnished to show that the wall was tested with the least fire-resistant side exposed to the furnace, subject to acceptance of the *building official*, the wall need not be subjected to tests from the opposite side.

Exception: For *exterior walls* with a horizontal *fire separation distance* greater than 5 feet (1524 mm), the joint system shall be required to be tested for interior fire exposure only.

715.4 Exterior curtain wall/floor intersection. Where fire resistance-rated floor or floor/ceiling assemblies are required, voids created at the intersection of the exterior curtain wall assemblies and such floor assemblies shall be sealed with an *approved* system to prevent the interior spread of fire. Such systems shall be securely installed and tested in accordance with ASTM E 2307 to provide an *F rating* for a time period not less than the *fire-resistance rating* of the floor assembly. Height and fire-resistance requirements for curtain wall spandrels shall comply with Section 705.8.5.

Exception: Voids created at the intersection of the exterior curtain wall assemblies and such floor assemblies where the vision glass extends to the finished floor level shall be permitted to be sealed with an approved material to prevent the interior spread of fire. Such material shall be securely installed and capable of preventing the passage of flame and hot gases sufficient to ignite cotton waste where subjected to ASTM E 119 time-temperature fire conditions under a minimum positive pressure differential of 0.01 inch (0.254 mm) of water column (2.5 Pa) for the time period not less than the *fire-resistance rating* of the floor assembly.

715.4.1 Exterior curtain wall/nonfire-resistance-rated floor assembly intersections. Voids created at the intersection of exterior curtain wall assemblies and nonfire-resistance-rated floor or floor/ceiling assemblies shall be sealed with an *approved* material or system to retard the interior spread of fire and hot gases between *stories*.

715.4.2 Exterior curtain wall/vertical fire barrier intersections. Voids created at the intersection of nonfire-resistance-rated exterior curtain wall assemblies and *fire barriers* shall be filled. An approved material or system shall be used to fill the void and shall be securely installed in or on the intersection for its entire length so as not to dislodge, loosen or otherwise impair its ability to accommodate expected building movements and to retard the passage of fire and hot gases.

715.5 Spandrel wall. Height and fire-resistance requirements for curtain wall spandrels shall comply with Section 705.8.5. Where Section 705.8.5 does not require a fire-resistance-rated spandrel wall, the requirements of Section 715.4 shall still apply to the intersection between the spandrel wall and the floor.

715.6 Fire-resistant joint systems in smoke barriers. *Fire-resistant joint systems* in *smoke barriers*, and joints at the intersection of a horizontal *smoke barrier* and an exterior curtain wall, shall be tested in accordance with the requirements of UL 2079 for air leakage. The *L rating* of the joint system shall not exceed 5 cfm per linear foot (0.00775 m^3/s m) of joint at 0.30 inch (7.47 Pa) of water for both the ambient temperature and elevated temperature tests.

SECTION 716
OPENING PROTECTIVES

716.1 General. Opening protectives required by other sections of this code shall comply with the provisions of this section.

716.2 Fire-resistance-rated glazing. *Fire-resistance-rated* glazing tested as part of a *fire-resistance-rated* wall or floor/

ceiling assembly in accordance with ASTM E 119 or UL 263 and labeled in accordance with Section 703.6 shall not otherwise be required to comply with this section where used as part of a wall or floor/ceiling assembly. *Fire-resistance-rated* glazing shall be permitted in fire door and *fire window assemblies* where tested and installed in accordance with their listings and where in compliance with the requirements of this section.

716.3 Marking fire-rated glazing assemblies. *Fire-rated glazing* assemblies shall be marked in accordance with Tables 716.3, 716.5 and 716.6.

716.3.1 Fire-rated glazing identification. For *fire-rated glazing*, the *label* shall bear the identification required in Tables 716.3 and 716.5. "D" indicates that the glazing is permitted to be used in *fire door* assemblies and that the glazing meets the fire protection requirements of NFPA 252. "H" shall indicate that the glazing meets the hose stream requirements of NFPA 252. "T" shall indicate that the glazing meets the temperature requirements of Section 716.5.5.1. The placeholder "XXX" represents the fire-rating period, in minutes.

716.3.2 Fire-protection-rated glazing identification. For *fire-protection-rated* glazing, the *label* shall bear the following identification required in Tables 716.3 and 716.6: "OH – XXX." "OH" indicates that the glazing meets both the fire protection and the hose-stream requirements of NFPA 257 or UL 9 and is permitted to be used in fire window openings. The placeholder "XXX" represents the fire-rating period, in minutes.

716.3.3 Fire-rated glazing that exceeds the code requirements. *Fire-rated glazing* assemblies marked as complying with hose stream requirements (H) shall be permitted in applications that do not require compliance with hose stream requirements. *Fire-rated glazing* assemblies marked as complying with temperature rise requirements (T) shall be permitted in applications that do not require compliance with temperature rise requirements. *Fire-rated glazing* assemblies marked with ratings (XXX) that exceed the ratings required by this code shall be permitted.

716.4 Alternative methods for determining fire protection ratings. The application of any of the alternative methods *listed* in this section shall be based on the fire exposure and acceptance criteria specified in NFPA 252, NFPA 257 or UL 9. The required *fire resistance* of an opening protective shall be permitted to be established by any of the following methods or procedures:

1. Designs documented in *approved* sources.
2. Calculations performed in an *approved* manner.
3. Engineering analysis based on a comparison of opening protective designs having *fire protection ratings* as determined by the test procedures set forth in NFPA 252, NFPA 257 or UL 9.
4. Alternative protection methods as allowed by Section 104.11.

716.5 Fire door and shutter assemblies. Approved *fire door* and fire shutter assemblies shall be constructed of any material or assembly of component materials that conforms to the test requirements of Section 716.5.1, 716.5.2 or 716.5.3 and the *fire protection rating* indicated in Table 716.5. *Fire door* frames with transom lights, sidelights or both shall be permitted in accordance with Section 716.5.6. *Fire door* assemblies and shutters shall be installed in accordance with the provisions of this section and NFPA 80.

Exceptions:

1. Labeled protective assemblies that conform to the requirements of this section or UL 10A, UL 14B and UL 14C for tin-clad *fire door* assemblies.
2. Floor *fire door* assemblies in accordance with Section 712.1.13.1.

716.5.1 Side-hinged or pivoted swinging doors. *Fire door* assemblies with side-hinged and pivoted swinging doors shall be tested in accordance with NFPA 252 or UL 10C. After 5 minutes into the NFPA 252 test, the neutral pressure level in the furnace shall be established at 40 inches (1016 mm) or less above the sill.

716.5.2 Other types of assemblies. *Fire door* assemblies with other types of doors, including swinging elevator doors, horizontal sliding fire door assemblies, and fire shutter assemblies, bottom and side-hinged chute intake doors, and top-hinged chute discharge doors, shall be tested in accordance with NFPA 252 or UL 10B. The pressure in the furnace shall be maintained as nearly equal to the atmospheric pressure as possible. Once established, the pressure shall be maintained during the entire test period.

716.5.3 Door assemblies in corridors and smoke barriers. *Fire door* assemblies required to have a minimum *fire protection rating* of 20 minutes where located in *corridor*

TABLE 716.3
MARKING FIRE-RATED GLAZING ASSEMBLIES

FIRE TEST STANDARD	MARKING	DEFINITION OF MARKING
ASTM E 119 or UL 263	W	Meets wall assembly criteria.
NFPA 257 or UL 9	OH	Meets fire window assembly criteria including the hose stream test.
NFPA 252 or UL 10B or UL 10C	D	Meets fire door assembly criteria.
	H	Meets fire door assembly hose stream test.
	T	Meets 450°F temperature rise criteria for 30 minutes
	XXX	The time in minutes of the fire resistance or fire protection rating of the glazing assembly.

For SI: °C = [(°F) - 32]/1.8.

walls or *smoke barrier* walls having a *fire-resistance rating* in accordance with Table 716.5 shall be tested in accordance with NFPA 252 or UL 10C without the hose stream test.

Exceptions:

1. Viewports that require a hole not larger than 1 inch (25 mm) in diameter through the door, have not less than a 0.25-inch-thick (6.4 mm) glass disc and the holder is of metal that will not melt out where subject to temperatures of 1,700°F (927°C).
2. *Corridor* door assemblies in occupancies of Group I-2 shall be in accordance with Section 407.3.1.
3. Unprotected openings shall be permitted for *corridors* in multitheater complexes where each motion picture auditorium has not fewer than one-half of its required *exit* or *exit access doorways* opening directly to the exterior or into an *exit* passageway.
4. Horizontal sliding doors in *smoke barriers* that comply with Sections 408.6 and 408.8.4 in occupancies in Group I-3.

716.5.3.1 Smoke and draft control. *Fire door* assemblies shall meet the requirements for a smoke and draft control door assembly tested in accordance with UL 1784. The air leakage rate of the door assembly shall not exceed 3.0 cubic feet per minute per square foot (0.01524 $m^3/s \cdot m^2$) of door opening at 0.10 inch (24.9 Pa) of water for both the ambient temperature and elevated temperature tests. Louvers shall be prohibited. Installation of smoke doors shall be in accordance with NFPA 105.

716.5.3.2 Glazing in door assemblies. In a 20-minute *fire door assembly*, the glazing material in the door itself shall have a minimum fire-protection-rated glazing of 20 minutes and shall be exempt from the hose stream test. Glazing material in any other part of the door assembly, including transom lights and sidelights, shall be tested in accordance with NFPA 257 or UL 9, including the hose stream test, in accordance with Section 716.6.

716.5.4 Door assemblies in other fire partitions. *Fire door* assemblies required to have a minimum fire protection rating of 20 minutes where located in other *fire partitions* having a fire-resistance rating of 0.5 hour in accordance with Table 716.5 shall be tested in accordance with NFPA 252, UL 10B or UL 10C with the hose stream test.

716.5.5 Doors in interior exit stairways and ramps and exit passageways. *Fire door* assemblies in interior exit stairways and ramps and exit passageways shall have a maximum transmitted temperature rise of not more than 450°F (250°C) above ambient at the end of 30 minutes of standard fire test exposure.

Exception: The maximum transmitted temperature rise is not required in buildings equipped throughout with an *automatic sprinkler system* installed in accordance with Section 903.3.1.1 or 903.3.1.2.

716.5.5.1 Glazing in doors. Fire-protection-rated glazing in excess of 100 square inches (0.065 m^2) is not permitted. Fire-resistance-rated glazing in excess of 100 square inches (0.065 m^2) shall be permitted in door *fire doors*. Listed *fire-resistance-rated* glazing in a *fire door* shall have a maximum transmitted temperature rise in accordance with Section 716.5.5 when the *fire door* is tested in accordance with NFPA 252, UL 10B or UL 10C.

716.5.6 Fire door frames with transom lights and sidelights. Door frames with transom lights, sidelights or both, shall be permitted where a $^3/_4$-hour *fire protection rating* or less is required in accordance with Table 716.5. *Fire door* frames with transom lights, sidelights, or both, installed with fire-resistance-rated glazing tested as an assembly in accordance with ASTM E 119 or UL 263 shall be permitted where a fire protection rating exceeding $^3/_4$ hour is required in accordance with Table 716.5.

716.5.7 Labeled protective assemblies. *Fire door* assemblies shall be labeled by an *approved agency*. The *labels* shall comply with NFPA 80, and shall be permanently affixed to the door or frame.

716.5.7.1 Fire door labeling requirements. *Fire doors* shall be labeled showing the name of the manufacturer or other identification readily traceable back to the manufacturer, the name or trademark of the third-party inspection agency, the *fire protection rating* and, where required for *fire doors* in interior exit stairways and ramps and exit passageways by Section 716.5.5, the maximum transmitted temperature end point. Smoke and draft control doors complying with UL 1784 shall be labeled as such and shall comply with Section 716.5.7.3. Labels shall be approved and permanently affixed. The label shall be applied at the factory or location where fabrication and assembly are performed.

716.5.7.1.1 Light kits, louvers and components. Listed light kits and louvers and their required preparations shall be considered as part of the labeled door where such installations are done under the listing program of the third-party agency. *Fire doors* and door assemblies shall be permitted to consist of components, including glazing, vision light kits and hardware that are listed or classified and labeled for such use by different third-party agencies.

TABLE 716.5
OPENING FIRE PROTECTION ASSEMBLIES, RATINGS AND MARKINGS

TYPE OF ASSEMBLY	REQUIRED WALL ASSEMBLY RATING (hours)	MINIMUM FIRE DOOR AND FIRE SHUTTER ASSEMBLY RATING (hours)	DOOR VISION PANEL SIZE[b]	FIRE-RATED GLAZING MARKING DOOR VISION PANEL[d]	MINIMUM SIDELIGHT/ TRANSOM ASSEMBLY RATING (hours)		FIRE-RATED GLAZING MARKING SIDELIGHT/TRANSOM PANEL	
					Fire protection	Fire resistance	Fire protection	Fire resistance
Fire walls and fire barriers having a required fire-resistance rating greater than 1 hour	4	3	See Note b	D-H-W-240	Not Permitted	4	Not Permitted	W-240
	3	3[a]	See Note b	D-H-W-180	Not Permitted	3	Not Permitted	W-180
	2	$1^1/_2$	100 sq. in.	≤100 sq. in. = D-H-90 >100 sq. in.= D-H-W-90	Not Permitted	2	Not Permitted	W-120
	$1^1/_2$	$1^1/_2$	100 sq. in.	≤100 sq. in. = D-H-90 >100 sq. in.= D-H-W-90	Not Permitted	$1^1/_2$	Not Permitted	W-90
Enclosures for shafts, interior exit stairways and interior exit ramps.	2	$1^1/_2$	100 sq. in.	≤100 sq. in. = D-H-90 > 100 sq. in.= D-H-T-W-90	Not Permitted	2	Not Permitted	W-120
Horizontal exits in fire walls[e]	4	3	100 sq. in.	≤100 sq. in. = D-H-180 > 100 sq. in.= D-H-W-240	Not Permitted	4	Not Permitted	W-240
	3	3[a]	100 sq. in.	≤100 sq. in. = D-H-180 > 100 sq. in.= D-H-W-180	Not Permitted	3	Not Permitted	W-180
Fire barriers having a required fire-resistance rating of 1 hour: Enclosures for shafts, exit access stairways, exit access ramps, interior exit stairways and interior exit ramps; and exit passageway walls	1	1	100 sq. in.[c]	≤100 sq. in. = D-H-60 >100 sq. in.= D-H-T-W-60	Not Permitted	1	Not Permitted	W-60
					Fire protection			
Other fire barriers	1	$^3/_4$	Maximum size tested	D-H	$^3/_4$		D-H	
Fire partitions: Corridor walls	1	$^1/_3$[b]	Maximum size tested	D-20	$^3/_4$[b]		D-H-OH-45	
	0.5	$^1/_3$[b]	Maximum size tested	D-20	$^1/_3$		D-H-OH-20	
Other fire partitions	1	$^3/_4$	Maximum size tested	D-H-45	$^3/_4$		D-H-45	
	0.5	$^1/_3$	Maximum size tested	D-H-20	$^1/_3$		D-H-20	

(continued)

TABLE 716.5—continued
OPENING FIRE PROTECTION ASSEMBLIES, RATINGS AND MARKINGS

TYPE OF ASSEMBLY	REQUIRED WALL ASSEMBLY RATING (hours)	MINIMUM FIRE DOOR AND FIRE SHUTTER ASSEMBLY RATING (hours)	DOOR VISION PANEL SIZE[b]	FIRE-RATED GLAZING MARKING DOOR VISION PANEL[d]	MINIMUM SIDELIGHT/ TRANSOM ASSEMBLY RATING (hours)		FIRE-RATED GLAZING MARKING SIDELIGHT/TRANSOM PANEL	
					Fire protection	Fire resistance	Fire protection	Fire resistance
Exterior walls	3	$1^1/_2$	100 sq. in.[b]	≤100 sq. in. = D-H-90 >100 sq. in = D-H-W-90	Not Permitted	3	Not Permitted	W-180
	2	$1^1/_2$	100 sq. in.[b]	≤100 sq. in. = D-H-90 >100 sq. in.= D-H-W-90	Not Permitted	2	Not Permitted	W-120
					Fire protection			
	1	$^3/_4$	Maximum size tested	D-H-45	$^3/_4$		D-H-45	
Smoke barriers					Fire protection			
	1	$^1/_3$	Maximum size tested	D-20	$^3/_4$		D-H-OH-45	

For SI: 1 square inch = 645.2 mm.

a. Two doors, each with a fire protection rating of $1^1/_2$ hours, installed on opposite sides of the same opening in a fire wall, shall be deemed equivalent in fire protection rating to one 3-hour fire door.

b. Fire-resistance-rated glazing tested to ASTM E 119 in accordance with Section 716.2 shall be permitted, in the maximum size tested.

c. Except where the building is equipped throughout with an automatic sprinkler and the fire-rated glazing meets the criteria established in Section 716.5.5.

d. Under the column heading "Fire-rated glazing marking door vision panel," W refers to the *fire-resistance rating* of the glazing, not the frame.

e. See Section 716.5.8.1.2.1.

716.5.7.2 Oversized doors. Oversized *fire doors* shall bear an oversized *fire door label* by an *approved agency* or shall be provided with a certificate of inspection furnished by an *approved* testing agency. Where a certificate of inspection is furnished by an *approved* testing agency, the certificate shall state that the door conforms to the requirements of design, materials and construction, but has not been subjected to the fire test.

716.5.7.3 Smoke and draft control door labeling requirements. Smoke and draft control doors complying with UL 1784 shall be labeled in accordance with Section 716.5.7.1 and shall show the letter "S" on the fire-rating *label* of the door. This marking shall indicate that the door and frame assembly are in compliance where *listed* or labeled gasketing is installed.

716.5.7.4 Fire door frame labeling requirements. *Fire door* frames shall be labeled showing the names of the manufacturer and the third-party inspection agency.

716.5.7.5 Fire door operator labeling requirements. *Fire door* operators for horizontal sliding doors shall be labeled and listed for use with the assembly.

716.5.8 Glazing material. *Fire-rated glazing* and *fire-resistance-rated* glazing conforming to the opening protection requirements in Section 716.5 shall be permitted in *fire door* assemblies.

716.5.8.1 Size limitations. *Fire-resistance-rated* glazing shall comply with the size limitations in Section 716.5.8.1.1. Fire-protection-rated glazing shall comply with the size limitations of NFPA 80, and as provided in Section 716.5.8.1.2.

716.5.8.1.1 Fire-resistance-rated glazing in door assemblies in fire walls and fire barriers rated greater than 1 hour. Fire-resistance-rated glazing tested to ASTM E 119 or UL 263 and NFPA 252, UL 10B or UL 10C shall be permitted in *fire door assemblies* located in *fire walls* and in *fire barriers* in accordance with Table 716.5 to the maximum size tested and in accordance with their listings.

716.5.8.1.2 Fire-protection-rated glazing in door assemblies in fire walls and fire barriers rated greater than 1 hour. Fire-protection-rated glazing shall be prohibited in *fire walls* and *fire barriers* except as provided in Sections 716.5.8.1.2.1 and 716.5.8.1.2.2.

716.5.8.1.2.1 Horizontal exits. Fire-protection-rated glazing shall be permitted as vision panels in *self-closing* swinging *fire door* assemblies serving as horizontal exits in *fire walls* where limited to 100 square inches (0.065 m^2) with no dimension exceeding 10 inches (0.3 mm).

716.5.8.1.2.2 Fire barriers. Fire-protection-rated glazing shall be permitted in *fire doors* having a $1^1/_2$-hour *fire protection rating* intended for installation in *fire barriers*, where limited to 100 square inches (0.065 m^2).

716.5.8.2 Elevator, stairway and ramp protectives. Approved fire-protection-rated glazing used in *fire door* assemblies in elevator, stairway and ramp enclosures shall be so located as to furnish clear vision of the passageway or approach to the elevator, stairway or ramp.

716.5.8.3 Labeling. *Fire-rated glazing* shall bear a *label* or other identification showing the name of the manufacturer, the test standard and information required in Table 716.3 that shall be issued by an *approved agency* and shall be permanently identified on the glazing.

716.5.8.4 Safety glazing. *Fire-protection-rated* glazing and *fire-resistance-rated* glazing installed in *fire door* assemblies shall comply with the safety glazing requirements of Chapter 24 where applicable.

716.5.9 Door closing. *Fire doors* shall be latching and self- or automatic-closing in accordance with this section.

Exceptions:

1. *Fire doors* located in common walls separating *sleeping units* in Group R-1 shall be permitted without automatic- or *self-closing* devices.
2. The elevator car doors and the associated hoistway enclosure doors at the floor level designated for recall in accordance with Section 3003.2 shall be permitted to remain open during Phase I emergency recall operation.

716.5.9.1 Latch required. Unless otherwise specifically permitted, single *fire doors* and both leaves of pairs of side-hinged swinging *fire doors* shall be provided with an active latch bolt that will secure the door when it is closed.

716.5.9.1.1 Chute intake door latching. Chute intake doors shall be positive latching, remaining latched and closed in the event of latch spring failure during a fire emergency.

716.5.9.2 Automatic-closing fire door assemblies. Automatic-closing *fire door* assemblies shall be *self-closing* in accordance with NFPA 80.

716.5.9.3 Smoke-activated doors. Automatic-closing doors installed in the following locations shall be automatic-closing by the actuation of smoke detectors installed in accordance with Section 907.3 or by loss of power to the smoke detector or hold-open device. Doors that are automatic-closing by smoke detection shall not have more than a 10-second delay before the door starts to close after the smoke detector is actuated:

1. Doors installed across a *corridor*.
2. Doors installed in the enclosures of *exit access stairways* and *ramps* in accordance with Sections 1019 and 1023, respectively.
3. Doors that protect openings in *exits* or *corridors* required to be of fire-resistance-rated construction.
4. Doors that protect openings in walls that are capable of resisting the passage of smoke in accordance with Section 509.4.
5. Doors installed in *smoke barriers* in accordance with Section 709.5.
6. Doors installed in *fire partitions* in accordance with Section 708.6.
7. Doors installed in a *fire wall* in accordance with Section 706.8.
8. Doors installed in shaft enclosures in accordance with Section 713.7.
9. Doors installed in waste and linen chutes, discharge openings and access and discharge rooms in accordance with Section 713.13. Loading doors installed in waste and linen chutes shall meet the requirements of Sections 716.5.9 and 716.5.9.1.1.
10. Doors installed in the walls for compartmentation of underground buildings in accordance with Section 405.4.2.
11. Doors installed in the elevator lobby walls of underground buildings in accordance with Section 405.4.3.
12. Doors installed in smoke partitions in accordance with Section 710.5.2.3.

716.5.9.4 Doors in pedestrian ways. Vertical sliding or vertical rolling steel *fire doors* in openings through which pedestrians travel shall be heat activated or activated by smoke detectors with alarm verification.

716.5.10 Swinging fire shutters. Where fire shutters of the swinging type are installed in exterior openings, not less than one row in every three vertical rows shall be arranged to be readily opened from the outside, and shall be identified by distinguishing marks or letters not less than 6 inches (152 mm) high.

716.5.11 Rolling fire shutters. Where fire shutters of the rolling type are installed, such shutters shall include *approved* automatic-closing devices.

716.6 Fire-protection-rated glazing. Glazing in *fire window assemblies* shall be fire protection rated in accordance with this section and Table 716.6. Glazing in *fire door* assemblies shall comply with Section 716.5.8. Fire-protection-rated glazing in fire window assemblies shall be tested in accordance with and shall meet the acceptance criteria of NFPA 257 or UL 9. Fire-protection-rated glazing shall comply with NFPA 80. Openings in nonfire-resistance-rated *exterior wall* assemblies that require protection in accordance with Section 705.3, 705.8, 705.8.5 or 705.8.6 shall have a fire protection rating of not less than $^3/_4$ hour. Fire-protection-rated glazing in 0.5-hour fire-resistance-rated partitions is permitted to have an 0.33-hour fire protection rating.

716.6.1 Testing under positive pressure. NFPA 257 or UL 9 shall evaluate fire-protection-rated glazing under positive pressure. Within the first 10 minutes of a test, the pressure in the furnace shall be adjusted so not less than two-thirds of the test specimen is above the neutral pressure plane, and the neutral pressure plane shall be maintained at that height for the balance of the test.

716.6.2 Nonsymmetrical glazing systems. Nonsymmetrical fire-protection-rated glazing systems in *fire partitions*, *fire barriers* or in *exterior walls* with a *fire separation distance* of 5 feet (1524 mm) or less pursuant to Section 705 shall be tested with both faces exposed to the furnace, and

the assigned *fire protection rating* shall be the shortest duration obtained from the two tests conducted in compliance with NFPA 257 or UL 9.

716.6.3 Safety glazing. *Fire-protection-rated* glazing and *fire-resistance-rated* glazing installed in *fire window assemblies* shall comply with the safety glazing requirements of Chapter 24 where applicable.

716.6.4 Glass and glazing. Glazing in *fire window assemblies* shall be fire-protection-rated glazing installed in accordance with and complying with the size limitations set forth in NFPA 80.

716.6.5 Installation. Fire-protection-rated glazing shall be in the fixed position or be automatic-closing and shall be installed in *approved* frames.

716.6.6 Window mullions. Metal mullions that exceed a nominal height of 12 feet (3658 mm) shall be protected with materials to afford the same *fire-resistance rating* as required for the wall construction in which the protective is located.

716.6.7 Interior fire window assemblies. Fire-protection-rated glazing used in *fire window assemblies* located in *fire partitions* and *fire barriers* shall be limited to use in assemblies with a maximum *fire-resistance rating* of 1 hour in accordance with this section.

716.6.7.1 Where $^3/_4$-hour fire protection window assemblies permitted. Fire-protection-rated glazing requiring 45-minute opening protection in accordance with Table 716.6 shall be limited to *fire partitions* designed in accordance with Section 708 and *fire barriers* utilized in the applications set forth in Sections 707.3.6 and 707.3.8 where the *fire-resistance rating* does not exceed 1 hour. Fire-resistance-rated glazing assemblies tested in accordance with ASTM E 119 or UL 263 shall not be subject to the limitations of this section.

716.6.7.2 Area limitations. The total area of the glazing in fire-protection-rated window assemblies shall not exceed 25 percent of the area of a common wall with any room.

716.6.7.3 Where $^1/_3$-hour fire-protection window assemblies permitted. Fire-protection-rated glazing shall be permitted in window assemblies tested to NFPA 257 or UL 9 in *smoke barriers* and *fire partitions* requiring $^1/_3$-hour opening protection in accordance with Table 716.6.

716.6.8 Labeling requirements. Fire-protection-rated glazing shall bear a label or other identification showing the name of the manufacturer, the test standard and information required in Section 716.3.2 and Table 716.6 that shall be issued by an approved agency and permanently identified on the glazing.

SECTION 717
DUCTS AND AIR TRANSFER OPENINGS

717.1 General. The provisions of this section shall govern the protection of duct penetrations and air transfer openings in assemblies required to be protected and duct penetrations in nonfire-resistance-rated floor assemblies.

717.1.1 Ducts and air transfer openings. Ducts transitioning horizontally between shafts shall not require a shaft enclosure provided that the duct penetration into each associated shaft is protected with *dampers* complying with this section.

717.1.2 Ducts that penetrate fire-resistance-rated assemblies without dampers. Ducts that penetrate fire-resistance-rated assemblies and are not required by this section to have *dampers* shall comply with the requirements of Sections 714.2 through 714.3.3. Ducts that penetrate *horizontal assemblies* not required to be contained within a shaft and not required by this section to have

TABLE 716.6
FIRE WINDOW ASSEMBLY FIRE PROTECTION RATINGS

TYPE OF WALL ASSEMBLY	REQUIRED WALL ASSEMBLY RATING (hours)	MINIMUM FIRE WINDOW ASSEMBLY RATING (hours)	FIRE-RATED GLAZING MARKING
Interior walls			
Fire walls	All	NP[a]	W-XXX[b]
Fire barriers	>1	NP[a]	W-XXX[b]
	1	NP[a]	W-XXX[b]
Incidental use areas (Section 707.3.7), Mixed occupancy separations (Section 707.3.9)	1	$^3/_4$	OH-45 or W-60
Fire partitions	1	$^3/_4$	OH-45 or W-60
	0.5	$^1/_3$	OH-20 or W-30
Smoke barriers	1	$^3/_4$	OH-45 or W-60
Exterior walls	>1	$1^1/_2$	OH-90 or W-XXX[b]
	1	$^3/_4$	OH-45 or W-60
	0.5	$^1/_3$	OH-20 or W-30
Party wall	All	NP	Not Applicable

NP = Not Permitted.

a. Not permitted except fire-resistance-rated glazing assemblies tested to ASTM E 119 or UL 263, as specified in Section 716.2.

b. XXX = The fire rating duration period in minutes, which shall be equal to the *fire-resistance rating* required for the wall assembly.

dampers shall comply with the requirements of Sections 714.4 through 714.5.2.

717.1.2.1 Ducts that penetrate nonfire-resistance-rated assemblies. The space around a duct penetrating a nonfire-resistance-rated floor assembly shall comply with Section 717.6.3.

717.2 Installation. *Fire dampers, smoke dampers, combination fire/smoke dampers* and *ceiling radiation dampers* located within air distribution and smoke control systems shall be installed in accordance with the requirements of this section, the manufacturer's instructions and the *dampers'* listing.

717.2.1 Smoke control system. Where the installation of a *fire damper* will interfere with the operation of a required smoke control system in accordance with Section 909, *approved* alternative protection shall be utilized. Where mechanical systems including ducts and *dampers* utilized for normal building ventilation serve as part of the smoke control system, the expected performance of these systems in smoke control mode shall be addressed in the rational analysis required by Section 909.4.

717.2.2 Hazardous exhaust ducts. *Fire dampers* for hazardous exhaust duct systems shall comply with the *International Mechanical Code.*

717.3 Damper testing, ratings and actuation. *Damper* testing, ratings and actuation shall be in accordance with Sections 717.3.1 through 717.3.3.

717.3.1 Damper testing. Dampers shall be listed and labeled in accordance with the standards in this section.

1. *Fire dampers* shall comply with the requirements of UL 555. Only *fire dampers* and *ceiling radiation dampers* labeled for use in dynamic systems shall be installed in heating, ventilation and air-conditioning systems designed to operate with fans on during a fire.
2. Smoke dampers shall comply with the requirements of UL 555S.
3. Combination fire/smoke dampers shall comply with the requirements of both UL 555 and UL 555S.
4. Ceiling radiation dampers shall comply with the requirements of UL 555C or shall be tested as part of a fire-resistance-rated floor/ceiling or roof/ceiling assembly in accordance with ASTM E119 or UL 263.
5. *Corridor dampers* shall comply with requirements of both UL 555 and UL 555S. *Corridor dampers* shall demonstrate acceptable closure performance when subjected to 150 feet per minute (0.76 mps) velocity across the face of the damper during the UL 555 fire exposure test.

717.3.2 Damper rating. *Damper* ratings shall be in accordance with Sections 717.3.2.1 through 717.3.2.4.

717.3.2.1 Fire damper ratings. *Fire dampers* shall have the minimum *fire protection rating* specified in Table 717.3.2.1 for the type of penetration.

TABLE 717.3.2.1
FIRE DAMPER RATING

TYPE OF PENETRATION	MINIMUM DAMPER RATING (hours)
Less than 3-hour fire-resistance-rated assemblies	1.5
3-hour or greater fire-resistance-rated assemblies	3

717.3.2.2 Smoke damper ratings. *Smoke damper* leakage ratings shall be Class I or II. Elevated temperature ratings shall be not less than 250°F (121°C).

717.3.2.3 Combination fire/smoke damper ratings. *Combination fire/smoke dampers* shall have the minimum *fire protection rating* specified for *fire dampers* in Table 717.3.2.1 for the type of penetration and shall have a minimum *smoke damper* rating as specified in Section 717.3.2.2.

717.3.2.4 Corridor damper ratings. *Corridor dampers* shall have the following minimum ratings:

1. One hour *fire-resistance rating.*
2. Class I or II leakage rating as specified in Section 717.3.2.2.

717.3.3 Damper actuation. *Damper* actuation shall be in accordance with Sections 717.3.3.1 through 717.3.3.5 as applicable.

717.3.3.1 Fire damper actuation device. The *fire damper* actuation device shall meet one of the following requirements:

1. The operating temperature shall be approximately 50°F (10°C) above the normal temperature within the duct system, but not less than 160°F (71°C).
2. The operating temperature shall be not more than 350°F (177°C) where located in a smoke control system complying with Section 909.

717.3.3.2 Smoke damper actuation. The *smoke damper* shall close upon actuation of a *listed* smoke detector or detectors installed in accordance with Section 907.3 and one of the following methods, as applicable:

1. Where a *smoke damper* is installed within a duct, a smoke detector shall be installed inside the duct or outside the duct with sampling tubes protruding into the duct. The detector or tubes within the duct shall be within 5 feet (1524 mm) of the *damper.* Air outlets and inlets shall not be located between the detector or tubes and the *damper.* The detector shall be *listed* for the air velocity, temperature and humidity anticipated at the point where it is installed. Other than in mechanical smoke control systems, *dampers* shall be closed upon fan shutdown where local smoke detectors require a minimum velocity to operate.
2. Where a *smoke damper* is installed above *smoke barrier* doors in a *smoke barrier,* a spot-type detector shall be installed on either side of the

smoke barrier door opening. The detector shall be listed for releasing service if used for direct interface with the damper.

3. Where a *smoke damper* is installed within an air transfer opening in a wall, a spot-type detector shall be installed within 5 feet (1524 mm) horizontally of the *damper*. The detector shall be listed for releasing service if used for direct interface with the damper.
4. Where a *smoke damper* is installed in a *corridor* wall or ceiling, the *damper* shall be permitted to be controlled by a smoke detection system installed in the *corridor*.
5. Where a smoke detection system is installed in all areas served by the duct in which the damper will be located, the *smoke dampers* shall be permitted to be controlled by the smoke detection system.

717.3.3.3 Combination fire/smoke damper actuation. *Combination fire/smoke damper* actuation shall be in accordance with Sections 717.3.3.1 and 717.3.3.2. *Combination fire/smoke dampers* installed in smoke control system shaft penetrations shall not be activated by local area smoke detection unless it is secondary to the smoke management system controls.

717.3.3.4 Ceiling radiation damper actuation. The operating temperature of a *ceiling radiation damper* actuation device shall be 50°F (27.8°C) above the normal temperature within the duct system, but not less than 160°F (71°C).

717.3.3.5 Corridor damper actuation. *Corridor damper* actuation shall be in accordance with Sections 717.3.3.1 and 717.3.3.2.

717.4 Access and identification. Fire and smoke *dampers* shall be provided with an *approved* means of access that is large enough to *permit* inspection and maintenance of the *damper* and its operating parts. The access shall not affect the integrity of fire-resistance-rated assemblies. The access openings shall not reduce the *fire-resistance rating* of the assembly. Access points shall be permanently identified on the exterior by a *label* having letters not less than $^1/_2$ inch (12.7 mm) in height reading: FIRE/SMOKE DAMPER, SMOKE DAMPER or FIRE DAMPER. Access doors in ducts shall be tight fitting and suitable for the required duct construction.

717.5 Where required. *Fire, dampers, smoke dampers, combination fire/smoke dampers, ceiling radiation dampers* and *corridor dampers* shall be provided at the locations prescribed in Sections 717.5.1 through 717.5.7 and 717.6. Where an assembly is required to have both *fire dampers* and *smoke dampers*, *combination fire/smoke dampers* or a *fire damper* and a *smoke damper* shall be provided.

717.5.1 Fire walls. Ducts and air transfer openings permitted in *fire walls* in accordance with Section 706.11 shall be protected with *listed fire dampers* installed in accordance with their listing.

717.5.1.1 Horizontal exits. A *listed smoke damper* designed to resist the passage of smoke shall be provided at each point a duct or air transfer opening penetrates a *fire wall* that serves as a horizontal *exit*.

717.5.2 Fire barriers. Ducts and air transfer openings of *fire barriers* shall be protected with *approved fire dampers* installed in accordance with their listing. Ducts and air transfer openings shall not penetrate enclosures for *interior exit stairways* and *ramps* and *exit passageways*, except as permitted by Sections 1023.5 and 1024.6, respectively.

Exception: *Fire dampers* are not required at penetrations of *fire barriers* where any of the following apply:

1. Penetrations are tested in accordance with ASTM E 119 or UL 263 as part of the fire-resistance-rated assembly.
2. Ducts are used as part of an *approved* smoke control system in accordance with Section 909 and where the use of a *fire damper* would interfere with the operation of a smoke control system.
3. Such walls are penetrated by ducted HVAC systems, have a required *fire-resistance rating* of 1 hour or less, are in areas of other than Group H and are in buildings equipped throughout with an *automatic sprinkler system* in accordance with Section 903.3.1.1 or 903.3.1.2. For the purposes of this exception, a ducted HVAC system shall be a duct system for conveying supply, return or exhaust air as part of the structure's HVAC system. Such a duct system shall be constructed of sheet steel not less than No. 26 gage thickness and shall be continuous from the air-handling appliance or equipment to the air outlet and inlet terminals.

717.5.2.1 Horizontal exits. A *listed smoke damper* designed to resist the passage of smoke shall be provided at each point a duct or air transfer opening penetrates a *fire barrier* that serves as a horizontal *exit*.

717.5.3 Shaft enclosures. Shaft enclosures that are permitted to be penetrated by ducts and air transfer openings shall be protected with *approved* fire and smoke *dampers* installed in accordance with their listing.

Exceptions:

1. *Fire dampers* are not required at penetrations of shafts where any of the following criteria are met:
   - 1.1. Steel exhaust subducts are extended not less than 22 inches (559 mm) vertically in exhaust shafts, provided there is a continuous airflow upward to the outside.
   - 1.2. Penetrations are tested in accordance with ASTM E 119 or UL 263 as part of the fire-resistance-rated assembly.
   - 1.3. Ducts are used as part of an *approved* smoke control system designed and installed in accordance with Section 909 and where the *fire damper* will interfere with the operation of the smoke control system.

1.4. The penetrations are in parking garage exhaust or supply shafts that are separated from other building shafts by not less than 2-hour fire-resistance-rated construction.

2. In Group B and R occupancies equipped throughout with an *automatic sprinkler system* in accordance with Section 903.3.1.1, *smoke dampers* are not required at penetrations of shafts where all of the following criteria are met:

   2.1. Kitchen, clothes dryer, bathroom and toilet room exhaust openings are installed with steel exhaust subducts, having a minimum wall thickness of 0.0187-inch (0.4712 mm) (No. 26 gage).

   2.2. The subducts extend not less than 22 inches (559 mm) vertically.

   2.3. An exhaust fan is installed at the upper terminus of the shaft that is powered continuously in accordance with the provisions of Section 909.11, so as to maintain a continuous upward airflow to the outside.

3. *Smoke dampers* are not required at penetration of exhaust or supply shafts in parking garages that are separated from other building shafts by not less than 2-hour fire-resistance-rated construction.

4. *Smoke dampers* are not required at penetrations of shafts where ducts are used as part of an *approved* mechanical smoke control system designed in accordance with Section 909 and where the *smoke damper* will interfere with the operation of the smoke control system.

5. *Fire dampers* and *combination fire/smoke dampers* are not required in kitchen and clothes dryer exhaust systems where installed in accordance with the *International Mechanical Code*.

717.5.4 Fire partitions. Ducts and air transfer openings that penetrate *fire partitions* shall be protected with *listed fire dampers* installed in accordance with their listing.

Exceptions: In occupancies other than Group H, *fire dampers* are not required where any of the following apply:

1. Corridor walls in buildings equipped throughout with an *automatic sprinkler system* in accordance with Section 903.3.1.1 or 903.3.1.2 and the duct is protected as a *through penetration* in accordance with Section 714.

2. Tenant partitions in *covered and open mall buildings* where the walls are not required by provisions elsewhere in the code to extend to the underside of the floor or roof sheathing, slab or deck above.

3. The duct system is constructed of *approved* materials in accordance with the *International Mechanical Code* and the duct penetrating the wall complies with all of the following requirements:

   3.1. The duct shall not exceed 100 square inches (0.06 m^2).

   3.2. The duct shall be constructed of steel not less than 0.0217 inch (0.55 mm) in thickness.

   3.3. The duct shall not have openings that communicate the *corridor* with adjacent spaces or rooms.

   3.4. The duct shall be installed above a ceiling.

   3.5. The duct shall not terminate at a wall register in the fire-resistance-rated wall.

   3.6. A minimum 12-inch-long (305 mm) by 0.060-inch-thick (1.52 mm) steel sleeve shall be centered in each duct opening. The sleeve shall be secured to both sides of the wall and all four sides of the sleeve with minimum $1^1/_2$-inch by $1^1/_2$-inch by 0.060-inch (38 mm by 38 mm by 1.52 mm) steel retaining angles. The retaining angles shall be secured to the sleeve and the wall with No. 10 (M5) screws. The *annular space* between the steel sleeve and the wall opening shall be filled with *mineral wool* batting on all sides.

4. Such walls are penetrated by ducted HVAC systems, have a required *fire-resistance rating* of 1 hour or less, and are in buildings equipped throughout with an automatic sprinkler system in accordance with Section 903.3.1.1 or 903.3.1.2. For the purposes of this exception, a ducted HVAC system shall be a duct system for conveying supply, return or exhaust air as part of the structure's HVAC system. Such a duct system shall be constructed of sheet steel not less than No. 26 gage thickness and shall be continuous from the air-handling appliance or equipment to the air outlet and inlet terminals.

717.5.4.1 Corridors. Duct and air transfer openings that penetrate *corridors* shall be protected with dampers as follows:

1. A *corridor damper* shall be provided where corridor ceilings, constructed as required for the corridor walls as permitted in Section 708.4, Exception 3, are penetrated.

2. A *ceiling radiation damper* shall be provided where the ceiling membrane of a *fire-resistance-rated* floor-ceiling or roof-ceiling assembly, constructed as permitted in Section 708.4, Exception 2, is penetrated.

3. A listed smoke damper designed to resist the passage of smoke shall be provided at each point a duct or air transfer opening penetrates a corridor

enclosure required to have smoke and draft control doors in accordance with Section 716.5.3.

Exceptions:

1. *Smoke dampers* are not required where the building is equipped throughout with an *approved* smoke control system in accordance with Section 909, and *smoke dampers* are not necessary for the operation and control of the system.
2. *Smoke dampers* are not required in *corridor* penetrations where the duct is constructed of steel not less than 0.019 inch (0.48 mm) in thickness and there are no openings serving the *corridor*.

717.5.5 Smoke barriers. A *listed smoke damper* designed to resist the passage of smoke shall be provided at each point a duct or air transfer opening penetrates a *smoke barrier*. *Smoke dampers* and *smoke damper* actuation methods shall comply with Section 717.3.3.2.

Exceptions:

1. *Smoke dampers* are not required where the openings in ducts are limited to a single *smoke compartment* and the ducts are constructed of steel.
2. *Smoke dampers* are not required in *smoke barriers* required by Section 407.5 for Group I-2, Condition 2—where the HVAC system is fully ducted in accordance with Section 603 of the *International Mechanical Code* and where buildings are equipped throughout with an *automatic sprinkler system* in accordance with Section 903.3.1.1 and equipped with quick-response sprinklers in accordance with Section 903.3.2.

717.5.6 Exterior walls. Ducts and air transfer openings in fire-resistance-rated *exterior walls* required to have protected openings in accordance with Section 705.10 shall be protected with *listed fire dampers* installed in accordance with their listing.

717.5.7 Smoke partitions. A *listed smoke damper* designed to resist the passage of smoke shall be provided at each point that an air transfer opening penetrates a smoke partition. *Smoke dampers* and *smoke damper* actuation methods shall comply with Section 717.3.3.2.

Exception: Where the installation of a *smoke damper* will interfere with the operation of a required smoke control system in accordance with Section 909, *approved* alternative protection shall be utilized.

717.6 Horizontal assemblies. Penetrations by ducts and air transfer openings of a floor, floor/ceiling assembly or the ceiling membrane of a roof/ceiling assembly shall be protected by a shaft enclosure that complies with Section 713 or shall comply with Sections 717.6.1 through 717.6.3.

717.6.1 Through penetrations. In occupancies other than Groups I-2 and I-3, a duct constructed of *approved* materials in accordance with the *International Mechanical Code* that penetrates a fire-resistance-rated floor/ceiling assembly that connects not more than two *stories* is permitted without shaft enclosure protection, provided a *listed fire damper* is installed at the floor line or the duct is protected in accordance with Section 714.4. For air transfer openings, see Section 712.1.9.

Exception: A duct is permitted to penetrate three floors or less without a *fire damper* at each floor, provided such duct meets all of the following requirements:

1. The duct shall be contained and located within the cavity of a wall and shall be constructed of steel having a minimum wall thickness of 0.0187 inches (0.4712 mm) (No. 26 gage).
2. The duct shall open into only one *dwelling or sleeping unit* and the duct system shall be continuous from the unit to the exterior of the building.
3. The duct shall not exceed 4-inch (102 mm) nominal diameter and the total area of such ducts shall not exceed 100 square inches (0.065 m^2) in any 100 square feet (9.3 m^2) of floor area.
4. The *annular space* around the duct is protected with materials that prevent the passage of flame and hot gases sufficient to ignite cotton waste where subjected to ASTM E 119 or UL 263 time-temperature conditions under a minimum positive pressure differential of 0.01 inch (2.49 Pa) of water at the location of the penetration for the time period equivalent to the *fire-resistance rating* of the construction penetrated.
5. Grille openings located in a ceiling of a fire-resistance-rated floor/ceiling or roof/ceiling assembly shall be protected with a *listed ceiling radiation damper* installed in accordance with Section 717.6.2.1.

717.6.2 Membrane penetrations. Ducts and air transfer openings constructed of *approved* materials in accordance with the *International Mechanical Code* that penetrate the ceiling membrane of a fire-resistance-rated floor/ceiling or roof/ceiling assembly shall be protected with one of the following:

1. A shaft enclosure in accordance with Section 713.
2. A *listed ceiling radiation damper* installed at the ceiling line where a duct penetrates the ceiling of a fire-resistance-rated floor/ceiling or roof/ceiling assembly.
3. A *listed ceiling radiation damper* installed at the ceiling line where a diffuser with no duct attached penetrates the ceiling of a fire-resistance-rated floor/ceiling or roof/ceiling assembly.

717.6.2.1 Ceiling radiation dampers. *Ceiling radiation dampers* shall be tested in accordance with Section 717.3.1. *Ceiling radiation dampers* shall be installed in accordance with the details *listed* in the fire-resistance-rated assembly and the manufacturer's instructions and

the listing. *Ceiling radiation dampers* are not required where one of the following applies:

1. Tests in accordance with ASTM E 119 or UL 263 have shown that *ceiling radiation dampers* are not necessary in order to maintain the *fire-resistance rating* of the assembly.
2. Where exhaust duct penetrations are protected in accordance with Section 714.4.2, are located within the cavity of a wall and do not pass through another *dwelling unit* or tenant space.
3. Where duct and air transfer openings are protected with a duct outlet protection system tested as part of a *fire-resistance-rated* assembly in accordance with ASTM E 119 or UL 263.

717.6.3 Nonfire-resistance-rated floor assemblies. Duct systems constructed of *approved* materials in accordance with the *International Mechanical Code* that penetrate nonfire-resistance-rated floor assemblies shall be protected by any of the following methods:

1. A shaft enclosure in accordance with Section 713.
2. The duct connects not more than two *stories*, and the *annular space* around the penetrating duct is protected with an *approved* noncombustible material that resists the free passage of flame and the products of combustion.
3. In floor assemblies composed of noncombustible materials, a shaft shall not be required where the duct connects not more than three stories, the annular space around the penetrating duct is protected with an approved noncombustible material that resists the free passage of flame and the products of combustion and a *fire damper* is installed at each floor line.

Exception: *Fire dampers* are not required in ducts within individual residential *dwelling units*.

717.7 Flexible ducts and air connectors. Flexible ducts and air connectors shall not pass through any fire-resistance-rated assembly. Flexible air connectors shall not pass through any wall, floor or ceiling.

SECTION 718
CONCEALED SPACES

718.1 General. *Fireblocking* and draftstopping shall be installed in combustible concealed locations in accordance with this section. *Fireblocking* shall comply with Section 718.2. Draftstopping in floor/ceiling spaces and *attic* spaces shall comply with Sections 718.3 and 718.4, respectively. The permitted use of combustible materials in concealed spaces of buildings of Type I or II construction shall be limited to the applications indicated in Section 718.5.

718.2 Fireblocking. In combustible construction, *fireblocking* shall be installed to cut off concealed draft openings (both vertical and horizontal) and shall form an effective barrier between floors, between a top *story* and a roof or *attic* space. *Fireblocking* shall be installed in the locations specified in Sections 718.2.2 through 718.2.7.

718.2.1 Fireblocking materials. *Fireblocking* shall consist of the following materials:

1. Two-inch (51 mm) nominal lumber.
2. Two thicknesses of 1-inch (25 mm) nominal lumber with broken lap joints.
3. One thickness of 0.719-inch (18.3 mm) wood structural panels with joints backed by 0.719-inch (18.3 mm) wood structural panels.
4. One thickness of 0.75-inch (19.1 mm) particleboard with joints backed by 0.75-inch (19 mm) particleboard.
5. One-half-inch (12.7 mm) gypsum board.
6. One-fourth-inch (6.4 mm) cement-based millboard.
7. Batts or blankets of *mineral wool*, *mineral fiber* or other *approved* materials installed in such a manner as to be securely retained in place.
8. Cellulose insulation installed as tested for the specific application.

718.2.1.1 Batts or blankets of mineral wool or mineral fiber. Batts or blankets of *mineral wool* or *mineral fiber* or other *approved* nonrigid materials shall be permitted for compliance with the 10-foot (3048 mm) horizontal *fireblocking* in walls constructed using parallel rows of studs or staggered studs.

718.2.1.2 Unfaced fiberglass. Unfaced fiberglass batt insulation used as *fireblocking* shall fill the entire cross section of the wall cavity to a minimum height of 16 inches (406 mm) measured vertically. Where piping, conduit or similar obstructions are encountered, the insulation shall be packed tightly around the obstruction.

718.2.1.3 Loose-fill insulation material. Loose-fill insulation material, insulating foam sealants and caulk materials shall not be used as a fireblock unless specifically tested in the form and manner intended for use to demonstrate its ability to remain in place and to retard the spread of fire and hot gases.

718.2.1.4 Fireblocking integrity. The integrity of fireblocks shall be maintained.

718.2.1.5 Double stud walls. Batts or blankets of mineral or glass fiber or other *approved* nonrigid materials shall be allowed as *fireblocking* in walls constructed using parallel rows of studs or staggered studs.

718.2.2 Concealed wall spaces. *Fireblocking* shall be provided in concealed spaces of stud walls and partitions, including furred spaces, and parallel rows of studs or staggered studs, as follows:

1. Vertically at the ceiling and floor levels.
2. Horizontally at intervals not exceeding 10 feet (3048 mm).

718.2.3 Connections between horizontal and vertical spaces. *Fireblocking* shall be provided at interconnections between concealed vertical stud wall or partition spaces and concealed horizontal spaces created by an assembly of floor joists or trusses, and between concealed vertical and horizontal spaces such as occur at soffits, drop ceilings, cove ceilings and similar locations.

718.2.4 Stairways. *Fireblocking* shall be provided in concealed spaces between *stair* stringers at the top and bottom of the run. Enclosed spaces under *stairways* shall comply with Section 1011.7.3.

718.2.5 Ceiling and floor openings. Where required by Section 712.1.8, Exception 1 of Section 714.4.1.2 or Section 714.5, *fireblocking* of the *annular space* around vents, pipes, ducts, chimneys and fireplaces at ceilings and floor levels shall be installed with a material specifically tested in the form and manner intended for use to demonstrate its ability to remain in place and resist the free passage of flame and the products of combustion.

718.2.5.1 Factory-built chimneys and fireplaces. Factory-built chimneys and fireplaces shall be fireblocked in accordance with UL 103 and UL 127.

718.2.6 Exterior wall coverings. *Fireblocking* shall be installed within concealed spaces of exterior wall coverings and other exterior architectural elements where permitted to be of combustible construction as specified in Section 1406 or where erected with combustible frames. *Fireblocking* shall be installed at maximum intervals of 20 feet (6096 mm) in either dimension so that there will be no concealed space exceeding 100 square feet (9.3 m^2) between fireblocking. Where wood furring strips are used, they shall be of approved wood of natural decay resistance or preservative-treated wood. If noncontinuous, such elements shall have closed ends, with not less than 4 inches (102 mm) of separation between sections.

Exceptions:

1. *Fireblocking* of cornices is not required in single-family *dwellings*. *Fireblocking* of cornices of a two-family *dwelling* is required only at the line of *dwelling unit* separation.
2. *Fireblocking* shall not be required where the exterior wall covering is installed on noncombustible framing and the face of the exterior wall covering exposed to the concealed space is covered by one of the following materials:
   - 2.1. Aluminum having a minimum thickness of 0.019 inch (0.5 mm).
   - 2.2. Corrosion-resistant steel having a base metal thickness not less than 0.016 inch (0.4 mm) at any point.
   - 2.3. Other *approved* noncombustible materials.
3. *Fireblocking* shall not be required where the exterior wall covering has been tested in accordance with, and complies with the acceptance criteria of, NFPA 285. The exterior wall covering shall be installed as tested in accordance with NFPA 285.

718.2.7 Concealed sleeper spaces. Where wood sleepers are used for laying wood flooring on masonry or concrete fire-resistance-rated floors, the space between the floor slab and the underside of the wood flooring shall be filled with an *approved* material to resist the free passage of flame and products of combustion or fireblocked in such a manner that there will be no open spaces under the flooring that will exceed 100 square feet (9.3 m^2) in area and such space shall be filled solidly under permanent partitions so that there is no communication under the flooring between adjoining rooms.

Exceptions:

1. *Fireblocking* is not required for slab-on-grade floors in gymnasiums.
2. *Fireblocking* is required only at the juncture of each alternate lane and at the ends of each lane in a bowling facility.

718.3 Draftstopping in floors. In combustible construction, draftstopping shall be installed to subdivide floor/ceiling assemblies in the locations prescribed in Sections 718.3.2 through 718.3.3.

718.3.1 Draftstopping materials. Draftstopping materials shall be not less than $^1/_2$-inch (12.7 mm) gypsum board, $^3/_8$-inch (9.5 mm) wood structural panel, $^3/_8$-inch (9.5 mm) particleboard, 1-inch (25-mm) nominal lumber, cement fiberboard, batts or blankets of *mineral wool* or glass fiber, or other *approved* materials adequately supported. The integrity of *draftstops* shall be maintained.

718.3.2 Groups R-1, R-2, R-3 and R-4. Draftstopping shall be provided in floor/ceiling spaces in Group R-1 buildings, in Group R-2 buildings with three or more *dwelling units*, in Group R-3 buildings with two *dwelling units* and in Group R-4 buildings. Draftstopping shall be located above and in line with the *dwelling unit* and *sleeping unit* separations.

Exceptions:

1. Draftstopping is not required in buildings equipped throughout with an *automatic sprinkler system* in accordance with Section 903.3.1.1.
2. Draftstopping is not required in buildings equipped throughout with an *automatic sprinkler system* in accordance with Section 903.3.1.2, provided that automatic sprinklers are installed in the combustible concealed spaces where the draftstopping is being omitted.

718.3.3 Other groups. In other groups, draftstopping shall be installed so that horizontal floor areas do not exceed 1,000 square feet (93 m^2).

Exception: Draftstopping is not required in buildings equipped throughout with an *automatic sprinkler system* in accordance with Section 903.3.1.1.

718.4 Draftstopping in attics. In combustible construction, draftstopping shall be installed to subdivide *attic* spaces and concealed roof spaces in the locations prescribed in Sections

718.4.2 and 718.4.3. Ventilation of concealed roof spaces shall be maintained in accordance with Section 1203.2.

718.4.1 Draftstopping materials. Materials utilized for draftstopping of *attic* spaces shall comply with Section 718.3.1.

718.4.1.1 Openings. Openings in the partitions shall be protected by *self-closing* doors with automatic latches constructed as required for the partitions.

718.4.2 Groups R-1 and R-2. Draftstopping shall be provided in *attics*, mansards, overhangs or other concealed roof spaces of Group R-2 buildings with three or more *dwelling units* and in all Group R-1 buildings. Draftstopping shall be installed above, and in line with, *sleeping unit* and *dwelling unit* separation walls that do not extend to the underside of the roof sheathing above.

Exceptions:

1. Where *corridor* walls provide a *sleeping unit* or *dwelling unit* separation, draftstopping shall only be required above one of the *corridor* walls.
2. Draftstopping is not required in buildings equipped throughout with an *automatic sprinkler system* in accordance with Section 903.3.1.1.
3. In occupancies in Group R-2 that do not exceed four *stories above grade plane*, the *attic* space shall be subdivided by *draftstops* into areas not exceeding 3,000 square feet (279 m^2) or above every two *dwelling units*, whichever is smaller.
4. Draftstopping is not required in buildings equipped throughout with an *automatic sprinkler system* in accordance with Section 903.3.1.2, provided that automatic sprinklers are installed in the combustible concealed space where the draftstopping is being omitted.

718.4.3 Other groups. Draftstopping shall be installed in *attics* and concealed roof spaces, such that any horizontal area does not exceed 3,000 square feet (279 m^2).

Exception: Draftstopping is not required in buildings equipped throughout with an *automatic sprinkler system* in accordance with Section 903.3.1.1.

718.5 Combustible materials in concealed spaces in Type I or II construction. Combustible materials shall not be permitted in concealed spaces of buildings of Type I or II construction.

Exceptions:

1. Combustible materials in accordance with Section 603.
2. Combustible materials exposed within plenums complying with Section 602 of the *International Mechanical Code*.
3. Class A *interior finish* materials classified in accordance with Section 803.
4. Combustible piping within partitions or shaft enclosures installed in accordance with the provisions of this code.
5. Combustible piping within concealed ceiling spaces installed in accordance with the *International Mechanical Code* and the *International Plumbing Code*.
6. Combustible insulation and covering on pipe and tubing, installed in concealed spaces other than plenums, complying with Section 720.7.

SECTION 719
FIRE-RESISTANCE REQUIREMENTS FOR PLASTER

719.1 Thickness of plaster. The minimum thickness of gypsum plaster or Portland cement plaster used in a fire-resistance-rated system shall be determined by the prescribed fire tests. The plaster thickness shall be measured from the face of the lath where applied to gypsum lath or metal lath.

719.2 Plaster equivalents. For fire-resistance purposes, $^1/_2$ inch (12.7 mm) of unsanded gypsum plaster shall be deemed equivalent to $^3/_4$ inch (19.1 mm) of one-to-three gypsum sand plaster or 1 inch (25 mm) of Portland cement sand plaster.

719.3 Noncombustible furring. In buildings of Type I and II construction, plaster shall be applied directly on concrete or masonry or on *approved* noncombustible plastering base and furring.

719.4 Double reinforcement. Plaster protection more than 1 inch (25 mm) in thickness shall be reinforced with an additional layer of *approved* lath embedded not less than $^3/_4$ inch (19.1 mm) from the outer surface and fixed securely in place.

Exception: Solid plaster partitions or where otherwise determined by fire tests.

719.5 Plaster alternatives for concrete. In reinforced concrete construction, gypsum plaster or Portland cement plaster is permitted to be substituted for $^1/_2$ inch (12.7 mm) of the required poured concrete protection, except that a minimum thickness of $^3/_8$ inch (9.5 mm) of poured concrete shall be provided in reinforced concrete floors and 1 inch (25 mm) in reinforced concrete columns in addition to the plaster finish. The concrete base shall be prepared in accordance with Section 2510.7.

SECTION 720
THERMAL- AND SOUND-INSULATING MATERIALS

720.1 General. Insulating materials, including facings such as vapor retarders and *vapor-permeable membranes*, similar coverings and all layers of single and multilayer reflective foil insulations, shall comply with the requirements of this section. Where a flame spread index or a smoke-developed index is specified in this section, such index shall be determined in accordance with ASTM E 84 or UL 723. Any material that is subject to an increase in flame spread index or smoke-developed index beyond the limits herein established through the effects of age, moisture or other atmospheric conditions shall not be permitted.

Exceptions:

1. Fiberboard insulation shall comply with Chapter 23.

2. Foam plastic insulation shall comply with Chapter 26.
3. Duct and pipe insulation and duct and pipe coverings and linings in plenums shall comply with the *International Mechanical Code*.
4. All layers of single and multilayer reflective plastic core insulation shall comply with Section 2613.

720.2 Concealed installation. Insulating materials, where concealed as installed in buildings of any type of construction, shall have a flame spread index of not more than 25 and a smoke-developed index of not more than 450.

Exception: Cellulosic fiber loose-fill insulation complying with the requirements of Section 720.6 shall not be required to meet a flame spread index requirement but shall be required to meet a smoke-developed index of not more than 450 when tested in accordance with CAN/ULC S102.2.

720.2.1 Facings. Where such materials are installed in concealed spaces in buildings of Type III, IV or V construction, the flame spread and smoke-developed limitations do not apply to facings, coverings, and layers of reflective foil insulation that are installed behind and in substantial contact with the unexposed surface of the ceiling, wall or floor finish.

Exception: All layers of single and multilayer reflective plastic core insulation shall comply with Section 2613.

720.3 Exposed installation. Insulating materials, where exposed as installed in buildings of any type of construction, shall have a flame spread index of not more than 25 and a smoke-developed index of not more than 450.

Exception: Cellulosic fiber loose-fill insulation complying with the requirements of Section 720.6 shall not be required to meet a flame spread index requirement but shall be required to meet a smoke-developed index of not more than 450 when tested in accordance with CAN/ULC S102.2.

720.3.1 Attic floors. Exposed insulation materials installed on *attic* floors shall have a critical radiant flux of not less than 0.12 watt per square centimeter when tested in accordance with ASTM E 970.

720.4 Loose-fill insulation. Loose-fill insulation materials that cannot be mounted in the ASTM E 84 or UL 723 apparatus without a screen or artificial supports shall comply with the flame spread and smoke-developed limits of Sections 720.2 and 720.3 when tested in accordance with CAN/ULC S102.2.

Exception: Cellulosic fiber loose-fill insulation shall not be required to meet a flame spread index requirement when tested in accordance with CAN/ULC S102.2, provided such insulation has a smoke-developed index of not more than 450 and complies with the requirements of Section 720.6.

720.5 Roof insulation. The use of combustible roof insulation not complying with Sections 720.2 and 720.3 shall be permitted in any type of construction provided that insulation is covered with *approved* roof coverings directly applied thereto.

720.6 Cellulosic fiber loose-fill insulation and self-supported spray-applied cellulosic insulation. Cellulosic fiber loose-fill insulation and self-supported spray-applied cellulosic insulation shall comply with CPSC 16 CFR Parts 1209 and 1404. Each package of such insulating material shall be clearly labeled in accordance with CPSC 16 CFR Parts 1209 and 1404.

720.7 Insulation and covering on pipe and tubing. Insulation and covering on pipe and tubing shall have a flame spread index of not more than 25 and a smoke-developed index of not more than 450.

Exception: Insulation and covering on pipe and tubing installed in plenums shall comply with the *International Mechanical Code*.

SECTION 721
PRESCRIPTIVE FIRE RESISTANCE

721.1 General. The provisions of this section contain prescriptive details of fire-resistance-rated building elements, components or assemblies. The materials of construction listed in Tables 721.1(1), 721.1(2), and 721.1(3) shall be assumed to have the *fire-resistance ratings* prescribed therein. Where materials that change the capacity for heat dissipation are incorporated into a fire-resistance-rated assembly, fire test results or other substantiating data shall be made available to the *building official* to show that the required fire-resistance-rating time period is not reduced.

721.1.1 Thickness of protective coverings. The thickness of fire-resistant materials required for protection of structural members shall be not less than set forth in Table 721.1(1), except as modified in this section. The figures shown shall be the net thickness of the protecting materials and shall not include any hollow space in back of the protection.

721.1.2 Unit masonry protection. Where required, metal ties shall be embedded in bed joints of unit masonry for protection of steel columns. Such ties shall be as set forth in Table 721.1(1) or be equivalent thereto.

721.1.3 Reinforcement for cast-in-place concrete column protection. Cast-in-place concrete protection for steel columns shall be reinforced at the edges of such members with wire ties of not less than 0.18 inch (4.6 mm) in diameter wound spirally around the columns on a pitch of not more than 8 inches (203 mm) or by equivalent reinforcement.

721.1.4 Plaster application. The finish coat is not required for plaster protective coatings where those coatings comply with the design mix and thickness requirements of Tables 721.1(1), 721.1(2) and 721.1(3).

721.1.5 Bonded prestressed concrete tendons. For members having a single tendon or more than one tendon installed with equal concrete cover measured from the nearest surface, the cover shall be not less than that set forth in Table 721.1(1). For members having multiple ten-

dons installed with variable concrete cover, the average tendon cover shall be not less than that set forth in Table 721.1(1), provided:

1. The clearance from each tendon to the nearest exposed surface is used to determine the average cover.
2. In no case can the clear cover for individual tendons be less than one-half of that set forth in Table 721.1(1). A minimum cover of $^3/_4$ inch (19.1 mm) for slabs and 1 inch (25 mm) for beams is required for any aggregate concrete.
3. For the purpose of establishing a *fire-resistance rating*, tendons having a clear covering less than that set forth in Table 721.1(1) shall not contribute more than 50 percent of the required ultimate moment capacity for members less than 350 square inches (0.226 m^2) in cross-sectional area and 65 percent for larger members. For structural design purposes, however, tendons having a reduced cover are assumed to be fully effective.

SECTION 722
CALCULATED FIRE RESISTANCE

722.1 General. The provisions of this section contain procedures by which the *fire resistance* of specific materials or combinations of materials is established by calculations. These procedures apply only to the information contained in this section and shall not be otherwise used. The calculated *fire resistance* of concrete, concrete masonry and clay masonry assemblies shall be permitted in accordance with ACI 216.1/TMS 0216. The calculated *fire resistance* of steel assemblies shall be permitted in accordance with Chapter 5 of ASCE 29. The calculated *fire resistance* of exposed wood members and wood decking shall be permitted in accordance with Chapter 16 of ANSI/AF&PA *National Design Specification for Wood Construction (NDS).*

722.1.1 Definitions. The following terms are defined in Chapter 2:

CERAMIC FIBER BLANKET.

CONCRETE, CARBONATE AGGREGATE.

CONCRETE, CELLULAR.

CONCRETE, LIGHTWEIGHT AGGREGATE.

CONCRETE, PERLITE.

CONCRETE, SAND-LIGHTWEIGHT.

CONCRETE, SILICEOUS AGGREGATE.

CONCRETE, VERMICULITE.

GLASS FIBERBOARD.

MINERAL BOARD.

722.2 Concrete assemblies. The provisions of this section contain procedures by which the *fire-resistance ratings* of concrete assemblies are established by calculations.

722.2.1 Concrete walls. Cast-in-place and precast concrete walls shall comply with Section 722.2.1.1. Multiwythe concrete walls shall comply with Section 722.2.1.2. Joints between precast panels shall comply with Section 722.2.1.3. Concrete walls with gypsum wallboard or plaster finish shall comply with Section 722.2.1.4.

722.2.1.1 Cast-in-place or precast walls. The minimum equivalent thicknesses of cast-in-place or precast concrete walls for *fire-resistance ratings* of 1 hour to 4 hours are shown in Table 722.2.1.1. For solid walls with flat vertical surfaces, the equivalent thickness is the same as the actual thickness. The values in Table 722.2.1.1 apply to plain, reinforced or prestressed concrete walls.

722.2.1.1.1 Hollow-core precast wall panels. For hollow-core precast concrete wall panels in which the cores are of constant cross section throughout the length, calculation of the equivalent thickness by dividing the net cross-sectional area (the gross cross section minus the area of the cores) of the panel by its width shall be permitted

TABLE 722.2.1.1
MINIMUM EQUIVALENT THICKNESS OF CAST-IN-PLACE OR PRECAST CONCRETE WALLS, LOAD-BEARING OR NONLOAD-BEARING

CONCRETE TYPE	MINIMUM SLAB THICKNESS (inches) FOR FIRE-RESISTANCE RATING OF				
	1 hour	$1^1/_2$ hours	2 hours	3 hours	4 hours
Siliceous	3.5	4.3	5.0	6.2	7.0
Carbonate	3.2	4.0	4.6	5.7	6.6
Sand-lightweight	2.7	3.3	3.8	4.6	5.4
Lightweight	2.5	3.1	3.6	4.4	5.1

For SI: 1 inch = 25.4 mm.

722.2.1.1.2 Core spaces filled. Where all of the core spaces of hollow-core wall panels are filled with loose-fill material, such as expanded shale, clay or slag, or vermiculite or perlite, the *fire-resistance rating* of the wall is the same as that of a solid wall of the same concrete type and of the same overall thickness.

722.2.1.1.3 Tapered cross sections. The thickness of panels with tapered cross sections shall be that determined at a distance $2t$ or 6 inches (152 mm), whichever is less, from the point of minimum thickness, where t is the minimum thickness.

TABLE 721.1(1)
MINIMUM PROTECTION OF STRUCTURAL PARTS BASED ON TIME PERIODS FOR VARIOUS NONCOMBUSTIBLE INSULATING MATERIALS[m]

STRUCTURAL PARTS TO BE PROTECTED	ITEM NUMBER	INSULATING MATERIAL USED	MINIMUM THICKNESS OF INSULATING MATERIAL FOR THE FOLLOWING FIRE-RESISTANCE PERIODS (inches)			
			4 hours	3 hours	2 hours	1 hour
1. Steel columns and all of primary trusses (continued)	1-1.1	Carbonate, lightweight and sand-lightweight aggregate concrete, members 6" × 6" or greater (not including sandstone, granite and siliceous gravel).[a]	$2^1/_2$	2	$1^1/_2$	1
	1-1.2	Carbonate, lightweight and sand-lightweight aggregate concrete, members 8" × 8" or greater (not including sandstone, granite and siliceous gravel).[a]	2	$1^1/_2$	1	1
	1-1.3	Carbonate, lightweight and sand-lightweight aggregate concrete, members 12" × 12" or greater (not including sandstone, granite and siliceous gravel).[a]	$1^1/_2$	1	1	1
	1-1.4	Siliceous aggregate concrete and concrete excluded in Item 1-1.1, members 6" × 6" or greater.[a]	3	2	$1^1/_2$	1
	1-1.5	Siliceous aggregate concrete and concrete excluded in Item 1-1.1, members 8" × 8" or greater.[a]	$2^1/_2$	2	1	1
	1-1.6	Siliceous aggregate concrete and concrete excluded in Item 1-1.1, members 12" × 12" or greater.[a]	2	1	1	1
	1-2.1	Clay or shale brick with brick and mortar fill.[a]	$3^3/_4$	—	—	$2^1/_4$
	1-3.1	4" hollow clay tile in two 2" layers; $^1/_2$" mortar between tile and column; $^3/_8$" metal mesh 0.046" wire diameter in horizontal joints; tile fill.[a]	4	—	—	—
	1-3.2	2" hollow clay tile; $^3/_4$" mortar between tile and column; $^3/_8$" metal mesh 0.046" wire diameter in horizontal joints; limestone concrete fill[a]; plastered with $^3/_4$" gypsum plaster.	3	—	—	—
	1-3.3	2" hollow clay tile with outside wire ties 0.08" diameter at each course of tile or $^3/_8$" metal mesh 0.046" diameter wire in horizontal joints; limestone or trap-rock concrete fill[a] extending 1" outside column on all sides.	—	—	3	—
	1-3.4	2" hollow clay tile with outside wire ties 0.08" diameter at each course of tile with or without concrete fill; $^3/_4$" mortar between tile and column.	—	—	—	2
	1-4.1	Cement plaster over metal lath wire tied to $^3/_4$" cold-rolled vertical channels with 0.049" (No. 18 B.W. gage) wire ties spaced 3" to 6" on center. Plaster mixed 1:2 $^1/_2$ by volume, cement to sand.	—	—	$2^1/_2$[b]	$^7/_8$
	1-5.1	Vermiculite concrete, 1:4 mix by volume over paperbacked wire fabric lath wrapped directly around column with additional 2" × 2" 0.065" /0.065" (No. 16/16 B.W. gage) wire fabric placed $^3/_4$" from outer concrete surface. Wire fabric tied with 0.049" (No. 18 B.W. gage) wire spaced 6" on center for inner layer and 2" on center for outer layer.	2	—	—	—
	1-6.1	Perlite or vermiculite gypsum plaster over metal lath wrapped around column and furred $1^1/_4$" from column flanges. Sheets lapped at ends and tied at 6" intervals with 0.049" (No. 18 B.W. gage) tie wire. Plaster pushed through to flanges.	$1^1/_2$	1	—	—
	1-6.2	Perlite or vermiculite gypsum plaster over self-furring metal lath wrapped directly around column, lapped 1" and tied at 6" intervals with 0.049" (No. 18 B.W. gage) wire.	$1^3/_4$	$1^3/_8$	1	—
	1-6.3	Perlite or vermiculite gypsum plaster on metal lath applied to $^3/_4$" cold-rolled channels spaced 24" apart vertically and wrapped flatwise around column.	$1^1/_2$	—	—	—
	1-6.4	Perlite or vermiculite gypsum plaster over two layers of $^1/_2$" plain full-length gypsum lath applied tight to column flanges. Lath wrapped with 1" hexagonal mesh of No. 20 gage wire and tied with doubled 0.035" diameter (No. 18 B.W. gage) wire ties spaced 23" on center. For three-coat work, the plaster mix for the second coat shall not exceed 100 pounds of gypsum to $2^1/_2$ cubic feet of aggregate for the 3-hour system.	$2^1/_2$	2	—	—

(continued)

TABLE 721.1(1)—continued
MINIMUM PROTECTION OF STRUCTURAL PARTS BASED ON TIME PERIODS FOR VARIOUS NONCOMBUSTIBLE INSULATING MATERIALS[m]

STRUCTURAL PARTS TO BE PROTECTED	ITEM NUMBER	INSULATING MATERIAL USED	MINIMUM THICKNESS OF INSULATING MATERIAL FOR THE FOLLOWING FIRE-RESISTANCE PERIODS (inches)			
			4 hours	3 hours	2 hours	1 hour
1. Steel columns and all of primary trusses	1-6.5	Perlite or vermiculite gypsum plaster over one layer of $^1/_2$" plain full-length gypsum lath applied tight to column flanges. Lath tied with doubled 0.049" (No. 18 B.W. gage) wire ties spaced 23" on center and scratch coat wrapped with 1" hexagonal mesh 0.035" (No. 20 B.W. gage) wire fabric. For three-coat work, the plaster mix for the second coat shall not exceed 100 pounds of gypsum to $2^1/_2$ cubic feet of aggregate.	—	2	—	—
	1-7.1	Multiple layers of $^1/_2$" gypsum wallboard[c] adhesively[d] secured to column flanges and successive layers. Wallboard applied without horizontal joints. Corner edges of each layer staggered. Wallboard layer below outer layer secured to column with doubled 0.049" (No. 18 B.W. gage) steel wire ties spaced 15" on center. Exposed corners taped and treated.	—	—	2	1
	1-7.2	Three layers of $^5/_8$" Type X gypsum wallboard.[c] First and second layer held in place by $^1/_8$" diameter by $1^3/_8$" long ring shank nails with $^5/_{16}$" diameter heads spaced 24" on center at corners. Middle layer also secured with metal straps at mid-height and 18" from each end, and by metal corner bead at each corner held by the metal straps. Third layer attached to corner bead with 1" long gypsum wallboard screws spaced 12" on center.	—	—	$1^7/_8$	—
	1-7.3	Three layers of $^5/_8$" Type X gypsum wallboard,[c] each layer screw attached to $1^5/_8$" steel studs 0.018" thick (No. 25 carbon sheet steel gage) at each corner of column. Middle layer also secured with 0.049" (No. 18 B.W. gage) double-strand steel wire ties, 24" on center. Screws are No. 6 by 1" spaced 24" on center for inner layer, No. 6 by $1^5/_8$" spaced 12" on center for middle layer and No. 8 by $2^1/_4$" spaced 12" on center for outer layer.	—	$1^7/_8$	—	—
	1-8.1	Wood-fibered gypsum plaster mixed 1:1 by weight gypsum-to-sand aggregate applied over metal lath. Lath lapped 1" and tied 6" on center at all end, edges and spacers with 0.049" (No. 18 B.W. gage) steel tie wires. Lath applied over $^1/_2$" spacers made of $^3/_4$" furring channel with 2" legs bent around each corner. Spacers located 1" from top and bottom of member and a maximum of 40" on center and wire tied with a single strand of 0.049" (No. 18 B.W. gage) steel tie wires. Corner bead tied to the lath at 6" on center along each corner to provide plaster thickness.	—	—	$1^5/_8$	—
	1-9.1	Minimum W8x35 wide flange steel column (w/d ≥ 0.75) with each web cavity filled even with the flange tip with normal weight carbonate or siliceous aggregate concrete (3,000 psi minimum compressive strength with 145 pcf ± 3 pcf unit weight). Reinforce the concrete in each web cavity with a minimum No. 4 deformed reinforcing bar installed vertically and centered in the cavity, and secured to the column web with a minimum No. 2 horizontal deformed reinforcing bar welded to the web every 18" on center vertically. As an alternative to the No. 4 rebar, $^3/_4$" diameter by 3" long headed studs, spaced at 12" on center vertically, shall be welded on each side of the web midway between the column flanges.	—	—	—	See Note n
2. Webs or flanges of steel beams and girders (continued)	2-1.1	Carbonate, lightweight and sand-lightweight aggregate concrete (not including sandstone, granite and siliceous gravel) with 3" or finer metal mesh placed 1" from the finished surface anchored to the top flange and providing not less than 0.025 square inch of steel area per foot in each direction.	2	$1^1/_2$	1	1
	2-1.2	Siliceous aggregate concrete and concrete excluded in Item 2-1.1 with 3" or finer metal mesh placed 1" from the finished surface anchored to the top flange and providing not less than 0.025 square inch of steel area per foot in each direction.	$2^1/_2$	2	$1^1/_2$	1
	2-2.1	Cement plaster on metal lath attached to $^3/_4$" cold-rolled channels with 0.04" (No. 18 B.W. gage) wire ties spaced 3" to 6" on center. Plaster mixed 1:2 $^1/_2$ by volume, cement to sand.	—	—	$2^1/_2$[b]	$^7/_8$

(continued)

TABLE 721.1(1)—continued
MINIMUM PROTECTION OF STRUCTURAL PARTS BASED ON TIME PERIODS FOR VARIOUS NONCOMBUSTIBLE INSULATING MATERIALS[m]

STRUCTURAL PARTS TO BE PROTECTED	ITEM NUMBER	INSULATING MATERIAL USED	MINIMUM THICKNESS OF INSULATING MATERIAL FOR THE FOLLOWING FIRE-RESISTANCE PERIODS (inches)			
			4 hours	3 hours	2 hours	1 hour
2. Webs or flanges of steel beams and girders	2-3.1	Vermiculite gypsum plaster on a metal lath cage, wire tied to 0.165" diameter (No. 8 B.W. gage) steel wire hangers wrapped around beam and spaced 16" on center. Metal lath ties spaced approximately 5" on center at cage sides and bottom.	—	$^7/_8$	—	—
	2-4.1	Two layers of $^5/_8$" Type X gypsum wallboard[c] are attached to U-shaped brackets spaced 24" on center. 0.018" thick (No. 25 carbon sheet steel gage) $1^5/_8$" deep by 1" galvanized steel runner channels are first installed parallel to and on each side of the top beam flange to provide a $^1/_2$" clearance to the flange. The channel runners are attached to steel deck or concrete floor construction with approved fasteners spaced 12" on center. U-shaped brackets are formed from members identical to the channel runners. At the bent portion of the U-shaped bracket, the flanges of the channel are cut out so that $1^5/_8$" deep corner channels can be inserted without attachment parallel to each side of the lower flange. As an alternative, 0.021" thick (No. 24 carbon sheet steel gage) 1" × 2" runner and corner angles shall be used in lieu of channels, and the web cutouts in the U-shaped brackets shall not be required. Each angle is attached to the bracket with $^1/_2$"-long No. 8 self-drilling screws. The vertical legs of the U-shaped bracket are attached to the runners with one $^1/_2$" long No. 8 self-drilling screw. The completed steel framing provides a $2^1/_8$" and $1^1/_2$" space between the inner layer of wallboard and the sides and bottom of the steel beam, respectively. The inner layer of wallboard is attached to the top runners and bottom corner channels or corner angles with $1^1/_4$"-long No. 6 self-drilling screws spaced 16" on center. The outer layer of wallboard is applied with $1^3/_4$"-long No. 6 self-drilling screws spaced 8" on center. The bottom corners are reinforced with metal corner beads.	—	—	$1^1/_4$	—
	2-4.2	Three layers of $^5/_8$" Type X gypsum wallboard[c] attached to a steel suspension system as described immediately above utilizing the 0.018" thick (No. 25 carbon sheet steel gage) 1" × 2" lower corner angles. The framing is located so that a $2^1/_8$" and 2" space is provided between the inner layer of wallboard and the sides and bottom of the beam, respectively. The first two layers of wallboard are attached as described immediately above. A layer of 0.035" thick (No. 20 B.W. gage) 1" hexagonal galvanized wire mesh is applied under the soffit of the middle layer and up the sides approximately 2". The mesh is held in position with the No. 6 $1^5/_8$"-long screws installed in the vertical leg of the bottom corner angles. The outer layer of wallboard is attached with No. 6 $2^1/_4$"-long screws spaced 8" on center. One screw is also installed at the mid-depth of the bracket in each layer. Bottom corners are finished as described above.	—	$1^7/_8$	—	—
3. Bonded pre-tensioned reinforcement in prestressed concrete[e]	3-1.1	Carbonate, lightweight, sand-lightweight and siliceous[f] aggregate concrete Beams or girders	4[g]	3[g]	$2^1/_2$	$1^1/_2$
		Solid[h]		2	$1^1/_2$	1

(continued)

TABLE 721.1(1)—continued
MINIMUM PROTECTION OF STRUCTURAL PARTS BASED ON TIME PERIODS FOR VARIOUS NONCOMBUSTIBLE INSULATING MATERIALS[m]

STRUCTURAL PARTS TO BE PROTECTED	ITEM NUMBER	INSULATING MATERIAL USED	MINIMUM THICKNESS OF INSULATING MATERIAL FOR THE FOLLOWING FIRE-RESISTANCE PERIODS (inches)			
			4 hours	3 hours	2 hours	1 hour
4. Bonded or unbonded post-tensioned tendons in pre-stressed concrete[e, i]	4-1.1	Carbonate, lightweight, sand-lightweight and siliceous[f] aggregate concrete				
		Unrestrained members:				
		Solid slabs[h]	—	2	$1^1/_2$	—
		Beams and girders[j]				
		8" wide		$4^1/_2$	$2^1/_2$	$1^3/_4$
		greater than 12" wide	3	$2^1/_2$	2	$1^1/_2$
	4-1.2	Carbonate, lightweight, sand-lightweight and siliceous aggregate				
		Restrained members:[k]				
		Solid slabs[h]	$1^1/_4$	1	$^3/_4$	—
		Beams and girders[j]				
		8" wide	$2^1/_2$	2	$1^3/_4$	—
		greater than 12" wide	2	$1^3/_4$	$1^1/_2$	—
5. Reinforcing steel in reinforced concrete columns, beams girders and trusses	5-1.1	Carbonate, lightweight and sand-lightweight aggregate concrete, members 12" or larger, square or round. (Size limit does not apply to beams and girders monolithic with floors.)	$1^1/_2$	$1^1/_2$	$1^1/_2$	$1^1/_2$
		Siliceous aggregate concrete, members 12" or larger, square or round. (Size limit does not apply to beams and girders monolithic with floors.)	2	$1^1/_2$	$1^1/_2$	$1^1/_2$
6. Reinforcing steel in reinforced concrete joists[l]	6-1.1	Carbonate, lightweight and sand-lightweight aggregate concrete	$1^1/_4$	$1^1/_4$	1	$^3/_4$
	6-1.2	Siliceous aggregate concrete	$1^3/_4$	$1^1/_2$	1	$^3/_4$
7. Reinforcing and tie rods in floor and roof slabs[l]	7-1.1	Carbonate, lightweight and sand-lightweight aggregate concrete	1	1	$^3/_4$	$^3/_4$
	7-1.2	Siliceous aggregate concrete	$1^1/_4$	1	1	$^3/_4$

For SI: 1 inch = 25.4 mm, 1 square inch = 645.2 mm^2, 1 cubic foot = 0.0283 m^3, 1 pound per cubic foot = 16.02 kg/m^3.

a. Reentrant parts of protected members to be filled solidly.

b. Two layers of equal thickness with a $^3/_4$-inch airspace between.

c. For all of the construction with gypsum wallboard described in Table 721.1(1), gypsum base for veneer plaster of the same size, thickness and core type shall be permitted to be substituted for gypsum wallboard, provided attachment is identical to that specified for the wallboard and the joints on the face layer are reinforced, and the entire surface is covered with not less than $^1/_{16}$-inch gypsum veneer plaster.

d. An approved adhesive qualified under ASTM E 119 or UL 263.

e. Where lightweight or sand-lightweight concrete having an oven-dry weight of 110 pounds per cubic foot or less is used, the tabulated minimum cover shall be permitted to be reduced 25 percent, except that in no case shall the cover be less than $^3/_4$ inch in slabs or $1^1/_2$ inches in beams or girders.

f. For solid slabs of siliceous aggregate concrete, increase tendon cover 20 percent.

g. Adequate provisions against spalling shall be provided by U-shaped or hooped stirrups spaced not to exceed the depth of the member with a clear cover of 1 inch.

h. Prestressed slabs shall have a thickness not less than that required in Table 721.1(3) for the respective fire-resistance time period.

i. Fire coverage and end anchorages shall be as follows: Cover to the prestressing steel at the anchor shall be $^1/_2$ inch greater than that required away from the anchor. Minimum cover to steel-bearing plate shall be 1 inch in beams and $^3/_4$ inch in slabs.

j. For beam widths between 8 inches and 12 inches, cover thickness shall be permitted to be determined by interpolation.

k. Interior spans of continuous slabs, beams and girders shall be permitted to be considered restrained.

l. For use with concrete slabs having a comparable fire endurance where members are framed into the structure in such a manner as to provide equivalent performance to that of monolithic concrete construction.

m. Generic *fire-resistance ratings* (those not designated as PROPRIETARY* in the listing) in GA 600 shall be accepted as if herein listed.

n. No additional insulating material is required on the exposed outside face of the column flange to achieve a 1-hour *fire-resistance rating*.

TABLE 721.1(2)
RATED FIRE-RESISTANCE PERIODS FOR VARIOUS WALLS AND PARTITIONS [a, o, p]

MATERIAL	ITEM NUMBER	CONSTRUCTION	MINIMUM FINISHED THICKNESS FACE-TO-FACE[b] (inches)			
			4 hours	3 hours	2 hours	1 hour
1. Brick of clay or shale	1-1.1	Solid brick of clay or shale[c].	6	4.9	3.8	2.7
	1-1.2	Hollow brick, not filled.	5.0	4.3	3.4	2.3
	1-1.3	Hollow brick unit wall, grout or filled with perlite vermiculite or expanded shale aggregate.	6.6	5.5	4.4	3.0
	1-2.1	4" nominal thick units not less than 75 percent solid backed with a hat-shaped metal furring channel $^3/_4$" thick formed from 0.021" sheet metal attached to the brick wall on 24" centers with approved fasteners, and $^1/_2$" Type X gypsum wallboard attached to the metal furring strips with 1"-long Type S screws spaced 8" on center.	—	—	5[d]	—
2. Combination of clay brick and load-bearing hollow clay tile	2-1.1	4" solid brick and 4" tile (not less than 40 percent solid).	—	8	—	—
	2-1.2	4" solid brick and 8" tile (not less than 40 percent solid).	12	—	—	—
3. Concrete masonry units	3-1.1[f, g]	Expanded slag or pumice.	4.7	4.0	3.2	2.1
	3-1.2[f, g]	Expanded clay, shale or slate.	5.1	4.4	3.6	2.6
	3-1.3[f]	Limestone, cinders or air-cooled slag.	5.9	5.0	4.0	2.7
	3-1.4[f, g]	Calcareous or siliceous gravel.	6.2	5.3	4.2	2.8
4. Solid concrete[h, i]	4-1.1	Siliceous aggregate concrete.	7.0	6.2	5.0	3.5
		Carbonate aggregate concrete.	6.6	5.7	4.6	3.2
		Sand-lightweight concrete.	5.4	4.6	3.8	2.7
		Lightweight concrete.	5.1	4.4	3.6	2.5
5. Glazed or unglazed facing tile, nonload-bearing	5-1.1	One 2" unit cored 15 percent maximum and one 4" unit cored 25 percent maximum with $^3/_4$" mortar-filled collar joint. Unit positions reversed in alternate courses.	—	$6^3/_8$	—	—
	5-1.2	One 2" unit cored 15 percent maximum and one 4" unit cored 40 percent maximum with $^3/_4$" mortar-filled collar joint. Unit positions side with $^3/_4$" gypsum plaster. Two wythes tied together every fourth course with No. 22 gage corrugated metal ties.	—	$6^3/_4$	—	—
	5-1.3	One unit with three cells in wall thickness, cored 29 percent maximum.	—	—	6	—
	5-1.4	One 2" unit cored 22 percent maximum and one 4" unit cored 41 percent maximum with $^1/_4$" mortar-filled collar joint. Two wythes tied together every third course with 0.030" (No. 22 galvanized sheet steel gage) corrugated metal ties.	—	—	6	—
	5-1.5	One 4" unit cored 25 percent maximum with $^3/_4$" gypsum plaster on one side.	—	—	$4^3/_4$	—
	5-1.6	One 4" unit with two cells in wall thickness, cored 22 percent maximum.	—	—	—	4
	5-1.7	One 4" unit cored 30 percent maximum with $^3/_4$" vermiculite gypsum plaster on one side.	—	—	$4^1/_2$	—
	5-1.8	One 4" unit cored 39 percent maximum with $^3/_4$" gypsum plaster on one side.	—	—	—	$4^1/_2$

(continued)

TABLE 721.1(2)—continued
RATED FIRE-RESISTANCE PERIODS FOR VARIOUS WALLS AND PARTITIONS [a, o, p]

MATERIAL	ITEM NUMBER	CONSTRUCTION	MINIMUM FINISHED THICKNESS FACE-TO-FACE[b] (inches)			
			4 hours	3 hours	2 hours	1 hour
6. Solid gypsum plaster	6-1.1	$^3/_4$" by 0.055" (No. 16 carbon sheet steel gage) vertical cold-rolled channels, 16" on center with 2.6-pound flat metal lath applied to one face and tied with 0.049" (No. 18 B.W. gage) wire at 6" spacing. Gypsum plaster each side mixed 1:2 by weight, gypsum to sand aggregate.	—	—	—	2[d]
	6-1.2	$^3/_4$" by 0.05" (No. 16 carbon sheet steel gage) cold-rolled channels 16" on center with metal lath applied to one face and tied with 0.049" (No. 18 B.W. gage) wire at 6" spacing. Perlite or vermiculite gypsum plaster each side. For three-coat work, the plaster mix for the second coat shall not exceed 100 pounds of gypsum to $2^1/_2$ cubic feet of aggregate for the 1-hour system.	—	—	$2^1/_2$[d]	2[d]
	6-1.3	$^3/_4$" by 0.055" (No. 16 carbon sheet steel gage) vertical cold-rolled channels, 16" on center with $^3/_8$" gypsum lath applied to one face and attached with sheet metal clips. Gypsum plaster each side mixed 1:2 by weight, gypsum to sand aggregate.	—	—	—	2[d]
	6-2.1	Studless with $^1/_2$" full-length plain gypsum lath and gypsum plaster each side. Plaster mixed 1:1 for scratch coat and 1:2 for brown coat, by weight, gypsum to sand aggregate.	—	—	—	2[d]
	6-2.2	Studless with $^1/_2$" full-length plain gypsum lath and perlite or vermiculite gypsum plaster each side.	—	—	$2^1/_2$[d]	2[d]
	6-2.3	Studless partition with $^3/_8$" rib metal lath installed vertically adjacent edges tied 6" on center with No. 18 gage wire ties, gypsum plaster each side mixed 1:2 by weight, gypsum to sand aggregate.	—	—	—	2[d]
7. Solid perlite and Portland cement	7-1.1	Perlite mixed in the ratio of 3 cubic feet to 100 pounds of Portland cement and machine applied to stud side of $1^1/_2$" mesh by 0.058-inch (No. 17 B.W. gage) paper-backed woven wire fabric lath wire-tied to 4"-deep steel trussed wire[j] studs 16" on center. Wire ties of 0.049" (No. 18 B.W. gage) galvanized steel wire 6" on center vertically.	—	—	$3^1/_8$[d]	—
8. Solid neat wood fibered gypsum plaster	8-1.1	$^3/_4$" by 0.055-inch (No. 16 carbon sheet steel gage) cold-rolled channels, 12" on center with 2.5-pound flat metal lath applied to one face and tied with 0.049" (No. 18 B.W. gage) wire at 6" spacing. Neat gypsum plaster applied each side.	—	—	2[d]	—
9. Solid wallboard partition	9-1.1	One full-length layer $^1/_2$" Type X gypsum wallboard[e] laminated to each side of 1" full-length V-edge gypsum coreboard with approved laminating compound. Vertical joints of face layer and coreboard staggered not less than 3".	—	—	2[d]	—
10. Hollow (studless) gypsum wallboard partition	10-1.1	One full-length layer of $^5/_8$" Type X gypsum wallboard[e] attached to both sides of wood or metal top and bottom runners laminated to each side of 1"× 6" full-length gypsum coreboard ribs spaced 2" on center with approved laminating compound. Ribs centered at vertical joints of face plies and joints staggered 24" in opposing faces. Ribs may be recessed 6" from the top and bottom.	—	—	—	$2^1/_4$[d]
	10-1.2	1" regular gypsum V-edge full-length backing board attached to both sides of wood or metal top and bottom runners with nails or $1^5/_8$" drywall screws at 24" on center. Minimum width of rumors $1^5/_8$". Face layer of $^1/_2$" regular full-length gypsum wallboard laminated to outer faces of backing board with approved laminating compound.	—	—	$4^5/_8$[d]	—

(continued)

TABLE 721.1(2) —continued
RATED FIRE-RESISTANCE PERIODS FOR VARIOUS WALLS AND PARTITIONS [a, o, p]

MATERIAL	ITEM NUMBER	CONSTRUCTION	MINIMUM FINISHED THICKNESS FACE-TO-FACE[b] (inches)			
			4 hours	3 hours	2 hours	1 hour
11. Noncombustible studs-interior partition with plaster each side	11-1.1	$3^1/_4$" × 0.044" (No. 18 carbon sheet steel gage) steel studs spaced 24" on center. $^5/_8$" gypsum plaster on metal lath each side mixed 1:2 by weight, gypsum to sand aggregate.	—	—	—	$4^3/_4$[d]
	11-1.2	$3^3/_8$" × 0.055" (No. 16 carbon sheet steel gage) approved nailable[k] studs spaced 24" on center. $^5/_8$" neat gypsum wood-fibered plaster each side over $^3/_8$" rib metal lath nailed to studs with 6d common nails, 8" on center. Nails driven $1^1/_4$" and bent over.	—	—	$5^5/_8$	—
	11-1.3	4" × 0.044" (No. 18 carbon sheet steel gage) channel-shaped steel studs at 16" on center. On each side approved resilient clips pressed onto stud flange at 16" vertical spacing, $^1/_4$" pencil rods snapped into or wire tied onto outer loop of clips, metal lath wire-tied to pencil rods at 6" intervals, 1" perlite gypsum plaster, each side.	—	$7^5/_8$[d]	—	—
	11-1.4	$2^1/_2$" × 0.044" (No. 18 carbon sheet steel gage) steel studs spaced 16" on center. Wood fibered gypsum plaster mixed 1:1 by weight gypsum to sand aggregate applied on $^3/_4$-pound metal lath wire tied to studs, each side. $^3/_4$" plaster applied over each face, including finish coat.	—	—	$4^1/_4$[d]	—
12. Wood studs-interior partition with plaster each side	12-1.1[l, m]	2" × 4" wood studs 16" on center with $^5/_8$" gypsum plaster on metal lath. Lath attached by 4d common nails bent over or No. 14 gage by $1^1/_4$" by $^3/_4$" crown width staples spaced 6" on center. Plaster mixed 1:$1^1/_2$ for scratch coat and 1:3 for brown coat, by weight, gypsum to sand aggregate.	—	—	—	$5^1/_8$
	12-1.2[l]	2" × 4" wood studs 16" on center with metal lath and $^7/_8$" neat wood-fibered gypsum plaster each side. Lath attached by 6d common nails, 7" on center. Nails driven $1^1/_4$" and bent over.	—	—	$5^1/_2$[d]	—
	12-1.3[l]	2" × 4" wood studs 16" on center with $^3/_8$" perforated or plain gypsum lath and $^1/_2$" gypsum plaster each side. Lath nailed with $1^1/_8$" by No. 13 gage by $^{19}/_{64}$" head plasterboard blued nails, 4" on center. Plaster mixed 1:2 by weight, gypsum to sand aggregate.	—	—	—	$5^1/_4$
	12-1.4[l]	2" × 4" wood studs 16" on center with $^3/_8$" Type X gypsum lath and $^1/_2$" gypsum plaster each side. Lath nailed with $1^1/_8$" by No. 13 gage by $^{19}/_{64}$" head plasterboard blued nails, 5" on center. Plaster mixed 1:2 by weight, gypsum to sand aggregate.	—	—	—	$5^1/_4$
13. Noncombustible studs-interior partition with gypsum wallboard each side	13-1.1	0.018" (No. 25 carbon sheet steel gage) channel-shaped studs 24" on center with one full-length layer of $^5/_8$" Type X gypsum wallboard[e] applied vertically attached with 1"-long No. 6 drywall screws to each stud. Screws are 8" on center around the perimeter and 12" on center on the intermediate stud. Where applied horizontally, the Type X gypsum wallboard shall be attached to $3^5/_8$" studs and the horizontal joints shall be staggered with those on the opposite side. Screws for the horizontal application shall be 8" on center at vertical edges and 12" on center at intermediate studs.	—	—	—	$2^7/_8$[d]
	13-1.2	0.018" (No. 25 carbon sheet steel gage) channel-shaped studs 25" on center with two full-length layers of $^1/_2$" Type X gypsum wallboard[e] applied vertically each side. First layer attached with 1"-long, No. 6 drywall screws, 8" on center around the perimeter and 12" on center on the intermediate stud. Second layer applied with vertical joints offset one stud space from first layer using $1^5/_8$" long, No. 6 drywall screws spaced 9" on center along vertical joints, 12" on center at intermediate studs and 24" on center along top and bottom runners.	—	—	$3^5/_8$[d]	—
	13-1.3	0.055" (No. 16 carbon sheet steel gage) approved nailable metal studs[e] 24" on center with full-length $^5/_8$" Type X gypsum wallboard[e] applied vertically and nailed 7" on center with 6d cement-coated common nails. Approved metal fastener grips used with nails at vertical butt joints along studs.	—	—	—	$4^7/_8$

(continued)

TABLE 721.1(2)—continued
RATED FIRE-RESISTANCE PERIODS FOR VARIOUS WALLS AND PARTITIONS [a, o, p]

MATERIAL	ITEM NUMBER	CONSTRUCTION	MINIMUM FINISHED THICKNESS FACE-TO-FACE[b] (Inches)			
			4 hours	3 hours	2 hours	1 hour
14. Wood studs-interior partition with gypsum wallboard each side	14-1.1[h, m]	2" × 4" wood studs 16" on center with two layers of $^3/_8$" regular gypsum wallboard[e] each side, 4d cooler[n] or wallboard[n] nails at 8" on center first layer, 5d cooler[n] or wallboard[n] nails at 8" on center second layer with laminating compound between layers, joints staggered. First layer applied full length vertically, second layer applied horizontally or vertically.	—	—	—	5
	14-1.2[l, m]	2" × 4" wood studs 16" on center with two layers $^1/_2$" regular gypsum wallboard[e] applied vertically or horizontally each side[k], joints staggered. Nail base layer with 5d cooler[n] or wallboard[n] nails at 8" on center face layer with 8d cooler[n] or wallboard[n] nails at 8" on center.	—	—	—	$5^1/_2$
	14-1.3[l, m]	2" × 4" wood studs 24" on center with $^5/_8$" Type X gypsum wallboard[e] applied vertically or horizontally nailed with 6d cooler[n] or wallboard[n] nails at 7" on center with end joints on nailing members. Stagger joints each side.	—	—	—	$4^3/_4$
	14-1.4[l]	2" × 4" fire-retardant-treated wood studs spaced 24" on center with one layer of $^5/_8$" Type X gypsum wallboard[e] applied with face paper grain (long dimension) parallel to studs. Wallboard attached with 6d cooler[n] or wallboard[n] nails at 7" on center.	—	—	—	$4^3/_4$[d]
	14-1.5[l, m]	2" × 4" wood studs 16" on center with two layers $^5/_8$" Type X gypsum wallboard[e] each side. Base layers applied vertically and nailed with 6d cooler[n] or wallboard[n] nails at 9" on center. Face layer applied vertically or horizontally and nailed with 8d cooler[n] or wallboard[n] nails at 7" on center. For nail-adhesive application, base layers are nailed 6" on center. Face layers applied with coating of approved wallboard adhesive and nailed 12" on center.	—	—	6	—
	14-1.6[l]	2" × 3" fire-retardant-treated wood studs spaced 24" on center with one layer of $^5/_8$" Type X gypsum wallboard[e] applied with face paper grain (long dimension) at right angles to studs. Wallboard attached with 6d cement-coated box nails spaced 7" on center.	—	—	—	$3^5/_8$[d]
15. Exterior or interior walls (continued)	15-1.1[l, m]	Exterior surface with $^3/_4$" drop siding over $^1/_2$" gypsum sheathing on 2" × 4" wood studs at 16" on center, interior surface treatment as required for 1-hour-rated exterior or interior 2" × 4" wood stud partitions. Gypsum sheathing nailed with $1^3/_4$" by No. 11 gage by $^7/_{16}$" head galvanized nails at 8" on center. Siding nailed with 7d galvanized smooth box nails.	—	—	—	Varies
	15-1.2[l, m]	2" × 4" wood studs 16" on center with metal lath and $^3/_4$" cement plaster on each side. Lath attached with 6d common nails 7" on center driven to 1" minimum penetration and bent over. Plaster mix 1:4 for scratch coat and 1:5 for brown coat, by volume, cement to sand.	—	—	—	$5^3/_8$
	15-1.3[l, m]	2" × 4" wood studs 16" on center with $^7/_8$" cement plaster (measured from the face of studs) on the exterior surface with interior surface treatment as required for interior wood stud partitions in this table. Plaster mix 1:4 for scratch coat and 1:5 for brown coat, by volume, cement to sand.	—	—	—	Varies
	15-1.4	$3^5/_8$" No. 16 gage noncombustible studs 16" on center with $^7/_8$" cement plaster (measured from the face of the studs) on the exterior surface with interior surface treatment as required for interior, nonbearing, noncombustible stud partitions in this table. Plaster mix 1:4 for scratch coat and 1:5 for brown coat, by volume, cement to sand.	—	—	—	Varies[d]

(continued)

TABLE 721.1(2)—continued
RATED FIRE-RESISTANCE PERIODS FOR VARIOUS WALLS AND PARTITIONS [a, o, p]

MATERIAL	ITEM NUMBER	CONSTRUCTION	MINIMUM FINISHED THICKNESS FACE-TO-FACE[b] (inches)			
			4 hours	3 hours	2 hours	1 hour
15. Exterior or interior walls (continued)	15-1.5[m]	$2^1/_4$" × $3^3/_4$" clay face brick with cored holes over $^1/_2$" gypsum sheathing on exterior surface of 2" × 4" wood studs at 16" on center and two layers $^5/_8$" Type X gypsum wallboard[e] on interior surface. Sheathing placed horizontally or vertically with vertical joints over studs nailed 6" on center with $1^3/_4$" × No. 11 gage by $^7/_{16}$" head galvanized nails. Inner layer of wallboard placed horizontally or vertically and nailed 8" on center with 6d cooler[n] or wallboard[n] nails. Outer layer of wallboard placed horizontally or vertically and nailed 8" on center with 8d cooler[n] or wallboard[n] nails. Joints staggered with vertical joints over studs. Outer layer joints taped and finished with compound. Nail heads covered with joint compound. 0.035 inch (No. 20 galvanized sheet gage) corrugated galvanized steel wall ties $^3/_4$" by $6^5/_8$" attached to each stud with two 8d cooler[n] or wallboard[n] nails every sixth course of bricks.	—	—	10	—
	15-1.6[l, m]	2" × 6" fire-retardant-treated wood studs 16" on center. Interior face has two layers of $^5/_8$" Type X gypsum with the base layer placed vertically and attached with 6d box nails 12" on center. The face layer is placed horizontally and attached with 8d box nails 8" on center at joints and 12" on center elsewhere. The exterior face has a base layer of $^5/_8$" Type X gypsum sheathing placed vertically with 6d box nails 8" on center at joints and 12" on center elsewhere. An approved building paper is next applied, followed by self-furred exterior lath attached with $2^1/_2$", No. 12 gage galvanized roofing nails with a $^3/_8$" diameter head and spaced 6" on center along each stud. Cement plaster consisting of a $^1/_2$" brown coat is then applied. The scratch coat is mixed in the proportion of 1:3 by weight, cement to sand with 10 pounds of hydrated lime and 3 pounds of approved additives or admixtures per sack of cement. The brown coat is mixed in the proportion of 1:4 by weight, cement to sand with the same amounts of hydrated lime and approved additives or admixtures used in the scratch coat.	—	—	$8^1/_4$	—
	15-1.7[l, m]	2" × 6" wood studs 16" on center. The exterior face has a layer of $^5/_8$" Type X gypsum sheathing placed vertically with 6d box nails 8" on center at joints and 12" on center elsewhere. An approved building paper is next applied, followed by 1" by No. 18 gage self-furred exterior lath attached with 8d by $2^1/_2$" long galvanized roofing nails spaced 6" on center along each stud. Cement plaster consisting of a $^1/_2$" scratch coat, a bonding agent and a $^1/_2$" brown coat and a finish coat is then applied. The scratch coat is mixed in the proportion of 1:3 by weight, cement to sand with 10 pounds of hydrated lime and 3 pounds of approved additives or admixtures per sack of cement. The brown coat is mixed in the proportion of 1:4 by weight, cement to sand with the same amounts of hydrated lime and approved additives or admixtures used in the scratch coat. The interior is covered with $^3/_8$" gypsum lath with 1" hexagonal mesh of 0.035 inch (No. 20 B.W. gage) woven wire lath furred out $^5/_{16}$" and 1" perlite or vermiculite gypsum plaster. Lath nailed with $1^1/_8$" by No. 13 gage by $^{19}/_{64}$" head plasterboard glued nails spaced 5" on center. Mesh attached by $1^3/_4$" by No. 12 gage by $^3/_8$" head nails with $^3/_8$" furrings, spaced 8" on center. The plaster mix shall not exceed 100 pounds of gypsum to $2^1/_2$ cubic feet of aggregate.	—	—	$8^3/_8$	—

(continued)

TABLE 721.1(2)—continued
RATED FIRE-RESISTANCE PERIODS FOR VARIOUS WALLS AND PARTITIONS [a, o, p]

MATERIAL	ITEM NUMBER	CONSTRUCTION	MINIMUM FINISHED THICKNESS FACE-TO-FACE[b] (inches)			
			4 hours	3 hours	2 hours	1 hour
15. Exterior or interior walls (continued)	15-1.8[l, m]	2" × 6" wood studs 16" on center. The exterior face has a layer of $^5/_8$" Type X gypsum sheathing placed vertically with 6d box nails 8" on center at joints and 12" on center elsewhere. An approved building paper is next applied, followed by $1^1/_2$" by No. 17 gage self-furred exterior lath attached with 8d by $2^1/_2$" long galvanized roofing nails spaced 6" on center along each stud. Cement plaster consisting of a $^1/_2$" scratch coat, and a $^1/_2$" brown coat is then applied. The plaster may be placed by machine. The scratch coat is mixed in the proportion of 1:4 by weight, plastic cement to sand. The brown coat is mixed in the proportion of 1:5 by weight, plastic cement to sand. The interior is covered with $^3/_8$" gypsum lath with 1" hexagonal mesh of No. 20 gage woven wire lath furred out $^5/_{16}$" and 1" perlite or vermiculite gypsum plaster. Lath nailed with $1^1/_8$" by No. 13 gage by $^{19}/_{64}$" head plasterboard glued nails spaced 5" on center. Mesh attached by $1^3/_4$" by No. 12 gage by $^3/_8$" head nails with $^3/_8$" furrings, spaced 8" on center. The plaster mix shall not exceed 100 pounds of gypsum to $2^1/_2$ cubic feet of aggregate.	—	—	$8^3/_8$	—
	15-1.9	4" No. 18 gage, nonload-bearing metal studs, 16" on center, with 1" Portland cement lime plaster (measured from the back side of the $^3/_4$-pound expanded metal lath) on the exterior surface. Interior surface to be covered with 1" of gypsum plaster on $^3/_4$-pound expanded metal lath proportioned by weight-1:2 for scratch coat, 1:3 for brown, gypsum to sand. Lath on one side of the partition fastened to $^1/_4$" diameter pencil rods supported by No. 20 gage metal clips, located 16" on center vertically, on each stud. 3" thick mineral fiber insulating batts friction fitted between the studs.	—	—	$6^1/_2$[d]	—
	15-1.10	Steel studs 0.060" thick, 4" deep or 6" at 16" or 24" centers, with $^1/_2$" Glass Fiber Reinforced Concrete (GFRC) on the exterior surface. GFRC is attached with flex anchors at 24" on center, with 5" leg welded to studs with two $^1/_2$"-long flare-bevel welds, and 4" foot attached to the GFRC skin with $^5/_8$" thick GFRC bonding pads that extend $2^1/_2$" beyond the flex anchor foot on both sides. Interior surface to have two layers of $^1/_2$" Type X gypsum wallboard.[e] The first layer of wallboard to be attached with 1"-long Type S buglehead screws spaced 24" on center and the second layer is attached with $1^5/_8$"-long Type S screws spaced at 12" on center. Cavity is to be filled with 5" of 4 pcf (nominal) mineral fiber batts. GFRC has $1^1/_2$" returns packed with mineral fiber and caulked on the exterior.	—	—	$6^1/_2$	—
	15-1.11	Steel studs 0.060" thick, 4" deep or 6" at 16" or 24" centers, respectively, with $^1/_2$" Glass Fiber Reinforced Concrete (GFRC) on the exterior surface. GFRC is attached with flex anchors at 24" on center, with 5" leg welded to studs with two $^1/_2$"-long flare-bevel welds, and 4" foot attached to the GFRC skin with $^5/_8$" -thick GFRC bonding pads that extend $2^1/_2$" beyond the flex anchor foot on both sides. Interior surface to have one layer of $^5/_8$" Type X gypsum wallboard[e], attached with $1^1/_4$"-long Type S buglehead screws spaced 12" on center. Cavity is to be filled with 5" of 4 pcf (nominal) mineral fiber batts. GFRC has $1^1/_2$" returns packed with mineral fiber and caulked on the exterior.	—	—	—	$6^1/_8$
	15-1.12[q]	2" × 6" wood studs at 16" with double top plates, single bottom plate; interior and exterior sides covered with $^5/_8$" Type X gypsum wallboard, 4′ wide, applied horizontally or vertically with vertical joints over studs, and fastened with $2^1/_4$" Type S drywall screws, spaced 12" on center. Cavity to be filled with $5^1/_2$" mineral wool insulation.	—	—	—	$6^3/_4$

(continued)

TABLE 721.1(2)—continued
RATED FIRE-RESISTANCE PERIODS FOR VARIOUS WALLS AND PARTITIONS [a, o, p]

MATERIAL	ITEM NUMBER	CONSTRUCTION	MINIMUM FINISHED THICKNESS FACE-TO-FACE[b] (inches)			
			4 hours	3 hours	2 hours	1 hour
15. Exterior or interior walls (continued)	15-1.13[q]	2" × 6" wood studs at 16" with double top plates, single bottom plate; interior and exterior sides covered with $^5/_8$" Type X gypsum wallboard, 4′ wide, applied vertically with all joints over framing or blocking and fastened with $2^1/_4$" Type S drywall screws, spaced 12" on center. R-19 mineral fiber insulation installed in stud cavity.	—	—	—	$6^3/_4$
	15-1.14[q]	2" × 6" wood studs at 16" with double top plates, single bottom plate; interior and exterior sides covered with $^5/_8$" Type X gypsum wallboard, 4′ wide, applied horizontally or vertically with vertical joints over studs, and fastened with $2^1/_4$" Type S drywall screws, spaced 7" on center.	—	—	—	$6^3/_4$
	15-1.15[q]	2" × 4" wood studs at 16" with double top plates, single bottom plate; interior and exterior sides covered with $^5/_8$" Type X gypsum wallboard and sheathing, respectively, 4′ wide, applied horizontally or vertically with vertical joints over studs, and fastened with $2^1/_4$" Type S drywall screws, spaced 12" on center. Cavity to be filled with $3^1/_2$" mineral wool insulation.	—	—	—	$4^3/_4$
	15-1.16[q]	2" x 6" wood studs at 24" centers with double top plates, single bottom plate; interior and exterior side covered with two layers of $^5/_8$" Type X gypsum wallboard, 4' wide, applied horizontally with vertical joints over studs. Base layer fastened with $2^1/_4$" Type S drywall screws, spaced 24" on center and face layer fastened with Type S drywall screws, spaced 8" on center, wallboard joints covered with paper tape and joint compound, fastener heads covered with joint compound. Cavity to be filled with $5^1/_2$" mineral wool insulation.	—	—	8	—
	15-2.1[d]	$3^5/_8$" No. 16 gage steel studs at 24" on center or 2" × 4" wood studs at 24" on center. Metal lath attached to the exterior side of studs with minimum 1" long No. 6 drywall screws at 6" on center and covered with minimum $^3/_4$" thick Portland cement plaster. Thin veneer brick units of clay or shale complying with ASTM C 1088, Grade TBS or better, installed in running bond in accordance with Section 1405.10. Combined total thickness of the Portland cement plaster, mortar and thin veneer brick units shall be not less than $1^3/_4$". Interior side covered with one layer of $^5/_8$" thick Type X gypsum wallboard attached to studs with 1" long No. 6 drywall screws at 12" on center.	—	—	—	6
	15-2.2[d]	$3^5/_8$" No. 16 gage steel studs at 24" on center or 2" × 4" wood studs at 24" on center. Metal lath attached to the exterior side of studs with minimum 1" long No. 6 drywall screws at 6" on center and covered with minimum $^3/_4$" thick Portland cement plaster. Thin veneer brick units of clay or shale complying with ASTM C 1088, Grade TBS or better, installed in running bond in accordance with Section 1405.10. Combined total thickness of the Portland cement plaster, mortar and thin veneer brick units shall be not less than 2". Interior side covered with two layers of $^5/_8$" thick Type X gypsum wallboard. Bottom layer attached to studs with 1" long No. 6 drywall screws at 24" on center. Top layer attached to studs with $1^5/_8$" long No. 6 drywall screws at 12" on center.	—	—	$6^7/_8$	—
	15-2.3[d]	$3^5/_8$" No. 16 gage steel studs at 16" on center or 2"× 4" wood studs at 16" on center. Where metal lath is used, attach to the exterior side of studs with minimum 1" long No. 6 drywall screws at 6" on center. Brick units of clay or shale not less than $2^5/_8$" thick complying with ASTM C 216 installed in accordance with Section 1405.6 with a minimum 1" airspace. Interior side covered with one layer of $^5/_8$" thick Type X gypsum wallboard attached to studs with 1" long No. 6 drywall screws at 12" on center.	—	—	—	$7^7/_8$

(continued)

TABLE 721.1(2)—continued
RATED FIRE-RESISTANCE PERIODS FOR VARIOUS WALLS AND PARTITIONS [a, o, p]

MATERIAL	ITEM NUMBER	CONSTRUCTION	MINIMUM FINISHED THICKNESS FACE-TO-FACE[b] (inches)			
			4 hours	3 hours	2 hours	1 hour
15. Exterior or interior walls	15-2.4[d]	$3^5/_8$" No. 16 gage steel studs at 16" on center or 2" × 4" wood studs at 16" on center. Where metal lath is used, attach to the exterior side of studs with minimum 1" long No. 6 drywall screws at 6" on center. Brick units of clay or shale not less than $2^5/_8$" thick complying with ASTM C 216 installed in accordance with Section 1405.6 with a minimum 1" airspace. Interior side covered with two layers of $^5/_8$" thick Type X gypsum wallboard. Bottom layer attached to studs with 1" long No. 6 drywall screws at 24" on center. Top layer attached to studs with $1^5/_8$" long No. 6 drywall screws at 12" on center.	—	—	$8^1/_2$	—
16. Exterior walls rated for fire resistance from the inside only in accordance with Section 705.5.	16-1.1[q]	2" × 4" wood studs at 16" centers with double top plates, single bottom plate; interior side covered with $^5/_8$" Type X gypsum wallboard, 4" wide, applied horizontally unblocked, and fastened with $2^1/_4$" Type S drywall screws, spaced 12" on center, wallboard joints covered with paper tape and joint compound, fastener heads covered with joint compound. Exterior covered with $^3/_8$" wood structural panels, applied vertically, horizontal joints blocked and fastened with 6d common nails (bright) — 12" on center in the field, and 6" on center panel edges. Cavity to be filled with $3^1/_2$" mineral wool insulation. Rating established for exposure from interior side only.	—	—	—	$4^1/_2$
	16-1.2[q]	2" × 6" wood studs at 16" centers with double top plates, single bottom plate; interior side covered with $^5/_8$" Type X gypsum wallboard, 4" wide, applied horizontally or vertically with vertical joints over studs and fastened with $2^1/_4$" Type S drywall screws, spaced 12" on center, wallboard joints covered with paper tape and joint compound, fastener heads covered with joint compound, exterior side covered with $^7/_{16}$" wood structural panels fastened with 6d common nails (bright) spaced 12" on center in the field and 6" on center along the panel edges. Cavity to be filled with $5^1/_2$" mineral wool insulation. Rating established from the gypsum-covered side only.	—	—	—	$6^9/_{16}$
	16-1.3[q]	2" × 6" wood studs at 16" centers with double top plates, single bottom plates; interior side covered with $^5/_8$" Type X gypsum wallboard, 4" wide, applied vertically with all joints over framing or blocking and fastened with $2^1/_4$" Type S drywall screws spaced 7" on center. Joints to be covered with tape and joint compound. Exterior covered with $^3/_8$" wood structural panels, applied vertically with edges over framing or blocking and fastened with 6d common nails (bright) at 12" on center in the field and 6" on center on panel edges. R-19 mineral fiber insulation installed in stud cavity. Rating established from the gypsum-covered side only.	—	—	—	$6^1/_2$

For SI: 1 inch = 25.4 mm, 1 square inch = 645.2 mm^2, 1 cubic foot = 0.0283 m^3.

a. Staples with equivalent holding power and penetration shall be permitted to be used as alternate fasteners to nails for attachment to wood framing.

b. Thickness shown for brick and clay tile is nominal thicknesses unless plastered, in which case thicknesses are net. Thickness shown for concrete masonry and clay masonry is equivalent thickness defined in Section 722.3.1 for concrete masonry and Section 722.4.1.1 for clay masonry. Where all cells are solid grouted or filled with silicone-treated perlite loose-fill insulation; vermiculite loose-fill insulation; or expanded clay, shale or slate lightweight aggregate, the equivalent thickness shall be the thickness of the block or brick using specified dimensions as defined in Chapter 21. Equivalent thickness shall include the thickness of applied plaster and lath or gypsum wallboard, where specified.

c. For units in which the net cross-sectional area of cored brick in any plane parallel to the surface containing the cores is not less than 75 percent of the gross cross-sectional area measured in the same plane.

d. Shall be used for nonbearing purposes only.

e. For all of the construction with gypsum wallboard described in this table, gypsum base for veneer plaster of the same size, thickness and core type shall be permitted to be substituted for gypsum wallboard, provided attachment is identical to that specified for the wallboard, and the joints on the face layer are reinforced and the entire surface is covered with not less than $^1/_{16}$-inch gypsum veneer plaster.

f. The fire-resistance time period for concrete masonry units meeting the equivalent thicknesses required for a 2-hour *fire-resistance rating* in Item 3, and having a thickness of not less than $7^5/_8$ inches is 4 hours where cores that are not grouted are filled with silicone-treated perlite loose-fill insulation; vermiculite loose-fill insulation; or expanded clay, shale or slate lightweight aggregate, sand or slag having a maximum particle size of $^3/_8$ inch.

g. The *fire-resistance rating* of concrete masonry units composed of a combination of aggregate types or where plaster is applied directly to the concrete masonry shall be determined in accordance with ACI 216.1/TMS 0216. Lightweight aggregates shall have a maximum combined density of 65 pounds per cubic foot.

(continued)

TABLE 721.1(2)—continued
RATED FIRE-RESISTANCE PERIODS FOR VARIOUS WALLS AND PARTITIONS [a, o]

h. See Note b. The equivalent thickness shall be permitted to include the thickness of cement plaster or 1.5 times the thickness of gypsum plaster applied in accordance with the requirements of Chapter 25.
i. Concrete walls shall be reinforced with horizontal and vertical temperature reinforcement as required by Chapter 19.
j. Studs are welded truss wire studs with 0.18 inch (No. 7 B.W. gage) flange wire and 0.18 inch (No. 7 B.W. gage) truss wires.
k. Nailable metal studs consist of two channel studs spot welded back to back with a crimped web forming a nailing groove.
l. Wood structural panels shall be permitted to be installed between the fire protection and the wood studs on either the interior or exterior side of the wood frame assemblies in this table, provided the length of the fasteners used to attach the fire protection is increased by an amount not less than the thickness of the wood structural panel.
m. For studs with a slenderness ratio, l_e/d, greater than 33, the design stress shall be reduced to 78 percent of allowable F'_c. For studs with a slenderness ratio, l_e/d, not exceeding 33, the design stress shall be reduced to 78 percent of the adjusted stress F'_c calculated for studs having a slenderness ratio l_e/d of 33.
n. For properties of cooler or wallboard nails, see ASTM C 514, ASTM C 547 or ASTM F 1667.
o. Generic *fire-resistance ratings* (those not designated as PROPRIETARY* in the listing) in the GA 600 shall be accepted as if herein listed.
p. NCMA TEK 5-8A shall be permitted for the design of fire walls.
q. The design stress of studs shall be equal to a maximum of 100 percent of the allowable F'_c calculated in accordance with Section 2306.

TABLE 721.1(3)
MINIMUM PROTECTION FOR FLOOR AND ROOF SYSTEMS[a, q]

FLOOR OR ROOF CONSTRUCTION	ITEM NUMBER	CEILING CONSTRUCTION	THICKNESS OF FLOOR OR ROOF SLAB (inches)				MINIMUM THICKNESS OF CEILING (inches)			
			4 hours	3 hours	2 hours	1 hour	4 hours	3 hours	2 hours	1 hour
1. Siliceous aggregate concrete	1-1.1	Slab (no ceiling required). Minimum cover over nonprestressed reinforcement shall be not less than $^3/_4$" [b].	7.0	6.2	5.0	3.5	—	—	—	—
2. Carbonate aggregate concrete	2-1.1		6.6	5.7	4.6	3.2	—	—	—	—
3. Sand-lightweight concrete	3-1.1		5.4	4.6	3.8	2.7	—	—	—	—
4. Lightweight concrete	4-1.1		5.1	4.4	3.6	2.5	—	—	—	—
5. Reinforced concrete	5-1.1	Slab with suspended ceiling of vermiculite gypsum plaster over metal lath attached to $^3/_4$" cold-rolled channels spaced 12" on center. Ceiling located 6" minimum below joists.	3	2	—	—	1	$^3/_4$	—	—
	5-2.1	$^3/_8$" Type X gypsum wallboard[c] attached to 0.018 inch (No. 25 carbon sheet steel gage) by $^7/_8$" deep by $2^5/_8$" hat-shaped galvanized steel channels with 1"-long No. 6 screws. The channels are spaced 24" on center, span 35" and are supported along their length at 35" intervals by 0.033" (No. 21 galvanized sheet gage) galvanized steel flat strap hangers having formed edges that engage the lips of the channel. The strap hangers are attached to the side of the concrete joists with $^5/_{32}$" by $1^1/_4$" long power-driven fasteners. The wallboard is installed with the long dimension perpendicular to the channels. End joints occur on channels and supplementary channels are installed parallel to the main channels, 12" each side, at end joint occurrences. The finished ceiling is located approximately 12" below the soffit of the floor slab.	—	—	$2^1/_2$	—	—	—	$^5/_8$	—

(continued)

TABLE 721.1(3)—continued
MINIMUM PROTECTION FOR FLOOR AND ROOF SYSTEMS[a, q]

FLOOR OR ROOF CONSTRUCTION	ITEM NUMBER	CEILING CONSTRUCTION	THICKNESS OF FLOOR OR ROOF SLAB (inches)				MINIMUM THICKNESS OF CEILING (inches)			
			4 hours	3 hours	2 hours	1 hour	4 hours	3 hours	2 hours	1 hour
6. Steel joists constructed with a poured reinforced concrete slab on metal lath forms or steel form units[d, e]	6-1.1	Gypsum plaster on metal lath attached to the bottom cord with single No. 16 gage or doubled No. 18 gage wire ties spaced 6" on center. Plaster mixed 1:2 for scratch coat, 1:3 for brown coat, by weight, gypsum-to-sand aggregate for 2-hour system. For 3-hour system plaster is neat.	—	—	$2^1/_2$	$2^1/_4$	—	—	$^3/_4$	$^5/_8$
	6-2.1	Vermiculite gypsum plaster on metal lath attached to the bottom chord with single No.16 gage or doubled 0.049-inch (No. 18 B.W. gage) wire ties 6" on center.	—	2	—	—	—	$^5/_8$	—	—
	6-3.1	Cement plaster over metal lath attached to the bottom chord of joists with single No. 16 gage or doubled 0.049" (No. 18 B.W. gage) wire ties spaced 6" on center. Plaster mixed 1:2 for scratch coat, 1:3 for brown coat for 1-hour system and 1:1 for scratch coat, 1:1 $^1/_2$ for brown coat for 2-hour system, by weight, cement to sand.	—	—	—	2	—	—	—	$^5/_8$[f]
	6-4.1	Ceiling of $^5/_8$" Type X wallboard[c] attached to $^7/_8$" deep by $2^5/_8$" by 0.021 inch (No. 25 carbon sheet steel gage) hat-shaped furring channels 12" on center with 1" long No. 6 wallboard screws at 8" on center. Channels wire tied to bottom chord of joists with doubled 0.049 inch (No. 18 B.W. gage) wire or suspended below joists on wire hangers.[g]	—	—	$2^1/_2$	—	—	—	$^5/_8$	—
	6-5.1	Wood-fibered gypsum plaster mixed 1:1 by weight gypsum to sand aggregate applied over metal lath. Lath tied 6" on center to $^3/_4$" channels spaced $13^1/_2$" on center. Channels secured to joists at each intersection with two strands of 0.049 inch (No. 18 B.W. gage) galvanized wire.	—	—	$2^1/_2$	—	—	—	$^3/_4$	—
7. Reinforced concrete slabs and joists with hollow clay tile fillers laid end to end in rows $2^1/_2$" or more apart; reinforcement placed between rows and concrete cast around and over tile.	7-1.1	$^5/_8$" gypsum plaster on bottom of floor or roof construction.	—	—	8[h]	—	—	—	$^5/_8$	—
	7-1.2	None	—	—	—	$5^1/_2$[i]	—	—	—	—
8. Steel joists constructed with a reinforced concrete slab on top poured on a $^1/_2$" deep steel deck.[e]	8-1.1	Vermiculite gypsum plaster on metal lath attached to $^3/_4$" cold-rolled channels with 0.049" (No. 18 B.W. gage) wire ties spaced 6" on center.	$2^1/_2$[j]	—	—	—	$^3/_4$	—	—	—

(continued)

TABLE 721.1(3)—continued
MINIMUM PROTECTION FOR FLOOR AND ROOF SYSTEMS[a, q]

FLOOR OR ROOF CONSTRUCTION	ITEM NUMBER	CEILING CONSTRUCTION	THICKNESS OF FLOOR OR ROOF SLAB (inches)				MINIMUM THICKNESS OF CEILING (inches)			
			4 hours	3 hours	2 hours	1 hour	4 hours	3 hours	2 hours	1 hour
9. 3" deep cellular steel deck with concrete slab on top. Slab thickness measured to top.	9-1.1	Suspended ceiling of vermiculite gypsum plaster base coat and vermiculite acoustical plaster on metal lath attached at 6" intervals to $^3/_4$" cold-rolled channels spaced 12" on center and secured to $1^1/_2$" cold-rolled channels spaced 36" on center with 0.065" (No. 16 B.W. gage) wire. $1^1/_2$" channels supported by No. 8 gage wire hangers at 36" on center. Beams within envelope and with a $2^1/_2$" airspace between beam soffit and lath have a 4-hour rating.	$2^1/_2$	—	—	—	$1^1/_8$[k]	—	—	—
10. $1^1/_2$"-deep steel roof deck on steel framing. Insulation board, 30 pcf density, composed of wood fibers with cement binders of thickness shown bonded to deck with unified asphalt adhesive. Covered with a Class A or B roof covering.	10-1.1	Ceiling of gypsum plaster on metal lath. Lath attached to $^3/_4$" furring channels with 0.049" (No. 18 B.W. gage) wire ties spaced 6" on center. $^3/_4$" channel saddle tied to 2" channels with doubled 0.065" (No. 16 B.W. gage) wire ties. 2" channels spaced 36" on center suspended 2" below steel framing and saddle-tied with 0.165" (No. 8 B.W. gage) wire. Plaster mixed 1:2 by weight, gypsum-to-sand aggregate.	—	—	$1^7/_8$	1	—	—	$^3/_4$[l]	$^3/_4$[l]
11. $1^1/_2$"-deep steel roof deck on steel-framing wood fiber insulation board, 17.5 pcf density on top applied over a 15-lb asphalt-saturated felt. Class A or B roof covering.	11-1.1	Ceiling of gypsum plaster on metal lath. Lath attached to $^3/_4$" furring channels with 0.049" (No. 18 B.W. gage) wire ties spaced 6" on center. $^3/_4$" channels saddle tied to 2" channels with doubled 0.065" (No. 16 B.W. gage) wire ties. 2" channels spaced 36" on center suspended 2" below steel framing and saddle tied with 0.165" (No. 8 B.W. gage) wire. Plaster mixed 1:2 for scratch coat and 1:3 for brown coat, by weight, gypsum-to-sand aggregate for 1-hour system. For 2-hour system, plaster mix is 1:2 by weight, gypsum-to-sand aggregate.	—	—	$1^1/_2$	1	—	—	$^7/_8$[g]	$^3/_4$[l]

(continued)

TABLE 721.1(3) —continued
MINIMUM PROTECTION FOR FLOOR AND ROOF SYSTEMS[a, q]

FLOOR OR ROOF CONSTRUCTION	ITEM NUMBER	CEILING CONSTRUCTION	THICKNESS OF FLOOR OR ROOF SLAB (inches)				MINIMUM THICKNESS OF CEILING (inches)			
			4 hours	3 hours	2 hours	1 hour	4 hours	3 hours	2 hours	1 hour
12. $1^1/_2$" deep steel roof deck on steel-framing insulation of rigid board consisting of expanded perlite and fibers impregnated with integral asphalt waterproofing; density 9 to 12 pcf secured to metal roof deck by $^1/_2$" wide ribbons of waterproof, cold-process liquid adhesive spaced 6" apart. Steel joist or light steel construction with metal roof deck, insulation, and Class A or B built-up roof covering.[e]	12-1.1	Gypsum-vermiculite plaster on metal lath wire tied at 6" intervals to $^3/_4$" furring channels spaced 12" on center and wire tied to 2" runner channels spaced 32" on center. Runners wire tied to bottom chord of steel joists.	—	—	1	—	—	—	$^7/_8$	—
13. Double wood floor over wood joists spaced 16" on center.[m,n]	13-1.1	Gypsum plaster over $^3/_8$" Type X gypsum lath. Lath initially applied with not less than four $1^1/_8$" by No. 13 gage by $^{19}/_{64}$" head plasterboard blued nails per bearing. Continuous stripping over lath along all joist lines. Stripping consists of 3" wide strips of metal lath attached by $1^1/_2$" by No. 11 gage by $^1/_2$" head roofing nails spaced 6" on center. Alternate stripping consists of 3" wide 0.049" diameter wire stripping weighing 1 pound per square yard and attached by No.16 gage by $1^1/_2$" by $^3/_4$" crown width staples, spaced 4" on center. Where alternate stripping is used, the lath nailing shall consist of two nails at each end and one nail at each intermediate bearing. Plaster mixed 1:2 by weight, gypsum-to-sand aggregate.	—	—	—	—	—	—	—	$^7/_8$
	13-1.2	Cement or gypsum plaster on metal lath. Lath fastened with $1^1/_2$" by No. 11 gage by $^7/_{16}$" head barbed shank roofing nails spaced 5" on center. Plaster mixed 1:2 for scratch coat and 1:3 for brown coat, by weight, cement to sand aggregate.	—	—	—	—	—	—	—	$^5/_8$
	13-1.3	Perlite or vermiculite gypsum plaster on metal lath secured to joists with $1^1/_2$" by No. 11 gage by $^7/_{16}$" head barbed shank roofing nails spaced 5" on center.	—	—	—	—	—	—	—	$^5/_8$
	13-1.4	$^1/_2$" Type X gypsum wallboard[c] nailed to joists with 5d cooler[o] or wallboard[o] nails at 6" on center. End joints of wallboard centered on joists.	—	—	—	—	—	—	—	$^1/_2$

(continued)

TABLE 721.1(3) —continued
MINIMUM PROTECTION FOR FLOOR AND ROOF SYSTEMS[a, q]

FLOOR OR ROOF CONSTRUCTION	ITEM NUMBER	CEILING CONSTRUCTION	THICKNESS OF FLOOR OR ROOF SLAB (inches)				MINIMUM THICKNESS OF CEILING (inches)			
			4 hours	3 hours	2 hours	1 hour	4 hours	3 hours	2 hours	1 hour
14. Plywood stressed skin panels consisting of $^5/_8$" -thick interior C-D (exterior glue) top stressed skin on 2" × 6" nominal (minimum) stringers. Adjacent panel edges joined with 8d common wire nails spaced 6" on center. Stringers spaced 12" maximum on center.	14-1.1	$^1/_2$" -thick wood fiberboard weighing 15 to 18 pounds per cubic foot installed with long dimension parallel to stringers or $^3/_8$" C-D (exterior glue) plywood glued and/or nailed to stringers. Nailing to be with 5d cooler[o] or wallboard[o] nails at 12" on center. Second layer of $^1/_2$" Type X gypsum wallboard[c] applied with long dimension perpendicular to joists and attached with 8d cooler[o] or wallboard[o] nails at 6" on center at end joints and 8" on center elsewhere. Wallboard joints staggered with respect to fiberboard joints.	—	—	—	—	—	—	—	1
15. Vermiculite concrete slab proportioned 1:4 (Portland cement to vermiculite aggregate) on a $1^1/_2$" -deep steel deck supported on individually protected steel framing. Maximum span of deck 6′-10" where deck is less than 0.019 inch (No. 26 carbon steel sheet gage) or greater. Slab reinforced with 4" × 8" 0.109/0.083" (No. $^{12}/_{14}$ B.W. gage) welded wire mesh.	15-1.1	None	—	—	—	3[j]	—	—	—	—
16. Perlite concrete slab proportioned 1:6 (Portland cement to perlite aggregate) on a $1^1/_4$" -deep steel deck supported on individually protected steel framing. Slab reinforced with 4" × 8" 0.109/0.083" (No. $^{12}/_{14}$ B.W. gage) welded wire mesh.	16-1.1	None	—	—	—	$3^1/_2$[j]	—	—	—	—

(continued)

TABLE 721.1(3)—continued
MINIMUM PROTECTION FOR FLOOR AND ROOF SYSTEMS[a, q]

FLOOR OR ROOF CONSTRUCTION	ITEM NUMBER	CEILING CONSTRUCTION	THICKNESS OF FLOOR OR ROOF SLAB (inches)				MINIMUM THICKNESS OF CEILING (inches)			
			4 hours	3 hours	2 hours	1 hour	4 hours	3 hours	2 hours	1 hour
17. Perlite concrete slab proportioned 1:6 (Portland cement to perlite aggregate) on a $^9/_{16}$"-deep steel deck supported by steel joists 4′ on center. Class A or B roof covering on top.	17-1.1	Perlite gypsum plaster on metal lath wire tied to $^3/_4$" furring channels attached with 0.065" (No. 16 B.W. gage) wire ties to lower chord of joists.	—	2[p]	2[p]	—	—	$^7/_8$	$^3/_4$	—
18. Perlite concrete slab proportioned 1:6 (Portland cement to perlite aggregate) on $1^1/_4$" -deep steel deck supported on individually protected steel framing. Maximum span of deck 6′-10" where deck is less than 0.019" (No. 26 carbon sheet steel gage) and 8′-0" where deck is 0.019" (No. 26 carbon sheet steel gage) or greater. Slab reinforced with 0.042" (No. 19 B.W. gage) hexagonal wire mesh. Class A or B roof covering on top.	18-1.1	None	—	$2^1/_4$[p]	$2^1/_4$[p]	—	—	—	—	—
19. Floor and beam construction consisting of 3" -deep cellular steel floor unit mounted on steel members with 1:4 (proportion of Portland cement to perlite aggregate) perlite-concrete floor slab on top.	19-1.1	Suspended envelope ceiling of perlite gypsum plaster on metal lath attached to $^3/_4$" cold-rolled channels, secured to $1^1/_2$" cold-rolled channels spaced 42" on center supported by 0.203 inch (No. 6 B.W. gage) wire 36" on center. Beams in envelope with 3" minimum airspace between beam soffit and lath have a 4-hour rating.	2[p]	—	—	—	1[1]	—	—	—

(continued)

TABLE 721.1(3)—continued
MINIMUM PROTECTION FOR FLOOR AND ROOF SYSTEMS[a, q]

FLOOR OR ROOF CONSTRUCTION	ITEM NUMBER	CEILING CONSTRUCTION	THICKNESS OF FLOOR OR ROOF SLAB (inches)				MINIMUM THICKNESS OF CEILING (inches)			
			4 hours	3 hours	2 hours	1 hour	4 hours	3 hours	2 hours	1 hour
20. Perlite concrete proportioned 1:6 (Portland cement to perlite aggregate) poured to $^1/_8$" thickness above top of corrugations of $1^5/_{16}$" -deep galvanized steel deck maximum span 8′-0" for 0.024" (No. 24 galvanized sheet gage) or 6′ 0" for 0.019" (No. 26 galvanized sheet gage) with deck supported by individually protected steel framing. Approved polystyrene foam plastic insulation board having a flame spread not exceeding 75 (1" to 4" thickness) with vent holes that approximate 3 percent of the board surface area placed on top of perlite slurry. A 2′ by 4′ insulation board contains six $2^3/_4$" diameter holes. Board covered with $2^1/_4$" minimum perlite concrete slab. Slab reinforced with mesh consisting of 0.042" (No. 19 B.W. gage) galvanized steel wire twisted together to form 2" hexagons with straight 0.065" (No. 16 B.W. gage) galvanized steel wire woven into mesh and spaced 3". Alternate slab reinforcement shall be permitted to consist of 4" × 8", 0.109/0.238" (No. 12/4 B.W. gage), or 2" × 2", 0.083/0.083" (No. 14/14 B.W. gage) welded wire fabric. Class A or B roof covering on top.	20-1.1	None	—	—	Varies	—	—	—	—	—
21. Wood joists, wood I-joists, floor trusses and flat or pitched roof trusses spaced a maximum 24" o.c. with $^1/_2$" wood structural panels with exterior glue applied at right angles to top of joist or top chord of trusses with 8d nails. The wood structural panel thickness shall be not less than nominal $^1/_2$" nor less than required by Chapter 23.	21-1.1	Base layer $^5/_8$" Type X gypsum wallboard applied at right angles to joist or truss 24" o.c. with $1^1/_4$" Type S or Type W drywall screws 24" o.c. Face layer $^5/_8$" Type X gypsum wallboard or veneer base applied at right angles to joist or truss through base layer with $1^7/_8$" Type S or Type W drywall screws 12" o.c. at joints and intermediate joist or truss. Face layer Type G drywall screws placed 2" back on either side of face layer end joints, 12" o.c.	—	—	—	Varies	—	—	—	$1^1/_4$

(continued)

TABLE 721.1(3)—continued
MINIMUM PROTECTION FOR FLOOR AND ROOF SYSTEMS[a, q]

FLOOR OR ROOF CONSTRUCTION	ITEM NUMBER	CEILING CONSTRUCTION	THICKNESS OF FLOOR OR ROOF SLAB (inches)				MINIMUM THICKNESS OF CEILING (inches)			
			4 hours	3 hours	2 hours	1 hour	4 hours	3 hours	2 hours	1 hour
22. Steel joists, floor trusses and flat or pitched roof trusses spaced a maximum 24" o.c. with $^1/_2$" wood structural panels with exterior glue applied at right angles to top of joist or top chord of trusses with No. 8 screws. The wood structural panel thickness shall be not less than nominal $^1/_2$" nor less than required by Chapter 23.	22-1.1	Base layer $^5/_8$" Type X gypsum board applied at right angles to steel framing 24" on center with 1" Type S drywall screws spaced 24" on center. Face layer $^5/_8$" Type X gypsum board applied at right angles to steel framing attached through base layer with $1^5/_8$" Type S drywall screws 12" on center at end joints and intermediate joints and $1^1/_2$" Type G drywall screws 12 inches on center placed 2" back on either side of face layer end joints. Joints of the face layer are offset 24" from the joints of the base layer.	—	—	—	Varies	—	—	—	$1^1/_4$
23. Wood I-joist (minimum joist depth $9^1/_4$" with a minimum flange depth of $1^5/_{16}$" and a minimum flange cross-sectional area of 2.25 square inches) at 24" o.c. spacing with a minimum 1 × 4 ($^3/_4$" × 3.5" actual) ledger strip applied parallel to and covering the bottom of the bottom flange of each member, tacked in place. 2" mineral wool insulation, 3.5 pcf (nominal) installed adjacent to the bottom flange of the I-joist and supported by the 1 × 4 ledger strip.	23-1.1	$^1/_2$" deep single leg resilient channel 16" on center (channels doubled at wallboard end joints), placed perpendicular to the furring strip and joist and attached to each joist by $1^7/_8$" Type S drywall screws. $^5/_8$" Type C gypsum wallboard applied perpendicular to the channel with end joints staggered not less than 4′ and fastened with $1^1/_8$" Type S drywall screws spaced 7" on center. Wallboard joints to be taped and covered with joint compound.	—	—	—	Varies	—	—	—	$^5/_8$
24. Wood I-joist (minimum I-joist depth $9^1/_4$" with a minimum flange depth of $1^1/_2$" and a minimum flange cross-sectional area of 5.25 square inches; minimum web thickness of $^3/_8$") @ 24" o.c., $1^1/_2$" mineral wool insulation (2.5 pcf-nominal) resting on hat-shaped furring channels.	24-1.1	Minimum 0.026" thick hat-shaped channel 16" o.c. (channels doubled at wallboard end joints), placed perpendicular to the joist and attached to each joist by $1^1/_4$" Type S drywall screws. $^5/_8$" Type C gypsum wallboard applied perpendicular to the channel with end joints staggered and fastened with $1^1/_8$" Type S drywall screws spaced 12" o.c. in the field and 8" o.c. at the wallboard ends. Wallboard joints to be taped and covered with joint compound.	—	—	—	Varies	—	—	—	$^5/_8$
25. Wood I-joist (minimum I-joist depth $9^1/_4$" with a minimum flange depth of $1^1/_2$" and a minimum flange cross-sectional area of 5.25 square inches; minimum web thickness of $^7/_{16}$") @ 24" o.c., $1^1/_2$" mineral wool insulation (2.5 pcf-nominal) resting on resilient channels.	25-1.1	Minimum 0.019" thick resilient channel 16" o.c. (channels doubled at wallboard end joints), placed perpendicular to the joist and attached to each joist by $1^5/_8$" Type S drywall screws. $^5/_8$" Type C gypsum wallboard applied perpendicular to the channel with end joints staggered and fastened with 1" Type S drywall screws spaced 12" o.c. in the field and 8" o.c. at the wallboard ends. Wallboard joints to be taped and covered with joint compound.	—	—	—	Varies	—	—	—	$^5/_8$

(continued)

TABLE 721.1(3)—continued
MINIMUM PROTECTION FOR FLOOR AND ROOF SYSTEMS[a, q]

FLOOR OR ROOF CONSTRUCTION	ITEM NUMBER	CEILING CONSTRUCTION	THICKNESS OF FLOOR OR ROOF SLAB (inches)				MINIMUM THICKNESS OF CEILING (inches)			
			4 hours	3 hours	2 hours	1 hour	4 hours	3 hours	2 hours	1 hour
26. Wood I-joist (minimum I-joist depth $9^1/_4$" with a minimum flange thickness of $1^1/_2$" and a minimum flange cross-sectional area of 2.25 square inches; minimum web thickness of $^3/_8$") @ 24" o.c.	26-1.1	Two layers of $^1/_2$" Type X gypsum wallboard applied with the long dimension perpendicular to the I-joists with end joints staggered. The base layer is fastened with $1^5/_8$" Type S drywall screws spaced 12" o.c. and the face layer is fastened with 2" Type S drywall screws spaced 12" o.c. in the field and 8" o.c. on the edges. Face layer end joints shall not occur on the same I-joist as base layer end joints and edge joints shall be offset 24" from base layer joints. Face layer to also be attached to base layer with $1^1/_2$" Type G drywall screws spaced 8" o.c. placed 6" from face layer end joints. Face layer wallboard joints to be taped and covered with joint compound.	—	—	—	Varies	—	—	—	1
27. Wood I-joist (minimum I-joist depth $9^1/_2$" with a minimum flange depth of $1^5/_{16}$" and a minimum flange cross-sectional area of 1.95 square inches; minimum web thickness of $^3/_8$") @ 24" o.c.	27-1.1	Minimum 0.019" thick resilient channel 16" o.c. (channels doubled at wallboard end joints), placed perpendicular to the joist and attached to each joist by $1^1/_4$" Type S drywall screws. Two layers of $^1/_2$" Type X gypsum wallboard applied with the long dimension perpendicular to the I-joists with end joints staggered. The base layer is fastened with $1^1/_4$" Type S drywall screws spaced 12" o.c. and the face layer is fastened with $1^5/_8$" Type S drywall screws spaced 12" o.c. Face layer end joints shall not occur on the same I-joist as base layer end joints and edge joints shall be offset 24" from base layer joints. Face layer to also be attached to base layer with $1^1/_2$" Type G drywall screws spaced 8" o.c. placed 6" from face layer end joints. Face layer wallboard joints to be taped and covered with joint compound.	—	—	—	Varies	—	—	—	1

(continued)

TABLE 721.1(3)—continued
MINIMUM PROTECTION FOR FLOOR AND ROOF SYSTEMS[p, q]

FLOOR OR ROOF CONSTRUCTION	ITEM NUMBER	CEILING CONSTRUCTION	THICKNESS OF FLOOR OR ROOF SLAB (inches)				MINIMUM THICKNESS OF CEILING (inches)			
			4 hours	3 hours	2 hours	1 hour	4 hours	3 hours	2 hours	1 hour
28. Wood I-joist (minimum I-joist depth $9^1/_4$" with a minimum flange depth of $1^1/_2$" and a minimum flange cross-sectional area of 2.25 square inches; minimum web thickness of $^3/_8$") @ 24" o.c. Unfaced fiberglass insulation or mineral wool insulation is installed between the I-joists supported on the upper surface of the flange by stay wires spaced 12" o.c.	28-1.1	Base layer of $^5/_8$" Type C gypsum wallboard attached directly to I-joists with $1^5/_8$" Type S drywall screws spaced 12" o.c. with ends staggered. Minimum 0.0179" thick hat-shaped $^7/_8$-inch furring channel 16" o.c. (channels doubled at wallboard end joints), placed perpendicular to the joist and attached to each joist by $1^5/_8$" Type S drywall screws after the base layer of gypsum wallboard has been applied. The middle and face layers of $^5/_8$" Type C gypsum wallboard applied perpendicular to the channel with end joints staggered. The middle layer is fastened with 1" Type S drywall screws spaced 12" o.c. The face layer is applied parallel to the middle layer but with the edge joints offset 24" from those of the middle layer and fastened with $1^5/_8$" Type S drywall screws 8" o.c. The joints shall be taped and covered with joint compound.	—	—	—	Varies	—	—	$2^3/_4$	—
29. Channel-shaped 18 gage steel joists (minimum depth 8") spaced a maximum 24" o.c. supporting tongue-and-groove wood structural panels (nominal minimum $^3/_4$" thick) applied perpendicular to framing members. Structural panels attached with $1^5/_8$" Type S-12 screws spaced 12" o.c.	29-1.1	Base layer $^5/_8$" Type X gypsum board applied perpendicular to bottom of framing members with $1^1/_8$" Type S-12 screws spaced 12" o.c. Second layer $^5/_8$" Type X gypsum board attached perpendicular to framing members with $1^5/_8$" Type S-12 screws spaced 12" o.c. Second layer joints offset 24" from base layer. Third layer $^5/_8$" Type X gypsum board attached perpendicular to framing members with $2^3/_8$" Type S-12 screws spaced 12" o.c. Third layer joints offset 12" from second layer joints. Hat-shaped $^7/_8$-inch rigid furring channels applied at right angles to framing members over third layer with two $2^3/_8$" Type S-12 screws at each framing member. Face layer $^5/_8$" Type X gypsum board applied at right angles to furring channels with $1^1/_8$" Type S screws spaced 12" o.c.	—	—	Varies	—	—	—	$3^3/_8$	—

(continued)

TABLE 721.1(3)—continued
MINIMUM PROTECTION FOR FLOOR AND ROOF SYSTEMS[a, q]

FLOOR OR ROOF CONSTRUCTION	ITEM NUMBER	CEILING CONSTRUCTION	THICKNESS OF FLOOR OR ROOF SLAB (inches)				MINIMUM THICKNESS OF CEILING (inches)			
			4 hours	3 hours	2 hours	1 hour	4 hours	3 hours	2 hours	1 hour
30. Wood I-joist (minimum I-joist depth $9^1/_2$" with a minimum flange depth of $1^1/_2$" and a minimum flange cross-sectional area of 2.25 square inches; minimum web thickness of $^3/_8$") @ 24" o.c. Fiberglass insulation placed between I-joists supported by the resilient channels.	30-1.1	Minimum 0.019" thick resilient channel 16" o.c. (channels doubled at wallboard end joints), placed perpendicular to the joists and attached to each joist by $1^1/_4$" Type S drywall screws. Two layers of $^1/_2$" Type X gypsum wallboard applied with the long dimension perpendicular to the I-joists with end joints staggered. The base layer is fastened with $1^1/_4$" Type S drywall screws spaced 12" o.c. and the face layer is fastened with $1^5/_8$" Type S drywall screws spaced 12" o.c. Face layer end joints shall not occur on the same I-joist as base layer end joints and edge joints shall be offset 24" from base layer joints. Face layer to be attached to base layer with $1^1/_2$" Type G drywall screws spaced 8" o.c. placed 6" from face layer end joints. Face layer wallboard joints to be taped and covered with joint compound.	—	—	—	Varies	—	—	—	1

For SI: 1 inch = 25.4 mm, 1 foot = 304.8 mm, 1 pound = 0.454 kg, 1 cubic foot = 0.0283 m^3, 1 pound per square inch = 6.895 kPa, 1 pound per linear foot = 1.4882 kg/m.

a. Staples with equivalent holding power and penetration shall be permitted to be used as alternate fasteners to nails for attachment to wood framing.

b. Where the slab is in an unrestrained condition, minimum reinforcement cover shall be not less than $1^5/_8$ inches for 4 hours (siliceous aggregate only); $1^1/_4$ inches for 4 and 3 hours; 1 inch for 2 hours (siliceous aggregate only); and $^3/_4$ inch for all other restrained and unrestrained conditions.

c. For all of the construction with gypsum wallboard described in this table, gypsum base for veneer plaster of the same size, thickness and core type shall be permitted to be substituted for gypsum wallboard, provided attachment is identical to that specified for the wallboard, and the joints on the face layer are reinforced and the entire surface is covered with not less than $^1/_{16}$-inch gypsum veneer plaster.

d. Slab thickness over steel joists measured at the joists for metal lath form and at the top of the form for steel form units.

e. (a) The maximum allowable stress level for H-Series joists shall not exceed 22,000 psi.
(b) The allowable stress for K-Series joists shall not exceed 26,000 psi, the nominal depth of such joist shall be not less than 10 inches and the nominal joist weight shall be not less than 5 pounds per linear foot.

f. Cement plaster with 15 pounds of hydrated lime and 3 pounds of approved additives or admixtures per bag of cement.

g. Gypsum wallboard ceilings attached to steel framing shall be permitted to be suspended with $1^1/_2$-inch cold-formed carrying channels spaced 48 inches on center, that are suspended with No. 8 SWG galvanized wire hangers spaced 48 inches on center. Cross-furring channels are tied to the carrying channels with No. 18 SWG galvanized wire hangers spaced 48 inches on center. Cross-furring channels are tied to the carrying channels with No. 18 SWG galvanized wire (double strand) and spaced as required for direct attachment to the framing. This alternative is applicable to those steel framing assemblies recognized under Note q.

h. Six-inch hollow clay tile with 2-inch concrete slab above.

i. Four-inch hollow clay tile with $1^1/_2$-inch concrete slab above.

j. Thickness measured to bottom of steel form units.

k. Five-eighths inch of vermiculite gypsum plaster plus $^1/_2$ inch of approved vermiculite acoustical plastic.

l. Furring channels spaced 12 inches on center.

m. Double wood floor shall be permitted to be either of the following:
(a) Subfloor of 1-inch nominal boarding, a layer of asbestos paper weighing not less than 14 pounds per 100 square feet and a layer of 1-inch nominal tongue-and-groove finished flooring; or
(b) Subfloor of 1-inch nominal tongue-and-groove boarding or $^{15}/_{32}$-inch wood structural panels with exterior glue and a layer of 1-inch nominal tongue-and-groove finished flooring or $^{19}/_{32}$-inch wood structural panel finish flooring or a layer of Type I Grade M-1 particleboard not less than $^5/_8$-inch thick.

n. The ceiling shall be permitted to be omitted over unusable space, and flooring shall be permitted to be omitted where unusable space occurs above.

o. For properties of cooler or wallboard nails, see ASTM C 514, ASTM C 547 or ASTM F 1667.

p. Thickness measured on top of steel deck unit.

q. Generic *fire-resistance ratings* (those not designated as PROPRIETARY* in the listing) in the GA 600 shall be accepted as if herein listed.

722.2.1.1.4 Ribbed or undulating surfaces. The equivalent thickness of panels with ribbed or undulating surfaces shall be determined by one of the following expressions:

For $s \geq 4t$, the thickness to be used shall be t

For $s \leq 2t$, the thickness to be used shall be t_e

For $4t > s > 2t$, the thickness to be used shall be

$$t + \left(\frac{4t}{s} - 1\right)(t_e - t) \qquad \textbf{(Equation 7-3)}$$

where:

s = Spacing of ribs or undulations.

t = Minimum thickness.

t_e = Equivalent thickness of the panel calculated as the net cross-sectional area of the panel divided by the width, in which the maximum thickness used in the calculation shall not exceed $2t$.

722.2.1.2 Multiwythe walls. For walls that consist of two wythes of different types of concrete, the *fire-resistance ratings* shall be permitted to be determined from Figure 722.2.1.2.

722.2.1.2.1 Two or more wythes. The *fire-resistance rating* for wall panels consisting of two or more wythes shall be permitted to be determined by the formula:

$$R = (R_1^{0.59} + R_2^{0.59} + ... + R_n^{0.59})^{1.7} \qquad \textbf{(Equation 7-4)}$$

where:

R = The fire endurance of the assembly, minutes.

R_1, R_2, and R_n = The fire endurances of the individual wythes, minutes. Values of $R_n^{0.59}$ for use in Equation 7-4 are given in Table 722.2.1.2(1). Calculated *fire-resistance ratings* are shown in Table 722.2.1.2(2).

722.2.1.2.2 Foam plastic insulation. The *fire-resistance ratings* of precast concrete wall panels consisting of a layer of foam plastic insulation sandwiched between two wythes of concrete shall be permitted to be determined by use of Equation 7-4. Foam plastic insulation with a total thickness of less than 1 inch (25 mm) shall be disregarded. The R_n value for thickness of foam plastic insulation of 1 inch (25 mm) or greater, for use in the calculation, is 5 minutes; therefore $R_n^{0.59} = 2.5$.

722.2.1.3 Joints between precast wall panels. Joints between precast concrete wall panels that are not insulated as required by this section shall be considered as openings in walls. Uninsulated joints shall be included in determining the percentage of openings permitted by Table 705.8. Where openings are not permitted or are required by this code to be protected, the provisions of this section shall be used to determine the amount of joint insulation required. Insulated joints shall not be considered openings for purposes of determining compliance with the allowable percentage of openings in Table 705.8.

722.2.1.3.1 Ceramic fiber joint protection. Figure 722.2.1.3.1 shows thicknesses of *ceramic fiber blankets* to be used to insulate joints between precast concrete wall panels for various panel thicknesses and for joint widths of $^3/_8$ inch (9.5 mm) and 1 inch (25 mm) for *fire-resistance ratings* of 1 hour to 4 hours. For joint widths between $^3/_8$ inch (9.5 mm) and 1 inch (25 mm), the thickness of *ceramic fiber blanket* is allowed to be determined by direct interpolation. Other tested and labeled materials are acceptable in place of *ceramic fiber blankets*.

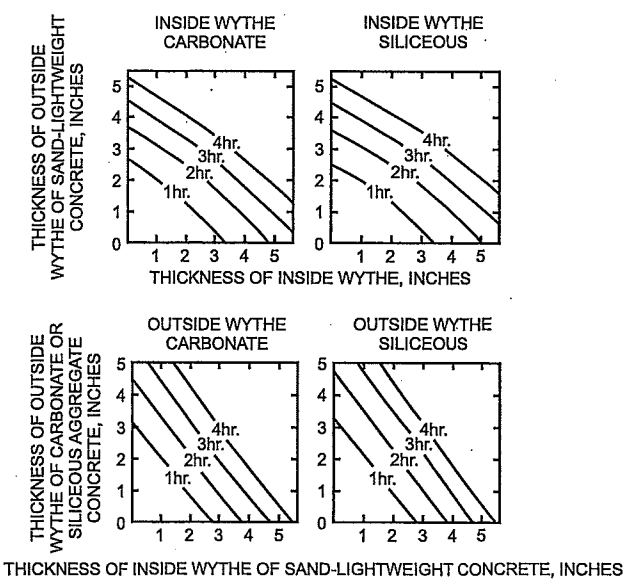

For SI: 1 inch = 25.4 mm.

FIGURE 722.2.1.2
FIRE-RESISTANCE RATINGS OF TWO-WYTHE CONCRETE WALLS

722.2.1.4 Walls with gypsum wallboard or plaster finishes. The *fire-resistance rating* of cast-in-place or precast concrete walls with finishes of gypsum wallboard or plaster applied to one or both sides shall be permitted to be calculated in accordance with the provisions of this section.

722.2.1.4.1 Nonfire-exposed side. Where the finish of gypsum wallboard or plaster is applied to the side of the wall not exposed to fire, the contribution of the finish to the total *fire-resistance rating* shall be determined as follows: The thickness of the finish shall first be corrected by multiplying the actual thickness of the finish by the applicable factor determined from Table 722.2.1.4(1) based on the type of aggregate in the concrete. The corrected thickness of finish shall then be added to the actual or equivalent thickness of concrete and *fire-resistance rating* of the concrete and finish determined from Tables 722.2.1.1 and 722.2.1.2(1) and Figure 722.2.1.2.

722.2.1.4.2 Fire-exposed side. Where gypsum wallboard or plaster is applied to the fire-exposed side of the wall, the contribution of the finish to the total *fire-resistance rating* shall be determined as follows: The time assigned to the finish as established by Table 722.2.1.4(2) shall be added to the *fire-resistance rating* determined from Tables 722.2.1.1 and 722.2.1.2(1) and Figure 722.2.1.2 for the concrete alone, or to the rating determined in Section 722.2.1.4.1 for the concrete and finish on the nonfire-exposed side.

722.2.1.4.3 Nonsymmetrical assemblies. For a wall having no finish on one side or different types or thicknesses of finish on each side, the calculation procedures of Sections 722.2.1.4.1 and 722.2.1.4.2 shall be performed twice, assuming either side of the wall to be the fire-exposed side. The *fire-resistance rating* of the wall shall not exceed the lower of the two values.

Exception: For an *exterior wall* with a *fire separation distance* greater than 5 feet (1524 mm) the fire shall be assumed to occur on the interior side only.

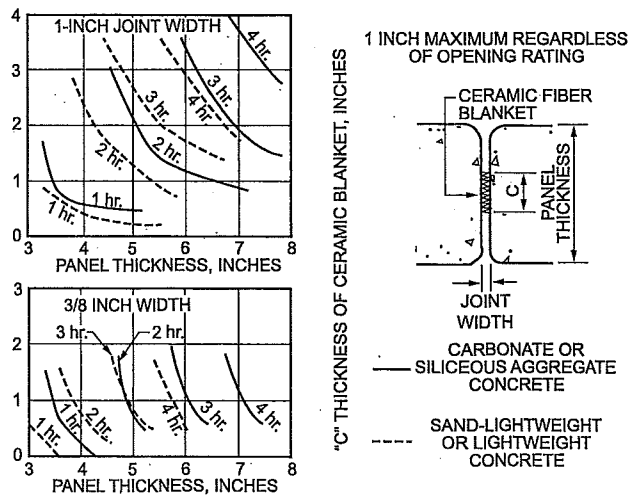

For SI: 1 inch = 25.4 mm.

FIGURE 722.2.1.3.1
CERAMIC FIBER JOINT PROTECTION

TABLE 722.2.1.2(1)
VALUES OF $R_n^{0.59}$ FOR USE IN EQUATION 7-4

TYPE OF MATERIAL	THICKNESS OF MATERIAL (inches)											
	1½	2	2½	3	3½	4	4½	5	5½	6	6½	7
Siliceous aggregate concrete	5.3	6.5	8.1	9.5	11.3	13.0	14.9	16.9	18.8	20.7	22.8	25.1
Carbonate aggregate concrete	5.5	7.1	8.9	10.4	12.0	14.0	16.2	18.1	20.3	21.9	24.7	27.2[c]
Sand-lightweight concrete	6.5	8.2	10.5	12.8	15.5	18.1	20.7	23.3	26.0[c]	Note c	Note c	Note c
Lightweight concrete	6.6	8.8	11.2	13.7	16.5	19.1	21.9	24.7	27.8[c]	Note c	Note c	Note c
Insulating concrete[a]	9.3	13.3	16.6	18.3	23.1	26.5[c]	Note c	Note c	Note c	Note c	Note c	Note c
Airspace[b]	—	—	—	—	—	—	—	—	—	—	—	—

For SI: 1 inch = 25.4 mm, 1 pound per cubic foot = 16.02 kg/m³.

a. Dry unit weight of 35 pcf or less and consisting of cellular, perlite or vermiculite concrete.

b. The $R_n^{0.59}$ value for one ½" to 3½" airspace is 3.3. The $R_n^{0.59}$ value for two ½" to 3½" airspaces is 6.7.

c. The *fire-resistance rating* for this thickness exceeds 4 hours.

TABLE 722.2.1.2(2)
FIRE-RESISTANCE RATINGS BASED ON $R^{0.59}$

R^a, MINUTES	$R^{0.59}$
60	11.20
120	16.85
180	21.41
240	25.37

a. Based on Equation 7-4.

722.2.1.4.4 Minimum concrete fire-resistance rating. Where finishes applied to one or both sides of a concrete wall contribute to the *fire-resistance rating*, the concrete alone shall provide not less than one-half of the total required *fire-resistance rating*. Additionally, the contribution to the *fire resistance* of the finish on the nonfire-exposed side of a *load-bearing wall* shall not exceed one-half the contribution of the concrete alone.

722.2.1.4.5 Concrete finishes. Finishes on concrete walls that are assumed to contribute to the total *fire-resistance rating* of the wall shall comply with the installation requirements of Section 722.3.2.5.

TABLE 722.2.1.4(1)
MULTIPLYING FACTOR FOR FINISHES ON NONFIRE-EXPOSED SIDE OF WALL

TYPE OF FINISH APPLIED TO CONCRETE OR CONCRETE MASONRY WALL	TYPE OF AGGREGATE USED IN CONCRETE OR CONCRETE MASONRY			
	Concrete: siliceous or carbonate Concrete Masonry: siliceous or carbonate; solid clay brick	Concrete: sand-lightweight Concrete Masonry: clay tile; hollow clay brick; concrete masonry units of expanded shale and < 20% sand	Concrete: lightweight Concrete Masonry: concrete masonry units of expanded shale, expanded clay, expanded slag, or pumice < 20% sand	Concrete Masonry: concrete masonry units of expanded slag, expanded clay, or pumice
Portland cement-sand plaster	1.00	0.75[a]	0.75[a]	0.50[a]
Gypsum-sand plaster	1.25	1.00	1.00	1.00
Gypsum-vermiculite or perlite plaster	1.75	1.50	1.25	1.25
Gypsum wallboard	3.00	2.25	2.25	2.25

For SI: 1 inch = 25.4 mm.

a. For Portland cement-sand plaster $^5/_8$ inch or less in thickness and applied directly to the concrete or concrete masonry on the nonfire-exposed side of the wall, the multiplying factor shall be 1.00.

TABLE 722.2.1.4(2)
TIME ASSIGNED TO FINISH MATERIALS ON FIRE-EXPOSED SIDE OF WALL

FINISH DESCRIPTION	TIME (minutes)
Gypsum wallboard	
$^3/_8$ inch	10
$^1/_2$ inch	15
$^5/_8$ inch	20
2 layers of $^3/_8$ inch	25
1 layer of $^3/_8$ inch, 1 layer of $^1/_2$ inch	35
2 layers of $^1/_2$ inch	40
Type X gypsum wallboard	
$^1/_2$ inch	25
$^5/_8$ inch	40
Portland cement-sand plaster applied directly to concrete masonry	See Note a
Portland cement-sand plaster on metal lath	
$^3/_4$ inch	20
$^7/_8$ inch	25
1 inch	30
Gypsum sand plaster on $^3/_8$-inch gypsum lath	
$^1/_2$ inch	35
$^5/_8$ inch	40
$^3/_4$ inch	50
Gypsum sand plaster on metal lath	
$^3/_4$ inch	50
$^7/_8$ inch	60
1 inch	80

For SI: 1 inch = 25.4 mm.

a. The actual thickness of Portland cement-sand plaster, provided it is $^5/_8$ inch or less in thickness, shall be permitted to be included in determining the equivalent thickness of the masonry for use in Table 722.3.2.

722.2.2 Concrete floor and roof slabs. Reinforced and prestressed floors and roofs shall comply with Section 722.2.2.1. Multicourse floors and roofs shall comply with Sections 722.2.2.2 and 722.2.2.3, respectively.

722.2.2.1 Reinforced and prestressed floors and roofs. The minimum thicknesses of reinforced and prestressed concrete floor or roof slabs for *fire-resistance ratings* of 1 hour to 4 hours are shown in Table 722.2.2.1.

Exception: Minimum thickness shall not be required for floors and ramps within open and enclosed parking garages constructed in accordance with Sections 406.5 and 406.6, respectively.

TABLE 722.2.2.1
MINIMUM SLAB THICKNESS (inches)

CONCRETE TYPE	FIRE-RESISTANCE RATING (hours)				
	1	1½	2	3	4
Siliceous	3.5	4.3	5	6.2	7
Carbonate	3.2	4	4.6	5.7	6.6
Sand-lightweight	2.7	3.3	3.8	4.6	5.4
Lightweight	2.5	3.1	3.6	4.4	5.1

For SI: 1 inch = 25.4 mm.

722.2.2.1.1 Hollow-core prestressed slabs. For hollow-core prestressed concrete slabs in which the cores are of constant cross section throughout the length, the equivalent thickness shall be permitted to be obtained by dividing the net cross-sectional area of the slab including grout in the joints, by its width.

722.2.2.1.2 Slabs with sloping soffits. The thickness of slabs with sloping soffits (see Figure 722.2.2.1.2) shall be determined at a distance $2t$ or 6 inches (152 mm), whichever is less, from the point of minimum thickness, where t is the minimum thickness.

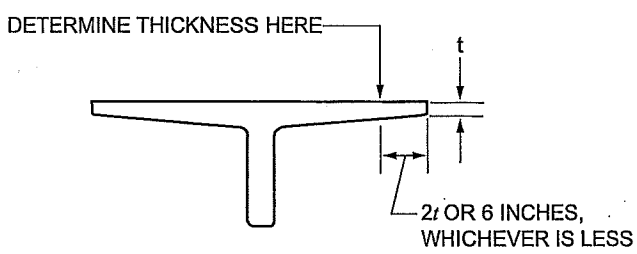

For SI: 1 inch = 25.4 mm.

FIGURE 722.2.2.1.2
DETERMINATION OF SLAB THICKNESS FOR SLOPING SOFFITS

722.2.2.1.3 Slabs with ribbed soffits. The thickness of slabs with ribbed or undulating soffits (see Figure 722.2.2.1.3) shall be determined by one of the following expressions, whichever is applicable:

For $s > 4t$, the thickness to be used shall be t

For $s \leq 2t$, the thickness to be used shall be t_e

For $4t > s > 2t$, the thickness to be used shall be

$$t + \left(\frac{4t}{s} - 1\right)(t_e - t) \qquad \textbf{(Equation 7-5)}$$

where:

s = Spacing of ribs or undulations.

t = Minimum thickness.

t_e = Equivalent thickness of the slab calculated as the net area of the slab divided by the width, in which the maximum thickness used in the calculation shall not exceed $2t$.

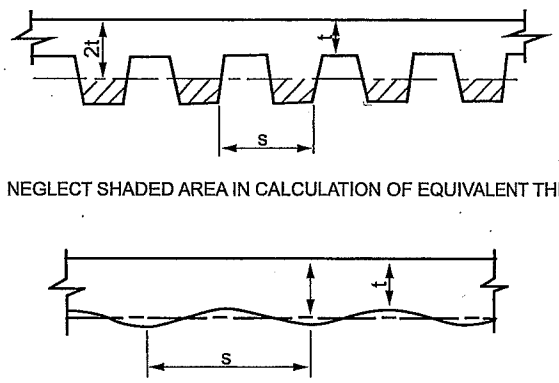

For SI: 1 inch = 25.4 mm.

FIGURE 722.2.2.1.3
SLABS WITH RIBBED OR UNDULATING SOFFITS

722.2.2.2 Multicourse floors. The *fire-resistance ratings* of floors that consist of a base slab of concrete with a topping (overlay) of a different type of concrete shall comply with Figure 722.2.2.2.

722.2.2.3 Multicourse roofs. The *fire-resistance ratings* of roofs that consist of a base slab of concrete with a topping (overlay) of an insulating concrete or with an insulating board and built-up roofing shall comply with Figures 722.2.2.3(1) and 722.2.2.3(2).

722.2.2.3.1 Heat transfer. For the transfer of heat, three-ply built-up roofing contributes 10 minutes to the *fire-resistance rating*. The *fire-resistance rating* for concrete assemblies such as those shown in Figure 722.2.2.3(1) shall be increased by 10 minutes. This increase is not applicable to those shown in Figure 722.2.2.3(2).

722.2.2.4 Joints in precast slabs. Joints between adjacent precast concrete slabs need not be considered in calculating the slab thickness provided that a concrete topping not less than 1 inch (25 mm) thick is used. Where no concrete topping is used, joints must be grouted to a depth of not less than one-third the slab thickness at the joint, but not less than 1 inch (25 mm), or the joints must be made fire resistant by other *approved* methods.

722.2.3 Concrete cover over reinforcement. The minimum thickness of concrete cover over reinforcement in

concrete slabs, reinforced beams and prestressed beams shall comply with this section.

722.2.3.1 Slab cover. The minimum thickness of concrete cover to the positive moment reinforcement shall comply with Table 722.2.3(1) for reinforced concrete and Table 722.2.3(2) for prestressed concrete. These tables are applicable for solid or hollow-core one-way or two-way slabs with flat undersurfaces. These tables are applicable to slabs that are either cast in place or precast. For precast prestressed concrete not covered elsewhere, the procedures contained in PCI MNL 124 shall be acceptable.

722.2.3.2 Reinforced beam cover. The minimum thickness of concrete cover to the positive moment reinforcement (bottom steel) for reinforced concrete beams is shown in Table 722.2.3(3) for *fire-resistance ratings* of 1 hour to 4 hours.

722.2.3.3 Prestressed beam cover. The minimum thickness of concrete cover to the positive moment prestressing tendons (bottom steel) for restrained and unrestrained prestressed concrete beams and stemmed units shall comply with the values shown in Tables 722.2.3(4) and 722.2.3(5) for *fire-resistance ratings* of 1 hour to 4 hours. Values in Table 722.2.3(4) apply to beams 8 inches (203 mm) or greater in width. Values in Table 722.2.3(5) apply to beams or stems of any width, provided the cross-section area is not less than 40 square inches (25 806 mm^2). In case of differences between the values determined from Table 722.2.3(4) or 722.2.3(5), it is permitted to use the smaller value. The concrete cover shall be calculated in accordance with Section 722.2.3.3.1. The minimum concrete cover for nonprestressed reinforcement in prestressed concrete beams shall comply with Section 722.2.3.2.

722.2.3.3.1 Calculating concrete cover. The concrete cover for an individual tendon is the minimum thickness of concrete between the surface of the tendon and the fire-exposed surface of the beam, except that for ungrouted ducts, the assumed cover thickness is the minimum thickness of concrete between the surface of the duct and the fire-exposed surface of the beam. For beams in which two or more tendons are used, the cover is assumed to be the average of the minimum cover of the individual tendons. For corner tendons (tendons equal distance from the bottom and side), the minimum cover used in the calculation shall be one-half the actual value. For stemmed members with two or more prestressing tendons located along the vertical centerline of the stem, the average cover shall be the distance from the bottom of the member to the centroid of the tendons. The actual cover for any individual tendon shall be not less than one-half the smaller value shown in Tables 722.2.3(4) and 722.2.3(5), or 1 inch (25 mm), whichever is greater.

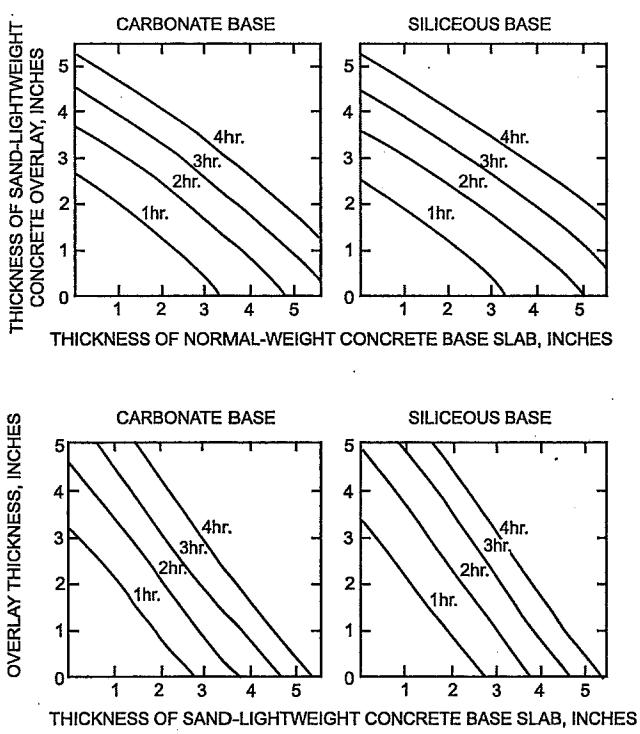

For SI: 1 inch = 25.4 mm.

FIGURE 722.2.2.2
FIRE-RESISTANCE RATINGS FOR TWO-COURSE CONCRETE FLOORS

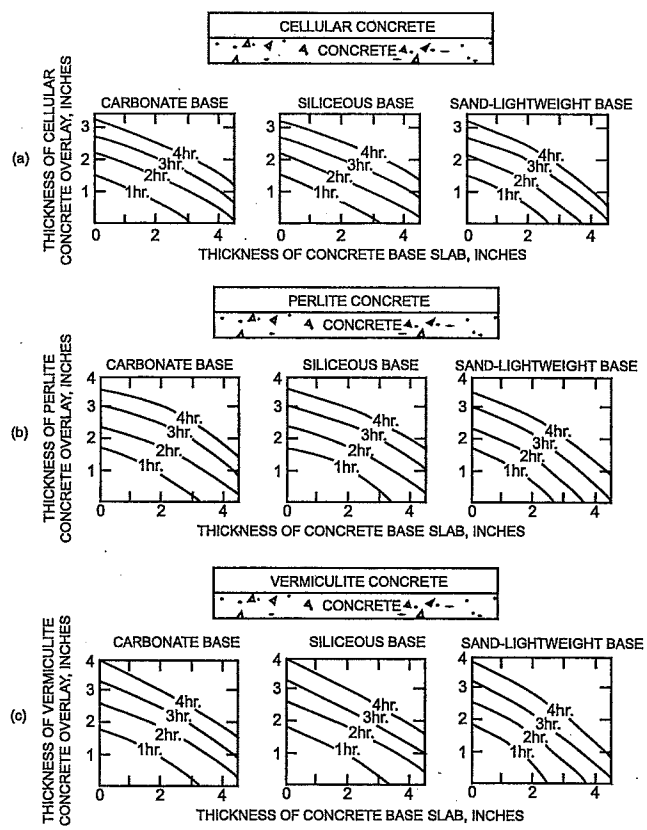

For SI: 1 inch = 25.4 mm.

FIGURE 722.2.2.3(1)
FIRE-RESISTANCE RATINGS FOR CONCRETE ROOF ASSEMBLIES

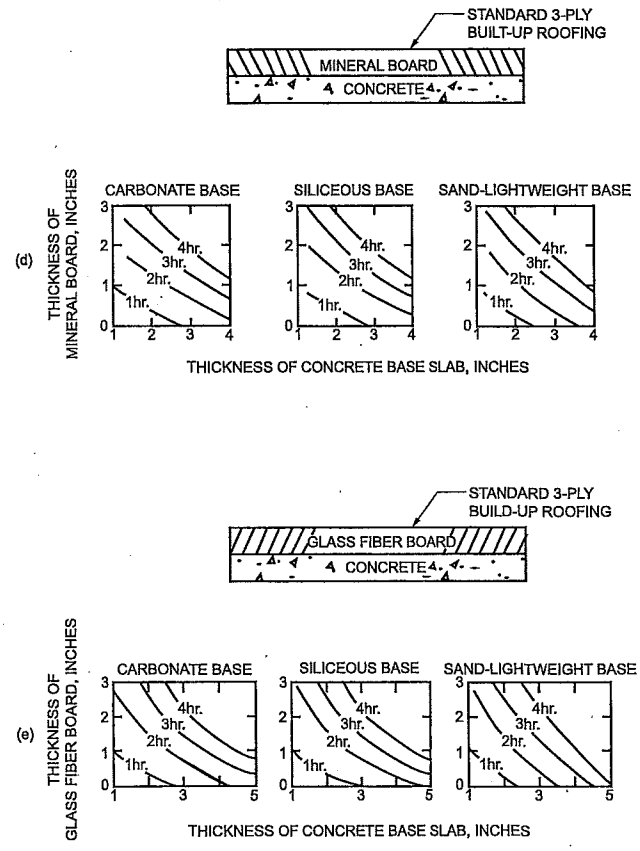

For SI: 1 inch = 25.4 mm.

FIGURE 722.2.2.3(2)
FIRE-RESISTANCE RATINGS FOR CONCRETE ROOF ASSEMBLIES

722.2.4 Concrete columns. Concrete columns shall comply with this section.

722.2.4.1 Minimum size. The minimum overall dimensions of reinforced concrete columns for *fire-resistance ratings* of 1 hour to 4 hours for exposure to fire on all sides shall comply with this section.

722.2.4.1.1 Concrete strength less than or equal to 12,000 psi. For columns made with concrete having a specified compressive strength, f'_c, of less than or equal to 12,000 psi (82.7 MPa), the minimum dimension shall comply with Table 722.2.4.

TABLE 722.2.4
MINIMUM DIMENSION OF CONCRETE COLUMNS (inches)

TYPES OF CONCRETE	FIRE-RESISTANCE RATING (hours)				
	1	$1^1/_2$	2[a]	3[a]	4[b]
Siliceous	8	9	10	12	14
Carbonate	8	9	10	11	12
Sand-lightweight	8	$8^1/_2$	9	$10^1/_2$	12

For SI: 1 inch = 25 mm.

a. The minimum dimension is permitted to be reduced to 8 inches for rectangular columns with two parallel sides not less than 36 inches in length.

b. The minimum dimension is permitted to be reduced to 10 inches for rectangular columns with two parallel sides not less than 36 inches in length.

722.2.4.1.2 Concrete strength greater than 12,000 psi. For columns made with concrete having a specified compressive strength, f'_c, greater than 12,000 psi (82.7 MPa), for *fire-resistance ratings* of 1 hour to 4 hours the minimum dimension shall be 24 inches (610 mm).

722.2.4.2 Minimum cover for R/C columns. The minimum thickness of concrete cover to the main longitudinal reinforcement in columns, regardless of the type of aggregate used in the concrete and the specified compressive strength of concrete, f'_c, shall be not less than 1 inch (25 mm) times the number of hours of required *fire resistance* or 2 inches (51 mm), whichever is less.

TABLE 722.2.3(1)
COVER THICKNESS FOR REINFORCED CONCRETE FLOOR OR ROOF SLABS (inches)

CONCRETE AGGREGATE TYPE	FIRE-RESISTANCE RATING (hours)									
	Restrained					Unrestrained				
	1	$1^1/_2$	2	3	4	1	$1^1/_2$	2	3	4
Siliceous	$^3/_4$	$^3/_4$	$^3/_4$	$^3/_4$	$^3/_4$	$^3/_4$	$^3/_4$	1	$1^1/_4$	$1^5/_8$
Carbonate	$^3/_4$	$^3/_4$	$^3/_4$	$^3/_4$	$^3/_4$	$^3/_4$	$^3/_4$	$^3/_4$	$1^1/_4$	$1^1/_4$
Sand-lightweight or lightweight	$^3/_4$	$^3/_4$	$^3/_4$	$^3/_4$	$^3/_4$	$^3/_4$	$^3/_4$	$^3/_4$	$1^1/_4$	$1^1/_4$

For SI: 1 inch = 25.4 mm.

TABLE 722.2.3(2)
COVER THICKNESS FOR PRESTRESSED CONCRETE FLOOR OR ROOF SLABS (inches)

CONCRETE AGGREGATE TYPE	FIRE-RESISTANCE RATING (hours)									
	Restrained					Unrestrained				
	1	$1^1/_2$	2	3	4	1	$1^1/_2$	2	3	4
Siliceous	$^3/_4$	$^3/_4$	$^3/_4$	$^3/_4$	$^3/_4$	$1^1/_8$	$1^1/_2$	$1^3/_4$	$2^3/_8$	$2^3/_4$
Carbonate	$^3/_4$	$^3/_4$	$^3/_4$	$^3/_4$	$^3/_4$	1	$1^3/_8$	$1^5/_8$	$2^1/_8$	$2^1/_4$
Sand-lightweight or lightweight	$^3/_4$	$^3/_4$	$^3/_4$	$^3/_4$	$^3/_4$	1	$1^3/_8$	$1^1/_2$	2	$2^1/_4$

For SI: 1 inch = 25.4 mm.

TABLE 722.2.3(3)
MINIMUM COVER FOR MAIN REINFORCING BARS OF REINFORCED CONCRETE BEAMS[c]
(APPLICABLE TO ALL TYPES OF STRUCTURAL CONCRETE)

RESTRAINED OR UNRESTRAINED[a]	BEAM WIDTH[b] (inches)	FIRE-RESISTANCE RATING (hours)				
		1	1 1/2	2	3	4
Restrained	5	3/4	3/4	3/4	1[a]	1 1/4[a]
	7	3/4	3/4	3/4	3/4	3/4
	≥ 10	3/4	3/4	3/4	3/4	3/4
Unrestrained	5	3/4	1	1 1/4	—	—
	7	3/4	3/4	3/4	1 3/4	3
	≥ 10	3/4	3/4	3/4	1	1 3/4

For SI: 1 inch = 25.4 mm, 1 foot = 304.8 mm.

a. Tabulated values for restrained assemblies apply to beams spaced more than 4 feet on center. For restrained beams spaced 4 feet or less on center, minimum cover of 3/4 inch is adequate for ratings of 4 hours or less.

b. For beam widths between the tabulated values, the minimum cover thickness can be determined by direct interpolation.

c. The cover for an individual reinforcing bar is the minimum thickness of concrete between the surface of the bar and the fire-exposed surface of the beam. For beams in which several bars are used, the cover for corner bars used in the calculation shall be reduced to one-half of the actual value. The cover for an individual bar must be not less than one-half of the value given in Table 722.2.3(3) nor less than 3/4 inch.

TABLE 722.2.3(4)
MINIMUM COVER FOR PRESTRESSED CONCRETE BEAMS 8 INCHES OR GREATER IN WIDTH[b]

RESTRAINED OR UNRESTRAINED[a]	CONCRETE AGGREGATE TYPE	BEAM WIDTH (inches)	FIRE-RESISTANCE RATING (hours)				
			1	1 1/2	2	3	4
Restrained	Carbonate or siliceous	8	1 1/2	1 1/2	1 1/2	1 3/4[a]	2 1/2[a]
	Carbonate or siliceous	≥ 12	1 1/2	1 1/2	1 1/2	1 1/2	1 7/8[a]
	Sand lightweight	8	1 1/2	1 1/2	1 1/2	1 1/2	2[a]
	Sand lightweight	≥ 12	1 1/2	1 1/2	1 1/2	1 1/2	1 5/8[a]
Unrestrained	Carbonate or siliceous	8	1 1/2	1 3/4	2 1/2	5[c]	—
	Carbonate or siliceous	≥ 12	1 1/2	1 1/2	1 7/8[a]	2 1/2	3
	Sand lightweight	8	1 1/2	1 1/2	2	3 1/4	—
	Sand lightweight	≥ 12	1 1/2	1 1/2	1 5/8	2	2 1/2

For SI: 1 inch = 25.4 mm, 1 foot = 304.8 mm.

a. Tabulated values for restrained assemblies apply to beams spaced more than 4 feet on center. For restrained beams spaced 4 feet or less on center, minimum cover of 3/4 inch is adequate for 4-hour ratings or less.

b. For beam widths between 8 inches and 12 inches, minimum cover thickness can be determined by direct interpolation.

c. Not practical for 8-inch-wide beam but shown for purposes of interpolation.

TABLE 722.2.3(5)
MINIMUM COVER FOR PRESTRESSED CONCRETE BEAMS OF ALL WIDTHS

RESTRAINED OR UNRESTRAINED[a]	CONCRETE AGGREGATE TYPE	BEAM AREA[b] A (square inches)	FIRE-RESISTANCE RATING (hours)				
			1	1 1/2	2	3	4
Restrained	All	40 ≤ A ≤ 150	1 1/2	1 1/2	2	2 1/2	—
	Carbonate or siliceous	150 < A ≤ 300	1 1/2	1 1/2	1 1/2	1 3/4	2 1/2
		300 < A	1 1/2	1 1/2	1 1/2	1 1/2	2
	Sand lightweight	150 < A	1 1/2	1 1/2	1 1/2	1 1/2	2
Unrestrained	All	40 ≤ A ≤ 150	2	2 1/2	—	—	—
	Carbonate or siliceous	150 < A ≤ 300	1 1/2	1 3/4	2 1/2	—	—
		300 < A	1 1/2	1 1/2	2	3[c]	4[c]
	Sand lightweight	150 < A	1 1/2	1 1/2	2	3[c]	4[c]

For SI: 1 inch = 25.4 mm, 1 foot = 304.8 mm.

a. Tabulated values for restrained assemblies apply to beams spaced more than 4 feet on center. For restrained beams spaced 4 feet or less on center, minimum cover of 3/4 inch is adequate for 4-hour ratings or less.

b. The cross-sectional area of a stem is permitted to include a portion of the area in the flange, provided the width of the flange used in the calculation does not exceed three times the average width of the stem.

c. U-shaped or hooped stirrups spaced not to exceed the depth of the member and having a minimum cover of 1 inch shall be provided.

722.2.4.3 Tie and spiral reinforcement. For concrete columns made with concrete having a specified compressive strength, f'_c, greater than 12,000 psi (82.7 MPa), tie and spiral reinforcement shall comply with the following:

1. The free ends of rectangular ties shall terminate with a 135-degree (2.4 rad) standard tie hook.
2. The free ends of circular ties shall terminate with a 90-degree (1.6 rad) standard tie hook.
3. The free ends of spirals, including at lap splices, shall terminate with a 90-degree (1.6 rad) standard tie hook.

The hook extension at the free end of ties and spirals shall be the larger of six bar diameters and the extension required by Section 7.1.3 of ACI 318. Hooks shall project into the core of the column.

722.2.4.4 Columns built into walls. The minimum dimensions of Table 722.2.4 do not apply to a reinforced concrete column that is built into a concrete or masonry wall provided all of the following are met:

1. The *fire-resistance rating* for the wall is equal to or greater than the required rating of the column;
2. The main longitudinal reinforcing in the column has cover not less than that required by Section 722.2.4.2; and
3. Openings in the wall are protected in accordance with Table 716.5.

Where openings in the wall are not protected as required by Section 716.5, the minimum dimension of columns required to have a *fire-resistance rating* of 3 hours or less shall be 8 inches (203 mm), and 10 inches (254 mm) for columns required to have a *fire-resistance rating* of 4 hours, regardless of the type of aggregate used in the concrete.

722.2.4.5 Precast cover units for steel columns. See Section 722.5.1.4.

722.3 Concrete masonry. The provisions of this section contain procedures by which the *fire-resistance ratings* of concrete masonry are established by calculations.

722.3.1 Equivalent thickness. The equivalent thickness of concrete masonry construction shall be determined in accordance with the provisions of this section.

722.3.1.1 Concrete masonry unit plus finishes. The equivalent thickness of concrete masonry assemblies, T_{ea}, shall be computed as the sum of the equivalent thickness of the concrete masonry unit, T_e, as determined by Section 722.3.1.2, 722.3.1.3 or 722.3.1.4, plus the equivalent thickness of finishes, T_{ef}, determined in accordance with Section 722.3.2:

$$T_{ea} = T_e + T_{ef} \qquad \textbf{(Equation 7-6)}$$

722.3.1.2 Ungrouted or partially grouted construction. T_e shall be the value obtained for the concrete masonry unit determined in accordance with ASTM C 140.

722.3.1.3 Solid grouted construction. The equivalent thickness, T_e, of solid grouted concrete masonry units is the actual thickness of the unit.

722.3.1.4 Airspaces and cells filled with loose-fill material. The equivalent thickness of completely filled hollow concrete masonry is the actual thickness of the unit where loose-fill materials are: sand, pea gravel, crushed stone, or slag that meet ASTM C 33 requirements; pumice, scoria, expanded shale, expanded clay, expanded slate, expanded slag, expanded fly ash, or cinders that comply with ASTM C 331; or perlite or vermiculite meeting the requirements of ASTM C 549 and ASTM C 516, respectively.

722.3.2 Concrete masonry walls. The *fire-resistance rating* of walls and partitions constructed of concrete masonry units shall be determined from Table 722.3.2. The rating shall be based on the equivalent thickness of the masonry and type of aggregate used.

722.3.2.1 Finish on nonfire-exposed side. Where plaster or gypsum wallboard is applied to the side of the wall not exposed to fire, the contribution of the finish to the total *fire-resistance rating* shall be determined as follows: The thickness of gypsum wallboard or plaster shall be corrected by multiplying the actual thickness of the finish by applicable factor determined from Table

TABLE 722.3.2
MINIMUM EQUIVALENT THICKNESS (inches) OF BEARING OR NONBEARING CONCRETE MASONRY WALLS[a,b,c,d]

TYPE OF AGGREGATE	FIRE-RESISTANCE RATING (hours)														
	1/2	3/4	1	1 1/4	1 1/2	1 3/4	2	2 1/4	2 1/2	2 3/4	3	3 1/4	3 1/2	3 3/4	4
Pumice or expanded slag	1.5	1.9	2.1	2.5	2.7	3.0	3.2	3.4	3.6	3.8	4.0	4.2	4.4	4.5	4.7
Expanded shale, clay or slate	1.8	2.2	2.6	2.9	3.3	3.4	3.6	3.8	4.0	4.2	4.4	4.6	4.8	4.9	5.1
Limestone, cinders or unexpanded slag	1.9	2.3	2.7	3.1	3.4	3.7	4.0	4.3	4.5	4.8	5.0	5.2	5.5	5.7	5.9
Calcareous or siliceous gravel	2.0	2.4	2.8	3.2	3.6	3.9	4.2	4.5	4.8	5.0	5.3	5.5	5.8	6.0	6.2

For SI: 1 inch = 25.4 mm.

a. Values between those shown in the table can be determined by direct interpolation.

b. Where combustible members are framed into the wall, the thickness of solid material between the end of each member and the opposite face of the wall, or between members set in from opposite sides, shall be not less than 93 percent of the thickness shown in the table.

c. Requirements of ASTM C 55, ASTM C 73, ASTM C 90 or ASTM C 744 shall apply.

d. Minimum required equivalent thickness corresponding to the hourly *fire-resistance rating* for units with a combination of aggregate shall be determined by linear interpolation based on the percent by volume of each aggregate used in manufacture.

722.2.1.4(1). This corrected thickness of finish shall be added to the equivalent thickness of masonry and the *fire-resistance rating* of the masonry and finish determined from Table 722.3.2.

722.3.2.2 Finish on fire-exposed side. Where plaster or gypsum wallboard is applied to the fire-exposed side of the wall, the contribution of the finish to the total *fire-resistance rating* shall be determined as follows: The time assigned to the finish as established by Table 722.2.1.4(2) shall be added to the *fire-resistance rating* determined in Section 722.3.2 for the masonry alone, or in Section 722.3.2.1 for the masonry and finish on the nonfire-exposed side.

722.3.2.3 Nonsymmetrical assemblies. For a wall having no finish on one side or having different types or thicknesses of finish on each side, the calculation procedures of this section shall be performed twice, assuming either side of the wall to be the fire-exposed side. The *fire-resistance rating* of the wall shall not exceed the lower of the two values calculated.

Exception: For *exterior walls* with a *fire separation distance* greater than 5 feet (1524 mm), the fire shall be assumed to occur on the interior side only.

722.3.2.4 Minimum concrete masonry fire-resistance rating. Where the finish applied to a concrete masonry wall contributes to its *fire-resistance rating*, the masonry alone shall provide not less than one-half the total required *fire-resistance rating*.

722.3.2.5 Attachment of finishes. Installation of finishes shall be as follows:

1. Gypsum wallboard and gypsum lath applied to concrete masonry or concrete walls shall be secured to wood or steel furring members spaced not more than 16 inches (406 mm) on center (o.c.).
2. Gypsum wallboard shall be installed with the long dimension parallel to the furring members and shall have all joints finished.
3. Other aspects of the installation of finishes shall comply with the applicable provisions of Chapters 7 and 25.

722.3.3 Multiwythe masonry walls. The *fire-resistance rating* of wall assemblies constructed of multiple wythes of masonry materials shall be permitted to be based on the *fire-resistance rating* period of each wythe and the continuous airspace between each wythe in accordance with the following formula:

$$R_A = (R_1^{0.59} + R_2^{0.59} + \ldots + R_n^{0.59} + A_1 + A_2 + \ldots + A_n)^{1.7} \quad \textbf{(Equation 7-7)}$$

where:

R_A = *Fire-resistance rating* of the assembly (hours).

$R_1, R_2, \ldots, R_n$ = *Fire-resistance rating* of wythes for 1, 2, *n* (hours), respectively.

$A_1, A_2, \ldots, A_n$ = 0.30, factor for each continuous airspace for 1, 2, ...*n*, respectively, having a depth of $^1/_2$ inch (12.7 mm) or more between wythes.

722.3.4 Concrete masonry lintels. *Fire-resistance ratings* for concrete masonry lintels shall be determined based upon the nominal thickness of the lintel and the minimum thickness of concrete masonry or concrete, or any combination thereof, covering the main reinforcing bars, as determined in accordance with Table 722.3.4, or by *approved* alternate methods.

TABLE 722.3.4
MINIMUM COVER OF LONGITUDINAL REINFORCEMENT IN FIRE-RESISTANCE-RATED REINFORCED CONCRETE MASONRY LINTELS (inches)

NOMINAL WIDTH OF LINTEL (inches)	FIRE-RESISTANCE RATING (hours)			
	1	2	3	4
6	$1^1/_2$	2	—	—
8	$1^1/_2$	$1^1/_2$	$1^3/_4$	3
10 or greater	$1^1/_2$	$1^1/_2$	$1^1/_2$	$1^3/_4$

For SI: 1 inch = 25.4 mm.

722.3.5 Concrete masonry columns. The *fire-resistance rating* of concrete masonry columns shall be determined based upon the least plan dimension of the column in accordance with Table 722.3.5 or by *approved* alternate methods.

TABLE 722.3.5
MINIMUM DIMENSION OF CONCRETE MASONRY COLUMNS (inches)

FIRE-RESISTANCE RATING (hours)			
1	2	3	4
8 inches	10 inches	12 inches	14 inches

For SI:1 inch = 25.4 mm.

722.4 Clay brick and tile masonry. The provisions of this section contain procedures by which the *fire-resistance ratings* of clay brick and tile masonry are established by calculations.

722.4.1 Masonry walls. The *fire-resistance rating* of masonry walls shall be based upon the equivalent thickness as calculated in accordance with this section. The calculation shall take into account finishes applied to the wall and airspaces between wythes in multiwythe construction.

722.4.1.1 Equivalent thickness. The *fire-resistance ratings* of walls or partitions constructed of solid or hollow clay masonry units shall be determined from Table 722.4.1(1) or 722.4.1(2). The equivalent thickness of the clay masonry unit shall be determined by Equation 7-8 where using Table 722.4.1(1). The *fire-resistance rating* determined from Table 722.4.1(1) shall be permitted to be used in the calculated *fire-resistance rating* procedure in Section 722.4.2.

$$T_e = V_n/LH \quad \textbf{(Equation 7-8)}$$

where:

T_e = The equivalent thickness of the clay masonry unit (inches).

V_n = The net volume of the clay masonry unit (inch^3).

L = The specified length of the clay masonry unit (inches).

H = The specified height of the clay masonry unit (inches).

722.4.1.1.1 Hollow clay units. The equivalent thickness, T_e, shall be the value obtained for hollow clay units as determined in accordance with Equation 7-8. The net volume, V_n, of the units shall be determined using the gross volume and percentage of void area determined in accordance with ASTM C 67.

722.4.1.1.2 Solid grouted clay units. The equivalent thickness of solid grouted clay masonry units shall be taken as the actual thickness of the units.

722.4.1.1.3 Units with filled cores. The equivalent thickness of the hollow clay masonry units is the actual thickness of the unit where completely filled with loose-fill materials of: sand, pea gravel, crushed stone, or slag that meet ASTM C 33 requirements; pumice, scoria, expanded shale, expanded clay, expanded slate, expanded slag, expanded fly ash, or cinders in compliance with ASTM C 331; or perlite or vermiculite meeting the requirements of ASTM C 549 and ASTM C 516, respectively.

722.4.1.2 Plaster finishes. Where plaster is applied to the wall, the total *fire-resistance rating* shall be determined by the formula:

$$R = (R_n^{0.59} + pl)^{1.7} \qquad \textbf{(Equation 7-9)}$$

where:

R = The *fire-resistance rating* of the assembly (hours).

R_n = The *fire-resistance rating* of the individual wall (hours).

TABLE 722.4.1(1)
FIRE-RESISTANCE PERIODS OF CLAY MASONRY WALLS

MATERIAL TYPE	MINIMUM REQUIRED EQUIVALENT THICKNESS FOR FIRE RESISTANCE[a, b, c] (Inches)			
	1 hour	2 hours	3 hours	4 hours
Solid brick of clay or shale[d]	2.7	3.8	4.9	6.0
Hollow brick or tile of clay or shale, unfilled	2.3	3.4	4.3	5.0
Hollow brick or tile of clay or shale, grouted or filled with materials specified in Section 722.4.1.1.3	3.0	4.4	5.5	6.6

For SI: 1 inch = 25.4 mm.

a. Equivalent thickness as determined from Section 722.4.1.1.

b. Calculated fire resistance between the hourly increments listed shall be determined by linear interpolation.

c. Where combustible members are framed in the wall, the thickness of solid material between the end of each member and the opposite face of the wall, or between members set in from opposite sides, shall be not less than 93 percent of the thickness shown.

d. For units in which the net cross-sectional area of cored brick in any plane parallel to the surface containing the cores is not less than 75 percent of the gross cross-sectional area measured in the same plane.

TABLE 722.4.1(2)
FIRE-RESISTANCE RATINGS FOR BEARING STEEL FRAME BRICK VENEER WALLS OR PARTITIONS

WALL OR PARTITION ASSEMBLY	PLASTER SIDE EXPOSED (hours)	BRICK FACED SIDE EXPOSED (hours)
Outside facing of steel studs: $^1/_2$" wood fiberboard sheathing next to studs, $^3/_4$" airspace formed with $^3/_4$" × $1^5/_8$" wood strips placed over the fiberboard and secured to the studs; metal or wire lath nailed to such strips, $3^3/_4$" brick veneer held in place by filling $^3/_4$" airspace between the brick and lath with mortar. Inside facing of studs: $^3/_4$" unsanded gypsum plaster on metal or wire lath attached to $^5/_{16}$" wood strips secured to edges of the studs.	1.5	4
Outside facing of steel studs: 1" insulation board sheathing attached to studs, 1" airspace, and $3^3/_4$" brick veneer attached to steel frame with metal ties every 5th course. Inside facing of studs: $^7/_8$" sanded gypsum plaster (1:2 mix) applied on metal or wire lath attached directly to the studs.	1.5	4
Same as above except use $^7/_8$" vermiculite-gypsum plaster or 1" sanded gypsum plaster (1:2 mix) applied to metal or wire.	2	4
Outside facing of steel studs: $^1/_2$" gypsum sheathing board, attached to studs, and $3^3/_4$" brick veneer attached to steel frame with metal ties every 5th course. Inside facing of studs: $^1/_2$" sanded gypsum plaster (1:2 mix) applied to $^1/_2$" perforated gypsum lath securely attached to studs and having strips of metal lath 3 inches wide applied to all horizontal joints of gypsum lath.	2	4

For SI: 1 inch = 25.4 mm.

pl = Coefficient for thickness of plaster.

Values for $R_n^{0.59}$ for use in Equation 7-9 are given in Table 722.4.1(3). Coefficients for thickness of plaster shall be selected from Table 722.4.1(4) based on the actual thickness of plaster applied to the wall or partition and whether one or two sides of the wall are plastered.

TABLE 722.4.1(3)
VALUES OF $R_n^{0.59}$

R_n 0.59	R (hours)
1	1.0
2	1.50
3	1.91
4	2.27

TABLE 722.4.1(4)
COEFFICIENTS FOR PLASTER, pl [a]

THICKNESS OF PLASTER (inch)	ONE SIDE	TWO SIDES
$^1/_2$	0.3	0.6
$^5/_8$	0.37	0.75
$^3/_4$	0.45	0.90

For SI: 1 inch = 25.4 mm.
a. Values listed in the table are for 1:3 sanded gypsum plaster.

TABLE 722.4.1(5)
REINFORCED MASONRY LINTELS

NOMINAL LINTEL WIDTH (inches)	MINIMUM LONGITUDINAL REINFORCEMENT COVER FOR FIRE RESISTANCE (inches)			
	1 hour	2 hours	3 hours	4 hours
6	$1^1/_2$	2	NP	NP
8	$1^1/_2$	$1^1/_2$	$1^3/_4$	3
10 or more	$1^1/_2$	$1^1/_2$	$1^1/_2$	$1^3/_4$

For SI: 1 inch = 25.4 mm.
NP = Not permitted.

TABLE 722.4.1(6)
REINFORCED CLAY MASONRY COLUMNS

COLUMN SIZE	FIRE-RESISTANCE RATING (hours)			
	1	2	3	4
Minimum column dimension (inches)	8	10	12	14

For SI:1 inch = 25.4 mm.

722.4.1.3 Multiwythe walls with airspace. Where a continuous airspace separates multiple wythes of the wall or partition, the total *fire-resistance rating* shall be determined by the formula:

$$R = (R_1^{0.59} + R_2^{0.59} + ... + R_n^{0.59} + as)^{1.7} \quad \textbf{(Equation 7-10)}$$

where:

R = The *fire-resistance rating* of the assembly (hours).

R_1, R_2 and R_n = The *fire-resistance rating* of the individual wythes (hours).

as = Coefficient for continuous airspace.

Values for $R_n^{0.59}$ for use in Equation 7-10 are given in Table 722.4.1(3). The coefficient for each continuous airspace of $^1/_2$ inch to $3^1/_2$ inches (12.7 to 89 mm) separating two individual wythes shall be 0.3.

722.4.1.4 Nonsymmetrical assemblies. For a wall having no finish on one side or having different types or thicknesses of finish on each side, the calculation procedures of this section shall be performed twice, assuming either side to be the fire-exposed side of the wall. The *fire resistance* of the wall shall not exceed the lower of the two values determined.

Exception: For *exterior walls* with a *fire separation distance* greater than 5 feet (1524 mm), the fire shall be assumed to occur on the interior side only.

722.4.2 Multiwythe walls. The *fire-resistance rating* for walls or partitions consisting of two or more dissimilar wythes shall be permitted to be determined by the formula:

$$R = (R_1^{0.59} + R_2^{0.59} + ... + R_n^{0.59})^{1.7} \quad \textbf{(Equation 7-11)}$$

where:

R = The *fire-resistance rating* of the assembly (hours).

R_1, R_2 and R_n = The *fire-resistance rating* of the individual wythes (hours).

Values for $R_n^{0.59}$ for use in Equation 7-11 are given in Table 722.4.1(3).

722.4.2.1 Multiwythe walls of different material. For walls that consist of two or more wythes of different materials (concrete or concrete masonry units) in combination with clay masonry units, the *fire-resistance rating* of the different materials shall be permitted to be determined from Table 722.2.1.1 for concrete; Table 722.3.2 for concrete masonry units or Table 722.4.1(1) or 722.4.1(2) for clay and tile masonry units.

722.4.3 Reinforced clay masonry lintels. *Fire-resistance ratings* for clay masonry lintels shall be determined based on the nominal width of the lintel and the minimum covering for the longitudinal reinforcement in accordance with Table 722.4.1(5).

722.4.4 Reinforced clay masonry columns. The *fire-resistance ratings* shall be determined based on the last plan dimension of the column in accordance with Table 722.4.1(6). The minimum cover for longitudinal reinforcement shall be 2 inches (51 mm).

722.5 Steel assemblies. The provisions of this section contain procedures by which the *fire-resistance ratings* of steel assemblies are established by calculations.

722.5.1 Structural steel columns. The *fire-resistance ratings* of structural steel columns shall be based on the size of the element and the type of protection provided in accordance with this section.

722.5.1.1 General. These procedures establish a basis for determining the *fire resistance* of column assemblies as a function of the thickness of fire-resistant material and, the weight, W, and heated perimeter, D, of structural steel columns. As used in these sections, W is the average weight of a structural steel column in pounds per linear foot. The heated perimeter, D, is the inside perimeter of the fire-resistant material in inches as illustrated in Figure 722.5.1(1).

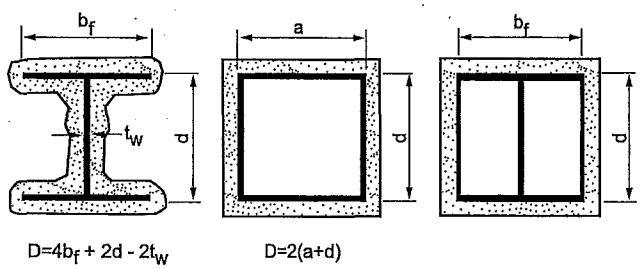

FIGURE 722.5.1(1)
DETERMINATION OF THE HEATED PERIMETER OF STRUCTURAL STEEL COLUMNS

722.5.1.1.1 Nonload-bearing protection. The application of these procedures shall be limited to column assemblies in which the fire-resistant material is not designed to carry any of the load acting on the column.

722.5.1.1.2 Embedments. In the absence of substantiating fire-endurance test results, ducts, conduit, piping, and similar mechanical, electrical, and plumbing installations shall not be embedded in any required fire-resistant materials.

722.5.1.1.3 Weight-to-perimeter ratio. Table 722.5.1(1) contains weight-to-heated-perimeter ratios (W/D) for both contour and box fire-resistant profiles, for the wide flange shapes most often used as columns. For different fire-resistant protection profiles or column cross sections, the weight-to-heated-perimeter ratios (W/D) shall be determined in accordance with the definitions given in this section.

722.5.1.2 Gypsum wallboard protection. The *fire resistance* of structural steel columns with weight-to-heated-perimeter ratios (W/D) less than or equal to 3.65 and that are protected with Type X gypsum wallboard shall be permitted to be determined from the following expression:

$$R = 130\left[\frac{h(W'/D)^{0.75}}{2}\right] \qquad \textbf{(Equation 7-12)}$$

where:

R = Fire resistance (minutes).

h = Total thickness of gypsum wallboard (inches).

D = Heated perimeter of the structural steel column (inches).

W' = Total weight of the structural steel column and gypsum wallboard protection (pounds per linear foot).

$W' = W + 50hD/144$.

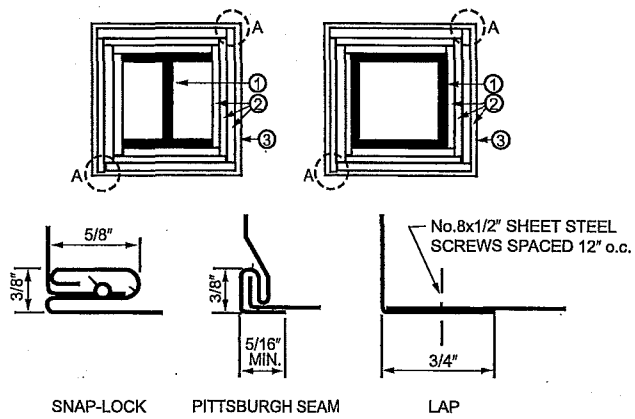

FIGURE 722.5.1(2)
GYPSUM-PROTECTED STRUCTURAL STEEL COLUMNS WITH SHEET STEEL COLUMN COVERS

For SI: 1 inch = 25.4 mm, 1 foot = 305 mm.

1. Structural steel column, either wide flange or tubular shapes.
2. Type X gypsum board or gypsum panel products in accordance with ASTM C 1177, C 1178, C 1278, C 1396 or C 1658. The total thickness of gypsum board or gypsum panel products calculated as h in Section 722.5.1.2 shall be applied vertically to an individual column using one of the following methods:
   1. As a single layer with no horizontal joints.
   2. As multiple layers with no horizontal joints permitted in any layer.
   3. As multiple layers with horizontal joints staggered not less than 12 inches vertically between layers and not less than 8 feet vertically in any single layer. The total required thickness of gypsum board or gypsum panel products shall be determined on the basis of the specified *fire-resistance rating* and the weight-to-heated-perimeter ratio (W/D) of the column. For *fire-resistance ratings* of 2 hours or less, one of the required layers of gypsum board or gypsum panel product may be applied to the exterior of the sheet steel column covers with 1-inch long Type S screws spaced 1 inch from the wallboard edge and 8 inches on center. For such installations, 0.0149-inch minimum thickness galvanized steel corner beads with $1^1/_2$-inch legs shall be attached to the wallboard with Type S screws spaced 12 inches on center.
3. For *fire-resistance ratings* of 3 hours or less, the column covers shall be fabricated from 0.0239-inch minimum thickness galvanized or stainless steel. For 4-hour *fire-resistance ratings*, the column covers shall be fabricated from 0.0239-inch minimum thickness stainless steel. The column covers shall be erected with the Snap Lock or Pittsburgh joint details.

   For *fire-resistance ratings* of 2 hours or less, column covers fabricated from 0.0269-inch minimum thickness galvanized or stainless steel shall be permitted to be erected with lap joints. The lap joints shall be permitted to be located anywhere around the perimeter of the column cover. The lap joints shall be secured with $^1/_2$-inch-long No. 8 sheet metal screws spaced 12 inches on center.

   The column covers shall be provided with a minimum expansion clearance of $^1/_8$ inch per linear foot between the ends of the cover and any restraining construction.

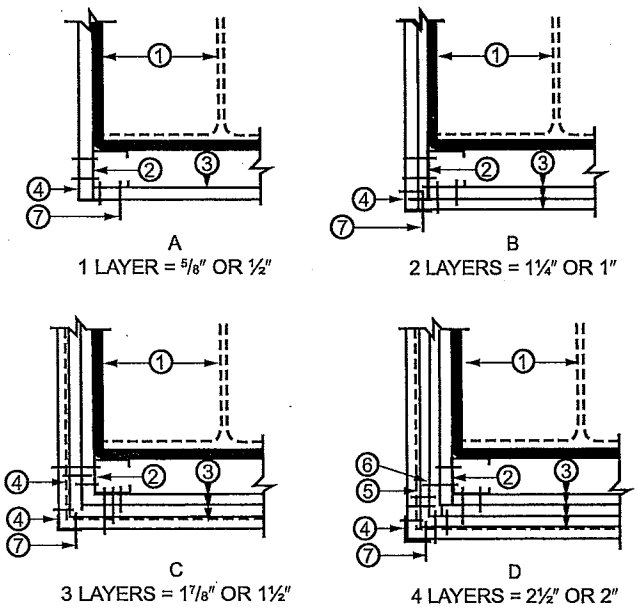

FIGURE 722.5.1(3)
GYPSUM-PROTECTED STRUCTURAL STEEL COLUMNS WITH STEEL STUD/SCREW ATTACHMENT SYSTEM

For SI: 1 inch = 25.4 mm, 1 foot = -305 mm.

1. Structural steel column, either wide flange or tubular shapes.
2. $1^5/_8$-inch deep studs fabricated from 0.0179-inch minimum thickness galvanized steel with $1^5/_{16}$ or $1^7/_{16}$-inch legs. The length of the steel studs shall be $^1/_2$ inch less than the height of the assembly.
3. Type X gypsum board or gypsum panel products in accordance with ASTM C177, C1178, C1278, C1396 or C1658. The total thickness of gypsum board or gypsum panel products calculated as *h* in Section 722.5.1.2 shall be applied vertically to an individual column using one of the following methods:
   1. As a single layer with no horizontal joints.
   2. As multiple layers with no horizontal joints permitted in any layer.
   3. As multiple layers with horizontal joints staggered not less than 12 inches vertically between layers and not less than 8 feet vertically in any single layer. The total required thickness of gypsum board or gypsum panel products shall be determined on the basis of the specified *fire-resistance rating* and the weight-to-heated-perimeter ratio (W/D) of the column.
4. Galvanized 0.0149-inch minimum thickness steel corner beads with $1^1/_2$-inch legs attached to the gypsum board or gypsum panel products with 1-inch-long Type S screws spaced 12 inches on center.
5. No. 18 SWG steel tie wires spaced 24 inches on center.
6. Sheet metal angles with 2-inch legs fabricated from 0.0221-inch minimum thickness galvanized steel.
7. Type S screws, 1 inch long, shall be used for attaching the first layer of gypsum board or gypsum panel product to the steel studs and the third layer to the sheet metal angles at 24 inches on center. Type S screws $1^3/_4$-inch long shall be used for attaching the second layer of gypsum board or gypsum panel product to the steel studs and the fourth layer to the sheet metal angles at 12 inches on center. Type S screws $2^1/_4$ inches long shall be used for attaching the third layer of gypsum board or gypsum panel product to the steel studs at 12 inches on center.

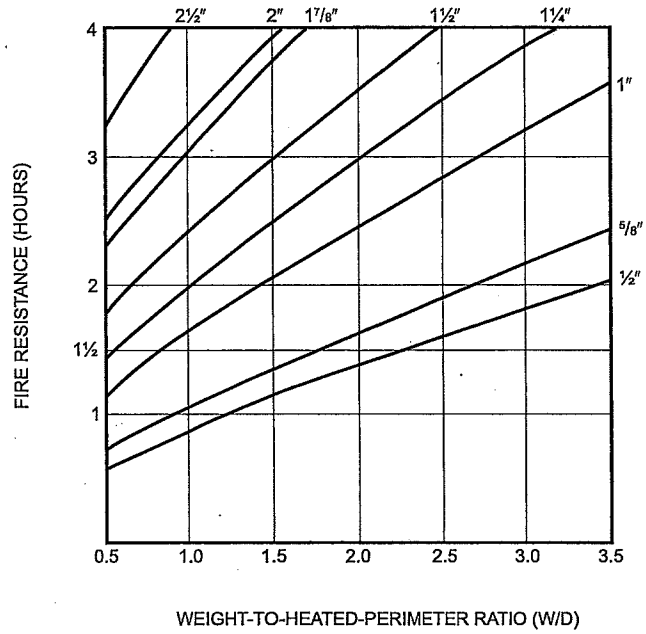

For SI: 1 inch = 25.4 mm, 1 pound per linear foot/inch = 0.059 kg/m/mm.

FIGURE 722.5.1(4)
FIRE RESISTANCE OF STRUCTURAL STEEL COLUMNS PROTECTED WITH VARIOUS THICKNESSES OF TYPE X GYPSUM WALLBOARD

a. The W/D ratios for typical wide flange columns are listed in Table 722.5.1(1). For other column shapes, the W/D ratios shall be determined in accordance with Section 722.5.1.1.

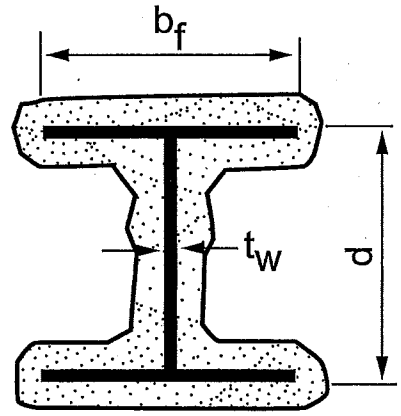

FIGURE 722.5.1(5)
WIDE FLANGE STRUCTURAL STEEL COLUMNS WITH SPRAYED FIRE-RESISTANT MATERIALS

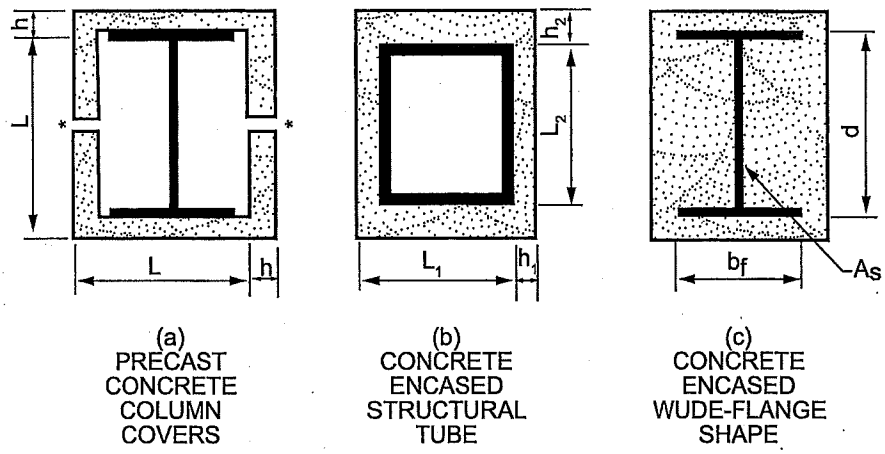

FIGURE 722.5.1(6)
CONCRETE PROTECTED STRUCTURAL STEEL COLUMNS[a,b]

a. When the inside perimeter of the concrete protection is not square, L shall be taken as the average of L_1 and L_2. When the thickness of concrete cover is not constant, h shall be taken as the average of h_1 and h_2.
b. Joints shall be protected with a minimum 1 inch thickness of ceramic fiber blanket but in no case less than one-half the thickness of the column cover (see Section 722.2.1.3).

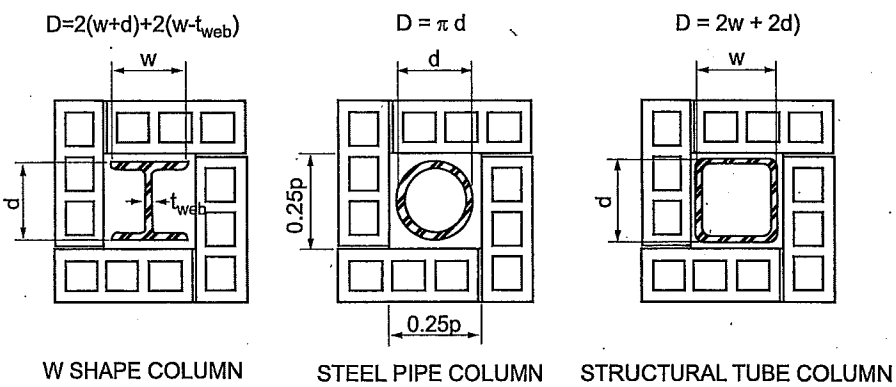

FIGURE 722.5.1(7)
CONCRETE OR CLAY MASONRY PROTECTED STRUCTURAL STEEL COLUMNS

For SI: 1 inch = 25.4 mm.
d = Depth of a wide flange column, outside diameter of pipe column, or outside dimension of structural tubing column (inches).
t_{web} = Thickness of web of wide flange column (inches).
w = Width of flange of wide flange column (inches).

722.5.1.2.1 Attachment. The gypsum board or gypsum panel products shall be supported as illustrated in either Figure 722.5.1(2) for *fire-resistance ratings* of 4 hours or less, or Figure 722.5.1(3) for *fire-resistance ratings* of 3 hours or less.

722.5.1.2.2 Gypsum wallboard equivalent to concrete. The determination of the *fire resistance* of structural steel columns from Figure 722.5.1(4) is permitted for various thicknesses of gypsum wallboard as a function of the weight-to-heated-perimeter ratio (W/D) of the column. For structural steel columns with weight-to-heated-perimeter ratios (W/D) greater than 3.65, the thickness of gypsum wallboard required for specified *fire-resistance ratings* shall be the same as the thickness determined for a $W14 \times 233$ wide flange shape.

722.5.1.3 Sprayed fire-resistant materials. The *fire resistance* of wide-flange structural steel columns protected with sprayed fire-resistant materials, as illustrated in Figure 722.5.1(5), shall be permitted to be determined from the following expression:

$$R = [C_1(W/D) + C_2]h \qquad \textbf{(Equation 7-13)}$$

where:

R = Fire resistance (minutes).

h = Thickness of sprayed fire-resistant material (inches).

D = Heated perimeter of the structural steel column (inches).

C_1 and C_2 = Material-dependent constants.

W = Weight of structural steel columns (pounds per linear foot).

The *fire resistance* of structural steel columns protected with intumescent or mastic fire-resistant coatings shall be determined on the basis of fire-resistance tests in accordance with Section 703.2.

722.5.1.3.1 Material-dependent constants. The material-dependent constants, C_1 and C_2, shall be determined for specific fire-resistant materials on the basis of standard fire endurance tests in accordance with Section 703.2. Unless evidence is submitted to the *building official* substantiating a broader application, this expression shall be limited to determining the *fire resistance* of structural steel columns with weight-to-heated-perimeter ratios (W/D) between the largest and smallest columns for which standard fire-resistance test results are available.

722.5.1.3.2 Identification. Sprayed fire-resistant materials shall be identified by density and thickness required for a given *fire-resistance rating*.

722.5.1.4 Concrete-protected columns. The *fire resistance* of structural steel columns protected with concrete, as illustrated in Figure 722.5.1(6)(a) and (b), shall be permitted to be determined from the following expression:

$$R = R_o(1 + 0.03_m) \qquad \textbf{(Equation 7-14)}$$

where:

$$R_o = 10\,(W/D)^{0.7} + 17\,(h^{1.6}/k_c^{0.2}) \times [1 + 26\,\{H/p_c c_c h\,(L + h)\}^{0.8}]$$

As used in these expressions:

R = Fire endurance at equilibrium moisture conditions (minutes).

R_o = Fire endurance at zero moisture content (minutes).

m = Equilibrium moisture content of the concrete by volume (percent).

W = Average weight of the structural steel column (pounds per linear foot).

D = Heated perimeter of the structural steel column (inches).

h = Thickness of the concrete cover (inches).

k_c = Ambient temperature thermal conductivity of the concrete (Btu/hr ft °F).

H = Ambient temperature thermal capacity of the steel column = 0.11W (Btu/ ft °F).

p_c = Concrete density (pounds per cubic foot).

c_c = Ambient temperature specific heat of concrete (Btu/lb °F).

L = Interior dimension of one side of a square concrete box protection (inches).

722.5.1.4.1 Reentrant space filled. For wide-flange structural steel columns completely encased in concrete with all reentrant spaces filled [Figure 722.5.1(6)(c)], the thermal capacity of the concrete within the reentrant spaces shall be permitted to be added to the thermal capacity of the steel column, as follows:

$$H = 0.11\,W + (p_c c_c/144)\,(b_f d - A_s) \qquad \textbf{(Equation 7-15)}$$

where:

b_f = Flange width of the structural steel column (inches).

d = Depth of the structural steel column (inches).

A_s = Cross-sectional area of the steel column (square inches).

722.5.1.4.2 Concrete properties unknown. If specific data on the properties of concrete are not available, the values given in Table 722.5.1(2) are permitted.

722.5.1.4.3 Minimum concrete cover. For structural steel column encased in concrete with all reentrant spaces filled, Figure 722.5.1(6)(c) and Tables 722.5.1(7) and 722.5.1(8) indicate the thickness of concrete cover required for various *fire-resistance ratings* for typical wide-flange sections. The thicknesses of concrete indicated in these tables apply to structural steel columns larger than those listed.

722.5.1.4.4 Minimum precast concrete cover. For structural steel columns protected with precast concrete column covers as shown in Figure 722.5.1(6)(a), Tables 722.5.1(9) and 722.5.1(10) indicate the thickness of the column covers required for various *fire-resistance ratings* for typical wide-flange shapes. The thicknesses of concrete given in these tables apply to structural steel columns larger than those listed.

722.5.1.4.5 Masonry protection. The *fire resistance* of structural steel columns protected with concrete masonry units or clay masonry units as illustrated in Figure 722.5.1(7) shall be permitted to be determined from the following expression:

$$R = 0.17\,(W/D)^{0.7} + [0.285\,(T_e^{1.6}/K^{0.2})]\,[1.0 + 42.7\,\{(A_s/d_m\,T_e)/(0.25p + T_e)\}^{0.8}] \qquad \textbf{(Equation 7-16)}$$

where:

R = *Fire-resistance rating* of column assembly (hours).

W = Average weight of structural steel column (pounds per foot).

D = Heated perimeter of structural steel column (inches) [see Figure 722.5.1(7)].

T_e = Equivalent thickness of concrete or clay masonry unit (inches) (see Table 722.3.2 Note a or Section 722.4.1).

K = Thermal conductivity of concrete or clay masonry unit (Btu/hr · ft · °F) [see Table 722.5.1(3)].

A_s = Cross-sectional area of structural steel column (square inches).

d_m = Density of the concrete or clay masonry unit (pounds per cubic foot).

p = Inner perimeter of concrete or clay masonry protection (inches) [see Figure 722.5.1(7)].

722.5.1.4.6 Equivalent concrete masonry thickness. For structural steel columns protected with concrete masonry, Table 722.5.1(5) gives the equivalent thickness of concrete masonry required for various *fire-resistance ratings* for typical column shapes. For structural steel columns protected with clay masonry, Table 722.5.1(6) gives the equivalent thickness of concrete masonry required for various *fire-resistance ratings* for typical column shapes.

722.5.2 Structural steel beams and girders. The *fire-resistance ratings* of structural steel beams and girders shall be based upon the size of the element and the type of protection provided in accordance with this section.

722.5.2.1 Determination of *fire resistance*. These procedures establish a basis for determining resistance of structural steel beams and girders that differ in size from that specified in *approved* fire-resistance-rated assemblies as a function of the thickness of fire-resistant material and the weight (W) and heated perimeter (D) of the beam or girder. As used in these sections, W is the average weight of a *structural steel element* in pounds per linear foot (plf). The heated perimeter, D, is the inside perimeter of the fire-resistant material in inches as illustrated in Figure 722.5.2.

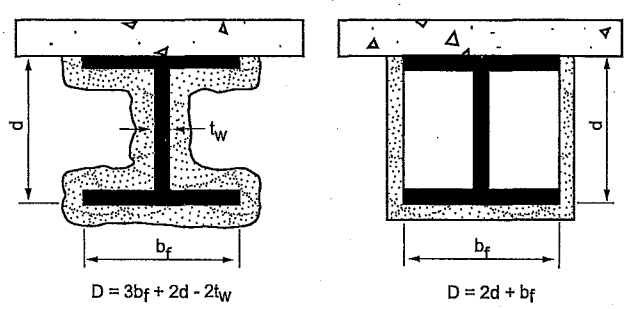

FIGURE 722.5.2
DETERMINATION OF THE HEATED PERIMETER OF STRUCTURAL STEEL BEAMS AND GIRDERS

722.5.2.1.1 Weight-to-heated perimeter. The weight-to-heated-perimeter ratios (W/D), for both contour and box fire-resistant protection profiles, for the wide flange shapes most often used as beams or girders are given in Table 722.5.1(4). For different shapes, the weight-to-heated-perimeter ratios (W/D) shall be determined in accordance with the definitions given in this section.

722.5.2.1.2 Beam and girder substitutions. Except as provided for in Section 722.5.2.2, structural steel beams in *approved* fire-resistance-rated assemblies shall be considered the minimum permissible size. Other beam or girder shapes shall be permitted to be substituted provided that the weight-to-heated-perimeter ratio (W/D) of the substitute beam is equal to or greater than that of the beam specified in the *approved* assembly.

722.5.2.2 Sprayed fire-resistant materials. The provisions in this section apply to structural steel beams and girders protected with sprayed fire-resistant materials. Larger or smaller beam and girder shapes shall be permitted to be substituted for beams specified in *approved* unrestrained or restrained fire-resistance-rated assemblies, provided that the thickness of the fire-resistant material is adjusted in accordance with the following expression:

$$h_2 = h_1\,[(W_1/D_1) + 0.60]\,/\,[(W_2/D_2) + 0.60] \qquad \textbf{(Equation 7-17)}$$

where:

h = Thickness of sprayed fire-resistant material in inches.

W = Weight of the structural steel beam or girder in pounds per linear foot.

D = Heated perimeter of the structural steel beam in inches.

Subscript 1 refers to the beam and fire-resistant material thickness in the *approved* assembly.

Subscript 2 refers to the substitute beam or girder and the required thickness of fire-resistant material.

The *fire resistance* of structural steel beams and girders protected with intumescent or mastic fire-resistant coatings shall be determined on the basis of fire-resistance tests in accordance with Section 703.2.

722.5.2.2.1 Minimum thickness. The use of Equation 7-17 is subject to the following conditions:

1. The weight-to-heated-perimeter ratio for the substitute beam or girder (W_2/D_2) shall be not less than 0.37.
2. The thickness of fire protection materials calculated for the substitute beam or girder (T_1) shall be not less than $^3/_8$ inch (9.5 mm).
3. The unrestrained or restrained beam rating shall be not less than 1 hour.
4. Where used to adjust the material thickness for a restrained beam, the use of this procedure is limited to structural steel sections classified as compact in accordance with AISC 360.

TABLE 722.5.1(1)
W/D RATIOS FOR STEEL COLUMNS

STRUCTURAL SHAPE	CONTOUR PROFILE	BOX PROFILE	STRUCTURAL SHAPE	CONTOUR PROFILE	BOX PROFILE
W14 × 233	2.55	3.65	W10 × 112	1.81	2.57
× 211	2.32	3.35	× 100	1.64	2.33
× 193	2.14	3.09	× 88	1.45	2.08
× 176	1.96	2.85	× 77	1.28	1.85
× 159	1.78	2.60	× 68	1.15	1.66
× 145	1.64	2.39	× 60	1.01	1.48
× 132	1.56	2.25	× 54	0.922	1.34
× 120	1.42	2.06	× 49	0.84	1.23
× 109	1.29	1.88	× 45	0.888	1.24
× 99	1.18	1.72	× 39	0.78	1.09
× 90	1.08	1.58	× 33	0.661	0.93
× 82	1.23	1.68			
× 74	1.12	1.53	W8 × 67	1.37	1.94
× 68	1.04	1.41	× 58	1.20	1.71
× 61	0.928	1.28	× 48	1.00	1.44
× 53	0.915	1.21	× 40	0.849	1.23
× 48	0.835	1.10	× 35	0.749	1.08
× 43	0.752	0.99	× 31	0.665	0.97
			× 28	0.688	0.96
W12 × 190	2.50	3.51	× 24	0.591	0.83
× 170	2.26	3.20	× 21	0.577	0.77
× 152	2.04	2.90	× 18	0.499	0.67
× 136	1.86	2.63			
× 120	1.65	2.36	W6 ×25	0.696	1.00
× 106	1.47	2.11	× 20	0.563	0.82
× 96	1.34	1.93	× 16	0.584	0.78
× 87	1.22	1.76	× 15	0.431	0.63
× 79	1.11	1.61	× 12	0.448	0.60
× 72	1.02	1.48	× 9	0.338	0.46
× 65	0.925	1.35			
× 58	0.925	1.31	W5 ×19	0.644	0.93
× 53	0.855	1.20	× 16	0.55	0.80
× 50	0.909	1.23			
× 45	0.829	1.12	W4 ×13	0.556	0.79
× 40	0.734	1.00			

For SI: 1 pound per linear foot per inch = 0.059 kg/m/mm.

TABLE 722.5.1(2)
PROPERTIES OF CONCRETE

PROPERTY	NORMAL-WEIGHT CONCRETE	STRUCTURAL LIGHTWEIGHT CONCRETE
Thermal conductivity (k_c)	0.95 Btu/hr · ft · °F	0.35 Btu/hr · ft · °F
Specific heat (c_c)	0.20 Btu/lb °F	0.20 Btu/lb °F
Density (P_c)	145 lb/ft^3	110 lb/ft^3
Equilibrium (free) moisture content (m) by volume	4%	5%

For SI: 1 inch = 25.4 mm, 1 foot = 304.8 mm, 1 lb/ft^3 = 16.0185 kg/m^3, Btu/hr • ft • °F = 1.731 W/(m • K).

TABLE 722.5.1(3)
THERMAL CONDUCTIVITY OF CONCRETE OR CLAY MASONRY UNITS

DENSITY (d_m) OF UNITS (lb/ft³)	THERMAL CONDUCTIVITY (K) OF UNITS (Btu/hr · ft · °F)
Concrete Masonry Units	
80	0.207
85	0.228
90	0.252
95	0.278
100	0.308
105	0.340
110	0.376
115	0.416
120	0.459
125	0.508
130	0.561
135	0.620
140	0.685
145	0.758
150	0.837
Clay Masonry Units	
120	1.25
130	2.25

For SI: 1 pound per cubic foot = 16.0185 kg/m³, Btu/hr · ft · °F = 1.731 W/(m · K).

TABLE 722.5.1(4)
WEIGHT-TO-HEATED-PERIMETER RATIOS (*W/D*) FOR TYPICAL WIDE FLANGE BEAM AND GIRDER SHAPES

STRUCTURAL SHAPE	CONTOUR PROFILE	BOX PROFILE	STRUCTURAL SHAPE	CONTOUR PROFILE	BOX PROFILE
W36 x 300	2.50	3.33	W24 x 68	0.942	1.21
x 280	2.35	3.12	x 62	0.934	1.14
x 260	2.18	2.92	x 55	0.828	1.02
x 245	2.08	2.76			
x 230	1.95	2.61	W21 x 147	1.87	2.60
x 210	1.96	2.45	x 132	1.68	2.35
x 194	1.81	2.28	x 122	1.57	2.19
x 182	1.72	2.15	x 111	1.43	2.01
x 170	1.60	2.01	x 101	1.30	1.84
x 160	1.51	1.90	x 93	1.40	1.80
x 150	1.43	1.79	x 83	1.26	1.62
x 135	1.29	1.63	x 73	1.11	1.44
			x 68	1.04	1.35

(continued)

TABLE 722.5.1(4)—continued
WEIGHT-TO-HEATED-PERIMETER RATIOS (*W/D*) FOR TYPICAL WIDE FLANGE BEAM AND GIRDER SHAPES

STRUCTURAL SHAPE	CONTOUR PROFILE	BOX PROFILE	STRUCTURAL SHAPE	CONTOUR PROFILE	BOX PROFILE
W33 x 241	2.13	2.86	W21 x 62	0.952	1.23
x 221	1.97	2.64	x 57	0.952	1.17
x 201	1.79	2.42	x 50	0.838	1.04
x 152	1.53	1.94	x 44	0.746	0.92
x 141	1.43	1.80			
x 130	1.32	1.67	W18 x 119	1.72	2.42
x 118	1.21	1.53	x 106	1.55	2.18
			x 97	1.42	2.01
W30 x 211	2.01	2.74	x 86	1.27	1.80
x 191	1.85	2.50	x 76	1.13	1.60
x 173	1.66	2.28	x 71	1.22	1.59
x 132	1.47	1.85	x 65	1.13	1.47
x 124	1.39	1.75	x 60	1.04	1.36
x 116	1.30	1.65	x 55	0.963	1.26
x 108	1.21	1.54	x 50	0.88	1.15
x 99	1.12	1.42	x 46	0.878	1.09
			x 40	0.768	0.96
W27 x 178	1.87	2.55	x 35	0.672	0.85
x 161	1.70	2.33			
x 146	1.55	2.12	W16 x 100	1.59	2.25
x 114	1.39	1.76	x 89	1.43	2.03
x 102	1.24	1.59	x 77	1.25	1.78
x 94	1.15	1.47	x 67	1.09	1.56
x 84	1.03	1.33	x 57	1.09	1.43
			x 50	0.962	1.26
			x 45	0.870	1.15
W24 x 162	1.88	2.57	x 40	0.780	1.03
x 146	1.70	2.34	x 36	0.702	0.93
x 131	1.54	2.12	x 31	0.661	0.83
x 117	1.38	1.91	x 26	0.558	0.70
x 104	1.24	1.71			
x 94	1.28	1.63	W14 x 132	1.89	3.00
x 84	1.15	1.47	x 120	1.71	2.75
x 76	1.05	1.34	x 109	1.57	2.52
W14 x 99	1.43	2.31	W10 x 30	0.806	1.12
x 90	1.31	2.11	x 26	0.708	0.98
x 82	1.45	2.12	x 22	0.606	0.84
x 74	1.32	1.93	x 19	0.607	0.78
x 68	1.22	1.78	x 17	0.543	0.70
x 61	1.10	1.61	x 15	0.484	0.63
x 53	1.06	1.48	x 12	0.392	0.51
x 48	0.970	1.35			

(continued)

TABLE 722.5.1(4)—continued
WEIGHT-TO-HEATED-PERIMETER RATIOS (*W/D*) FOR TYPICAL WIDE FLANGE BEAM AND GIRDER SHAPES

STRUCTURAL SHAPE	CONTOUR PROFILE	BOX PROFILE	STRUCTURAL SHAPE	CONTOUR PROFILE	BOX PROFILE
W14 x 43	0.874	1.22	W8 x 67	1.65	2.55
x 38	0.809	1.09	x 58	1.44	2.26
x 34	0.725	0.98	x 48	1.21	1.91
x 30	0.644	0.87	x 40	1.03	1.63
x 26	0.628	0.79	x 35	0.907	1.44
x 22	0.534	0.68	x 31	0.803	1.29
			x 28	0.819	1.24
W12 x 87	1.47	2.34	x 24	0.704	1.07
x 79	1.34	2.14	x 21	0.675	0.96
x 72	1.23	1.97	x 18	0.583	0.84
x 65	1.11	1.79	x 15	0.551	0.74
x 58	1.10	1.69	x 13	0.483	0.65
x 53	1.02	1.55	x 10	0.375	0.51
x 50	1.06	1.54			
x 45	0.974	1.40	W6 x 25	0.839	1.33
x 40	0.860	1.25	x 20	0.678	1.09
x 35	0.810	1.11	x 16	0.684	0.96
x 30	0.699	0.96	x 15	0.521	0.83
x 26	0.612	0.84	x 12	0.526	0.75
x 22	0.623	0.77	x 9	0.398	0.57
x 19	0.540	0.67			
x 16	0.457	0.57	W5 x 19	0.776	1.24
x 14	0.405	0.50	x 16	0.664	1.07
W10 x 112	2.17	3.38	W4 x 13	0.670	1.05
x 100	1.97	3.07			
x 88	1.74	2.75			
x 77	1.54	2.45			
x 68	1.38	2.20			
x 60	1.22	1.97			
x 54	1.11	1.79			
x 49	1.01	1.64			
x 45	1.06	1.59			
x 39	0.94	1.40			
x 33	0.77	1.20			

For SI: 1 pound per linear foot per inch = 0.059 kg/m/mm.

TABLE 722.5.1(5)
FIRE RESISTANCE OF CONCRETE MASONRY PROTECTED STEEL COLUMNS

COLUMN SIZE	CONCRETE MASONRY DENSITY POUNDS PER CUBIC FOOT	MINIMUM REQUIRED EQUIVALENT THICKNESS FOR FIRE-RESISTANCE RATING OF CONCRETE MASONRY PROTECTION ASSEMBLY, T_e (inches)				COLUMN SIZE	CONCRETE MASONRY DENSITY POUNDS PER CUBIC FOOT	MINIMUM REQUIRED EQUIVALENT THICKNESS FOR FIRE-RESISTANCE RATING OF CONCRETE MASONRY PROTECTION ASSEMBLY, T_e (inches)			
		1 hour	2 hours	3 hours	4 hours			1 hour	2 hours	3 hours	4 hours
W14 × 82	80	0.74	1.61	2.36	3.04	W10 × 68	80	0.72	1.58	2.33	3.01
	100	0.89	1.85	2.67	3.40		100	0.87	1.83	2.65	3.38
	110	0.96	1.97	2.81	3.57		110	0.94	1.95	2.79	3.55
	120	1.03	2.08	2.95	3.73		120	1.01	2.06	2.94	3.72
W14 × 68	80	0.83	1.70	2.45	3.13	W10 × 54	80	0.88	1.76	2.53	3.21
	100	0.99	1.95	2.76	3.49		100	1.04	2.01	2.83	3.57
	110	1.06	2.06	2.91	3.66		110	1.11	2.12	2.98	3.73
	120	1.14	2.18	3.05	3.82		120	1.19	2.24	3.12	3.90
W14 × 53	80	0.91	1.81	2.58	3.27	W10 × 45	80	0.92	1.83	2.60	3.30
	100	1.07	2.05	2.88	3.62		100	1.08	2.07	2.90	3.64
	110	1.15	2.17	3.02	3.78		110	1.16	2.18	3.04	3.80
	120	1.22	2.28	3.16	3.94		120	1.23	2.29	3.18	3.96
W14 × 43	80	1.01	1.93	2.71	3.41	W10 × 33	80	1.06	2.00	2.79	3.49
	100	1.17	2.17	3.00	3.74		100	1.22	2.23	3.07	3.81
	110	1.25	2.28	3.14	3.90		110	1.30	2.34	3.20	3.96
	120	1.32	2.38	3.27	4.05		120	1.37	2.44	3.33	4.12
W12 × 72	80	0.81	1.66	2.41	3.09	W8 × 40	80	0.94	1.85	2.63	3.33
	100	0.91	1.88	2.70	3.43		100	1.10	2.10	2.93	3.67
	110	0.99	1.99	2.84	3.60		110	1.18	2.21	3.07	3.83
	120	1.06	2.10	2.98	3.76		120	1.25	2.32	3.20	3.99
W12 × 58	80	0.88	1.76	2.52	3.21	W8 × 31	80	1.06	2.00	2.78	3.49
	100	1.04	2.01	2.83	3.56		100	1.22	2.23	3.07	3.81
	110	1.11	2.12	2.97	3.73		110	1.29	2.33	3.20	3.97
	120	1.19	2.23	3.11	3.89		120	1.36	2.44	3.33	4.12
W12 × 50	80	0.91	1.81	2.58	3.27	W8 × 24	80	1.14	2.09	2.89	3.59
	100	1.07	2.05	2.88	3.62		100	1.29	2.31	3.16	3.90
	110	1.15	2.17	3.02	3.78		110	1.36	2.42	3.28	4.05
	120	1.22	2.28	3.16	3.94		120	1.43	2.52	3.41	4.20
W12 × 40	80	1.01	1.94	2.72	3.41	W8 × 18	80	1.22	2.20	3.01	3.72
	100	1.17	2.17	3.01	3.75		100	1.36	2.40	3.25	4.01
	110	1.25	2.28	3.14	3.90		110	1.42	2.50	3.37	4.14
	120	1.32	2.39	3.27	4.06		120	1.48	2.59	3.49	4.28
4 × 4 × $^1/_2$ wall thickness	80	0.93	1.90	2.71	3.43	4 double extra strong 0.674 wall thickness	80	0.80	1.75	2.56	3.28
	100	1.08	2.13	2.99	3.76		100	0.95	1.99	2.85	3.62
	110	1.16	2.24	3.13	3.91		110	1.02	2.10	2.99	3.78
	120	1.22	2.34	3.26	4.06		120	1.09	2.20	3.12	3.93
4 × 4 × $^3/_8$ wall thickness	80	1.05	2.03	2.84	3.57	4 extra strong 0.337 wall thickness	80	1.12	2.11	2.93	3.65
	100	1.20	2.25	3.11	3.88		100	1.26	2.32	3.19	3.95
	110	1.27	2.35	3.24	4.02		110	1.33	2.42	3.31	4.09
	120	1.34	2.45	3.37	4.17		120	1.40	2.52	3.43	4.23

(continued)

TABLE 722.5.1(5)—continued
FIRE RESISTANCE OF CONCRETE MASONRY PROTECTED STEEL COLUMNS

COLUMN SIZE	CONCRETE MASONRY DENSITY POUNDS PER CUBIC FOOT	MINIMUM REQUIRED EQUIVALENT THICKNESS FOR FIRE-RESISTANCE RATING OF CONCRETE MASONRY PROTECTION ASSEMBLY, T_e (inches)				COLUMN SIZE	CONCRETE MASONRY DENSITY POUNDS PER CUBIC FOOT	MINIMUM REQUIRED EQUIVALENT THICKNESS FOR FIRE-RESISTANCE RATING OF CONCRETE MASONRY PROTECTION ASSEMBLY, T_e (inches)			
		1 hour	2 hours	3 hours	4 hours			1 hour	2 hours	3 hours	4 hours
$4 \times 4 \times {}^1/_4$ wall thickness	80	1.21	2.20	3.01	3.73	4 standard 0.237 wall thickness	80	1.26	2.25	3.07	3.79
	100	1.35	2.40	3.26	4.02		100	1.40	2.45	3.31	4.07
	110	1.41	2.50	3.38	4.16		110	1.46	2.55	3.43	4.21
	120	1.48	2.59	3.50	4.30		120	1.53	2.64	3.54	4.34
$6 \times 6 \times {}^1/_2$ wall thickness	80	0.82	1.75	2.54	3.25	5 double extra strong 0.750 wall thickness	80	0.70	1.61	2.40	3.12
	100	0.98	1.99	2.84	3.59		100	0.85	1.86	2.71	3.47
	110	1.05	2.10	2.98	3.75		110	0.91	1.97	2.85	3.63
	120	1.12	2.21	3.11	3.91		120	0.98	2.02	2.99	3.79
$6 \times 6 \times {}^3/_8$ wall thickness	80	0.96	1.91	2.71	3.42	5 extra strong 0.375 wall thickness	80	1.04	2.01	2.83	3.54
	100	1.12	2.14	3.00	3.75		100	1.19	2.23	3.09	3.85
	110	1.19	2.25	3.13	3.90		110	1.26	2.34	3.22	4.00
	120	1.26	2.35	3.26	4.05		120	1.32	2.44	3.34	4.14
$6 \times 6 \times {}^1/_4$ wall thickness	80	1.14	2.11	2.92	3.63	5 standard 0.258 wall thickness	80	1.20	2.19	3.00	3.72
	100	1.29	2.32	3.18	3.93		100	1.34	2.39	3.25	4.00
	110	1.36	2.43	3.30	4.08		110	1.41	2.49	3.37	4.14
	120	1.42	2.52	3.43	4.22		120	1.47	2.58	3.49	4.28
$8 \times 8 \times {}^1/_2$ wall thickness	80	0.77	1.66	2.44	3.13	6 double extra strong 0.864 wall thickness	80	0.59	1.46	2.23	2.92
	100	0.92	1.91	2.75	3.49		100	0.73	1.71	2.54	3.29
	110	1.00	2.02	2.89	3.66		110	0.80	1.82	2.69	3.47
	120	1.07	2.14	3.03	3.82		120	0.86	1.93	2.83	3.63
$8 \times 8 \times {}^3/_8$ wall thickness	80	0.91	1.84	2.63	3.33	6 extra strong 0.432 wall thickness	80	0.94	1.90	2.70	3.42
	100	1.07	2.08	2.92	3.67		100	1.10	2.13	2.98	3.74
	110	1.14	2.19	3.06	3.83		110	1.17	2.23	3.11	3.89
	120	1.21	2.29	3.19	3.98		120	1.24	2.34	3.24	4.04
$8 \times 8 \times {}^1/_4$ wall thickness	80	1.10	2.06	2.86	3.57	6 standard 0.280 wall thickness	80	1.14	2.12	2.93	3.64
	100	1.25	2.28	3.13	3.87		100	1.29	2.33	3.19	3.94
	110	1.32	2.38	3.25	4.02		110	1.36	2.43	3.31	4.08
	120	1.39	2.48	3.38	4.17		120	1.42	2.53	3.43	4.22

For SI: 1 inch = 25.4 mm, 1 pound per cubic feet = 16.02 kg/m^3.

Note: Tabulated values assume 1-inch air gap between masonry and steel section.

TABLE 722.5.1(6)
FIRE RESISTANCE OF CLAY MASONRY PROTECTED STEEL COLUMNS

COLUMN SIZE	CLAY MASONRY DENSITY, POUNDS PER CUBIC FOOT	MINIMUM REQUIRED EQUIVALENT THICKNESS FOR FIRE-RESISTANCE RATING OF CLAY MASONRY PROTECTION ASSEMBLY, T_e (inches)			
		1 hour	2 hours	3 hours	4 hours
W14 × 82	120	1.23	2.42	3.41	4.29
	130	1.40	2.70	3.78	4.74
W14 × 68	120	1.34	2.54	3.54	4.43
	130	1.51	2.82	3.91	4.87
W14 × 53	120	1.43	2.65	3.65	4.54
	130	1.61	2.93	4.02	4.98
W14 × 43	120	1.54	2.76	3.77	4.66
	130	1.72	3.04	4.13	5.09
W12 × 72	120	1.32	2.52	3.51	4.40
	130	1.50	2.80	3.88	4.84
W12 × 58	120	1.40	2.61	3.61	4.50
	130	1.57	2.89	3.98	4.94
W12 × 50	120	1.43	2.65	3.66	4.55
	130	1.61	2.93	4.02	4.99
W12 × 40	120	1.54	2.77	3.78	4.67
	130	1.72	3.05	4.14	5.10

COLUMN SIZE	CLAY MASONRY DENSITY, POUNDS PER CUBIC FOOT	MINIMUM REQUIRED EQUIVALENT THICKNESS FOR FIRE-RESISTANCE RATING OF CLAY MASONRY PROTECTION ASSEMBLY, T_e (inches)			
		1 hour	2 hours	3 hours	4 hours
W10 × 68	120	1.27	2.46	3.26	4.35
	130	1.44	2.75	3.83	4.80
W10 × 54	120	1.40	2.61	3.62	4.51
	130	1.58	2.89	3.98	4.95
W10 × 45	120	1.44	2.66	3.67	4.57
	130	1.62	2.95	4.04	5.01
W10 × 33	120	1.59	2.82	3.84	4.73
	130	1.77	3.10	4.20	5.13
W8 × 40	120	1.47	2.70	3.71	4.61
	130	1.65	2.98	4.08	5.04
W8 × 31	120	1.59	2.82	3.84	4.73
	130	1.77	3.10	4.20	5.17
W8 × 24	120	1.66	2.90	3.92	4.82
	130	1.84	3.18	4.28	5.25
W8 × 18	120	1.75	3.00	4.01	4.91
	130	1.93	3.27	4.37	5.34

STEEL TUBING

NOMINAL TUBE SIZE (inches)	CLAY MASONRY DENSITY, POUNDS PER CUBIC FOOT	MINIMUM REQUIRED EQUIVALENT THICKNESS FOR FIRE-RESISTANCE RATING OF CLAY MASONRY PROTECTION ASSEMBLY, T_e (inches)			
		1 hour	2 hours	3 hours	4 hours
4 × 4 × 1/2 wall thickness	120	1.44	2.72	3.76	4.68
	130	1.62	3.00	4.12	5.11
4 × 4 × 3/8 wall thickness	120	1.56	2.84	3.88	4.78
	130	1.74	3.12	4.23	5.21
4 × 4 × 1/4 wall thickness	120	1.72	2.99	4.02	4.92
	130	1.89	3.26	4.37	5.34
6 × 6 × 1/2 wall thickness	120	1.33	2.58	3.62	4.52
	130	1.50	2.86	3.98	4.96
6 × 6 × 3/8 wall thickness	120	1.48	2.74	3.76	4.67
	130	1.65	3.01	4.13	5.10
6 × 6 × 1/4 wall thickness	120	1.66	2.91	3.94	4.84
	130	1.83	3.19	4.30	5.27
8 × 8 × 1/2 wall thickness	120	1.27	2.50	3.52	4.42
	130	1.44	2.78	3.89	4.86
8 × 8 × 3/8 wall thickness	120	1.43	2.67	3.69	4.59
	130	1.60	2.95	4.05	5.02
8 × 8 × 1/4 wall thickness	120	1.62	2.87	3.89	4.78
	130	1.79	3.14	4.24	5.21

STEEL PIPE

NOMINAL PIPE SIZE (inches)	CLAY MASONRY DENSITY, POUNDS PER CUBIC FOOT	MINIMUM REQUIRED EQUIVALENT THICKNESS FOR FIRE-RESISTANCE RATING OF CLAY MASONRY PROTECTION ASSEMBLY, T_e (inches)			
		1 hour	2 hours	3 hours	4 hours
4 double extra strong 0.674 wall thickness	120	1.26	2.55	3.60	4.52
	130	1.42	2.82	3.96	4.95
4 extra strong 0.337 wall thickness	120	1.60	2.89	3.92	4.83
	130	1.77	3.16	4.28	5.25
4 standard 0.237 wall thickness	120	1.74	3.02	4.05	4.95
	130	1.92	3.29	4.40	5.37
5 double extra strong 0.750 wall thickness	120	1.17	2.44	3.48	4.40
	130	1.33	2.72	3.84	4.83
5 extra strong 0.375 wall thickness	120	1.55	2.82	3.85	4.76
	130	1.72	3.09	4.21	5.18
5 standard 0.258 wall thickness	120	1.71	2.97	4.00	4.90
	130	1.88	3.24	4.35	5.32
6 double extra strong 0.864 wall thickness	120	1.04	2.28	3.32	4.23
	130	1.19	2.60	3.68	4.67
6 extra strong 0.432 wall thickness	120	1.45	2.71	3.75	4.65
	130	1.62	2.99	4.10	5.08
6 standard 0.280 wall thickness	120	1.65	2.91	3.94	4.84
	130	1.82	3.19	4.30	5.27

For SI: 1 inch = 25.4 mm, 1 pound per cubic foot = 16.02 kg/m^3.

TABLE 722.5.1(7)
MINIMUM COVER (inch) FOR STEEL COLUMNS ENCASED IN NORMAL-WEIGHT CONCRETE[a] [FIGURE 722.5.1(6)(c)]

STRUCTURAL SHAPE	FIRE-RESISTANCE RATING (hours)				
	1	1 1/2	2	3	4
W14 × 233	1	1	1	1 1/2	2
× 176					2 1/2
× 132				2	
× 90			1 1/2		
× 61					3
× 48		1 1/2		2 1/2	
× 43					
W12 × 152	1	1	1	2	2 1/2
× 96					
× 65		1 1/2	1 1/2		3
× 50				2 1/2	
× 40					
W10 × 88	1	1 1/2	1 1/2	2	3
× 49	1			2 1/2	
× 45					
× 39					3 1/2
× 33			2		
W8 × 67	1	1	1 1/2	2 1/2	3
× 58					
× 48		1 1/2			3 1/2
× 31			2	3	
× 21					
× 18					4
W6 × 25	1	1 1/2	2	3	3 1/2
× 20		2	2 1/2		4
× 16				3 1/2	
× 15	1 1/2				
× 9					

For SI: 1 inch = 25.4 mm.

a. The tabulated thicknesses are based upon the assumed properties of normal-weight concrete given in Table 722.5.1(2).

TABLE 722.5.1(8)
MINIMUM COVER (inch) FOR STEEL COLUMNS ENCASED IN STRUCTURAL LIGHTWEIGHT CONCRETE[a] [FIGURE 722.5.1(6)(c)]

STRUCTURAL SHAPE	FIRE-RESISTANCE RATING (HOURS)				
	1	1 1/2	2	3	4
W14 × 233	1	1	1	1	1 1/2
× 193				1 1/2	
× 74					2
× 61					2 1/2
× 43			1 1/2	2	
W12 × 65	1	1	1	1 1/2	2
× 53				2	2 1/2
× 40			1 1/2		
W10 × 112	1	1	1	1 1/2	2
× 88					
× 60				2	2 1/2
× 33			1 1/2		
W8 × 35	1	1	1 1/2	2	2 1/2
× 28				2 1/2	3
× 24					
× 18		1 1/2			

For SI: 1 inch = 25.4 mm.

a. The tabulated thicknesses are based upon the assumed properties of structural lightweight concrete given in Table 722.5.1(2).

TABLE 722.5.1(9)
MINIMUM COVER (inch) FOR STEEL COLUMNS IN NORMAL-WEIGHT PRECAST COVERS[a] [FIGURE 722.5.1(6)(a)]

STRUCTURAL SHAPE	FIRE-RESISTANCE RATING (hours)				
	1	1 1/2	2	3	4
W14 × 233	1 1/2	1 1/2	1 1/2	2 1/2	3
× 211					3 1/2
× 176			2		
× 145				3	
× 109		2	2 1/2		
× 99					4
× 61				3 1/2	
× 43					4 1/2
W12 × 190	1 1/2	1 1/2	1 1/2	2 1/2	3 1/2
× 152			2		
× 120				3	4
× 96					
× 87		2	2 1/2	3 1/2	
× 58					4 1/2
× 40					
W10 × 112	1 1/2	1 1/2	2	3	3 1/2
× 88					4
× 77		2	2 1/2		
× 54				3 1/2	
× 33					4 1/2
W8 × 67	1 1/2	1 1/2	2	3	4
× 58		2	2 1/2	3 1/2	
× 48					
× 28					4 1/2
× 21		2 1/2	3		
× 18				4	
W6 × 25	1 1/2	2	2 1/2	3 1/2	4 1/2
× 20		2 1/2	3	4	
× 16					
× 12	2				
× 9					5

For SI: 1 inch = 25.4 mm.

a. The tabulated thicknesses are based upon the assumed properties of normal-weight concrete given in Table 722.5.1(2).

TABLE 722.5.1(10)
MINIMUM COVER (inch) FOR STEEL COLUMNS IN STRUCTURAL LIGHTWEIGHT PRECAST COVERS[a] [FIGURE 722.5.1(6)(a)]

STRUCTURAL SHAPE	FIRE-RESISTANCE RATING (hours)				
	1	1 1/2	2	3	4
W14 × 233	1 1/2	1 1/2	1 1/2	2	2 1/2
× 176					3
× 145				2 1/2	
× 132					
× 109					
× 99			2		
× 68					3 1/2
× 43				3	
W12 × 190	1 1/2	1 1/2	1 1/2	2	2 1/2
× 152					
× 136					3
× 106				2 1/2	
× 96					3 1/2
× 87					
× 65			2		
× 40				3	
W10 × 112	1 1/2	1 1/2	1 1/2	2	3
× 100				2 1/2	
× 88					
× 77			2		3 1/2
× 60					
× 39				3	
× 33		2			
W8 × 67	1 1/2	1 1/2	1 1/2	2 1/2	3
× 48			2	3	3 1/2
× 35					
× 28		2			
× 18			2 1/2		4
W6 × 25	1 1/2	2	2	3	3 1/2
× 15			2 1/2		4
× 9				3 1/2	

For SI: 1 inch = 25.4 mm.

a. The tabulated thicknesses are based upon the assumed properties of structural lightweight concrete given in Table 722.5.1(2).

722.5.2.3 Structural steel trusses. The *fire resistance* of structural steel trusses protected with fire-resistant materials sprayed to each of the individual truss elements shall be permitted to be determined in accordance with this section. The thickness of the fire-resistant material shall be determined in accordance with Section 722.5.1.3. The weight-to-heated-perimeter ratio (*W/D*) of truss elements that can be simultaneously exposed to fire on all sides shall be determined on the same basis as columns, as specified in Section 722.5.1.1. The weight-to-heated-perimeter ratio (*W/D*) of truss elements that directly support floor or roof assembly shall be determined on the same basis as beams and girders, as specified in Section 722.5.2.1.

The *fire resistance* of structural steel trusses protected with intumescent or mastic fire-resistant coatings shall be determined on the basis of fire-resistance tests in accordance with Section 703.2.

722.6 Wood assemblies. The provisions of this section contain procedures by which the *fire-resistance ratings* of wood assemblies are established by calculations.

722.6.1 General. This section contains procedures for calculating the *fire-resistance ratings* of walls, floor/ceiling and roof/ceiling assemblies based in part on the standard method of testing referenced in Section 703.2.

722.6.1.1 Maximum fire-resistance rating. *Fire-resistance ratings* calculated for assemblies using the methods in Section 722.6 shall be limited to a maximum of 1 hour.

722.6.1.2 Dissimilar membranes. Where dissimilar membranes are used on a wall assembly that requires consideration of fire exposure from both sides, the calculation shall be made from the least fire-resistant (weaker) side.

722.6.2 Walls, floors and roofs. These procedures apply to both load-bearing and nonload-bearing assemblies.

722.6.2.1 Fire-resistance rating of wood frame assemblies. The *fire-resistance rating* of a wood frame assembly is equal to the sum of the time assigned to the membrane on the fire-exposed side, the time assigned to the framing members and the time assigned for additional contribution by other protective measures such as insulation. The membrane on the unexposed side shall not be included in determining the *fire resistance* of the assembly.

722.6.2.2 Time assigned to membranes. Table 722.6.2(1) indicates the time assigned to membranes on the fire-exposed side.

722.6.2.3 Exterior walls. For an exterior wall with a *fire separation distance* greater than 10 feet (3048 mm), the wall is assigned a rating dependent on the interior membrane and the framing as described in Tables 722.6.2(1) and 722.6.2(2). The membrane on the outside of the nonfire-exposed side of exterior walls with a *fire separation distance* greater than 10 feet (3048 mm) shall consist of sheathing, sheathing paper and siding as described in Table 722.6.2(3).

722.6.2.4 Floors and roofs. In the case of a floor or roof, the standard test provides only for testing for fire exposure from below. Except as noted in Section 703.3, Item 5, floor or roof assemblies of wood framing shall have an upper membrane consisting of a subfloor and finished floor conforming to Table 722.6.2(4) or any other membrane that has a contribution to *fire resistance* of not less than 15 minutes in Table 722.6.2(1).

722.6.2.5 Additional protection. Table 722.6.2(5) indicates the time increments to be added to the *fire resistance* where glass fiber, rockwool, slag mineral wool or cellulose insulation is incorporated in the assembly.

722.6.2.6 Fastening. Fastening of wood frame assemblies and the fastening of membranes to the wood framing members shall be done in accordance with Chapter 23.

TABLE 722.6.2(1)
TIME ASSIGNED TO WALLBOARD MEMBRANES[a, b, c, d]

DESCRIPTION OF FINISH	TIME[e] (minutes)
$^{3}/_{8}$-inch wood structural panel bonded with exterior glue	5
$^{15}/_{32}$-inch wood structural panel bonded with exterior glue	10
$^{19}/_{32}$-inch wood structural panel bonded with exterior glue	15
$^{3}/_{8}$-inch gypsum wallboard	10
$^{1}/_{2}$-inch gypsum wallboard	15
$^{5}/_{8}$-inch gypsum wallboard	30
$^{1}/_{2}$-inch Type X gypsum wallboard	25
$^{5}/_{8}$-inch Type X gypsum wallboard	40
Double $^{3}/_{8}$-inch gypsum wallboard	25
$^{1}/_{2}$-inch + $^{3}/_{8}$-inch gypsum wallboard	35
Double $^{1}/_{2}$-inch gypsum wallboard	40

For SI: 1 inch = 25.4 mm.

a. These values apply only where membranes are installed on framing members that are spaced 16 inches o.c. or less.

b. Gypsum wallboard installed over framing or furring shall be installed so that all edges are supported, except $^{5}/_{8}$-inch Type X gypsum wallboard shall be permitted to be installed horizontally with the horizontal joints staggered 24 inches each side and unsupported but finished.

c. On wood frame floor/ceiling or roof/ceiling assemblies, gypsum board shall be installed with the long dimension perpendicular to framing members and shall have all joints finished.

d. The membrane on the unexposed side shall not be included in determining the fire resistance of the assembly. Where dissimilar membranes are used on a wall assembly, the calculation shall be made from the least fire-resistant (weaker) side.

e. The time assigned is not a finished rating.

TABLE 722.6.2(2)
TIME ASSIGNED FOR CONTRIBUTION OF WOOD FRAME [a, b, c]

DESCRIPTION	TIME ASSIGNED TO FRAME (minutes)
Wood studs 16 inches o.c.	20
Wood floor and roof joists 16 inches o.c.	10

For SI: 1 inch = 25.4 mm.
a. This table does not apply to studs or joists spaced more than 16 inches o.c.
b. All studs shall be nominal 2 × 4 and all joists shall have a nominal thickness of not less than 2 inches.
c. Allowable spans for joists shall be determined in accordance with Sections 2308.4.2.1, 2308.7.1 and 2308.7.2.

TABLE 722.6.2(3)
MEMBRANE[a] ON EXTERIOR FACE OF WOOD STUD WALLS

SHEATHING	PAPER	EXTERIOR FINISH
$^5/_8$-inch T & G lumber $^5/_{16}$-inch exterior glue wood structural panel $^1/_2$-inch gypsum wallboard $^5/_8$-inch gypsum wallboard $^1/_2$-inch fiberboard	Sheathing paper	Lumber siding Wood shingles and shakes $^1/_4$-inch fiber-cement lap, panel or shingle siding $^1/_4$-inch wood structural panels-exterior type $^1/_4$-inch hardboard Metal siding Stucco on metal lath Masonry veneer Vinyl siding
None	—	$^3/_8$-inch exterior-grade wood structural panels

For SI: 1 inch = 25.4 mm.
a. Any combination of sheathing, paper and exterior finish is permitted.

TABLE 722.6.2(4)
FLOORING OR ROOFING OVER WOOD FRAMING[a]

ASSEMBLY	STRUCTURAL MEMBERS	SUBFLOOR OR ROOF DECK	FINISHED FLOORING OR ROOFING
Floor	Wood	$^{15}/_{32}$-inch wood structural panels or $^{11}/_{16}$-inch T & G softwood	Hardwood or softwood flooring on building paper resilient flooring, parquet floor felted-synthetic fiber floor coverings, carpeting, or ceramic tile on $^1/_4$-inch-thick fiber-cement underlayment or $^3/_8$-inch-thick panel-type underlay Ceramic tile on $1^1/_4$-inch mortar bed
Roof	Wood	$^{15}/_{32}$-inch wood structural panels or $^{11}/_{16}$-inch T & G softwood	Finished roofing material with or without insulation

For SI: 1 inch = 25.4 mm.
a. This table applies only to wood joist construction. It is not applicable to wood truss construction.

TABLE 722.6.2(5)
TIME ASSIGNED FOR ADDITIONAL PROTECTION

DESCRIPTION OF ADDITIONAL PROTECTION	FIRE RESISTANCE (minutes)
Add to the *fire-resistance rating* of wood stud walls if the spaces between the studs are completely filled with glass fiber mineral wool batts weighing not less than 2 pounds per cubic foot (0.6 pound per square foot of wall surface) or rockwool or slag material wool batts weighing not less than 3.3 pounds per cubic foot (1 pound per square foot of wall surface), or cellulose insulation having a nominal density not less than 2.6 pounds per cubic foot.	15

For SI: 1 pound/cubic foot = 16.0185 kg/m^3.

CHAPTER 8

INTERIOR FINISHES

User note: Code change proposals to sections preceded by the designation [F] will be considered by the International Fire Code Development Committee during the 2016 (Group B) Code Development Cycle. See explanation on page iv.

SECTION 801
GENERAL

801.1 Scope. The provisions of this chapter shall govern the use of materials used as *interior finishes*, *trim* and *decorative materials*.

801.2 Interior wall and ceiling finish. The provisions of Section 803 shall limit the allowable fire performance and smoke development of *interior wall and ceiling finish* materials based on occupancy classification.

801.3 Interior floor finish. The provisions of Section 804 shall limit the allowable fire performance of *interior floor finish* materials based on occupancy classification.

[F] 801.4 Decorative materials and trim. *Decorative materials* and *trim* shall be restricted by combustibility, fire performance or flame propagation performance criteria in accordance with Section 806.

801.5 Applicability. For buildings in flood hazard areas as established in Section 1612.3, *interior finishes*, *trim* and *decorative materials* below the elevation required by Section 1612 shall be flood-damage-resistant materials.

801.6 Application. Combustible materials shall be permitted to be used as finish for walls, ceilings, floors and other interior surfaces of buildings.

801.7 Windows. Show windows in the exterior walls of the first *story* above grade plane shall be permitted to be of wood or of unprotected metal framing.

801.8 Foam plastics. Foam plastics shall not be used as *interior finish* except as provided in Section 803.4. Foam plastics shall not be used as interior *trim* except as provided in Section 806.5 or 2604.2. This section shall apply both to exposed foam plastics and to foam plastics used in conjunction with a textile or vinyl facing or cover.

SECTION 802
DEFINITIONS

802.1 Definitions. The following terms are defined in Chapter 2:

EXPANDED VINYL WALL COVERING.

FLAME SPREAD.

FLAME SPREAD INDEX.

INTERIOR FINISH.

INTERIOR FLOOR FINISH.

INTERIOR FLOOR-WALL BASE.

INTERIOR WALL AND CEILING FINISH.

SITE-FABRICATED STRETCH SYSTEM.

SMOKE-DEVELOPED INDEX.

TRIM.

SECTION 803
WALL AND CEILING FINISHES

803.1 General. *Interior wall and ceiling finish* materials shall be classified for fire performance and smoke development in accordance with Section 803.1.1 or 803.1.2, except as shown in Sections 803.2 through 803.13. Materials tested in accordance with Section 803.1.2 shall not be required to be tested in accordance with Section 803.1.1.

803.1.1 Interior wall and ceiling finish materials. Interior wall and ceiling finish materials shall be classified in accordance with ASTM E 84 or UL 723. Such *interior finish* materials shall be grouped in the following classes in accordance with their flame spread and *smoke-developed indexes*.

Class A: = Flame spread index 0-25; smoke-developed index 0-450.

Class B: = Flame spread index 26-75; smoke-developed index 0-450.

Class C: = Flame spread index 76-200; smoke-developed index 0-450.

Exception: Materials tested in accordance with Section 803.1.2.

803.1.2 Room corner test for interior wall or ceiling finish materials. *Interior wall or ceiling finish* materials shall be permitted to be tested in accordance with NFPA 286. Interior wall or ceiling finish materials tested in accordance with NFPA 286 shall comply with Section 803.1.2.1.

803.1.2.1 Acceptance criteria for NFPA 286. The interior finish shall comply with the following:

1. During the 40 kW exposure, flames shall not spread to the ceiling.
2. The flame shall not spread to the outer extremity of the sample on any wall or ceiling.
3. Flashover, as defined in NFPA 286, shall not occur.
4. The peak heat release rate throughout the test shall not exceed 800 kW.
5. The total smoke released throughout the test shall not exceed 1,000 m^2.

803.1.3 Room corner test for textile wall coverings and expanded vinyl wall coverings. Textile wall coverings and expanded vinyl wall coverings shall meet the criteria of Section 803.1.3.1 when tested in the manner intended for use in accordance with the Method B protocol of NFPA 265 using the product-mounting system, including adhesive.

803.1.3.1 Acceptance criteria for NFPA 265. The interior finish shall comply with the following:

1. During the 40 kW exposure, flames shall not spread to the ceiling.
2. The flame shall not spread to the outer extremities of the samples on the 8-foot by 12-foot (203 by 305 mm) walls.
3. Flashover, as defined in NFPA 265, shall not occur.
4. The total smoke released throughout the test shall not exceed 1,000 m^2.

803.1.4 Acceptance criteria for textile and expanded vinyl wall or ceiling coverings tested to ASTM E 84 or UL 723. Textile wall and ceiling coverings and expanded vinyl wall and ceiling coverings shall have a Class A flame spread index in accordance with ASTM E 84 or UL 723 and be protected by an *automatic sprinkler system* installed in accordance with Section 903.3.1.1 or 903.3.1.2. Test specimen preparation and mounting shall be in accordance with ASTM E 2404.

803.2 Thickness exemption. Materials having a thickness less than 0.036 inch (0.9 mm) applied directly to the surface of walls or ceilings shall not be required to be tested.

803.3 Heavy timber exemption. Exposed portions of building elements complying with the requirements for buildings of Type IV construction in Section 602.4 shall not be subject to *interior finish* requirements.

803.4 Foam plastics. Foam plastics shall not be used as *interior finish* except as provided in Section 2603.9. This section shall apply both to exposed foam plastics and to foam plastics used in conjunction with a textile or vinyl facing or cover.

803.5 Textile wall coverings. Where used as interior wall finish materials, textile wall coverings, including materials having woven or nonwoven, napped, tufted, looped or similar surface and carpet and similar textile materials, shall be tested in the manner intended for use, using the product mounting system, including adhesive, and shall comply with the requirements of Section 803.1.2, 803.1.3 or 803.1.4.

803.6 Textile ceiling coverings. Where used as interior ceiling finish materials, textile ceiling coverings, including materials having woven or nonwoven, napped, tufted, looped or similar surface and carpet and similar textile materials, shall be tested in the manner intended for use, using the product mounting system, including adhesive, and shall comply with the requirements of Section 803.1.2 or 803.1.4.

803.7 Expanded vinyl wall coverings. Where used as interior wall finish materials, expanded vinyl wall coverings shall be tested in the manner intended for use, using the product mounting system, including adhesive, and shall comply with the requirements of Section 803.1.2, 803.1.3 or 803.1.4.

803.8 Expanded vinyl ceiling coverings. Where used as interior ceiling finish materials, expanded vinyl ceiling coverings shall be tested in the manner intended for use, using the product mounting system, including adhesive, and shall comply with the requirements of Section 803.1.2 or 803.1.4.

803.9 High-density polyethylene (HDPE) and polypropylene (PP). Where high-density polyethylene or polypropylene is used as an interior finish it shall comply with Section 803.1.2.

803.10 Site-fabricated stretch systems. Where used as interior wall or interior ceiling finish materials, site-fabricated stretch systems containing all three components described in the definition in Chapter 2 shall be tested in the manner intended for use, and shall comply with the requirements of Section 803.1.1 or 803.1.2. If the materials are tested in accordance with ASTM E 84 or UL 723, specimen preparation and mounting shall be in accordance with ASTM E 2573.

803.11 Interior finish requirements based on group. *Interior wall and ceiling finish* shall have a flame spread index not greater than that specified in Table 803.11 for the group and location designated. *Interior wall and ceiling finish* materials tested in accordance with NFPA 286 and meeting the acceptance criteria of Section 803.1.2.1, shall be permitted to be used where a Class A classification in accordance with ASTM E 84 or UL 723 is required.

803.12 Stability. *Interior finish* materials regulated by this chapter shall be applied or otherwise fastened in such a manner that such materials will not readily become detached where subjected to room temperatures of 200°F (93°C) for not less than 30 minutes.

803.13 Application of interior finish materials to fire-resistance-rated or noncombustible building elements. Where *interior finish* materials are applied on walls, ceilings or structural elements required to have a *fire-resistance rating* or to be of noncombustible construction, these finish materials shall comply with the provisions of this section.

803.13.1 Direct attachment and furred construction. Where walls and ceilings are required by any provision in this code to be of fire-resistance-rated or noncombustible construction, the *interior finish* material shall be applied directly against such construction or to furring strips not exceeding $1^3/_4$ inches (44 mm), applied directly against such surfaces.

803.13.1.1 Furred construction. If the interior finish material is applied to furring strips, the intervening spaces between such furring strips shall comply with one of the following:

1. Be filled with material that is inorganic or noncombustible;
2. Be filled with material that meets the requirements of a Class A material in accordance with Section 803.1.1 or 803.1.2; or
3. Be fireblocked at a maximum of 8 feet (2438 mm) in every direction in accordance with Section 718.

TABLE 803.11
INTERIOR WALL AND CEILING FINISH REQUIREMENTS BY OCCUPANCY[k]

GROUP	SPRINKLERED[l]			NONSPRINKLERED		
	Interior exit stairways, interior exit ramps and exit passageways[a, b]	Corridors and enclosure for exit access stairways and exit access ramps	Rooms and enclosed spaces[c]	Interior exit stairways, interior exit ramps and exit passageways[a, b]	Corridors and enclosure for exit access stairways and exit access ramps	Rooms and enclosed spaces[c]
A-1 & A-2	B	B	C	A	A[d]	B[e]
A-3[f], A-4, A-5	B	B	C	A	A[d]	C
B, E, M, R-1	B	C	C	A	B	C
R-4	B	C	C	A	B	B
F	C	C	C	B	C	C
H	B	B	C[g]	A	A	B
I-1	B	C	C	A	B	B
I-2	B	B	B[h, i]	A	A	B
I-3	A	A[j]	C	A	A	B
I-4	B	B	B[h, i]	A	A	B
R-2	C	C	C	B	B	C
R-3	C	C	C	C	C	C
S	C	C	C	B	B	C
U	No restrictions			No restrictions		

For SI: 1 inch = 25.4 mm, 1 square foot = 0.0929m^2.

a. Class C interior finish materials shall be permitted for wainscotting or paneling of not more than 1,000 square feet of applied surface area in the grade lobby where applied directly to a noncombustible base or over furring strips applied to a noncombustible base and fireblocked as required by Section 803.13.1.

b. In other than Group I-3 occupancies in buildings less than three stories above grade plane, Class B interior finish for nonsprinklered buildings and Class C interior finish for sprinklered buildings shall be permitted in interior exit stairways and ramps.

c. Requirements for rooms and enclosed spaces shall be based upon spaces enclosed by partitions. Where a fire-resistance rating is required for structural elements, the enclosing partitions shall extend from the floor to the ceiling. Partitions that do not comply with this shall be considered enclosing spaces and the rooms or spaces on both sides shall be considered one. In determining the applicable requirements for rooms and enclosed spaces, the specific occupancy thereof shall be the governing factor regardless of the group classification of the building or structure.

d. Lobby areas in Group A-1, A-2 and A-3 occupancies shall not be less than Class B materials.

e. Class C interior finish materials shall be permitted in places of assembly with an occupant load of 300 persons or less.

f. For places of religious worship, wood used for ornamental purposes, trusses, paneling or chancel furnishing shall be permitted.

g. Class B material is required where the building exceeds two stories.

h. Class C interior finish materials shall be permitted in administrative spaces.

i. Class C interior finish materials shall be permitted in rooms with a capacity of four persons or less.

j. Class B materials shall be permitted as wainscotting extending not more than 48 inches above the finished floor in corridors and exit access stairways and ramps.

k. Finish materials as provided for in other sections of this code.

l. Applies when protected by an automatic sprinkler system installed in accordance with Section 903.3.1.1 or 903.3.1.2.

803.13.2 Set-out construction. Where walls and ceilings are required to be of fire-resistance-rated or noncombustible construction and walls are set out or ceilings are dropped distances greater than specified in Section 803.13.1, Class A finish materials, in accordance with Section 803.1.1 or 803.1.2, shall be used.

Exceptions:

1. Where *interior finish* materials are protected on both sides by an *automatic sprinkler system* in accordance with Section 903.3.1.1 or 903.3.1.2.
2. Where *interior finish* materials are attached to noncombustible backing or furring strips installed as specified in Section 803.13.1.1.

803.13.2.1 Hangers and assembly members. The hangers and assembly members of such dropped ceilings that are below the horizontal fire-resistance-rated floor or roof assemblies shall be of noncombustible materials. The construction of each set-out wall and horizontal fire-resistance-rated floor or roof assembly shall be of fire-resistance-rated construction as required elsewhere in this code.

Exception: In Type III and V construction, *fire-retardant-treated wood* shall be permitted for use as hangers and assembly members of dropped ceilings.

803.13.3 Heavy timber construction. Wall and ceiling finishes of all classes as permitted in this chapter that are installed directly against the wood decking or planking of Type IV construction or to wood furring strips applied directly to the wood decking or planking shall be fireblocked as specified in Section 803.13.1.1.

803.13.4 Materials. An interior wall or ceiling finish material that is not more than $^1/_4$ inch (6.4 mm) thick shall

be applied directly onto the wall, ceiling or structural element without the use of furring strips and shall not be suspended away from the building element to which that finish material it is applied.

Exceptions:

1. Noncombustible interior finish materials.
2. Materials that meet the requirements of Class A materials in accordance with Section 803.1.1 or 803.1.2 where the qualifying tests were made with the material furred out from the noncombustible backing shall be permitted to be used with furring strips.
3. Materials that meet the requirements of Class A materials in accordance with Section 803.1.1 or 803.1.2 where the qualifying tests were made with the material suspended away from the noncombustible backing shall be permitted to be used suspended away from the building element.

SECTION 804
INTERIOR FLOOR FINISH

804.1 General. *Interior floor finish* and floor covering materials shall comply with Sections 804.2 through 804.4.2.

Exception: Floor finishes and coverings of a traditional type, such as wood, vinyl, linoleum or terrazzo, and resilient floor covering materials that are not comprised of fibers.

804.2 Classification. *Interior floor finish* and floor covering materials required by Section 804.4.2 to be of Class I or II materials shall be classified in accordance with NFPA 253. The classification referred to herein corresponds to the classifications determined by NFPA 253 as follows: Class I, 0.45 watts/cm^2 or greater; Class II, 0.22 watts/cm^2 or greater.

804.3 Testing and identification. *Interior floor finish* and floor covering materials shall be tested by an agency in accordance with NFPA 253 and identified by a hang tag or other suitable method so as to identify the manufacturer or supplier and style, and shall indicate the *interior floor finish* or floor covering classification in accordance with Section 804.2. Carpet-type floor coverings shall be tested as proposed for use, including underlayment. Test reports confirming the information provided in the manufacturer's product identification shall be furnished to the building official upon request.

804.4 Interior floor finish requirements. Interior floor covering materials shall comply with Sections 804.4.1 and 804.4.2 and interior floor finish materials shall comply with Section 804.4.2.

804.4.1 Test requirement. In all occupancies, interior floor covering materials shall comply with the requirements of the DOC FF-1 "pill test" (CPSC 16 CFR Part 1630) or with ASTM D 2859.

804.4.2 Minimum critical radiant flux. In all occupancies, interior floor finish and floor covering materials in enclosures for stairways and ramps, exit passageways, corridors and rooms or spaces not separated from corridors by partitions extending from the floor to the underside of the ceiling shall withstand a minimum critical radiant flux. The minimum critical radiant flux shall be not less than Class I in Groups I-1, I-2 and I-3 and not less than Class II in Groups A, B, E, H, I-4, M, R-1, R-2 and S.

Exception: Where a building is equipped throughout with an automatic sprinkler system in accordance with Section 903.3.1.1 or 903.3.1.2, Class II materials are permitted in any area where Class I materials are required, and materials complying with DOC FF-1 "pill test" (CPSC 16 CFR Part 1630) or with ASTM D 2859 are permitted in any area where Class II materials are required.

SECTION 805
COMBUSTIBLE MATERIALS IN TYPES I AND II CONSTRUCTION

805.1 Application. Combustible materials installed on or embedded in floors of buildings of Type I or II construction shall comply with Sections 805.1.1 through 805.1.3.

Exception: Stages and platforms constructed in accordance with Sections 410.3 and 410.4, respectively.

805.1.1 Subfloor construction. Floor sleepers, bucks and nailing blocks shall not be constructed of combustible materials, unless the space between the fire-resistance-rated floor assembly and the flooring is either solidly filled with noncombustible materials or fireblocked in accordance with Section 718, and provided that such open spaces shall not extend under or through permanent partitions or walls.

805.1.2 Wood finish flooring. Wood finish flooring is permitted to be attached directly to the embedded or fireblocked wood sleepers and shall be permitted where cemented directly to the top surface of fire-resistance-rated floor assemblies or directly to a wood subfloor attached to sleepers as provided for in Section 805.1.1.

805.1.3 Insulating boards. Combustible insulating boards not more than $^1/_2$ inch (12.7 mm) thick and covered with finish flooring are permitted where attached directly to a noncombustible floor assembly or to wood subflooring attached to sleepers as provided for in Section 805.1.1.

SECTION 806
DECORATIVE MATERIALS AND TRIM

[F] 806.1 General. Combustible decorative materials, other than decorative vegetation, shall comply with Sections 806.2 through 806.8.

[F] 806.2 Noncombustible materials. The permissible amount of noncombustible materials shall not be limited.

[F] 806.3 Combustible decorative materials. In other than Group I-3, curtains, draperies, fabric hangings and similar combustible decorative materials suspended from walls or ceilings shall comply with Section 807.4 and shall not exceed 10 percent of the specific wall or ceiling area to which such materials are attached.

Fixed or movable walls and partitions, paneling, wall pads and crash pads applied structurally or for decoration, acoustical correction, surface insulation or other purposes shall be considered *interior finish* shall comply with Section 803 and shall not be considered *decorative materials* or furnishings.

Exceptions:

1. In auditoriums in Group A, the permissible amount of curtains, draperies, fabric hangings and similar combustible decorative materials suspended from walls or ceilings shall not exceed 75 percent of the aggregate wall area where the building is equipped throughout with an *approved automatic sprinkler system* in accordance with Section 903.3.1.1, and where the material is installed in accordance with Section 803.13 of this code.
2. In Group R-2 dormitories, within sleeping units and dwelling units, the permissible amount of curtains, draperies, fabric hangings and similar decorative materials suspended from walls or ceiling shall not exceed 50 percent of the aggregate wall areas where the building is equipped throughout with an *approved automatic sprinkler system* installed in accordance with Section 903.3.1.
3. In Group B and M occupancies, the amount of combustible fabric partitions suspended from the ceiling and not supported by the floor shall comply with Section 806.4 and shall not be limited.

[F] 806.4 Acceptance criteria and reports. Where required to exhibit improved fire performance, curtains, draperies, fabric hangings and similar combustible decorative materials suspended from walls or ceilings shall be tested by an *approved agency* and meet the flame propagation performance criteria of Test 1 or 2, as appropriate, of NFPA 701, or exhibit a maximum heat release rate of 100 kW when tested in accordance with NFPA 289, using the 20 kW ignition source. Reports of test results shall be prepared in accordance with the test method used and furnished to the *building official* upon request.

[F] 806.5 Foam plastic. Foam plastic used as *trim* in any occupancy shall comply with Section 2604.2.

[F] 806.6 Pyroxylin plastic. Imitation leather or other material consisting of or coated with a pyroxylin or similarly hazardous base shall not be used in Group A occupancies.

[F] 806.7 Interior trim. Material, other than foam plastic used as interior *trim*, shall have a minimum Class C flame spread and smoke-developed index when tested in accordance with ASTM E 84 or UL 723, as described in Section 803.1.1. Combustible *trim*, excluding handrails and guardrails, shall not exceed 10 percent of the specific wall or ceiling area in which it is attached.

[F] 806.8 Interior floor-wall base. *Interior floor-wall base* that is 6 inches (152 mm) or less in height shall be tested in accordance with Section 804.2 and shall be not less than Class II. Where a Class I floor finish is required, the floor-wall base shall be Class I.

Exception: Interior *trim* materials that comply with Section 806.7.

SECTION 807
INSULATION

807.1 Insulation. Thermal and acoustical insulation shall comply with Section 720.

SECTION 808
ACOUSTICAL CEILING SYSTEMS

808.1 Acoustical ceiling systems. The quality, design, fabrication and erection of metal suspension systems for acoustical tile and lay-in panel ceilings in buildings or structures shall conform to generally accepted engineering practice, the provisions of this chapter and other applicable requirements of this code.

808.1.1 Materials and installation. Acoustical materials complying with the *interior finish* requirements of Section 803 shall be installed in accordance with the manufacturer's recommendations and applicable provisions for applying *interior finish.*

808.1.1.1 Suspended acoustical ceilings. Suspended acoustical ceiling systems shall be installed in accordance with the provisions of ASTM C 635 and ASTM C 636.

808.1.1.2 Fire-resistance-rated construction. Acoustical ceiling systems that are part of fire-resistance-rated construction shall be installed in the same manner used in the assembly tested and shall comply with the provisions of Chapter 7.

CHAPTER 9

FIRE PROTECTION SYSTEMS

User note: Code change proposals to sections preceded by the designation [F] will be considered by the International Fire Code Development Committee during the 2016 (Group B) Code Development Cycle. See explanation on page iv.

SECTION 901
GENERAL

901.1 Scope. The provisions of this chapter shall specify where *fire protection systems* are required and shall apply to the design, installation and operation of *fire protection systems*.

901.2 Fire protection systems. *Fire protection systems* shall be installed, repaired, operated and maintained in accordance with this code and the *International Fire Code*.

Any *fire protection system* for which an exception or reduction to the provisions of this code has been granted shall be considered to be a required system.

Exception: Any *fire protection system* or portion thereof not required by this code shall be permitted to be installed for partial or complete protection provided that such system meets the requirements of this code.

901.3 Modifications. Persons shall not remove or modify any *fire protection system* installed or maintained under the provisions of this code or the *International Fire Code* without approval by the *building official*.

901.4 Threads. Threads provided for fire department connections to sprinkler systems, standpipes, yard hydrants or any other fire hose connection shall be compatible with the connections used by the local fire department.

901.5 Acceptance tests. *Fire protection systems* shall be tested in accordance with the requirements of this code and the *International Fire Code*. When required, the tests shall be conducted in the presence of the *building official*. Tests required by this code, the *International Fire Code* and the standards listed in this code shall be conducted at the expense of the owner or the owner's authorized agent. It shall be unlawful to occupy portions of a structure until the required *fire protection systems* within that portion of the structure have been tested and *approved*.

901.6 Supervisory service. Where required, *fire protection systems* shall be monitored by an approved supervising station in accordance with NFPA 72.

901.6.1 Automatic sprinkler systems. *Automatic sprinkler systems* shall be monitored by an *approved* supervising station.

Exceptions:

1. A supervising station is not required for *automatic sprinkler systems* protecting one- and two-family dwellings.
2. Limited area systems serving fewer than 20 sprinklers.

901.6.2 Fire alarm systems. Fire alarm systems required by the provisions of Section 907.2 of this code and Sections 907.2 and 907.9 of the *International Fire Code* shall be monitored by an *approved* supervising station in accordance with Section 907.6.6.

Exceptions:

1. Single- and multiple-station smoke alarms required by Section 907.2.11.
2. Smoke detectors in Group I-3 occupancies.
3. Supervisory service is not required for *automatic sprinkler systems* in one- and two-family dwellings.

901.6.3 Group H. Supervision and monitoring of emergency alarm, detection and automatic fire-extinguishing systems in Group H occupancies shall be in accordance with the *International Fire Code*.

901.7 Fire areas. Where buildings, or portions thereof, are divided into *fire areas* so as not to exceed the limits established for requiring a *fire protection system* in accordance with this chapter, such *fire areas* shall be separated by *fire barriers* constructed in accordance with Section 707 or *horizontal assemblies* constructed in accordance with Section 711, or both, having a *fire-resistance rating* of not less than that determined in accordance with Section 707.3.10.

[F] 901.8 Pump and riser room size. Where provided, fire pump rooms and *automatic sprinkler system* riser rooms shall be designed with adequate space for all equipment necessary for the installation, as defined by the manufacturer, with sufficient working room around the stationary equipment. Clearances around equipment to elements of permanent construction, including other installed equipment and appliances, shall be sufficient to allow inspection, service, repair or replacement without removing such elements of permanent construction or disabling the function of a required fire-resistance-rated assembly. Fire pump and *automatic sprinkler system* riser rooms shall be provided with a door(s) and unobstructed passageway large enough to allow removal of the largest piece of equipment.

SECTION 902
DEFINITIONS

902.1 Definitions. The following terms are defined in Chapter 2:

[F] ALARM NOTIFICATION APPLIANCE.

[F] ALARM SIGNAL.

[F] ALARM VERIFICATION FEATURE.

[F] ANNUNCIATOR.
[F] AUDIBLE ALARM NOTIFICATION APPLIANCE.
[F] AUTOMATIC.
[F] AUTOMATIC FIRE-EXTINGUISHING SYSTEM.
[F] AUTOMATIC SMOKE DETECTION SYSTEM.
[F] AUTOMATIC SPRINKLER SYSTEM.
[F] AUTOMATIC WATER MIST SYSTEM.
[F] AVERAGE AMBIENT SOUND LEVEL.
[F] CARBON DIOXIDE EXTINGUISHING SYSTEMS.
[F] CEILING LIMIT.
[F] CLEAN AGENT.
[F] COMMERCIAL MOTOR VEHICLE.
[F] CONSTANTLY ATTENDED LOCATION.
[F] DELUGE SYSTEM.
[F] DETECTOR, HEAT.
[F] DRY-CHEMICAL EXTINGUISHING AGENT.
[F] ELECTRICAL CIRCUIT PROTECTIVE SYSTEM.
[F] ELEVATOR GROUP.
[F] EMERGENCY ALARM SYSTEM.
[F] EMERGENCY VOICE/ALARM COMMUNICATIONS.
[F] FIRE ALARM BOX, MANUAL.
[F] FIRE ALARM CONTROL UNIT.
[F] FIRE ALARM SIGNAL.
[F] FIRE ALARM SYSTEM.
FIRE AREA.
[F] FIRE COMMAND CENTER.
[F] FIRE DETECTOR, AUTOMATIC.
[F] FIRE PROTECTION SYSTEM.
[F] FIRE SAFETY FUNCTIONS.
[F] FOAM-EXTINGUISHING SYSTEM.
[F] HALOGENATED EXTINGUISHING SYSTEM.
[F] INITIATING DEVICE.
[F] MANUAL FIRE ALARM BOX.
[F] MULTIPLE-STATION ALARM DEVICE.
[F] MULTIPLE-STATION SMOKE ALARM.
[F] NOTIFICATION ZONE.
[F] NUISANCE ALARM.
PRIVATE GARAGE.
[F] RECORD DRAWINGS.
[F] SINGLE-STATION SMOKE ALARM.
[F] SMOKE ALARM.
[F] SMOKE DETECTOR.
[F] SMOKEPROOF ENCLOSURE.
[F] STANDPIPE SYSTEM, CLASSES OF.
Class I system.
Class II system.
Class III system.
[F] STANDPIPE, TYPES OF.
Automatic dry.
Automatic wet.
Manual dry.
Manual wet.
Semiautomatic dry.
[F] SUPERVISING STATION.
[F] SUPERVISORY SERVICE.
[F] SUPERVISORY SIGNAL.
[F] SUPERVISORY SIGNAL-INITIATING DEVICE.
[F] TIRES, BULK STORAGE OF.
[F] TROUBLE SIGNAL.
[F] VISIBLE ALARM NOTIFICATION APPLIANCE.
[F] WET CHEMICAL EXTINGUISHING SYSTEM.
[F] WIRELESS PROTECTION SYSTEM.
[F] ZONE.
[F] ZONE, NOTIFICATION.

SECTION 903
AUTOMATIC SPRINKLER SYSTEMS

[F] 903.1 General. *Automatic sprinkler systems* shall comply with this section.

[F] 903.1.1 Alternative protection. Alternative *automatic fire-extinguishing systems* complying with Section 904 shall be permitted instead of automatic sprinkler protection where recognized by the applicable standard and *approved* by the fire code official.

[F] 903.2 Where required. Approved *automatic sprinkler systems* in new buildings and structures shall be provided in the locations described in Sections 903.2.1 through 903.2.12.

Exception: Spaces or areas in telecommunications buildings used exclusively for telecommunications equipment, associated electrical power distribution equipment, batteries and standby engines, provided those spaces or areas are equipped throughout with an *automatic smoke detection system* in accordance with Section 907.2 and are separated from the remainder of the building by not less than 1-hour *fire barriers* constructed in accordance with Section 707 or not less than 2-hour *horizontal assemblies* constructed in accordance with Section 711, or both.

[F] 903.2.1 Group A. An *automatic sprinkler system* shall be provided throughout buildings and portions thereof used as Group A occupancies as provided in this section. For Group A-1, A-2, A-3 and A-4 occupancies, the *automatic sprinkler system* shall be provided throughout the story where the *fire area* containing the Group A-1, A-2,

A-3 or A-4 occupancy is located, and throughout all stories from the Group A occupancy to, and including, the *levels of exit discharge* serving the Group A occupancy. For Group A-5 occupancies, the *automatic sprinkler system* shall be provided in the spaces indicated in Section 903.2.1.5.

[F] 903.2.1.1 Group A-1. An *automatic sprinkler system* shall be provided for *fire areas* containing Group A-1 occupancies and intervening floors of the building where one of the following conditions exists:

1. The *fire area* exceeds 12,000 square feet (1115 m^2).
2. The *fire area* has an *occupant load* of 300 or more.
3. The *fire area* is located on a floor other than a *level of exit discharge* serving such occupancies.
4. The *fire area* contains a multitheater complex.

[F] 903.2.1.2 Group A-2. An *automatic sprinkler system* shall be provided for *fire areas* containing Group A-2 occupancies and intervening floors of the building where one of the following conditions exists:

1. The *fire area* exceeds 5,000 square feet (464.5 m^2).
2. The *fire area* has an *occupant load* of 100 or more.
3. The *fire area* is located on a floor other than a *level of exit discharge* serving such occupancies.

[F] 903.2.1.3 Group A-3. An *automatic sprinkler system* shall be provided for *fire areas* containing Group A-3 occupancies and intervening floors of the building where one of the following conditions exists:

1. The *fire area* exceeds 12,000 square feet (1115 m^2).
2. The *fire area* has an *occupant load* of 300 or more.
3. The *fire area* is located on a floor other than a *level of exit discharge* serving such occupancies.

[F] 903.2.1.4 Group A-4. An *automatic sprinkler system* shall be provided for *fire areas* containing Group A-4 occupancies and intervening floors of the building where one of the following conditions exists:

1. The *fire area* exceeds 12,000 square feet (1115 m^2).
2. The *fire area* has an *occupant load* of 300 or more.
3. The *fire area* is located on a floor other than a *level of exit discharge* serving such occupancies.

[F] 903.2.1.5 Group A-5. An *automatic sprinkler system* shall be provided for Group A-5 occupancies in the following areas: concession stands, retail areas, press boxes and other accessory use areas in excess of 1,000 square feet (93 m^2).

[F] 903.2.1.6 Assembly occupancies on roofs. Where an occupied roof has an assembly occupancy with an *occupant load* exceeding 100 for Group A-2 and 300 for other Group A occupancies, all floors between the occupied roof and the *level of exit discharge* shall be equipped with an *automatic sprinkler system* in accordance with Section 903.3.1.1 or 903.3.1.2.

Exception: Open parking garages of Type I or Type II construction.

903.2.1.7 Multiple fire areas. An *automatic sprinkler system* shall be provided where multiple fire areas of Group A-1, A-2, A-3 or A-4 occupancies share exit or exit access components and the combined *occupant load* of theses fire areas is 300 or more.

[F] 903.2.2 Ambulatory care facilities. An *automatic sprinkler system* shall be installed throughout the entire floor containing an *ambulatory care facility* where either of the following conditions exist at any time:

1. Four or more care recipients are incapable of self-preservation, whether rendered incapable by staff or staff has accepted responsibility for care recipients already incapable.
2. One or more care recipients that are incapable of self-preservation are located at other than the level of exit discharge serving such a facility.

In buildings where ambulatory care is provided on levels other than the *level of exit discharge*, an *automatic sprinkler system* shall be installed throughout the entire floor where such care is provided as well as all floors below, and all floors between the level of ambulatory care and the nearest *level of exit discharge*, including the *level of exit discharge*.

[F] 903.2.3 Group E. An *automatic sprinkler system* shall be provided for Group E occupancies as follows:

1. Throughout all Group E *fire areas* greater than 12,000 square feet (1115 m^2) in area.
2. Throughout every portion of educational buildings below the lowest *level of exit discharge* serving that portion of the building.

   Exception: An *automatic sprinkler system* is not required in any area below the lowest *level of exit discharge* serving that area where every classroom throughout the building has not fewer than one exterior *exit* door at ground level.

[F] 903.2.4 Group F-1. An *automatic sprinkler system* shall be provided throughout all buildings containing a Group F-1 occupancy where one of the following conditions exists:

1. A Group F-1 *fire area* exceeds 12,000 square feet (1115 m^2).
2. A Group F-1 *fire area* is located more than three stories above *grade plane*.
3. The combined area of all Group F-1 *fire areas* on all floors, including any mezzanines, exceeds 24,000 square feet (2230 m^2).

4. A Group F-1 occupancy used for the manufacture of upholstered furniture or mattresses exceeds 2,500 square feet (232 m^2).

[F] 903.2.4.1 Woodworking operations. An *automatic sprinkler system* shall be provided throughout all Group F-1 occupancy *fire areas* that contain woodworking operations in excess of 2,500 square feet (232 m^2) in area that generate finely divided combustible waste or use finely divided combustible materials.

[F] 903.2.5 Group H. *Automatic sprinkler systems* shall be provided in high-hazard occupancies as required in Sections 903.2.5.1 through 903.2.5.3.

[F] 903.2.5.1 General. An *automatic sprinkler system* shall be installed in Group H occupancies.

[F] 903.2.5.2 Group H-5 occupancies. An *automatic sprinkler system* shall be installed throughout buildings containing Group H-5 occupancies. The design of the sprinkler system shall be not less than that required by this code for the occupancy hazard classifications in accordance with Table 903.2.5.2.

Where the design area of the sprinkler system consists of a *corridor* protected by one row of sprinklers, the maximum number of sprinklers required to be calculated is 13.

[F] 903.2.5.3 Pyroxylin plastics. An *automatic sprinkler system* shall be provided in buildings, or portions thereof, where cellulose nitrate film or pyroxylin plastics are manufactured, stored or handled in quantities exceeding 100 pounds (45 kg).

[F] TABLE 903.2.5.2
GROUP H-5 SPRINKLER DESIGN CRITERIA

LOCATION	OCCUPANCY HAZARD CLASSIFICATION
Fabrication areas	Ordinary Hazard Group 2
Service corridors	Ordinary Hazard Group 2
Storage rooms without dispensing	Ordinary Hazard Group 2
Storage rooms with dispensing	Extra Hazard Group 2
Corridors	Ordinary Hazard Group 2

[F] 903.2.6 Group I. An *automatic sprinkler system* shall be provided throughout buildings with a Group I *fire area.*

Exceptions:

1. An *automatic sprinkler system* installed in accordance with Section 903.3.1.2 shall be permitted in Group I-1 Condition 1 facilities.
2. An *automatic sprinkler system* is not required where Group I-4 day care facilities are at the *level of exit discharge* and where every room where care is provided has not fewer than one exterior exit door.
3. In buildings where Group I-4 day care is provided on levels other than the *level of exit discharge*, an *automatic sprinkler system* in accordance with Section 903.3.1.1 shall be installed on the entire floor where care is provided, all floors between the level of care and the level of *exit discharge*, and all floors below the *level of exit discharge* other than areas classified as an open parking garage.

[F] 903.2.7 Group M. An *automatic sprinkler system* shall be provided throughout buildings containing a Group M occupancy where one of the following conditions exists:

1. A Group M *fire area* exceeds 12,000 square feet (1115 m^2).
2. A Group M *fire area* is located more than three stories above *grade plane.*
3. The combined area of all Group M *fire areas* on all floors, including any mezzanines, exceeds 24,000 square feet (2230 m^2).
4. A Group M occupancy used for the display and sale of upholstered furniture or mattresses exceeds 5,000 square feet (464 m^2).

[F] 903.2.7.1 High-piled storage. An *automatic sprinkler system* shall be provided in accordance with the *International Fire Code* in all buildings of Group M where storage of merchandise is in high-piled or rack storage arrays.

[F] 903.2.8 Group R. An *automatic sprinkler system* installed in accordance with Section 903.3 shall be provided throughout all buildings with a Group R *fire area.*

[F] 903.2.8.1 Group R-3. An *automatic sprinkler system* installed in accordance with Section 903.3.1.3 shall be permitted in Group R-3 occupancies.

[F] 903.2.8.2 Group R-4 Condition 1. An *automatic sprinkler system* installed in accordance with Section 903.3.1.3 shall be permitted in Group R-4 Condition 1 occupancies.

[F] 903.2.8.3 Group R-4 Condition 2. An *automatic sprinkler system* installed in accordance with Section 903.3.1.2 shall be permitted in Group R-4 Condition 2 occupancies. Attics shall be protected in accordance with Section 903.2.8.3.1 or 903.2.8.3.2.

[F] 903.2.8.3.1 Attics used for living purposes, storage or fuel-fired equipment. Attics used for living purposes, storage or fuel-fired equipment shall be protected throughout with an *automatic sprinkler system* installed in accordance with Section 903.3.1.2.

[F] 903.2.8.3.2 Attics not used for living purposes, storage or fuel-fired equipment. Attics not used for living purposes, storage or fuel-fired equipment shall be protected in accordance with one of the following:

1. Attics protected throughout by a heat detector system arranged to activate the building fire alarm system in accordance with Section 907.2.10.
2. Attics constructed of noncombustible materials.

3. Attics constructed of fire-retardant-treated wood framing complying with Section 2303.2.
4. The *automatic sprinkler system* shall be extended to provide protection throughout the attic space.

[F] 903.2.8.4 Care facilities. An *automatic sprinkler system* installed in accordance with Section 903.3.1.3 shall be permitted in care facilities with five or fewer individuals in a single-family dwelling.

[F] 903.2.9 Group S-1. An *automatic sprinkler system* shall be provided throughout all buildings containing a Group S-1 occupancy where one of the following conditions exists:

1. A Group S-1 *fire area* exceeds 12,000 square feet (1115 m^2).
2. A Group S-1 *fire area* is located more than three stories above *grade plane*.
3. The combined area of all Group S-1 *fire areas* on all floors, including any mezzanines, exceeds 24,000 square feet (2230 m^2).
4. A Group S-1 *fire area* used for the storage of commercial motor vehicles where the *fire area* exceeds 5,000 square feet (464 m^2).
5. A Group S-1 occupancy used for the storage of upholstered furniture or mattresses exceeds 2,500 square feet (232 m^2).

[F] 903.2.9.1 Repair garages. An *automatic sprinkler system* shall be provided throughout all buildings used as repair garages in accordance with Section 406, as shown:

1. Buildings having two or more *stories above grade plane*, including basements, with a *fire area* containing a repair garage exceeding 10,000 square feet (929 m^2).
2. Buildings not more than one *story above grade plane*, with a *fire area* containing a repair garage exceeding 12,000 square feet (1115 m^2).
3. Buildings with repair garages servicing vehicles parked in basements.
4. A Group S-1 *fire area* used for the repair of commercial motor vehicles where the *fire area* exceeds 5,000 square feet (464 m^2).

[F] 903.2.9.2 Bulk storage of tires. Buildings and structures where the area for the storage of tires exceeds 20,000 cubic feet (566 m^3) shall be equipped throughout with an *automatic sprinkler system* in accordance with Section 903.3.1.1.

[F] 903.2.10 Group S-2 enclosed parking garages. An *automatic sprinkler system* shall be provided throughout buildings classified as enclosed parking garages in accordance with Section 406.6 where either of the following conditions exists:

1. Where the *fire area* of the enclosed parking garage exceeds 12,000 square feet (1115 m^2).
2. Where the enclosed parking garage is located beneath other groups.

   Exception: Enclosed parking garages located beneath Group R-3 occupancies.

[F] 903.2.10.1 Commercial parking garages. An *automatic sprinkler system* shall be provided throughout buildings used for storage of commercial motor vehicles where the *fire area* exceeds 5,000 square feet (464 m^2).

[F] 903.2.11 Specific building areas and hazards. In all occupancies other than Group U, an *automatic sprinkler system* shall be installed for building design or hazards in the locations set forth in Sections 903.2.11.1 through 903.2.11.6.

[F] 903.2.11.1 Stories without openings. An *automatic sprinkler system* shall be installed throughout all *stories*, including basements, of all buildings where the floor area exceeds 1,500 square feet (139.4 m^2) and where there is not provided not fewer than one of the following types of *exterior wall* openings:

1. Openings below grade that lead directly to ground level by an exterior *stairway* complying with Section 1009 or an outside ramp complying with Section 1010. Openings shall be located in each 50 linear feet (15 240 mm), or fraction thereof, of *exterior wall* in the *story* on at least one side. The required openings shall be distributed such that the lineal distance between adjacent openings does not exceed 50 feet (15 240 mm).
2. Openings entirely above the adjoining ground level totaling not less than 20 square feet (1.86 m^2) in each 50 linear feet (15 240 mm), or fraction thereof, of *exterior wall* in the story on at least one side. The required openings shall be distributed such that the lineal distance between adjacent openings does not exceed 50 feet (15 240 mm). The height of the bottom of the clear opening shall not exceed 44 inches (1118 mm) measured from the floor.

[F] 903.2.11.1.1 Opening dimensions and access. Openings shall have a minimum dimension of not less than 30 inches (762 mm). Such openings shall be accessible to the fire department from the exterior and shall not be obstructed in a manner such that fire fighting or rescue cannot be accomplished from the exterior.

[F] 903.2.11.1.2 Openings on one side only. Where openings in a *story* are provided on only one side and the opposite wall of such *story* is more than 75 feet (22 860 mm) from such openings, the *story* shall be equipped throughout with an *approved automatic sprinkler system*, or openings as specified above shall be provided on not fewer than two sides of the *story*.

[F] 903.2.11.1.3 Basements. Where any portion of a *basement* is located more than 75 feet (22 860 mm) from openings required by Section 903.2.11.1, or where walls, partitions or other obstructions are installed that restrict the application of water from hose streams, the *basement* shall be equipped throughout with an *approved automatic sprinkler system.*

[F] 903.2.11.2 Rubbish and linen chutes. An *automatic sprinkler system* shall be installed at the top of rubbish and linen chutes and in their terminal rooms. Chutes shall have additional sprinkler heads installed at alternate floors and at the lowest intake. Where a rubbish chute extends through a building more than one floor below the lowest intake, the extension shall have sprinklers installed that are recessed from the drop area of the chute and protected from freezing in accordance with Section 903.3.1.1. Such sprinklers shall be installed at alternate floors, beginning with the second level below the last intake and ending with the floor above the discharge. Chute sprinklers shall be accessible for servicing.

[F] 903.2.11.3 Buildings 55 feet or more in height. An *automatic sprinkler system* shall be installed throughout buildings that have one or more stories with an *occupant load* of 30 or more located 55 feet (16 764 mm) or more above the lowest level of fire department vehicle access, measured to the finished floor.

Exceptions:

1. Open parking structures.
2. Occupancies in Group F-2.

[F] 903.2.11.4 Ducts conveying hazardous exhausts. Where required by the *International Mechanical Code*, automatic sprinklers shall be provided in ducts conveying hazardous exhaust or flammable or combustible materials.

Exception: Ducts where the largest cross-sectional diameter of the duct is less than 10 inches (254 mm).

[F] 903.2.11.5 Commercial cooking operations. An *automatic sprinkler system* shall be installed in commercial kitchen exhaust hood and duct systems where an *automatic sprinkler system* is used to comply with Section 904.

[F] 903.2.11.6 Other required suppression systems. In addition to the requirements of Section 903.2, the provisions indicated in Table 903.2.11.6 require the installation of a fire suppression system for certain buildings and areas.

[[F] 903.2.12 During construction. *Automatic sprinkler systems* required during construction, *alteration* and demolition operations shall be provided in accordance with Chapter 33 of the *International Fire Code.*

[F] 903.3 Installation requirements. *Automatic sprinkler systems* shall be designed and installed in accordance with Sections 903.3.1 through 903.3.8.

F] TABLE 903.2.11.6
ADDITIONAL REQUIRED SUPPRESSION SYSTEMS

SECTION	SUBJECT
402.5, 402.6.2	Covered and open mall buildings
403.3	High-rise buildings
404.3	Atriums
405.3	Underground structures
407.6	Group I-2
410.7	Stages
411.4	Special amusement buildings
412.3.6	Airport traffic control towers
412.4.6, 412.4.6.1, 412.6.5	Aircraft hangars
415.11.11	Group H-5 HPM exhaust ducts
416.5	Flammable finishes
417.4	Drying rooms
419.5	*Live/work units*
424.3	Children's play structures
507	Unlimited area buildings
509.4	Incidental uses
1029.6.2.3	Smoke-protected assembly seating
IFC	Sprinkler system requirements as set forth in Section 903.2.11.6 of the *International Fire Code*

[F] 903.3.1 Standards. Sprinkler systems shall be designed and installed in accordance with Section 903.3.1.1 unless otherwise permitted by Sections 903.3.1.2 and 903.3.1.3 and other chapters of this code, as applicable.

[F] 903.3.1.1 NFPA 13 sprinkler systems. Where the provisions of this code require that a building or portion thereof be equipped throughout with an *automatic sprinkler system* in accordance with this section, sprinklers shall be installed throughout in accordance with NFPA 13 except as provided in Sections 903.3.1.1.1 and 903.3.1.1.2.

[F] 903.3.1.1.1 Exempt locations. Automatic sprinklers shall not be required in the following rooms or areas where such rooms or areas are protected with an *approved* automatic fire detection system in accordance with Section 907.2 that will respond to visible or invisible particles of combustion. Sprinklers shall not be omitted from a room merely because it is damp, of fire-resistance-rated construction or contains electrical equipment.

1. A room where the application of water, or flame and water, constitutes a serious life or fire hazard.
2. A room or space where sprinklers are considered undesirable because of the nature of the contents, where *approved* by the fire code official.

3. Generator and transformer rooms separated from the remainder of the building by walls and floor/ceiling or roof/ceiling assemblies having a *fire-resistance rating* of not less than 2 hours.
4. Rooms or areas that are of noncombustible construction with wholly noncombustible contents.
5. Fire service access elevator machine rooms and machinery spaces.
6. Machine rooms, machinery spaces, control rooms and control spaces associated with occupant evacuation elevators designed in accordance with Section 3008.

[F] 903.3.1.1.2 Bathrooms. In Group R occupancies, other than Group R-4 occupancies, sprinklers shall not be required in bathrooms that do not exceed 55 square feet (5 m^2) in area and are located within individual *dwelling units* or *sleeping units*, provided that walls and ceilings, including the walls and ceilings behind a shower enclosure or tub, are of noncombustible or limited-combustible materials with a 15-minute thermal barrier rating.

[F] 903.3.1.2 NFPA 13R sprinkler systems. *Automatic sprinkler systems* in Group R occupancies up to and including four stories in height in buildings not exceeding 60 feet (18 288 mm) in height above grade plane shall be permitted to be installed throughout in accordance with NFPA 13R.

The number of stories of Group R occupancies constructed in accordance with Sections 510.2 and 510.4 shall be measured from the horizontal assembly creating separate buildings.

[F] 903.3.1.2.1 Balconies and decks. Sprinkler protection shall be provided for exterior balconies, decks and ground floor patios of *dwelling units* and *sleeping units* where the building is of Type V construction, provided there is a roof or deck above. Sidewall sprinklers that are used to protect such areas shall be permitted to be located such that their deflectors are within 1 inch (25 mm) to 6 inches (152 mm) below the structural members and a maximum distance of 14 inches (356 mm) below the deck of the exterior balconies and decks that are constructed of open wood joist construction.

[F] 903.3.1.2.2 Open-ended corridors. Sprinkler protection shall be provided in *open-ended corridors* and associated *exterior stairways* and *ramps* as specified in Section 1027.6, Exception 3.

[F] 903.3.1.3 NFPA 13D sprinkler systems. *Automatic sprinkler systems* installed in one- and two-family *dwellings*; Group R-3, Group R-4 Condition 1 and *townhouses* shall be permitted to be installed throughout in accordance with NFPA 13D.

[F] 903.3.2 Quick-response and residential sprinklers. Where *automatic sprinkler systems* are required by this code, quick-response or residential automatic sprinklers shall be installed in all of the following areas in accordance with Section 903.3.1 and their listings:

1. Throughout all spaces within a smoke compartment containing care recipient *sleeping units* in Group I-2 in accordance with this code.
2. Throughout all spaces within a smoke compartment containing treatment rooms in ambulatory care facilities.
3. *Dwelling units* and *sleeping units* in Group I-1 and R occupancies.
4. Light-hazard occupancies as defined in NFPA 13.

[F] 903.3.3 Obstructed locations. Automatic sprinklers shall be installed with due regard to obstructions that will delay activation or obstruct the water distribution pattern. Automatic sprinklers shall be installed in or under covered kiosks, displays, booths, concession stands, or equipment that exceeds 4 feet (1219 mm) in width. Not less than a 3-foot (914 mm) clearance shall be maintained between automatic sprinklers and the top of piles of combustible fibers.

Exception: Kitchen equipment under exhaust hoods protected with a fire-extinguishing system in accordance with Section 904.

[F] 903.3.4 Actuation. *Automatic sprinkler systems* shall be automatically actuated unless specifically provided for in this code.

[F] 903.3.5 Water supplies. Water supplies for *automatic sprinkler systems* shall comply with this section and the standards referenced in Section 903.3.1. The potable water supply shall be protected against backflow in accordance with the requirements of this section and the *International Plumbing Code*. For connections to public waterworks systems, the water supply test used for design of fire protection systems shall be adjusted to account for seasonal and daily pressure fluctuations based on information from the water supply authority and as approved by the fire code official.

[F] 903.3.5.1 Domestic services. Where the domestic service provides the water supply for the *automatic sprinkler system*, the supply shall be in accordance with this section. *

[F] 903.3.5.2 Residential combination services. A single combination water supply shall be allowed provided that the domestic demand is added to the sprinkler demand as required by NFPA 13R.

[F] 903.3.6 Hose threads. Fire hose threads and fittings used in connection with *automatic sprinkler systems* shall be as prescribed by the fire code official.

[F] 903.3.7 Fire department connections. Fire department connections for *automatic sprinkler systems* shall be installed in accordance with Section 912.

[F] 903.3.8 Limited area sprinkler systems. Limited area sprinkler systems shall be in accordance with the standards listed in Section 903.3.1 except as provided in Sections 903.3.8.1 through 903.3.8.5. **

903.3.8.1 Number of sprinklers. Limited area sprinkler systems shall not exceed six sprinklers in any single *fire area.*

903.3.8.2 Occupancy hazard classification. Only areas classified by NFPA 13 as Light Hazard or Ordinary Hazard Group 1 shall be permitted to be protected by limited area sprinkler systems.

903.3.8.3 Piping arrangement. Where a limited area sprinkler system is installed in a building with an automatic wet standpipe system, sprinklers shall be supplied by the standpipe system. Where a limited area sprinkler system is installed in a building without an automatic wet standpipe system, water shall be permitted to be supplied by the plumbing system provided that the plumbing system is capable of simultaneously supplying domestic and sprinkler demands.

903.3.8.4 Supervision. Control valves shall not be installed between the water supply and sprinklers unless the valves are of an *approved* indicating type that are supervised or secured in the open position.

903.3.8.5 Calculations. Hydraulic calculations in accordance with NFPA 13 shall be provided to demonstrate that the available water flow and pressure are adequate to supply all sprinklers installed in any single *fire area* with discharge densities corresponding to the hazard classification.

[F] 903.4 Sprinkler system supervision and alarms. Valves controlling the water supply for *automatic sprinkler systems*, pumps, tanks, water levels and temperatures, critical air pressures and waterflow switches on all sprinkler systems shall be electrically supervised by a *listed* fire alarm control unit.

Exceptions:

1. *Automatic sprinkler systems* protecting one- and two-family *dwellings*.
2. Limited area sprinkler systems in accordance with Section 903.3.8.
3. *Automatic sprinkler systems* installed in accordance with NFPA 13R where a common supply main is used to supply both domestic water and the *automatic sprinkler system*, and a separate shutoff valve for the *automatic sprinkler system* is not provided.
4. Jockey pump control valves that are sealed or locked in the open position.
5. Control valves to commercial kitchen hoods, paint spray booths or dip tanks that are sealed or locked in the open position.
6. Valves controlling the fuel supply to fire pump engines that are sealed or locked in the open position.
7. Trim valves to pressure switches in dry, preaction and deluge sprinkler systems that are sealed or locked in the open position.

[F] 903.4.1 Monitoring. Alarm, supervisory and trouble signals shall be distinctly different and shall be automatically transmitted to an *approved* supervising station or, where *approved* by the fire code official, shall sound an audible signal at a *constantly attended location.*

Exceptions:

1. Underground key or hub valves in roadway boxes provided by the municipality or public utility are not required to be monitored.
2. Backflow prevention device test valves located in limited area sprinkler system supply piping shall be locked in the open position. In occupancies required to be equipped with a fire alarm system, the backflow preventer valves shall be electrically supervised by a tamper switch installed in accordance with NFPA 72 and separately annunciated.

[F] 903.4.2 Alarms. An approved audible device, located on the exterior of the building in an approved location, shall be connected to each *automatic sprinkler system.* Such sprinkler waterflow alarm devices shall be activated by water flow equivalent to the flow of a single sprinkler of the smallest orifice size installed in the system. Where a fire alarm system is installed, actuation of the *automatic sprinkler system* shall actuate the building fire alarm system.

[F] 903.4.3 Floor control valves. *Approved* supervised indicating control valves shall be provided at the point of connection to the riser on each floor in high-rise buildings.

[F] 903.5 Testing and maintenance. Sprinkler systems shall be tested and maintained in accordance with the *International Fire Code.*

SECTION 904
ALTERNATIVE AUTOMATIC FIRE-EXTINGUISHING SYSTEMS

[F] 904.1 General. Automatic fire-extinguishing systems, other than *automatic sprinkler systems*, shall be designed, installed, inspected, tested and maintained in accordance with the provisions of this section and the applicable referenced standards.

[F] 904.2 Where permitted. Automatic fire-extinguishing systems installed as an alternative to the required *automatic sprinkler systems* of Section 903 shall be *approved* by the fire code official.

[F] 904.2.1 Restriction on using automatic sprinkler system exceptions or reductions. Automatic fire-extinguishing systems shall not be considered alternatives for the purposes of exceptions or reductions allowed for *automatic sprinkler systems* or by other requirements of this code.

[F] 904.2.2 Commercial hood and duct systems. Each required commercial kitchen exhaust hood and duct system required by Section 609 of the *International Fire Code* or Chapter 5 of the *International Mechanical Code* to have a Type I hood shall be protected with an approved automatic fire-extinguishing system installed in accordance with this code.

[F] 904.3 Installation. Automatic fire-extinguishing systems shall be installed in accordance with this section.

[F] 904.3.1 Electrical wiring. Electrical wiring shall be in accordance with NFPA 70.

[F] 904.3.2 Actuation. Automatic fire-extinguishing systems shall be automatically actuated and provided with a manual means of actuation in accordance with Section 904.11.1. Where more than one hazard could be simultaneously involved in fire due to their proximity, all hazards shall be protected by a single system designed to protect all hazards that could become involved.

Exception: Multiple systems shall be permitted to be installed if they are designed to operate simultaneously.

[F] 904.3.3 System interlocking. Automatic equipment interlocks with fuel shutoffs, ventilation controls, door closers, window shutters, conveyor openings, smoke and heat vents and other features necessary for proper operation of the fire-extinguishing system shall be provided as required by the design and installation standard utilized for the hazard.

[F] 904.3.4 Alarms and warning signs. Where alarms are required to indicate the operation of automatic fire-extinguishing systems, distinctive audible and visible alarms and warning signs shall be provided to warn of pending agent discharge. Where exposure to automatic-extinguishing agents poses a hazard to persons and a delay is required to ensure the evacuation of occupants before agent discharge, a separate warning signal shall be provided to alert occupants once agent discharge has begun. Audible signals shall be in accordance with Section 907.5.2.

[F] 904.3.5 Monitoring. Where a building fire alarm system is installed, automatic fire-extinguishing systems shall be monitored by the building fire alarm system in accordance with NFPA 72.

[F] 904.4 Inspection and testing. Automatic fire-extinguishing systems shall be inspected and tested in accordance with the provisions of this section prior to acceptance.

[F] 904.4.1 Inspection. Prior to conducting final acceptance tests, all of the following items shall be inspected:

1. Hazard specification for consistency with design hazard.
2. Type, location and spacing of automatic- and manual-initiating devices.
3. Size, placement and position of nozzles or discharge orifices.
4. Location and identification of audible and visible alarm devices.
5. Identification of devices with proper designations.
6. Operating instructions.

[F] 904.4.2 Alarm testing. Notification appliances, connections to fire alarm systems and connections to *approved* supervising stations shall be tested in accordance with this section and Section 907 to verify proper operation.

[F] 904.4.2.1 Audible and visible signals. The audibility and visibility of notification appliances signaling agent discharge or system operation, where required, shall be verified.

[F] 904.4.3 Monitor testing. Connections to protected premises and supervising station fire alarm systems shall be tested to verify proper identification and retransmission of alarms from automatic fire-extinguishing systems.

[F] 904.5 Wet-chemical systems. Wet-chemical extinguishing systems shall be installed, maintained, periodically inspected and tested in accordance with NFPA 17A and their listing. Records of inspections and testing shall be maintained.

[F] 904.6 Dry-chemical systems. Dry-chemical extinguishing systems shall be installed, maintained, periodically inspected and tested in accordance with NFPA 17 and their listing. Records of inspections and testing shall be maintained.

[F] 904.7 Foam systems. Foam-extinguishing systems shall be installed, maintained, periodically inspected and tested in accordance with NFPA 11 and NFPA 16 and their listing. Records of inspections and testing shall be maintained.

[F] 904.8 Carbon dioxide systems. Carbon dioxide extinguishing systems shall be installed, maintained, periodically inspected and tested in accordance with NFPA 12 and their listing. Records of inspections and testing shall be maintained.

[F] 904.9 Halon systems. Halogenated extinguishing systems shall be installed, maintained, periodically inspected and tested in accordance with NFPA 12A and their listing. Records of inspections and testing shall be maintained.

[F] 904.10 Clean-agent systems. Clean-agent fire-extinguishing systems shall be installed, maintained, periodically inspected and tested in accordance with NFPA 2001 and their listing. Records of inspections and testing shall be maintained.

[F] 904.11 Automatic water mist systems. *Automatic water mist systems* shall be permitted in applications that are consistent with the applicable listing or approvals and shall comply with Sections 904.11.1 through 904.11.3.

[F] 904.11.1 Design and installation requirements. *Automatic water mist systems* shall be designed and installed in accordance with Sections 904.11.1.1 through 904.11.1.4.

[F] 904.11.1.1 General. *Automatic water mist systems* shall be designed and installed in accordance with NFPA 750 and the manufacturer's instructions.

[F] 904.11.1.2 Actuation. *Automatic water mist systems* shall be automatically actuated.

[F] 904.11.1.3 Water supply protection. Connections to a potable water supply shall be protected against backflow in accordance with the *International Plumbing Code*.

[F] 904.11.1.4 Secondary water supply. Where a secondary water supply is required for an *automatic sprin-*

kler system, an *automatic water mist system* shall be provided with an *approved* secondary water supply.

[F] 904.11.2 Water mist system supervision and alarms. Supervision and alarms shall be provided as required for *automatic sprinkler systems* in accordance with Section 903.4.

[F] 904.11.2.1 Monitoring. Monitoring shall be provided as required for *automatic sprinkler systems* in accordance with Section 903.4.1.

[F] 904.11.2.2 Alarms. Alarms shall be provided as required for *automatic sprinkler systems* in accordance with Section 903.4.2.

[F] 904.11.2.3 Floor control valves. Floor control valves shall be provided as required for *automatic sprinkler systems* in accordance with Section 903.4.3.

[F] 904.11.3 Testing and maintenance. *Automatic water mist systems* shall be tested and maintained in accordance with the *International Fire Code*.

[F] 904.12 Commercial cooking systems. The automatic fire-extinguishing system for commercial cooking systems shall be of a type recognized for protection of commercial cooking equipment and exhaust systems of the type and arrangement protected. Preengineered automatic dry- and wet-chemical extinguishing systems shall be tested in accordance with UL 300 and *listed* and *labeled* for the intended application. Other types of automatic fire-extinguishing systems shall be *listed* and *labeled* for specific use as protection for commercial cooking operations. The system shall be installed in accordance with this code, its listing and the manufacturer's installation instructions. Automatic fire-extinguishing systems of the following types shall be installed in accordance with the referenced standard indicated, as follows:

1. Carbon dioxide extinguishing systems, NFPA 12.
2. *Automatic sprinkler systems*, NFPA 13.
3. Foam-water sprinkler system or foam-water spray systems, NFPA 16.
4. Dry-chemical extinguishing systems, NFPA 17.
5. Wet-chemical extinguishing systems, NFPA 17A.

Exception: Factory-built commercial cooking recirculating systems that are tested in accordance with UL 710B and *listed*, *labeled* and installed in accordance with Section 304.1 of the *International Mechanical Code*.

[F] 904.12.1 Manual system operation. A manual actuation device shall be located at or near a *means of egress* from the cooking area not less than 10 feet (3048 mm) and not more than 20 feet (6096 mm) from the kitchen exhaust system. The manual actuation device shall be installed not more than 48 inches (1200 mm) or less than 42 inches (1067 mm) above the floor and shall clearly identify the hazard protected. The manual actuation shall require a maximum force of 40 pounds (178 N) and a maximum movement of 14 inches (356 mm) to actuate the fire suppression system.

Exception: *Automatic sprinkler systems* shall not be required to be equipped with manual actuation means.

[F] 904.12.2 System interconnection. The actuation of the fire suppression system shall automatically shut down the fuel or electrical power supply to the cooking equipment. The fuel and electrical supply reset shall be manual.

[F] 904.12.3 Carbon dioxide systems. Where carbon dioxide systems are used, there shall be a nozzle at the top of the ventilating duct. Additional nozzles that are symmetrically arranged to give uniform distribution shall be installed within vertical ducts exceeding 20 feet (6096 mm) and horizontal ducts exceeding 50 feet (15 240 mm). *Dampers* shall be installed at either the top or the bottom of the duct and shall be arranged to operate automatically upon activation of the fire-extinguishing system. Where the *damper* is installed at the top of the duct, the top nozzle shall be immediately below the *damper*. Automatic carbon dioxide fire-extinguishing systems shall be sufficiently sized to protect against all hazards venting through a common duct simultaneously.

[F] 904.12.3.1 Ventilation system. Commercial-type cooking equipment protected by an automatic carbon dioxide-extinguishing system shall be arranged to shut off the ventilation system upon activation.

[F] 904.12.4 Special provisions for automatic sprinkler systems. *Automatic sprinkler systems* protecting commercial-type cooking equipment shall be supplied from a separate, readily accessible, indicating-type control valve that is identified.

[F] 904.12.4.1 Listed sprinklers. Sprinklers used for the protection of fryers shall be tested in accordance with UL 199E, *listed* for that application and installed in accordance with their listing.

[F] 904.13 Domestic cooking systems in Group I-2 Condition 1. In Group I-2 Condition 1, occupancies where cooking facilities are installed in accordance with Section 407.2.6 of this code, the domestic cooking hood provided over the cooktop or range shall be equipped with an automatic fire-extinguishing system of a type recognized for protection of domestic cooking equipment. Preengineered automatic extinguishing systems shall be tested in accordance with UL 300A and listed and labeled for the intended application. The system shall be installed in accordance with this code, its listing and the manufacturer's instructions.

[F] 904.13.1 Manual system operation and interconnection. Manual actuation and system interconnection for the hood suppression system shall be installed in accordance with Sections 904.12.1 and 904.12.2, respectively.

[F] 904.13.2 Portable fire extinguishers for domestic cooking equipment in Group I-2 Condition 1. A portable fire extinguisher complying with Section 906 shall be installed within a 30-foot (9144 mm) distance of travel from domestic cooking appliances.

SECTION 905
STANDPIPE SYSTEMS

[F] 905.1 General. Standpipe systems shall be provided in new buildings and structures in accordance with Sections 905.2 through 905.10. In buildings used for high-piled combustible storage, fire protection shall be in accordance with the *International Fire Code*.

[F] 905.2 Installation standard. Standpipe systems shall be installed in accordance with this section and NFPA 14. Fire department connections for standpipe systems shall be in accordance with Section 912.

[F] 905.3 Required installations. Standpipe systems shall be installed where required by Sections 905.3.1 through 905.3.8. Standpipe systems are allowed to be combined with *automatic sprinkler systems*.

Exception: Standpipe systems are not required in Group R-3 occupancies.

[F] 905.3.1 Height. Class III standpipe systems shall be installed throughout buildings where the floor level of the highest *story* is located more than 30 feet (9144 mm) above the lowest level of fire department vehicle access, or where the floor level of the lowest *story* is located more than 30 feet (9144 mm) below the highest level of fire department vehicle access.

Exceptions:

1. Class I standpipes are allowed in buildings equipped throughout with an *automatic sprinkler system* in accordance with Section 903.3.1.1 or 903.3.1.2.
2. Class I manual standpipes are allowed in *open parking garages* where the highest floor is located not more than 150 feet (45 720 mm) above the lowest level of fire department vehicle access.
3. Class I manual dry standpipes are allowed in *open parking garages* that are subject to freezing temperatures, provided that the hose connections are located as required for Class II standpipes in accordance with Section 905.5.
4. Class I standpipes are allowed in basements equipped throughout with an *automatic sprinkler system*.
5. In determining the lowest level of fire department vehicle access, it shall not be required to consider either of the following:
   - 5.1. Recessed loading docks for four vehicles or less.
   - 5.2. Conditions where topography makes access from the fire department vehicle to the building impractical or impossible.

[F] 905.3.2 Group A. Class I automatic wet standpipes shall be provided in nonsprinklered Group A buildings having an *occupant load* exceeding 1,000 persons.

Exceptions:

1. Open-air-seating spaces without enclosed spaces.
2. Class I automatic dry and semiautomatic dry standpipes or manual wet standpipes are allowed in buildings that are not high-rise buildings.

[F] 905.3.3 Covered and open mall buildings. Covered mall and open mall buildings shall be equipped throughout with a standpipe system where required by Section 905.3.1. Mall buildings not required to be equipped with a standpipe system by Section 905.3.1 shall be equipped with Class I hose connections connected to the *automatic sprinkler system* sized to deliver water at 250 gallons per minute (946.4 L/min) at the most hydraulically remote hose connection while concurrently supplying the automatic sprinkler system demand. The standpipe system shall be designed to not exceed a 50 pounds per square inch (psi) (345 kPa) residual pressure loss with a flow of 250 gallons per minute (946.4 L/min) from the fire department connection to the hydraulically most remote hose connection. Hose connections shall be provided at each of the following locations:

1. Within the mall at the entrance to each *exit* passageway or *corridor*.
2. At each floor-level landing within *interior exit stairways* opening directly on the mall.
3. At exterior public entrances to the mall of a covered mall building.
4. At public entrances at the perimeter line of an open mall building.
5. At other locations as necessary so that the distance to reach all portions of a tenant space does not exceed 200 feet (60 960 mm) from a hose connection.

[F] 905.3.4 Stages. Stages greater than 1,000 square feet in area (93 m^2) shall be equipped with a Class III wet standpipe system with $1^1/_2$-inch and $2^1/_2$-inch (38 mm and 64 mm) hose connections on each side of the stage.

Exception: Where the building or area is equipped throughout with an *automatic sprinkler system*, a $1^1/_2$-inch (38 mm) hose connection shall be installed in accordance with NFPA 13 or in accordance with NFPA 14 for Class II or III standpipes.

[F] 905.3.4.1 Hose and cabinet. The $1^1/_2$-inch (38 mm) hose connections shall be equipped with sufficient lengths of $1^1/_2$-inch (38 mm) hose to provide fire protection for the stage area. Hose connections shall be equipped with an *approved* adjustable fog nozzle and be mounted in a cabinet or on a rack.

[F] 905.3.5 Underground buildings. Underground buildings shall be equipped throughout with a Class I automatic wet or manual wet standpipe system.

[F] 905.3.6 Helistops and heliports. Buildings with a rooftop *helistop* or *heliport* shall be equipped with a Class I or III standpipe system extended to the roof level on which the *helistop* or *heliport* is located in accordance with Section 2007.5 of the *International Fire Code*.

[F] 905.3.7 Marinas and boatyards. Standpipes in marinas and boatyards shall comply with Chapter 36 of the *International Fire Code*.

[F] 905.3.8 Rooftop gardens and landscaped roofs. Buildings or structures that have rooftop gardens or landscaped roofs and that are equipped with a standpipe system shall have the standpipe system extended to the roof level on which the rooftop garden or landscaped roof is located.

[F] 905.4 Location of Class I standpipe hose connections. Class I standpipe hose connections shall be provided in all of the following locations:

1. In every required *interior exit stairway*, a hose connection shall be provided for each story above and below grade. Hose connections shall be located at an intermediate landing between stories, unless otherwise *approved* by the fire code official.
2. On each side of the wall adjacent to the *exit* opening of a *horizontal exit*.

   Exception: Where floor areas adjacent to a *horizontal exit* are reachable from an *interior exit stairway* hose connection by a 30-foot (9144 mm) hose stream from a nozzle attached to 100 feet (30 480 mm) of hose, a hose connection shall not be required at the *horizontal exit*.
3. In every *exit* passageway, at the entrance from the *exit* passageway to other areas of a building.

   Exception: Where floor areas adjacent to an *exit* passageway are reachable from an *interior exit stairway* hose connection by a 30-foot (9144 mm) hose stream from a nozzle attached to 100 feet (30 480 mm) of hose, a hose connection shall not be required at the entrance from the *exit* passageway to other areas of the building.
4. In covered mall buildings, adjacent to each exterior public entrance to the mall and adjacent to each entrance from an exit passageway or exit corridor to the mall. In open mall buildings, adjacent to each public entrance to the mall at the perimeter line and adjacent to each entrance from an exit passageway or exit corridor to the mall.
5. Where the roof has a slope less than four units vertical in 12 units horizontal (33.3-percent slope), a hose connection shall be located to serve the roof or at the highest landing of an *interior exit stairway* with access to the roof provided in accordance with Section 1011.12.
6. Where the most remote portion of a nonsprinklered floor or *story* is more than 150 feet (45 720 mm) from a hose connection or the most remote portion of a sprinklered floor or *story* is more than 200 feet (60 960 mm) from a hose connection, the fire code official is authorized to require that additional hose connections be provided in *approved* locations.

[F] 905.4.1 Protection. Risers and laterals of Class I standpipe systems not located within an *interior exit stairway* shall be protected by a degree of *fire resistance* equal to that required for vertical enclosures in the building in which they are located.

Exception: In buildings equipped throughout with an *approved automatic sprinkler system*, laterals that are not located within an *interior exit stairway* are not required to be enclosed within fire-resistance-rated construction.

[F] 905.4.2 Interconnection. In buildings where more than one standpipe is provided, the standpipes shall be interconnected in accordance with NFPA 14.

[F] 905.5 Location of Class II standpipe hose connections. Class II standpipe hose connections shall be accessible and located so that all portions of the building are within 30 feet (9144 mm) of a nozzle attached to 100 feet (30 480 mm) of hose.

[F] 905.5.1 Groups A-1 and A-2. In Group A-1 and A-2 occupancies having *occupant loads* exceeding 1,000 persons, hose connections shall be located on each side of any stage, on each side of the rear of the auditorium, on each side of the balcony and on each tier of dressing rooms.

[F] 905.5.2 Protection. Fire-resistance-rated protection of risers and laterals of Class II standpipe systems is not required.

[F] 905.5.3 Class II system 1-inch hose. A minimum 1-inch (25 mm) hose shall be allowed to be used for hose stations in light-hazard occupancies where investigated and *listed* for this service and where *approved* by the fire code official.

[F] 905.6 Location of Class III standpipe hose connections. Class III standpipe systems shall have hose connections located as required for Class I standpipes in Section 905.4 and shall have Class II hose connections as required in Section 905.5.

[F] 905.6.1 Protection. Risers and laterals of Class III standpipe systems shall be protected as required for Class I systems in accordance with Section 905.4.1.

[F] 905.6.2 Interconnection. In buildings where more than one Class III standpipe is provided, the standpipes shall be interconnected in accordance with NFPA 14.

[F] 905.7 Cabinets. Cabinets containing fire-fighting equipment such as standpipes, fire hoses, fire extinguishers or fire department valves shall not be blocked from use or obscured from view.

[F] 905.7.1 Cabinet equipment identification. Cabinets shall be identified in an *approved* manner by a perma-

nently attached sign with letters not less than 2 inches (51 mm) high in a color that contrasts with the background color, indicating the equipment contained therein.

Exceptions:

1. Doors not large enough to accommodate a written sign shall be marked with a permanently attached pictogram of the equipment contained therein.
2. Doors that have either an *approved* visual identification clear glass panel or a complete glass door panel are not required to be marked.

[F] 905.7.2 Locking cabinet doors. Cabinets shall be unlocked.

Exceptions:

1. Visual identification panels of glass or other *approved* transparent frangible material that is easily broken and allows access.
2. *Approved* locking arrangements.
3. Group I-3.

[F] 905.8 Dry standpipes. Dry standpipes shall not be installed.

Exception: Where subject to freezing and in accordance with NFPA 14.

[F] 905.9 Valve supervision. Valves controlling water supplies shall be supervised in the open position so that a change in the normal position of the valve will generate a supervisory signal at the supervising station required by Section 903.4. Where a fire alarm system is provided, a signal shall be transmitted to the control unit.

Exceptions:

1. Valves to underground key or hub valves in roadway boxes provided by the municipality or public utility do not require supervision.
2. Valves locked in the normal position and inspected as provided in this code in buildings not equipped with a fire alarm system.

[F] 905.10 During construction. Standpipe systems required during construction and demolition operations shall be provided in accordance with Section 3311.

SECTION 906
PORTABLE FIRE EXTINGUISHERS

[F] 906.1 Where required. Portable fire extinguishers shall be installed in all of the following locations:

1. In Group A, B, E, F, H, I, M, R-1, R-2, R-4 and S occupancies.

   Exception: In Group R-2 occupancies, portable fire extinguishers shall be required only in locations specified in Items 2 through 6 where each *dwelling unit* is provided with a portable fire extinguisher having a minimum rating of 1-A:10-B:C.

2. Within 30 feet (9144 mm) of commercial cooking equipment.
3. In areas where flammable or combustible liquids are stored, used or dispensed.
4. On each floor of structures under construction, except Group R-3 occupancies, in accordance with Section 3315.1 of the *International Fire Code*.
5. Where required by the *International Fire Code* sections indicated in Table 906.1.
6. Special-hazard areas, including but not limited to laboratories, computer rooms and generator rooms, where required by the fire code official.

[F] 906.2 General requirements. Portable fire extinguishers shall be selected and installed in accordance with this section and NFPA 10.

Exceptions:

1. The distance of travel to reach an extinguisher shall not apply to the spectator seating portions of Group A-5 occupancies.
2. In Group I-3, portable fire extinguishers shall be permitted to be located at staff locations.

[F] 906.3 Size and distribution. The size and distribution of portable fire extinguishers shall be in accordance with Sections 906.3.1 through 906.3.4.

[F] 906.3.1 Class A fire hazards. The minimum sizes and distribution of portable fire extinguishers for occupancies that involve primarily Class A fire hazards shall comply with Table 906.3(1).

[F] 906.3.2 Class B fire hazards. Portable fire extinguishers for occupancies involving flammable or combustible liquids with depths less than or equal to 0.25-inch (6.4 mm) shall be selected and placed in accordance with Table 906.3(2).

Portable fire extinguishers for occupancies involving flammable or combustible liquids with a depth of greater than 0.25-inch (6.4 mm) shall be selected and placed in accordance with NFPA 10.

[F] 906.3.3 Class C fire hazards. Portable fire extinguishers for Class C fire hazards shall be selected and placed on the basis of the anticipated Class A or B hazard.

[F] 906.3.4 Class D fire hazards. Portable fire extinguishers for occupancies involving combustible metals shall be selected and placed in accordance with NFPA 10.

[F] 906.4 Cooking grease fires. Fire extinguishers provided for the protection of cooking grease fires shall be of an *approved* type compatible with the automatic fire-extinguishing system agent and in accordance with Section 904.12.5 of the *International Fire Code*.

[F] 906.5 Conspicuous location. Portable fire extinguishers shall be located in conspicuous locations where they will be readily accessible and immediately available for use. These locations shall be along normal paths of travel, unless the fire code official determines that the hazard posed indicates the need for placement away from normal paths of travel.

[F] TABLE 906.1
ADDITIONAL REQUIRED PORTABLE FIRE EXTINGUISHERS IN THE INTERNATIONAL FIRE CODE

IFC SECTION	SUBJECT
303.5	Asphalt kettles
307.5	Open burning
308.1.3	Open flames—torches
309.4	Powered industrial trucks
2005.2	Aircraft towing vehicles
2005.3	Aircraft welding apparatus
2005.4	Aircraft fuel-servicing tank vehicles
2005.5	Aircraft hydrant fuel-servicing vehicles
2005.6	Aircraft fuel-dispensing stations
2007.7	Heliports and helistops
2108.4	Dry cleaning plants
2305.5	Motor fuel-dispensing facilities
2310.6.4	Marine motor fuel-dispensing facilities
2311.6	Repair garages
2404.4.1	Spray-finishing operations
2405.4.2	Dip-tank operations
2406.4.2	Powder-coating areas
2804.3	Lumberyards/woodworking facilities
2808.8	Recycling facilities
2809.5	Exterior lumber storage
2903.5	Organic-coating areas
3006.3	Industrial ovens
3104.12	Tents and membrane structures
3206.10	High-piled storage
3315.1	Buildings under construction or demolition
3317.3	Roofing operations
3408.2	Tire rebuilding/storage
3504.2.6	Welding and other hot work
3604.4	Marinas
3703.6	Combustible fibers
5703.2.1	Flammable and combustible liquids, general
5704.3.3.1	Indoor storage of flammable and combustible liquids
5704.3.7.5.2	Liquid storage rooms for flammable and combustible liquids
5705.4.9	Solvent distillation units
5706.2.7	Farms and construction sites—flammable and combustible liquids storage
5706.4.10.1	Bulk plants and terminals for flammable and combustible liquids
5706.5.4.5	Commercial, industrial, governmental or manufacturing establishments—fuel dispensing
5706.6.4	Tank vehicles for flammable and combustible liquids
5906.5.7	Flammable solids
6108.2	LP-gas

[F]TABLE 906.3(1)
FIRE EXTINGUISHERS FOR CLASS A FIRE HAZARDS

	LIGHT (Low) HAZARD OCCUPANCY	ORDINARY (Moderate) HAZARD OCCUPANCY	EXTRA (High) HAZARD OCCUPANCY
Minimum rated single extinguisher	2-A[c]	2-A	4-A[a]
Maximum floor area per unit of A	3,000 square feet	1,500 square feet	1,000 square feet
Maximum floor area for extinguisher[b]	11,250 square feet	11,250 square feet	11,250 square feet
Maximum distance of travel to extinguisher	75 feet	75 feet	75 feet

For SI: 1 foot = 304.8 mm, 1 square foot = 0.0929m^2, 1 gallon = 3.785 L.

a. Two $2^1/_2$-gallon water-type extinguishers shall be deemed the equivalent of one 4-A rated extinguisher.

b. Annex E.3.3 of NFPA 10 provides more details concerning application of the maximum floor area criteria.

c. Two water-type extinguishers each with a 1-A rating shall be deemed the equivalent of one 2-A rated extinguisher for Light (Low) Hazard Occupancies.

[F] TABLE 906.3(2)
FIRE EXTINGUISHERS FOR FLAMMABLE OR COMBUSTIBLE LIQUIDS WITH DEPTHS LESS THAN OR EQUAL TO 0.25 INCH

TYPE OF HAZARD	BASIC MINIMUM EXTINGUISHER RATING	MAXIMUM DISTANCE OF TRAVEL TO EXTINGUISHERS (feet)
Light (Low)	5-B 10-B	30 50
Ordinary (Moderate)	10-B 20-B	30 50
Extra (High)	40-B 80-B	30 50

For SI: 1 inch = 25.4 mm, 1 foot = 304.8 mm.

Note: For requirements on water-soluble flammable liquids and alternative sizing criteria, see Section 5.5 of NFPA 10.

[F] 906.6 Unobstructed and unobscured. Portable fire extinguishers shall not be obstructed or obscured from view. In rooms or areas in which visual obstruction cannot be completely avoided, means shall be provided to indicate the locations of extinguishers.

[F] 906.7 Hangers and brackets. Hand-held portable fire extinguishers, not housed in cabinets, shall be installed on the hangers or brackets supplied. Hangers or brackets shall be securely anchored to the mounting surface in accordance with the manufacturer's installation instructions.

[F] 906.8 Cabinets. Cabinets used to house portable fire extinguishers shall not be locked.

Exceptions:

1. Where portable fire extinguishers subject to malicious use or damage are provided with a means of ready access.
2. In Group I-3 occupancies and in mental health areas in Group I-2 occupancies, access to portable fire

extinguishers shall be permitted to be locked or to be located in staff locations provided the staff has keys.

[F] 906.9 Extinguisher installation. The installation of portable fire extinguishers shall be in accordance with Sections 906.9.1 through 906.9.3.

[F] 906.9.1 Extinguishers weighing 40 pounds or less. Portable fire extinguishers having a gross weight not exceeding 40 pounds (18 kg) shall be installed so that their tops are not more than 5 feet (1524 mm) above the floor.

[F] 906.9.2 Extinguishers weighing more than 40 pounds. Hand-held portable fire extinguishers having a gross weight exceeding 40 pounds (18 kg) shall be installed so that their tops are not more than 3.5 feet (1067 mm) above the floor.

[F] 906.9.3 Floor clearance. The clearance between the floor and the bottom of installed hand-held portable fire extinguishers shall be not less than 4 inches (102 mm).

[F] 906.10 Wheeled units. Wheeled fire extinguishers shall be conspicuously located in a designated location.

SECTION 907
FIRE ALARM AND DETECTION SYSTEMS

[F] 907.1 General. This section covers the application, installation, performance and maintenance of fire alarm systems and their components.

[F] 907.1.1 Construction documents. *Construction documents* for fire alarm systems shall be of sufficient clarity to indicate the location, nature and extent of the work proposed and show in detail that it will conform to the provisions of this code, the *International Fire Code* and relevant laws, ordinances, rules and regulations, as determined by the fire code official.

[F] 907.1.2 Fire alarm shop drawings. Shop drawings for fire alarm systems shall be submitted for review and approval prior to system installation, and shall include, but not be limited to, all of the following where applicable to the system being installed:

1. A floor plan that indicates the use of all rooms.
2. Locations of alarm-initiating devices.
3. Locations of alarm notification appliances, including candela ratings for visible alarm notification appliances.
4. Design minimum audibility level for occupant notification.
5. Location of fire alarm control unit, transponders and notification power supplies.
6. Annunciators.
7. Power connection.
8. Battery calculations.
9. Conductor type and sizes.
10. Voltage drop calculations.
11. Manufacturers' data sheets indicating model numbers and listing information for equipment, devices and materials.
12. Details of ceiling height and construction.
13. The interface of fire safety control functions.
14. Classification of the supervising station.

[F] 907.1.3 Equipment. Systems and components shall be *listed* and *approved* for the purpose for which they are installed.

[F] 907.2 Where required—new buildings and structures. An *approved* fire alarm system installed in accordance with the provisions of this code and NFPA 72 shall be provided in new buildings and structures in accordance with Sections 907.2.1 through 907.2.23 and provide occupant notification in accordance with Section 907.5, unless other requirements are provided by another section of this code.

Not fewer than one manual fire alarm box shall be provided in an *approved* location to initiate a fire alarm signal for fire alarm systems employing automatic fire detectors or waterflow detection devices. Where other sections of this code allow elimination of fire alarm boxes due to sprinklers, a single fire alarm box shall be installed.

Exceptions:

1. The manual fire alarm box is not required for fire alarm systems dedicated to elevator recall control and supervisory service.
2. The manual fire alarm box is not required for Group R-2 occupancies unless required by the fire code official to provide a means for fire watch personnel to initiate an alarm during a sprinkler system impairment event. Where provided, the manual fire alarm box shall not be located in an area that is accessible to the public.

[F] 907.2.1 Group A. A manual fire alarm system that activates the occupant notification system in accordance with Section 907.5 shall be installed in Group A occupancies where the occupant load due to the assembly occupancy is 300 or more. Group A occupancies not separated from one another in accordance with Section 707.3.10 shall be considered as a single occupancy for the purposes of applying this section. Portions of Group E occupancies occupied for assembly purposes shall be provided with a fire alarm system as required for the Group E occupancy.

Exception: Manual fire alarm boxes are not required where the building is equipped throughout with an *automatic sprinkler system* installed in accordance with Section 903.3.1.1 and the occupant notification appliances will activate throughout the notification zones upon sprinkler water flow.

[F] 907.2.1.1 System initiation in Group A occupancies with an occupant load of 1,000 or more. Activation of the fire alarm in Group A occupancies with an *occupant load* of 1,000 or more shall initiate a signal

using an emergency voice/alarm communications system in accordance with Section 907.5.2.2.

Exception: Where *approved*, the prerecorded announcement is allowed to be manually deactivated for a period of time, not to exceed 3 minutes, for the sole purpose of allowing a live voice announcement from an *approved, constantly attended location.*

[F] 907.2.1.2 Emergency voice/alarm communication captions. Stadiums, arenas and grandstands required to caption audible public announcements shall be in accordance with Section 907.5.2.2.4.

[F] 907.2.2 Group B. A manual fire alarm system shall be installed in Group B occupancies where one of the following conditions exists:

1. The combined Group B *occupant load* of all floors is 500 or more.
2. The Group B *occupant load* is more than 100 persons above or below the lowest *level of exit discharge.*
3. The *fire area* contains an ambulatory care facility.

Exception: Manual fire alarm boxes are not required where the building is equipped throughout with an *automatic sprinkler system* installed in accordance with Section 903.3.1.1 and the occupant notification appliances will activate throughout the notification zones upon sprinkler water flow.

[F] 907.2.2.1 Ambulatory care facilities. *Fire areas* containing ambulatory care facilities shall be provided with an electronically supervised automatic smoke detection system installed within the ambulatory care facility and in public use areas outside of tenant spaces, including public *corridors* and elevator lobbies.

Exception: Buildings equipped throughout with an *automatic sprinkler system* in accordance with Section 903.3.1.1, provided the occupant notification appliances will activate throughout the notification zones upon sprinkler waterflow.

[F] 907.2.3 Group E. A manual fire alarm system that initiates the occupant notification signal utilizing an emergency voice/alarm communication system meeting the requirements of Section 907.5.2.2 and installed in accordance with Section 907.6 shall be installed in Group E occupancies. When *automatic sprinkler systems* or smoke detectors are installed, such systems or detectors shall be connected to the building fire alarm system.

Exceptions:

1. A manual fire alarm system is not required in Group E occupancies with an *occupant load* of 50 or less.
2. Emergency voice/alarm communication systems meeting the requirements of Section 907.5.2.2 and installed in accordance with Section 907.6 shall not be required in Group E occupancies with occupant loads of 100 or less, provided that activation of the manual fire alarm system initiates an *approved* occupant notification signal in accordance with Section 907.5.
3. Manual fire alarm boxes are not required in Group E occupancies where all of the following apply:
   - 3.1. Interior *corridors* are protected by smoke detectors.
   - 3.2. Auditoriums, cafeterias, gymnasiums and similar areas are protected by *heat detectors* or other *approved* detection devices.
   - 3.3. Shops and laboratories involving dusts or vapors are protected by *heat detectors* or other *approved* detection devices.
4. Manual fire alarm boxes shall not be required in Group E occupancies where all of the following apply:
   - 4.1. The building is equipped throughout with an *approved automatic sprinkler system* installed in accordance with Section 903.3.1.1.
   - 4.2. The emergency voice/alarm communication system will activate on sprinkler waterflow.
   - 4.3. Manual activation is provided from a normally occupied location.

[F] 907.2.4 Group F. A manual fire alarm system that activates the occupant notification system in accordance with Section 907.5 shall be installed in Group F occupancies where both of the following conditions exist:

1. The Group F occupancy is two or more *stories* in height.
2. The Group F occupancy has a combined *occupant load* of 500 or more above or below the lowest *level of exit discharge.*

Exception: Manual fire alarm boxes are not required where the building is equipped throughout with an *automatic sprinkler system* installed in accordance with Section 903.3.1.1 and the occupant notification appliances will activate throughout the notification zones upon sprinkler water flow.

[F] 907.2.5 Group H. A manual fire alarm system that activates the occupant notification system in accordance with Section 907.5 shall be installed in Group H-5 occupancies and in occupancies used for the manufacture of organic coatings. An automatic smoke detection system shall be installed for highly toxic gases, organic peroxides and oxidizers in accordance with Chapters 60, 62 and 63, respectively, of the *International Fire Code.*

[F] 907.2.6 Group I. A manual fire alarm system that activates the occupant notification system in accordance with Section 907.5 shall be installed in Group I occupancies. An automatic smoke detection system that activates the occupant notification system in accordance with Section

907.5 shall be provided in accordance with Sections 907.2.6.1, 907.2.6.2 and 907.2.6.3.3.

Exceptions:

1. Manual fire alarm boxes in sleeping units of Group I-1 and I-2 occupancies shall not be required at *exits* if located at all care providers' control stations or other constantly attended staff locations, provided such stations are visible and continuously accessible and that the distances of travel required in Section 907.4.2.1 are not exceeded.
2. Occupant notification systems are not required to be activated where private mode signaling installed in accordance with NFPA 72 is *approved* by the fire code official and staff evacuation responsibilities are included in the fire safety and evacuation plan required by Section 404 of the *International Fire Code*.

[F] 907.2.6.1 Group I-1. In Group I-1 occupancies, an automatic smoke detection system shall be installed in *corridors*, waiting areas open to *corridors* and *habitable spaces* other than *sleeping units* and kitchens. The system shall be activated in accordance with Section 907.5.

Exceptions:

1. For Group I-1 Condition 1 occupancies, smoke detection in *habitable spaces* is not required where the facility is equipped throughout with an *automatic sprinkler system* installed in accordance with Section 903.3.1.1.
2. Smoke detection is not required for exterior balconies.

[F] 907.2.6.1.1 Smoke alarms. Single- and multiple-station smoke alarms shall be installed in accordance with Section 907.2.11.

[F] 907.2.6.2 Group I-2. An automatic smoke detection system shall be installed in *corridors* in Group I-2 Condition 1 facilities and spaces permitted to be open to the *corridors* by Section 407.2. The system shall be activated in accordance with Section 907.4. Group I-2 Condition 2 occupancies shall be equipped with an automatic smoke detection system as required in Section 407.

Exceptions:

1. Corridor smoke detection is not required in smoke compartments that contain sleeping units where such units are provided with smoke detectors that comply with UL 268. Such detectors shall provide a visual display on the corridor side of each sleeping unit and shall provide an audible and visual alarm at the care providers' station attending each unit.
2. Corridor smoke detection is not required in smoke compartments that contain sleeping units where sleeping unit doors are equipped with automatic door-closing devices with integral smoke detectors on the unit sides installed in accordance with their listing, provided that the integral detectors perform the required alerting function.

[F] 907.2.6.3 Group I-3 occupancies. Group I-3 occupancies shall be equipped with a manual fire alarm system and automatic smoke detection system installed for alerting staff.

[F] 907.2.6.3.1 System initiation. Actuation of an automatic fire-extinguishing system, *automatic sprinkler system*, a manual fire alarm box or a fire detector shall initiate an approved fire alarm signal that automatically notifies staff.

[F] 907.2.6.3.2 Manual fire alarm boxes. Manual fire alarm boxes are not required to be located in accordance with Section 907.4.2 where the fire alarm boxes are provided at staff-attended locations having direct supervision over areas where manual fire alarm boxes have been omitted.

[F] 907.2.6.3.2.1 Manual fire alarm boxes in detainee areas. Manual fire alarm boxes are allowed to be locked in areas occupied by detainees, provided that staff members are present within the subject area and have keys readily available to operate the manual fire alarm boxes.

[F] 907.2.6.3.3 Automatic smoke detection system. An automatic smoke detection system shall be installed throughout resident housing areas, including *sleeping units* and contiguous day rooms, group activity spaces and other common spaces normally accessible to residents.

Exceptions:

1. Other *approved* smoke detection arrangements providing equivalent protection, including, but not limited to, placing detectors in exhaust ducts from cells or behind protective guards *listed* for the purpose, are allowed when necessary to prevent damage or tampering.
2. *Sleeping units* in Use Conditions 2 and 3 as described in Section 308.
3. Smoke detectors are not required in *sleeping units* with four or fewer occupants in smoke compartments that are equipped throughout with an *automatic sprinkler system* installed in accordance with Section 903.3.1.1.

[F] 907.2.7 Group M. A manual fire alarm system that activates the occupant notification system in accordance with Section 907.5 shall be installed in Group M occupancies where one of the following conditions exists:

1. The combined Group M *occupant load* of all floors is 500 or more persons.

2. The Group M *occupant load* is more than 100 persons above or below the lowest *level of exit discharge*.

Exceptions:

1. A manual fire alarm system is not required in *covered or open mall buildings* complying with Section 402.
2. Manual fire alarm boxes are not required where the building is equipped throughout with an *automatic sprinkler system* installed in accordance with Section 903.3.1.1 and the occupant notification appliances will automatically activate throughout the notification zones upon sprinkler water flow.

[F] 907.2.7.1 Occupant notification. During times that the building is occupied, the initiation of a signal from a manual fire alarm box or from a waterflow switch shall not be required to activate the alarm notification appliances when an alarm signal is activated at a *constantly attended location* from which evacuation instructions shall be initiated over an emergency voice/alarm communication system installed in accordance with Section 907.5.2.2.

[F] 907.2.8 Group R-1. Fire alarm systems and smoke alarms shall be installed in Group R-1 occupancies as required in Sections 907.2.8.1 through 907.2.8.3.

[F] 907.2.8.1 Manual fire alarm system. A manual fire alarm system that activates the occupant notification system in accordance with Section 907.5 shall be installed in Group R- 1 occupancies.

Exceptions:

1. A manual fire alarm system is not required in buildings not more than two *stories* in height where all individual *sleeping units* and contiguous *attic* and crawl spaces to those units are separated from each other and public or common areas by not less than 1-hour *fire partitions* and each individual *sleeping unit* has an *exit* directly to a *public way*, *egress court* or *yard*.
2. Manual fire alarm boxes are not required throughout the building where all of the following conditions are met:
   - 2.1. The building is equipped throughout with an *automatic sprinkler system* installed in accordance with Section 903.3.1.1 or 903.3.1.2.
   - 2.2. The notification appliances will activate upon sprinkler water flow.
   - 2.3. Not fewer than one manual fire alarm box is installed at an *approved* location.

[F] 907.2.8.2 Automatic smoke detection system. An automatic smoke detection system that activates the occupant notification system in accordance with Section 907.5 shall be installed throughout all interior *corridors* serving *sleeping units*.

Exception: An automatic smoke detection system is not required in buildings that do not have interior *corridors* serving *sleeping units* and where each *sleeping unit* has a *means of egress* door opening directly to an *exit* or to an exterior *exit access* that leads directly to an *exit*.

[F] 907.2.8.3 Smoke alarms. Single- and multiple-station smoke alarms shall be installed in accordance with Section 907.2.11.

[F] 907.2.9 Group R-2. Fire alarm systems and smoke alarms shall be installed in Group R-2 occupancies as required in Sections 907.2.9.1 through 907.2.9.3.

[F] 907.2.9.1 Manual fire alarm system. A manual fire alarm system that activates the occupant notification system in accordance with Section 907.5 shall be installed in Group R-2 occupancies where any of the following conditions apply:

1. Any *dwelling unit* or *sleeping unit* is located three or more *stories* above the lowest *level of exit discharge*.
2. Any *dwelling unit* or *sleeping unit* is located more than one *story* below the highest *level of exit discharge* of *exits* serving the *dwelling unit* or *sleeping unit*.
3. The building contains more than 16 *dwelling units* or *sleeping units*.

Exceptions:

1. A fire alarm system is not required in buildings not more than two *stories* in height where all *dwelling units* or *sleeping units* and contiguous *attic* and crawl spaces are separated from each other and public or common areas by not less than 1-hour *fire partitions* and each *dwelling unit* or *sleeping unit* has an *exit* directly to a *public way*, *egress court* or *yard*.
2. Manual fire alarm boxes are not required where the building is equipped throughout with an *automatic sprinkler system* installed in accordance with Section 903.3.1.1 or 903.3.1.2 and the occupant notification appliances will automatically activate throughout the notification zones upon a sprinkler water flow.
3. A fire alarm system is not required in buildings that do not have interior *corridors* serving *dwelling units* and are protected by an *approved automatic sprinkler system* installed in accordance with Section 903.3.1.1 or

903.3.1.2, provided that *dwelling units* either have a *means of egress* door opening directly to an exterior *exit access* that leads directly to the *exits* or are served by open-ended *corridors* designed in accordance with Section 1027.6, Exception 3.

[F] 907.2.9.2 Smoke alarms. Single- and multiple-station smoke alarms shall be installed in accordance with Section 907.2.11.

[F] 907.2.9.3 Group R-2 college and university buildings. An automatic smoke detection system that activates the occupant notification system in accordance with Section 907.5 shall be installed in Group R-2 occupancies operated by a college or university for student or staff housing in all of the following locations:

1. Common spaces outside of *dwelling units* and *sleeping units*.
2. Laundry rooms, mechanical equipment rooms and storage rooms.
3. All interior corridors serving *sleeping units* or *dwelling units*.

   Exception: An automatic smoke detection system is not required in buildings that do not have interior *corridors* serving *sleeping units* or *dwelling units* and where each *sleeping unit* or *dwelling unit* either has a *means of egress* door opening directly to an exterior *exit access* that leads directly to an *exit* or a *means of egress* door opening directly to an *exit*.

Required smoke alarms in *dwelling units* and *sleeping units* in Group R-2 occupancies operated by a college or university for student or staff housing shall be interconnected with the fire alarm system in accordance with NFPA 72.

[F] 907.2.10 Group R-4. Fire alarm systems and smoke alarms shall be installed in Group R-4 occupancies as required in Sections 907.2.10.1 through 907.2.10.3.

[F] 907.2.10.1 Manual fire alarm system. A manual fire alarm system that activates the occupant notification system in accordance with Section 907.5 shall be installed in Group R-4 occupancies.

Exceptions:

1. A manual fire alarm system is not required in buildings not more than two *stories* in height where all individual *sleeping units* and contiguous *attic* and crawl spaces to those units are separated from each other and public or common areas by not less than 1-hour *fire partitions* and each individual *sleeping unit* has an *exit* directly to a *public way*, *egress court* or *yard*.
2. Manual fire alarm boxes are not required throughout the building where all of the following conditions are met:
   2.1. The building is equipped throughout with an *automatic sprinkler system* installed in accordance with Section 903.3.1.1 or 903.3.1.2.
   2.2. The notification appliances will activate upon sprinkler water flow.
   2.3. Not fewer than one manual fire alarm box is installed at an *approved* location.
3. Manual fire alarm boxes in resident or patient sleeping areas shall not be required at *exits* where located at all nurses' control stations or other constantly attended staff locations, provided such stations are visible and continuously accessible and that the distances of travel required in Section 907.4.2.1 are not exceeded.

[F] 907.2.10.2 Automatic smoke detection system. An automatic smoke detection system that activates the occupant notification system in accordance with Section 907.5 shall be installed in *corridors*, waiting areas open to *corridors* and *habitable spaces* other than *sleeping units* and kitchens.

Exceptions:

1. Smoke detection in *habitable spaces* is not required where the facility is equipped throughout with an *automatic sprinkler system* installed in accordance with Section 903.3.1.1.
2. An automatic smoke detection system is not required in buildings that do not have interior *corridors* serving *sleeping units* and where each *sleeping unit* has a *means of egress* door opening directly to an *exit* or to an exterior *exit access* that leads directly to an *exit*.

[F] 907.2.10.3 Smoke alarms. Single- and multiple-station smoke alarms shall be installed in accordance with Section 907.2.11.

[F] 907.2.11 Single- and multiple-station smoke alarms. *Listed* single- and multiple-station smoke alarms complying with UL 217 shall be installed in accordance with Sections 907.2.11.1 through 907.2.11.6 and NFPA 72.

[F] 907.2.11.1 Group R-1. Single- or multiple-station smoke alarms shall be installed in all of the following locations in Group R-1:

1. In sleeping areas.
2. In every room in the path of the *means of egress* from the sleeping area to the door leading from the *sleeping unit*.
3. In each *story* within the *sleeping unit*, including basements. For *sleeping units* with split levels and without an intervening door between the adjacent levels, a smoke alarm installed on the upper level shall suffice for the adjacent lower level provided that the lower level is less than one full *story* below the upper level.

[F] 907.2.11.2 Groups R-2, R-3, R-4 and I-1. Single- or multiple-station smoke alarms shall be installed and maintained in Groups R-2, R-3, R-4 and I-1 regardless of *occupant load* at all of the following locations:

1. On the ceiling or wall outside of each separate sleeping area in the immediate vicinity of bedrooms.
2. In each room used for sleeping purposes.
3. In each *story* within a *dwelling unit*, including basements but not including crawl spaces and uninhabitable *attics*. In *dwellings* or *dwelling units* with split levels and without an intervening door between the adjacent levels, a smoke alarm installed on the upper level shall suffice for the adjacent lower level provided that the lower level is less than one full *story* below the upper level.

[F] 907.2.11.3 Installation near cooking appliances. Smoke alarms shall not be installed in the following locations unless this would prevent placement of a smoke alarm in a location required by Section 907.2.11.1 or 907.2.11.2:

1. Ionization smoke alarms shall not be installed less than 20 feet (6096 mm) horizontally from a permanently installed cooking appliance.
2. Ionization smoke alarms with an alarm-silencing switch shall not be installed less than 10 feet (3048 mm) horizontally from a permanently installed cooking appliance.
3. Photoelectric smoke alarms shall not be installed less than 6 feet (1829 mm) horizontally from a permanently installed cooking appliance.

[F] 907.2.11.4 Installation near bathrooms. Smoke alarms shall be installed not less than 3 feet (914 mm) horizontally from the door or opening of a bathroom that contains a bathtub or shower unless this would prevent placement of a smoke alarm required by Section 907.2.11.1 or 907.2.11.2.

[F] 907.2.11.5 Interconnection. Where more than one smoke alarm is required to be installed within an individual *dwelling unit* or *sleeping unit* in Group R or I-1 occupancies, the smoke alarms shall be interconnected in such a manner that the activation of one alarm will activate all of the alarms in the individual unit. Physical interconnection of smoke alarms shall not be required where listed wireless alarms are installed and all alarms sound upon activation of one alarm. The alarm shall be clearly audible in all bedrooms over background noise levels with all intervening doors closed.

[F] 907.2.11.6 Power source. In new construction, required smoke alarms shall receive their primary power from the building wiring where such wiring is served from a commercial source and shall be equipped with a battery backup. Smoke alarms with integral strobes that are not equipped with battery backup shall be connected to an emergency electrical system in accordance with Section 2702. Smoke alarms shall emit a signal when the batteries are low. Wiring shall be permanent and without a disconnecting switch other than as required for overcurrent protection.

Exception: Smoke alarms are not required to be equipped with battery backup where they are connected to an emergency electrical system that complies with Section 2702.

[F] 907.2.11.7 Smoke detection system. Smoke detectors listed in accordance with UL 268 and provided as part of the building *fire alarm system* shall be an acceptable alternative to single- and multiple-station *smoke alarms* and shall comply with the following:

1. The *fire alarm system* shall comply with all applicable requirements in Section 907.
2. Activation of a smoke detector in a *dwelling unit* or *sleeping unit* shall initiate alarm notification in the *dwelling unit* or *sleeping unit* in accordance with Section 907.5.2.
3. Activation of a smoke detector in a *dwelling unit* or *sleeping unit* shall not activate alarm notification appliances outside of the *dwelling unit* or *sleeping unit*, provided that a supervisory signal is generated and monitored in accordance with Section 907.6.6.

[F] 907.2.12 Special amusement buildings. An automatic smoke detection system shall be provided in *special amusement buildings* in accordance with Sections 907.2.12.1 through 907.2.12.3.

[F] 907.2.12.1 Alarm. Activation of any single smoke detector, the *automatic sprinkler system* or any other automatic fire detection device shall immediately activate an audible and visible alarm at the building at a constantly attended location from which emergency action can be initiated, including the capability of manual initiation of requirements in Section 907.2.12.2.

[F] 907.2.12.2 System response. The activation of two or more smoke detectors, a single smoke detector equipped with an alarm verification feature, the *automatic sprinkler system* or other *approved* fire detection device shall automatically do all of the following:

1. Cause illumination of the *means of egress* with light of not less than 1 footcandle (11 lux) at the walking surface level.
2. Stop any conflicting or confusing sounds and visual distractions.
3. Activate an *approved* directional *exit* marking that will become apparent in an emergency.
4. Activate a prerecorded message, audible throughout the *special amusement building*, instructing patrons to proceed to the nearest *exit*. Alarm signals used in conjunction with the prerecorded message shall produce a sound that is distinctive from other sounds used during normal operation.

[F] 907.2.12.3 Emergency voice/alarm communication system. An emergency voice/alarm communication system, which is also allowed to serve as a public

address system, shall be installed in accordance with Section 907.5.2.2 and be audible throughout the entire *special amusement building*.

[F] 907.2.13 High-rise buildings. High-rise buildings shall be provided with an automatic smoke detection system in accordance with Section 907.2.13.1, a fire department communication system in accordance with Section 907.2.13.2 and an emergency voice/alarm communication system in accordance with Section 907.5.2.2.

Exceptions:

1. Airport traffic control towers in accordance with Sections 412 and 907.2.22.
2. *Open parking garages* in accordance with Section 406.5.
3. Buildings with an occupancy in Group A-5 in accordance with Section 303.1.
4. Low-hazard special occupancies in accordance with Section 503.1.1.
5. Buildings with an occupancy in Group H-1, H-2 or H-3 in accordance with Section 415.
6. In Group I-1 and I-2 occupancies, the alarm shall sound at a *constantly attended location* and occupant notification shall be broadcast by the emergency voice/alarm communication system.

[F] 907.2.13.1 Automatic smoke detection. Automatic smoke detection in high-rise buildings shall be in accordance with Sections 907.2.13.1.1 and 907.2.13.1.2.

[F] 907.2.13.1.1 Area smoke detection. Area smoke detectors shall be provided in accordance with this section. Smoke detectors shall be connected to an automatic fire alarm system. The activation of any detector required by this section shall activate the emergency voice/alarm communication system in accordance with Section 907.5.2.2. In addition to smoke detectors required by Sections 907.2.1 through 907.2.10, smoke detectors shall be located as follows:

1. In each mechanical equipment, electrical, transformer, telephone equipment or similar room that is not provided with sprinkler protection.
2. In each elevator machine room, machinery space, control room and control space and in elevator lobbies.

[M] 907.2.13.1.2 Duct smoke detection. Duct smoke detectors complying with Section 907.3.1 shall be located as follows:

1. In the main return air and exhaust air plenum of each air-conditioning system having a capacity greater than 2,000 cubic feet per minute (cfm) (0.94 m^3/s). Such detectors shall be located in a serviceable area downstream of the last duct inlet.
2. At each connection to a vertical duct or riser serving two or more stories from a return air duct or plenum of an air-conditioning system. In Group R-1 and R-2 occupancies, a smoke detector is allowed to be used in each return air riser carrying not more than 5,000 cfm (2.4 m^3/s) and serving not more than 10 air-inlet openings.

[F] 907.2.13.2 Fire department communication system. Where a wired communication system is *approved* in lieu of an emergency responder radio coverage system in accordance with Section 510 of the *International Fire Code*, the wired fire department communication system shall be designed and installed in accordance with NFPA 72 and shall operate between a fire command center complying with Section 911, elevators, elevator lobbies, emergency and standby power rooms, fire pump rooms, *areas of refuge* and inside *interior exit stairways*. The fire department communication device shall be provided at each floor level within the *interior exit stairway*.

[F] 907.2.14 Atriums connecting more than two stories. A fire alarm system shall be installed in occupancies with an atrium that connects more than two *stories*, with smoke detection installed in locations required by a rational analysis in Section 909.4 and in accordance with the system operation requirements in Section 909.17. The system shall be activated in accordance with Section 907.5. Such occupancies in Group A, E or M shall be provided with an emergency voice/alarm communication system complying with the requirements of Section 907.5.2.2.

[F] 907.2.15 High-piled combustible storage areas. An automatic smoke detection system shall be installed throughout high-piled combustible storage areas where required by Section 3206.5 of the *International Fire Code*.

[F] 907.2.16 Aerosol storage uses. Aerosol storage rooms and general-purpose warehouses containing aerosols shall be provided with an *approved* manual fire alarm system where required by the *International Fire Code*.

[F] 907.2.17 Lumber, wood structural panel and veneer mills. Lumber, wood structural panel and veneer mills shall be provided with a manual fire alarm system.

[F] 907.2.18 Underground buildings with smoke control systems. Where a smoke control system is installed in an underground building in accordance with this code, automatic smoke detectors shall be provided in accordance with Section 907.2.18.1.

[F] 907.2.18.1 Smoke detectors. Not fewer than one smoke detector *listed* for the intended purpose shall be installed in all of the following areas:

1. Mechanical equipment, electrical, transformer, telephone equipment, elevator machine or similar rooms.
2. Elevator lobbies.
3. The main return and exhaust air plenum of each air-conditioning system serving more than one

story and located in a serviceable area downstream of the last duct inlet.

4. Each connection to a vertical duct or riser serving two or more floors from return air ducts or plenums of heating, ventilating and air-conditioning systems, except that in Group R occupancies, a *listed* smoke detector is allowed to be used in each return air riser carrying not more than 5,000 cfm (2.4 m^3/s) and serving not more than 10 air-inlet openings.

[F] 907.2.18.2 Alarm required. Activation of the smoke control system shall activate an audible alarm at a *constantly attended location.*

[F] 907.2.19 Deep underground buildings. Where the lowest level of a structure is more than 60 feet (18 288 mm) below the finished floor of the lowest *level of exit discharge,* the structure shall be equipped throughout with a manual fire alarm system, including an emergency voice/alarm communication system installed in accordance with Section 907.5.2.2.

[F] 907.2.20 Covered and open mall buildings. Where the total floor area exceeds 50,000 square feet (4645 m^2) within either a covered mall building or within the perimeter line of an open mall building, an emergency voice/alarm communication system shall be provided. Emergency voice/alarm communication systems serving a mall, required or otherwise, shall be accessible to the fire department. The system shall be provided in accordance with Section 907.5.2.2.

[F] 907.2.21 Residential aircraft hangars. Not fewer than one single-station smoke alarm shall be installed within a residential aircraft hangar as defined in Chapter 2 and shall be interconnected into the residential smoke alarm or other sounding device to provide an alarm that will be audible in all sleeping areas of the *dwelling.*

[F] 907.2.22 Airport traffic control towers. An automatic smoke detection system that activates the occupant notification system in accordance with Section 907.5 shall be provided in airport control towers in accordance with Sections 907.2.22.1 and 907.2.22.2.

Exception: Audible appliances shall not be installed within the control tower cab.

[F] 907.2.22.1 Airport traffic control towers with multiple exits and automatic sprinklers. Airport traffic control towers with multiple *exits* and equipped throughout with an *automatic sprinkler system* in accordance with Section 903.3.1.1 shall be provided with smoke detectors in all of the following locations:

1. Airport traffic control cab.
2. Electrical and mechanical equipment rooms.
3. Airport terminal radar and electronics rooms.
4. Outside each opening into *interior exit stairways.*
5. Along the single *means of egress* permitted from observation levels.
6. Outside each opening into the single *means of egress* permitted from observation levels.

[F] 907.2.22.2 Other airport traffic control towers. Airport traffic control towers with a single *exit* or where sprinklers are not installed throughout shall be provided with smoke detectors in all of the following locations:

1. Airport traffic control cab.
2. Electrical and mechanical equipment rooms.
3. Airport terminal radar and electronics rooms.
4. Office spaces incidental to the tower operation.
5. Lounges for employees, including sanitary facilities.
6. *Means of egress.*
7. Accessible utility shafts.

[F] 907.2.23 Battery rooms. An automatic smoke detection system shall be installed in areas containing stationary storage battery systems with a liquid capacity of more than 50 gallons (189 L).

[F] 907.3 Fire safety functions. Automatic fire detectors utilized for the purpose of performing fire safety functions shall be connected to the building's fire alarm control unit where a fire alarm system is required by Section 907.2. Detectors shall, upon actuation, perform the intended function and activate the alarm notification appliances or activate a visible and audible supervisory signal at a *constantly attended location.* In buildings not equipped with a fire alarm system, the automatic fire detector shall be powered by normal electrical service and, upon actuation, perform the intended function. The detectors shall be located in accordance with NFPA 72.

[F] 907.3.1 Duct smoke detectors. Smoke detectors installed in ducts shall be *listed* for the air velocity, temperature and humidity present in the duct. Duct smoke detectors shall be connected to the building's fire alarm control unit when a fire alarm system is required by Section 907.2. Activation of a duct smoke detector shall initiate a visible and audible supervisory signal at a *constantly attended location* and shall perform the intended fire safety function in accordance with this code and the *International Mechanical Code.* In facilities that are required to be monitored by a supervising station, duct smoke detectors shall report only as a supervisory signal and not as a fire alarm. They shall not be used as a substitute for required open area detection.

Exceptions:

1. The supervisory signal at a *constantly attended location* is not required where duct smoke detectors activate the building's alarm notification appliances.
2. In occupancies not required to be equipped with a fire alarm system, actuation of a smoke detector shall activate a visible and an audible signal in an *approved* location. Smoke detector trouble conditions shall activate a visible or audible signal in

an *approved* location and shall be identified as air duct detector trouble.

[F] 907.3.2 Delayed egress locks. Where delayed egress locks are installed on *means of egress* doors in accordance with Section 1010.1.9.7, an automatic smoke or heat detection system shall be installed as required by that section.

[F] 907.3.3 Elevator emergency operation. Automatic fire detectors installed for elevator emergency operation shall be installed in accordance with the provisions of ASME A17.1 and NFPA 72.

[F] 907.3.4 Wiring. The wiring to the auxiliary devices and equipment used to accomplish the fire safety functions shall be monitored for integrity in accordance with NFPA 72.

[F] 907.4 Initiating devices. Where manual or automatic alarm initiation is required as part of a fire alarm system, the initiating devices shall be installed in accordance with Sections 907.4.1 through 907.4.3.1.

[F] 907.4.1 Protection of fire alarm control unit. In areas that are not continuously occupied, a single smoke detector shall be provided at the location of each fire alarm control unit, notification appliance circuit power extenders, and supervising station transmitting equipment.

Exception: Where ambient conditions prohibit installation of a smoke detector, a *heat detector* shall be permitted.

[F] 907.4.2 Manual fire alarm boxes. Where a manual fire alarm system is required by another section of this code, it shall be activated by fire alarm boxes installed in accordance with Sections 907.4.2.1 through 907.4.2.6.

[F] 907.4.2.1 Location. Manual fire alarm boxes shall be located not more than 5 feet (1524 mm) from the entrance to each *exit*. In buildings not protected by an *automatic sprinkler system* in accordance with Section 903.3.1.1 or 903.3.1.2, additional manual fire alarm boxes shall be located so that the *exit access* travel distance to the nearest box does not exceed 200 feet (60 960 mm).

[F] 907.4.2.2 Height. The height of the manual fire alarm boxes shall be not less than 42 inches (1067 mm) and not more than 48 inches (1372 mm) measured vertically, from the floor level to the activating handle or lever of the box.

[F] 907.4.2.3 Color. Manual fire alarm boxes shall be red in color.

[F] 907.4.2.4 Signs. Where fire alarm systems are not monitored by a supervising station, an *approved* permanent sign shall be installed adjacent to each manual fire alarm box that reads: WHEN ALARM SOUNDS CALL FIRE DEPARTMENT.

Exception: Where the manufacturer has permanently provided this information on the manual fire alarm box.

[F] 907.4.2.5 Protective covers. The fire code official is authorized to require the installation of *listed* manual fire alarm box protective covers to prevent malicious false alarms or to provide the manual fire alarm box with protection from physical damage. The protective cover shall be transparent or red in color with a transparent face to permit visibility of the manual fire alarm box. Each cover shall include proper operating instructions. A protective cover that emits a local alarm signal shall not be installed unless *approved*. Protective covers shall not project more than that permitted by Section 1003.3.3.

[F] 907.4.2.6 Unobstructed and unobscured. Manual fire alarm boxes shall be accessible, unobstructed, unobscured and visible at all times.

[F] 907.4.3 Automatic smoke detection. Where an automatic smoke detection system is required it shall utilize smoke detectors unless ambient conditions prohibit such an installation. In spaces where smoke detectors cannot be utilized due to ambient conditions, *approved* automatic *heat detectors* shall be permitted.

[F] 907.4.3.1 Automatic sprinkler system. For conditions other than specific fire safety functions noted in Section 907.3, in areas where ambient conditions prohibit the installation of smoke detectors, an *automatic sprinkler system* installed in such areas in accordance with Section 903.3.1.1 or 903.3.1.2 and that is connected to the fire alarm system shall be *approved* as automatic heat detection.

[F] 907.5 Occupant notification systems. A fire alarm system shall annunciate at the fire alarm control unit and shall initiate occupant notification upon activation, in accordance with Sections 907.5.1 through 907.5.2.3.3. Where a fire alarm system is required by another section of this code, it shall be activated by:

1. Automatic fire detectors.
2. *Automatic sprinkler system* waterflow devices.
3. Manual fire alarm boxes.
4. Automatic fire-extinguishing systems.

Exception: Where notification systems are allowed elsewhere in Section 907 to annunciate at a *constantly attended location.*

[F] 907.5.1 Presignal feature. A presignal feature shall not be installed unless *approved* by the fire code official and the fire department. Where a presignal feature is provided, a signal shall be annunciated at a *constantly attended location approved* by the fire department so that occupant notification can be activated in the event of fire or other emergency.

[F] 907.5.2 Alarm notification appliances. Alarm notification appliances shall be provided and shall be *listed* for their purpose.

[F] 907.5.2.1 Audible alarms. Audible alarm notification appliances shall be provided and emit a distinctive

sound that is not to be used for any purpose other than that of a fire alarm.

Exceptions:

1. Audible alarm notification appliances are not required in critical care areas of Group I-2 Condition 2 occupancies that are in compliance with Section 907.2.6, Exception 2.
2. A visible alarm notification appliance installed in a nurses' control station or other continuously attended staff location in a Group I-2 Condition 2 suite shall be an acceptable alternative to the installation of audible alarm notification appliances throughout the suite in Group I-2 Condition 2 occupancies that are in compliance with Section 907.2.6, Exception 2.
3. Where provided, audible notification appliances located in each occupant evacuation elevator lobby in accordance with Section 3008.9.1 shall be connected to a separate notification zone for manual paging only.

[F] 907.5.2.1.1 Average sound pressure. The audible alarm notification appliances shall provide a sound pressure level of 15 decibels (dBA) above the average ambient sound level or 5 dBA above the maximum sound level having a duration of not less than 60 seconds, whichever is greater, in every occupiable space within the building.

[F] 907.5.2.1.2 Maximum sound pressure. The maximum sound pressure level for audible alarm notification appliances shall be 110 dBA at the minimum hearing distance from the audible appliance. Where the average ambient noise is greater than 95 dBA, visible alarm notification appliances shall be provided in accordance with NFPA 72 and audible alarm notification appliances shall not be required.

[F] 907.5.2.2 Emergency voice/alarm communication systems. Emergency voice/alarm communication systems required by this code shall be designed and installed in accordance with NFPA 72. The operation of any automatic fire detector, sprinkler waterflow device or manual fire alarm box shall automatically sound an alert tone followed by voice instructions giving *approved* information and directions for a general or staged evacuation in accordance with the building's fire safety and evacuation plans required by Section 404 of the *International Fire Code*. In high-rise buildings, the system shall operate on at least the alarming floor, the floor above and the floor below. Speakers shall be provided throughout the building by paging zones. At a minimum, paging zones shall be provided as follows:

1. Elevator groups.
2. *Interior exit stairways.*
3. Each floor.
4. *Areas of refuge* as defined in Chapter 2.

Exception: In Group I-1 and I-2 occupancies, the alarm shall sound in a constantly attended area and a general occupant notification shall be broadcast over the overhead page.

[F] 907.5.2.2.1 Manual override. A manual override for emergency voice communication shall be provided on a selective and all-call basis for all paging zones.

[F] 907.5.2.2.2 Live voice messages. The emergency voice/alarm communication system shall have the capability to broadcast live voice messages by paging zones on a selective and all-call basis.

[F] 907.5.2.2.3 Alternate uses. The emergency voice/alarm communication system shall be allowed to be used for other announcements, provided the manual fire alarm use takes precedence over any other use.

[F] 907.5.2.2.4 Emergency voice/alarm communication captions. Where stadiums, arenas and grandstands are required to caption audible public announcements in accordance with Section 1108.2.7.3, the emergency/voice alarm communication system shall be captioned. Prerecorded or live emergency captions shall be from an *approved* location constantly attended by personnel trained to respond to an emergency.

[F] 907.5.2.2.5 Emergency power. Emergency voice/alarm communications systems shall be provided with emergency power in accordance with Section 2702. The system shall be capable of powering the required load for a duration of not less than 24 hours, as required in NFPA 72.

[F] 907.5.2.3 Visible alarms. Visible alarm notification appliances shall be provided in accordance with Sections 907.5.2.3.1 through 907.5.2.3.3.

Exceptions:

1. Visible alarm notification appliances are not required in *alterations*, except where an existing fire alarm system is upgraded or replaced, or a new fire alarm system is installed.
2. Visible alarm notification appliances shall not be required in *exits* as defined in Chapter 2.
3. Visible alarm notification appliances shall not be required in elevator cars.
4. Visual alarm notification appliances are not required in critical care areas of Group I-2 Condition 2 occupancies that are in compliance with Section 907.2.6, Exception 2.

[F] 907.5.2.3.1 Public use areas and common use areas. Visible alarm notification appliances shall be provided in *public use areas* and *common use areas*.

Exception: Where employee work areas have audible alarm coverage, the notification appli-

ance circuits serving the employee work areas shall be initially designed with not less than 20-percent spare capacity to account for the potential of adding visible notification appliances in the future to accommodate hearing-impaired employee(s).

[F] 907.5.2.3.2 Groups I-1 and R-1. Group I-1 and R-1 *dwelling units* or *sleeping units* in accordance with Table 907.5.2.3.2 shall be provided with a visible alarm notification appliance, activated by both the in-room smoke alarm and the building fire alarm system.

[F] TABLE 907.5.2.3.2
VISIBLE ALARMS

NUMBER OF SLEEP UNITS	SLEEPING ACCOMMODATIONS WITH VISIBLE ALARMS
6 to 25	2
26 to 50	4
51 to 75	7
76 to 100	9
101 to 150	12
151 to 200	14
201 to 300	17
301 to 400	20
401 to 500	22
501 to 1,000	5% of total
1,001 and over	50 plus 3 for each 100 over 1,000

[F] 907.5.2.3.3 Group R-2. In Group R-2 occupancies required by Section 907 to have a fire alarm system, all *dwelling units* and *sleeping units* shall be provided with the capability to support visible alarm notification appliances in accordance with Chapter 10 of ICC A117.1. Such capability shall be permitted to include the potential for future interconnection of the building fire alarm system with the unit smoke alarms, replacement of audible appliances with combination audible/visible appliances, or future extension of the existing wiring from the unit smoke alarm locations to required locations for visible appliances.

[F] 907.6 Installation and monitoring. A fire alarm system shall be installed and monitored in accordance with Sections 907.6.1 through 907.6.6.2 and NFPA 72.

[F] 907.6.1 Wiring. Wiring shall comply with the requirements of NFPA 70 and NFPA 72. Wireless protection systems utilizing radio-frequency transmitting devices shall comply with the special requirements for supervision of low-power wireless systems in NFPA 72.

[F] 907.6.2 Power supply. The primary and secondary power supply for the fire alarm system shall be provided in accordance with NFPA 72.

Exception: Back-up power for single-station and multiple-station smoke alarms as required in Section 907.2.11.6.

[F] 907.6.3 Initiating device identification. The fire alarm system shall identify the specific initiating device address, location, device type, floor level where applicable and status including indication of normal, alarm, trouble and supervisory status, as appropriate.

Exceptions:

1. Fire alarm systems in single-story buildings less than 22,500 square feet (2090 m^2) in area.
2. Fire alarm systems that only include manual fire alarm boxes, waterflow initiating devices and not more than 10 additional alarm-initiating devices.
3. Special initiating devices that do not support individual device identification.
4. Fire alarm systems or devices that are replacing existing equipment.

[F] 907.6.3.1 Annunciation. The initiating device status shall be annunciated at an *approved* on-site location.

[F] 907.6.4 Zones. Each floor shall be zoned separately and a zone shall not exceed 22,500 square feet (2090 m^2). The length of any zone shall not exceed 300 feet (91 440 mm) in any direction.

Exception: *Automatic sprinkler system* zones shall not exceed the area permitted by NFPA 13.

[F] 907.6.4.1 Zoning indicator panel. A zoning indicator panel and the associated controls shall be provided in an *approved* location. The visual zone indication shall lock in until the system is reset and shall not be canceled by the operation of an audible-alarm silencing switch.

[F] 907.6.4.2 High-rise buildings. In high-rise buildings, a separate zone by floor shall be provided for each of the following types of alarm-initiating devices where provided:

1. Smoke detectors.
2. Sprinkler waterflow devices.
3. Manual fire alarm boxes.
4. Other *approved* types of automatic fire detection devices or suppression systems.

[F] 907.6.5 Access. Access shall be provided to each fire alarm device and notification appliance for periodic inspection, maintenance and testing.

[F] 907.6.6 Monitoring. Fire alarm systems required by this chapter or by the *International Fire Code* shall be monitored by an *approved* supervising station in accordance with NFPA 72.

Exception: Monitoring by a supervising station is not required for:

1. Single- and multiple-station smoke alarms required by Section 907.2.11.
2. Smoke detectors in Group I-3 occupancies.

3. *Automatic sprinkler systems* in one- and two-family dwellings.

[F] 907.6.6.1 Automatic telephone-dialing devices. Automatic telephone-dialing devices used to transmit an emergency alarm shall not be connected to any fire department telephone number unless *approved* by the fire chief.

[F] 907.6.6.2 Termination of monitoring service. Termination of fire alarm monitoring services shall be in accordance with Section 901.9 of the *International Fire Code*.

[F] 907.7 Acceptance tests and completion. Upon completion of the installation, the fire alarm system and all fire alarm components shall be tested in accordance with NFPA 72.

[F] 907.7.1 Single- and multiple-station alarm devices. When the installation of the alarm devices is complete, each device and interconnecting wiring for multiple-station alarm devices shall be tested in accordance with the smoke alarm provisions of NFPA 72.

[F] 907.7.2 Record of completion. A record of completion in accordance with NFPA 72 verifying that the system has been installed and tested in accordance with the *approved* plans and specifications shall be provided.

[F] 907.7.3 Instructions. Operating, testing and maintenance instructions and record drawings ("as-builts") and equipment specifications shall be provided at an *approved* location.

[F] 907.8 Inspection, testing and maintenance. The maintenance and testing schedules and procedures for fire alarm and fire detection systems shall be in accordance with Section 907.8 of the *International Fire Code*.

SECTION 908
EMERGENCY ALARM SYSTEMS

[F] 908.1 Group H occupancies. Emergency alarms for the detection and notification of an emergency condition in Group H occupancies shall be provided in accordance with Section 415.5.

[F] 908.2 Group H-5 occupancy. Emergency alarms for notification of an emergency condition in an HPM facility shall be provided as required in Section 415.11.3.5. A continuous gas detection system shall be provided for HPM gases in accordance with Section 415.11.7.

[F] 908.3 Highly toxic and toxic materials. A gas detection system shall be provided to detect the presence of *highly toxic* or *toxic* gas at or below the permissible exposure limit (PEL) or ceiling limit of the gas for which detection is provided. The system shall be capable of monitoring the discharge from the treatment system at or below one-half the immediately dangerous to life and health (IDLH) limit.

Exception: A gas detection system is not required for *toxic* gases when the physiological warning threshold level for the gas is at a level below the accepted PEL for the gas.

[F] 908.3.1 Alarms. The gas detection system shall initiate a local alarm and transmit a signal to a constantly attended control station when a short-term hazard condition is detected. The alarm shall be both visible and audible and shall provide warning both inside and outside the area where gas is detected. The audible alarm shall be distinct from all other alarms.

Exception: Signal transmission to a constantly attended control station is not required when not more than one cylinder of *highly toxic* or *toxic* gas is stored.

[F] 908.3.2 Shutoff of gas supply. The gas detection system shall automatically close the shutoff valve at the source on gas supply piping and tubing related to the system being monitored for whichever gas is detected.

Exception: Automatic shutdown is not required for reactors utilized for the production of *highly toxic* or *toxic* compressed gases where such reactors are:

1. Operated at pressures less than 15 pounds per square inch gauge (psig) (103.4 kPa).
2. Constantly attended.
3. Provided with readily accessible emergency shutoff valves.

[F] 908.3.3 Valve closure. The automatic closure of shutoff valves shall be in accordance with the following:

1. When the gas-detection sampling point initiating the gas detection system alarm is within a gas cabinet or exhausted enclosure, the shutoff valve in the gas cabinet or exhausted enclosure for the specific gas detected shall automatically close.
2. Where the gas-detection sampling point initiating the gas detection system alarm is within a gas room and compressed gas containers are not in gas cabinets or exhausted enclosures, the shutoff valves on all gas lines for the specific gas detected shall automatically close.
3. Where the gas-detection sampling point initiating the gas detection system alarm is within a piping distribution manifold enclosure, the shutoff valve for the compressed container of specific gas detected supplying the manifold shall automatically close.

Exception: When the gas-detection sampling point initiating the gas detection system alarm is at a use location or within a gas valve enclosure of a branch line downstream of a piping distribution manifold, the shutoff valve in the gas valve enclosure for the branch line located in the piping distribution manifold enclosure shall automatically close.

[F] 908.4 Ozone gas-generator rooms. Ozone gas-generator rooms shall be equipped with a continuous gas detection system that will shut off the generator and sound a local alarm when concentrations above the PEL occur.

[F] 908.5 Repair garages. A flammable-gas detection system shall be provided in repair garages for vehicles fueled by nonodorized gases in accordance with Section 406.8.5.

[F] 908.6 Refrigerant detector. Machinery rooms shall contain a refrigerant detector with an audible and visual alarm. The detector, or a sampling tube that draws air to the detector, shall be located in an area where refrigerant from a leak will concentrate. The alarm shall be actuated at a value not greater than the corresponding TLV-TWA values for the refrigerant classification shown in the *International Mechanical Code* for the refrigerant classification. Detectors and alarms shall be placed in *approved* locations. The detector shall transmit a signal to an *approved* location.

*

[F] 908.7 Carbon dioxide (CO_2) systems. Emergency alarm systems in accordance with Section 5307.5.2 of the *International Fire Code* shall be provided where required for compliance with Section 5307.5 of the *International Fire Code*.

SECTION 909
SMOKE CONTROL SYSTEMS

[F] 909.1 Scope and purpose. This section applies to mechanical or passive smoke control systems where they are required by other provisions of this code. The purpose of this section is to establish minimum requirements for the design, installation and acceptance testing of smoke control systems that are intended to provide a tenable environment for the evacuation or relocation of occupants. These provisions are not intended for the preservation of contents, the timely restoration of operations or for assistance in fire suppression or overhaul activities. Smoke control systems regulated by this section serve a different purpose than the smoke- and heat-venting provisions found in Section 910. Mechanical smoke control systems shall not be considered exhaust systems under Chapter 5 of the *International Mechanical Code*.

[F] 909.2 General design requirements. Buildings, structures or parts thereof required by this code to have a smoke control system or systems shall have such systems designed in accordance with the applicable requirements of Section 909 and the generally accepted and well-established principles of engineering relevant to the design. The *construction documents* shall include sufficient information and detail to adequately describe the elements of the design necessary for the proper implementation of the smoke control systems. These documents shall be accompanied by sufficient information and analysis to demonstrate compliance with these provisions.

[F] 909.3 Special inspection and test requirements. In addition to the ordinary inspection and test requirements that buildings, structures and parts thereof are required to undergo, smoke control systems subject to the provisions of Section 909 shall undergo *special inspections* and tests sufficient to verify the proper commissioning of the smoke control design in its final installed condition. The design submission accompanying the *construction documents* shall clearly detail procedures and methods to be used and the items subject to such inspections and tests. Such commissioning shall be in accordance with generally accepted engineering practice and, where possible, based on published standards for the particular testing involved. The special inspections and tests required by this section shall be conducted under the same terms in Section 1704.

[F] 909.4 Analysis. A rational analysis supporting the types of smoke control systems to be employed, their methods of operation, the systems supporting them and the methods of construction to be utilized shall accompany the submitted *construction documents* and shall include, but not be limited to, the items indicated in Sections 909.4.1 through 909.4.7.

[F] 909.4.1 Stack effect. The system shall be designed such that the maximum probable normal or reverse stack effect will not adversely interfere with the system's capabilities. In determining the maximum probable stack effect, altitude, elevation, weather history and interior temperatures shall be used.

[F] 909.4.2 Temperature effect of fire. Buoyancy and expansion caused by the design fire in accordance with Section 909.9 shall be analyzed. The system shall be designed such that these effects do not adversely interfere with the system's capabilities.

[F] 909.4.3 Wind effect. The design shall consider the adverse effects of wind. Such consideration shall be consistent with the wind-loading provisions of Chapter 16.

[F] 909.4.4 HVAC systems. The design shall consider the effects of the heating, ventilating and air-conditioning (HVAC) systems on both smoke and fire transport. The analysis shall include all permutations of systems status. The design shall consider the effects of the fire on the HVAC systems.

[F] 909.4.5 Climate. The design shall consider the effects of low temperatures on systems, property and occupants. Air inlets and exhausts shall be located so as to prevent snow or ice blockage.

[F] 909.4.6 Duration of operation. All portions of active or engineered smoke control systems shall be capable of continued operation after detection of the fire event for a period of not less than either 20 minutes or 1.5 times the calculated egress time, whichever is greater.

909.4.7 Smoke control system interaction. The design shall consider the interaction effects of the operation of multiple smoke control systems for all design scenarios.

[F] 909.5 Smoke barrier construction. *Smoke barriers* required for passive smoke control and a smoke control system using the pressurization method shall comply with Section 709, and shall be constructed and sealed to limit leakage areas exclusive of protected openings. The maximum allowable leakage area shall be the aggregate area calculated using the following leakage area ratios:

1. Walls $A/A_w = 0.00100$
2. Interior *exit stairways* and *ramps* and *exit passageways*: $A/A_w = 0.00035$
3. Enclosed *exit access stairways* and *ramps* and all other shafts: $A/A_w = 0.00150$
4. Floors and roofs: $A/A_F = 0.00050$

where:

A = Total leakage area, square feet (m^2).

A_F = Unit floor or roof area of barrier, square feet (m^2).

A_w = Unit wall area of barrier, square feet (m^2).

The leakage area ratios shown do not include openings due to gaps around doors and operable windows. The total leakage area of the *smoke barrier* shall be determined in accordance with Section 909.5.1 and tested in accordance with Section 909.5.2.

[F] 909.5.1 Total leakage area. Total leakage area of the barrier is the product of the *smoke barrier* gross area multiplied by the allowable leakage area ratio, plus the area of other openings such as gaps around doors and operable windows.

[F] 909.5.2 Testing of leakage area. Compliance with the maximum total leakage area shall be determined by achieving the minimum air pressure difference across the barrier with the system in the smoke control mode for mechanical smoke control systems utilizing the pressurization method. Compliance with the maximum total leakage area of passive smoke control systems shall be verified through methods such as door fan testing or other methods, as *approved* by the fire code official.

[F] 909.5.3 Opening protection. Openings in *smoke barriers* shall be protected by automatic-closing devices actuated by the required controls for the mechanical smoke control system. Door openings shall be protected by *fire door assemblies* complying with Section 716.5.3.

Exceptions:

1. Passive smoke control systems with automatic-closing devices actuated by spot-type smoke detectors *listed* for releasing service installed in accordance with Section 907.3.
2. Fixed openings between smoke zones that are protected utilizing the airflow method.
3. In Group I-1 Condition 2, Group I-2 and ambulatory care facilities, where a pair of opposite-swinging doors are installed across a corridor in accordance with Section 909.5.3.1, the doors shall not be required to be protected in accordance with Section 716. The doors shall be close-fitting within operational tolerances and shall not have a center mullion or undercuts in excess of $^3/_4$ inch (19.1 mm), louvers or grilles. The doors shall have head and jamb stops and astragals or rabbets at meeting edges and, where permitted by the door manufacturer's listing, positive-latching devices are not required.
4. In Group I-2 and ambulatory care facilities, where such doors are special-purpose horizontal sliding, accordion or folding door assemblies installed in accordance with Section 1010.1.4.3 and are automatic closing by smoke detection in accordance with Section 716.5.9.3.
5. Group I-3.
6. Openings between smoke zones with clear ceiling heights of 14 feet (4267 mm) or greater and bank-down capacity of greater than 20 minutes as determined by the design fire size.

909.5.3.1 Group I-1 Condition 2; Group I-2 and ambulatory care facilities. In Group I-1 Condition 2, Group I-2 and *ambulatory care facilities*, where doors are installed across a *corridor*, the doors shall be automatic closing by smoke detection in accordance with Section 716.5.9.3 and shall have a vision panel with fire protection-rated glazing materials in fire protection-rated frames, the area of which shall not exceed that tested.

[F] 909.5.3.2 Ducts and air transfer openings. Ducts and air transfer openings are required to be protected with a minimum Class II, 250°F (121°C) *smoke damper* complying with Section 717.

[F] 909.6 Pressurization method. The primary mechanical means of controlling smoke shall be by pressure differences across smoke barriers. Maintenance of a tenable environment is not required in the smoke control zone of fire origin.

[F] 909.6.1 Minimum pressure difference. The minimum pressure difference across a *smoke barrier* shall be 0.05-inch water gage (0.0124 kPa) in fully sprinklered buildings.

In buildings permitted to be other than fully sprinklered, the smoke control system shall be designed to achieve pressure differences not less than two times the maximum calculated pressure difference produced by the design fire.

[F] 909.6.2 Maximum pressure difference. The maximum air pressure difference across a *smoke barrier* shall be determined by required door-opening or closing forces. The actual force required to open *exit* doors when the system is in the smoke control mode shall be in accordance with Section 1010.1.3. Opening and closing forces for other doors shall be determined by standard engineering methods for the resolution of forces and reactions. The calculated force to set a side-hinged, swinging door in motion shall be determined by:

$$F = F_{dc} + K(WA\Delta P)/2(W\text{-}d) \qquad \textbf{(Equation 9-1)}$$

where:

A = Door area, square feet (m^2).

d = Distance from door handle to latch edge of door, feet (m).

F = Total door opening force, pounds (N).

F_{dc} = Force required to overcome closing device, pounds (N).

K = Coefficient 5.2 (1.0).

W = Door width, feet (m).

ΔP = Design pressure difference, inches of water (Pa).

[F] 909.6.3 Pressurized stairways and elevator hoistways. Where stairways or elevator hoistways are pressurized, such pressurization systems shall comply with Section 909 as smoke control systems, in addition to the requirements of Sections 909.20 of this code and 909.21 of the *International Fire Code*.

[F] 909.7 Airflow design method. Where *approved* by the fire code official, smoke migration through openings fixed in

a permanently open position, which are located between smoke control zones by the use of the airflow method, shall be permitted. The design airflow shall be in accordance with this section. Airflow shall be directed to limit smoke migration from the fire zone. The geometry of openings shall be considered to prevent flow reversal from turbulent effects. Smoke control systems using the airflow method shall be designed in accordance with NFPA 92.

[F] 909.7.1 Prohibited conditions. This method shall not be employed where either the quantity of air or the velocity of the airflow will adversely affect other portions of the smoke control system, unduly intensify the fire, disrupt plume dynamics or interfere with exiting. In no case shall airflow toward the fire exceed 200 feet per minute (1.02 m/s). Where the calculated airflow exceeds this limit, the airflow method shall not be used.

[F] 909.8 Exhaust method. Where *approved* by the fire code official, mechanical smoke control for large enclosed volumes, such as in atriums or malls, shall be permitted to utilize the exhaust method. Smoke control systems using the exhaust method shall be designed in accordance with NFPA 92.

[F] 909.8.1 Smoke layer. The height of the lowest horizontal surface of the smoke layer interface shall be maintained not less than 6 feet (1829 mm) above a walking surface that forms a portion of a required egress system within the smoke zone.

[F] 909.9 Design fire. The design fire shall be based on a rational analysis performed by the *registered design professional* and *approved* by the fire code official. The design fire shall be based on the analysis in accordance with Section 909.4 and this section.

[F] 909.9.1 Factors considered. The engineering analysis shall include the characteristics of the fuel, fuel load, effects included by the fire and whether the fire is likely to be steady or unsteady.

[F] 909.9.2 Design fire fuel. Determination of the design fire shall include consideration of the type of fuel, fuel spacing and configuration.

[F] 909.9.3 Heat-release assumptions. The analysis shall make use of best available data from *approved* sources and shall not be based on excessively stringent limitations of combustible material.

[F] 909.9.4 Sprinkler effectiveness assumptions. A documented engineering analysis shall be provided for conditions that assume fire growth is halted at the time of sprinkler activation.

[F] 909.10 Equipment. Equipment including, but not limited to, fans, ducts, automatic *dampers* and balance *dampers*, shall be suitable for its intended use, suitable for the probable exposure temperatures that the rational analysis indicates and as *approved* by the fire code official.

[F] 909.10.1 Exhaust fans. Components of exhaust fans shall be rated and certified by the manufacturer for the probable temperature rise to which the components will be exposed. This temperature rise shall be computed by:

$$T_s = (Q_c/mc) + (T_a) \qquad \textbf{(Equation 9-3)}$$

where:

c = Specific heat of smoke at smoke layer temperature, Btu/lb°F (kJ/kg · K).

m = Exhaust rate, pounds per second (kg/s).

Q_c = Convective heat output of fire, Btu/s (kW).

T_a = Ambient temperature, °F (K).

T_s = Smoke temperature, °F (K).

Exception: Reduced T_s as calculated based on the assurance of adequate dilution air.

[F] 909.10.2 Ducts. Duct materials and joints shall be capable of withstanding the probable temperatures and pressures to which they are exposed as determined in accordance with Section 909.10.1. Ducts shall be constructed and supported in accordance with the *International Mechanical Code*. Ducts shall be leak tested to 1.5 times the maximum design pressure in accordance with nationally accepted practices. Measured leakage shall not exceed 5 percent of design flow. Results of such testing shall be a part of the documentation procedure. Ducts shall be supported directly from fire-resistance-rated structural elements of the building by substantial, noncombustible supports.

Exception: Flexible connections, for the purpose of vibration isolation, complying with the *International Mechanical Code* and that are constructed of *approved* fire-resistance-rated materials.

[F] 909.10.3 Equipment, inlets and outlets. Equipment shall be located so as to not expose uninvolved portions of the building to an additional fire hazard. Outside air inlets shall be located so as to minimize the potential for introducing smoke or flame into the building. Exhaust outlets shall be so located as to minimize reintroduction of smoke into the building and to limit exposure of the building or adjacent buildings to an additional fire hazard.

[F] 909.10.4 Automatic dampers. Automatic *dampers*, regardless of the purpose for which they are installed within the smoke control system, shall be *listed* and conform to the requirements of *approved*, recognized standards.

[F] 909.10.5 Fans. In addition to other requirements, belt-driven fans shall have 1.5 times the number of belts required for the design duty, with the minimum number of belts being two. Fans shall be selected for stable performance based on normal temperature and, where applicable, elevated temperature. Calculations and manufacturer's fan curves shall be part of the documentation procedures. Fans shall be supported and restrained by noncombustible devices in accordance with the requirements of Chapter 16.

Motors driving fans shall not be operated beyond their nameplate horsepower (kilowatts), as determined from measurement of actual current draw, and shall have a minimum service factor of 1.15.

[F] 909.11 Standby power. Smoke control systems shall be provided with standby power in accordance with Section 2702.

909.11.1 Equipment room. The standby power source and its transfer switches shall be in a room separate from the normal power transformers and switch gears and ventilated directly to and from the exterior. The room shall be enclosed with not less than 1-hour *fire barriers* constructed in accordance with Section 707 or *horizontal assemblies* constructed in accordance with Section 711, or both.

[F] 909.11.2 Power sources and power surges. Elements of the smoke control system relying on volatile memories or the like shall be supplied with uninterruptable power sources of sufficient duration to span 15-minute primary power interruption. Elements of the smoke control system susceptible to power surges shall be suitably protected by conditioners, suppressors or other *approved* means.

[F] 909.12 Detection and control systems. Fire detection systems providing control input or output signals to mechanical smoke control systems or elements thereof shall comply with the requirements of Section 907. Such systems shall be equipped with a control unit complying with UL 864 and *listed* as smoke control equipment.

909.12.1 Verification. Control systems for mechanical smoke control systems shall include provisions for verification. Verification shall include positive confirmation of actuation, testing, manual override and the presence of power downstream of all disconnects. A preprogrammed weekly test sequence shall report abnormal conditions audibly, visually and by printed report. The preprogrammed weekly test shall operate all devices, equipment and components used for smoke control.

Exception: Where verification of individual components tested through the preprogrammed weekly testing sequence will interfere with, and produce unwanted effects to, normal building operation, such individual components are permitted to be bypassed from the preprogrammed weekly testing, where *approved* by the building official and in accordance with both of the following:

1. Where the operation of components is bypassed from the preprogrammed weekly test, presence of power downstream of all disconnects shall be verified weekly by a listed control unit.
2. Testing of all components bypassed from the preprogrammed weekly test shall be in accordance with Section 909.20.6 of the *International Fire Code*.

[F] 909.12.2 Wiring. In addition to meeting requirements of NFPA 70, all wiring, regardless of voltage, shall be fully enclosed within continuous raceways.

[F] 909.12.3 Activation. Smoke control systems shall be activated in accordance with this section.

[F] 909.12.3.1 Pressurization, airflow or exhaust method. Mechanical smoke control systems using the pressurization, airflow or exhaust method shall have completely automatic control.

[F] 909.12.3.2 Passive method. Passive smoke control systems actuated by *approved* spot-type detectors *listed* for releasing service shall be permitted.

[F] 909.12.4 Automatic control. Where completely automatic control is required or used, the automatic-control sequences shall be initiated from an appropriately zoned *automatic sprinkler system* complying with Section 903.3.1.1, manual controls that are readily accessible to the fire department and any smoke detectors required by engineering analysis.

[F] 909.13 Control air tubing. Control air tubing shall be of sufficient size to meet the required response times. Tubing shall be flushed clean and dry prior to final connections and shall be adequately supported and protected from damage. Tubing passing through concrete or masonry shall be sleeved and protected from abrasion and electrolytic action.

[F] 909.13.1 Materials. Control-air tubing shall be hard-drawn copper, Type L, ACR in accordance with ASTM B 42, ASTM B 43, ASTM B 68, ASTM B 88, ASTM B 251 and ASTM B 280. Fittings shall be wrought copper or brass, solder type in accordance with ASME B 16.18 or ASME B16.22. Changes in direction shall be made with appropriate tool bends. Brass compression-type fittings shall be used at final connection to devices; other joints shall be brazed using a BCuP-5 brazing alloy with solidus above 1,100°F (593°C) and liquids below 1,500°F (816°C). Brazing flux shall be used on copper-to-brass joints only.

Exception: Nonmetallic tubing used within control panels and at the final connection to devices provided all of the following conditions are met:

1. Tubing shall comply with the requirements of Section 602.2.1.3 of the *International Mechanical Code*.
2. Tubing and connected devices shall be completely enclosed within a galvanized or paint-grade steel enclosure having a minimum thickness of 0.0296 inch (0.7534 mm) (No. 22 gage). Entry to the enclosure shall be by copper tubing with a protective grommet of neoprene or Teflon or by suitable brass compression to male barbed adapter.
3. Tubing shall be identified by appropriately documented coding.
4. Tubing shall be neatly tied and supported within the enclosure.Tubing bridging cabinets and doors or moveable devices shall be of sufficient length to avoid tension and excessive stress. Tubing shall be protected against abrasion. Tubing serving devices on doors shall be fastened along hinges.

[F] 909.13.2 Isolation from other functions. Control tubing serving other than smoke control functions shall be isolated by automatic isolation valves or shall be an independent system.

[F] 909.13.3 Testing. Control air tubing shall be tested at three times the operating pressure for not less than 30 minutes without any noticeable loss in gauge pressure prior to final connection to devices.

[F] 909.14 Marking and identification. The detection and control systems shall be clearly marked at all junctions, accesses and terminations.

[F] 909.15 Control diagrams. Identical control diagrams showing all devices in the system and identifying their location and function shall be maintained current and kept on file with the fire code official, the fire department and in the fire command center in a format and manner *approved* by the fire chief.

[F] 909.16 Fire fighter's smoke control panel. A fire fighter's smoke control panel for fire department emergency response purposes only shall be provided and shall include manual control or override of automatic control for mechanical smoke control systems. The panel shall be located in a fire command center complying with Section 911 in high-rise buildings or buildings with smoke-protected assembly seating. In all other buildings, the fire fighter's smoke control panel shall be installed in an *approved* location adjacent to the fire alarm control panel. The fire fighter's smoke control panel shall comply with Sections 909.16.1 through 909.16.3.

[F] 909.16.1 Smoke control systems. Fans within the building shall be shown on the fire fighter's control panel. A clear indication of the direction of airflow and the relationship of components shall be displayed. Status indicators shall be provided for all smoke control equipment, annunciated by fan and zone, and by pilot-lamp-type indicators as follows:

1. Fans, *dampers* and other operating equipment in their normal status—WHITE.
2. Fans, *dampers* and other operating equipment in their off or closed status—RED.
3. Fans, *dampers* and other operating equipment in their on or open status—GREEN.
4. Fans, *dampers* and other operating equipment in a fault status—YELLOW/AMBER.

[F] 909.16.2 Smoke control panel. The fire fighter's control panel shall provide control capability over the complete smoke control system equipment within the building as follows:

1. ON-AUTO-OFF control over each individual piece of operating smoke control equipment that can also be controlled from other sources within the building. This includes *stairway* pressurization fans; smoke exhaust fans; supply, return and exhaust fans; elevator shaft fans and other operating equipment used or intended for smoke control purposes.
2. OPEN-AUTO-CLOSE control over individual *dampers* relating to smoke control and that are also controlled from other sources within the building.
3. ON-OFF or OPEN-CLOSE control over smoke control and other critical equipment associated with a fire or smoke emergency and that can only be controlled from the fire fighter's control panel.

Exceptions:

1. Complex systems, where *approved*, where the controls and indicators are combined to control and indicate all elements of a single smoke zone as a unit.
2. Complex systems, where *approved*, where the control is accomplished by computer interface using *approved*, plain English commands.

[F] 909.16.3 Control action and priorities. The fire-fighter's control panel actions shall be as follows:

1. ON-OFF and OPEN-CLOSE control actions shall have the highest priority of any control point within the building. Once issued from the fire fighter's control panel, automatic or manual control from any other control point within the building shall not contradict the control action. Where automatic means are provided to interrupt normal, nonemergency equipment operation or produce a specific result to safeguard the building or equipment including, but not limited to, duct freezestats, duct smoke detectors, high-temperature cutouts, temperature-actuated linkage and similar devices, such means shall be capable of being overridden by the fire fighter's control panel. The last control action as indicated by each fire fighter's control panel switch position shall prevail. Control actions shall not require the smoke control system to assume more than one configuration at any one time.

   Exception: Power disconnects required by NFPA 70.
2. Only the AUTO position of each three-position fire-fighter's control panel switch shall allow automatic or manual control action from other control points within the building. The AUTO position shall be the NORMAL, nonemergency, building control position. Where a fire fighter's control panel is in the AUTO position, the actual status of the device (on, off, open, closed) shall continue to be indicated by the status indicator described in Section 909.16.1. Where directed by an automatic signal to assume an emergency condition, the NORMAL position shall become the emergency condition for that device or group of devices within the zone. Control actions shall not require the smoke control system to assume more than one configuration at any one time.

[F] 909.17 System response time. Smoke-control system activation shall be initiated immediately after receipt of an appropriate automatic or manual activation command. Smoke control systems shall activate individual components (such as *dampers* and fans) in the sequence necessary to prevent physical damage to the fans, *dampers*, ducts and other equipment. For purposes of smoke control, the fire fighter's control panel response time shall be the same for automatic or manual smoke control action initiated from any other building control point. The total response time, including that necessary for

detection, shutdown of operating equipment and smoke control system startup, shall allow for full operational mode to be achieved before the conditions in the space exceed the design smoke condition. The system response time for each component and their sequential relationships shall be detailed in the required rational analysis and verification of their installed condition reported in the required final report.

[F] 909.18 Acceptance testing. Devices, equipment, components and sequences shall be individually tested. These tests, in addition to those required by other provisions of this code, shall consist of determination of function, sequence and, where applicable, capacity of their installed condition.

[F] 909.18.1 Detection devices. Smoke or fire detectors that are a part of a smoke control system shall be tested in accordance with Chapter 9 in their installed condition. Where applicable, this testing shall include verification of airflow in both minimum and maximum conditions.

[F] 909.18.2 Ducts. Ducts that are part of a smoke control system shall be traversed using generally accepted practices to determine actual air quantities.

[F] 909.18.3 Dampers. *Dampers* shall be tested for function in their installed condition.

[F] 909.18.4 Inlets and outlets. Inlets and outlets shall be read using generally accepted practices to determine air quantities.

[F] 909.18.5 Fans. Fans shall be examined for correct rotation. Measurements of voltage, amperage, revolutions per minute (rpm) and belt tension shall be made.

[F] 909.18.6 Smoke barriers. Measurements using inclined manometers or other *approved* calibrated measuring devices shall be made of the pressure differences across *smoke barriers*. Such measurements shall be conducted for each possible smoke control condition.

[F] 909.18.7 Controls. Each smoke zone equipped with an automatic-initiation device shall be put into operation by the actuation of one such device. Each additional device within the zone shall be verified to cause the same sequence without requiring the operation of fan motors in order to prevent damage. Control sequences shall be verified throughout the system, including verification of override from the fire-fighter's control panel and simulation of standby power conditions.

[F] 909.18.8 Testing for smoke control. Smoke control systems shall be tested by a special inspector in accordance with Section 1705.18.

[F] 909.18.8.1 Scope of testing. Testing shall be conducted in accordance with the following:

1. During erection of ductwork and prior to concealment for the purposes of leakage testing and recording of device location.
2. Prior to occupancy and after sufficient completion for the purposes of pressure-difference testing, flow measurements, and detection and control verification.

[F] 909.18.8.2 Qualifications. *Approved* agencies for smoke control testing shall have expertise in fire protection engineering, mechanical engineering and certification as air balancers.

[F] 909.18.8.3 Reports. A complete report of testing shall be prepared by the *approved* agency. The report shall include identification of all devices by manufacturer, nameplate data, design values, measured values and identification tag or *mark*. The report shall be reviewed by the responsible *registered design professional* and, when satisfied that the design intent has been achieved, the responsible *registered design professional* shall sign, seal and date the report.

[F] 909.18.8.3.1 Report filing. A copy of the final report shall be filed with the fire code official and an identical copy shall be maintained in an *approved* location at the building.

[F] 909.18.9 Identification and documentation. Charts, drawings and other documents identifying and locating each component of the smoke control system, and describing its proper function and maintenance requirements, shall be maintained on file at the building as an attachment to the report required by Section 909.18.8.3. Devices shall have an *approved* identifying tag or *mark* on them consistent with the other required documentation and shall be dated indicating the last time they were successfully tested and by whom.

[F] 909.19 System acceptance. Buildings, or portions thereof, required by this code to comply with this section shall not be issued a certificate of occupancy until such time that the fire code official determines that the provisions of this section have been fully complied with and that the fire department has received satisfactory instruction on the operation, both automatic and manual, of the system and a written maintenance program complying with the requirements of Section 909.20.1 of the *International Fire Code* has been submitted and approved by the fire code official.

Exception: In buildings of phased construction, a temporary certificate of occupancy, as *approved* by the fire code official, shall be allowed provided that those portions of the building to be occupied meet the requirements of this section and that the remainder does not pose a significant hazard to the safety of the proposed occupants or adjacent buildings.

909.20 Smokeproof enclosures. Where required by Section 1023.11, a smokeproof enclosure shall be constructed in accordance with this section. A smokeproof enclosure shall consist of an *interior exit stairway* or *ramp* that is enclosed in accordance with the applicable provisions of Section 1023 and an open exterior balcony or ventilated vestibule meeting the requirements of this section. Where access to the roof is required by the *International Fire Code*, such access shall be from the smokeproof enclosure where a smokeproof enclosure is required.

909.20.1 Access. Access to the *stairway* or *ramp* shall be by way of a vestibule or an open exterior balcony. The

minimum dimension of the vestibule shall be not less than the required width of the *corridor* leading to the vestibule but shall not have a width of less than 44 inches (1118 mm) and shall not have a length of less than 72 inches (1829 mm) in the direction of egress travel.

909.20.2 Construction. The smokeproof enclosure shall be separated from the remainder of the building by not less than 2-hour *fire barriers* constructed in accordance with Section 707 or *horizontal assemblies* constructed in accordance with Section 711, or both. Openings are not permitted other than the required *means of egress* doors. The vestibule shall be separated from the *stairway* or *ramp* by not less than 2-hour *fire barriers* constructed in accordance with Section 707 or *horizontal assemblies* constructed in accordance with Section 711, or both. The open exterior balcony shall be constructed in accordance with the *fire-resistance rating* requirements for floor assemblies.

909.20.2.1 Door closers. Doors in a smokeproof enclosure shall be self- or automatic closing by actuation of a smoke detector in accordance with Section 716.5.9.3 and shall be installed at the floor-side entrance to the smokeproof enclosure. The actuation of the smoke detector on any door shall activate the closing devices on all doors in the smokeproof enclosure at all levels. Smoke detectors shall be installed in accordance with Section 907.3.

909.20.3 Natural ventilation alternative. The provisions of Sections 909.20.3.1 through 909.20.3.3 shall apply to ventilation of smokeproof enclosures by natural means.

909.20.3.1 Balcony doors. Where access to the *stairway* or *ramp* is by way of an open exterior balcony, the door assembly into the enclosure shall be a *fire door assembly* in accordance with Section 716.5.

909.20.3.2 Vestibule doors. Where access to the *stairway* or *ramp* is by way of a vestibule, the door assembly into the vestibule shall be a *fire door assembly* complying with Section 716.5. The door assembly from the vestibule to the *stairway* shall have not less than a 20-minute *fire protection rating* complying with Section 716.5.

909.20.3.3 Vestibule ventilation. Each vestibule shall have a minimum net area of 16 square feet (1.5 m^2) of opening in a wall facing an outer *court*, *yard* or *public way* that is not less than 20 feet (6096 mm) in width.

909.20.4 Mechanical ventilation alternative. The provisions of Sections 909.20.4.1 through 909.20.4.4 shall apply to ventilation of smokeproof enclosures by mechanical means.

909.20.4.1 Vestibule doors. The door assembly from the building into the vestibule shall be a *fire door assembly* complying with Section 716.5.3. The door assembly from the vestibule to the *stairway* or *ramp* shall not have less than a 20-minute *fire protection rating* and shall meet the requirements for a smoke door assembly in accordance with Section 716.5.3. The door shall be installed in accordance with NFPA 105.

909.20.4.2 Vestibule ventilation. The vestibule shall be supplied with not less than one air change per minute and the exhaust shall be not less than 150 percent of supply. Supply air shall enter and exhaust air shall discharge from the vestibule through separate, tightly constructed ducts used only for that purpose. Supply air shall enter the vestibule within 6 inches (152 mm) of the floor level. The top of the exhaust register shall be located at the top of the smoke trap but not more than 6 inches (152 mm) down from the top of the trap, and shall be entirely within the smoke trap area. Doors in the open position shall not obstruct duct openings. Duct openings with controlling *dampers* are permitted where necessary to meet the design requirements, but *dampers* are not otherwise required.

909.20.4.2.1 Engineered ventilation system. Where a specially engineered system is used, the system shall exhaust a quantity of air equal to not less than 90 air changes per hour from any vestibule in the emergency operation mode and shall be sized to handle three vestibules simultaneously. Smoke detectors shall be located at the floor-side entrance to each vestibule and shall activate the system for the affected vestibule. Smoke detectors shall be installed in accordance with Section 907.3.

909.20.4.3 Smoke trap. The vestibule ceiling shall be not less than 20 inches (508 mm) higher than the door opening into the vestibule to serve as a smoke and heat trap and to provide an upward-moving air column. The height shall not be decreased unless *approved* and justified by design and test.

909.20.4.4 Stairway or ramp shaft air movement system. The *stairway* or *ramp* shaft shall be provided with a dampered relief opening and supplied with sufficient air to maintain a minimum positive pressure of 0.10 inch of water (25 Pa) in the shaft relative to the vestibule with all doors closed.

909.20.5 Stairway and ramp pressurization alternative. Where the building is equipped throughout with an *automatic sprinkler system* in accordance with Section 903.3.1.1, the vestibule is not required, provided each interior *exit stairway* or *ramp* is pressurized to not less than 0.10 inch of water (25 Pa) and not more than 0.35 inches of water (87 Pa) in the shaft relative to the building measured with all *interior exit stairway* and *ramp* doors closed under maximum anticipated conditions of stack effect and wind effect.

909.20.6 Ventilating equipment. The activation of ventilating equipment required by the alternatives in Sections 909.20.4 and 909.20.5 shall be by smoke detectors installed at each floor level at an *approved* location at the entrance to the smokeproof enclosure. When the closing device for the *stairway* and *ramp* shaft and vestibule doors is activated by smoke detection or power failure, the mechanical equipment shall activate and operate at the required performance levels. Smoke detectors shall be installed in accordance with Section 907.3.

909.20.6.1 Ventilation systems. Smokeproof enclosure ventilation systems shall be independent of other building ventilation systems. The equipment, control wiring, power wiring and ductwork shall comply with one of the following:

1. Equipment, control wiring, power wiring and ductwork shall be located exterior to the building and directly connected to the smokeproof enclosure or connected to the smokeproof enclosure by ductwork enclosed by not less than 2-hour *fire barriers* constructed in accordance with Section 707 or *horizontal assemblies* constructed in accordance with Section 711, or both.
2. Equipment, control wiring, power wiring and ductwork shall be located within the smokeproof enclosure with intake or exhaust directly from and to the outside or through ductwork enclosed by not less than 2-hour *fire barriers* constructed in accordance with Section 707 or *horizontal assemblies* constructed in accordance with Section 711, or both.
3. Equipment, control wiring, power wiring and ductwork shall be located within the building if separated from the remainder of the building, including other mechanical equipment, by not less than 2-hour *fire barriers* constructed in accordance with Section 707 or *horizontal assemblies* constructed in accordance with Section 711, or both.

Exceptions:

1. Control wiring and power wiring utilizing a 2-hour rated cable or cable system.
2. Where encased with not less than 2 inches (51 mm) of concrete.
3. Control wiring and power wiring protected by a listed electrical circuit protective system with a fire-resistance rating of not less than 2 hours.

909.20.6.2 Standby power. Mechanical vestibule and *stairway* and *ramp* shaft ventilation systems and automatic fire detection systems shall be provided with standby power in accordance with Section 2702.

909.20.6.3 Acceptance and testing. Before the mechanical equipment is *approved*, the system shall be tested in the presence of the *building official* to confirm that the system is operating in compliance with these requirements.

909.21 Elevator hoistway pressurization alternative. Where elevator hoistway pressurization is provided in lieu of required enclosed elevator lobbies, the pressurization system shall comply with Sections 909.21.1 through 909.21.11.

909.21.1 Pressurization requirements. Elevator hoistways shall be pressurized to maintain a minimum positive pressure of 0.10 inch of water (25 Pa) and a maximum positive pressure of 0.25 inch of water (67 Pa) with respect to adjacent occupied space on all floors. This pressure shall be measured at the midpoint of each hoistway door, with all elevator cars at the floor of recall and all hoistway doors on the floor of recall open and all other hoistway doors closed. The pressure differentials shall be measured between the hoistway and the adjacent elevator landing. The opening and closing of hoistway doors at each level must be demonstrated during this test. The supply air intake shall be from an outside, uncontaminated source located a minimum distance of 20 feet (6096 mm) from any air exhaust system or outlet.

Exceptions:

1. On floors containing only Group R occupancies, the pressure differential is permitted to be measured between the hoistway and a *dwelling unit* or *sleeping unit*.
2. Where an elevator opens into a lobby enclosed in accordance with Section 3007.6 or 3008.6, the pressure differential is permitted to be measured between the hoistway and the space immediately outside the door(s) from the floor to the enclosed lobby.
3. The pressure differential is permitted to be measured relative to the outdoor atmosphere on floors other than the following:
   - 3.1. The fire floor.
   - 3.2. The two floors immediately below the fire floor.
   - 3.3. The floor immediately above the fire floor.
4. The minimum positive pressure of 0.10 inch of water (25 Pa) and a maximum positive pressure of 0.25 inch of water (67 Pa) with respect to occupied floors are not required at the floor of recall with the doors open.

909.21.1.1 Use of ventilation systems. Ventilation systems, other than hoistway supply air systems, are permitted to be used to exhaust air from adjacent spaces on the fire floor, two floors immediately below and one floor immediately above the fire floor to the building's exterior where necessary to maintain positive pressure relationships as required in Section 909.21.1 during operation of the elevator shaft pressurization system.

909.21.2 Rational analysis. A rational analysis complying with Section 909.4 shall be submitted with the *construction documents*.

909.21.3 Ducts for system. Any duct system that is part of the pressurization system shall be protected with the same *fire-resistance rating* as required for the elevator shaft enclosure.

909.21.4 Fan system. The fan system provided for the pressurization system shall be as required by Sections 909.21.4.1 through 909.21.4.4.

909.21.4.1 Fire resistance. Where located within the building, the fan system that provides the pressurization shall be protected with the same *fire-resistance rating* required for the elevator shaft enclosure.

909.21.4.2 Smoke detection. The fan system shall be equipped with a smoke detector that will automatically shut down the fan system when smoke is detected within the system.

909.21.4.3 Separate systems. A separate fan system shall be used for each elevator hoistway.

909.21.4.4 Fan capacity. The supply fan shall be either adjustable with a capacity of not less than 1,000 cfm (0.4719 m^3/s) per door, or that specified by a *registered design professional* to meet the requirements of a designed pressurization system.

909.21.5 Standby power. The pressurization system shall be provided with standby power in accordance with Section 2702.

909.21.6 Activation of pressurization system. The elevator pressurization system shall be activated upon activation of either the building fire alarm system or the elevator lobby smoke detectors. Where both a building fire alarm system and elevator lobby smoke detectors are present, each shall be independently capable of activating the pressurization system.

909.21.7 Testing. Testing for performance shall be required in accordance with Section 909.18.8. System acceptance shall be in accordance with Section 909.19.

909.21.8 Marking and identification. Detection and control systems shall be marked in accordance with Section 909.14.

909.21.9 Control diagrams. Control diagrams shall be provided in accordance with Section 909.15.

909.21.10 Control panel. A control panel complying with Section 909.16 shall be provided.

909.21.11 System response time. Hoistway pressurization systems shall comply with the requirements for smoke control system response time in Section 909.17.

SECTION 910
SMOKE AND HEAT REMOVAL

[F] 910.1 General. Where required by this code, smoke and heat vents or mechanical smoke removal systems shall conform to the requirements of this section.

* **[F] 910.2 Where required.** Smoke and heat vents or a mechanical smoke removal system shall be installed as
** required by Sections 910.2.1 and 910.2.2.

Exceptions:

1. Frozen food warehouses used solely for storage of Class I and II commodities where protected by an *approved automatic sprinkler system.*
2. Smoke and heat removal shall not be required in areas of buildings equipped with early suppression fast-response (ESFR) sprinklers.
3. Smoke and heat removal shall not be required in areas of buildings equipped with control mode special application sprinklers with a response time index of 50 $(m \cdot s)^{1/2}$ or less that are listed to control a fire in stored commodities with 12 or fewer sprinklers.

910.2.1 Group F-1 or S-1. Smoke and heat vents installed in accordance with Section 910.3 or a mechanical smoke removal system installed in accordance with Section 910.4 shall be installed in buildings and portions thereof used as a Group F-1 or S-1 occupancy having more than 50,000 square feet (4645 m^2) of undivided area. In occupied portions of a building equipped throughout with an *automatic sprinkler system* in accordance with Section 903.3.1.1 where the upper surface of the story is not a roof assembly, a mechanical smoke removal system in accordance with Section 910.4 shall be installed.

Exception: Group S-1 aircraft repair hangars.

[F] 910.2.2 High-piled combustible storage. Smoke and heat removal required by Table 3206.2 of the *International Fire Code* for buildings and portions thereof containing high-piled combustible storage shall be installed in accordance with Section 910.3 in unsprinklered buildings. In buildings and portions thereof containing high-piled combustible storage equipped throughout with an *automatic sprinkler system* in accordance with Section 903.3.1.1, a smoke and heat removal system shall be installed in accordance with Section 910.3 or 910.4. In occupied portions of a building equipped throughout with an *automatic sprinkler system* in accordance with Section 903.3.1.1, where the upper surface of the story is not a roof assembly, a mechanical smoke removal system in accordance with Section 910.4 shall be installed.

[F] 910.3 Smoke and heat vents. The design and installation of smoke and heat vents shall be in accordance with Sections 910.3.1 through 910.3.3.

[F] 910.3.1 Listing and labeling. Smoke and heat vents shall be *listed* and labeled to indicate compliance with UL 793 or FM 4430.

[F] 910.3.2 Smoke and heat vent locations. Smoke and heat vents shall be located 20 feet (6096 mm) or more from adjacent *lot lines* and *fire walls* and 10 feet (3048 mm) or more from *fire barriers*. Vents shall be uniformly located within the roof in the areas of the building where the vents are required to be installed by Section 910.2 with consideration given to roof pitch, sprinkler location and structural members.

910.3.3 Smoke and heat vents area. The required aggregate area of smoke and heat vents shall be calculated as follows:

For buildings equipped throughout with an *automatic sprinkler system* in accordance with Section 903.3.1.1:

$$A_{VR} = V/9000 \qquad \textbf{(Equation 9-4)}$$

where:

A_{VR} = The required aggregate vent area (ft^2).

V = Volume (ft^3) of the area that requires smoke removal.

For unsprinklered buildings:

$$A_{VR} = A_{FA}/50 \quad \text{(Equation 9-5)}$$

where:

A_{VR} = The required aggregate vent area (ft^2).

A_{FA} = The area of the floor in the area that requires smoke removal.

[F] 910.4 Mechanical smoke removal systems. Mechanical smoke removal systems shall be designed and installed in accordance with Sections 910.4.1 through 910.4.7.

910.4.1 Automatic sprinklers required. The building shall be equipped throughout with an *approved automatic sprinkler system* in accordance with Section 903.3.1.1.

910.4.2 Exhaust fan construction. Exhaust fans that are part of a mechanical smoke removal system shall be rated for operation at 221°F (105°C). Exhaust fan motors shall be located outside of the exhaust fan air stream.

910.4.3 System design criteria. The mechanical smoke removal system shall be sized to exhaust the building at a minimum rate of two air changes per hour based upon the volume of the building or portion thereof without contents. The capacity of each exhaust fan shall not exceed 30,000 cubic feet per minute (14.2 $m^3/_{sec}$).

910.4.3.1 Makeup air. Makeup air openings shall be provided within 6 feet (1829 mm) of the floor level. Operation of makeup air openings shall be manual or automatic. The minimum gross area of makeup air inlets shall be 8 square feet per 1,000 cubic feet per minute (0.74 m^2 per 0.4719 m^3/s) of smoke exhaust.

910.4.4 Activation. The mechanical smoke removal system shall be activated by manual controls only.

910.4.5 Manual control location. Manual controls shall be located so as to be accessible to the fire service from an exterior door of the building and protected against interior fire exposure by not less than 1-hour *fire barriers* constructed in accordance with Section 707 or *horizontal assemblies* constructed in accordance with Section 711, or both.

[F] 910.4.6 Control wiring. Wiring for operation and control of mechanical smoke removal systems shall be connected ahead of the main disconnect in accordance with Section 701.12E of NFPA 70 and be protected against interior fire exposure to temperatures in excess of 1,000°F (538°C) for a period of not less than 15 minutes.

[F] 910.4.7 Controls. Where building air-handling and mechanical smoke removal systems are combined or where independent building air-handling systems are provided, fans shall automatically shut down in accordance with the *International Mechanical Code*. The manual controls provided for the smoke removal system shall have the capability to override the automatic shutdown of fans that are part of the smoke removal system.

910.5 Maintenance. Smoke and heat vents and mechanical smoke removal systems shall be maintained in accordance with the *International Fire Code*.

SECTION 911
FIRE COMMAND CENTER

[F] 911.1 General. Where required by other sections of this code and in buildings classified as high-rise buildings by this code, a fire command center for fire department operations shall be provided and shall comply with Sections 911.1.1 through 911.1.6.

[F] 911.1.1 Location and access. The location and accessibility of the fire command center shall be *approved* by the fire chief.

[F] 911.1.2 Separation. The fire command center shall be separated from the remainder of the building by not less than a 1-hour *fire barrier* constructed in accordance with Section 707 or *horizontal assembly* constructed in accordance with Section 711, or both.

[F] 911.1.3 Size. The room shall be not less than 200 square feet (19 m^2) with a minimum dimension of 10 feet (3048 mm).

[F] 911.1.4 Layout approval. A layout of the fire command center and all features required by this section to be contained therein shall be submitted for approval prior to installation.

[F] 911.1.5 Storage. Storage unrelated to operation of the fire command center shall be prohibited.

[F] 911.1.6 Required features. The fire command center shall comply with NFPA 72 and shall contain all of the following features:

1. The emergency voice/alarm communication system control unit.
2. The fire department communications system.
3. Fire detection and alarm system annunciator.
4. Annunciator unit visually indicating the location of the elevators and whether they are operational.
5. Status indicators and controls for air distribution systems.
6. The fire fighter's control panel required by Section 909.16 for smoke control systems installed in the building.
7. Controls for unlocking *interior exit stairway* doors simultaneously.
8. Sprinkler valve and waterflow detector display panels.
9. Emergency and standby power status indicators.
10. A telephone for fire department use with controlled access to the public telephone system.
11. Fire pump status indicators.
12. Schematic building plans indicating the typical floor plan and detailing the building core, *means*

of egress, fire protection systems, fire fighter air replenishment system, fire-fighting equipment and fire department access and the location of *fire walls, fire barriers, fire partitions, smoke barriers* and smoke partitions.

13. An *approved* Building Information Card that contains, but is not limited to, the following information:

    13.1. General building information that includes: property name, address, the number of floors in the building above and below grade, use and occupancy classification (for mixed uses, identify the different types of occupancies on each floor), and the estimated building population during the day, night and weekend.

    13.2. Building emergency contact information that includes: a list of the building's emergency contacts including but not limited to building manager and building engineer and their respective work phone number, cell phone number, e-mail address.

    13.3. Building construction information that includes: the type of building construction including but not limited to floors, walls, columns, and roof assembly.

    13.4. *Exit access* and *exit stairway* information that includes: number of *exit access* and *exit stairways* in the building, each *exit access* and *exit stairway* designation and floors served, location where each *exit access* and *exit stairway* discharges, *interior exit stairways* that are pressurized, *exit* stairways provided with emergency lighting, each *exit stairway* that allows reentry, *exit stairways* providing roof access; elevator information that includes: number of elevator banks, elevator bank designation, elevator car numbers and respective floors that they serve; location of elevator machine rooms, control rooms and control spaces; location of sky lobby, location of freight elevator banks.

    13.5. Building services and system information that includes: location of mechanical rooms, location of building management system, location and capacity of all fuel oil tanks, location of emergency generator, location of natural gas service.

    13.6. Fire protection system information that includes: location of standpipes, location of fire pump room, location of fire department connections, floors protected by automatic sprinklers, location of different types of *automatic sprinkler systems* installed including, but not limited to, dry, wet and pre-action.

    13.7 Hazardous material information that includes: location of hazardous material, quantity of hazardous material.

14. Work table.

15. Generator supervision devices, manual start and transfer features.

16. Public address system, where specifically required by other sections of this code.

17. Elevator fire recall switch in accordance with ASME A17.1.

18. Elevator emergency or standby power selector switch(es), where emergency or standby power is provided.

SECTION 912
FIRE DEPARTMENT CONNECTIONS

[F] 912.1 Installation. Fire department connections shall be installed in accordance with the NFPA standard applicable to the system design and shall comply with Sections 912.2 through 912.6.

[F] 912.2 Location. With respect to hydrants, driveways, buildings and landscaping, fire department connections shall be so located that fire apparatus and hose connected to supply the system will not obstruct access to the buildings for other fire apparatus. The location of fire department connections shall be *approved* by the fire chief.

[F] 912.2.1 Visible location. Fire department connections shall be located on the street side of buildings, fully visible and recognizable from the street or nearest point of fire department vehicle access or as otherwise *approved* by the fire chief.

[F] 912.2.2 Existing buildings. On existing buildings, wherever the fire department connection is not visible to approaching fire apparatus, the fire department connection shall be indicated by an *approved* sign mounted on the street front or on the side of the building. Such sign shall have the letters "FDC" not less than 6 inches (152 mm) high and words in letters not less than 2 inches (51 mm) high or an arrow to indicate the location. Such signs shall be subject to the approval of the fire code official.

[F] 912.3 Fire hose threads. Fire hose threads used in connection with standpipe systems shall be *approved* and shall be compatible with fire department hose threads.

[F] 912.4 Access. Immediate access to fire department connections shall be maintained at all times and without obstruction by fences, bushes, trees, walls or any other fixed or moveable object. Access to fire department connections shall be *approved* by the fire chief.

Exception: Fences, where provided with an access gate equipped with a sign complying with the legend requirements of this section and a means of emergency operation. The gate and the means of emergency operation shall be *approved* by the fire chief and maintained operational at all times.

[F] 912.4.1 Locking fire department connection caps. The fire code official is authorized to require locking caps on fire department connections for water-based *fire protection systems* where the responding fire department carries appropriate key wrenches for removal.

[F] 912.4.2 Clear space around connections. A working space of not less than 36 inches (762 mm) in width, 36 inches (914 mm) in depth and 78 inches (1981 mm) in height shall be provided and maintained in front of and to the sides of wall-mounted fire department connections and around the circumference of free-standing fire department connections, except as otherwise required or *approved* by the fire chief.

[F] 912.4.3 Physical protection. Where fire department connections are subject to impact by a motor vehicle, vehicle impact protection shall be provided in accordance with Section 312 of the *International Fire Code.*

[F] 912.5 Signs. A metal sign with raised letters not less than 1 inch (25 mm) in size shall be mounted on all fire department connections serving automatic sprinklers, standpipes or fire pump connections. Such signs shall read: AUTOMATIC SPRINKLERS or STANDPIPES or TEST CONNECTION or a combination thereof as applicable. Where the fire department connection does not serve the entire building, a sign shall be provided indicating the portions of the building served.

[P] 912.6 Backflow protection. The potable water supply to automatic sprinkler and standpipe systems shall be protected against backflow as required by the *International Plumbing Code.*

SECTION 913
FIRE PUMPS

[F] 913.1 General. Where provided, fire pumps shall be installed in accordance with this section and NFPA 20.

[F] 913.2 Protection against interruption of service. The fire pump, driver and controller shall be protected in accordance with NFPA 20 against possible interruption of service through damage caused by explosion, fire, flood, earthquake, rodents, insects, windstorm, freezing, vandalism and other adverse conditions.

913.2.1 Protection of fire pump rooms. Fire pumps shall be located in rooms that are separated from all other areas of the building by 2-hour *fire barriers* constructed in accordance with Section 707 or 2-hour *horizontal assemblies* constructed in accordance with Section 711, or both.

Exceptions:

1. In other than high-rise buildings, separation by 1-hour *fire barriers* constructed in accordance with Section 707 or 1-hour *horizontal assemblies* constructed in accordance with Section 711, or both, shall be permitted in buildings equipped throughout with an *automatic sprinkler system* in accordance with Section 903.3.1.1 or 903.3.1.2.
2. Separation is not required for fire pumps physically separated in accordance with NFPA 20.

[F] 913.2.2 Circuits supplying fire pumps. Cables used for survivability of circuits supplying fire pumps shall be *listed* in accordance with UL 2196. Electrical circuit protective systems shall be installed in accordance with their listing requirements.

[F] 913.3 Temperature of pump room. Suitable means shall be provided for maintaining the temperature of a pump room or pump house, where required, above 40°F (5°C).

[F] 913.3.1 Engine manufacturer's recommendation. Temperature of the pump room, pump house or area where engines are installed shall never be less than the minimum recommended by the engine manufacturer. The engine manufacturer's recommendations for oil heaters shall be followed.

[F] 913.4 Valve supervision. Where provided, the fire pump suction, discharge and bypass valves, and isolation valves on the backflow prevention device or assembly shall be supervised open by one of the following methods:

1. Central-station, proprietary or remote-station signaling service.
2. Local signaling service that will cause the sounding of an audible signal at a *constantly attended location.*
3. Locking valves open.
4. Sealing of valves and *approved* weekly recorded inspection where valves are located within fenced enclosures under the control of the owner.

[F] 913.4.1 Test outlet valve supervision. Fire pump test outlet valves shall be supervised in the closed position.

[F] 913.5 Acceptance test. Acceptance testing shall be done in accordance with the requirements of NFPA 20.

SECTION 914
EMERGENCY RESPONDER SAFETY FEATURES

[F] 914.1 Shaftway markings. Vertical shafts shall be identified as required by Sections 914.1.1 and 914.1.2.

[F] 914.1.1 Exterior access to shaftways. Outside openings accessible to the fire department and that open directly on a hoistway or shaftway communicating between two or more floors in a building shall be plainly marked with the word "SHAFTWAY" in red letters not less than 6 inches (152 mm) high on a white background. Such warning signs shall be placed so as to be readily discernible from the outside of the building.

[F] 914.1.2 Interior access to shaftways. Door or window openings to a hoistway or shaftway from the interior of the building shall be plainly marked with the word "SHAFTWAY" in red letters not less than 6 inches (152 mm) high on a white background. Such warning signs shall be placed so as to be readily discernible.

Exception: Markings shall not be required on shaftway openings that are readily discernible as openings onto a shaftway by the construction or arrangement.

[F] 914.2 Equipment room identification. Fire protection equipment shall be identified in an *approved* manner. Rooms

containing controls for air-conditioning systems, sprinkler risers and valves or other fire detection, suppression or control elements shall be identified for the use of the fire department. *Approved* signs required to identify fire protection equipment and equipment location shall be constructed of durable materials, permanently installed and readily visible.

**

SECTION 915
CARBON MONOXIDE DETECTION

[F] 915.1 General. Carbon monoxide detection shall be installed in new buildings in accordance with Sections 915.1.1 through 915.6. Carbon monoxide detection shall be installed in existing buildings in accordance with Chapter 11 of the *International Fire Code*.

[F] 915.1.1 Where required. Carbon monoxide detection shall be provided in Group I-1, I-2, I-4 and R occupancies and in classrooms in Group E occupancies in the locations specified in Section 915.2 where any of the conditions in Sections 915.1.2 through 915.1.6 exist.

[F] 915.1.2 Fuel-burning appliances and fuel-burning fireplaces. Carbon monoxide detection shall be provided in *dwelling units*, *sleeping units* and classrooms that contain a fuel-burning appliance or a fuel-burning fireplace.

[F] 915.1.3 Forced-air furnaces. Carbon monoxide detection shall be provided in *dwelling units*, *sleeping units* and classrooms served by a fuel-burning, forced-air furnace.

Exception: Carbon monoxide detection shall not be required in *dwelling units*, *sleeping units* and classrooms if carbon monoxide detection is provided in the first room or area served by each main duct leaving the furnace, and the carbon monoxide alarm signals are automatically transmitted to an approved location.

[F] 915.1.4 Fuel-burning appliances outside of dwelling units, sleeping units and classrooms. Carbon monoxide detection shall be provided in *dwelling units*, *sleeping units* and classrooms located in buildings that contain fuel-burning appliances or fuel-burning fireplaces.

Exceptions:

1. Carbon monoxide detection shall not be required in *dwelling units*, *sleeping units* and classrooms where there are no communicating openings between the fuel-burning appliance or fuel-burning fireplace and the *dwelling unit*, *sleeping unit* or classroom.
2. Carbon monoxide detection shall not be required in *dwelling units*, *sleeping units* and classrooms where carbon monoxide detection is provided in one of the following locations:
   - 2.1. In an approved location between the fuel-burning appliance or fuel-burning fireplace and the *dwelling unit*, *sleeping unit* or classroom.
   - 2.2. On the ceiling of the room containing the fuel-burning appliance or fuel-burning fireplace.

[F] 915.1.5 Private garages. Carbon monoxide detection shall be provided in *dwelling units*, *sleeping units* and classrooms in buildings with attached private garages.

Exceptions:

1. Carbon monoxide detection shall not be required where there are no communicating openings between the private garage and the *dwelling unit*, *sleeping unit* or classroom.
2. Carbon monoxide detection shall not be required in *dwelling units*, *sleeping units* and classrooms located more than one story above or below a private garage.
3. Carbon monoxide detection shall not be required where the private garage connects to the building through an open-ended corridor.
4. Where carbon monoxide detection is provided in an approved location between openings to a private garage and *dwelling units*, *sleeping units* or classrooms, carbon monoxide detection shall not be required in the *dwelling units*, *sleeping units* or classrooms.

[F] 915.1.6 Exempt garages. For determining compliance with Section 915.1.5, an *open parking garage* complying with Section 406.5 or an enclosed parking garage complying with Section 406.6 shall not be considered a private garage.

[F] 915.2 Locations. Where required by Section 915.1.1, carbon monoxide detection shall be installed in the locations specified in Sections 915.2.1 through 915.2.3.

[F] 915.2.1 Dwelling units. Carbon monoxide detection shall be installed in *dwelling units* outside of each separate sleeping area in the immediate vicinity of the bedrooms. Where a fuel-burning appliance is located within a bedroom or its attached bathroom, carbon monoxide detection shall be installed within the bedroom.

[F] 915.2.2 Sleeping units. Carbon monoxide detection shall be installed in *sleeping units*.

Exception: Carbon monoxide detection shall be allowed to be installed outside of each separate sleeping area in the immediate vicinity of the *sleeping unit* where the *sleeping unit* or its attached bathroom does not contain a fuel-burning appliance and is not served by a forced air furnace.

[F] 915.2.3 Group E occupancies. Carbon monoxide detection shall be installed in classrooms in Group E occupancies. Carbon monoxide alarm signals shall be automatically transmitted to an on-site location that is staffed by school personnel.

Exception: Carbon monoxide alarm signals shall not be required to be automatically transmitted to an on-site location that is staffed by school personnel in Group E occupancies with an occupant load of 30 or less.

[F] 915.3 Detection equipment. Carbon monoxide detection required by Sections 915.1 through 915.2.3 shall be provided by carbon monoxide alarms complying with Section 915.4 or carbon monoxide detection systems complying with Section 915.5.

[F] 915.4 Carbon monoxide alarms. Carbon monoxide alarms shall comply with Sections 915.4.1 through 915.4.3.

[F] 915.4.1 Power source. Carbon monoxide alarms shall receive their primary power from the building wiring where such wiring is served from a commercial source, and when primary power is interrupted, shall receive power from a battery. Wiring shall be permanent and without a disconnecting switch other than that required for overcurrent protection.

Exception: Where installed in buildings without commercial power, battery-powered carbon monoxide alarms shall be an acceptable alternative.

[F] 915.4.2 Listings. Carbon monoxide alarms shall be listed in accordance with UL 2034.

[F] 915.4.3 Combination alarms. Combination carbon monoxide/smoke alarms shall be an acceptable alternative to carbon monoxide alarms. Combination carbon monoxide/smoke alarms shall be listed in accordance with UL 2034 and UL 217.

[F] 915.5 Carbon monoxide detection systems. Carbon monoxide detection systems shall be an acceptable alternative to carbon monoxide alarms and shall comply with Sections 915.5.1 through 915.5.3.

[F] 915.5.1 General. Carbon monoxide detection systems shall comply with NFPA 720. Carbon monoxide detectors shall be listed in accordance with UL 2075.

[F] 915.5.2 Locations. Carbon monoxide detectors shall be installed in the locations specified in Section 915.2. These locations supersede the locations specified in NFPA 720.

[F] 915.5.3 Combination detectors. Combination carbon monoxide/smoke detectors installed in carbon monoxide detection systems shall be an acceptable alternative to carbon monoxide detectors, provided they are listed in accordance with UL 2075 and UL 268.

[F] 915.6 Maintenance. Carbon monoxide alarms and carbon monoxide detection systems shall be maintained in accordance with the *International Fire Code*.

SECTION 916
EMERGENCY RESPONDER RADIO COVERAGE

[F] 916.1 General. Emergency responder radio coverage shall be provided in all new buildings in accordance with Section 510 of the *International Fire Code*.

CHAPTER 10

MEANS OF EGRESS

User note: Code change proposals to sections preceded by the designation [F] will be considered by the International Fire Code Development Committee during the 2016 (Group B) Code Development Cycle. See explanation on page iv.

SECTION 1001
ADMINISTRATION

1001.1 General. Buildings or portions thereof shall be provided with a *means of egr ess* system as required by this chapter. The provisions of this chapter shall control the design, construction and arrangement of *means of egress* components required to provide an *approved means of egress* from structures and portions thereof.

1001.2 Minimum requirements. It shall be unlawful to alter a building or structure in a manner that will reduce the number of *exits* or the minimum width or required capacity of the *means of egress* to less than required by this code.

[F] 1001.3 Maintenance. *Means of egress* shall be maintained in accordance with the *International Fire Code*.

[F] 1001.4 Fire safety and evacuation plans. Fire safety and evacuation plans shall be provided for all occupancies and buildings where required by the *International Fire Code*. Such fire safety and evacuation plans shall comply with the applicable provisions of Sections 401.2 and 404 of the *International Fire Code*.

SECTION 1002
DEFINITIONS

1002.1 Definitions. The following terms are defined in Chapter 2:

ACCESSIBLE MEANS OF EGRESS.
AISLE.
AISLE ACCESSWAY.
ALTERNATING TREAD DEVICE.
AREA OF REFUGE.
BLEACHERS.
BREAKOUT.
COMMON PATH OF EGRESS TRAVEL.
CORRIDOR.
DOOR, BALANCED.
EGRESS COURT.
EMERGENCY ESCAPE AND RESCUE OPENING.
EXIT.
EXIT ACCESS.
EXIT ACCESS DOORWAY.
EXIT ACCESS RAMP.
EXIT ACCESS STAIRWAY.
EXIT DISCHARGE.
EXIT DISCHARGE, LEVEL OF.
EXIT, HORIZONTAL.
EXIT PASSAGEWAY.
EXTERIOR EXIT RAMP.
EXTERIOR EXIT STAIRWAY.
FIRE EXIT HARDWARE.
FIXED SEATING.
FLIGHT.
FLOOR AREA, GROSS.
FLOOR AREA, NET.
FOLDING AND TELESCOPIC SEATING.
GRANDSTAND.
GUARD.
HANDRAIL.
INTERIOR EXIT RAMP.
INTERIOR EXIT STAIRWAY.
LOW ENERGY POWER-OPERATED DOOR.
MEANS OF EGRESS.
MERCHANDISE PAD.
NOSING.
OCCUPANT LOAD.
OPEN-ENDED CORRIDOR.
PANIC HARDWARE.
PHOTOLUMINESCENT.
POWER-ASSISTED DOOR.
POWER-OPERATED DOOR.
PUBLIC WAY.
RAMP.
SCISSOR STAIRWAY.
SELF-LUMINOUS.
SMOKE-PROTECTED ASSEMBLY SEATING.
STAIR.
STAIRWAY.
STAIRWAY, SPIRAL.
WINDER.

SECTION 1003
GENERAL MEANS OF EGRESS

1003.1 Applicability. The general requirements specified in Sections 1003 through 1015 shall apply to all three elements of the *means of egress* system, in addition to those specific requirements for the *exit access*, the *exit* and the *exit discharge* detailed elsewhere in this chapter.

1003.2 Ceiling height. The *means of egress* shall have a ceiling height of not less than 7 feet 6 inches (2286 mm).

Exceptions:

1. Sloped ceilings in accordance with Section 1208.2.
2. Ceilings of *dwelling units* and *sleeping units* within residential occupancies in accordance with Section 1208.2.
3. Allowable projections in accordance with Section 1003.3.
4. *Stair* headroom in accordance with Section 1011.3.
5. Door height in accordance with Section 1010.1.1.
6. *Ramp* headroom in accordance with Section 1012.5.2.
7. The clear height of floor levels in vehicular and pedestrian traffic areas of public and private parking garages in accordance with Section 406.4.1.
8. Areas above and below *mezzanine* floors in accordance with Section 505.2.

1003.3 Protruding objects. Protruding objects on *circulation paths* shall comply with the requirements of Sections 1003.3.1 through 1003.3.4.

1003.3.1 Headroom. Protruding objects are permitted to extend below the minimum ceiling height required by Section 1003.2 where a minimum headroom of 80 inches (2032 mm) is provided over any walking surface, including walks, *corridors*, *aisles* and passageways. Not more than 50 percent of the ceiling area of a *means of egress* shall be reduced in height by protruding objects.

Exception: Door closers and stops shall not reduce headroom to less than 78 inches (1981 mm).

A barrier shall be provided where the vertical clearance is less than 80 inches (2032 mm) high. The leading edge of such a barrier shall be located 27 inches (686 mm) maximum above the floor.

1003.3.2 Post-mounted objects. A free-standing object mounted on a post or pylon shall not overhang that post or pylon more than 4 inches (102 mm) where the lowest point of the leading edge is more than 27 inches (686 mm) and less than 80 inches (2032 mm) above the walking surface. Where a sign or other obstruction is mounted between posts or pylons and the clear distance between the posts or pylons is greater than 12 inches (305 mm), the lowest edge of such sign or obstruction shall be 27 inches (686 mm) maximum or 80 inches (2032 mm) minimum above the finished floor or ground.

Exception: These requirements shall not apply to sloping portions of *handrails* between the top and bottom riser of *stairs* and above the *ramp* run.

1003.3.3 Horizontal projections. Objects with leading edges more than 27 inches (685 mm) and not more than 80 inches (2030 mm) above the floor shall not project horizontally more than 4 inches (102 mm) into the *circulation path*.

Exception: *Handrails* are permitted to protrude $4^1/_2$ inches (114 mm) from the wall.

1003.3.4 Clear width. Protruding objects shall not reduce the minimum clear width of *accessible routes*.

1003.4 Floor surface. Walking surfaces of the *means of egress* shall have a slip-resistant surface and be securely attached.

1003.5 Elevation change. Where changes in elevation of less than 12 inches (305 mm) exist in the *means of egress*, sloped surfaces shall be used. Where the slope is greater than one unit vertical in 20 units horizontal (5-percent slope), *ramps* complying with Section 1012 shall be used. Where the difference in elevation is 6 inches (152 mm) or less, the *ramp* shall be equipped with either *handrails* or floor finish materials that contrast with adjacent floor finish materials.

Exceptions:

1. A single step with a maximum riser height of 7 inches (178 mm) is permitted for buildings with occupancies in Groups F, H, R-2, R-3, S and U at exterior doors not required to be *accessible* by Chapter 11.
2. A *stair* with a single riser or with two risers and a tread is permitted at locations not required to be *accessible* by Chapter 11 where the risers and treads comply with Section 1011.5, the minimum depth of the tread is 13 inches (330 mm) and not less than one *handrail* complying with Section 1014 is provided within 30 inches (762 mm) of the centerline of the normal path of egress travel on the *stair*.
3. A step is permitted in *aisles* serving seating that has a difference in elevation less than 12 inches (305 mm) at locations not required to be *accessible* by Chapter 11, provided that the risers and treads comply with Section 1029.13 and the *aisle* is provided with a *handrail* complying with Section 1029.15.

Throughout a story in a Group I-2 occupancy, any change in elevation in portions of the *means of egress* that serve nonambulatory persons shall be by means of a *ramp* or sloped walkway.

1003.6 Means of egress continuity. The path of egress travel along a *means of egress* shall not be interrupted by a building element other than a *means of egress* component as specified in this chapter. Obstructions shall not be placed in the minimum width or required capacity of a *means of egress* component except projections permitted by this chapter. The minimum width or required capacity of a *means of egress* system shall not be diminished along the path of egress travel.

1003.7 Elevators, escalators and moving walks. Elevators, escalators and moving walks shall not be used as a compo-

nent of a required *means of egress* from any other part of the building.

Exception: Elevators used as an accessible *means of egress* in accordance with Section 1009.4.

SECTION 1004
OCCUPANT LOAD

1004.1 Design occupant load. In determining *means of egress* requirements, the number of occupants for whom *means of egress* facilities are provided shall be determined in accordance with this section.

1004.1.1 Cumulative occupant loads. Where the path of egress travel includes intervening rooms, areas or spaces, cumulative *occupant loads* shall be determined in accordance with this section.

1004.1.1.1 Intervening spaces or accessory areas. Where occupants egress from one or more rooms, areas or spaces through others, the design *occupant load* shall be the combined *occupant load* of interconnected accessory or intervening spaces. Design of egress path capacity shall be based on the cumulative portion of *occupant loads* of all rooms, areas or spaces to that point along the path of egress travel.

1004.1.1.2 Adjacent levels for mezzanines. That portion of the *occupant load* of a *mezzanine* with required egress through a room, area or space on an adjacent level shall be added to the *occupant load* of that room, area or space.

1004.1.1.3 Adjacent stories. Other than for the egress components designed for convergence in accordance with Section 1005.6, the *occupant load* from separate stories shall not be added.

1004.1.2 Areas without fixed seating. The number of occupants shall be computed at the rate of one occupant per unit of area as prescribed in Table 1004.1.2. For areas without *fixed seating*, the occupant load shall be not less than that number determined by dividing the floor area under consideration by the *occupant load* factor assigned to the function of the space as set forth in Table 1004.1.2. Where an intended function is not listed in Table 1004.1.2, the *building official* shall establish a function based on a listed function that most nearly resembles the intended function.

Exception: Where *approved* by the *building official*, the actual number of occupants for whom each occupied space, floor or building is designed, although less than those determined by calculation, shall be permitted to be used in the determination of the design *occupant load*.

1004.2 Increased occupant load. The *occupant load* permitted in any building, or portion thereof, is permitted to be increased from that number established for the occupancies in Table 1004.1.2, provided that all other requirements of the code are met based on such modified number and the *occupant load* does not exceed one occupant per 7 square feet (0.65 m^2) of occupiable floor space. Where required by the *building official*, an *approved aisle*, seating or fixed equip-

TABLE 1004.1.2
MAXIMUM FLOOR AREA ALLOWANCES PER OCCUPANT

FUNCTION OF SPACE	OCCUPANT LOAD FACTOR[a]
Accessory storage areas, mechanical equipment room	300 gross
Agricultural building	300 gross
Aircraft hangars	500 gross
Airport terminal	
Baggage claim	20 gross
Baggage handling	300 gross
Concourse	100 gross
Waiting areas	15 gross
Assembly	
Gaming floors (keno, slots, etc.)	11 gross
Exhibit gallery and museum	30 net
Assembly with fixed seats	See Section 1004.4
Assembly without fixed seats	
Concentrated (chairs only—not fixed)	7 net
Standing space	5 net
Unconcentrated (tables and chairs)	15 net
Bowling centers, allow 5 persons for each lane including 15 feet of runway, and for additional areas	7 net
Business areas	100 gross
Courtrooms—other than fixed seating areas	40 net
Day care	35 net
Dormitories	50 gross
Educational	
Classroom area	20 net
Shops and other vocational room areas	50 net
Exercise rooms	50 gross
Group H-5 Fabrication and manufacturing areas	200 gross
Industrial areas	100 gross
Institutional areas	
Inpatient treatment areas	240 gross
Outpatient areas	100 gross
Sleeping areas	120 gross
Kitchens, commercial	200 gross
Library	
Reading rooms	50 net
Stack area	100 gross
Locker rooms	50 gross
Mall buildings—covered and open	See Section 402.8.2
Mercantile	60 gross
Storage, stock, shipping areas	300 gross
Parking garages	200 gross
Residential	200 gross
Skating rinks, swimming pools	
Rink and pool	50 gross
Decks	15 gross
Stages and platforms	15 net
Warehouses	500 gross

For SI: 1 square foot = 0.0929 m^2, 1 foot = 304.8 mm.

a. Floor area in square feet per occupant.

1837

ment diagram substantiating any increase in *occupant load* shall be submitted. Where required by the *building official*, such diagram shall be posted.

1004.3 Posting of occupant load. Every room or space that is an assembly occupancy shall have the *occupant load* of the room or space posted in a conspicuous place, near the main *exit* or *exit access doorway* from the room or space. Posted signs shall be of an approved legible permanent design and shall be maintained by the owner or the owner's authorized agent.

1004.4 Fixed seating. For areas having *fixed seats* and *aisles*, the *occupant load* shall be determined by the number of *fixed seats* installed therein. The *occupant load* for areas in which *fixed seating* is not installed, such as waiting spaces, shall be determined in accordance with Section 1004.1.2 and added to the number of *fixed seats*.

The *occupant load* of *wheelchair spaces* and the associated companion seat shall be based on one occupant for each *wheelchair space* and one occupant for the associated companion seat provided in accordance with Section 1108.2.3.

For areas having *fixed seating* without dividing arms, the *occupant load* shall be not less than the number of seats based on one person for each 18 inches (457 mm) of seating length.

The *occupant load* of seating booths shall be based on one person for each 24 inches (610 mm) of booth seat length measured at the backrest of the seating booth.

1004.5 Outdoor areas. *Yards*, patios, *courts* and similar outdoor areas accessible to and usable by the building occupants shall be provided with *means of egress* as required by this chapter. The *occupant load* of such outdoor areas shall be assigned by the *building official* in accordance with the anticipated use. Where outdoor areas are to be used by persons in addition to the occupants of the building, and the path of egress travel from the outdoor areas passes through the building, *means of egress* requirements for the building shall be based on the sum of the *occupant loads* of the building plus the outdoor areas.

Exceptions:

1. Outdoor areas used exclusively for service of the building need only have one *means of egress*.
2. Both outdoor areas associated with Group R-3 and individual dwelling units of Group R-2.

1004.6 Multiple occupancies. Where a building contains two or more occupancies, the *means of egress* requirements shall apply to each portion of the building based on the occupancy of that space. Where two or more occupancies utilize portions of the same *means of egress* system, those egress components shall meet the more stringent requirements of all occupancies that are served.

SECTION 1005
MEANS OF EGRESS SIZING

1005.1 General. All portions of the *means of egress* system shall be sized in accordance with this section.

Exception: *Aisles* and *aisle accessways* in rooms or spaces used for assembly purposes complying with Section 1029.

1005.2 Minimum width based on component. The minimum width, in inches (mm), of any *means of egress* components shall be not less than that specified for such component, elsewhere in this code.

1005.3 Required capacity based on occupant load. The required capacity, in inches (mm), of the *means of egress* for any room, area, space or story shall be not less than that determined in accordance with Sections 1005.3.1 and 1005.3.2:

1005.3.1 Stairways. The capacity, in inches, of *means of egress stairways* shall be calculated by multiplying the *occupant load* served by such *stairways* by a means of egress capacity factor of 0.3 inch (7.6 mm) per occupant. Where *stairways* serve more than one story, only the occupant load of each story considered individually shall be used in calculating the required capacity of the *stairways* serving that story.

Exceptions:

1. For other than Group H and I-2 occupancies, the capacity, in inches, of *means of egress stairways* shall be calculated by multiplying the *occupant load* served by such *stairways* by a means of egress capacity factor of 0.2 inch (5.1 mm) per occupant in buildings equipped throughout with an automatic sprinkler system installed in accordance with Section 903.3.1.1 or 903.3.1.2 and an *emergency voice/alarm communication* system in accordance with Section 907.5.2.2.
2. Facilities with *smoke-protected assembly seating* shall be permitted to use the capacity factors in Table 1029.6.2 indicated for stepped aisles for *exit access* or *exit stairways* where the entire path for *means of egress* from the seating to the *exit discharge* is provided with a smoke control system complying with Section 909.
3. Facilities with outdoor *smoke-protected assembly seating* shall be permitted to the capacity factors in Section 1029.6.3 indicated for stepped aisles for *exit access* or *exit stairways* where the entire path for *means of egress* from the seating to the *exit discharge* is open to the outdoors.

1005.3.2 Other egress components. The capacity, in inches, of *means of egress* components other than *stairways* shall be calculated by multiplying the *occupant load* served by such component by a means of egress capacity factor of 0.2 inch (5.1 mm) per occupant.

Exceptions:

1. For other than Group H and I-2 occupancies, the capacity, in inches, of *means of egress* components other than *stairways* shall be calculated by multiplying the *occupant load* served by such component by a means of egress capacity factor of 0.15 inch (3.8 mm) per occupant in buildings equipped throughout with an automatic sprinkler system installed in accordance with Section 903.3.1.1 or 903.3.1.2 and an *emergency voice/alarm communication* system in accordance with Section 907.5.2.2.
2. Facilities with *smoke-protected assembly seating* shall be permitted to use the capacity factors in Table 1029.6.2 indicated for level or ramped *aisles* for *means of egress* components other than *stairways* where the entire path for *means of egress* from the seating to the *exit discharge* is provided with a smoke control system complying with Section 909.
3. Facilities with outdoor *smoke-protected assembly seating* shall be permitted to the capacity factors in Section 1029.6.3 indicated for level or ramped *aisles* for *means of egress* components other than *stairways* where the entire path for *means of egress* from the seating to the *exit discharge* is open to the outdoors.

1005.4 Continuity. The minimum width or required capacity of the *means of egress* required from any story of a building shall not be reduced along the path of egress travel until arrival at the public way.

1005.5 Distribution of minimum width and required capacity. Where more than one *exit*, or access to more than one *exit*, is required, the *means of egress* shall be configured such that the loss of any one *exit*, or access to one *exit*, shall not reduce the available capacity or width to less than 50 percent of the required capacity or width.

1005.6 Egress convergence. Where the *means of egress* from stories above and below converge at an intermediate level, the capacity of the *means of egress* from the point of convergence shall be not less than the largest minimum width or the sum of the required capacities for the *stairways* or *ramps* serving the two adjacent stories, whichever is larger.

1005.7 Encroachment. Encroachments into the required *means of egress* width shall be in accordance with the provisions of this section.

1005.7.1 Doors. Doors, when fully opened, shall not reduce the required width by more than 7 inches (178 mm). Doors in any position shall not reduce the required width by more than one-half.

Exceptions:

1. Surface-mounted latch release hardware shall be exempt from inclusion in the 7-inch maximum (178 mm) encroachment where both of the following conditions exist:
   1.1. The hardware is mounted to the side of the door facing away from the adjacent wall where the door is in the open position.
   1.2. The hardware is mounted not less than 34 inches (865 mm) nor more than 48 inches (1219 mm) above the finished floor.
2. The restrictions on door swing shall not apply to doors within individual *dwelling units* and *sleeping units* of Group R-2 occupancies and *dwelling units* of Group R-3 occupancies.

1005.7.2 Other projections. *Handrail* projections shall be in accordance with the provisions of Section 1014.8. Other nonstructural projections such as trim and similar decorative features shall be permitted to project into the required width not more than $1^1/_2$ inches (38 mm) on each side.

Exception: Projections are permitted in corridors within Group I-2 Condition 1 in accordance with Section 407.4.3.

1005.7.3 Protruding objects. Protruding objects shall comply with the applicable requirements of Section 1003.3.

SECTION 1006
NUMBER OF EXITS AND EXIT ACCESS DOORWAYS

1006.1 General. The number of *exits* or *exit access doorways* required within the *means of egress* system shall comply with the provisions of Section 1006.2 for spaces, including *mezzanines*, and Section 1006.3 for *stories*.

1006.2 Egress from spaces. Rooms, areas or spaces, including *mezzanines*, within a *story* or *basement* shall be provided with the number of *exits* or access to *exits* in accordance with this section.

1006.2.1 Egress based on occupant load and common path of egress travel distance. Two *exits* or *exit access doorways* from any space shall be provided where the design *occupant load* or the *common path of egress travel* distance exceeds the values listed in Table 1006.2.1.

Exceptions:

1. In Group R-2 and R-3 occupancies, one *means of egress* is permitted within and from individual *dwelling units* with a maximum *occupant load* of 20 where the *dwelling unit* is equipped through-

out with an *automatic sprinkler* system in accordance with Section 903.3.1.1 or 903.3.1.2 and the *common path of egress travel* does not exceed 125 feet (38 100 mm).

2. *Care suites* in Group I-2 occupancies complying with Section 407.4.

1006.2.1.1 Three or more exits or exit access doorways. Three *exits* or *exit access doorways* shall be provided from any space with an occupant load of 501 to 1,000. Four *exits* or *exit access doorways* shall be provided from any space with an occupant load greater than 1,000.

1006.2.2 Egress based on use. The numbers of *exits* or access to *exits* shall be provided in the uses described in Sections 1006.2.2.1 through 1006.2.2.5.

1006.2.2.1 Boiler, incinerator and furnace rooms. Two *exit access doorways* are required in boiler, incinerator and furnace rooms where the area is over 500 square feet (46 m^2) and any fuel-fired equipment exceeds 400,000 British thermal units (Btu) (422 000 KJ) input capacity. Where two *exit access doorways* are required, one is permitted to be a fixed ladder or an *alternating tread device. Exit access doorways* shall be separated by a horizontal distance equal to one-half the length of the maximum overall diagonal dimension of the room.

1006.2.2.2 Refrigeration machinery rooms. Machinery rooms larger than 1,000 square feet (93 m^2) shall have not less than two *exits* or *exit access doorways*. Where two *exit access doorways* are required, one such doorway is permitted to be served by a fixed ladder or an *alternating tread device. Exit access doorways* shall be separated by a horizontal distance equal to one-half the maximum horizontal dimension of the room.

All portions of machinery rooms shall be within 150 feet (45 720 mm) of an *exit* or *exit access doorway*. An increase in *exit access* travel distance is permitted in accordance with Section 1017.1.

Doors shall swing in the direction of egress travel, regardless of the *occupant load* served. Doors shall be tight fitting and self-closing.

1006.2.2.3 Refrigerated rooms or spaces. Rooms or spaces having a floor area larger than 1,000 square feet (93 m^2), containing a refrigerant evaporator and maintained at a temperature below 68°F (20°C), shall have access to not less than two *exits* or *exit access doorways*.

Exit access travel distance shall be determined as specified in Section 1017.1, but all portions of a refrigerated room or space shall be within 150 feet (45 720 mm) of an *exit* or *exit access doorway* where such rooms are not protected by an approved *automatic*

TABLE 1006.2.1
SPACES WITH ONE EXIT OR EXIT ACCESS DOORWAY

OCCUPANCY	MAXIMUM OCCUPANT LOAD OF SPACE	MAXIMUM COMMON PATH OF EGRESS TRAVEL DISTANCE (feet)		
		Without Sprinkler System (feet)		With Sprinkler System (feet)
		Occupant Load		
		OL ≤ 30	OL > 30	
A[c], E, M	49	75	75	75[a]
B	49	100	75	100[a]
F	49	75	75	100[a]
H-1, H-2, H-3	3	NP	NP	25[b]
H-4, H-5	10	NP	NP	75[b]
I-1, I-2[d], I-4	10	NP	NP	75[a]
I-3	10	NP	NP	100[a]
R-1	10	NP	NP	75[a]
R-2	10	NP	NP	125[a]
R-3[e]	10	NP	NP	125[a]
R-4[e]	10	75	75	125[a]
S[f]	29	100	75	100[a]
U	49	100	75	75[a]

For SI: 1 foot = 304.8 mm.

NP = Not Permitted.

a. Buildings equipped throughout with an *automatic sprinkler system* in accordance with Section 903.3.1.1 or 903.3.1.2. See Section 903 for occupancies where *automatic sprinkler systems* are permitted in accordance with Section 903.3.1.2.

b. Group H occupancies equipped throughout with an *automatic sprinkler system* in accordance with Section 903.2.5.

c. For a room or space used for assembly purposes having *fixed seating*, see Section 1029.8.

d. For the travel distance limitations in Group I-2, see Section 407.4.

e. The length of *common path of egress travel* distance in a Group R-3 occupancy located in a mixed occupancy building or within a Group R-3 or R-4 *congregate living facility*.

f. The length of *common path of egress travel* distance in a Group S-2 *open parking garage* shall be not more than 100 feet.

sprinkler system. Egress is allowed through adjoining refrigerated rooms or spaces.

Exception: Where using refrigerants in quantities limited to the amounts based on the volume set forth in the *International Mechanical Code*.

** **1006.2.2.4 Day care means of egress.** Day care facilities, rooms or spaces where care is provided for more than 10 children that are $2^1/_2$ years of age or less, shall have access to not less than two *exits* or *exit access doorways*.

** **1006.2.2.5 Vehicular ramps.** Vehicular ramps shall not be considered as an *exit access ramp* unless pedestrian facilities are provided.

** **1006.3 Egress from stories or occupied roofs.** The *means of egress* system serving any *story* or occupied roof shall be provided with the number of *exits* or access to *exits* based on the aggregate *occupant load* served in accordance with this section. The *path of egress travel* to an *exit* shall not pass through more than one adjacent *story*.

Each *story* above the second *story* of a building shall have not less than one *interior* or *exterior exit stairway*, or interior or exterior *exit ramp*. Where three or more *exits* or access to *exits* are required, not less than 50 percent of the required *exits* shall be interior or exterior *exit stairways* or *ramps*.

Exceptions:

1. *Interior exit stairways* and *interior exit ramps* are not required in *open parking garages* where the *means of egress* serves only the *open parking garage*.
2. *Interior exit stairways* and *interior exit ramps* are not required in outdoor facilities where all portions of the *means of egress* are essentially open to the outside.

** **1006.3.1 Egress based on occupant load.** Each *story* and occupied roof shall have the minimum number of *exits*, or access to *exits*, as specified in Table 1006.3.1. A single *exit* or access to a single *exit* shall be permitted in accordance with Section 1006.3.2. The required number of *exits*, or *exit access stairways* or *ramps* providing access to *exits*, from any *story* or occupied roof shall be maintained until arrival at the *exit discharge* or a *public way*.

TABLE 1006.3.1
MINIMUM NUMBER OF EXITS OR ACCESS TO EXITS PER STORY

OCCUPANT LOAD PER STORY	MINIMUM NUMBER OF EXITS OR ACCESS TO EXITS FROM STORY
1-500	2
501-1,000	3
More than 1,000	4

1006.3.2 Single exits. A single *exit* or access to a single *exit* shall be permitted from any *story* or occupied roof where one of the following conditions exists: **

1. The *occupant load*, number of *dwelling units* and *exit access* travel distance do not exceed the values in Table 1006.3.2(1) or 1006.3.2(2).
2. Rooms, areas and spaces complying with Section 1006.2.1 with *exits* that discharge directly to the exterior at the *level of exit discharge*, are permitted to have one *exit* or access to a single *exit*.
3. Parking garages where vehicles are mechanically parked shall be permitted to have one *exit* or access to a single *exit*.
4. Group R-3 and R-4 occupancies shall be permitted to have one *exit* or access to a single *exit*.
5. Individual single-story or multistory *dwelling units* shall be permitted to have a single exit or access to a single *exit* from the *dwelling unit* provided that both of the following criteria are met:
   - 5.1. The *dwelling unit* complies with Section 1006.2.1 as a space with one *means of egress*.
   - 5.2. Either the *exit* from the *dwelling unit* discharges directly to the exterior at the *level of exit discharge*, or the *exit access* outside the dwelling unit's entrance door provides access to not less than two approved independent *exits*.

1006.3.2.1 Mixed occupancies. Where one *exit*, or *exit access stairway* or *ramp* providing access to *exits* at other *stories*, is permitted to serve individual *stories*, mixed occupancies shall be permitted to be served by single *exits* provided each individual occupancy complies with the applicable requirements of Table **

TABLE 1006.3.2(1)
STORIES WITH ONE EXIT OR ACCESS TO ONE EXIT FOR R-2 OCCUPANCIES **

STORY	OCCUPANCY	MAXIMUM NUMBER OF DWELLING UNITS	MAXIMUM COMMON PATH OF EGRESS TRAVEL DISTANCE
Basement, first, second or third story above grade plane	R-2[a, b]	4 dwelling units	125 feet
Fourth story above grade plane and higher	NP	NA	NA

For SI: 1 foot = 3048 mm.
NP = Not Permitted.
NA = Not Applicable.
a. Buildings classified as Group R-2 equipped throughout with an *automatic sprinkler system* in accordance with Section 903.3.1.1 or 903.3.1.2 and provided with *emergency escape and rescue openings* in accordance with Section 1030.
b. This table is used for R-2 occupancies consisting of *dwelling units*. For R-2 occupancies consisting of *sleeping units*, use Table 1006.3.2(2).

1006.3.2(1) or 1006.3.2(2) for that occupancy. Where applicable, cumulative *occupant loads* from adjacent occupancies shall be considered in accordance with the provisions of Section 1004.1. In each *story* of a mixed occupancy building, the maximum number of occupants served by a single *exit* shall be such that the sum of the ratios of the calculated number of occupants of the space divided by the allowable number of occupants indicated in Table 1006.3.2(2) for each occupancy does not exceed one. Where *dwelling units* are located on a story with other occupancies, the actual number of *dwelling units* divided by four plus the ratio from the other occupancy does not exceed one.

** **1006.3.2.2 Basements.** A *basement* provided with one *exit* shall not be located more than one *story* below *grade plane*.

SECTION 1007
EXIT AND EXIT ACCESS DOORWAY CONFIGURATION

1007.1 General. *Exits*, *exit access doorways*, and *exit access stairways* and *ramps* serving spaces, including individual building *stories*, shall be separated in accordance with the provisions of this section.

** **1007.1.1 Two exits or exit access doorways.** Where two *exits*, *exit access doorways*, *exit access stairways* or *ramps*, or any combination thereof, are required from any portion of the *exit access*, they shall be placed a distance apart equal to not less than one-half of the length of the maximum overall diagonal dimension of the building or area to be served measured in a straight line between them. Interlocking or *scissor stairways* shall be counted as one *exit stairway*.

Exceptions:

1. Where interior *exit stairways* or *ramps* are interconnected by a 1-hour fire-resistance-rated corridor conforming to the requirements of Section 1020, the required exit separation shall be measured along the shortest direct line of travel within the corridor.
2. Where a building is equipped throughout with an *automatic sprinkler system* in accordance with Section 903.3.1.1 or 903.3.1.2, the separation distance shall be not less than one-third of the length of the maximum overall diagonal dimension of the area served.

1007.1.1.1 Measurement point. The separation distance required in Section 1007.1.1 shall be measured in accordance with the following:

1. The separation distance to *exit* or *exit access doorways* shall be measured to any point along the width of the doorway.
2. The separation distance to *exit access stairways* shall be measured to the closest riser.
3. The separation distance to *exit access ramps* shall be measured to the start of the ramp run.

1007.1.2 Three or more exits or exit access doorways. ** Where access to three or more *exits* is required, not less than two *exit* or *exit access doorways* shall be arranged in accordance with the provisions of Section 1007.1.1. Additional required *exit* or *exit access doorways* shall be arranged a reasonable distance apart so that if one becomes blocked, the others will be available.

1007.1.3 Remoteness of exit access stairways or ramps. Where two *exit access stairways* or *ramps* provide the required *means of egress* to *exits* at another *story*, the required separation distance shall be maintained for all portions of such *exit access stairways* or *ramps*.

1007.1.3.1 Three or more exit access stairways or ramps. Where more than two *exit access stairways* or *ramps* provide the required *means of egress*, not less than two shall be arranged in accordance with Section 1007.1.3.

** **1006.3.2(2)**
STORIES WITH ONE EXIT OR ACCESS TO ONE EXIT FOR OTHER OCCUPANCIES

STORY	OCCUPANCY	MAXIMUM OCCUPANT LOAD PER STORY	MAXIMUM COMMON PATH OF EGRESS TRAVEL DISTANCE (feet)
First story above or below grade plane	A, B[b], E F[b], M, U	49	75
	H-2, H-3	3	25
	H-4, H-5, I, R-1, R-2[a, c], R-4	10	75
	S[b, d]	29	75
Second story above grade plane	B, F, M, S[d]	29	75
Third story above grade plane and higher	NP	NA	NA

For SI: 1 foot = 304.8 mm.
NP = Not Permitted.
NA = Not Applicable.

a. Buildings classified as Group R-2 equipped throughout with an *automatic sprinkler system* in accordance with Section 903.3.1.1 or 903.3.1.2 and provided with *emergency escape and rescue openings* in accordance with Section 1030.
b. Group B, F and S occupancies in buildings equipped throughout with an *automatic sprinkler system* in accordance with Section 903.3.1.1 shall have a maximum *exit access* travel distance of 100 feet.
c. This table is used for R-2 occupancies consisting of *sleeping units*. For R-2 occupancies consisting of *dwelling units*, use Table 1006.3.2(1).
d. The length of *exit access* travel distance in a Group S-2 *open parking garage* shall be not more than 100 feet.

SECTION 1008
MEANS OF EGRESS ILLUMINATION

1008.1 Means of egress illumination. Illumination shall be provided in the *means of egress* in accordance with Section 1008.2. Under emergency power, means of egress illumination shall comply with Section 1008.3.

1008.2 Illumination required. The *means of egress* serving a room or space shall be illuminated at all times that the room or space is occupied.

Exceptions:

1. Occupancies in Group U.
2. *Aisle accessways* in Group A.
3. *Dwelling units* and *sleeping units* in Groups R-1, R-2 and R-3.
4. *Sleeping units* of Group I occupancies.

1008.2.1 Illumination level under normal power. The *means of egress* illumination level shall be not less than 1 footcandle (11 lux) at the walking surface.

Exception: For auditoriums, theaters, concert or opera halls and similar assembly occupancies, the illumination at the walking surface is permitted to be reduced during performances by one of the following methods provided that the required illumination is automatically restored upon activation of a premises' fire alarm system:

1. Externally illuminated walking surfaces shall be permitted to be illuminated to not less than 0.2 footcandle (2.15 lux).
2. Steps, landings and the sides of ramps shall be permitted to be marked with self-luminous materials in accordance with Sections 1025.2.1, 1025.2.2 and 1025.2.4 by systems listed in accordance with UL 1994.

1008.2.2 Exit discharge. In Group I-2 occupancies where two or more exits are required, on the exterior landings required by Section 1010.6.1, means of egress illumination levels for the exit discharge shall be provided such that failure of any single lighting unit shall not reduce the illumination level on that landing to less than 1 footcandle (11 lux).

1008.3 Emergency power for illumination. The power supply for means of egress illumination shall normally be provided by the premises' electrical supply.

1008.3.1 General. In the event of power supply failure in rooms and spaces that require two or more means of egress, an emergency electrical system shall automatically illuminate all of the following areas:

1. *Aisles.*
2. *Corridors.*
3. *Exit access stairways* and *ramps.*

1008.3.2 Buildings. In the event of power supply failure in buildings that require two or more *means of egress*, an emergency electrical system shall automatically illuminate all of the following areas:

1. *Interior exit access stairways* and *ramps.*
2. *Interior* and *exterior exit stairways* and *ramps.*
3. *Exit passageways.*
4. Vestibules and areas on the level of discharge used for *exit discharge* in accordance with Section 1028.1.
5. Exterior landings as required by Section 1010.1.6 for *exit doorways* that lead directly to the *exit discharge.*

1008.3.3 Rooms and spaces. In the event of power supply failure, an emergency electrical system shall automatically illuminate all of the following areas:

1. Electrical equipment rooms.
2. Fire command centers.
3. Fire pump rooms.
4. Generator rooms.
5. Public restrooms with an area greater than 300 square feet (27.87 m^2).

1008.3.4 Duration. The emergency power system shall provide power for a duration of not less than 90 minutes and shall consist of storage batteries, unit equipment or an on-site generator. The installation of the emergency power system shall be in accordance with Section 2702.

1008.3.5 Illumination level under emergency power. Emergency lighting facilities shall be arranged to provide initial illumination that is not less than an average of 1 footcandle (11 lux) and a minimum at any point of 0.1 footcandle (1 lux) measured along the path of egress at floor level. Illumination levels shall be permitted to decline to 0.6 footcandle (6 lux) average and a minimum at any point of 0.06 footcandle (0.6 lux) at the end of the emergency lighting time duration. A maximum-to-minimum illumination uniformity ratio of 40 to 1 shall not be exceeded. In Group I-2 occupancies, failure of any single lighting unit shall not reduce the illumination level to less than 0.2 foot-candle (2.2 lux).

SECTION 1009
ACCESSIBLE MEANS OF EGRESS

1009.1 Accessible means of egress required. Accessible *means of egress* shall comply with this section. *Accessible* spaces shall be provided with not less than one accessible *means of egress*. Where more than one *means of egress* are required by Section 1006.2 or 1006.3 from any *accessible* space, each *accessible* portion of the space shall be served by not less than two accessible *means of egress*.

Exceptions:

1. Accessible *means of egress* are not required to be provided in existing buildings.

2. One accessible *means of egress* is required from an *accessible mezzanine* level in accordance with Section 1009.3, 1009.4 or 1009.5.
3. In assembly areas with ramped *aisles* or stepped *aisles*, one accessible *means of egress* is permitted where the *common path of egress travel* is *accessible* and meets the requirements in Section 1029.8.

1009.2 Continuity and components. Each required accessible *means of egress* shall be continuous to a *public way* and shall consist of one or more of the following components:

1. *Accessible routes* complying with Section 1104.
2. *Interior exit stairways* complying with Sections 1009.3 and 1023.
3. *Exit access stairways* complying with Sections 1009.3 and 1019.3 or 1019.4.
4. *Exterior exit stairways* complying with Sections 1009.3 and 1027 and serving levels other than the *level of exit discharge*.
5. Elevators complying with Section 1009.4.
6. Platform lifts complying with Section 1009.5.
7. *Horizontal exits* complying with Section 1026.
8. *Ramps* complying with Section 1012.
9. *Areas of refuge* complying with Section 1009.6.
10. Exterior areas for assisted rescue complying with Section 1009.7 serving exits at the *level of exit discharge*.

1009.2.1 Elevators required. In buildings where a required *accessible* floor is four or more *stories* above or below a *level of exit discharge*, not less than one required accessible *means of egress* shall be an elevator complying with Section 1009.4.

Exceptions:

1. In buildings equipped throughout with an *automatic sprinkler system* installed in accordance with Section 903.3.1.1 or 903.3.1.2, the elevator shall not be required on floors provided with a *horizontal exit* and located at or above the *levels of exit discharge*.
2. In buildings equipped throughout with an *automatic sprinkler system* installed in accordance with Section 903.3.1.1 or 903.3.1.2, the elevator shall not be required on floors provided with a *ramp* conforming to the provisions of Section 1012.

* **1009.3 Stairways.** In order to be considered part of an accessible *means of egress*, a *stairway* between *stories* shall have a clear width of 48 inches (1219 mm) minimum between *handrails* and shall either incorporate an *area of refuge* within an enlarged floor-level landing or shall be accessed from an *area of refuge* complying with Section 1009.6. *Exit access stairways* that connect levels in the same *story* are not permitted as part of an accessible *means of egress*.

Exceptions:

1. *Exit access stairways* providing *means of egress* from *mezzanines* are permitted as part of an accessible *means of egress*.
2. The clear width of 48 inches (1219 mm) between *handrails* is not required in buildings equipped throughout with an *automatic sprinkler* system installed in accordance with Section 903.3.1.1 or 903.3.1.2.
3. The clear width of 48 inches (1219 mm) between *handrails* is not required for *stairways* accessed from a refuge area in conjunction with a *horizontal exit*.
4. *Areas of refuge* are not required at *exit access stairways* where two-way communication is provided at the elevator landing in accordance with Section 1009.8.
5. *Areas of refuge* are not required at *stairways* in buildings equipped throughout with an *automatic sprinkler system* installed in accordance with Section 903.3.1.1 or 903.3.1.2.
6. *Areas of refuge* are not required at *stairways* serving *open parking garages*.
7. *Areas of refuge* are not required for *smoke-protected assembly seating* areas complying with Section 1029.6.2.
8. *Areas of refuge* are not required at *stairways* in Group R-2 occupancies.
9. *Areas of refuge* are not required for *stairways* accessed from a refuge area in conjunction with a *horizontal exit*.

1009.4 Elevators. In order to be considered part of an accessible *means of egress*, an elevator shall comply with the emergency operation and signaling device requirements of Section 2.27 of ASME A17.1. Standby power shall be provided in accordance with Chapter 27 and Section 3003. The elevator shall be accessed from an *area of refuge* complying with Section 1009.6.

Exceptions:

1. *Areas of refuge* are not required at the elevator in *open parking garages*.
2. *Areas of refuge* are not required in buildings and facilities equipped throughout with an *automatic sprinkler system* installed in accordance with Section 903.3.1.1 or 903.3.1.2.
3. *Areas of refuge* are not required at elevators not required to be located in a shaft in accordance with Section 712.

4. *Areas of refuge* are not required at elevators serving *smoke-protected assembly seating* areas complying with Section 1029.6.2.
5. *Areas of refuge* are not required for elevators accessed from a refuge area in conjunction with a *horizontal exit.*

1009.5 Platform lifts. Platform lifts shall be permitted to serve as part of an accessible *means of egress* where allowed as part of a required *accessible route* in Section 1109.8 except for Item 10. Standby power for the platform lift shall be provided in accordance with Chapter 27.

1009.6 Areas of refuge. Every required *area of refuge* shall be accessible from the space it serves by an accessible *means of egress.*

1009.6.1 Travel distance. The maximum travel distance from any *accessible* space to an *area of refuge* shall not exceed the *exit access* travel distance permitted for the occupancy in accordance with Section 1017.1.

1009.6.2 Stairway or elevator access. Every required *area of refuge* shall have direct access to a *stairway* complying with Sections 1009.3 and 1023 or an elevator complying with Section 1009.4.

1009.6.3 Size. Each *area of refuge* shall be sized to accommodate one *wheelchair space* of 30 inches by 48 inches (762 mm by 1219 mm) for each 200 occupants or portion thereof, based on the *occupant load* of the *area of refuge* and areas served by the *area of refuge*. Such *wheelchair spaces* shall not reduce the *means of egress* minimum width or required capacity. Access to any of the required *wheelchair spaces* in an *area of refuge* shall not be obstructed by more than one adjoining *wheelchair space.*

1009.6.4 Separation. Each *area of refuge* shall be separated from the remainder of the story by a *smoke barrier* complying with Section 709 or a *horizontal* exit complying with Section 1026. Each *area of refuge* shall be designed to minimize the intrusion of smoke.

Exceptions:

1. *Areas of refuge* located within an enclosure for *interior exit stairways* complying with Section 1023.
2. *Areas of refuge* in outdoor facilities where *exit access* is essentially open to the outside.

1009.6.5 Two-way communication. *Areas of refuge* shall be provided with a two-way communication system complying with Sections 1009.8.1 and 1009.8.2.

1009.7 Exterior areas for assisted rescue. Exterior areas for assisted rescue shall be accessed by an *accessible route* from the area served.

Where the *exit discharge* does not include an *accessible route* from an *exit* located on the *level of exit discharge* to a *public way*, an exterior area of assisted rescue shall be provided on the exterior landing in accordance with Sections 1009.7.1 through 1009.7.4.

1009.7.1 Size. Each exterior area for assisted rescue shall be sized to accommodate *wheelchair spaces* in accordance with Section 1009.6.3.

1009.7.2 Separation. Exterior walls separating the exterior area of assisted rescue from the interior of the building shall have a minimum *fire-resistance rating* of 1 hour, rated for exposure to fire from the inside. The fire-resistance-rated exterior wall construction shall extend horizontally 10 feet (3048 mm) beyond the landing on either side of the landing or equivalent fire-resistance-rated construction is permitted to extend out perpendicular to the exterior wall 4 feet (1220 mm) minimum on the side of the landing. The *fire-resistance-rated* construction shall extend vertically from the ground to a point 10 feet (3048 mm) above the floor level of the area for assisted rescue or to the roof line, whichever is lower. Openings within such *fire-resistance-rated* exterior walls shall be protected in accordance with Section 716.

1009.7.3 Openness. The exterior area for assisted rescue shall be open to the outside air. The sides other than the separation walls shall be not less than 50 percent open, and the open area shall be distributed so as to minimize the accumulation of smoke or toxic gases.

1009.7.4 Stairways. *Stairways* that are part of the *means of egress* for the exterior area for assisted rescue shall provide a clear width of 48 inches (1220 mm) between *handrails.*

Exception: The clear width of 48 inches (1220 mm) between *handrails* is not required at *stairways* serving buildings equipped throughout with an *automatic sprinkler system* installed in accordance with Section 903.3.1.1 or 903.3.1.2.

1009.8 Two-way communication. A two-way communication system complying with Sections 1009.8.1 and 1009.8.2 shall be provided at the landing serving each elevator or bank of elevators on each accessible floor that is one or more stories above or below the *level of exit discharge.*

Exceptions:

1. Two-way communication systems are not required at the landing serving each elevator or bank of elevators where the two-way communication system is provided within *areas of refuge* in accordance with Section 1009.6.5.
2. Two-way communication systems are not required on floors provided with *ramps* conforming to the provisions of Section 1012.
3. Two-way communication systems are not required at the landings serving only service elevators that are not designated as part of the accessible *means of egress* or serve as part of the required *accessible route* into a facility.
4. Two-way communication systems are not required at the landings serving only freight elevators.
5. Two-way communication systems are not required at the landing serving a private residence elevator.

1009.8.1 System requirements. Two-way communication systems shall provide communication between each required location and the *fire command center* or a central control point location *approved* by the fire department. Where the central control point is not a *constantly attended location*, a two-way communication system shall have a timed automatic telephone dial-out capability to a monitoring location or 9-1-1. The two-way communication system shall include both audible and visible signals.

1009.8.2 Directions. Directions for the use of the two-way communication system, instructions for summoning assistance via the two-way communication system and written identification of the location shall be posted adjacent to the two-way communication system. Signage shall comply with the ICC A117.1 requirements for visual characters.

1009.9 Signage. Signage indicating special accessibility provisions shall be provided as shown:

1. Each door providing access to an *area of refuge* from an adjacent floor area shall be identified by a sign stating: AREA OF REFUGE.
2. Each door providing access to an exterior area for assisted rescue shall be identified by a sign stating: EXTERIOR AREA FOR ASSISTED RESCUE.

Signage shall comply with the *ICC A117.1* requirements for visual characters and include the International Symbol of Accessibility. Where exit sign illumination is required by Section 1013.3, the signs shall be illuminated. Additionally, visual characters, raised character and braille signage complying with ICC A117.1 shall be located at each door to an *area of refuge* and exterior area for assisted rescue in accordance with Section 1013.4.

1009.10 Directional signage. Directional signage indicating the location of all other *means of egress* and which of those are accessible *means of egress* shall be provided at the following:

1. At *exits* serving a required *accessible* space but not providing an approved accessible *means of egress*.
2. At elevator landings.
3. Within *areas of refuge*.

1009.11 Instructions. In *areas of refuge* and exterior areas for assisted rescue, instructions on the use of the area under emergency conditions shall be posted. Signage shall comply with the ICC A117.1 requirements for visual characters. The instructions shall include all of the following:

1. Persons able to use the *exit stairway* do so as soon as possible, unless they are assisting others.
2. Information on planned availability of assistance in the use of *stairs* or supervised operation of elevators and how to summon such assistance.
3. Directions for use of the two-way communication system where provided.

SECTION 1010
DOORS, GATES AND TURNSTILES

1010.1 Doors. *Means of egress* doors shall meet the requirements of this section. Doors serving a *means of egress* system shall meet the requirements of this section and Section 1022.2. Doors provided for egress purposes in numbers greater than required by this code shall meet the requirements of this section.

Means of egress doors shall be readily distinguishable from the adjacent construction and finishes such that the doors are easily recognizable as doors. Mirrors or similar reflecting materials shall not be used on *means of egress* doors. *Means of egress* doors shall not be concealed by curtains, drapes, decorations or similar materials.

1010.1.1 Size of doors. The required capacity of each door opening shall be sufficient for the *occupant load* thereof and shall provide a minimum clear width of 32 inches (813 mm). Clear openings of doorways with swinging doors shall be measured between the face of the door and the stop, with the door open 90 degrees (1.57 rad). Where this section requires a minimum clear width of 32 inches (813 mm) and a door opening includes two door leaves without a mullion, one leaf shall provide a clear opening width of 32 inches (813 mm). The maximum width of a swinging door leaf shall be 48 inches (1219 mm) nominal. *Means of egress* doors in a Group I-2 occupancy used for the movement of beds shall provide a clear width not less than $41^1/_2$ inches (1054 mm). The height of door openings shall be not less than 80 inches (2032 mm).

Exceptions:

1. The minimum and maximum width shall not apply to door openings that are not part of the required *means of egress* in Group R-2 and R-3 occupancies.
2. Door openings to resident *sleeping units* in Group I-3 occupancies shall have a clear width of not less than 28 inches (711 mm).
3. Door openings to storage closets less than 10 square feet (0.93 m^2) in area shall not be limited by the minimum width.
4. Width of door leaves in revolving doors that comply with Section 1010.1.4.1 shall not be limited.
5. Door openings within a *dwelling unit* or *sleeping unit* shall be not less than 78 inches (1981 mm) in height.
6. Exterior door openings in *dwelling units* and *sleeping units*, other than the required *exit* door, shall be not less than 76 inches (1930 mm) in height.

7. In other than Group R-1 occupancies, the minimum widths shall not apply to interior egress doors within a *dwelling unit* or *sleeping unit* that is not required to be an *Accessible unit*, *Type A unit* or *Type B unit*.
8. Door openings required to be *accessible* within *Type B units* shall have a minimum clear width of 31.75 inches (806 mm).
9. Doors to walk-in freezers and coolers less than 1,000 square feet (93 m^2) in area shall have a maximum width of 60 inches (1524 mm).
10. In Group R-1 *dwelling units* or *sleeping units* not required to be *Accessible units*, the minimum width shall not apply to doors for showers or saunas.

1010.1.1.1 Projections into clear width. There shall not be projections into the required clear width lower than 34 inches (864 mm) above the floor or ground. Projections into the clear opening width between 34 inches (864 mm) and 80 inches (2032 mm) above the floor or ground shall not exceed 4 inches (102 mm).

Exception: Door closers and door stops shall be permitted to be 78 inches (1980 mm) minimum above the floor.

1010.1.2 Door swing. Egress doors shall be of the pivoted or side-hinged swinging type.

Exceptions:

1. Private garages, office areas, factory and storage areas with an *occupant load* of 10 or less.
2. Group I-3 occupancies used as a place of detention.
3. Critical or intensive care patient rooms within suites of health care facilities.
4. Doors within or serving a single *dwelling unit* in Groups R-2 and R-3.
5. In other than Group H occupancies, revolving doors complying with Section 1010.1.4.1.
6. In other than Group H occupancies, special purpose horizontal sliding, accordion or folding door assemblies complying with Section 1010.1.4.3.
7. Power-operated doors in accordance with Section 1010.1.4.2.
8. Doors serving a bathroom within an individual *sleeping unit* in Group R-1.
9. In other than Group H occupancies, manually operated horizontal sliding doors are permitted in a *means of egress* from spaces with an *occupant load* of 10 or less.

1010.1.2.1 Direction of swing. Pivot or side-hinged swinging doors shall swing in the direction of egress travel where serving a room or area containing an occupant load of 50 or more persons or a Group H occupancy.

1010.1.3 Door opening force. The force for pushing or pulling open interior swinging egress doors, other than fire doors, shall not exceed 5 pounds (22 N). These forces do not apply to the force required to retract latch bolts or disengage other devices that hold the door in a closed position. For other swinging doors, as well as sliding and folding doors, the door latch shall release when subjected to a 15-pound (67 N) force. The door shall be set in motion when subjected to a 30-pound (133 N) force. The door shall swing to a full-open position when subjected to a 15-pound (67 N) force.

1010.1.3.1 Location of applied forces. Forces shall be applied to the latch side of the door.

1010.1.4 Special doors. Special doors and security grilles shall comply with the requirements of Sections 1010.1.4.1 through 1010.1.4.4.

1010.1.4.1 Revolving doors. Revolving doors shall comply with the following:

1. Revolving doors shall comply with BHMA A156.27 and shall be installed in accordance with the manufacturer's instructions.
2. Each revolving door shall be capable of *breakout* in accordance with BHMA A156.27 and shall provide an aggregate width of not less than 36 inches (914 mm).
3. A revolving door shall not be located within 10 feet (3048 mm) of the foot or top of *stairways* or escalators. A dispersal area shall be provided between the *stairways* or escalators and the revolving doors.
4. The revolutions per minute (rpm) for a revolving door shall not exceed the maximum rpm as specified in BHMA A156.27. Manual revolving doors shall comply with Table 1010.1.4.1(1). Automatic or power-operated revolving doors shall comply with Table 1010.1.4.1(2).
5. An emergency stop switch shall be provided near each entry point of a revolving door within 48 inches (1220 mm) of the door and between 24 inches (610 mm) and 48 inches (1220 mm) above the floor. The activation area of the emergency stop switch button shall be not less than 1 inch (25 mm) in diameter and shall be red.
6. Each revolving door shall have a side-hinged swinging door that complies with Section 1010.1 in the same wall and within 10 feet (3048 mm) of the revolving door.
7. Revolving doors shall not be part of an *accessible route* required by Section 1009 and Chapter 11.

TABLE 1010.1.4.1(1)
MAXIMUM DOOR SPEED MANUAL REVOLVING DOORS

REVOLVING DOOR MAXIMUM NOMINAL DIAMETER (FT-IN)	MAXIMUM ALLOWABLE REVOLVING DOOR SPEED (RPM)
6-0	12
7-0	11
8-0	10
9-0	9
10-0	8

For SI: 1 inch = 25.4 mm, 1 foot = 304.8 mm.

TABLE 1010.1.4(2)
MAXIMUM DOOR SPEED AUTOMATIC OR POWER-OPERATED REVOLVING DOORS

REVOLVING DOOR MAXIMUM NOMINAL DIAMETER (FT-IN)	MAXIMUM ALLOWABLE REVOLVING DOOR SPEED (RPM)
8-0	7.2
9-0	6.4
10-0	5.7
11-0	5.2
12-0	4.8
12-6	4.6
14-0	4.1
16-0	3.6
17-0	3.4
18-0	3.2
20-0	2.9
24-0	2.4

For SI: 1 inch = 25.4 mm, 1 foot = 304.8 mm.

1010.1.4.1.1 Egress component. A revolving door used as a component of a *means of egress* shall comply with Section 1010.1.4.1 and the following three conditions:

1. Revolving doors shall not be given credit for more than 50 percent of the minimum width or required capacity.
2. Each revolving door shall be credited with a capacity based on not more than a 50-person *occupant load.*
3. Each revolving door shall provide for egress in accordance with BHMA A156.27 with a *breakout* force of not more than 130 pounds (578 N).

1010.1.4.1.2 Other than egress component. A revolving door used as other than a component of a *means of egress* shall comply with Section 1010.1.4.1. The *breakout* force of a revolving door not used as a component of a *means of egress* shall not be more than 180 pounds (801 N).

Exception: A *breakout* force in excess of 180 pounds (801 N) is permitted if the collapsing force is reduced to not more than 130 pounds (578 N) when not less than one of the following conditions is satisfied:

1. There is a power failure or power is removed to the device holding the door wings in position.
2. There is an actuation of the *automatic sprinkler system* where such system is provided.
3. There is an actuation of a smoke detection system that is installed in accordance with Section 907 to provide coverage in areas within the building that are within 75 feet (22 860 mm) of the revolving doors.
4. There is an actuation of a manual control switch, in an approved location and clearly identified, that reduces the *breakout* force to not more than 130 pounds (578 N).

1010.1.4.2 Power-operated doors. Where *means of egress* doors are operated or assisted by power, the design shall be such that in the event of power failure, the door is capable of being opened manually to permit *means of egress* travel or closed where necessary to safeguard *means of egress*. The forces required to open these doors manually shall not exceed those specified in Section 1010.1.3, except that the force to set the door in motion shall not exceed 50 pounds (220 N). The door shall be capable of swinging open from any position to the full width of the opening in which such door is installed when a force is applied to the door on the side from which egress is made. Power-operated swinging doors, power-operated sliding doors and power-operated folding doors shall comply with BHMA A156.10. Power-assisted swinging doors and low-energy power-operated swinging doors shall comply with BHMA A156.19.

Exceptions:

1. Occupancies in Group I-3.
2. Horizontal sliding doors complying with Section 1010.1.4.3.
3. For a biparting door in the emergency breakout mode, a door leaf located within a multiple-leaf opening shall be exempt from the minimum 32-inch (813 mm) single-leaf requirement of Section 1010.1.1, provided a minimum 32-inch (813 mm) clear opening is provided when the two biparting leaves meeting in the center are broken out.

1010.1.4.3 Special purpose horizontal sliding, accordion or folding doors. In other than Group H occupancies, special purpose horizontal sliding, accordion or folding door assemblies permitted to be a component of a *means of egress* in accordance with Exception 6 to

Section 1010.1.2 shall comply with all of the following criteria:

1. The doors shall be power operated and shall be capable of being operated manually in the event of power failure.
2. The doors shall be openable by a simple method from both sides without special knowledge or effort.
3. The force required to operate the door shall not exceed 30 pounds (133 N) to set the door in motion and 15 pounds (67 N) to close or open the door to the minimum required width.
4. The door shall be openable with a force not to exceed 15 pounds (67 N) when a force of 250 pounds (1100 N) is applied perpendicular to the door adjacent to the operating device.
5. The door assembly shall comply with the applicable *fire protection rating* and, where rated, shall be self-closing or automatic closing by smoke detection in accordance with Section 716.5.9.3, shall be installed in accordance with NFPA 80 and shall comply with Section 716.
6. The door assembly shall have an integrated standby power supply.
7. The door assembly power supply shall be electrically supervised.
8. The door shall open to the minimum required width within 10 seconds after activation of the operating device.

1010.1.4.4 Security grilles. In Groups B, F, M and S, horizontal sliding or vertical security grilles are permitted at the main *exit* and shall be openable from the inside without the use of a key or special knowledge or effort during periods that the space is occupied. The grilles shall remain secured in the full-open position during the period of occupancy by the general public. Where two or more *means of egress* are required, not more than one-half of the *exits* or *exit access doorways* shall be equipped with horizontal sliding or vertical security grilles.

1010.1.5 Floor elevation. There shall be a floor or landing on each side of a door. Such floor or landing shall be at the same elevation on each side of the door. Landings shall be level except for exterior landings, which are permitted to have a slope not to exceed 0.25 unit vertical in 12 units horizontal (2-percent slope).

Exceptions:

1. Doors serving individual *dwelling units* in Groups R-2 and R-3 where the following apply:
   1.1. A door is permitted to open at the top step of an interior *flight* of *stairs*, provided the door does not swing over the top step.
   1.2. Screen doors and storm doors are permitted to swing over *stairs* or landings.
2. Exterior doors as provided for in Section 1003.5, Exception 1, and Section 1022.2, which are not on an *accessible route*.
3. In Group R-3 occupancies not required to be *Accessible units*, *Type A units* or *Type B units*, the landing at an exterior doorway shall be not more than $7^3/_4$ inches (197 mm) below the top of the threshold, provided the door, other than an exterior storm or screen door, does not swing over the landing.
4. Variations in elevation due to differences in finish materials, but not more than $^1/_2$ inch (12.7 mm).
5. Exterior decks, patios or balconies that are part of *Type B dwelling units*, have impervious surfaces and that are not more than 4 inches (102 mm) below the finished floor level of the adjacent interior space of the dwelling unit.
6. Doors serving equipment spaces not required to be *accessible* in accordance with Section 1103.2.9 and serving an occupant load of five or less shall be permitted to have a landing on one side to be not more than 7 inches (178 mm) above or below the landing on the egress side of the door.

1010.1.6 Landings at doors. Landings shall have a width not less than the width of the *stairway* or the door, whichever is greater. Doors in the fully open position shall not reduce a required dimension by more than 7 inches (178 mm). Where a landing serves an *occupant load* of 50 or more, doors in any position shall not reduce the landing to less than one-half its required width. Landings shall have a length measured in the direction of travel of not less than 44 inches (1118 mm).

Exception: Landing length in the direction of travel in Groups R-3 and U and within individual units of Group R-2 need not exceed 36 inches (914 mm).

1010.1.7 Thresholds. Thresholds at doorways shall not exceed $^3/_4$ inch (19.1 mm) in height above the finished floor or landing for sliding doors serving *dwelling units* or $^1/_2$ inch (12.7 mm) above the finished floor or landing for other doors. Raised thresholds and floor level changes greater than $^1/_4$ inch (6.4 mm) at doorways shall be beveled with a slope not greater than one unit vertical in two units horizontal (50-percent slope).

Exceptions:

1. In occupancy Group R-2 or R-3, threshold heights for sliding and side-hinged exterior doors shall be permitted to be up to $7^3/_4$ inches (197 mm) in height if all of the following apply:
   1.1. The door is not part of the required *means of egress*.
   1.2. The door is not part of an *accessible route* as required by Chapter 11.
   1.3. The door is not part of an *Accessible unit*, *Type A unit* or *Type B unit*.

2. In *Type B units*, where Exception 5 to Section 1010.1.5 permits a 4-inch (102 mm) elevation change at the door, the threshold height on the exterior side of the door shall not exceed $4^3/_4$ inches (120 mm) in height above the exterior deck, patio or balcony for sliding doors or $4^1/_2$ inches (114 mm) above the exterior deck, patio or balcony for other doors.

1010.1.8 Door arrangement. Space between two doors in a series shall be 48 inches (1219 mm) minimum plus the width of a door swinging into the space. Doors in a series shall swing either in the same direction or away from the space between the doors.

Exceptions:

1. The minimum distance between horizontal sliding power-operated doors in a series shall be 48 inches (1219 mm).
2. Storm and screen doors serving individual *dwelling units* in Groups R-2 and R-3 need not be spaced 48 inches (1219 mm) from the other door.
3. Doors within individual *dwelling units* in Groups R-2 and R-3 other than within *Type A dwelling units*.

1010.1.9 Door operations. Except as specifically permitted by this section, egress doors shall be readily openable from the egress side without the use of a key or special knowledge or effort.

1010.1.9.1 Hardware. Door handles, pulls, latches, locks and other operating devices on doors required to be *accessible* by Chapter 11 shall not require tight grasping, tight pinching or twisting of the wrist to operate.

1010.1.9.2 Hardware height. Door handles, pulls, latches, locks and other operating devices shall be installed 34 inches (864 mm) minimum and 48 inches (1219 mm) maximum above the finished floor. Locks used only for security purposes and not used for normal operation are permitted at any height.

Exception: Access doors or gates in barrier walls and fences protecting pools, spas and hot tubs shall be permitted to have operable parts of the release of latch on self-latching devices at 54 inches (1370 mm) maximum above the finished floor or ground, provided the self-latching devices are not also self-locking devices operated by means of a key, electronic opener or integral combination lock.

1010.1.9.3 Locks and latches. Locks and latches shall be permitted to prevent operation of doors where any of the following exist:

1. Places of detention or restraint.
2. In buildings in occupancy Group A having an *occupant load* of 300 or less, Groups B, F, M and S, and in *places of religious worship*, the main door or doors are permitted to be equipped with key-operated locking devices from the egress side provided:
   - 2.1. The locking device is readily distinguishable as locked.
   - 2.2. A readily visible durable sign is posted on the egress side on or adjacent to the door stating: THIS DOOR TO REMAIN UNLOCKED WHEN THIS SPACE IS OCCUPIED. The sign shall be in letters 1 inch (25 mm) high on a contrasting background.
   - 2.3. The use of the key-operated locking device is revokable by the *building official* for due cause.
3. Where egress doors are used in pairs, *approved* automatic flush bolts shall be permitted to be used, provided that the door leaf having the automatic flush bolts does not have a doorknob or surface-mounted hardware.
4. Doors from individual *dwelling* or *sleeping units* of Group R occupancies having an *occupant load* of 10 or less are permitted to be equipped with a night latch, dead bolt or security chain, provided such devices are openable from the inside without the use of a key or tool.
5. *Fire doors* after the minimum elevated temperature has disabled the unlatching mechanism in accordance with *listed fire door* test procedures.

1010.1.9.4 Bolt locks. Manually operated flush bolts or surface bolts are not permitted.

Exceptions:

1. On doors not required for egress in individual *dwelling units* or *sleeping units*.
2. Where a pair of doors serves a storage or equipment room, manually operated edge- or surface-mounted bolts are permitted on the inactive leaf.
3. Where a pair of doors serves an *occupant load* of less than 50 persons in a Group B, F or S occupancy, manually operated edge- or surface-mounted bolts are permitted on the inactive leaf. The inactive leaf shall not contain doorknobs, panic bars or similar operating hardware.
4. Where a pair of doors serves a Group B, F or S occupancy, manually operated edge- or surface-mounted bolts are permitted on the inactive leaf provided such inactive leaf is not needed to meet egress capacity requirements and the building is equipped throughout with an *automatic sprinkler system* in accordance with Section 903.3.1.1. The inactive leaf shall not contain doorknobs, panic bars or similar operating hardware.
5. Where a pair of doors serves patient care rooms in Group I-2 occupancies, self-latching edge- or surface-mounted bolts are permitted on the inactive leaf provided that the inactive

leaf is not needed to meet egress capacity requirements and the inactive leaf shall not contain doorknobs, panic bars or similar operating hardware.

1010.1.9.5 Unlatching. The unlatching of any door or leaf shall not require more than one operation.

Exceptions:

1. Places of detention or restraint.
2. Where manually operated bolt locks are permitted by Section 1010.1.9.4.
3. Doors with automatic flush bolts as permitted by Section 1010.1.9.3, Item 3.
4. Doors from individual *dwelling units* and *sleeping units* of Group R occupancies as permitted by Section 1010.1.9.3, Item 4.

1010.1.9.5.1 Closet and bathroom doors in Group R-4 occupancies. In Group R-4 occupancies, closet doors that latch in the closed position shall be openable from inside the closet, and bathroom doors that latch in the closed position shall be capable of being unlocked from the ingress side.

1010.1.9.6 Controlled egress doors in Groups I-1 and I-2. Electric locking systems, including electromechanical locking systems and electromagnetic locking systems, shall be permitted to be locked in the means of egress in Group I-1 or I-2 occupancies where the clinical needs of persons receiving care require their containment. Controlled egress doors shall be permitted in such occupancies where the building is equipped throughout with an *automatic sprinkler system* in accordance with Section 903.3.1.1 or an *approved automatic smoke* or *heat detection system* installed in accordance with Section 907, provided that the doors are installed and operate in accordance with all of the following:

1. The door locks shall unlock on actuation of the *automatic sprinkler system* or *automatic fire detection system.*
2. The door locks shall unlock on loss of power controlling the lock or lock mechanism.
3. The door locking system shall be installed to have the capability of being unlocked by a switch located at the *fire command center*, a nursing station or other approved location. The switch shall directly break power to the lock.
4. A building occupant shall not be required to pass through more than one door equipped with a controlled egress locking system before entering an exit.
5. The procedures for unlocking the doors shall be described and approved as part of the emergency planning and preparedness required by Chapter 4 of the *International Fire Code.*
6. All clinical staff shall have the keys, codes or other means necessary to operate the locking systems.
7. Emergency lighting shall be provided at the door.
8. The door locking system units shall be listed in accordance with UL 294.

Exceptions:

1. Items 1 through 4 shall not apply to doors to areas occupied by persons who, because of clinical needs, require restraint or containment as part of the function of a psychiatric treatment area.
2. Items 1 through 4 shall not apply to doors to areas where a *listed* egress control system is utilized to reduce the risk of child abduction from nursery and obstetric areas of a Group I-2 hospital.

1010.1.9.7 Delayed egress. Delayed egress locking systems shall be permitted to be installed on doors serving any occupancy except Group A, E and H in buildings that are equipped throughout with an *automatic sprinkler system* in accordance with Section 903.3.1.1 or an *approved automatic smoke* or *heat detection system* installed in accordance with Section 907. The locking system shall be installed and operated in accordance with all of the following:

1. The delay electronics of the delayed egress locking system shall deactivate upon actuation of the *automatic sprinkler system* or *automatic fire detection system*, allowing immediate, free egress.
2. The delay electronics of the delayed egress locking system shall deactivate upon loss of power controlling the lock or lock mechanism, allowing immediate free egress.
3. The delayed egress locking system shall have the capability of being deactivated at the *fire command center* and other *approved* locations.
4. An attempt to egress shall initiate an irreversible process that shall allow such egress in not more than 15 seconds when a physical effort to exit is applied to the egress side door hardware for not more than 3 seconds. Initiation of the irreversible process shall activate an audible signal in the vicinity of the door. Once the delay electronics have been deactivated, rearming the delay electronics shall be by manual means only.

   Exception: Where approved, a delay of not more than 30 seconds is permitted on a delayed egress door.

5. The egress path from any point shall not pass through more than one delayed egress locking system.

   Exception: In Group I-2 or I-3 occupancies, the egress path from any point in the building shall pass through not more than two delayed egress locking systems provided the combined delay does not exceed 30 seconds.

6. A sign shall be provided on the door and shall be located above and within 12 inches (305 mm) of the door exit hardware:

   6.1. For doors that swing in the direction of egress, the sign shall read: PUSH UNTIL ALARM SOUNDS. DOOR CAN BE OPENED IN 15 [30] SECONDS.

   6.2. For doors that swing in the opposite direction of egress, the sign shall read: PULL UNTIL ALARM SOUNDS. DOOR CAN BE OPENED IN 15 [30] SECONDS.

   6.3. The sign shall comply with the visual character requirements in ICC A117.1.

   Exception: Where approved, in Group I occupancies, the installation of a sign is not required where care recipients who because of clinical needs require restraint or containment as part of the function of the treatment area.

7. Emergency lighting shall be provided on the egress side of the door.

8. The delayed egress locking system units shall be listed in accordance with UL 294.

1010.1.9.8 Sensor release of electrically locked egress doors. The electric locks on sensor released doors located in a *means of egress* in buildings with an occupancy in Group A, B, E, I-1, I-2, I-4, M, R-1 or R-2 and entrance doors to tenant spaces in occupancies in Group A, B, E, I-1, I-2, I-4, M, R-1 or R-2 are permitted where installed and operated in accordance with all of the following criteria:

1. The sensor shall be installed on the egress side, arranged to detect an occupant approaching the doors. The doors shall be arranged to unlock by a signal from or loss of power to the sensor.

2. Loss of power to the lock or locking system shall automatically unlock the doors.

3. The doors shall be arranged to unlock from a manual unlocking device located 40 inches to 48 inches (1016 mm to 1219 mm) vertically above the floor and within 5 feet (1524 mm) of the secured doors. Ready access shall be provided to the manual unlocking device and the device shall be clearly identified by a sign that reads "PUSH TO EXIT." When operated, the manual unlocking device shall result in direct interruption of power to the lock—independent of other electronics—and the doors shall remain unlocked for not less than 30 seconds.

4. Activation of the building *fire alarm system*, where provided, shall automatically unlock the doors, and the doors shall remain unlocked until the fire alarm system has been reset.

5. Activation of the building *automatic sprinkler system* or *fire detection system*, where provided, shall automatically unlock the doors. The doors shall remain unlocked until the *fire alarm system* has been reset.

6. The door locking system units shall be listed in accordance with UL 294.

1010.1.9.9 Electromagnetically locked egress doors. Doors in the *means of egress* in buildings with an occupancy in Group A, B, E, I-1, I-2, I-4, M, R-1 or R-2 and doors to tenant spaces in Group A, B, E, I-1, I-2, I-4, M, R-1 or R-2 shall be permitted to be locked with an electromagnetic locking system where equipped with hardware that incorporates a built-in switch and where installed and operated in accordance with all of the following:

1. The hardware that is affixed to the door leaf has an obvious method of operation that is readily operated under all lighting conditions.

2. The hardware is capable of being operated with one hand.

3. Operation of the hardware directly interrupts the power to the electromagnetic lock and unlocks the door immediately.

4. Loss of power to the locking system automatically unlocks the door.

5. Where *panic* or *fire exit hardware* is required by Section 1010.1.10, operation of the *panic* or *fire exit hardware* also releases the electromagnetic lock.

6. The locking system units shall be listed in accordance with UL 294.

1010.1.9.10 Locking arrangements in correctional facilities. In occupancies in Groups A-2, A-3, A-4, B, E, F, I-2, I-3, M and S within correctional and detention facilities, doors in *means of egress* serving rooms or spaces occupied by persons whose movements are controlled for security reasons shall be permitted to be locked where equipped with egress control devices that shall unlock manually and by not less than one of the following means:

1. Activation of an *automatic sprinkler system* installed in accordance with Section 903.3.1.1.

2. Activation of an *approved manual fire alarm box.*

3. A signal from a *constantly attended location.*

1010.1.9.11 Stairway doors. Interior *stairway means of egress* doors shall be openable from both sides without the use of a key or special knowledge or effort.

Exceptions:

1. *Stairway* discharge doors shall be openable from the egress side and shall only be locked from the opposite side.
2. This section shall not apply to doors arranged in accordance with Section 403.5.3.
3. In *stairways* serving not more than four stories, doors are permitted to be locked from the side opposite the egress side, provided they are openable from the egress side and capable of being unlocked simultaneously without unlatching upon a signal from the *fire command center*, if present, or a signal by emergency personnel from a single location inside the main entrance to the building.
4. *Stairway exit* doors shall be openable from the egress side and shall only be locked from the opposite side in Group B, F, M and S occupancies where the only interior access to the tenant space is from a single *exit stairway* where permitted in Section 1006.3.2.
5. *Stairway exit* doors shall be openable from the egress side and shall only be locked from the opposite side in Group R-2 occupancies where the only interior access to the *dwelling unit* is from a single *exit stairway* where permitted in Section 1006.3.2.

1010.1.10 Panic and fire exit hardware. Doors serving a Group H occupancy and doors serving rooms or spaces with an *occupant load* of 50 or more in a Group A or E occupancy shall not be provided with a latch or lock other than *panic hardware* or *fire exit hardware*.

Exceptions:

1. A main *exit* of a Group A occupancy shall be permitted to be locking in accordance with Section 1010.1.9.3, Item 2.
2. Doors serving a Group A or E occupancy shall be permitted to be electromagnetically locked in accordance with Section 1010.1.9.9.

Electrical rooms with equipment rated 1,200 amperes or more and over 6 feet (1829 mm) wide, and that contain overcurrent devices, switching devices or control devices with *exit* or *exit access doors*, shall be equipped with *panic hardware* or *fire exit hardware*. The doors shall swing in the direction of egress travel.

1010.1.10.1 Installation. Where *panic* or *fire exit hardware* is installed, it shall comply with the following:

1. *Panic hardware* shall be *listed* in accordance with UL 305.
2. *Fire exit hardware* shall be *listed* in accordance with UL 10C and UL 305.
3. The actuating portion of the releasing device shall extend not less than one-half of the door leaf width.
4. The maximum unlatching force shall not exceed 15 pounds (67 N).

1010.1.10.2 Balanced doors. If *balanced doors* are used and *panic hardware* is required, the *panic hardware* shall be the push-pad type and the pad shall not extend more than one-half the width of the door measured from the latch side.

1010.2 Gates. Gates serving the *means of egress* system shall comply with the requirements of this section. Gates used as a component in a *means of egress* shall conform to the applicable requirements for doors.

Exception: Horizontal sliding or swinging gates exceeding the 4-foot (1219 mm) maximum leaf width limitation are permitted in fences and walls surrounding a stadium.

1010.2.1 Stadiums. *Panic hardware* is not required on gates surrounding stadiums where such gates are under constant immediate supervision while the public is present, and where safe dispersal areas based on 3 square feet (0.28 m^2) per occupant are located between the fence and enclosed space. Such required safe dispersal areas shall not be located less than 50 feet (15 240 mm) from the enclosed space. See Section 1028.5 for *means of egress* from safe dispersal areas.

1010.3 Turnstiles. Turnstiles or similar devices that restrict travel to one direction shall not be placed so as to obstruct any required *means of egress*.

Exception: Each turnstile or similar device shall be credited with a capacity based on not more than a 50-person *occupant load* where all of the following provisions are met:

1. Each device shall turn free in the direction of egress travel when primary power is lost and on the manual release by an employee in the area.
2. Such devices are not given credit for more than 50 percent of the required egress capacity or width.
3. Each device is not more than 39 inches (991 mm) high.
4. Each device has not less than $16^1/_2$ inches (419 mm) clear width at and below a height of 39 inches (991 mm) and not less than 22 inches (559 mm) clear width at heights above 39 inches (991 mm).

Where located as part of an *accessible route*, turnstiles shall have not less than 36 inches (914 mm) clear at and below a height of 34 inches (864 mm), not less than 32 inches (813 mm) clear width between 34 inches (864 mm) and 80 inches (2032 mm) and shall consist of a mechanism other than a revolving device.

1010.3.1 High turnstile. Turnstiles more than 39 inches (991 mm) high shall meet the requirements for revolving doors.

1010.3.2 Additional door. Where serving an *occupant load* greater than 300, each turnstile that is not portable

shall have a side-hinged swinging door that conforms to Section 1010.1 within 50 feet (15 240 mm).

SECTION 1011
STAIRWAYS

1011.1 General. *Stairways* serving occupied portions of a building shall comply with the requirements of Sections 1011.2 through 1011.13. *Alternating tread devices* shall comply with Section 1011.14. Ships ladders shall comply with Section 1011.15. Ladders shall comply with Section 1011.16.

Exception: Within rooms or spaces used for assembly purposes, stepped aisles shall comply with Section 1029.

1011.2 Width and capacity. The required capacity of *stairways* shall be determined as specified in Section 1005.1, but the minimum width shall be not less than 44 inches (1118 mm). See Section 1009.3 for accessible *means of egress stairways*.

Exceptions:

1. *Stairways* serving an *occupant load* of less than 50 shall have a width of not less than 36 inches (914 mm).
2. *Spiral stairways* as provided for in Section 1011.10.
3. Where an incline platform lift or stairway chairlift is installed on *stairways* serving occupancies in Group R-3, or within *dwelling units* in occupancies in Group R-2, a clear passage width not less than 20 inches (508 mm) shall be provided. Where the seat and platform can be folded when not in use, the distance shall be measured from the folded position.

1011.3 Headroom. *Stairways* shall have a headroom clearance of not less than 80 inches (2032 mm) measured vertically from a line connecting the edge of the *nosings*. Such headroom shall be continuous above the *stairway* to the point where the line intersects the landing below, one tread depth beyond the bottom riser. The minimum clearance shall be maintained the full width of the *stairway* and landing.

Exceptions:

1. *Spiral stairways* complying with Section 1011.10 are permitted a 78-inch (1981 mm) headroom clearance.
2. In Group R-3 occupancies; within *dwelling units* in Group R-2 occupancies; and in Group U occupancies that are accessory to a Group R-3 occupancy or accessory to individual *dwelling units* in Group R-2 occupancies; where the *nosings* of treads at the side of a *flight* extend under the edge of a floor opening through which the *stair* passes, the floor opening shall be allowed to project horizontally into the required headroom not more than $4^3/_4$ inches (121 mm).

1011.4 Walkline. The walkline across *winder* treads shall be concentric to the direction of travel through the turn and located 12 inches (305 mm) from the side where the *winders* are narrower. The 12-inch (305 mm) dimension shall be measured from the widest point of the clear *stair* width at the walking surface of the *winder*. Where *winders* are adjacent within the *flight*, the point of the widest clear *stair* width of the adjacent *winders* shall be used.

1011.5 Stair treads and risers. *Stair* treads and risers shall comply with Sections 1011.5.1 through 1011.5.5.3.

1011.5.1 Dimension reference surfaces. For the purpose of this section, all dimensions are exclusive of carpets, rugs or runners.

1011.5.2 Riser height and tread depth. *Stair* riser heights shall be 7 inches (178 mm) maximum and 4 inches (102 mm) minimum. The riser height shall be measured vertically between the *nosings* of adjacent treads. Rectangular tread depths shall be 11 inches (279 mm) minimum measured horizontally between the vertical planes of the foremost projection of adjacent treads and at a right angle to the tread's *nosing*. *Winder* treads shall have a minimum tread depth of 11 inches (279 mm) between the vertical planes of the foremost projection of adjacent treads at the intersections with the walkline and a minimum tread depth of 10 inches (254 mm) within the clear width of the *stair*.

Exceptions:

1. *Spiral stairways* in accordance with Section 1011.10.
2. *Stairways* connecting stepped *aisles* to cross *aisles* or concourses shall be permitted to use the riser/tread dimension in Section 1029.13.2.
3. In Group R-3 occupancies; within *dwelling units* in Group R-2 occupancies; and in Group U occupancies that are accessory to a Group R-3 occupancy or accessory to individual *dwelling units* in Group R-2 occupancies; the maximum riser height shall be $7^3/_4$ inches (197 mm); the minimum tread depth shall be 10 inches (254 mm); the minimum *winder* tread depth at the walkline shall be 10 inches (254 mm); and the minimum *winder* tread depth shall be 6 inches (152 mm). A *nosing* projection not less than $^3/_4$ inch (19.1 mm) but not more than $1^1/_4$ inches (32 mm) shall be provided on *stairways* with solid risers where the tread depth is less than 11 inches (279 mm).
4. See Section 403.1 of the *International Existing Building Code* for the replacement of existing *stairways*.
5. In Group I-3 facilities, *stairways* providing access to guard towers, observation stations and control rooms, not more than 250 square feet (23 m^2) in area, shall be permitted to have a maximum riser height of 8 inches (203 mm) and a minimum tread depth of 9 inches (229 mm).

1011.5.3 Winder treads. *Winder* treads are not permitted in *means of egress stairways* except within a *dwelling unit*.

Exceptions:

1. Curved *stairways* in accordance with Section 1011.9.
2. *Spiral stairways* in accordance with Section 1011.10.

1011.5.4 Dimensional uniformity. *Stair* treads and risers shall be of uniform size and shape. The tolerance between the largest and smallest riser height or between the largest and smallest tread depth shall not exceed $^3/_8$ inch (9.5 mm) in any *flight* of *stairs*. The greatest *winder* tread depth at the walkline within any *flight* of *stairs* shall not exceed the smallest by more than $^3/_8$ inch (9.5 mm).

Exceptions:

1. *Stairways* connecting stepped *aisles* to cross *aisles* or concourses shall be permitted to comply with the dimensional nonuniformity in Section 1029.13.2.
2. Consistently shaped *winders*, complying with Section 1011.5, differing from rectangular treads in the same *flight* of *stairs*.
3. Nonuniform riser dimension complying with Section 1011.5.4.1.

1011.5.4.1 Nonuniform height risers. Where the bottom or top riser adjoins a sloping *public way*, walkway or driveway having an established grade and serving as a landing, the bottom or top riser is permitted to be reduced along the slope to less than 4 inches (102 mm) in height, with the variation in height of the bottom or top riser not to exceed one unit vertical in 12 units horizontal (8-percent slope) of *stair* width. The *nosings* or leading edges of treads at such nonuniform height risers shall have a distinctive marking stripe, different from any other *nosing* marking provided on the *stair flight*. The distinctive marking stripe shall be visible in descent of the *stair* and shall have a slip-resistant surface. Marking stripes shall have a width of not less than 1 inch (25 mm) but not more than 2 inches (51 mm).

1011.5.5 Nosing and riser profile. *Nosings* shall have a curvature or bevel of not less than $^1/_{16}$ inch (1.6 mm) but not more than $^9/_{16}$ inch (14.3 mm) from the foremost projection of the tread. Risers shall be solid and vertical or sloped under the tread above from the underside of the *nosing* above at an angle not more than 30 degrees (0.52 rad) from the vertical.

1011.5.5.1 Nosing projection size. The leading edge (*nosings*) of treads shall project not more than $1^1/_4$ inches (32 mm) beyond the tread below.

1011.5.5.2 Nosing projection uniformity. *Nosing* projections of the leading edges shall be of uniform size, including the projections of the *nosing's* leading edge of the floor at the top of a *flight*.

1011.5.5.3 Solid risers. Risers shall be solid.

Exceptions:

1. Solid risers are not required for *stairways* that are not required to comply with Section 1009.3, provided that the opening between treads does not permit the passage of a sphere with a diameter of 4 inches (102 mm).
2. Solid risers are not required for occupancies in Group I-3 or in Group F, H and S occupancies other than areas accessible to the public. There are no restrictions on the size of the opening in the riser.
3. Solid risers are not required for *spiral stairways* constructed in accordance with Section 1011.10.

1011.6 Stairway landings. There shall be a floor or landing at the top and bottom of each *stairway*. The width of landings shall be not less than the width of *stairways* served. Every landing shall have a minimum width measured perpendicular to the direction of travel equal to the width of the *stairway*. Where the *stairway* has a straight run the depth need not exceed 48 inches (1219 mm). Doors opening onto a landing shall not reduce the landing to less than one-half the required width. When fully open, the door shall not project more than 7 inches (178 mm) into a landing. Where *wheelchair spaces* are required on the *stairway* landing in accordance with Section 1009.6.3, the *wheelchair space* shall not be located in the required width of the landing and doors shall not swing over the *wheelchair spaces*.

Exception: Where *stairways* connect stepped *aisles* to cross *aisles* or concourses, *stairway* landings are not required at the transition between *stairways* and stepped *aisles* constructed in accordance with Section 1029.

1011.7 Stairway construction. *Stairways* shall be built of materials consistent with the types permitted for the type of construction of the building, except that wood *handrails* shall be permitted for all types of construction.

1011.7.1 Stairway walking surface. The walking surface of treads and landings of a *stairway* shall not be sloped steeper than one unit vertical in 48 units horizontal (2-percent slope) in any direction. *Stairway* treads and landings shall have a solid surface. Finish floor surfaces shall be securely attached.

Exceptions:

1. Openings in *stair* walking surfaces shall be a size that does not permit the passage of $^1/_2$-inch-diameter (12.7 mm) sphere. Elongated openings shall be placed so that the long dimension is perpendicular to the direction of travel.
2. In Group F, H and S occupancies, other than areas of parking structures accessible to the public, openings in treads and landings shall not be prohibited provided a sphere with a diameter of $1^1/_8$ inches (29 mm) cannot pass through the opening.

1011.7.2 Outdoor conditions. Outdoor *stairways* and outdoor approaches to *stairways* shall be designed so that water will not accumulate on walking surfaces.

1011.7.3 Enclosures under interior stairways. The walls and soffits within enclosed usable spaces under enclosed and unenclosed stairways shall be protected by 1-hour

fire-resistance-rated construction or the fire-resistance rating of the stairway enclosure, whichever is greater. Access to the enclosed space shall not be directly from within the stairway enclosure.

Exception: Spaces under *stairways* serving and contained within a single residential dwelling unit in Group R-2 or R-3 shall be permitted to be protected on the enclosed side with $^1/_2$-inch (12.7 mm) gypsum board.

1011.7.4 Enclosures under exterior stairways. There shall not be enclosed usable space under *exterior exit stairways* unless the space is completely enclosed in 1-hour fire-resistance-rated construction. The open space under *exterior stairways* shall not be used for any purpose.

1011.8 Vertical rise. A flight of stairs shall not have a vertical rise greater than 12 feet (3658 mm) between floor levels or landings.

Exception: Spiral stairways used as a means of egress from technical production areas.

1011.9 Curved stairways. Curved stairways with winder treads shall have treads and risers in accordance with Section 1011.5 and the smallest radius shall be not less than twice the minimum width or required capacity of the stairway.

Exception: The radius restriction shall not apply to curved stairways in Group R-3 and within individual dwelling units in Group R-2.

1011.10 Spiral stairways. *Spiral stairways* are permitted to be used as a component in the *means of egress* only within *dwelling units* or from a space not more than 250 square feet (23 m^2) in area and serving not more than five occupants, or from *technical production areas* in accordance with Section 410.6.

A *spiral stairway* shall have a $7^1/_2$-inch (191 mm) minimum clear tread depth at a point 12 inches (305 mm) from the narrow edge. The risers shall be sufficient to provide a headroom of 78 inches (1981 mm) minimum, but riser height shall not be more than $9^1/_2$ inches (241 mm). The minimum *stairway* clear width at and below the *handrail* shall be 26 inches (660 mm).

1011.11 Handrails. *Stairways* shall have *handrails* on each side and shall comply with Section 1014. Where glass is used to provide the *handrail*, the *handrail* shall comply with Section 2407.

Exceptions:

1. *Stairways* within dwelling units and *spiral stairways* are permitted to have a *handrail* on one side only.
2. Decks, patios and walkways that have a single change in elevation where the landing depth on each side of the change of elevation is greater than what is required for a landing do not require *handrails*.
3. In Group R-3 occupancies, a change in elevation consisting of a single riser at an entrance or egress door does not require *handrails*.
4. Changes in room elevations of three or fewer risers within dwelling units and sleeping units in Group R-2 and R-3 do not require *handrails*.

1011.12 Stairway to roof. In buildings four or more stories above *grade plane*, one *stairway* shall extend to the roof surface unless the roof has a slope steeper than four units vertical in 12 units horizontal (33-percent slope).

Exception: Other than where required by Section 1011.12.1, in buildings without an occupied roof access to the roof from the top story shall be permitted to be by an *alternating tread device*, a ships ladder or a permanent ladder.

1011.12.1 Stairway to elevator equipment. Roofs and penthouses containing elevator equipment that must be accessed for maintenance are required to be accessed by a stairway.

1011.12.2 Roof access. Where a stairway is provided to a roof, access to the roof shall be provided through a penthouse complying with Section 1510.2.

Exception: In buildings without an occupied roof, access to the roof shall be permitted to be a roof hatch or trap door not less than 16 square feet (1.5 m^2) in area and having a minimum dimension of 2 feet (610 mm).

1011.13 Guards. Guards shall be provided along stairways and landings where required by Section 1015 and shall be constructed in accordance with Section 1015. Where the roof hatch opening providing the required access is located within 10 feet (3049 mm) of the roof edge, such roof access or roof edge shall be protected by guards installed in accordance with Section 1015.

1011.14 Alternating tread devices. *Alternating tread devices* are limited to an element of a *means of egress* in buildings of Groups F, H and S from a mezzanine not more than 250 square feet (23 m^2) in area and that serves not more than five occupants; in buildings of Group I-3 from a guard tower, observation station or control room not more than 250 square feet (23 m^2) in area and for access to unoccupied roofs. *Alternating tread devices* used as a means of egress shall not have a rise greater than 20 feet (6096 mm) between floor levels or landings.

1011.14.1 Handrails of alternating tread devices. Handrails shall be provided on both sides of alternating tread devices and shall comply with Section 1021.

1011.14.2 Treads of alternating tread devices. *Alternating tread devices* shall have a minimum tread depth of 5 inches (127 mm), a minimum projected tread depth of $8^1/_2$ inches (216 mm), a minimum tread width of 7 inches (178 mm) and a maximum riser height of $9^1/_2$ inches (241 mm). The tread depth shall be measured horizontally between the vertical planes of the foremost projections of adjacent treads. The riser height shall be measured vertically between the leading edges of adjacent treads. The riser height and tread depth provided shall result in an angle of ascent from the horizontal of between 50 and 70 degrees (0.87 and 1.22 rad). The initial tread of the device shall begin at the same elevation as the platform, landing or floor surface.

Exception: *Alternating tread devices* used as an element of a *means of egress* in buildings from a mezzanine area not more than 250 square feet (23 m^2) in area

that serves not more than five occupants shall have a minimum tread depth of 3 inches (76 mm) with a minimum projected tread depth of $10^1/_2$ inches (267 mm). The rise to the next alternating tread surface shall not exceed 8 inches (203 mm).

1011.15 Ships ladders. Ships ladders are permitted to be used in Group I-3 as a component of a *means of egress* to and from control rooms or elevated facility observation stations not more than 250 square feet (23 m^2) with not more than three occupants and for access to unoccupied roofs. The minimum clear width at and below the *handrails* shall be 20 inches (508 mm).

1011.15.1 Handrails of ships ladders. *Handrails* shall be provided on both sides of ships ladders.

1011.15.2 Treads of ships ladders. Ships ladders shall have a minimum tread depth of 5 inches (127 mm). The tread shall be projected such that the total of the tread depth plus the *nosing* projection is not less than $8^1/_2$ inches (216 mm). The maximum riser height shall be $9^1/_2$ inches (241 mm).

1011.16 Ladders. Permanent ladders shall not serve as a part of the *means of egress* from occupied spaces within a building. Permanent ladders shall be permitted to provide access to the following areas:

1. Spaces frequented only by personnel for maintenance, repair or monitoring of equipment.
2. Nonoccupiable spaces accessed only by catwalks, crawl spaces, freight elevators or very narrow passageways.
3. Raised areas used primarily for purposes of security, life safety or fire safety including, but not limited to, observation galleries, prison guard towers, fire towers or lifeguard stands.
4. Elevated levels in Group U not open to the general public.
5. Nonoccupied roofs that are not required to have *stairway* access in accordance with Section 1011.12.1.
6. Ladders shall be constructed in accordance with Section 306.5 of the *International Mechanical Code*.

SECTION 1012
RAMPS

1012.1 Scope. The provisions of this section shall apply to ramps used as a component of a *means of egress*.

Exceptions:

1. Ramped *aisles* within assembly rooms or spaces shall comply with the provisions in Section 1029.
2. Curb ramps shall comply with ICC A117.1.
3. Vehicle ramps in parking garages for pedestrian *exit access* shall not be required to comply with Sections 1012.3 through 1012.10 where they are not an *accessible route* serving *accessible* parking spaces, other required *accessible* elements or part of an accessible *means of egress*.

1012.2 Slope. *Ramps* used as part of a *means of egress* shall have a running slope not steeper than one unit vertical in 12 units horizontal (8-percent slope). The slope of other pedestrian *ramps* shall not be steeper than one unit vertical in eight units horizontal (12.5-percent slope).

1012.3 Cross slope. The slope measured perpendicular to the direction of travel of a *ramp* shall not be steeper than one unit vertical in 48 units horizontal (2-percent slope).

1012.4 Vertical rise. The rise for any *ramp* run shall be 30 inches (762 mm) maximum.

1012.5 Minimum dimensions. The minimum dimensions of *means of egress ramps* shall comply with Sections 1012.5.1 through 1012.5.3.

1012.5.1 Width and capacity. The minimum width and required capacity of a *means of egress ramp* shall be not less than that required for *corridors* by Section 1020.2. The clear width of a *ramp* between *handrails*, if provided, or other permissible projections shall be 36 inches (914 mm) minimum.

1012.5.2 Headroom. The minimum headroom in all parts of the *means of egress ramp* shall be not less than 80 inches (2032 mm).

1012.5.3 Restrictions. *Means of egress ramps* shall not reduce in width in the direction of egress travel. Projections into the required *ramp* and landing width are prohibited. Doors opening onto a landing shall not reduce the clear width to less than 42 inches (1067 mm).

1012.6 Landings. *Ramps* shall have landings at the bottom and top of each *ramp*, points of turning, entrance, exits and at doors. Landings shall comply with Sections 1012.6.1 through 1012.6.5.

1012.6.1 Slope. Landings shall have a slope not steeper than one unit vertical in 48 units horizontal (2-percent slope) in any direction. Changes in level are not permitted.

1012.6.2 Width. The landing width shall be not less than the width of the widest *ramp* run adjoining the landing.

1012.6.3 Length. The landing length shall be 60 inches (1525 mm) minimum.

Exceptions:

1. In Group R-2 and R-3 individual *dwelling* and *sleeping units* that are not required to be *Accessible units*, *Type A units* or *Type B units* in accordance with Section 1107, landings are permitted to be 36 inches (914 mm) minimum.
2. Where the *ramp* is not a part of an *accessible route*, the length of the landing shall not be required to be more than 48 inches (1220 mm) in the direction of travel.

1012.6.4 Change in direction. Where changes in direction of travel occur at landings provided between *ramp* runs, the landing shall be 60 inches by 60 inches (1524 mm by 1524 mm) minimum.

Exception: In Group R-2 and R-3 individual *dwelling* or *sleeping units* that are not required to be *Accessible*

units, *Type A units* or *Type B units* in accordance with Section 1107, landings are permitted to be 36 inches by 36 inches (914 mm by 914 mm) minimum.

1012.6.5 Doorways. Where doorways are located adjacent to a *ramp* landing, maneuvering clearances required by *ICC A117.1* are permitted to overlap the required landing area.

1012.7 Ramp construction. *Ramps* shall be built of materials consistent with the types permitted for the type of construction of the building, except that wood *handrails* shall be permitted for all types of construction.

1012.7.1 Ramp surface. The surface of *ramps* shall be of slip-resistant materials that are securely attached.

1012.7.2 Outdoor conditions. Outdoor *ramps* and outdoor approaches to *ramps* shall be designed so that water will not accumulate on walking surfaces.

1012.8 Handrails. *Ramps* with a rise greater than 6 inches (152 mm) shall have *handrails* on both sides. *Handrails* shall comply with Section 1014.

1012.9 Guards. *Guards* shall be provided where required by Section 1015 and shall be constructed in accordance with Section 1015.

1012.10 Edge protection. Edge protection complying with Section 1012.10.1 or 1012.10.2 shall be provided on each side of *ramp* runs and at each side of *ramp* landings.

Exceptions:

1. Edge protection is not required on *ramps* that are not required to have *handrails*, provided they have flared sides that comply with the *ICC A117.1* curb ramp provisions.
2. Edge protection is not required on the sides of *ramp* landings serving an adjoining *ramp* run or *stairway*.
3. Edge protection is not required on the sides of *ramp* landings having a vertical dropoff of not more than $^1/_2$ inch (12.7 mm) within 10 inches (254 mm) horizontally of the required landing area.

1012.10.1 Curb, rail, wall or barrier. A curb, rail, wall or barrier shall be provided to serve as edge protection. A curb shall be not less than 4 inches (102 mm) in height. Barriers shall be constructed so that the barrier prevents the passage of a 4-inch-diameter (102 mm) sphere, where any portion of the sphere is within 4 inches (102 mm) of the floor or ground surface.

1012.10.2 Extended floor or ground surface. The floor or ground surface of the *ramp* run or landing shall extend 12 inches (305 mm) minimum beyond the inside face of a *handrail* complying with Section 1014.

SECTION 1013
EXIT SIGNS

1013.1 Where required. *Exits* and *exit access* doors shall be marked by an *approved* exit sign readily visible from any direction of egress travel. The path of egress travel to *exits* and within *exits* shall be marked by readily visible exit signs to clearly indicate the direction of egress travel in cases where the *exit* or the path of egress travel is not immediately visible to the occupants. Intervening *means of egress* doors within *exits* shall be marked by exit signs. Exit sign placement shall be such that no point in an *exit access corridor* or *exit passageway* is more than 100 feet (30 480 mm) or the *listed* viewing distance for the sign, whichever is less, from the nearest visible exit sign.

Exceptions:

1. Exit signs are not required in rooms or areas that require only one *exit* or *exit access*.
2. Main exterior *exit* doors or gates that are obviously and clearly identifiable as *exits* need not have exit signs where *approved* by the *building official*.
3. Exit signs are not required in occupancies in Group U and individual *sleeping units* or *dwelling units* in Group R-1, R-2 or R-3.
4. Exit signs are not required in dayrooms, sleeping rooms or dormitories in occupancies in Group I-3.
5. In occupancies in Groups A-4 and A-5, exit signs are not required on the seating side of vomitories or openings into seating areas where exit signs are provided in the concourse that are readily apparent from the vomitories. Egress lighting is provided to identify each vomitory or opening within the seating area in an emergency.

1013.2 Floor-level exit signs in Group R-1. Where exit signs are required in Group R-1 occupancies by Section 1013.1, additional low-level exit signs shall be provided in all areas serving guest rooms in Group R-1 occupancies and shall comply with Section 1013.5.

The bottom of the sign shall be not less than 10 inches (254 mm) nor more than 12 inches (305 mm) above the floor level. The sign shall be flush mounted to the door or wall. Where mounted on the wall, the edge of the sign shall be within 4 inches (102 mm) of the door frame on the latch side.

1013.3 Illumination. Exit signs shall be internally or externally illuminated.

Exception: Tactile signs required by Section 1013.4 need not be provided with illumination.

1013.4 Raised character and braille exit signs. A sign stating EXIT in visual characters, raised characters and braille and complying with *ICC A117.1* shall be provided adjacent to each door to an *area of refuge*, an exterior area for assisted rescue, an *exit stairway* or *ramp*, an *exit passageway* and the *exit discharge*.

1013.5 Internally illuminated exit signs. Electrically powered, *self-luminous* and *photoluminescent* exit signs shall be *listed* and *labeled* in accordance with UL 924 and shall be installed in accordance with the manufacturer's instructions and Chapter 27. Exit signs shall be illuminated at all times.

1013.6 Externally illuminated exit signs. Externally illuminated exit signs shall comply with Sections 1013.6.1 through 1013.6.3.

1013.6.1 Graphics. Every exit sign and directional exit sign shall have plainly legible letters not less than 6 inches (152 mm) high with the principal strokes of the letters not less than $^3/_4$ inch (19.1 mm) wide. The word "EXIT" shall have letters having a width not less than 2 inches (51 mm) wide, except the letter "I," and the minimum spacing between letters shall be not less than $^3/_8$ inch (9.5 mm). Signs larger than the minimum established in this section shall have letter widths, strokes and spacing in proportion to their height.

The word "EXIT" shall be in high contrast with the background and shall be clearly discernible when the means of exit sign illumination is or is not energized. If a chevron directional indicator is provided as part of the exit sign, the construction shall be such that the direction of the chevron directional indicator cannot be readily changed.

1013.6.2 Exit sign illumination. The face of an exit sign illuminated from an external source shall have an intensity of not less than 5 footcandles (54 lux).

1013.6.3 Power source. Exit signs shall be illuminated at all times. To ensure continued illumination for a duration of not less than 90 minutes in case of primary power loss, the sign illumination means shall be connected to an emergency power system provided from storage batteries, unit equipment or an on-site generator. The installation of the emergency power system shall be in accordance with Chapter 27.

Exceptions:

1. *Approved* exit sign illumination means that provide continuous illumination independent of external power sources for a duration of not less than 90 minutes, in case of primary power loss, are not required to be connected to an emergency electrical system.
2. Group I-2 Condition 2 exit sign illumination shall not be provided by unit equipment battery only.

SECTION 1014
HANDRAILS

1014.1 Where required. *Handrails* serving *stairways*, *ramps*, stepped *aisles* and ramped *aisles* shall be adequate in strength and attachment in accordance with Section 1607.8. *Handrails* required for *stairways* by Section 1011.11 shall comply with Sections 1014.2 through 1014.9. *Handrails* required for *ramps* by Section 1012.8 shall comply with Sections 1014.2 through 1014.8. *Handrails* for stepped *aisles* and ramped *aisles* required by Section 1029.15 shall comply with Sections 1014.2 through 1014.8.

1014.2 Height. *Handrail* height, measured above *stair* tread *nosings*, or finish surface of *ramp* slope, shall be uniform, not less than 34 inches (864 mm) and not more than 38 inches (965 mm). *Handrail* height of *alternating tread devices* and ships ladders, measured above tread *nosings*, shall be uniform, not less than 30 inches (762 mm) and not more than 34 inches (864 mm).

Exceptions:

1. Where handrail fittings or bendings are used to provide continuous transition between *flights*, the fittings or bendings shall be permitted to exceed the maximum height.
2. In Group R-3 occupancies; within *dwelling units* in Group R-2 occupancies; and in Group U occupancies that are associated with a Group R-3 occupancy or associated with individual *dwelling units* in Group R-2 occupancies; where handrail fittings or bendings are used to provide continuous transition between *flights*, transition at *winder* treads, transition from *handrail* to *guard*, or where used at the start of a *flight*, the *handrail* height at the fittings or bendings shall be permitted to exceed the maximum height.
3. *Handrails* on top of a guard where permitted along stepped aisles and ramped aisles in accordance with Section 1029.15.

1014.3 Handrail graspability. Required *handrails* shall comply with Section 1014.3.1 or shall provide equivalent graspability.

Exception: In Group R-3 occupancies; within *dwelling units* in Group R-2 occupancies; and in Group U occupancies that are accessory to a Group R-3 occupancy or accessory to individual *dwelling units* in Group R-2 occupancies; *handrails* shall be Type I in accordance with Section 1014.3.1, Type II in accordance with Section 1014.3.2 or shall provide equivalent graspability.

1014.3.1 Type I. *Handrails* with a circular cross section shall have an outside diameter of not less than $1^1/_4$ inches (32 mm) and not greater than 2 inches (51 mm). Where the *handrail* is not circular, it shall have a perimeter dimension of not less than 4 inches (102 mm) and not greater than $6^1/_4$ inches (160 mm) with a maximum cross-sectional dimension of $2^1/_4$ inches (57 mm) and minimum cross-sectional dimension of 1 inch (25 mm). Edges shall have a minimum radius of 0.01 inch (0.25 mm).

1014.3.2 Type II. *Handrails* with a perimeter greater than $6^1/_4$ inches (160 mm) shall provide a graspable finger recess area on both sides of the profile. The finger recess shall begin within a distance of $^3/_4$ inch (19 mm) measured vertically from the tallest portion of the profile and achieve a depth of not less than $^5/_{16}$ inch (8 mm) within $^7/_8$ inch (22 mm) below the widest portion of the profile. This required depth shall continue for not less than $^3/_8$ inch (10 mm) to a level that is not less than $1^3/_4$ inches (45 mm) below the tallest portion of the profile. The width of the *handrail* above the recess shall be not less than $1^1/_4$ inches (32 mm) to not greater than $2^3/_4$ inches (70 mm). Edges shall have a minimum radius of 0.01 inch (0.25 mm).

1014.4 Continuity. Handrail gripping surfaces shall be continuous, without interruption by newel posts or other obstructions.

Exceptions:

1. *Handrails* within *dwelling units* are permitted to be interrupted by a newel post at a turn or landing.
2. Within a *dwelling unit*, the use of a volute, turnout, starting easing or starting newel is allowed over the lowest tread.
3. Handrail brackets or balusters attached to the bottom surface of the *handrail* that do not project horizontally beyond the sides of the *handrail* within $1^1/_2$ inches (38 mm) of the bottom of the *handrail* shall not be considered obstructions. For each $^1/_2$ inch (12.7 mm) of additional handrail perimeter dimension above 4 inches (102 mm), the vertical clearance dimension of $1^1/_2$ inches (38 mm) shall be permitted to be reduced by $^1/_8$ inch (3.2 mm).
4. Where *handrails* are provided along walking surfaces with slopes not steeper than 1:20, the bottoms of the handrail gripping surfaces shall be permitted to be obstructed along their entire length where they are integral to crash rails or bumper guards.
5. *Handrails* serving stepped *aisles* or ramped *aisles* are permitted to be discontinuous in accordance with Section 1029.15.1.

1014.5 Fittings. *Handrails* shall not rotate within their fittings.

1014.6 Handrail extensions. *Handrails* shall return to a wall, *guard* or the walking surface or shall be continuous to the handrail of an adjacent *flight* of *stairs* or *ramp* run. Where *handrails* are not continuous between *flights*, the *handrails* shall extend horizontally not less than 12 inches (305 mm) beyond the top riser and continue to slope for the depth of one tread beyond the bottom riser. At *ramps* where *handrails* are not continuous between runs, the *handrails* shall extend horizontally above the landing 12 inches (305 mm) minimum beyond the top and bottom of *ramp* runs. The extensions of *handrails* shall be in the same direction of the *flights* of *stairs* at *stairways* and the *ramp* runs at *ramps*.

Exceptions:

1. *Handrails* within a *dwelling unit* that is not required to be *accessible* need extend only from the top riser to the bottom riser.
2. *Handrails* serving aisles in rooms or spaces used for assembly purposes are permitted to comply with the handrail extensions in accordance with Section 1029.15.
3. *Handrails* for *alternating tread devices* and ships ladders are permitted to terminate at a location vertically above the top and bottom risers. *Handrails* for *alternating tread devices* are not required to be continuous between *flights* or to extend beyond the top or bottom risers.

1014.7 Clearance. Clear space between a handrail and a wall or other surface shall be not less than $1^1/_2$ inches (38 mm). A handrail and a wall or other surface adjacent to the *handrail* shall be free of any sharp or abrasive elements.

1014.8 Projections. On *ramps* and on ramped *aisles* that are part of an *accessible route*, the clear width between *handrails* shall be 36 inches (914 mm) minimum. Projections into the required width of *aisles*, *stairways* and *ramps* at each side shall not exceed $4^1/_2$ inches (114 mm) at or below the handrail height. Projections into the required width shall not be limited above the minimum headroom height required in Section 1011.3. Projections due to intermediate *handrails* shall not constitute a reduction in the egress width. Where a pair of intermediate *handrails* are provided within the *stairway* width without a walking surface between the pair of intermediate *handrails* and the distance between the pair of intermediate *handrails* is greater than 6 inches (152 mm), the available egress width shall be reduced by the distance between the closest edges of each such intermediate pair of *handrails* that is greater than 6 inches (152 mm).

1014.9 Intermediate handrails. *Stairways* shall have intermediate *handrails* located in such a manner that all portions of the *stairway* minimum width or required capacity are within 30 inches (762 mm) of a handrail. On monumental *stairs*, *handrails* shall be located along the most direct path of egress travel.

SECTION 1015
GUARDS

1015.1 General. *Guards* shall comply with the provisions of Sections 1015.2 through 1015.6. Operable windows with sills located more than 72 inches (1829 mm) above finished grade or other surface below shall comply with Section 1015.7.

1015.2 Where required. *Guards* shall be located along open-sided walking surfaces, including *mezzanines*, *equipment platforms*, *aisles*, *stairs*, *ramps* and landings that are located more than 30 inches (762 mm) measured vertically to the floor or grade below at any point within 36 inches (914 mm) horizontally to the edge of the open side. *Guards* shall be adequate in strength and attachment in accordance with Section 1607.8.

Exception: *Guards* are not required for the following locations:

1. On the loading side of loading docks or piers.
2. On the audience side of *stages* and raised *platforms*, including *stairs* leading up to the *stage* and raised *platforms*.
3. On raised *stage* and *platform* floor areas, such as runways, *ramps* and side *stages* used for entertainment or presentations.
4. At vertical openings in the performance area of *stages* and *platforms*.
5. At elevated walking surfaces appurtenant to *stages* and *platforms* for access to and utilization of special lighting or equipment.
6. Along vehicle service pits not accessible to the public.

7. In assembly seating areas at cross aisles in accordance with Section 1029.16.2.

1015.2.1 Glazing. Where glass is used to provide a *guard* or as a portion of the *guard* system, the *guard* shall comply with Section 2407. Where the glazing provided does not meet the strength and attachment requirements of Section 1607.8, complying *guards* shall be located along glazed sides of open-sided walking surfaces.

1015.3 Height. Required *guards* shall be not less than 42 inches (1067 mm) high, measured vertically as follows:

1. From the adjacent walking surfaces.
2. On *stairways* and stepped *aisles*, from the line connecting the leading edges of the tread *nosings*.
3. On *ramps* and ramped *aisles*, from the *ramp* surface at the *guard*.

Exceptions:

1. For occupancies in Group R-3 not more than three stories above grade in height and within individual *dwelling units* in occupancies in Group R-2 not more than three stories above grade in height with separate *means of egress*, required *guards* shall be not less than 36 inches (914 mm) in height measured vertically above the adjacent walking surfaces or adjacent *fixed seating*.
2. For occupancies in Group R-3, and within individual *dwelling units* in occupancies in Group R-2, *guards* on the open sides of *stairs* shall have a height not less than 34 inches (864 mm) measured vertically from a line connecting the leading edges of the treads.
3. For occupancies in Group R-3, and within individual *dwelling units* in occupancies in Group R-2, where the top of the *guard* also serves as a *handrail* on the open sides of *stairs*, the top of the *guard* shall be not less than 34 inches (864 mm) and not more than 38 inches (965 mm) measured vertically from a line connecting the leading edges of the treads.
4. The *guard* height in assembly seating areas shall comply with Section 1029.16 as applicable.
5. Along *alternating tread devices* and ships ladders, *guards* where the top rail also serves as a *handrail* shall have height not less than 30 inches (762 mm) and not more than 34 inches (864 mm), measured vertically from the leading edge of the device tread *nosing*.

1015.4 Opening limitations. Required *guards* shall not have openings that allow passage of a sphere 4 inches (102 mm) in diameter from the walking surface to the required *guard* height.

Exceptions:

1. From a height of 36 inches (914 mm) to 42 inches (1067 mm), *guards* shall not have openings that allow passage of a sphere $4^3/_8$ inches (111 mm) in diameter.
2. The triangular openings at the open sides of a *stair*, formed by the riser, tread and bottom rail shall not allow passage of a sphere 6 inches (152 mm) in diameter.
3. At elevated walking surfaces for access to and use of electrical, mechanical or plumbing systems or equipment, *guards* shall not have openings that allow passage of a sphere 21 inches (533 mm) in diameter.
4. In areas that are not open to the public within occupancies in Group I-3, F, H or S, and for *alternating tread devices* and ships ladders, *guards* shall not have openings that allow passage of a sphere 21 inches (533 mm) in diameter.
5. In assembly seating areas, *guards* required at the end of aisles in accordance with Section 1029.16.4 shall not have openings that allow passage of a sphere 4 inches (102 mm) in diameter up to a height of 26 inches (660 mm). From a height of 26 inches (660 mm) to 42 inches (1067 mm) above the adjacent walking surfaces, *guards* shall not have openings that allow passage of a sphere 8 inches (203 mm) in diameter.
6. Within individual *dwelling units* and *sleeping units* in Group R-2 and R-3 occupancies, *guards* on the open sides of *stairs* shall not have openings that allow passage of a sphere $4^3/_8$ (111 mm) inches in diameter.

1015.5 Screen porches. Porches and decks that are enclosed with insect screening shall be provided with *guards* where the walking surface is located more than 30 inches (762 mm) above the floor or grade below.

1015.6 Mechanical equipment, systems and devices. *Guards* shall be provided where various components that require service are located within 10 feet (3048 mm) of a roof edge or open side of a walking surface and such edge or open side is located more than 30 inches (762 mm) above the floor, roof or grade below. The *guard* shall extend not less than 30 inches (762 mm) beyond each end of such components. The *guard* shall be constructed so as to prevent the passage of a sphere 21 inches (533 mm) in diameter.

Exception: *Guards* are not required where permanent fall arrest/restraint anchorage connector devices that comply with ANSI/ASSE Z 359.1 are affixed for use during the entire roof covering lifetime. The devices shall be reevaluated for possible replacement when the entire roof covering is replaced. The devices shall be placed not more than 10 feet (3048 mm) on center along hip and ridge lines and placed not less than 10 feet (3048 mm) from the roof edge or open side of the walking surface.

1015.7 Roof access. *Guards* shall be provided where the roof hatch opening is located within 10 feet (3048 mm) of a roof edge or open side of a walking surface and such edge or open side is located more than 30 inches (762 mm) above the floor, roof or grade below. The *guard* shall be constructed so as to

prevent the passage of a sphere 21 inches (533 mm) in diameter.

Exception: *Guards* are not required where permanent fall arrest/restraint anchorage connector devices that comply with ANSI/ASSE Z 359.1 are affixed for use during the entire roof covering lifetime. The devices shall be reevaluated for possible replacement when the entire roof covering is replaced. The devices shall be placed not more than 10 feet (3048 mm) on center along hip and ridge lines and placed not less than 10 feet (3048 mm) from the roof edge or open side of the walking surface.

1015.8 Window openings. Windows in Group R-2 and R-3 buildings including *dwelling units*, where the top of the sill of an operable window opening is located less than 36 inches above the finished floor and more than 72 inches (1829 mm) above the finished grade or other surface below on the exterior of the building, shall comply with one of the following:

1. Operable windows where the top of the sill of the opening is located more than 75 feet (22 860 mm) above the finished grade or other surface below and that are provided with window fall prevention devices that comply with ASTM F 2006.
2. Operable windows where the openings will not allow a 4-inch-diameter (102 mm) sphere to pass through the opening when the window is in its largest opened position.
3. Operable windows where the openings are provided with window fall prevention devices that comply with ASTM F 2090.
4. Operable windows that are provided with window opening control devices that comply with Section 1015.8.1.

1015.8.1 Window opening control devices. Window opening control devices shall comply with ASTM F 2090. The window opening control device, after operation to release the control device allowing the window to fully open, shall not reduce the minimum net clear opening area of the window unit to less than the area required by Section 1030.2.

SECTION 1016
EXIT ACCESS

1016.1 General. The *exit access* shall comply with the applicable provisions of Sections 1003 through 1015. *Exit access* arrangement shall comply with Sections 1016 through 1021.

1016.2 Egress through intervening spaces. Egress through intervening spaces shall comply with this section.

1. *Exit access* through an enclosed elevator lobby is permitted. Access to not less than one of the required *exits* shall be provided without travel through the enclosed elevator lobbies required by Section 3006. Where the path of exit access travel passes through an enclosed elevator lobby, the level of protection required for the enclosed elevator lobby is not required to be extended to the *exit* unless direct access to an *exit* is required by other sections of this code.
2. Egress from a room or space shall not pass through adjoining or intervening rooms or areas, except where such adjoining rooms or areas and the area served are accessory to one or the other, are not a Group H occupancy and provide a discernible path of egress travel to an *exit*.

   Exception: *Means of egress* are not prohibited through adjoining or intervening rooms or spaces in a Group H, S or F occupancy where the adjoining or intervening rooms or spaces are the same or a lesser hazard occupancy group.
3. An *exit access* shall not pass through a room that can be locked to prevent egress.
4. *Means of egress* from *dwelling units* or sleeping areas shall not lead through other sleeping areas, toilet rooms or bathrooms.
5. Egress shall not pass through kitchens, storage rooms, closets or spaces used for similar purposes.

   Exceptions:

   1. *Means of egress* are not prohibited through a kitchen area serving adjoining rooms constituting part of the same *dwelling unit* or *sleeping unit*.
   2. *Means of egress* are not prohibited through stockrooms in Group M occupancies where all of the following are met:

      2.1. The stock is of the same hazard classification as that found in the main retail area.

      2.2. Not more than 50 percent of the *exit access* is through the stockroom.

      2.3. The stockroom is not subject to locking from the egress side.

      2.4. There is a demarcated, minimum 44-inch-wide (1118 mm) *aisle* defined by full- or partial-height fixed walls or similar construction that will maintain the required width and lead directly from the retail area to the *exit* without obstructions.

1016.2.1 Multiple tenants. Where more than one tenant occupies any one floor of a building or structure, each tenant space, *dwelling unit* and *sleeping unit* shall be provided with access to the required *exits* without passing through adjacent tenant spaces, *dwelling units* and *sleeping units*.

Exception: The *means of egress* from a smaller tenant space shall not be prohibited from passing through a larger adjoining tenant space where such rooms or spaces of the smaller tenant occupy less than 10 percent of the area of the larger tenant space through which they pass; are the same or similar occupancy group; a

discernible path of egress travel to an *exit* is provided; and the *means of egress* into the adjoining space is not subject to locking from the egress side. A required *means of egress* serving the larger tenant space shall not pass through the smaller tenant space or spaces.

SECTION 1017
EXIT ACCESS TRAVEL DISTANCE

1017.1 General. Travel distance within the *exit access* portion of the *means of egress* system shall be in accordance with this section.

1017.2 Limitations. *Exit access* travel distance shall not exceed the values given in Table 1017.2.

1017.2.1 Exterior egress balcony increase. *Exit access* travel distances specified in Table 1017.2 shall be increased up to an additional 100 feet (30 480 mm) provided the last portion of the *exit access* leading to the *exit* occurs on an exterior egress balcony constructed in accordance with Section 1021. The length of such balcony shall be not less than the amount of the increase taken.

1017.2.2 Group F-1 and S-1 increase. The maximum *exit access* travel distance shall be 400 feet (122 m) in Group F-1 or S-1 occupancies where all of the following conditions are met:

1. The portion of the building classified as Group F-1 or S-1 is limited to one story in height.
2. The minimum height from the finished floor to the bottom of the ceiling or roof slab or deck is 24 feet (7315 mm).
3. The building is equipped throughout with an *automatic sprinkler system* in accordance with Section 903.3.1.1.

1017.3 Measurement. *Exit access* travel distance shall be measured from the most remote point within a story along the natural and unobstructed path of horizontal and vertical egress travel to the entrance to an *exit*.

Exception: In *open parking garages*, *exit access* travel distance is permitted to be measured to the closest riser of an *exit access stairway* or the closest slope of an *exit access ramp*.

1017.3.1 Exit access stairways and ramps. Travel distance on *exit access stairways* or *ramps* shall be included in the *exit access* travel distance measurement. The measurement along *stairways* shall be made on a plane parallel and tangent to the *stair* tread *nosings* in the center of the *stair* and landings. The measurement along *ramps* shall be made on the walking surface in the center of the *ramp* and landings.

SECTION 1018
AISLES

1018.1 General. *Aisles* and *aisle accessways* serving as a portion of the *exit access* in the *means of egress* system shall comply with the requirements of this section. *Aisles* or *aisle accessways* shall be provided from all occupied portions of the *exit access* that contain seats, tables, furnishings, displays and similar fixtures or equipment. The minimum width or required capacity of *aisles* shall be unobstructed.

Exception: Encroachments complying with Section 1005.7.

1018.2 Aisles in assembly spaces. *Aisles and aisle accessways* serving a room or space used for assembly purposes shall comply with Section 1029.

1018.3 Aisles in Groups B and M. In Group B and M occupancies, the minimum clear aisle width shall be determined by Section 1005.1 for the *occupant load* served, but shall be not less than that required for corridors by Section 1020.2.

Exception: Nonpublic *aisles* serving less than 50 people and not required to be *accessible* by Chapter 11 need not exceed 28 inches (711 mm) in width.

TABLE 1017.2
EXIT ACCESS TRAVEL DISTANCE[a]

OCCUPANCY	WITHOUT SPRINKLER SYSTEM (feet)	WITH SPRINKLER SYSTEM (feet)
A, E, F-1, M, R, S-1	200	250[b]
I-1	Not Permitted	250[b]
B	200	300[c]
F-2, S-2, U	300	400[c]
H-1	Not Permitted	75[d]
H-2	Not Permitted	100[d]
H-3	Not Permitted	150[d]
H-4	Not Permitted	175[d]
H-5	Not Permitted	200[c]
I-2, I-3, I-4	Not Permitted	200[c]

For SI: 1 foot = 304.8 mm.

a. See the following sections for modifications to *exit access* travel distance requirements:
   Section 402.8: For the distance limitation in malls.
   Section 404.9: For the distance limitation through an atrium space.
   Section 407.4: For the distance limitation in Group I-2.
   Sections 408.6.1 and 408.8.1: For the distance limitations in Group I-3.
   Section 411.4: For the distance limitation in special amusement buildings.
   Section 412.7: For the distance limitations in aircraft manufacturing facilities.
   Section 1006.2.2.2: For the distance limitation in refrigeration machinery rooms.
   Section 1006.2.2.3: For the distance limitation in refrigerated rooms and spaces.
   Section 1006.3.2: For buildings with one exit.
   Section 1017.2.2: For increased distance limitation in Groups F-1 and S-1.
   Section 1029.7: For increased limitation in assembly seating.
   Section 3103.4: For temporary structures.
   Section 3104.9: For pedestrian walkways.
b. Buildings equipped throughout with an *automatic sprinkler system* in accordance with Section 903.3.1.1 or 903.3.1.2. See Section 903 for occupancies where *automatic sprinkler systems* are permitted in accordance with Section 903.3.1.2.
c. Buildings equipped throughout with an *automatic sprinkler system* in accordance with Section 903.3.1.1.
d. Group H occupancies equipped throughout with an *automatic sprinkler system* in accordance with Section 903.2.5.1.

1018.4 Aisle accessways in Group M. An *aisle accessway* shall be provided on not less than one side of each element within the *merchandise pad*. The minimum clear width for an *aisle accessway* not required to be *accessible* shall be 30 inches (762 mm). The required clear width of the *aisle accessway* shall be measured perpendicular to the elements and merchandise within the *merchandise pad*. The 30-inch (762 mm) minimum clear width shall be maintained to provide a path to an adjacent *aisle* or *aisle accessway*. The *common path of egress travel* shall not exceed 30 feet (9144 mm) from any point in the *merchandise pad*.

Exception: For areas serving not more than 50 occupants, the *common path of egress travel* shall not exceed 75 feet (22 860 mm).

1018.5 Aisles in other than assembly spaces and Groups B and M. In other than rooms or spaces used for assembly purposes and Group B and M occupancies, the minimum clear *aisle* capacity shall be determined by Section 1005.1 for the occupant load served, but the width shall be not less than that required for corridors by Section 1020.2.

Exception: Nonpublic *aisles* serving less than 50 people and not required to be *accessible* by Chapter 11 need not exceed 28 inches (711 mm) in width.

SECTION 1019
EXIT ACCESS STAIRWAYS AND RAMPS

1019.1 General. *Exit access stairways* and *ramps* serving as an *exit access* component in a *means of egress* system shall comply with the requirements of this section. The number of stories connected by *exit access stairways* and *ramps* shall include *basements*, but not *mezzanines*.

1019.2 All occupancies. *Exit access stairways* and *ramps* that serve floor levels within a single story are not required to be enclosed.

** **1019.3 Occupancies other than Groups I-2 and I-3.** In other than Group I-2 and I-3 occupancies, floor openings containing *exit access stairways* or *ramps* that do not comply with one of the conditions listed in this section shall be enclosed with a shaft enclosure constructed in accordance with Section 713.

1. *Exit access stairways* and *ramps* that serve or atmospherically communicate between only two stories. Such interconnected stories shall not be open to other stories.
2. In Group R-1, R-2 or R-3 occupancies, *exit access stairways* and *ramps* connecting four stories or less serving and contained within an individual *dwelling unit* or *sleeping unit* or *live/work unit*.
3. *Exit access stairways* serving and contained within a Group R-3 congregate residence or a Group R-4 facility are not required to be enclosed.
4. *Exit access stairways* and *ramps* in buildings equipped throughout with an *automatic sprinkler system* in accordance with Section 903.3.1.1, where the area of the vertical opening between stories does not exceed twice the horizontal projected area of the *stairway* or *ramp* and the opening is protected by a draft curtain and closely spaced sprinklers in accordance with NFPA 13. In other than Group B and M occupancies, this provision is limited to openings that do not connect more than four stories.
5. *Exit access stairways* and *ramps* within an *atrium* complying with the provisions of Section 404.
6. *Exit access stairways* and *ramps* in *open parking garages* that serve only the parking garage.
7. *Exit access stairways* and *ramps* serving open-air seating complying with the *exit access* travel distance requirements of Section 1029.7.
8. *Exit access stairways* and *ramps* serving the balcony, gallery or press box and the main assembly floor in occupancies such as theaters, *places of religious worship*, auditoriums and sports facilities.

1019.4 Group I-2 and I-3 occupancies. In Group I-2 and I-3 occupancies, floor openings between stories containing *exit access stairways* or *ramps* are required to be enclosed with a shaft enclosure constructed in accordance with Section 713.

Exception: In Group I-3 occupancies, *exit access stairways* or *ramps* constructed in accordance with Section 408 are not required to be enclosed.

SECTION 1020
CORRIDORS

1020.1 Construction. *Corridors* shall be fire-resistance rated in accordance with Table 1020.1. The *corridor* walls required to be fire-resistance rated shall comply with Section 708 for *fire partitions*.

Exceptions:

1. A *fire-resistance rating* is not required for *corridors* in an occupancy in Group E where each room that is used for instruction has not less than one door opening directly to the exterior and rooms for assembly purposes have not less than one-half of the required *means of egress* doors opening directly to the exterior. Exterior doors specified in this exception are required to be at ground level.
2. A *fire-resistance rating* is not required for *corridors* contained within a *dwelling unit* or *sleeping unit* in an occupancy in Groups I-1 and R.
3. A *fire-resistance rating* is not required for *corridors* in *open parking garages*.
4. A *fire-resistance rating* is not required for *corridors* in an occupancy in Group B that is a space requiring only a single *means of egress* complying with Section 1006.2.
5. *Corridors* adjacent to the *exterior walls* of buildings shall be permitted to have unprotected openings on unrated *exterior walls* where unrated walls are per-

mitted by Table 602 and unprotected openings are permitted by Table 705.8.

TABLE 1020.1
CORRIDOR FIRE-RESISTANCE RATING

OCCUPANCY	OCCUPANT LOAD SERVED BY CORRIDOR	REQUIRED FIRE-RESISTANCE RATING (hours)	
		Without sprinkler system	With sprinkler system[c]
H-1, H-2, H-3	All	Not Permitted	1
H-4, H-5	Greater than 30	Not Permitted	1
A, B, E, F, M, S, U	Greater than 30	1	0
R	Greater than 10	Not Permitted	0.5
I-2[a], I-4	All	Not Permitted	0
I-1, I-3	All	Not Permitted	1[b]

a. For requirements for occupancies in Group I-2, see Sections 407.2 and 407.3.
b. For a reduction in the *fire-resistance rating* for occupancies in Group I-3, see Section 408.8.
c. Buildings equipped throughout with an *automatic sprinkler system* in accordance with Section 903.3.1.1 or 903.3.1.2 where allowed.

1020.2 Width and capacity. The required capacity of *corridors* shall be determined as specified in Section 1005.1, but the minimum width shall be not less than that specified in Table 1020.2.

Exception: In Group I-2 occupancies, *corridors* are not required to have a clear width of 96 inches (2438 mm) in areas where there will not be stretcher or bed movement for access to care or as part of the defend-in-place strategy.

TABLE 1020.2
MINIMUM CORRIDOR WIDTH

OCCUPANCY	MINIMUM WIDTH (inches)
Any facilities not listed below	44
Access to and utilization of mechanical, plumbing or electrical systems or equipment	24
With an occupant load of less than 50	36
Within a *dwelling unit*	36
In Group E with a *corridor* having an occupant load of 100 or more	72
In *corridors* and areas serving stretcher traffic in ambulatory care facilities	72
Group I-2 in areas where required for bed movement	96

For SI: 1 inch = 25.4 mm.

1020.3 Obstruction. The minimum width or required capacity of *corridors* shall be unobstructed.

Exception: Encroachments complying with Section 1005.7.

1020.4 Dead ends. Where more than one *exit* or *exit access doorway* is required, the *exit access* shall be arranged such that there are no dead ends in *corridors* more than 20 feet (6096 mm) in length.

Exceptions:

1. In occupancies in Group I-3 of Condition 2, 3 or 4, the dead end in a *corridor* shall not exceed 50 feet (15 240 mm).
2. In occupancies in Groups B, E, F, I-1, M, R-1, R-2, R-4, S and U, where the building is equipped throughout with an *automatic sprinkler system* in accordance with Section 903.3.1.1, the length of the dead-end *corridors* shall not exceed 50 feet (15 240 mm).
3. A dead-end *corridor* shall not be limited in length where the length of the dead-end *corridor* is less than 2.5 times the least width of the dead-end *corridor*.

1020.5 Air movement in corridors. *Corridors* shall not serve as supply, return, exhaust, relief or ventilation air ducts.

Exceptions:

1. Use of a *corridor* as a source of makeup air for exhaust systems in rooms that open directly onto such *corridors*, including toilet rooms, bathrooms, dressing rooms, smoking lounges and janitor closets, shall be permitted, provided that each such *corridor* is directly supplied with outdoor air at a rate greater than the rate of makeup air taken from the *corridor*.
2. Where located within a *dwelling unit*, the use of *corridors* for conveying return air shall not be prohibited.
3. Where located within tenant spaces of 1,000 square feet (93 m^2) or less in area, utilization of *corridors* for conveying return air is permitted.
4. Incidental air movement from pressurized rooms within health care facilities, provided that the *corridor* is not the primary source of supply or return to the room.

1020.5.1 Corridor ceiling. Use of the space between the *corridor* ceiling and the floor or roof structure above as a return air plenum is permitted for one or more of the following conditions:

1. The *corridor* is not required to be of *fire-resistance-rated* construction.
2. The *corridor* is separated from the plenum by *fire-resistance-rated* construction.
3. The air-handling system serving the *corridor* is shut down upon activation of the air-handling unit *smoke detectors* required by the *International Mechanical Code*.
4. The air-handling system serving the *corridor* is shut down upon detection of sprinkler water flow where the building is equipped throughout with an *automatic sprinkler system*.

5. The space between the *corridor* ceiling and the floor or roof structure above the *corridor* is used as a component of an approved engineered smoke control system.

1020.6 Corridor continuity. *Fire-resistance-rated corridors* shall be continuous from the point of entry to an *exit*, and shall not be interrupted by intervening rooms. Where the path of egress travel within a *fire-resistance-rated corridor* to the exit includes travel along unenclosed *exit access stairways* or *ramps*, the *fire-resistance rating* shall be continuous for the length of the *stairway* or *ramp* and for the length of the connecting *corridor* on the adjacent floor leading to the *exit*.

Exceptions:

1. Foyers, lobbies or reception rooms constructed as required for *corridors* shall not be construed as intervening rooms.
2. Enclosed elevator lobbies as permitted by Item 1 of Section 1016.2 shall not be construed as intervening rooms.

SECTION 1021
EGRESS BALCONIES

1021.1 General. Balconies used for egress purposes shall conform to the same requirements as *corridors* for minimum width, required capacity, headroom, dead ends and projections.

1021.2 Wall separation. Exterior egress balconies shall be separated from the interior of the building by walls and opening protectives as required for *corridors*.

Exception: Separation is not required where the exterior egress balcony is served by not less than two *stairways* and a dead-end travel condition does not require travel past an unprotected opening to reach a *stairway*.

1021.3 Openness. The long side of an egress balcony shall be at least 50 percent open, and the open area above the *guards* shall be so distributed as to minimize the accumulation of smoke or toxic gases.

1021.4 Location. Exterior egress balconies shall have a minimum *fire separation distance* of 10 feet (3048 mm) measured at right angles from the exterior edge of the egress balcony to the following:

1. Adjacent *lot lines*.
2. Other portions of the building.
3. Other buildings on the same lot unless the adjacent building *exterior walls* and openings are protected in accordance with Section 705 based on *fire separation distance*.

For the purposes of this section, other portions of the building shall be treated as separate buildings.

SECTION 1022
EXITS

1022.1 General. *Exits* shall comply with Sections 1022 through 1027 and the applicable requirements of Sections 1003 through 1015. An *exit* shall not be used for any purpose that interferes with its function as a *means of egress*. Once a given level of *exit* protection is achieved, such level of protection shall not be reduced until arrival at the *exit discharge*. *Exits* shall be continuous from the point of entry into the *exit* to the *exit discharge*.

1022.2 Exterior exit doors. Buildings or structures used for human occupancy shall have not less than one exterior door that meets the requirements of Section 1010.1.1.

1022.2.1 Detailed requirements. Exterior *exit* doors shall comply with the applicable requirements of Section 1010.1.

1022.2.2 Arrangement. Exterior *exit* doors shall lead directly to the *exit discharge* or the *public way*.

*

SECTION 1023
INTERIOR EXIT STAIRWAYS AND RAMPS

1023.1 General. *Interior exit stairways* and *ramps* serving as an *exit* component in a *means of egress* system shall comply with the requirements of this section. *Interior exit stairways* and *ramps* shall be enclosed and lead directly to the exterior of the building or shall be extended to the exterior of the building with an *exit passageway* conforming to the requirements of Section 1024, except as permitted in Section 1028.1. An *interior exit stairway* or *ramp* shall not be used for any purpose other than as a *means of egress* and a circulation path.

1023.2 Construction. Enclosures for *interior exit stairways* and *ramps* shall be constructed as *fire barriers* in accordance with Section 707 or *horizontal assemblies* constructed in accordance with Section 711, or both. *Interior exit stairway* and *ramp* enclosures shall have a *fire-resistance rating* of not less than 2 hours where connecting four stories or more and not less than 1 hour where connecting less than four stories. The number of stories connected by the *interior exit stairways* or *ramps* shall include any *basements*, but not any *mezzanines*. *Interior exit stairways* and *ramps* shall have a *fire-resistance rating* not less than the floor assembly penetrated, but need not exceed 2 hours.

Exceptions:

1. *Interior exit stairways* and *ramps* in Group I-3 occupancies in accordance with the provisions of Section 408.3.8.
2. *Interior exit stairways* within an *atrium* enclosed in accordance with Section 404.6.

1023.3 Termination. *Interior exit stairways* and *ramps* shall terminate at an *exit discharge* or a *public way*.

Exception: A combination of *interior exit stairways*, *interior exit ramps* and *exit passageways*, constructed in accordance with Sections 1023.2, 1023.3.1 and 1024, respectively, and forming a continuous protected enclosure, shall be permitted to extend an *interior exit stairway* or *ramp* to the *exit discharge* or a *public way*.

1023.3.1 Extension. Where *interior exit stairways* and *ramps* are extended to an *exit discharge* or a *public way* by

an *exit passageway*, the *interior exit stairway* and *ramp* shall be separated from the *exit passageway* by a *fire barrier* constructed in accordance with Section 707 or a *horizontal assembly* constructed in accordance with Section 711, or both. The *fire-resistance rating* shall be not less than that required for the *interior exit stairway* and *ramp*. A *fire door* assembly complying with Section 716.5 shall be installed in the *fire barrier* to provide a *means of egress* from the *interior exit stairway* and *ramp* to the *exit passageway*. Openings in the *fire barrier* other than the *fire door* assembly are prohibited. Penetrations of the *fire barrier* are prohibited.

Exceptions:

1. Penetrations of the *fire barrier* in accordance with Section 1023.5 shall be permitted.
2. Separation between an *interior exit stairway* or *ramp* and the *exit passageway* extension shall not be required where there are no openings into the *exit passageway* extension.

1023.4 Openings. *Interior exit stairway* and *ramp* opening protectives shall be in accordance with the requirements of Section 716.

Openings in *interior exit stairways* and *ramps* other than unprotected exterior openings shall be limited to those necessary for *exit access* to the enclosure from normally occupied spaces and for egress from the enclosure.

Elevators shall not open into *interior exit stairways* and *ramps*.

1023.5 Penetrations. Penetrations into or through *interior exit stairways* and *ramps* are prohibited except for equipment and ductwork necessary for independent ventilation or pressurization, sprinkler piping, standpipes, electrical raceway for fire department communication systems and electrical raceway serving the *interior exit stairway* and *ramp* and terminating at a steel box not exceeding 16 square inches (0.010 m^2). Such penetrations shall be protected in accordance with Section 714. There shall not be penetrations or communication openings, whether protected or not, between adjacent *interior exit stairways* and *ramps*.

Exception: Membrane penetrations shall be permitted on the outside of the *interior exit stairway* and *ramp*. Such penetrations shall be protected in accordance with Section 714.3.2.

1023.6 Ventilation. Equipment and ductwork for *interior exit stairway* and *ramp* ventilation as permitted by Section 1023.5 shall comply with one of the following items:

1. Such equipment and ductwork shall be located exterior to the building and shall be directly connected to the *interior exit stairway* and *ramp* by ductwork enclosed in construction as required for shafts.
2. Where such equipment and ductwork is located within the *interior exit stairway* and *ramp*, the intake air shall be taken directly from the outdoors and the exhaust air shall be discharged directly to the outdoors, or such air shall be conveyed through ducts enclosed in construction as required for shafts.
3. Where located within the building, such equipment and ductwork shall be separated from the remainder of the building, including other mechanical equipment, with construction as required for shafts.

In each case, openings into the *fire-resistance-rated* construction shall be limited to those needed for maintenance and operation and shall be protected by opening protectives in accordance with Section 716 for shaft enclosures.

The *interior exit stairway* and *ramp* ventilation systems shall be independent of other building ventilation systems.

1023.7 Interior exit stairway and ramp exterior walls. *Exterior walls* of the *interior exit stairway* or *ramp* shall comply with the requirements of Section 705 for *exterior walls*. Where nonrated walls or unprotected openings enclose the exterior of the *stairway* or *ramps* and the walls or openings are exposed by other parts of the building at an angle of less than 180 degrees (3.14 rad), the building *exterior walls* within 10 feet (3048 mm) horizontally of a nonrated wall or unprotected opening shall have a *fire-resistance rating* of not less than 1 hour. Openings within such *exterior* walls shall be protected by opening protectives having a *fire protection rating* of not less than $^3/_4$ hour. This construction shall extend vertically from the ground to a point 10 feet (3048 mm) above the topmost landing of the *stairway* or *ramp*, or to the roof line, whichever is lower.

1023.8 Discharge identification. An *interior exit stairway* and *ramp* shall not continue below its *level of exit discharge* unless an *approved* barrier is provided at the *level of exit discharge* to prevent persons from unintentionally continuing into levels below. Directional exit signs shall be provided as specified in Section 1013.

1023.9 Stairway identification signs. A sign shall be provided at each floor landing in an *interior exit stairway* and *ramp* connecting more than three stories designating the floor level, the terminus of the top and bottom of the *interior exit stairway* and *ramp* and the identification of the *stairway* or *ramp*. The signage shall also state the story of, and the direction to, the *exit discharge* and the availability of roof access from the *interior exit stairway* and *ramp* for the fire department. The sign shall be located 5 feet (1524 mm) above the floor landing in a position that is readily visible when the doors are in the open and closed positions. In addition to the *stairway* identification sign, a floor-level sign in visual characters, raised characters and braille complying with *ICC A117.1* shall be located at each floor-level landing adjacent to the door leading from the *interior exit stairway* and *ramp* into the *corridor* to identify the floor level.

1023.9.1 Signage requirements. *Stairway* identification signs shall comply with all of the following requirements:

1. The signs shall be a minimum size of 18 inches (457 mm) by 12 inches (305 mm).
2. The letters designating the identification of the *interior exit stairway* and *ramp* shall be not less than $1^1/_2$ inches (38 mm) in height.
3. The number designating the floor level shall be not less than 5 inches (127 mm) in height and located in the center of the sign.

4. Other lettering and numbers shall be not less than 1 inch (25 mm) in height.
5. Characters and their background shall have a nonglare finish. Characters shall contrast with their background, with either light characters on a dark background or dark characters on a light background.
6. Where signs required by Section 1023.9 are installed in the *interior exit stairways* and *ramps* of buildings subject to Section 1025, the signs shall be made of the same materials as required by Section 1025.4.

1023.10 Elevator lobby identification signs. At landings in *interior exit stairways* where two or more doors lead to the floor level, any door with direct access to an enclosed elevator lobby shall be identified by signage located on the door or directly adjacent to the door stating "Elevator Lobby." Signage shall be in accordance with Section 1023.9.1, Items 4, 5 and 6.

1023.11 Smokeproof enclosures. Where required by Section 403.5.4 or 405.7.2, *interior exit stairways* and *ramps* shall be *smokeproof enclosures* in accordance with Section 909.20.

1023.11.1 Termination and extension. A *smokeproof enclosure* shall terminate at an *exit discharge* or a *public way*. The *smokeproof enclosure* shall be permitted to be extended by an *exit passageway* in accordance with Section 1023.3. The *exit passageway* shall be without openings other than the *fire door assembly* required by Section 1023.3.1 and those necessary for egress from the *exit passageway*. The *exit passageway* shall be separated from the remainder of the building by 2-hour *fire barriers* constructed in accordance with Section 707 or *horizontal assemblies* constructed in accordance with Section 711, or both.

Exceptions:

1. Openings in the *exit passageway* serving a *smokeproof enclosure* are permitted where the *exit passageway* is protected and pressurized in the same manner as the *smokeproof enclosure*, and openings are protected as required for access from other floors.
2. The *fire barrier* separating the *smokeproof enclosure* from the *exit passageway* is not required, provided the *exit passageway* is protected and pressurized in the same manner as the *smokeproof enclosure*.
3. A *smokeproof enclosure* shall be permitted to egress through areas on the *level of exit discharge* or vestibules as permitted by Section 1028.

1023.11.2 Enclosure access. Access to the *stairway* or *ramp* within a *smokeproof enclosure* shall be by way of a vestibule or an open exterior balcony.

Exception: Access is not required by way of a vestibule or exterior balcony for *stairways* and *ramps* using the pressurization alternative complying with Section 909.20.5.

SECTION 1024
EXIT PASSAGEWAYS

1024.1 Exit passageways. *Exit passageways* serving as an exit component in a *means of egress* system shall comply with the requirements of this section. An *exit passageway* shall not be used for any purpose other than as a *means of egress* and a *circulation path*.

1024.2 Width. The required capacity of *exit passageways* shall be determined as specified in Section 1005.1 but the minimum width shall be not less than 44 inches (1118 mm), except that *exit passageways* serving an occupant load of less than 50 shall be not less than 36 inches (914 mm) in width. The minimum width or required capacity of *exit passageways* shall be unobstructed.

Exception: Encroachments complying with Section 1005.7.

1024.3 Construction. *Exit passageway* enclosures shall have walls, floors and ceilings of not less than a 1-hour *fire-resistance rating*, and not less than that required for any connecting *interior exit stairway* or *ramp*. *Exit passageways* shall be constructed as *fire barriers* in accordance with Section 707 or *horizontal assemblies* constructed in accordance with Section 711, or both.

1024.4 Termination. *Exit passageways* on the *level of exit discharge* shall terminate at an *exit discharge*. *Exit passageways* on other levels shall terminate at an *exit*.

1024.5 Openings. *Exit passageway* opening protectives shall be in accordance with the requirements of Section 716.

Except as permitted in Section 402.8.7, openings in *exit passageways* other than unprotected exterior openings shall be limited to those necessary for *exit access* to the *exit passageway* from normally occupied spaces and for egress from the *exit passageway*.

Where an *interior exit stairway* or *ramp* is extended to an *exit discharge* or a *public way* by an *exit passageway*, the *exit passageway* shall comply with Section 1023.3.1.

Elevators shall not open into an *exit passageway*.

1024.6 Penetrations. Penetrations into or through an *exit passageway* are prohibited except for equipment and ductwork necessary for independent pressurization, sprinkler piping, standpipes, electrical raceway for fire department communication and electrical raceway serving the *exit passageway* and terminating at a steel box not exceeding 16 square inches (0.010 m^2). Such penetrations shall be protected in accordance with Section 714. There shall not be penetrations or communicating openings, whether protected or not, between adjacent *exit passageways*.

Exception: Membrane penetrations shall be permitted on the outside of the *exit passageway*. Such penetrations shall be protected in accordance with Section 714.3.2.

1024.7 Ventilation. Equipment and ductwork for *exit passageway* ventilation as permitted by Section 1024.6 shall comply with one of the following:

1. The equipment and ductwork shall be located exterior to the building and shall be directly connected to the

exit passageway by ductwork enclosed in construction as required for shafts.

2. Where the equipment and ductwork is located within the *exit passageway*, the intake air shall be taken directly from the outdoors and the exhaust air shall be discharged directly to the outdoors, or the air shall be conveyed through ducts enclosed in construction as required for shafts.
3. Where located within the building, the equipment and ductwork shall be separated from the remainder of the building, including other mechanical equipment, with construction as required for shafts.

In each case, openings into the fire-resistance-rated construction shall be limited to those needed for maintenance and operation and shall be protected by opening protectives in accordance with Section 716 for shaft enclosures.

Exit passageway ventilation systems shall be independent of other building ventilation systems.

SECTION 1025
LUMINOUS EGRESS PATH MARKINGS

1025.1 General. *Approved* luminous egress path markings delineating the exit path shall be provided in *high-rise buildings* of Group A, B, E, I, M, and R-1 occupancies in accordance with Sections 1025.1 through 1025.5.

Exception: Luminous egress path markings shall not be required on the *level of exit discharge* in lobbies that serve as part of the exit path in accordance with Section 1028.1, Exception 1.

1025.2 Markings within exit components. Egress path markings shall be provided in *interior exit stairways*, *interior exit ramps* and *exit passageways*, in accordance with Sections 1025.2.1 through 1025.2.6.

1025.2.1 Steps. A solid and continuous stripe shall be applied to the horizontal leading edge of each step and shall extend for the full length of the step. Outlining stripes shall have a minimum horizontal width of 1 inch (25 mm) and a maximum width of 2 inches (51 mm). The leading edge of the stripe shall be placed not more than $^1/_2$ inch (12.7 mm) from the leading edge of the step and the stripe shall not overlap the leading edge of the step by not more than $^1/_2$ inch (12.7 mm) down the vertical face of the step.

Exception: The minimum width of 1 inch (25 mm) shall not apply to outlining stripes listed in accordance with UL 1994.

1025.2.2 Landings. The leading edge of landings shall be marked with a stripe consistent with the dimensional requirements for steps.

1025.2.3 Handrails. *Handrails* and handrail extensions shall be marked with a solid and continuous stripe having a minimum width of 1 inch (25 mm). The stripe shall be placed on the top surface of the *handrail* for the entire length of the *handrail*, including extensions and newel post caps. Where *handrails* or handrail extensions bend or turn corners, the stripe shall not have a gap of more than 4 inches (102 mm).

Exception: The minimum width of 1 inch (25 mm) shall not apply to outlining stripes listed in accordance with UL 1994.

1025.2.4 Perimeter demarcation lines. Stair landings and other floor areas within *interior exit stairways*, *interior exit ramps* and *exit passageways*, with the exception of the sides of steps, shall be provided with solid and continuous demarcation lines on the floor or on the walls or a combination of both. The stripes shall be 1 to 2 inches (25 mm to 51 mm) wide with interruptions not exceeding 4 inches (102 mm).

Exception: The minimum width of 1 inch (25 mm) shall not apply to outlining stripes listed in accordance with UL 1994.

1025.2.4.1 Floor-mounted demarcation lines. Perimeter demarcation lines shall be placed within 4 inches (102 mm) of the wall and shall extend to within 2 inches (51 mm) of the markings on the leading edge of landings. The demarcation lines shall continue across the floor in front of all doors.

Exception: Demarcation lines shall not extend in front of *exit discharge* doors that lead out of an *exit* and through which occupants must travel to complete the exit path.

1025.2.4.2 Wall-mounted demarcation lines. Perimeter demarcation lines shall be placed on the wall with the bottom edge of the stripe not more than 4 inches (102 mm) above the finished floor. At the top or bottom of the *stairs*, demarcation lines shall drop vertically to the floor within 2 inches (51 mm) of the step or landing edge. Demarcation lines on walls shall transition vertically to the floor and then extend across the floor where a line on the floor is the only practical method of outlining the path. Where the wall line is broken by a door, demarcation lines on walls shall continue across the face of the door or transition to the floor and extend across the floor in front of such door.

Exception: Demarcation lines shall not extend in front of *exit discharge* doors that lead out of an *exit* and through which occupants must travel to complete the exit path.

1025.2.4.3 Transition. Where a wall-mounted demarcation line transitions to a floor-mounted demarcation line, or vice versa, the wall-mounted demarcation line shall drop vertically to the floor to meet a complimentary extension of the floor-mounted demarcation line, thus forming a continuous marking.

1025.2.5 Obstacles. Obstacles at or below 6 feet 6 inches (1981 mm) in height and projecting more than 4 inches (102 mm) into the egress path shall be outlined with markings not less than 1 inch (25 mm) in width comprised of a pattern of alternating equal bands, of luminous material

and black, with the alternating bands not more than 2 inches (51 mm) thick and angled at 45 degrees (0.79 rad). Obstacles shall include, but are not limited to, standpipes, hose cabinets, wall projections and restricted height areas. However, such markings shall not conceal any required information or indicators including but not limited to instructions to occupants for the use of standpipes.

1025.2.6 Doors within the exit path. Doors through which occupants must pass in order to complete the exit path shall be provided with markings complying with Sections 1025.2.6.1 through 1025.2.6.3.

1025.2.6.1 Emergency exit symbol. The doors shall be identified by a low-location luminous emergency exit symbol complying with NFPA 170. The exit symbol shall be not less than 4 inches (102 mm) in height and shall be mounted on the door, centered horizontally, with the top of the symbol not higher than 18 inches (457 mm) above the finished floor.

1025.2.6.2 Door hardware markings. Door hardware shall be marked with not less than 16 square inches (406 mm^2) of luminous material. This marking shall be located behind, immediately adjacent to, or on the door handle or escutcheon. Where a panic bar is installed, such material shall not be less than 1 inch (25 mm) wide for the entire length of the actuating bar or touch-pad.

1025.2.6.3 Door frame markings. The top and sides of the door frame shall be marked with a solid and continuous 1-inch- to 2-inch-wide (25 mm to 51 mm) stripe. Where the door molding does not provide sufficient flat surface on which to locate the stripe, the stripe shall be permitted to be located on the wall surrounding the frame.

1025.3 Uniformity. Placement and dimensions of markings shall be consistent and uniform throughout the same enclosure.

1025.4 Self-luminous and photoluminescent. Luminous egress path markings shall be permitted to be made of any material, including paint, provided that an electrical charge is not required to maintain the required luminance. Such materials shall include, but not be limited to, *self-luminous* materials and *photoluminescent* materials. Materials shall comply with either of the following standards:

1. UL 1994.
2. ASTM E 2072, except that the charging source shall be 1 footcandle (11 lux) of fluorescent illumination for 60 minutes, and the minimum luminance shall be 30 milicandelas per square meter at 10 minutes and 5 milicandelas per square meter after 90 minutes.

1025.5 Illumination. Where *photoluminescent* exit path markings are installed, they shall be provided with not less than 1 footcandle (11 lux) of illumination for not less than 60 minutes prior to periods when the building is occupied and continuously during occupancy.

SECTION 1026
HORIZONTAL EXITS

1026.1 Horizontal exits. *Horizontal exits* serving as an *exit* in a *means of egress* system shall comply with the requirements of this section. A *horizontal exit* shall not serve as the only *exit* from a portion of a building, and where two or more *exits* are required, not more than one-half of the total number of *exits* or total *exit* minimum width or required capacity shall be *horizontal exits*.

Exceptions:

1. *Horizontal exits* are permitted to comprise two-thirds of the required *exits* from any building or floor area for occupancies in Group I-2.
2. *Horizontal exits* are permitted to comprise 100 percent of the *exits* required for occupancies in Group I-3. Not less than 6 square feet (0.6 m^2) of accessible space per occupant shall be provided on each side of the *horizontal exit* for the total number of people in adjoining compartments.

1026.2 Separation. The separation between buildings or refuge areas connected by a *horizontal exit* shall be provided by a *fire wall* complying with Section 706; or by a *fire barrier* complying with Section 707 or a *horizontal assembly* complying with Section 711, or both. The minimum *fire-resistance rating* of the separation shall be 2 hours. Opening protectives in *horizontal exits* shall also comply with Section 716. Duct and air transfer openings in a *fire wall* or *fire barrier* that serves as a *horizontal exit* shall also comply with Section 717. The *horizontal exit* separation shall extend vertically through all levels of the building unless floor assemblies have a *fire-resistance rating* of not less than 2 hours with no unprotected openings.

Exception: A *fire-resistance rating* is not required at *horizontal exits* between a building area and an above-grade *pedestrian walkway* constructed in accordance with Section 3104, provided that the distance between connected buildings is more than 20 feet (6096 mm).

Horizontal exits constructed as *fire barriers* shall be continuous from *exterior wall* to *exterior wall* so as to divide completely the floor served by the *horizontal exit*.

1026.3 Opening protectives. *Fire doors* in *horizontal exits* shall be self-closing or automatic-closing when activated by a *smoke detector* in accordance with Section 716.5.9.3. Doors, where located in a cross-corridor condition, shall be automatic-closing by activation of a *smoke detector* installed in accordance with Section 716.5.9.3.

1026.4 Refuge area. The refuge area of a *horizontal exit* shall be a space occupied by the same tenant or a public area and each such refuge area shall be adequate to accommodate the original *occupant load* of the refuge area plus the *occupant load* anticipated from the adjoining compartment. The anticipated *occupant load* from the adjoining compartment shall be based on the capacity of the *horizontal exit doors* entering the refuge area.

1026.4.1 Capacity. The capacity of the refuge area shall be computed based on a *net floor area* allowance of 3 square feet (0.2787 m^2) for each occupant to be accommodated therein.

Exceptions: The *net floor area* allowable per occupant shall be as follows for the indicated occupancies:

1. Six square feet (0.6 m^2) per occupant for occupancies in Group I-3.
2. Fifteen square feet (1.4 m^2) per occupant for ambulatory occupancies in Group I-2.
3. Thirty square feet (2.8 m^2) per occupant for non-ambulatory occupancies in Group I-2.

1026.4.2 Number of exits. The refuge area into which a *horizontal exit* leads shall be provided with *exits* adequate to meet the occupant requirements of this chapter, but not including the added *occupant load* imposed by persons entering the refuge area through *horizontal exits* from other areas. Not less than one refuge area exit shall lead directly to the exterior or to an *interior exit stairway* or *ramp*.

Exception: The adjoining compartment shall not be required to have a *stairway* or door leading directly outside, provided the refuge area into which a *horizontal exit* leads has *stairways* or doors leading directly outside and are so arranged that egress shall not require the occupants to return through the compartment from which egress originates.

SECTION 1027
EXTERIOR EXIT STAIRWAYS AND RAMPS

1027.1 Exterior exit stairways and ramps. *Exterior exit stairways* and *ramps* serving as an element of a required *means of egress* shall comply with this section.

1027.2 Use in a means of egress. *Exterior exit stairways* shall not be used as an element of a required *means of egress* for Group I-2 occupancies. For occupancies in other than Group I-2, *exterior exit stairways* and *ramps* shall be permitted as an element of a required *means of egress* for buildings not exceeding six stories above *grade plane* or that are not *high-rise buildings*.

1027.3 Open side. *Exterior exit stairways* and *ramps* serving as an element of a required *means of egress* shall be open on not less than one side, except for required structural columns, beams, *handrails* and *guards*. An open side shall have not less than 35 square feet (3.3 m^2) of aggregate open area adjacent to each floor level and the level of each intermediate landing. The required open area shall be located not less than 42 inches (1067 mm) above the adjacent floor or landing level.

1027.4 Side yards. The open areas adjoining *exterior exit stairways* or *ramps* shall be either *yards*, *courts* or *public ways*; the remaining sides are permitted to be enclosed by the *exterior walls* of the building.

1027.5 Location. *Exterior exit stairways* and *ramps* shall have a minimum fire separation distance of 10 feet (3048 mm) measured at right angles from the exterior edge of the *stairway* or *ramps*, including landings, to:

1. Adjacent *lot lines*.
2. Other portions of the building.
3. Other buildings on the same lot unless the adjacent building *exterior walls* and openings are protected in accordance with Section 705 based on *fire separation distance*.

For the purposes of this section, other portions of the building shall be treated as separate buildings.

1027.6 Exterior exit stairway and ramp protection. *Exterior exit stairways* and *ramps* shall be separated from the interior of the building as required in Section 1023.2. Openings shall be limited to those necessary for egress from normally occupied spaces. Where a vertical plane projecting from the edge of an *exterior exit stairway* or *ramp* and landings is exposed by other parts of the building at an angle of less than 180 degrees (3.14 rad), the exterior wall shall be rated in accordance with Section 1023.7.

Exceptions:

1. Separation from the interior of the building is not required for occupancies, other than those in Group R-1 or R-2, in buildings that are not more than two stories above *grade plane* where a *level of exit discharge* serving such occupancies is the first story above *grade plane*.
2. Separation from the interior of the building is not required where the *exterior exit stairway* or *ramp* is served by an *exterior exit ramp* or balcony that connects two remote *exterior exit stairways* or other *approved exits* with a perimeter that is not less than 50 percent open. To be considered open, the opening shall be not less than 50 percent of the height of the enclosing wall, with the top of the openings not less than 7 feet (2134 mm) above the top of the balcony.
3. Separation from the open-ended *corridor* of the building is not required for *exterior exit stairways* or *ramps*, provided that Items 3.1 through 3.5 are met:
   - 3.1. The building, including open-ended *corridors*, and *stairways* and *ramps*, shall be equipped throughout with an *automatic sprinkler system* in accordance with Section 903.3.1.1 or 903.3.1.2.
   - 3.2. The open-ended *corridors* comply with Section 1020.
   - 3.3. The open-ended *corridors* are connected on each end to an *exterior exit stairway* or *ramp* complying with Section 1027.
   - 3.4. The *exterior walls* and openings adjacent to the *exterior exit stairway* or *ramp* comply with Section 1023.7.
   - 3.5. At any location in an open-ended *corridor* where a change of direction exceeding 45 degrees (0.79 rad) occurs, a clear opening

of not less than 35 square feet (3.3 m^2) or an *exterior stairway* or *ramp* shall be provided. Where clear openings are provided, they shall be located so as to minimize the accumulation of smoke or toxic gases.

SECTION 1028
EXIT DISCHARGE

1028.1 General. *Exits* shall discharge directly to the exterior of the building. The *exit discharge* shall be at grade or shall provide a direct path of egress travel to grade. The *exit discharge* shall not reenter a building. The combined use of Exceptions 1 and 2 shall not exceed 50 percent of the number and minimum width or required capacity of the required exits.

Exceptions:

1. Not more than 50 percent of the number and minimum width or required capacity of *interior exit stairways* and *ramps* is permitted to egress through areas on the level of discharge provided all of the following conditions are met:
   - 1.1. Discharge of *interior exit stairways* and *ramps* shall be provided with a free and unobstructed path of travel to an exterior *exit* door and such *exit* is readily visible and identifiable from the point of termination of the enclosure.
   - 1.2. The entire area of the *level of exit discharge* is separated from areas below by construction conforming to the *fire-resistance rating* for the enclosure.
   - 1.3. The egress path from the *interior exit stairway* and *ramp* on the *level of exit discharge* is protected throughout by an *approved automatic sprinkler system*. Portions of the *level of exit discharge* with access to the egress path shall be either equipped throughout with an *automatic sprinkler system* installed in accordance with Section 903.3.1.1 or 903.3.1.2, or separated from the egress path in accordance with the requirements for the enclosure of *interior exit stairways* or *ramps*.
   - 1.4. Where a required *interior exit stairway* or *ramp* and an *exit access stairway* or *ramp* serve the same floor level and terminate at the same *level of exit discharge*, the termination of the *exit access stairway* or *ramp* and the *exit discharge* door of the *interior exit stairway* or *ramp* shall be separated by a distance of not less than 30 feet (9144 mm) or not less than one-fourth the length of the maximum overall diagonal dimension of the building, whichever is less. The distance shall be measured in a straight line between the *exit discharge* door from the *interior exit stairway* or *ramp* and the last tread of the *exit access stairway* or termination of slope of the *exit access ramp*.
2. Not more than 50 percent of the number and minimum width or required capacity of the *interior exit stairways* and *ramps* is permitted to egress through a vestibule provided all of the following conditions are met:
   - 2.1. The entire area of the vestibule is separated from areas below by construction conforming to the *fire-resistance rating* of the *interior exit stairway* or *ramp enclosure*.
   - 2.2. The depth from the exterior of the building is not greater than 10 feet (3048 mm) and the length is not greater than 30 feet (9144 mm).
   - 2.3. The area is separated from the remainder of the *level of exit discharge* by a *fire partition* constructed in accordance with Section 708.

     Exception: The maximum transmitted temperature rise is not required.
   - 2.4. The area is used only for *means of egress* and *exits* directly to the outside.
3. *Horizontal exits* complying with Section 1026 shall not be required to discharge directly to the exterior of the building.

1028.2 Exit discharge width or capacity. The minimum width or required capacity of the *exit discharge* shall be not less than the minimum width or required capacity of the *exits* being served.

1028.3 Exit discharge components. *Exit discharge* components shall be sufficiently open to the exterior so as to minimize the accumulation of smoke and toxic gases.

1028.4 Egress courts. *Egress courts* serving as a portion of the *exit discharge* in the *means of egress* system shall comply with the requirements of Sections 1028.4.1 and 1028.4.2.

1028.4.1 Width or capacity. The required capacity of *egress courts* shall be determined as specified in Section 1005.1, but the minimum width shall be not less than 44 inches (1118 mm), except as specified herein. *Egress courts* serving Group R-3 and U occupancies shall be not less than 36 inches (914 mm) in width. The required capacity and width of *egress courts* shall be unobstructed to a height of 7 feet (2134 mm).

Exception: Encroachments complying with Section 1005.7.

Where an *egress court* exceeds the minimum required width and the width of such *egress court* is then reduced along the path of exit travel, the reduction in width shall be gradual. The transition in width shall be affected by a guard not less than 36 inches (914 mm) in height and shall not create an angle of more than 30 degrees (0.52 rad) with respect to the axis of the *egress court* along the path of egress travel. The width of the *egress court* shall not be less than the required capacity.

1028.4.2 Construction and openings. Where an *egress court* serving a building or portion thereof is less than 10 feet (3048 mm) in width, the *egress court* walls shall have not less than 1-hour *fire-resistance-rated* construction for a distance of 10 feet (3048 mm) above the floor of the *egress court*. Openings within such walls shall be protected by opening protectives having a fire protection rating of not less than $^3/_4$ hour.

Exceptions:

1. *Egress courts* serving an *occupant load* of less than 10.
2. *Egress courts* serving Group R-3.

1028.5 Access to a public way. The *exit discharge* shall provide a direct and unobstructed access to a *public way*.

Exception: Where access to a *public way* cannot be provided, a safe dispersal area shall be provided where all of the following are met:

1. The area shall be of a size to accommodate not less than 5 square feet (0.46 m^2) for each person.
2. The area shall be located on the same lot not less than 50 feet (15 240 mm) away from the building requiring egress.
3. The area shall be permanently maintained and identified as a safe dispersal area.
4. The area shall be provided with a safe and unobstructed path of travel from the building.

SECTION 1029
ASSEMBLY

1029.1 General. A room or space used for assembly purposes that contains seats, tables, displays, equipment or other material shall comply with this section.

1029.1.1 Bleachers. *Bleachers*, *grandstands* and *folding and telescopic seating*, that are not building elements, shall comply with ICC 300.

1029.1.1.1 Spaces under grandstands and bleachers. Where spaces under *grandstands* or *bleachers* are used for purposes other than ticket booths less than 100 square feet (9.29 m^2) and toilet rooms, such spaces shall be separated by *fire barriers* complying with Section 707 and *horizontal assemblies* complying with Section 711 with not less than 1-hour *fire-resistance-rated* construction.

1029.2 Assembly main exit. A building, room or space used for assembly purposes that has an *occupant load* of greater than 300 and is provided with a main *exit*, that main *exit* shall be of sufficient capacity to accommodate not less than one-half of the *occupant load*, but such capacity shall be not less than the total required capacity of all *means of egress* leading to the *exit*. Where the building is classified as a Group A occupancy, the main *exit* shall front on not less than one street or an unoccupied space of not less than 10 feet (3048 mm) in width that adjoins a street or *public way*. In a building, room or space used for assembly purposes where there is not a well-defined main *exit* or where multiple main *exits* are provided, *exits* shall be permitted to be distributed around the perimeter of the building provided that the total capacity of egress is not less than 100 percent of the required capacity.

1029.3 Assembly other exits. In addition to having access to a main *exit*, each level in a building used for assembly purposes having an *occupant load* greater than 300 and provided with a main *exit*, shall be provided with additional *means of egress* that shall provide an egress capacity for not less than one-half of the total *occupant load* served by that level and shall comply with Section 1007.1. In a building used for assembly purposes where there is not a well-defined main *exit* or where multiple main *exits* are provided, *exits* for each level shall be permitted to be distributed around the perimeter of the building, provided that the total width of egress is not less than 100 percent of the required width.

1029.4 Foyers and lobbies. In Group A-1 occupancies, where persons are admitted to the building at times when seats are not available, such persons shall be allowed to wait in a lobby or similar space, provided such lobby or similar space shall not encroach upon the minimum width or required capacity of the *means of egress*. Such foyer, if not directly connected to a public street by all the main entrances or *exits*, shall have a straight and unobstructed *corridor* or path of travel to every such main entrance or *exit*.

1029.5 Interior balcony and gallery means of egress. For balconies, galleries or press boxes having a seating capacity of 50 or more located in a building, room or space used for assembly purposes, not less than two *means of egress* shall be provided, with one from each side of every balcony, gallery or press box.

1029.6 Capacity of aisle for assembly. The required capacity of *aisles* shall be not less than that determined in accordance with Section 1029.6.1 where *smoke-protected assembly seating* is not provided and with Section 1029.6.2 or 1029.6.3 where *smoke-protected assembly seating* is provided.

1029.6.1 Without smoke protection. The required capacity in inches (mm) of the *aisles* for assembly seating without smoke protection shall be not less than the *occupant load* served by the egress element in accordance with all of the following, as applicable:

1. Not less than 0.3 inch (7.6 mm) of *aisle* capacity for each occupant served shall be provided on stepped *aisles* having riser heights 7 inches (178 mm) or less and tread depths 11 inches (279 mm) or greater, measured horizontally between tread *nosings*.
2. Not less than 0.005 inch (0.127 mm) of additional *aisle* capacity for each occupant shall be provided for each 0.10 inch (2.5 mm) of riser height above 7 inches (178 mm).
3. Where egress requires stepped *aisle* descent, not less than 0.075 inch (1.9 mm) of additional *aisle* capacity for each occupant shall be provided on those portions of *aisle* capacity having no *handrail* within a horizontal distance of 30 inches (762 mm).

4. Ramped *aisles*, where slopes are steeper than one unit vertical in 12 units horizontal (8-percent slope), shall have not less than 0.22 inch (5.6 mm) of clear *aisle* capacity for each occupant served. Level or ramped *aisles*, where slopes are not steeper than one unit vertical in 12 units horizontal (8-percent slope), shall have not less than 0.20 inch (5.1 mm) of clear *aisle* capacity for each occupant served.

1029.6.2 Smoke-protected assembly seating. The required capacity in inches (mm) of the aisle for *smoke-protected assembly seating* shall be not less than the occupant load served by the egress element multiplied by the appropriate factor in Table 1029.6.2. The total number of seats specified shall be those within the space exposed to the same smoke-protected environment. Interpolation is permitted between the specific values shown. A life safety evaluation, complying with NFPA 101, shall be done for a facility utilizing the reduced width requirements of Table 1029.6.2 for *smoke-protected assembly seating*.

Exception: For outdoor *smoke-protected assembly seating* with an *occupant load* not greater than 18,000, the required capacity in inches (mm) shall be determined using the factors in Section 1029.6.3.

1029.6.2.1 Smoke control. *Aisles* and *aisle accessways* serving a *smoke-protected assembly seating* area shall be provided with a smoke control system complying with Section 909 or natural ventilation designed to maintain the smoke level not less than 6 feet (1829 mm) above the floor of the *means of egress*.

1029.6.2.2 Roof height. A *smoke-protected assembly seating* area with a roof shall have the lowest portion of the roof deck not less than 15 feet (4572 mm) above the highest *aisle* or *aisle accessway*.

Exception: A roof canopy in an outdoor stadium shall be permitted to be less than 15 feet (4572 mm) above the highest *aisle* or *aisle accessway* provided that there are no objects less than 80 inches (2032 mm) above the highest *aisle* or *aisle accessway*.

1029.6.2.3 Automatic sprinklers. Enclosed areas with walls and ceilings in buildings or structures containing *smoke-protected assembly seating* shall be protected with an *approved automatic sprinkler system* in accordance with Section 903.3.1.1.

Exceptions:

1. The floor area used for contests, performances or entertainment provided the roof construction is more than 50 feet (15 240 mm) above the floor level and the use is restricted to low fire hazard uses.
2. Press boxes and storage facilities less than 1,000 square feet (93 m^2) in area.
3. Outdoor seating facilities where seating and the *means of egress* in the seating area are essentially open to the outside.

1029.6.3 Outdoor smoke-protected assembly seating. The required capacity in inches (mm) of *aisles* shall be not less than the total *occupant load* served by the egress element multiplied by 0.08 (2.0 mm) where egress is by stepped *aisle* and multiplied by 0.06 (1.52 mm) where egress is by level *aisles* and ramped *aisles*.

Exception: The required capacity in inches (mm) of *aisles* shall be permitted to comply with Section 1029.6.2 for the number of seats in the outdoor *smoke-protected assembly seating* where Section 1029.6.2 permits less capacity.

1029.7 Travel distance. *Exits* and *aisles* shall be so located that the travel distance to an *exit* door shall be not greater than 200 feet (60 960 mm) measured along the line of travel in nonsprinklered buildings. Travel distance shall be not more than 250 feet (76 200 mm) in sprinklered buildings. Where *aisles* are provided for seating, the distance shall be measured along the *aisles* and *aisle accessways* without travel over or on the seats.

Exceptions:

1. *Smoke-protected assembly seating*: The travel distance from each seat to the nearest entrance to a vomitory or concourse shall not exceed 200 feet (60 960 mm). The travel distance from the entrance to the vomitory or concourse to a *stairway*, *ramp* or walk on the exterior of the building shall not exceed 200 feet (60 960 mm).

TABLE 1029.6.2
CAPACITY FOR AISLES FOR SMOKE-PROTECTED ASSEMBLY

TOTAL NUMBER OF SEATS IN THE SMOKE-PROTECTED ASSEMBLY SEATING	INCHES OF CAPACITY PER SEAT SERVED			
	Stepped aisles with handrails within 30 inches	Stepped aisles without handrails within 30 inches	Level aisles or ramped aisles not steeper than 1 in 10 in slope	Ramped aisles steeper than 1 in 10 in slope
Equal to or less than 5,000	0.200	0.250	0.150	0.165
10,000	0.130	0.163	0.100	0.110
15,000	0.096	0.120	0.070	0.077
20,000	0.076	0.095	0.056	0.062
Equal to or greater than 25,000	0.060	0.075	0.044	0.048

For SI: 1 inch = 25.4 mm.

2. Open-air seating: The travel distance from each seat to the building exterior shall not exceed 400 feet (122 m). The travel distance shall not be limited in facilities of Type I or II construction.

1029.8 Common path of egress travel. The *common path of egress travel* shall not exceed 30 feet (9144 mm) from any seat to a point where an occupant has a choice of two paths of egress travel to two *exits*.

Exceptions:

1. For areas serving less than 50 occupants, the *common path of egress travel* shall not exceed 75 feet (22 860 mm).
2. For *smoke-protected assembly seating*, the *common path of egress travel* shall not exceed 50 feet (15 240 mm).

1029.8.1 Path through adjacent row. Where one of the two paths of travel is across the *aisle* through a row of seats to another *aisle*, there shall be not more than 24 seats between the two *aisles*, and the minimum clear width between rows for the row between the two *aisles* shall be 12 inches (305 mm) plus 0.6 inch (15.2 mm) for each additional seat above seven in the row between *aisles*.

Exception: For *smoke-protected assembly seating* there shall be not more than 40 seats between the two *aisles* and the minimum clear width shall be 12 inches (305 mm) plus 0.3 inch (7.6 mm) for each additional seat.

1029.9 Assembly aisles are required. Every occupied portion of any building, room or space used for assembly purposes that contains seats, tables, displays, similar fixtures or equipment shall be provided with *aisles* leading to *exits* or *exit access doorways* in accordance with this section.

1029.9.1 Minimum aisle width. The minimum clear width for *aisles* shall comply with one of the following:

1. Forty-eight inches (1219 mm) for stepped *aisles* having seating on each side.

   Exception: Thirty-six inches (914 mm) where the stepped *aisles* serve less than 50 seats.

2. Thirty-six inches (914 mm) for stepped *aisles* having seating on only one side.

   Exception: Twenty-three inches (584 mm) between an *aisle stair handrail* and seating where a stepped *aisle* does not serve more than five rows on one side.

3. Twenty-three inches (584 mm) between a stepped *aisle handrail* or *guard* and seating where the stepped *aisle* is subdivided by a mid-aisle *handrail*.
4. Forty-two inches (1067 mm) for level or ramped *aisles* having seating on both sides.

   Exceptions:

   1. Thirty-six inches (914 mm) where the *aisle* serves less than 50 seats.
   2. Thirty inches (762 mm) where the *aisle* does not serve more than 14 seats.

5. Thirty-six inches (914 mm) for level or ramped *aisles* having seating on only one side.

   Exception: For other than ramped *aisles* that serve as part of an *accessible route*, 30 inches (762 mm) where the ramped *aisle* does not serve more than 14 seats.

1029.9.2 Aisle catchment area. The *aisle* shall provide sufficient capacity for the number of persons accommodated by the catchment area served by the *aisle*. The catchment area served by an *aisle* is that portion of the total space served by that section of the *aisle*. In establishing catchment areas, the assumption shall be made that there is a balanced use of all *means of egress*, with the number of persons in proportion to egress capacity.

1029.9.3 Converging aisles. Where *aisles* converge to form a single path of egress travel, the required capacity of that path shall be not less than the combined required capacity of the converging aisles.

1029.9.4 Uniform width and capacity. Those portions of *aisles*, where egress is possible in either of two directions, shall be uniform in minimum width or required capacity.

1029.9.5 Dead end aisles. Each end of an *aisle* shall be continuous to a cross *aisle*, foyer, doorway, vomitory, concourse or *stairway* in accordance with Section 1029.9.7 having access to an *exit*.

Exceptions:

1. Dead-end *aisles* shall be not greater than 20 feet (6096 mm) in length.
2. Dead-end *aisles* longer than 16 rows are permitted where seats beyond the 16th row dead-end *aisle* are not more than 24 seats from another *aisle*, measured along a row of seats having a minimum clear width of 12 inches (305 mm) plus 0.6 inch (15.2 mm) for each additional seat above seven in the row where seats have backrests or beyond 10 where seats are without backrests in the row.
3. For *smoke-protected assembly seating*, the dead end *aisle* length of vertical *aisles* shall not exceed a distance of 21 rows.
4. For *smoke-protected assembly seating*, a longer dead-end *aisle* is permitted where seats beyond the 21-row dead-end *aisle* are not more than 40 seats from another *aisle*, measured along a row of seats having an *aisle* accessway with a minimum clear width of 12 inches (305 mm) plus 0.3 inch (7.6 mm) for each additional seat above seven in the row where seats have backrests or beyond 10 where seats are without backrests in the row.

1029.9.6 Aisle measurement. The clear width for *aisles* shall be measured to walls, edges of seating and tread edges except for permitted projections.

Exception: The clear width of *aisles* adjacent to seating at tables shall be permitted to be measured in accordance with Section 1029.12.1.

1029.9.6.1 Assembly aisle obstructions. There shall not be obstructions in the minimum width or required capacity of *aisles*.

Exception: *Handrails* are permitted to project into the required width of stepped *aisles* and ramped *aisles* in accordance with Section 1014.8.

1029.9.7 Stairways connecting to stepped aisles. A *stairway* that connects a stepped *aisle* to a cross *aisle* or concourse shall be permitted to comply with the assembly *aisle* walking surface requirements of Section 1029.12. Transitions between *stairways* and stepped *aisles* shall comply with Section 1029.10.

1029.9.8 Stairways connecting to vomitories. A *stairway* that connects a vomitory to a cross aisle or concourse shall be permitted to comply with the assembly *aisle* walking surface requirements of Section 1029.12. Transitions between *stairways* and stepped *aisles* shall comply with Section 1029.10.

1029.10 Transitions. Transitions between *stairways* and stepped *aisles* shall comply with either Section 1029.10.1 or 1029.10.2.

1029.10.1 Transitions and stairways that maintain stepped aisle riser and tread dimensions. Stepped *aisles*, transitions and *stairways* that maintain riser and tread dimensions shall comply with Section 1029.12 as one *exit access* component.

1029.10.2 Transitions to stairways that do not maintain stepped aisle riser and tread dimensions. Transitions to *stairways* from stepped *aisles* with riser and tread dimensions that differ from the *stairways* shall comply with Sections 1029.10.2.1 and 1029.10.3.

1029.10.2.1 Stairways and stepped aisles in a straight run. Transitions where the *stairway* is a straight run from the stepped *aisle* shall have a minimum depth of 22 inches (559 mm) where the treads on the descending side of the transition have greater depth and 30 inches (762 mm) where the treads on the descending side of the transition have lesser depth.

1029.10.2.2 Stairways and stepped aisles that change direction. Transitions where the *stairway* changes direction from the stepped *aisle* shall have a minimum depth of 11 inches (280 mm) or the stepped *aisle* tread depth, whichever is greater, between the stepped *aisle* and *stairway*.

1029.10.3 Transition marking. A distinctive marking stripe shall be provided at each *nosing* or leading edge adjacent to the transition. Such stripe shall be not less than 1 inch (25 mm), and not more than 2 inches (51 mm), wide. The edge marking stripe shall be distinctively different from the stepped *aisle* contrasting marking stripe.

1029.11 Construction. *Aisles*, stepped *aisles* and ramped *aisles* shall be built of materials consistent with the types permitted for the type of construction of the building.

Exception: Wood *handrails* shall be permitted for all types of construction.

1029.11.1 Walking surface. The surface of *aisles*, stepped *aisles* and ramped *aisles* shall be of slip-resistant materials that are securely attached. The surface for stepped *aisles* shall comply with Section 1011.7.1.

1029.11.2 Outdoor conditions. Outdoor *aisles*, stepped *aisles* and ramped *aisles* and outdoor approaches to *aisles*, stepped *aisles* and ramped *aisles* shall be designed so that water will not accumulate on the walking surface.

1029.12 Aisle accessways. *Aisle accessways* for seating at tables shall comply with Section 1029.12.1. *Aisle accessways* for seating in rows shall comply with Section 1029.12.2.

1029.12.1 Seating at tables. Where seating is located at a table or counter and is adjacent to an *aisle* or *aisle accessway*, the measurement of required clear width of the *aisle* or *aisle accessway* shall be made to a line 19 inches (483 mm) away from and parallel to the edge of the table or counter. The 19-inch (483 mm) distance shall be measured perpendicular to the side of the table or counter. In the case of other side boundaries for *aisles* or *aisle accessways*, the clear width shall be measured to walls, edges of seating and tread edges.

Exception: Where tables or counters are served by *fixed seats*, the width of the *aisle* or *aisle accessway* shall be measured from the back of the seat.

1029.12.1.1 Aisle accessway capacity and width for seating at tables. *Aisle accessways* serving arrangements of seating at tables or counters shall comply with the capacity requirements of Section 1005.1 but shall not have less than 12 inches (305 mm) of width plus $^1/_2$ inch (12.7 mm) of width for each additional 1 foot (305 mm), or fraction thereof, beyond 12 feet (3658 mm) of *aisle accessway* length measured from the center of the seat farthest from an *aisle*.

Exception: Portions of an *aisle accessway* having a length not exceeding 6 feet (1829 mm) and used by a total of not more than four persons.

1029.12.1.2 Seating at table aisle accessway length. The length of travel along the *aisle accessway* shall not exceed 30 feet (9144 mm) from any seat to the point where a person has a choice of two or more paths of egress travel to separate *exits*.

1029.12.2 Clear width of aisle accessways serving seating in rows. Where seating rows have 14 or fewer seats, the minimum clear *aisle accessway* width shall be not less than 12 inches (305 mm) measured as the clear horizontal distance from the back of the row ahead and the nearest projection of the row behind. Where chairs have automatic or self-rising seats, the measurement shall be made with seats in the raised position. Where any chair in the row does not have an automatic or self-rising seat, the measurements shall be made with the seat in the down position. For seats with folding tablet arms, row spacing shall be determined with the tablet arm in the used position.

Exception: For seats with folding tablet arms, row spacing is permitted to be determined with the tablet

arm in the stored position where the tablet arm when raised manually to vertical position in one motion automatically returns to the stored position by force of gravity.

1029.12.2.1 Dual access. For rows of seating served by *aisles* or doorways at both ends, there shall be not more than 100 seats per row. The minimum clear width of 12 inches (305 mm) between rows shall be increased by 0.3 inch (7.6 mm) for every additional seat beyond 14 seats where seats have backrests or beyond 21 where seats are without backrests. The minimum clear width is not required to exceed 22 inches (559 mm).

Exception: For *smoke-protected assembly seating*, the row length limits for a 12-inch-wide (305 mm) *aisle accessway*, beyond which the *aisle accessway* minimum clear width shall be increased, are in Table 1029.12.2.1.

1029.12.2.2 Single access. For rows of seating served by an *aisle* or doorway at only one end of the row, the minimum clear width of 12 inches (305 mm) between rows shall be increased by 0.6 inch (15.2 mm) for every additional seat beyond seven seats where seats have backrests or beyond 10 where seats are without backrests. The minimum clear width is not required to exceed 22 inches (559 mm).

Exception: For *smoke-protected assembly seating*, the row length limits for a 12-inch-wide (305 mm) *aisle accessway*, beyond which the *aisle accessway* minimum clear width shall be increased, are in Table 1029.12.2.1.

1029.13 Assembly aisle walking surfaces. Ramped *aisles* shall comply with Sections 1029.13.1 through 1029.13.1.3. Stepped *aisles* shall comply with Sections 1029.13.2 through 1029.13.2.4.

1029.13.1 Ramped aisles. *Aisles* that are sloped more than one unit vertical in 20 units horizontal (5-percent slope) shall be considered a ramped *aisle*. Ramped *aisles* that serve as part of an *accessible route* in accordance with Sections 1009 and 1108.2 shall have a maximum slope of one unit vertical in 12 units horizontal (8-percent slope). The slope of other ramped *aisles* shall not exceed one unit vertical in 8 units horizontal (12.5-percent slope).

1029.13.1.1 Cross slope. The slope measured perpendicular to the direction of travel of a ramped *aisle* shall not be steeper than one unit vertical in 48 units horizontal (2-percent slope).

1029.13.1.2 Landings. Ramped *aisles* shall have landings in accordance with Sections 1012.6 through 1012.6.5. Landings for ramped *aisles* shall be permitted to overlap required *aisles* or cross *aisles*.

1029.13.1.3 Edge protection. Ramped *aisles* shall have edge protection in accordance with Section 1012.11.

Exception: In assembly spaces with *fixed seating*, edge protection is not required on the sides of ramped *aisles* where the ramped *aisles* provide access to the adjacent seating and *aisle accessways*.

1029.13.2 Stepped aisles. *Aisles* with a slope exceeding one unit vertical in eight units horizontal (12.5-percent slope) shall consist of a series of risers and treads that extends across the full width of *aisles* and complies with Sections 1029.13.2.1 through 1029.13.2.4.

1029.13.2.1 Treads. Tread depths shall be not less than 11 inches (279 mm) and shall have dimensional uniformity.

Exception: The tolerance between adjacent treads shall not exceed $^{3}/_{16}$ inch (4.8 mm).

1029.13.2.2 Risers. Where the gradient of stepped *aisles* is to be the same as the gradient of adjoining seating areas, the riser height shall be not less than 4 inches (102 mm) nor more than 8 inches (203 mm) and shall be uniform within each *flight*.

Exceptions:

1. Riser height nonuniformity shall be limited to the extent necessitated by changes in the gradient of the adjoining seating area to maintain adequate sightlines. Where nonuniformities

TABLE 1029.12.2.1
SMOKE-PROTECTED ASSEMBLY AISLE ACCESSWAYS

TOTAL NUMBER OF SEATS IN THE SMOKE-PROTECTED ASSEMBLY SEATING	MAXIMUM NUMBER OF SEATS PER ROW PERMITTED TO HAVE A MINIMUM 12-INCH CLEAR WIDTH AISLE ACCESSWAY			
	Aisle or doorway at both ends of row		Aisle or doorway at one end of row only	
	Seats with backrests	Seats without backrests	Seats with backrests	Seats without backrests
Less than 4,000	14	21	7	10
4,000	15	22	7	10
7,000	16	23	8	11
10,000	17	24	8	11
13,000	18	25	9	12
16,000	19	26	9	12
19,000	20	27	10	13
22,000 and greater	21	28	11	14

For SI: 1 inch = 25.4 mm.

exceed $^3/_{16}$ inch (4.8 mm) between adjacent risers, the exact location of such nonuniformities shall be indicated with a distinctive marking stripe on each tread at the *nosing* or leading edge adjacent to the nonuniform risers. Such stripe shall be not less than 1 inch (25 mm), and not more than 2 inches (51 mm), wide. The edge marking stripe shall be distinctively different from the contrasting marking stripe.

2. Riser heights not exceeding 9 inches (229 mm) shall be permitted where they are necessitated by the slope of the adjacent seating areas to maintain sightlines.

1029.13.2.2.1 Construction tolerances. The tolerance between adjacent risers on a stepped *aisle* that were designed to be equal height shall not exceed $^3/_{16}$ inch (4.8 mm). Where the stepped *aisle* is designed in accordance with Exception 1 of Section 1029.13.2.2, the stepped *aisle* shall be constructed so that each riser of unequal height, determined in the direction of descent, is not more than $^3/_8$ inch (9.5 mm) in height different from adjacent risers where stepped *aisle* treads are less than 22 inches (560 mm) in depth and $^3/_4$ inch (19.1 mm) in height different from adjacent risers where stepped *aisle* treads are 22 inches (560 mm) or greater in depth.

1029.13.2.3 Tread contrasting marking stripe. A contrasting marking stripe shall be provided on each tread at the *nosing* or leading edge such that the location of each tread is readily apparent when viewed in descent. Such stripe shall be not less than 1 inch (25 mm), and not more than 2 inches (51 mm), wide.

Exception: The contrasting marking stripe is permitted to be omitted where tread surfaces are such that the location of each tread is readily apparent when viewed in descent.

1029.13.2.4 Nosing and profile. *Nosing* and riser profile shall comply with Sections 1011.5.5 through 1011.5.5.3.

1029.14 Seat stability. In a building, room or space used for assembly purposes, the seats shall be securely fastened to the floor.

Exceptions:

1. In a building, room or space used for assembly purposes or portions thereof without ramped or tiered floors for seating and with 200 or fewer seats, the seats shall not be required to be fastened to the floor.
2. In a building, room or space used for assembly purposes or portions thereof without ramped or tiered floors for seating, the seats shall not be required to be fastened to the floor.
3. In a building, room or space used for assembly purposes or portions thereof without ramped or tiered floors for seating and with greater than 200 seats, the seats shall be fastened together in groups of not less than three or the seats shall be securely fastened to the floor.
4. In a building, room or space used for assembly purposes where flexibility of the seating arrangement is an integral part of the design and function of the space and seating is on tiered levels, not more than 200 seats shall not be required to be fastened to the floor. Plans showing seating, tiers and *aisles* shall be submitted for approval.
5. Groups of seats within a building, room or space used for assembly purposes separated from other seating by railings, *guards*, partial height walls or similar barriers with level floors and having not more than 14 seats per group shall not be required to be fastened to the floor.
6. Seats intended for musicians or other performers and separated by railings, *guards*, partial height walls or similar barriers shall not be required to be fastened to the floor.

1029.15 Handrails. Ramped *aisles* having a slope exceeding one unit vertical in 15 units horizontal (6.7-percent slope) and stepped *aisles* shall be provided with *handrails* in compliance with Section 1014 located either at one or both sides of the *aisle* or within the *aisle* width.

Exceptions:

1. *Handrails* are not required for ramped *aisles* with seating on both sides.
2. *Handrails* are not required where, at the side of the *aisle*, there is a *guard* with a top surface that complies with the graspability requirements of *handrails* in accordance with Section 1014.3.
3. *Handrail* extensions are not required at the top and bottom of stepped *aisles* and ramped *aisles* to permit crossovers within the *aisles*.

1029.15.1 Discontinuous handrails. Where there is seating on both sides of the *aisle*, the mid-aisle *handrails* shall be discontinuous with gaps or breaks at intervals not exceeding five rows to facilitate access to seating and to permit crossing from one side of the *aisle* to the other. These gaps or breaks shall have a clear width of not less than 22 inches (559 mm) and not greater than 36 inches (914 mm), measured horizontally, and the mid-aisle *handrail* shall have rounded terminations or bends.

1029.15.2 Handrail termination. *Handrails* located on the side of stepped *aisles* shall return to a wall, *guard* or the walking surface or shall be continuous to the *handrail* of an adjacent stepped *aisle flight*.

1029.15.3 Mid-aisle termination. Mid-aisle *handrails* shall not extend beyond the lowest riser and shall terminate within 18 inches (381 mm), measured horizontally, from the lowest riser. *Handrail* extensions are not required.

Exception: Mid-aisle *handrails* shall be permitted to extend beyond the lowest riser where the *handrail* extensions do not obstruct the width of the cross *aisle*.

1029.15.4 Rails. Where mid-aisle *handrails* are provided in stepped *aisles*, there shall be an additional rail located approximately 12 inches (305 mm) below the *handrail*. The rail shall be adequate in strength and attachment in accordance with Section 1607.8.1.2.

1029.16 Assembly guards. *Guards* adjacent to seating in a building, room or space used for assembly purposes shall be provided where required by Section 1015 and shall be constructed in accordance with Section 1015 except where provided in accordance with Sections 1029.16.1 through 1029.16.4. At *bleachers*, *grandstands* and *folding and telescopic seating*, *guards* must be provided where required by ICC 300 and Section 1029.16.1.

1029.16.1 Perimeter guards. Perimeter *guards* shall be provided where the footboards or walking surface of seating facilities are more than 30 inches (762 mm) above the floor or grade below. Where the seatboards are adjacent to the perimeter, *guard* height shall be 42 inches (1067 mm) high minimum, measured from the seatboard. Where the seats are self-rising, *guard* height shall be 42 inches (1067 mm) high minimum, measured from the floor surface. Where there is an *aisle* between the seating and the perimeter, the *guard* height shall be measured in accordance with Section 1015.2.

Exceptions:

1. *Guards* that impact sightlines shall be permitted to comply with Section 1029.16.3.
2. *Bleachers*, *grandstands* and *folding and telescopic seating* shall not be required to have perimeter *guards* where the seating is located adjacent to a wall and the space between the wall and the seating is less than 4 inches (102 mm).

1029.16.2 Cross aisles. Cross *aisles* located more than 30 inches (762 mm) above the floor or grade below shall have *guards* in accordance with Section 1015.

Where an elevation change of 30 inches (762 mm) or less occurs between a cross *aisle* and the adjacent floor or grade below, *guards* not less than 26 inches (660 mm) above the *aisle* floor shall be provided.

Exception: Where the backs of seats on the front of the cross *aisle* project 24 inches (610 mm) or more above the adjacent floor of the *aisle*, a *guard* need not be provided.

1029.16.3 Sightline-constrained guard heights. Unless subject to the requirements of Section 1029.16.4, a fascia or railing system in accordance with the *guard* requirements of Section 1015 and having a minimum height of 26 inches (660 mm) shall be provided where the floor or footboard elevation is more than 30 inches (762 mm) above the floor or grade below and the fascia or railing would otherwise interfere with the sightlines of immediately adjacent seating.

1029.16.4 Guards at the end of aisles. A fascia or railing system complying with the *guard* requirements of Section 1015 shall be provided for the full width of the *aisle* where the foot of the *aisle* is more than 30 inches (762 mm) above the floor or grade below. The fascia or railing shall be a minimum of 36 inches (914 mm) high and shall provide a minimum 42 inches (1067 mm) measured diagonally between the top of the rail and the *nosing* of the nearest tread.

SECTION 1030
EMERGENCY ESCAPE AND RESCUE

1030.1 General. In addition to the *means of egress* required by this chapter, provisions shall be made for *emergency escape and rescue openings* in Group R-2 occupancies in accordance with Tables 1006.3.2(1) and 1006.3.2(2) and Group R-3 occupancies. *Basements* and sleeping rooms below the fourth story above *grade plane* shall have at least one exterior *emergency escape and rescue opening* in accordance with this section. Where *basements* contain one or more sleeping rooms, *emergency escape and rescue openings* shall be required in each sleeping room, but shall not be required in adjoining areas of the *basement*. Such openings shall open directly into a *public way* or to a *yard* or *court* that opens to a *public way*.

Exceptions:

1. *Basements* with a ceiling height of less than 80 inches (2032 mm) shall not be required to have *emergency escape and rescue openings*.
2. *Emergency escape and rescue openings* are not required from *basements* or sleeping rooms that have an *exit* door or *exit access* door that opens directly into a *public way* or to a *yard*, *court* or exterior exit balcony that opens to a *public way*.
3. *Basements* without *habitable spaces* and having not more than 200 square feet (18.6 m^2) in floor area shall not be required to have *emergency escape and rescue openings*.

1030.2 Minimum size. *Emergency escape and rescue openings* shall have a minimum net clear opening of 5.7 square feet (0.53 m^2).

Exception: The minimum net clear opening for grade-floor *emergency escape and rescue openings* shall be 5 square feet (0.46 m^2).

1030.2.1 Minimum dimensions. The minimum net clear opening height dimension shall be 24 inches (610 mm). The minimum net clear opening width dimension shall be 20 inches (508 mm). The net clear opening dimensions shall be the result of normal operation of the opening.

1030.3 Maximum height from floor. *Emergency escape and rescue openings* shall have the bottom of the clear opening not greater than 44 inches (1118 mm) measured from the floor.

1030.4 Operational constraints. *Emergency escape and rescue openings* shall be operational from the inside of the room without the use of keys or tools. Bars, grilles, grates or similar devices are permitted to be placed over *emergency escape and rescue openings* provided the minimum net clear opening size complies with Section 1030.2 and such devices shall be releasable or removable from the inside without the use of a key, tool or force greater than that which is required for nor-

mal operation of the *emergency escape and rescue opening*. Where such bars, grilles, grates or similar devices are installed in existing buildings, *smoke alarms* shall be installed in accordance with Section 907.2.11 regardless of the valuation of the *alteration*.

1030.5 Window wells. An *emergency escape and rescue opening* with a finished sill height below the adjacent ground level shall be provided with a window well in accordance with Sections 1030.5.1 and 1030.5.2.

1030.5.1 Minimum size. The minimum horizontal area of the window well shall be 9 square feet (0.84 m^2), with a minimum dimension of 36 inches (914 mm). The area of the window well shall allow the *emergency escape and rescue opening* to be fully opened.

1030.5.2 Ladders or steps. Window wells with a vertical depth of more than 44 inches (1118 mm) shall be equipped with an *approved* permanently affixed ladder or steps. Ladders or rungs shall have an inside width of at least 12 inches (305 mm), shall project at least 3 inches (76 mm) from the wall and shall be spaced not more than 18 inches (457 mm) on center (o.c.) vertically for the full height of the window well. The ladder or steps shall not encroach into the required dimensions of the window well by more than 6 inches (152 mm). The ladder or steps shall not be obstructed by the *emergency escape and rescue opening*. Ladders or steps required by this section are exempt from the *stairway* requirements of Section 1011.

CHAPTER 11

ACCESSIBILITY

SECTION 1101
GENERAL

1101.1 Scope. The provisions of this chapter shall control the design and construction of facilities for accessibility for individuals with disabilities.

1101.2 Design. Buildings and facilities shall be designed and constructed to be *accessible* in accordance with this code and ICC A117.1.

SECTION 1102
DEFINITIONS

1102.1 Definitions. The following terms are defined in Chapter 2:

ACCESSIBLE.

ACCESSIBLE ROUTE.

ACCESSIBLE UNIT.

AREA OF SPORT ACTIVITY.

CIRCULATION PATH.

COMMON USE.

DETECTABLE WARNING.

EMPLOYEE WORK AREA.

FACILITY.

INTENDED TO BE OCCUPIED AS A RESIDENCE.

MULTILEVEL ASSEMBLY SEATING.

MULTISTORY UNIT.

PUBLIC ENTRANCE.

PUBLIC-USE AREAS.

RESTRICTED ENTRANCE.

SELF-SERVICE STORAGE FACILITY.

SERVICE ENTRANCE.

SITE.

TYPE A UNIT.

TYPE B UNIT.

WHEELCHAIR SPACE.

SECTION 1103
SCOPING REQUIREMENTS

1103.1 Where required. *Sites*, buildings, *structures*, *facilities*, elements and spaces, temporary or permanent, shall be *accessible* to individuals with disabilities.

1103.2 General exceptions. *Sites*, buildings, *structures*, *facilities*, elements and spaces shall be exempt from this chapter to the extent specified in this section.

1103.2.1 Specific requirements. *Accessibility* is not required in buildings and *facilities*, or portions thereof, to the extent permitted by Sections 1104 through 1111.

1103.2.2 Employee work areas. Spaces and elements within *employee work areas* shall only be required to comply with Sections 907.5.2.3.2, 1007 and 1104.3.1 and shall be designed and constructed so that individuals with disabilities can approach, enter and exit the work area. Work areas, or portions of work areas, other than raised courtroom stations in accordance with Section 1108.4.1.4, that are less than 300 square feet (30 m^2) in area and located 7 inches (178 mm) or more above or below the ground or finished floor where the change in elevation is essential to the function of the space shall be exempt from all requirements.

1103.2.3 Detached dwellings. Detached one- and two-family *dwellings*, their accessory structures and their associated *sites* and *facilities* are not required to comply with this chapter.

1103.2.4 Utility buildings. Group U occupancies are not required to comply with this chapter other than the following:

1. In agricultural buildings, access is required to paved work areas and areas open to the general public.
2. Private garages or carports that contain required *accessible* parking.

1103.2.5 Construction sites. Structures, *sites* and equipment directly associated with the actual processes of construction including, but not limited to, scaffolding, bridging, materials hoists, materials storage or construction trailers are not required to comply with this chapter.

1103.2.6 Raised areas. Raised areas used primarily for purposes of security, life safety or fire safety including, but not limited to, observation galleries, prison guard towers, fire towers or lifeguard stands are not required to comply with this chapter.

1103.2.7 Limited access spaces. Spaces accessed only by ladders, catwalks, crawl spaces, freight elevators or very narrow passageways are not required to comply with this chapter.

1103.2.8 Areas in places of religious worship. Raised or lowered areas, or portions of areas, in *places of religious worship* that are less than 300 square feet (30 m^2) in area and located 7 inches (178 mm) or more above or below the finished floor and used primarily for the performance of religious ceremonies are not required to comply with this chapter.

1103.2.9 Equipment spaces. Spaces frequented only by service personnel for maintenance, repair or occasional monitoring of equipment are not required to comply with this chapter.

1103.2.10 Highway tollbooths. Highway tollbooths where the access is provided only by bridges above the vehicular traffic or underground tunnels are not required to comply with this chapter.

1103.2.11 Residential Group R-1. Buildings of Group R-1 containing not more than five *sleeping units* for rent or hire that are also occupied as the residence of the proprietor are not required to comply with this chapter.

1103.2.12 Day care facilities. Where a day care facility is part of a *dwelling unit*, only the portion of the structure utilized for the day care facility is required to comply with this chapter.

1103.2.13 Detention and correctional facilities. In detention and correctional facilities, *common use* areas that are used only by inmates or detainees and security personnel, and that do not serve holding cells or housing cells required to be *Accessible units*, are not required to comply with this chapter.

1103.2.14 Walk-in coolers and freezers. Walk-in coolers and freezers intended for employee use only are not required to comply with this chapter.

SECTION 1104
ACCESSIBLE ROUTE

1104.1 Site arrival points. At least one *accessible route* within the *site* shall be provided from public transportation stops, *accessible* parking, *accessible* passenger loading zones, and public streets or sidewalks to the *accessible* building entrance served.

Exception: Other than in buildings or *facilities* containing or serving *Type B units*, an *accessible route* shall not be required between *site* arrival points and the building or *facility* entrance if the only means of access between them is a vehicular way not providing for pedestrian access.

1104.2 Within a site. At least one *accessible route* shall connect *accessible* buildings, *accessible* facilities, *accessible* elements and *accessible* spaces that are on the same *site*.

Exceptions:

1. An *accessible route* is not required between *accessible* buildings, *accessible* facilities, *accessible* elements and *accessible* spaces that have, as the only means of access between them, a vehicular way not providing for pedestrian access.
2. An *accessible route* to recreational facilities shall only be required to the extent specified in Section 1110.

1104.3 Connected spaces. When a building or portion of a building is required to be *accessible*, at least one *accessible route* shall be provided to each portion of the building, to *accessible* building entrances connecting *accessible* pedestrian walkways and to the *public way*.

Exceptions:

1. *Stories* and *mezzanines* exempted by Section 1104.4.
2. In a building, room or space used for assembly purposes with *fixed seating*, an *accessible route* shall not be required to serve levels where *wheelchair spaces* are not provided.
3. Vertical access to elevated employee work stations within a courtroom complying with Section 1108.4.1.4.
4. An *accessible route* to recreational facilities shall only be required to the extent specified in Section 1110.

1104.3.1 Employee work areas. *Common use circulation paths* within *employee work areas* shall be *accessible routes*.

Exceptions:

1. *Common use circulation paths*, located within *employee work areas* that are less than 1,000 square feet (93 m^2) in size and defined by permanently installed partitions, counters, casework or furnishings, shall not be required to be *accessible routes*.
2. *Common use circulation paths*, located within *employee work areas*, that are an integral component of equipment, shall not be required to be *accessible routes*.
3. *Common use circulation paths*, located within exterior *employee work areas* that are fully exposed to the weather, shall not be required to be *accessible routes*.

1104.3.2 Press boxes. Press boxes in a building, room or space used for assembly purposes shall be on an *accessible route*.

Exceptions:

1. An *accessible route* shall not be required to press boxes in *bleachers* that have a single point of entry from the *bleachers*, provided that the aggregate area of all press boxes for each playing field is not more than 500 square feet (46 m^2).
2. An *accessible route* shall not be required to free-standing press boxes that are more than 12 feet (3660 mm) above grade provided that the aggregate area of all press boxes for each playing field is not more than 500 square feet (46 m^2).

1104.4 Multistory buildings and facilities. At least one *accessible route* shall connect each *accessible story* and *mezzanine* in multilevel buildings and *facilities*.

Exceptions:

1. An *accessible route* is not required to *stories* and *mezzanines* that have an aggregate area of not more than 3,000 square feet (278.7 m^2) and are located above and below *accessible* levels. This exception shall not apply to:
   1.1. Multiple tenant facilities of Group M occupancies containing five or more tenant spaces used for the sales or rental of goods

and where at least one such tenant space is located on a floor level above or below the *accessible* levels;

1.2. *Stories* or *mezzanines* containing offices of health care providers (Group B or I);

1.3. Passenger transportation facilities and airports (Group A-3 or B); or

1.4. Government buildings.

2. *Stories* or *mezzanines* that do not contain *accessible* elements or other spaces as determined by Section 1107 or 1108 are not required to be served by an *accessible route* from an *accessible* level.

3. In air traffic control towers, an *accessible route* is not required to serve the cab and the floor immediately below the cab.

4. Where a two-story building or facility has one *story* or *mezzanine* with an *occupant load* of five or fewer persons that does not contain *public use* space, that *story* or *mezzanine* shall not be required to be connected by an *accessible route* to the *story* above or below.

1104.5 Location. *Accessible routes* shall coincide with or be located in the same area as a general *circulation path.* Where the *circulation path* is interior, the *accessible route* shall also be interior. Where only one *accessible route* is provided, the *accessible route* shall not pass through kitchens, storage rooms, restrooms, closets or similar spaces.

Exceptions:

1. *Accessible routes* from parking garages contained within and serving *Type B units* are not required to be interior.

2. A single *accessible route* is permitted to pass through a kitchen or storage room in an *Accessible unit, Type A unit* or *Type B unit.*

1104.6 Security barriers. Security barriers including, but not limited to, security bollards and security check points shall not obstruct a required *accessible route* or accessible *means of egress.*

Exception: Where security barriers incorporate elements that cannot comply with these requirements, such as certain metal detectors, fluoroscopes or other similar devices, the *accessible route* shall be permitted to be provided adjacent to security screening devices. The *accessible route* shall permit persons with disabilities passing around security barriers to maintain visual contact with their personal items to the same extent provided others passing through the security barrier.

SECTION 1105
ACCESSIBLE ENTRANCES

1105.1 Public entrances. In addition to *accessible* entrances required by Sections 1105.1.1 through 1105.1.7, at least 60 percent of all *public entrances* shall be *accessible.*

Exceptions:

1. An *accessible* entrance is not required to areas not required to be *accessible.*

2. Loading and *service entrances* that are not the only entrance to a tenant space.

1105.1.1 Parking garage entrances. Where provided, direct access for pedestrians from parking structures to buildings or facility entrances shall be *accessible.*

1105.1.2 Entrances from tunnels or elevated walkways. Where direct access is provided for pedestrians from a pedestrian tunnel or elevated walkway to a building or facility, at least one entrance to the building or facility from each tunnel or walkway shall be *accessible.*

1105.1.3 Restricted entrances. Where *restricted entrances* are provided to a building or facility, at least one *restricted entrance* to the building or facility shall be *accessible.*

1105.1.4 Entrances for inmates or detainees. Where entrances used only by inmates or detainees and security personnel are provided at judicial facilities, detention facilities or correctional facilities, at least one such entrance shall be *accessible.*

1105.1.5 Service entrances. If a *service entrance* is the only entrance to a building or a tenant space in a facility, that entrance shall be *accessible.*

1105.1.6 Tenant spaces. At least one *accessible* entrance shall be provided to each tenant in a facility.

Exception: An *accessible* entrance is not required to self-service storage facilities that are not required to be *accessible.*

1105.1.7 Dwelling units and sleeping units. At least one *accessible* entrance shall be provided to each *dwelling unit* and *sleeping unit* in a facility.

Exception: An *accessible* entrance is not required to *dwelling units* and *sleeping units* that are not required to be *Accessible units, Type A units* or *Type B units.*

SECTION 1106
PARKING AND PASSENGER LOADING FACILITIES

1106.1 Required. Where parking is provided, *accessible* parking spaces shall be provided in compliance with Table 1106.1, except as required by Sections 1106.2 through

1106.4. Where more than one parking facility is provided on a *site*, the number of parking spaces required to be *accessible* shall be calculated separately for each parking facility.

Exception: This section does not apply to parking spaces used exclusively for buses, trucks, other delivery vehicles, law enforcement vehicles or vehicular impound and motor pools where lots accessed by the public are provided with an *accessible* passenger loading zone.

TABLE 1106.1
ACCESSIBLE PARKING SPACES

TOTAL PARKING SPACES PROVIDED IN PARKING FACILITIES	REQUIRED MINIMUM NUMBER OF ACCESSIBLE SPACES
1 to 25	1
26 to 50	2
51 to 75	3
76 to 100	4
101 to 150	5
151 to 200	6
201 to 300	7
301 to 400	8
401 to 500	9
501 to 1,000	2% of total
1,001 and over	20, plus one for each 100, or fraction thereof, over 1,000

1106.2 Groups I-1, R-1, R-2, R-3 and R-4. *Accessible* parking spaces shall be provided in Group I-1, R-1, R-2, R-3 and R-4 occupancies in accordance with Items 1 through 4 as applicable.

1. In Group R-2, R-3 and R-4 occupancies that are required to have *Accessible*, *Type A* or *Type B dwelling units* or *sleeping units*, at least 2 percent, but not less than one, of each type of parking space provided shall be *accessible*.
2. In Group I-1 and R-1 occupancies, *accessible* parking shall be provided in accordance with Table 1106.1.
3. Where at least one parking space is provided for each *dwelling unit* or *sleeping unit*, at least one *accessible* parking space shall be provided for each *Accessible* and *Type A unit*.
4. Where parking is provided within or beneath a building, *accessible* parking spaces shall also be provided within or beneath the building.

1106.3 Hospital outpatient facilities. At least 10 percent, but not less than one, of care recipient and visitor parking spaces provided to serve hospital outpatient facilities shall be *accessible*.

1106.4 Rehabilitation facilities and outpatient physical therapy facilities. At least 20 percent, but not less than one, of the portion of care recipient and visitor parking spaces serving rehabilitation facilities specializing in treating conditions that affect mobility and outpatient physical therapy facilities shall be *accessible*.

1106.5 Van spaces. For every six or fraction of six *accessible* parking spaces, at least one shall be a van-accessible parking space.

Exception: In Group R-2 and R-3 occupancies, van-accessible spaces located within private garages shall be permitted to have vehicular routes, entrances, parking spaces and access aisles with a minimum vertical clearance of 7 feet (2134 mm).

1106.6 Location. *Accessible* parking spaces shall be located on the shortest *accessible route* of travel from adjacent parking to an *accessible* building entrance. In parking facilities that do not serve a particular building, *accessible* parking spaces shall be located on the shortest route to an *accessible* pedestrian entrance to the parking facility. Where buildings have multiple *accessible* entrances with adjacent parking, *accessible* parking spaces shall be dispersed and located near the *accessible* entrances.

Exceptions:

1. In multilevel parking structures, van-accessible parking spaces are permitted on one level.
2. *Accessible* parking spaces shall be permitted to be located in different parking facilities if substantially equivalent or greater accessibility is provided in terms of distance from an *accessible* entrance or entrances, parking fee and user convenience.

1106.7 Passenger loading zones. Passenger loading zones shall be *accessible*.

1106.7.1 Continuous loading zones. Where passenger loading zones are provided, one passenger loading zone in every continuous 100 linear feet (30.4 m) maximum of loading zone space shall be *accessible*.

1106.7.2 Medical facilities. A passenger loading zone shall be provided at an *accessible* entrance to licensed medical and long-term care facilities where people receive physical or medical treatment or care and where the period of stay exceeds 24 hours.

1106.7.3 Valet parking. A passenger loading zone shall be provided at valet parking services.

1106.7.4 Mechanical access parking garages. Mechanical access parking garages shall provide at least one passenger loading zone at vehicle drop-off and vehicle pick-up areas.

SECTION 1107
DWELLING UNITS AND SLEEPING UNITS

1107.1 General. In addition to the other requirements of this chapter, occupancies having *dwelling units* or *sleeping units* shall be provided with *accessible* features in accordance with this section.

1107.2 Design. *Dwelling units* and *sleeping units* that are required to be *Accessible units*, *Type A units* and *Type B units* shall comply with the applicable portions of Chapter 10 of ICC A117.1. Units required to be *Type A units* are permitted to be designed and constructed as *Accessible units*. Units

required to be *Type B units* are permitted to be designed and constructed as *Accessible units* or as *Type A units*.

1107.3 Accessible spaces. Rooms and spaces available to the general public or available for use by residents and serving *Accessible units*, *Type A units* or *Type B units* shall be *accessible*. *Accessible* spaces shall include toilet and bathing rooms, kitchen, living and dining areas and any exterior spaces, including patios, terraces and balconies.

Exceptions:

1. *Stories* and *mezzanines* exempted by Section 1107.4.
2. Recreational facilities in accordance with Section 1110.2.
3. Exterior decks, patios or balconies that are part of *Type B units* and have impervious surfaces, and that are not more than 4 inches (102 mm) below the finished floor level of the adjacent interior space of the unit.

1107.4 Accessible route. At least one *accessible route* shall connect *accessible* building or facility entrances with the primary entrance of each *Accessible unit*, *Type A unit* and *Type B unit* within the building or facility and with those exterior and interior spaces and facilities that serve the units.

Exceptions:

1. If due to circumstances outside the control of the owner, either the slope of the finished ground level between *accessible* facilities and buildings exceeds one unit vertical in 12 units horizontal (1:12), or where physical barriers or legal restrictions prevent the installation of an *accessible route*, a vehicular route with parking that complies with Section 1106 at each *public* or *common use* facility or building is permitted in place of the *accessible route*.
2. In Group I-3 facilities, an *accessible route* is not required to connect *stories* or *mezzanines* where *Accessible units*, all *common use* areas serving *Accessible units* and all *public use* areas are on an *accessible* route.
3. In Group R-2 facilities with *Type A units* complying with Section 1107.6.2.2.1, an *accessible route* is not required to connect *stories* or *mezzanines* where *Type A units*, all *common use* areas serving *Type A units* and all public use areas are on an *accessible route*.
4. In other than Group R-2 dormitory housing provided by places of education, in Group R-2 facilities with *Accessible units* complying with Section 1107.6.2.3.1, an *accessible route* is not required to connect *stories* or *mezzanines* where *Accessible units*, all *common use* areas serving *Accessible units* and all *public use* areas are on an *accessible* route.
5. In Group R-1, an *accessible route* is not required to connect *stories* or *mezzanines* within individual units, provided the *accessible* level meets the provisions for *Accessible units* and sleeping accommodations for two persons minimum and a toilet facility are provided on that level.
6. In congregate residences in Groups R-3 and R-4, an *accessible route* is not required to connect *stories* or *mezzanines* where *Accessible units* or *Type B units*, all *common use* areas serving *Accessible units* and *Type B units* and all *public use* areas serving *Accessible units* and *Type B units* are on an *accessible route*.
7. An *accessible route* between *stories* is not required where *Type B units* are exempted by Section 1107.7.

1107.5 Group I. *Accessible units* and *Type B units* shall be provided in Group I occupancies in accordance with Sections 1107.5.1 through 1107.5.5.

1107.5.1 Group I-1. *Accessible units* and *Type B units* shall be provided in Group I-1 occupancies in accordance with Sections 1107.5.1.1 and 1107.5.1.2.

1107.5.1.1 Accessible units. In Group I-1 Condition 1, at least 4 percent, but not less than one, of the *dwelling units* and *sleeping units* shall be *Accessible units*. In Group I-1 Condition 2, at least 10 percent, but not less than one, of the *dwelling units* and *sleeping units* shall be *Accessible units*.

1107.5.1.2 Type B units. In structures with four or more *dwelling units* or *sleeping units intended to be occupied as a residence*, every *dwelling unit* and *sleeping unit intended to be occupied as a residence* shall be a *Type B unit*.

Exception: The number of *Type B units* is permitted to be reduced in accordance with Section 1107.7.

1107.5.2 Group I-2 nursing homes. *Accessible units* and *Type B units* shall be provided in nursing homes of Group I-2 occupancies in accordance with Sections 1107.5.2.1 and 1107.5.2.2.

1107.5.2.1 Accessible units. At least 50 percent but not less than one of each type of the *dwelling units* and *sleeping units* shall be *Accessible units*.

1107.5.2.2 Type B units. In structures with four or more *dwelling units* or *sleeping units intended to be occupied as a residence*, every *dwelling unit* and *sleeping unit intended to be occupied as a residence* shall be a *Type B unit*.

Exception: The number of *Type B units* is permitted to be reduced in accordance with Section 1107.7.

1107.5.3 Group I-2 hospitals. *Accessible units* and *Type B units* shall be provided in general-purpose hospitals, psychiatric facilities and detoxification facilities of Group I-2 occupancies in accordance with Sections 1107.5.3.1 and 1107.5.3.2.

1107.5.3.1 Accessible units. At least 10 percent, but not less than one, of the *dwelling units* and *sleeping units* shall be *Accessible units.*

Exception: Entry doors to *Accessible dwelling units* or *sleeping units* shall not be required to provide the maneuvering clearance beyond the latch side of the door.

1107.5.3.2 Type B units. In structures with four or more *dwelling units* or *sleeping units intended to be occupied as a residence*, every *dwelling unit* and *sleeping unit intended to be occupied as a residence* shall be a *Type B unit.*

Exception: The number of *Type B units* is permitted to be reduced in accordance with Section 1107.7.

1107.5.4 Group I-2 rehabilitation facilities. In hospitals and rehabilitation facilities of Group I-2 occupancies that specialize in treating conditions that affect mobility, or units within either that specialize in treating conditions that affect mobility, 100 percent of the *dwelling units* and *sleeping units* shall be *Accessible units.*

1107.5.5 Group I-3. *Accessible units* shall be provided in Group I-3 occupancies in accordance with Sections 1107.5.5.1 through 1107.5.5.3.

1107.5.5.1 Group I-3 sleeping units. In Group I-3 occupancies, at least 3 percent of the total number of *sleeping units* in the facility, but not less than one unit in each classification level, shall be *Accessible units.*

1107.5.5.2 Special holding cells and special housing cells or rooms. In addition to the *Accessible units* required by Section 1107.5.5.1, where special holding cells or special housing cells or rooms are provided, at least one serving each purpose shall be an *Accessible unit.* Cells or rooms subject to this requirement include, but are not limited to, those used for purposes of orientation, protective custody, administrative or disciplinary detention or segregation, detoxification and medical isolation.

Exception: Cells or rooms specially designed without protrusions and that are used solely for purposes of suicide prevention shall not be required to include grab bars.

1107.5.5.3 Medical care facilities. Patient *sleeping units* or cells required to be *Accessible units* in medical care facilities shall be provided in addition to any medical isolation cells required to comply with Section 1107.5.5.2.

1107.6 Group R. *Accessible units*, *Type A units* and *Type B units* shall be provided in Group R occupancies in accordance with Sections 1107.6.1 through 1107.6.4.

1107.6.1 Group R-1. *Accessible units* and *Type B units* shall be provided in Group R-1 occupancies in accordance with Sections 1107.6.1.1 and 1107.6.1.2.

1107.6.1.1 Accessible units. *Accessible dwelling units* and *sleeping units* shall be provided in accordance with Table 1107.6.1.1. Where buildings contain more than 50 *dwelling units* or *sleeping units*, the number of *Accessible units* shall be determined per building. Where buildings contain 50 or fewer *dwelling units* or *sleeping units*, all *dwelling units* and *sleeping units* on a *site* shall be considered to determine the total number of *Accessible units. Accessible units* shall be dispersed among the various classes of units.

1107.6.1.2 Type B units. In structures with four or more *dwelling units* or *sleeping units intended to be occupied as a residence*, every *dwelling unit* and *sleeping unit intended to be occupied as a residence* shall be a *Type B unit.*

Exception: The number of *Type B units* is permitted to be reduced in accordance with Section 1107.7.

TABLE 1107.6.1.1
ACCESSIBLE DWELLING UNITS AND SLEEPING UNITS

TOTAL NUMBER OF UNITS PROVIDED	MINIMUM REQUIRED NUMBER OF ACCESSIBLE UNITS WITHOUT ROLL-IN SHOWERS	MINIMUM REQUIRED NUMBER OF ACCESSIBLE UNITS WITH ROLL-IN SHOWERS	TOTAL NUMBER OF REQUIRED ACCESSIBLE UNITS
1 to 25	1	0	1
26 to 50	2	0	2
51 to 75	3	1	4
76 to 100	4	1	5
101 to 150	5	2	7
151 to 200	6	2	8
201 to 300	7	3	10
301 to 400	8	4	12
401 to 500	9	4	13
501 to 1,000	2% of total	1% of total	3% of total
Over 1,000	20, plus 1 for each 100, or fraction thereof, over 1,000	10 plus 1 for each 100, or fraction thereof, over 1,000	30 plus 2 for each 100, or fraction thereof, over 1,000

1107.6.2 Group R-2. *Accessible units*, *Type A units* and *Type B units* shall be provided in Group R-2 occupancies in accordance with Sections 1107.6.2.1 through 1107.6.2.3.

1107.6.2.1 Live/work units. In *live/work units* constructed in accordance with Section 419, the nonresidential portion is required to be *accessible*. In a structure where there are four or more *live/work units intended to be occupied as a residence*, the residential portion of the *live/work unit* shall be a *Type B unit*.

Exception: The number of *Type B units* is permitted to be reduced in accordance with Section 1107.7.

1107.6.2.2 Apartment houses, monasteries and convents. *Type A units* and *Type B units* shall be provided in apartment houses, monasteries and convents in accordance with Sections 1107.6.2.2.1 and 1107.6.2.2.2.

1107.6.2.2.1 Type A units. In Group R-2 occupancies containing more than 20 *dwelling units* or *sleeping units*, at least 2 percent but not less than one of the units shall be a *Type A unit*. All Group R-2 units on a *site* shall be considered to determine the total number of units and the required number of *Type A units*. *Type A units* shall be dispersed among the various classes of units. Bedrooms in monasteries and convents shall be counted as *sleeping units* for the purpose of determining the number of units. Where the *sleeping units* are grouped into suites, only one *sleeping unit* in each suite shall count towards the number of required *Type A units*.

Exceptions:

1. The number of *Type A units* is permitted to be reduced in accordance with Section 1107.7.
2. *Existing structures* on a *site* shall not contribute to the total number of units on a *site*.

1107.6.2.2.2 Type B units. Where there are four or more *dwelling units* or *sleeping units intended to be occupied as a residence* in a single structure, every *dwelling unit* and *sleeping unit intended to be occupied as a residence* shall be a *Type B unit*.

Exception: The number of *Type B units* is permitted to be reduced in accordance with Section 1107.7.

1107.6.2.3 Group R-2 other than live/work units, apartment houses, monasteries and convents. In Group R-2 occupancies, other than *live/work units*, apartment houses, monasteries and convents falling within the scope of Sections 1107.6.2.1 and 1107.6.2.2, *Accessible units* and *Type B units* shall be provided in accordance with Sections 1107.6.2.3.1 and 1107.6.2.3.2. Bedrooms within congregate living facilities shall be counted as *sleeping units* for the purpose of determining the number of units. Where the *sleeping units* are grouped into suites, only one *sleeping unit* in each suite shall be permitted to count towards the number of required *Accessible units*.

1107.6.2.3.1 Accessible units. *Accessible dwelling units* and *sleeping units* shall be provided in accordance with Table 1107.6.1.1.

1107.6.2.3.2 Type B units. Where there are four or more *dwelling units* or *sleeping units intended to be occupied as a residence* in a single structure, every *dwelling unit* and every *sleeping unit intended to be occupied as a residence* shall be a *Type B unit*.

Exception: The number of *Type B units* is permitted to be reduced in accordance with Section 1107.7.

1107.6.3 Group R-3. In Group R-3 occupancies where there are four or more *dwelling units* or *sleeping units intended to be occupied as a residence* in a single structure, every *dwelling unit* and *sleeping unit intended to be occupied as a residence* shall be a *Type B unit*. Bedrooms within congregate living facilities shall be counted as *sleeping units* for the purpose of determining the number of units.

Exception: The number of *Type B units* is permitted to be reduced in accordance with Section 1107.7.

1107.6.4 Group R-4. *Accessible units* and *Type B units* shall be provided in Group R-4 occupancies in accordance with Sections 1107.6.4.1 and 1107.6.4.2.

1107.6.4.1 Accessible units. In Group R-4 Condition 1, at least one of the *dwelling units* or *sleeping units* shall be an *Accessible unit*. In Group R-4 Condition 2, at least two of the *dwelling units* or *sleeping units* shall be an *Accessible unit*. Bedrooms in Group R-4 facilities shall be counted as *sleeping units* for the purpose of determining the number of units.

1107.6.4.2 Type B units. In structures with four or more *dwelling units* or *sleeping units intended to be occupied as a residence*, every *dwelling unit* and *sleeping unit intended to be occupied as a residence* shall be a *Type B unit*.

Exception: The number of *Type B units* is permitted to be reduced in accordance with Section 1107.7.

1107.7 General exceptions. Where specifically permitted by Section 1107.5 or 1107.6, the required number of *Type A units* and *Type B units* is permitted to be reduced in accordance with Sections 1107.7.1 through 1107.7.5.

1107.7.1 Structures without elevator service. Where no elevator service is provided in a structure, only the *dwelling units* and *sleeping units* that are located on stories indicated in Sections 1107.7.1.1 and 1107.7.1.2 are required to be *Type A units* and *Type B units*, respectively. The number of *Type A units* shall be determined in accordance with Section 1107.6.2.2.1.

1107.7.1.1 One story with Type B units required. At least one *story* containing *dwelling units* or *sleeping units intended to be occupied as a residence* shall be provided with an *accessible* entrance from the exterior of the structure and all units *intended to be occupied as a residence* on that *story* shall be *Type B units*.

1107.7.1.2 Additional stories with Type B units. On all other stories that have a building entrance in proximity to arrival points intended to serve units on that *story*, as indicated in Items 1 and 2, all *dwelling units* and *sleeping units intended to be occupied as a residence* served by that entrance on that *story* shall be *Type B units*.

1. Where the slopes of the undisturbed *site* measured between the planned entrance and all vehicular or pedestrian arrival points within 50 feet (15 240 mm) of the planned entrance are 10 percent or less, and
2. Where the slopes of the planned finished grade measured between the entrance and all vehicular or pedestrian arrival points within 50 feet (15 240 mm) of the planned entrance are 10 percent or less.

Where no such arrival points are within 50 feet (15 240 mm) of the entrance, the closest arrival point shall be used unless that arrival point serves the *story* required by Section 1107.7.1.1.

1107.7.2 Multistory units. A *multistory dwelling unit* or *sleeping unit* that is not provided with elevator service is not required to be a *Type B unit*. Where a *multistory unit* is provided with external elevator service to only one floor, the floor provided with elevator service shall be the primary entry to the unit, shall comply with the requirements for a *Type B unit* and, where provided within the unit, a living area, a kitchen and a toilet facility shall be provided on that floor.

1107.7.3 Elevator service to the lowest story with units. Where elevator service in the building provides an *accessible route* only to the lowest *story* containing *dwelling units* or *sleeping units intended to be occupied as a residence*, only the units on that *story* that are *intended to be occupied as a residence* are required to be *Type B units*.

1107.7.4 Site impracticality. On a *site* with multiple nonelevator buildings, the number of units required by Section 1107.7.1 to be *Type B units* is permitted to be reduced to a percentage that is equal to the percentage of the entire *site* having grades, prior to development, that are less than 10 percent, provided that all of the following conditions are met:

1. Not less than 20 percent of the units required by Section 1107.7.1 on the *site* are *Type B units*;
2. Units required by Section 1107.7.1, where the slope between the building entrance serving the units on that *story* and a pedestrian or vehicular arrival point is no greater than 8.33 percent, are *Type B units*;
3. Units required by Section 1107.7.1, where an elevated walkway is planned between a building entrance serving the units on that *story* and a pedestrian or vehicular arrival point and the slope between them is 10 percent or less, are *Type B units*; and
4. Units served by an elevator in accordance with Section 1107.7.3 are *Type B units*.

1107.7.5 Design flood elevation. The required number of *Type A units* and *Type B units* shall not apply to a *site* where the required elevation of the lowest floor or the lowest horizontal structural building members of nonelevator buildings are at or above the *design flood elevation* resulting in:

1. A difference in elevation between the minimum required floor elevation at the primary entrances and vehicular and pedestrian arrival points within 50 feet (15 240 mm) exceeding 30 inches (762 mm), and
2. A slope exceeding 10 percent between the minimum required floor elevation at the primary entrances and vehicular and pedestrian arrival points within 50 feet (15 240 mm).

Where no such arrival points are within 50 feet (15 240 mm) of the primary entrances, the closest arrival points shall be used.

SECTION 1108
SPECIAL OCCUPANCIES

1108.1 General. In addition to the other requirements of this chapter, the requirements of Sections 1108.2 through 1108.4 shall apply to specific occupancies.

1108.2 Assembly area seating. A building, room or space used for assembly purposes with *fixed seating* shall comply with Sections 1108.2.1 through 1108.2.5. Lawn seating shall comply with Section 1108.2.6. Assistive listening systems shall comply with Section 1108.2.7. Performance areas viewed from assembly seating areas shall comply with Section 1108.2.8. Dining areas shall comply with Section 1108.2.9.

1108.2.1 Services. If a service or facility is provided in an area that is not *accessible*, the same service or facility shall be provided on an *accessible* level and shall be *accessible*.

1108.2.2 Wheelchair spaces. In rooms and spaces used for assembly purposes with *fixed seating*, *accessible wheelchair spaces* shall be provided in accordance with Sections 1108.2.2.1 through 1108.2.2.3.

1108.2.2.1 General seating. *Wheelchair spaces* shall be provided in accordance with Table 1108.2.2.1.

TABLE 1108.2.2.1
ACCESSIBLE WHEELCHAIR SPACES

CAPACITY OF SEATING IN ASSEMBLY AREAS	MINIMUM REQUIRED NUMBER OF WHEELCHAIR SPACES
4 to 25	1
26 to 50	2
51 to 100	4
101 to 300	5
301 to 500	6
501 to 5,000	6, plus 1 for each 150, or fraction thereof, between 501 through 5,000
5,001 and over	36 plus 1 for each 200, or fraction thereof, over 5,000

1108.2.2.2 Luxury boxes, club boxes and suites. In each luxury box, club box and suite within arenas, stadiums and *grandstands*, *wheelchair spaces* shall be provided in accordance with Table 1108.2.2.1.

1108.2.2.3 Other boxes. In boxes other than those required to comply with Section 1108.2.2.2, the total number of *wheelchair spaces* provided shall be determined in accordance with Table 1108.2.2.1. *Wheelchair spaces* shall be located in not less than 20 percent of all boxes provided.

1108.2.3 Companion seats. At least one companion seat shall be provided for each *wheelchair space* required by Sections 1108.2.2.1 through 1108.2.2.3.

1108.2.4 Dispersion of wheelchair spaces in multilevel assembly seating areas. In *multilevel assembly seating* areas, *wheelchair spaces* shall be provided on the main floor level and on one of each two additional floor or *mezzanine* levels. *Wheelchair spaces* shall be provided in each luxury box, club box and suite within assembly facilities.

Exceptions:

1. In *multilevel assembly seating* areas utilized for worship services where the second floor or *mezzanine* level contains 25 percent or less of the total seating capacity, *wheelchair spaces* shall be permitted to all be located on the main level.
2. In *multilevel assembly seating* areas where the second floor or *mezzanine* level provides 25 percent or less of the total seating capacity and 300 or fewer seats, all *wheelchair spaces* shall be permitted to be located on the main level.
3. *Wheelchair spaces* in team or player seating serving areas of sport activity are not required to be dispersed.

1108.2.5 Designated aisle seats. At least 5 percent, but not less than one, of the total number of aisle seats provided shall be designated aisle seats and shall be the aisle seats located closest to *accessible routes*.

Exception: Designated aisle seats are not required in team or player seating serving *areas of sport activity*.

1108.2.6 Lawn seating. Lawn seating areas and exterior overflow seating areas, where fixed seats are not provided, shall connect to an *accessible route*.

1108.2.7 Assistive listening systems. Each building, room or space used for assembly purposes where audible communications are integral to the use of the space shall have an assistive listening system.

Exception: Other than in courtrooms, an assistive listening system is not required where there is no audio amplification system.

1108.2.7.1 Receivers. The number and type of receivers shall be provided for assistive listening systems in accordance with Table 1108.2.7.1.

Exceptions:

1. Where a building contains more than one room or space used for assembly purposes, the total number of required receivers shall be permitted to be calculated based on the total number of seats in the building, provided that all receivers are usable with all systems and if the rooms or spaces used for assembly purposes required to provide assistive listening are under one management.
2. Where all seats in a building, room or space used for assembly purposes are served by an induction loop assistive listening system, the minimum number of receivers required by Table 1108.2.7.1 to be hearing-aid compatible shall not be required.

TABLE 1108.2.7.1
RECEIVERS FOR ASSISTIVE LISTENING SYSTEMS

CAPACITY OF SEATING IN ASSEMBLY AREAS	MINIMUM REQUIRED NUMBER OF RECEIVERS	MINIMUM NUMBER OF RECEIVERS TO BE HEARING-AID COMPATIBLE
50 or less	2	2
51 to 200	2, plus 1 per 25 seats over 50 seats*	2
201 to 500	2, plus 1 per 25 seats over 50 seats*	1 per 4 receivers*
501 to 1,000	20, plus 1 per 33 seats over 500 seats*	1 per 4 receivers*
1,001 to 2,000	35, plus 1 per 50 seats over 1,000 seats*	1 per 4 receivers*
Over 2,000	55, plus 1 per 100 seats over 2,000 seats*	1 per 4 receivers*

Note: * = or fraction thereof

1108.2.7.2 Ticket windows. Where ticket windows are provided in stadiums and arenas, at least one window at each location shall have an assistive listening system.

1108.2.7.3 Public address systems. Where stadiums, arenas and *grandstands* have 15,000 fixed seats or more and provide audible public announcements, they shall also provide prerecorded or real-time captions of those audible public announcements.

1108.2.8 Performance areas. An *accessible route* shall directly connect the performance area to the assembly seating area where a *circulation path* directly connects a performance area to an assembly seating area. An *accessible route* shall be provided from performance areas to ancillary areas or facilities used by performers.

1108.2.9 Dining and drinking areas. In dining and drinking areas, all interior and exterior floor areas shall be *accessible* and be on an *accessible route*.

Exceptions:

1. An *accessible route* between *accessible* levels and stories above or below is not required where permitted by Section 1104.4, Exception 1.
2. An *accessible route* to dining and drinking areas in a *mezzanine* is not required, provided that the *mezzanine* contains less than 25 percent of the total combined area for dining and drinking and the same services, and decor are provided in the *accessible* area.
3. In sports facilities, tiered dining areas providing seating required to be *accessible* shall be required to have *accessible routes* serving at least 25 percent of the dining area, provided that *accessible routes* serve *accessible* seating and where each tier is provided with the same services.
4. Employee-only work areas shall comply with Sections 1103.2.2 and 1104.3.1.

1108.2.9.1 Dining surfaces. Where dining surfaces for the consumption of food or drink are provided, at least 5 percent, but not less than one, of the dining surfaces for the seating and standing spaces shall be *accessible* and be distributed throughout the facility and located on a level accessed by an *accessible route*.

1108.3 Self-service storage facilities. *Self-service storage facilities* shall provide *accessible* individual self-storage spaces in accordance with Table 1108.3.

TABLE 1108.3
ACCESSIBLE SELF-SERVICE STORAGE FACILITIES

TOTAL SPACES IN FACILITY	MINIMUM NUMBER OF REQUIRED ACCESSIBLE SPACES
1 to 200	5%, but not less than 1
Over 200	10, plus 2% of total number of units over 200

1108.3.1 Dispersion. *Accessible* individual self-service storage spaces shall be dispersed throughout the various classes of spaces provided. Where more classes of spaces are provided than the number of required *accessible* spaces, the number of *accessible* spaces shall not be required to exceed that required by Table 1108.3. *Accessible* spaces are permitted to be dispersed in a single building of a multibuilding facility.

1108.4 Judicial facilities. Judicial facilities shall comply with Sections 1108.4.1 and 1108.4.2.

1108.4.1 Courtrooms. Each courtroom shall be *accessible* and comply with Sections 1108.4.1.1 through 1108.4.1.5.

1108.4.1.1 Jury box. A *wheelchair space* shall be provided within the jury box.

Exception: Adjacent companion seating is not required.

1108.4.1.2 Gallery seating. *Wheelchair spaces* shall be provided in accordance with Table 1108.2.2.1. Designated aisle seats shall be provided in accordance with Section 1108.2.5.

1108.4.1.3 Assistive listening systems. An assistive listening system must be provided. Receivers shall be provided for the assistive listening system in accordance with Section 1108.2.7.1.

1108.4.1.4 Employee work stations. The judge's bench, clerk's station, bailiff's station, deputy clerk's station and court reporter's station shall be located on an accessible route. The vertical access to elevated employee work stations within a courtroom is not required at the time of initial construction, provided a *ramp*, lift or elevator can be installed without requiring reconfiguration or extension of the courtroom or extension of the electrical system.

1108.4.1.5 Other work stations. The litigant's and counsel stations, including the lectern, shall be *accessible*.

1108.4.2 Holding cells. Central holding cells and court-floor holding cells shall comply with Sections 1108.4.2.1 and 1108.4.2.2.

1108.4.2.1 Central holding cells. Where separate central holding cells are provided for adult males, juvenile males, adult females or juvenile females, one of each type shall be *accessible*. Where central holding cells are provided and are not separated by age or sex, at least one *accessible* cell shall be provided.

1108.4.2.2 Court-floor holding cells. Where separate court-floor holding cells are provided for adult males, juvenile males, adult females or juvenile females, each courtroom shall be served by one *accessible* cell of each type. Where court-floor holding cells are provided and are not separated by age or sex, courtrooms shall be served by at least one *accessible* cell. *Accessible* cells shall be permitted to serve more than one courtroom.

*

SECTION 1109
OTHER FEATURES AND FACILITIES

1109.1 General. *Accessible* building features and facilities shall be provided in accordance with Sections 1109.2 through 1109.15.

Exception: *Accessible units*, *Type A units* and *Type B units* shall comply with Chapter 10 of ICC A117.1.

1109.2 Toilet and bathing facilities. Each toilet room and bathing room shall be *accessible*. Where a floor level is not required to be connected by an *accessible route*, the only toilet rooms or bathing rooms provided within the facility shall not be located on the inaccessible floor. Except as provided for in Sections 1109.2.2 and 1109.2.3, at least one of each type of fixture, element, control or dispenser in each accessible toilet room and bathing room shall be *accessible*.

Exceptions:

1. Toilet rooms or bathing rooms accessed only through a private office, not for *common* or *public use* and intended for use by a single occupant, shall be permitted to comply with the specific exceptions in ICC A117.1.
2. This section is not applicable to toilet and bathing rooms that serve *dwelling units* or *sleeping units* that are not required to be *accessible* by Section 1107.
3. Where multiple single-user toilet rooms or bathing rooms are clustered at a single location, at least 50 percent but not less than one room for each use at each cluster shall be *accessible*.
4. Where no more than one urinal is provided in a toilet room or bathing room, the urinal is not required to be *accessible*.
5. Toilet rooms or bathing rooms that are part of critical care or intensive care patient sleeping rooms serving *Accessible units* are not required to be *accessible*.
6. Toilet rooms or bathing rooms designed for bariatrics patients are not required to comply with the toilet room and bathing room requirement in ICC A117.1. The *sleeping units* served by bariatrics toilet or bathing rooms shall not count toward the required number of *Accessible sleeping units*.
7. Where toilet facilities are primarily for children's use, required *accessible* water closets, toilet compartments and lavatories shall be permitted to comply with children's provision of ICC A117.1.

1109.2.1 Family or assisted-use toilet and bathing rooms. In assembly and mercantile occupancies, an *accessible* family or assisted-use toilet room shall be provided where an aggregate of six or more male and female water closets is required. In buildings of mixed occupancy, only those water closets required for the assembly or mercantile occupancy shall be used to determine the family or assisted-use toilet room requirement. In recreational facilities where separate-sex bathing rooms are provided, an *accessible* family or assisted-use bathing room shall be provided. Fixtures located within family or assisted-use toilet and bathing rooms shall be included in determining the number of fixtures provided in an occupancy.

Exception: Where each separate-sex bathing room has only one shower or bathtub fixture, a family or assisted-use bathing room is not required.

1109.2.1.1 Standard. Family or assisted-use toilet and bathing rooms shall comply with Sections 1109.2.1.2 through 1109.2.1.7.

1109.2.1.2 Family or assisted-use toilet rooms. Family or assisted-use toilet rooms shall include only one water closet and only one lavatory. A family or assisted-use bathing room in accordance with Section 1109.2.1.3 shall be considered a family or assisted-use toilet room.

Exception: A urinal is permitted to be provided in addition to the water closet in a family or assisted-use toilet room.

1109.2.1.3 Family or assisted-use bathing rooms. Family or assisted-use bathing rooms shall include only one shower or bathtub fixture. Family or assisted-use bathing rooms shall also include one water closet and one lavatory. Where storage facilities are provided for separate-sex bathing rooms, *accessible* storage facilities shall be provided for family or assisted-use bathing rooms.

1109.2.1.4 Location. Family or assisted-use toilet and bathing rooms shall be located on an *accessible route*. Family or assisted-use toilet rooms shall be located not more than one *story* above or below separate-sex toilet rooms. The *accessible route* from any separate-sex toilet room to a family or assisted-use toilet room shall not exceed 500 feet (152 m).

1109.2.1.5 Prohibited location. In passenger transportation facilities and airports, the *accessible route* from separate-sex toilet rooms to a family or assisted-use toilet room shall not pass through security checkpoints.

1109.2.1.6 Clear floor space. Where doors swing into a family or assisted-use toilet or bathing room, a clear floor space not less than 30 inches by 48 inches (762 mm by 1219 mm) shall be provided, within the room, beyond the area of the door swing.

1109.2.1.7 Privacy. Doors to family or assisted-use toilet and bathing rooms shall be securable from within the room.

1109.2.2 Water closet compartment. Where water closet compartments are provided in a toilet room or bathing room, at least 5 percent of the total number of compartments shall be wheelchair *accessible*. Where the combined total water closet compartments and urinals provided in a toilet room or bathing room is six or more, at least 5 percent of the total number of compartments shall be ambulatory *accessible*, provided in addition to the wheelchair-*accessible* compartment.

1109.2.3 Lavatories. Where lavatories are provided, at least 5 percent, but not less than one, shall be *accessible*. Where an *accessible* lavatory is located within the *accessi-*

ble water closet compartment at least one additional *accessible* lavatory shall be provided in the multicompartment toilet room outside the water closet compartment. Where the total lavatories provided in a toilet room or bathing facility is six or more, at least one lavatory with enhanced reach ranges shall be provided.

1109.3 Sinks. Where sinks are provided, at least 5 percent but not less than one provided in *accessible* spaces shall be *accessible*.

Exception: Mop or service sinks are not required to be *accessible*.

1109.4 Kitchens and kitchenettes. Where kitchens and kitchenettes are provided in *accessible* spaces or rooms, they shall be *accessible*.

1109.5 Drinking fountains. Where drinking fountains are provided on an exterior site, on a floor or within a secured area, the drinking fountains shall be provided in accordance with Sections 1109.5.1 and 1109.5.2.

1109.5.1 Minimum number. No fewer than two drinking fountains shall be provided. One drinking fountain shall comply with the requirements for people who use a wheelchair and one drinking fountain shall comply with the requirements for standing persons.

Exceptions:

1. A single drinking fountain with two separate spouts that complies with the requirements for people who use a wheelchair and standing persons shall be permitted to be substituted for two separate drinking fountains.
2. Where drinking fountains are primarily for children's use, drinking fountains for people using wheelchairs shall be permitted to comply with the children's provisions in ICC A117.1 and drinking fountains for standing children shall be permitted to provide the spout at 30 inches (762 mm) minimum above the floor.

1109.5.2 More than the minimum number. Where more than the minimum number of drinking fountains specified in Section 1109.5.1 is provided, 50 percent of the total number of drinking fountains provided shall comply with the requirements for persons who use a wheelchair and 50 percent of the total number of drinking fountains provided shall comply with the requirements for standing persons.

Exceptions:

1. Where 50 percent of the drinking fountains yields a fraction, 50 percent shall be permitted to be rounded up or down, provided that the total number of drinking fountains complying with this section equals 100 percent of the drinking fountains.
2. Where drinking fountains are primarily for children's use, drinking fountains for people using wheelchairs shall be permitted to comply with the children's provisions in ICC A117.1 and drinking fountains for standing children shall be permitted to provide the spout at 30 inches (762 mm) minimum above the floor.

1109.6 Saunas and steam rooms. Where provided, saunas and steam rooms shall be *accessible*.

Exception: Where saunas or steam rooms are clustered at a single location, at least 5 percent of the saunas and steam rooms, but not less than one, of each type in each cluster shall be *accessible*.

1109.7 Elevators. Passenger elevators on an *accessible route* shall be *accessible* and comply with Chapter 30.

1109.8 Lifts. Platform (wheelchair) lifts are permitted to be a part of a required *accessible route* in new construction where indicated in Items 1 through 10. Platform (wheelchair) lifts shall be installed in accordance with ASME A18.1.

1. An *accessible route* to a performing area and speaker platforms.
2. An *accessible route* to *wheelchair spaces* required to comply with the *wheelchair space* dispersion requirements of Sections 1108.2.2 through 1108.2.6.
3. An *accessible route* to spaces that are not open to the general public with an *occupant load* of not more than five.
4. An *accessible route* within an individual *dwelling unit* or *sleeping unit* required to be an *Accessible unit*, *Type A unit* or *Type B unit*.
5. An *accessible route* to jury boxes and witness stands; raised courtroom stations including judges' benches, clerks' stations, bailiffs' stations, deputy clerks' stations and court reporters' stations; and to depressed areas such as the well of the court.
6. An *accessible route* to load and unload areas serving amusement rides.
7. An *accessible route* to play components or soft contained play structures.
8. An *accessible route* to team or player seating areas serving *areas of sport activity*.
9. An *accessible route* instead of gangways serving recreational boating facilities and fishing piers and platforms.
10. An *accessible route* where existing exterior *site* constraints make use of a *ramp* or elevator infeasible.

1109.9 Storage. Where fixed or built-in storage elements such as cabinets, coat hooks, shelves, medicine cabinets, lockers, closets and drawers are provided in required *accessible* spaces, at least 5 percent, but not less than one of each type shall be *accessible*.

1109.9.1 Equity. *Accessible* facilities and spaces shall be provided with the same storage elements as provided in the similar nonaccessible facilities and spaces.

1109.9.2 Shelving and display units. Self-service shelves and display units shall be located on an *accessible route*. Such shelving and display units shall not be required to comply with reach-range provisions.

1109.10 Detectable warnings. Passenger transit platform edges bordering a drop-off and not protected by platform screens or *guards* shall have a *detectable warning*.

Exception: *Detectable warnings* are not required at bus stops.

1109.11 Seating at tables, counters and work surfaces. Where seating or standing space at fixed or built-in tables, counters or work surfaces is provided in *accessible* spaces, at least 5 percent of the seating and standing spaces, but not less than one, shall be *accessible*.

Exception: Check-writing surfaces at check-out aisles not required to comply with Section 1109.12.2 are not required to be *accessible*.

1109.11.1 Dispersion. *Accessible* fixed or built-in seating at tables, counters or work surfaces shall be distributed throughout the space or facility containing such elements and located on a level accessed by an *accessible route*.

1109.11.2 Visiting areas. Visiting areas in judicial facilities and Group I-3 shall comply with Sections 1109.11.2.1 and 1109.11.2.2.

** **1109.11.2.1 Cubicles and counters.** At least 5 percent, but not less than one of the cubicles, shall be *accessible* on both the visitor and detainee sides. Where counters are provided, at least one shall be *accessible* on both the visitor and detainee sides.

Exception: This requirement shall not apply to the detainee side of cubicles or counters at noncontact visiting areas not serving *Accessible unit* holding cells.

** **1109.11.2.2 Partitions.** Where solid partitions or security glazing separate visitors from detainees, at least one of each type of cubicle or counter partition shall be *accessible*.

1109.12 Service facilities. Service facilities shall provide for *accessible* features in accordance with Sections 1109.12.1 through 1109.12.5.

1109.12.1 Dressing, fitting and locker rooms. Where dressing rooms, fitting rooms or locker rooms are provided, at least 5 percent, but not less than one, of each type of use in each cluster provided shall be *accessible*.

1109.12.2 Check-out aisles. Where check-out aisles are provided, *accessible* check-out aisles shall be provided in accordance with Table 1109.12.2. Where check-out aisles serve different functions, accessible check-out aisles shall be provided in accordance with Table 1109.12.2 for each function. Where check-out aisles are dispersed throughout the building or facility, *accessible* check-out aisles shall also be dispersed. Traffic control devices, security devices and turnstiles located in *accessible* check-out aisles or lanes shall be *accessible*.

Exception: Where the public use area is under 5,000 square feet (465 m^2) not more than one *accessible* check-out aisle shall be required.

TABLE 1109.12.2
ACCESSIBLE CHECK-OUT AISLES

TOTAL CHECK-OUT AISLES OF EACH FUNCTION	MINIMUM NUMBER OF ACCESSIBLE CHECK-OUT AISLES OF EACH FUNCTION
1 to 4	1
5 to 8	2
9 to 15	3
Over 15	3, plus 20% of additional aisles

1109.12.3 Point of sale and service counters. Where counters are provided for sales or distribution of goods or services, at least one of each type provided shall be *accessible*. Where such counters are dispersed throughout the building or facility, *accessible* counters shall also be dispersed.

1109.12.4 Food service lines. Food service lines shall be *accessible*. Where self-service shelves are provided, at least 50 percent, but not less than one, of each type provided shall be *accessible*.

1109.12.5 Queue and waiting lines. Queue and waiting lines servicing *accessible* counters or check-out aisles shall be *accessible*.

1109.13 Controls, operating mechanisms and hardware. Controls, operating mechanisms and hardware intended for operation by the occupant, including switches that control lighting and ventilation and electrical convenience outlets, in *accessible* spaces, along *accessible routes* or as parts of *accessible* elements shall be *accessible*.

Exceptions:

1. Operable parts that are intended for use only by service or maintenance personnel shall not be required to be *accessible*.
2. Electrical or communication receptacles serving a dedicated use shall not be required to be *accessible*.
3. Where two or more outlets are provided in a kitchen above a length of counter top that is uninterrupted by a sink or appliance, one outlet shall not be required to be *accessible*.
4. Floor electrical receptacles shall not be required to be *accessible*.
5. HVAC diffusers shall not be required to be *accessible*.
6. Except for light switches, where redundant controls are provided for a single element, one control in each space shall not be required to be *accessible*.
7. Access doors or gates in barrier walls and fences protecting pools, spas and hot tubs shall be permitted to comply with Section 1008.1.9.2.

1109.14 Fuel-dispensing systems. Fuel-dispensing systems shall be *accessible*.

1109.15 Gaming machines and gaming tables. Two percent, but not less than one, of each type of gaming table pro-

vided shall be *accessible* and provided with a front approach. Two percent of gaming machines provided shall be *accessible* and provided with a front approach. *Accessible* gaming machines shall be distributed throughout the different types of gaming machines provided.

SECTION 1110
RECREATIONAL FACILITIES

1110.1 General. Recreational facilities shall be provided with *accessible* features in accordance with Sections 1110.2 through 1110.4.

1110.2 Facilities serving Group R-2, R-3 and R-4 occupancies. Recreational facilities that serve Group R-2, R-3 and Group R-4 occupancies shall comply with Sections 1110.2.1 through 1110.2.3, as applicable.

1110.2.1 Facilities serving Accessible units. In Group R-2 and R-4 occupancies where recreational facilities serve *Accessible units*, every recreational facility of each type serving *Accessible units* shall be *accessible*.

1110.2.2 Facilities serving Type A and Type B units in a single building. In Group R-2, R-3 and R-4 occupancies where recreational facilities serve a single building containing *Type A units* or *Type B units*, 25 percent, but not less than one, of each type of recreational facility shall be *accessible*. Every recreational facility of each type on a site shall be considered to determine the total number of each type that is required to be *accessible*.

1110.2.3 Facilities serving Type A and Type B units in multiple buildings. In Group R-2, R-3 and R-4 occupancies on a single site where multiple buildings containing *Type A units* or *Type B units* are served by recreational facilities, 25 percent, but not less than one, of each type of recreational facility serving each building shall be *accessible*. The total number of each type of recreational facility that is required to be *accessible* shall be determined by considering every recreational facility of each type serving each building on the site.

1110.3 Other occupancies. Recreational facilities not falling within the purview of Section 1110.2 shall be *accessible*.

1110.4 Recreational facilities. Recreational facilities shall be *accessible* and shall be on an *accessible route* to the extent specified in this section.

1110.4.1 Area of sport activity. Each *area of sport activity* shall be on an *accessible route* and shall not be required to be *accessible* except as provided for in Sections 1110.4.2 through 1110.4.14.

** **1110.4.2 Team or player seating.** At least one wheelchair space shall be provided in team or player seating areas serving *areas of sport activity*.

Exception: Wheelchair spaces shall not be required in team or player seating areas serving bowling lanes that are not required to be *accessible* in accordance with Section 1110.4.3.

** **1110.4.3 Bowling lanes.** An *accessible* route shall be provided to at least 5 percent, but not less than one, of each type of bowling lane.

1110.4.4 Court sports. In court sports, at least one *accessible* route shall directly connect both sides of the court.

1110.4.5 Raised boxing or wrestling rings. Raised boxing or wrestling rings are not required to be *accessible* or to be on an *accessible* route. **

1110.4.6 Raised refereeing, judging and scoring areas. Raised structures used solely for refereeing, judging or scoring a sport are not required to be *accessible* or to be on an *accessible route*. **

1110.4.7 Animal containment areas. Animal containment areas that are not within public use areas are not required to be *accessible* or to be on an *accessible route*.

1110.4.8 Amusement rides. Amusement rides that move persons through a fixed course within a defined area shall comply with Sections 1110.4.8.1 through 1110.4.8.3.

Exception: Mobile or portable amusement rides shall not be required to be *accessible*.

1110.4.8.1 Load and unload areas. Load and unload areas serving amusement rides shall be *accessible* and be on an *accessible route*. Where load and unload areas have more than one loading or unloading position, at least one loading and unloading position shall be on an *accessible route*.

1110.4.8.2 Wheelchair spaces, ride seats designed for transfer and transfer devices. Where amusement rides are in the load and unload position, the following shall be on an *accessible route*.

1. The position serving a wheelchair space.
2. Amusement ride seats designed for transfer.
3. Transfer devices.

1110.4.8.3 Minimum number. Amusement rides shall provide at least one wheelchair space, amusement ride seat designed for transfer or transfer device.

Exceptions:

1. Amusement rides that are controlled or operated by the rider are not required to comply with this section.
2. Amusement rides designed primarily for children, where children are assisted on and off the ride by an adult, are not required to comply with this section.
3. Amusement rides that do not provide seats that are built-in or mechanically fastened shall not be required to comply with this section.

1110.4.9 Recreational boating facilities. Boat slips required to be *accessible* by Sections 1110.4.9.1 and 1110.4.9.2 and boarding piers at boat launch ramps required to be *accessible* by Section 1110.4.9.3 shall be on an *accessible route*.

1110.4.9.1 Boat slips. *Accessible* boat slips shall be provided in accordance with Table 1110.4.9.1. All units on the site shall be combined to determine the number of *accessible* boat slips required. Where the number of boat slips is not identified, each 40 feet (12 m) of boat

slip edge provided along the perimeter of the pier shall be counted as one boat slip for the purpose of this section.

Exception: Boat slips not designed for embarking or disembarking are not required to be *accessible* or be on an *accessible route*.

1110.4.9.2 Dispersion. *Accessible* boat slips shall be dispersed throughout the various types of boat slips provided. Where the minimum number of *accessible* boat slips has been met, no further dispersion shall be required.

1110.4.9.3 Boarding piers at boat launch ramps. Where boarding piers are provided at boat launch ramps, at least 5 percent, but not less than one, of the boarding piers shall be *accessible*.

1110.4.10 Exercise machines and equipment. At least one of each type of exercise machine and equipment shall be on an *accessible route*.

1110.4.11 Fishing piers and platforms. Fishing piers and platforms shall be *accessible* and be on an *accessible route*.

1110.4.12 Miniature golf facilities. Miniature golf facilities shall comply with Sections 1110.4.12.1 through 1110.4.12.3.

1110.4.12.1 Minimum number. At least 50 percent of holes on miniature golf courses shall be *accessible*.

1110.4.12.2 Miniature golf course configuration. Miniature golf courses shall be configured so that the *accessible* holes are consecutive. Miniature golf courses shall provide an *accessible route* from the last *accessible* hole to the course entrance or exit without requiring travel through any other holes on the course.

Exception: One break in the sequence of consecutive holes shall be permitted provided that the last hole on the miniature golf course is the last hole in the sequence.

1110.4.12.3 Accessible route. Holes required to comply with Section 1110.4.12.1, including the start of play, shall be on an *accessible route*.

1110.4.13 Swimming pools, wading pools, hot tubs and spas. Swimming pools, wading pools, hot tubs and spas shall be *accessible* and be on an *accessible route*.

Exceptions:

1. Catch pools or a designated section of a pool used as a terminus for a water slide flume shall not be required to provide an *accessible* means of entry, provided that a portion of the catch pool edge is on an *accessible route*.
2. Where spas or hot tubs are provided in a cluster, at least 5 percent, but not less than one spa or hot tub in each cluster, shall be *accessible* and be on an *accessible route*.
3. Swimming pools, wading pools, spas and hot tubs that are required to be *accessible* by Sections 1110.2.2 and 1110.2.3 are not required to provide *accessible* means of entry into the water.

1110.4.13.1 Raised diving boards and diving platforms. Raised diving boards and diving platforms are not required to be *accessible* or to be on an *accessible route*. **

1110.4.13.2 Water slides. Water slides are not required to be *accessible* or to be on an *accessible route*.

1110.4.14 Shooting facilities with firing positions. Where shooting facilities with firing positions are designed and constructed at a site, at least 5 percent, but not less than one, of each type of firing position shall be *accessible* and be on an *accessible route*.

TABLE 1110.4.9.1
BOAT SLIPS

TOTAL NUMBER OF BOAT SLIPS PROVIDED	MINIMUM NUMBER OF REQUIRED ACCESSIBLE BOAT SLIPS
1 to 25	1
26 to 50	2
51 to 100	3
101 to 150	4
151 to 300	5
301 to 400	6
401 to 500	7
501 to 600	8
601 to 700	9
701 to 800	10
801 to 900	11
901 to 1000	12
1001 and over	12, plus 1 for every 100, or fraction thereof, over 1,000

SECTION 1111
SIGNAGE

1111.1 Signs. Required *accessible* elements shall be identified by the International Symbol of Accessibility at the following locations.

1. *Accessible* parking spaces required by Section 1106.1.

   Exception: Where the total number of parking spaces provided is four or less, identification of *accessible* parking spaces is not required.

2. *Accessible* parking spaces required by Section 1106.2.

   Exception: In Group I-1, R-2, R-3 and R-4 facilities, where parking spaces are assigned to specific *dwelling units* or *sleeping units*, identification of *accessible* parking spaces is not required.

3. *Accessible* passenger loading zones.
4. *Accessible* rooms where multiple single-user toilet or bathing rooms are clustered at a single location.
5. *Accessible* entrances where not all entrances are *accessible*.
6. *Accessible* check-out aisles where not all aisles are *accessible*. The sign, where provided, shall be above the check-out aisle in the same location as the check-out aisle number or type of check-out identification.
7. Family or assisted-use toilet and bathing rooms.
8. *Accessible* dressing, fitting and locker rooms where not all such rooms are *accessible*.
9. *Accessible* areas of refuge in accordance with Section 1007.9.
10. Exterior areas for assisted rescue in accordance with Section 1007.9.
11. In recreational facilities, lockers that are required to be *accessible* in accordance with Section 1109.9.

1111.2 Directional signage. Directional signage indicating the route to the nearest like *accessible* element shall be provided at the following locations. These directional signs shall include the International Symbol of Accessibility and sign characters shall meet the visual character requirements in accordance with ICC A117.1.

1. Inaccessible building entrances.
2. Inaccessible public toilets and bathing facilities.
3. Elevators not serving an *accessible route*.
4. At each separate-sex toilet and bathing room indicating the location of the nearest family/assisted use toilet or bathing room where provided in accordance with Section 1109.2.1.
5. At *exits* and *exit stairways* serving a required *accessible* space, but not providing an *approved* accessible *means of egress*, signage shall be provided in accordance with Section 1007.10.
6. Where drinking fountains for persons using wheelchairs and drinking fountains for standing persons are not located adjacent to each other, directional signage shall be provided indicating the location of the other drinking fountains.

1111.3 Other signs. Signage indicating special accessibility provisions shall be provided as shown.

1. Each assembly area required to comply with Section 1108.2.7 shall provide a sign notifying patrons of the availability of assistive listening systems. The sign shall comply with ICC A117.1 requirements for visual characters and include the International Symbol of Access for Hearing Loss.

   Exception: Where ticket offices or windows are provided, signs are not required at each assembly area provided that signs are displayed at each ticket office or window informing patrons of the availability of assistive listening systems.

2. At each door to an *area of refuge*, an exterior area for assisted rescue, an egress *stairway*, *exit passageway* and *exit discharge*, signage shall be provided in accordance with Section 1013.4.
3. At *areas of refuge*, signage shall be provided in accordance with Section 1009.11.
4. At exterior areas for assisted rescue, signage shall be provided in accordance with Section 1009.11.
5. At two-way communication systems, signage shall be provided in accordance with Section 1009.8.2.
6. In *interior exit stairways* and *ramps*, floor level signage shall be provided in accordance with Section 1023.9.
7. Signs identifying the type of access provided on amusement rides required to be *accessible* by Section 1110.4.8 shall be provided at entries to queues and waiting lines. In addition, where *accessible* unload areas also serve as *accessible* load areas, signs indicating the location of the *accessible* load and unload areas shall be provided at entries to queues and waiting lines. These directional sign characters shall meet the visual character requirements in accordance with ICC A117.1.

1111.4 Variable message signs. Where provided in the locations in Sections 1111.4.1 and 1111.4.2, variable message signs shall comply with the variable message sign requirements of ICC A117.1.

1111.4.1 Transportation facilities. Where provided in transportation facilities, variable message signs conveying transportation-related information shall comply with Section 1111.4.

1111.4.2 Emergency shelters. Where provided in buildings that are designated as emergency shelters, variable message signs conveying emergency-related information shall comply with Section 1111.4.

Exception: Where equivalent information is provided in an audible manner, variable message signs are not required to comply with ICC A117.1.

CHAPTER 12

INTERIOR ENVIRONMENT

SECTION 1201
GENERAL

1201.1 Scope. The provisions of this chapter shall govern ventilation, temperature control, lighting, *yards* and *courts*, sound transmission, room dimensions, surrounding materials and rodentproofing associated with the interior spaces of buildings.

SECTION 1202
DEFINITIONS

1202.1 General. The following terms are defined in Chapter 2:

SUNROOM.

THERMAL ISOLATION.

SECTION 1203
VENTILATION

1203.1 General. Buildings shall be provided with natural ventilation in accordance with Section 1203.4, or mechanical ventilation in accordance with the *International Mechanical Code*.

Where the air infiltration rate in a *dwelling unit* is less than 5 air changes per hour when tested with a blower door at a pressure 0.2 inch w.c. (50 Pa) in accordance with Section 402.4.1.2 of the *International Energy Conservation Code—Residential Provisions*, the *dwelling unit* shall be ventilated by mechanical means in accordance with Section 403 of the *International Mechanical Code*. *Ambulatory care facilities* and Group I-2 occupancies shall be ventilated by mechanical means in accordance with Section 407 of the *International Mechanical Code*.

1203.2 Ventilation required. Enclosed *attics* and enclosed rafter spaces formed where ceilings are applied directly to the underside of roof framing members shall have cross ventilation for each separate space by ventilation openings protected against the entrance of rain and snow. Blocking and bridging shall be arranged so as not to interfere with the movement of air. An airspace of not less than 1 inch (25 mm) shall be provided between the insulation and the roof sheathing. The net free ventilating area shall be not less than $^1/_{150}$ of the area of the space ventilated. Ventilators shall be installed in accordance with manufacturer's installation instructions.

Exception: The net free cross-ventilation area shall be permitted to be reduced to $^1/_{300}$ provided both of the following conditions are met:

1. In Climate Zones 6, 7 and 8, a Class I or II vapor retarder is installed on the warm-in-winter side of the ceiling.
2. At least 40 percent and not more than 50 percent of the required venting area is provided by ventilators located in the upper portion of the *attic* or rafter space. Upper ventilators shall be located not more than 3 feet (914 mm) below the ridge or highest point of the space, measured vertically, with the balance of the *ventilation* provided by eave or cornice vents. Where the location of wall or roof framing members conflicts with the installation of upper ventilators, installation more than 3 feet (914 mm) below the ridge or highest point of the space shall be permitted.

1203.2.1 Openings into attic. Exterior openings into the *attic* space of any building intended for human occupancy shall be protected to prevent the entry of birds, squirrels, rodents, snakes and other similar creatures. Openings for ventilation having a least dimension of not less than $^1/_{16}$ inch (1.6 mm) and not more than $^1/_4$ inch (6.4 mm) shall be permitted. Openings for ventilation having a least dimension larger than $^1/_4$ inch (6.4 mm) shall be provided with corrosion-resistant wire cloth screening, hardware cloth, perforated vinyl or similar material with openings having a least dimension of not less than $^1/_{16}$ inch (1.6 mm) and not more than $^1/_4$ inch (6.4 mm). Where combustion air is obtained from an *attic* area, it shall be in accordance with Chapter 7 of the *International Mechanical Code*.

1203.3 Unvented attic and unvented enclosed rafter assemblies. Unvented *attics* and unvented enclosed roof framing assemblies created by ceilings applied directly to the underside of the roof framing members/rafters and the structural roof sheathing at the top of the roof framing members shall be permitted where all the following conditions are met:

1. The unvented *attic* space is completely within the *building thermal envelope*.
2. No interior Class I vapor retarders are installed on the ceiling side (*attic* floor) of the unvented *attic* assembly or on the ceiling side of the unvented enclosed roof framing assembly.
3. Where wood shingles or shakes are used, a minimum $^1/_4$-inch (6.4 mm) vented airspace separates the shingles or shakes and the roofing underlayment above the structural sheathing.
4. In Climate Zones 5, 6, 7 and 8, any air-impermeable insulation shall be a Class II vapor retarder or shall have a Class III vapor retarder coating or covering in direct contact with the underside of the insulation.
5. Insulation shall be located in accordance with the following:

   5.1. Item 5.1.1, 5.1.2, 5.1.3 or 5.1.4 shall be met, depending on the air permeability of the insulation directly under the structural roof sheathing.

   5.1.1. Where only air-impermeable insulation is provided, it shall be applied

in direct contact with the underside of the structural roof sheathing.

5.1.2. Where air-permeable insulation is provided inside the building thermal envelope, it shall be installed in accordance with Item 5.1. In addition to the air-permeable insulation installed directly below the structural sheathing, rigid board or sheet insulation shall be installed directly above the structural roof sheathing in accordance with the R values in Table 1203.3 for condensation control.

5.1.3. Where both air-impermeable and air-permeable insulation are provided, the *air-impermeable insulation* shall be applied in direct contact with the underside of the structural roof sheathing in accordance with Item 5.1.1 and shall be in accordance with the R values in Table 1203.3 for condensation control. The *air-permeable insulation* shall be installed directly under the *air-impermeable insulation.*

5.1.4. Alternatively, sufficient rigid board or sheet insulation shall be installed directly above the structural roof sheathing to maintain the monthly average temperature of the underside of the structural roof sheathing above 45°F (7°C). For calculation purposes, an interior air temperature of 68°F (20°C) is assumed and the exterior air temperature is assumed to be the monthly average outside air temperature of the three coldest months.

5.2. Where preformed insulation board is used as the *air-permeable insulation* layer, it shall be sealed at the perimeter of each individual sheet interior surface to form a continuous layer.

Exceptions:

1. Section 1203.3 does not apply to special use structures or enclosures such as swimming pool enclosures, data processing centers, hospitals or art galleries.
2. Section 1203.3 does not apply to enclosures in Climate Zones 5 through 8 that are humidified beyond 35 percent during the three coldest months.

1203.4 Under-floor ventilation. The space between the bottom of the floor joists and the earth under any building except spaces occupied by basements or cellars shall be provided with ventilation openings through foundation walls or *exterior walls*. Such openings shall be placed so as to provide cross ventilation of the under-floor space.

1203.4.1 Openings for under-floor ventilation. The net area of ventilation openings shall be not less than 1 square foot for each 150 square feet (0.67 m^2 for each 100 m^2) of crawl-space area. Ventilation openings shall be covered for their height and width with any of the following materials, provided that the least dimension of the covering shall be not greater than $^1/_4$ inch (6.4 mm):

1. Perforated sheet metal plates not less than 0.070 inch (1.8 mm) thick.
2. Expanded sheet metal plates not less than 0.047 inch (1.2 mm) thick.
3. Cast-iron grilles or gratings.
4. Extruded load-bearing vents.
5. Hardware cloth of 0.035-inch (0.89 mm) wire or heavier.
6. Corrosion-resistant wire mesh, with the least dimension not greater than $^1/_8$ inch (3.2 mm).

1203.4.2 Exceptions. The following are exceptions to Sections 1203.4 and 1203.4.1:

1. Where warranted by climatic conditions, ventilation openings to the outdoors are not required if ventilation openings to the interior are provided.

TABLE 1203.3
INSULATION FOR CONDENSATION CONTROL

CLIMATE ZONE	MINIMUM R-VALUE OF AIR-IMPERMEABLE INSULATION[a]
2B and 3B tile roof only	0 (none required)
1, 2A, 2B, 3A, 3B, 3C	R-5
4C	R-10
4A, 4B	R-15
5	R-20
6	R-25
7	R-30
8	R-35

a. Contributes to, but does not supersede, thermal resistance requirements for attic and roof assemblies in Section C402.2.1 of the *International Energy Conservation Code.*

2. The total area of ventilation openings is permitted to be reduced to $^1/_{1,500}$ of the under-floor area where the ground surface is covered with a Class I vapor retarder material and the required openings are placed so as to provide cross ventilation of the space. The installation of operable louvers shall not be prohibited.
3. Ventilation openings are not required where continuously operated mechanical ventilation is provided at a rate of 1.0 cubic foot per minute (cfm) for each 50 square feet (1.02 L/s for each 10 m^2) of crawl-space floor area and the ground surface is covered with a Class I vapor retarder.
4. Ventilation openings are not required where the ground surface is covered with a Class I vapor retarder, the perimeter walls are insulated and the space is conditioned in accordance with the *International Energy Conservation Code*.
5. For buildings in flood hazard areas as established in Section 1612.3, the openings for under-floor ventilation shall be deemed as meeting the flood opening requirements of ASCE 24 provided that the ventilation openings are designed and installed in accordance with ASCE 24.

1203.5 Natural ventilation. Natural *ventilation* of an occupied space shall be through windows, doors, louvers or other openings to the outdoors. The operating mechanism for such openings shall be provided with ready access so that the openings are readily controllable by the building occupants.

1203.5.1 Ventilation area required. The openable area of the openings to the outdoors shall be not less than 4 percent of the floor area being ventilated.

1203.5.1.1 Adjoining spaces. Where rooms and spaces without openings to the outdoors are ventilated through an adjoining room, the opening to the adjoining room shall be unobstructed and shall have an area of not less than 8 percent of the floor area of the interior room or space, but not less than 25 square feet (2.3 m^2). The openable area of the openings to the outdoors shall be based on the total floor area being ventilated.

Exception: Exterior openings required for *ventilation* shall be permitted to open into a sunroom with *thermal isolation* or a patio cover provided that the openable area between the sunroom addition or patio cover and the interior room shall have an area of not less than 8 percent of the floor area of the interior room or space, but not less than 20 square feet (1.86 m^2). The openable area of the openings to the outdoors shall be based on the total floor area being ventilated.

1203.5.1.2 Openings below grade. Where openings below grade provide required natural *ventilation*, the outside horizontal clear space measured perpendicular to the opening shall be one and one-half times the depth of the opening. The depth of the opening shall be measured from the average adjoining ground level to the bottom of the opening.

1203.5.2 Contaminants exhausted. Contaminant sources in naturally ventilated spaces shall be removed in accordance with the *International Mechanical Code* and the *International Fire Code*.

1203.5.2.1 Bathrooms. Rooms containing bathtubs, showers, spas and similar bathing fixtures shall be mechanically ventilated in accordance with the *International Mechanical Code*.

1203.5.3 Openings on yards or courts. Where natural *ventilation* is to be provided by openings onto *yards* or *courts*, such *yards* or *courts* shall comply with Section 1206.

1203.6 Other ventilation and exhaust systems. *Ventilation* and exhaust systems for occupancies and operations involving flammable or combustible hazards or other contaminant sources as covered in the *International Mechanical Code* or the *International Fire Code* shall be provided as required by both codes.

SECTION 1204
TEMPERATURE CONTROL

1204.1 Equipment and systems. Interior spaces intended for human occupancy shall be provided with active or passive space heating systems capable of maintaining an indoor temperature of not less than 68°F (20°C) at a point 3 feet (914 mm) above the floor on the design heating day.

Exceptions: Space heating systems are not required for:

1. Interior spaces where the primary purpose of the space is not associated with human comfort.
2. Group F, H, S or U occupancies.

SECTION 1205
LIGHTING

1205.1 General. Every space intended for human occupancy shall be provided with natural light by means of exterior glazed openings in accordance with Section 1205.2 or shall be provided with artificial light in accordance with Section 1205.3. Exterior glazed openings shall open directly onto a *public way* or onto a *yard* or *court* in accordance with Section 1206.

1205.2 Natural light. The minimum net glazed area shall be not less than 8 percent of the floor area of the room served.

1205.2.1 Adjoining spaces. For the purpose of natural lighting, any room is permitted to be considered as a portion of an adjoining room where one-half of the area of the common wall is open and unobstructed and provides an opening of not less than one-tenth of the floor area of the interior room or 25 square feet (2.32 m^2), whichever is greater.

Exception: Openings required for natural light shall be permitted to open into a sunroom with *thermal isolation* or a patio cover where the common wall provides a glazed area of not less than one-tenth of the floor area of the interior room or 20 square feet (1.86 m^2), whichever is greater.

1205.2.2 Exterior openings. Exterior openings required by Section 1205.2 for natural light shall open directly onto a *public way*, *yard* or *court*, as set forth in Section 1206.

Exceptions:

1. Required exterior openings are permitted to open into a roofed porch where the porch meets all of the following criteria:
   1.1. Abuts a *public way*, *yard* or *court*.
   1.2. Has a ceiling height of not less than 7 feet (2134 mm).
   1.3. Has a longer side at least 65 percent open and unobstructed.
2. Skylights are not required to open directly onto a *public way*, *yard* or *court*.

1205.3 Artificial light. Artificial light shall be provided that is adequate to provide an average illumination of 10 footcandles (107 lux) over the area of the room at a height of 30 inches (762 mm) above the floor level.

1205.4 Stairway illumination. *Stairways* within *dwelling units* and *exterior stairways* serving a *dwelling unit* shall have an illumination level on tread runs of not less than 1 footcandle (11 lux). *Stairways* in other occupancies shall be governed by Chapter 10.

1205.4.1 Controls. The control for activation of the required *stairway* lighting shall be in accordance with NFPA 70.

1205.5 Emergency egress lighting. The *means of egress* shall be illuminated in accordance with Section 1006.1.

SECTION 1206
YARDS OR COURTS

1206.1 General. This section shall apply to *yards* and *courts* adjacent to exterior openings that provide natural light or ventilation. Such *yards* and *courts* shall be on the same *lot* as the building.

1206.2 Yards. *Yards* shall be not less than 3 feet (914 mm) in width for buildings two *stories* or less above *grade plane*. For buildings more than two *stories above grade plane*, the minimum width of the *yard* shall be increased at the rate of 1 foot (305 mm) for each additional *story*. For buildings exceeding 14 *stories above grade plane*, the required width of the *yard* shall be computed on the basis of 14 *stories above grade plane*.

1206.3 Courts. *Courts* shall be not less than 3 feet (914 mm) in width. *Courts* having windows opening on opposite sides shall be not less than 6 feet (1829 mm) in width. *Courts* shall be not less than 10 feet (3048 mm) in length unless bounded on one end by a *public way* or *yard*. For buildings more than two *stories above grade plane*, the *court* shall be increased 1 foot (305 mm) in width and 2 feet (610 mm) in length for each additional *story*. For buildings exceeding 14 *stories above grade plane*, the required dimensions shall be computed on the basis of 14 *stories above grade plane*.

1206.3.1 Court access. Access shall be provided to the bottom of *courts* for cleaning purposes.

1206.3.2 Air intake. *Courts* more than two *stories* in height shall be provided with a horizontal air intake at the bottom not less than 10 square feet (0.93 m^2) in area and leading to the exterior of the building unless abutting a *yard* or *public way*.

1206.3.3 Court drainage. The bottom of every *court* shall be properly graded and drained to a public sewer or other *approved* disposal system complying with the *International Plumbing Code*.

SECTION 1207
SOUND TRANSMISSION

1207.1 Scope. This section shall apply to common interior walls, partitions and floor/ceiling assemblies between adjacent *dwelling units* and *sleeping units* or between *dwelling units* and *sleeping units* and adjacent public areas such as halls, *corridors*, *stairways* or *service areas*.

1207.2 Air-borne sound. Walls, partitions and floor/ceiling assemblies separating *dwelling units* and *sleeping units* from each other or from public or service areas shall have a sound transmission class of not less than 50, or not less than 45 if field tested, for air-borne noise when tested in accordance with ASTM E 90. Penetrations or openings in construction assemblies for piping; electrical devices; recessed cabinets; bathtubs; soffits; or heating, ventilating or exhaust ducts shall be sealed, lined, insulated or otherwise treated to maintain the required ratings. This requirement shall not apply to entrance doors; however, such doors shall be tight fitting to the frame and sill.

1207.2.1 Masonry. The sound transmission class of concrete masonry and clay masonry assemblies shall be calculated in accordance with TMS 0302 or determined through testing in accordance with ASTM E 90.

1207.3 Structure-borne sound. Floor/ceiling assemblies between *dwelling units* and *sleeping units* or between a *dwelling unit* or *sleeping unit* and a public or service area within the structure shall have an impact insulation class rating of not less than 50, or not less than 45 if field tested, when tested in accordance with ASTM E 492.

SECTION 1208
INTERIOR SPACE DIMENSIONS

1208.1 Minimum room widths. *Habitable spaces*, other than a kitchen, shall be not less than 7 feet (2134 mm) in any plan dimension. Kitchens shall have a clear passageway of not less than 3 feet (914 mm) between counter fronts and appliances or counter fronts and walls.

1208.2 Minimum ceiling heights. Occupiable spaces, *habitable spaces* and *corridors* shall have a ceiling height of not less than 7 feet 6 inches (2286 mm). Bathrooms, toilet rooms, kitchens, storage rooms and laundry rooms shall have a ceiling height of not less than 7 feet (2134 mm).

Exceptions:

1. In one- and two-family *dwellings*, beams or girders spaced not less than 4 feet (1219 mm) on center shall be permitted to project not more than 6 inches (152 mm) below the required ceiling height.
2. If any room in a building has a sloped ceiling, the prescribed ceiling height for the room is required in one-half the area thereof. Any portion of the room measuring less than 5 feet (1524 mm) from the finished floor to the ceiling shall not be included in any computation of the minimum area thereof.
3. The height of *mezzanines* and spaces below *mezzanines* shall be in accordance with Section 505.1.
4. Corridors contained within a *dwelling unit* or *sleeping unit* in a Group R occupancy shall have a ceiling height of not less than 7 feet (2134 mm).

1208.2.1 Furred ceiling. Any room with a furred ceiling shall be required to have the minimum ceiling height in two-thirds of the area thereof, but in no case shall the height of the furred ceiling be less than 7 feet (2134 mm).

1208.3 Room area. Every *dwelling unit* shall have no fewer than one room that shall have not less than 120 square feet (13.9 m^2) of *net floor area*. Other habitable rooms shall have a *net floor area* of not less than 70 square feet (6.5 m^2).

Exception: Kitchens are not required to be of a minimum floor area.

1208.4 Efficiency dwelling units. An efficiency living unit shall conform to the requirements of the code except as modified herein:

1. The unit shall have a living room of not less than 220 square feet (20.4 m^2) of floor area. An additional 100 square feet (9.3 m^2) of floor area shall be provided for each occupant of such unit in excess of two.
2. The unit shall be provided with a separate closet.
3. The unit shall be provided with a kitchen sink, cooking appliance and refrigeration facilities, each having a clear working space of not less than 30 inches (762 mm) in front. Light and *ventilation* conforming to this code shall be provided.
4. The unit shall be provided with a separate bathroom containing a water closet, lavatory and bathtub or shower.

SECTION 1209
ACCESS TO UNOCCUPIED SPACES

1209.1 Crawl spaces. Crawl spaces shall be provided with not fewer than one access opening that shall be not less than 18 inches by 24 inches (457 mm by 610 mm).

1209.2 Attic spaces. An opening not less than 20 inches by 30 inches (559 mm by 762 mm) shall be provided to any *attic* area having a clear height of over 30 inches (762 mm). Clear headroom of not less than 30 inches (762 mm) shall be provided in the *attic* space at or above the access opening.

1209.3 Mechanical appliances. Access to mechanical appliances installed in under-floor areas, in *attic* spaces and on roofs or elevated structures shall be in accordance with the *International Mechanical Code.*

SECTION 1210
TOILET AND BATHROOM REQUIREMENTS

[P] 1210.1 Required fixtures. The number and type of plumbing fixtures provided in any occupancy shall comply with Chapter 29.

1210.2 Finish materials. Walls, floors and partitions in toilet and bathrooms shall comply with Sections 1210.2.1 through 1210.2.4.

1210.2.1 Floors and wall bases. In other than *dwelling units*, toilet, bathing and shower room floor finish materials shall have a smooth, hard, nonabsorbent surface. The intersections of such floors with walls shall have a smooth, hard, nonabsorbent vertical base that extends upward onto the walls not less than 4 inches (102 mm).

1210.2.2 Walls and partitions. Walls and partitions within 2 feet (610 mm) of service sinks, urinals and water closets shall have a smooth, hard, nonabsorbent surface, to a height of not less than 4 feet (1219 mm) above the floor, and except for structural elements, the materials used in such walls shall be of a type that is not adversely affected by moisture.

Exception: This section does not apply to the following buildings and spaces:

1. Dwelling units and sleeping units.
2. Toilet rooms that are not accessible to the public and that have not more than one water closet.

Accessories such as grab bars, towel bars, paper dispensers and soap dishes, provided on or within walls, shall be installed and sealed to protect structural elements from moisture.

1210.2.3 Showers. Shower compartments and walls above bathtubs with installed shower heads shall be finished with a smooth, nonabsorbent surface to a height not less than 72 inches (1829 mm) above the drain inlet.

1210.2.4 Waterproof joints. Built-in tubs with showers shall have waterproof joints between the tub and adjacent wall.

[P] 1210.3 Privacy. Privacy at water closets and urinals shall be provided in accordance with Sections 1210.3.1 and 1210.3.2.

[P] 1210.3.1 Water closet compartment. Each water closet utilized by the public or employees shall occupy a

separate compartment with walls or partitions and a door enclosing the fixtures to ensure privacy.

Exceptions:

1. Water closet compartments shall not be required in a single-occupant toilet room with a lockable door.
2. Toilet rooms located in child day care facilities and containing two or more water closets shall be permitted to have one water closet without an enclosing compartment.
3. This provision is not applicable to toilet areas located within Group I-3 occupancy housing areas.

[P] 1210.3.2 Urinal partitions. Each urinal utilized by the public or employees shall occupy a separate area with walls or partitions to provide privacy. The walls or partitions shall begin at a height not more than 12 inches (305 mm) from and extend not less than 60 inches (1524 mm) above the finished floor surface. The walls or partitions shall extend from the wall surface at each side of the urinal not less than 18 inches (457 mm) or to a point not less than 6 inches (152 mm) beyond the outermost front lip of the urinal measured from the finished backwall surface, whichever is greater.

Exceptions:

1. Urinal partitions shall not be required in a single-occupant or family or assisted-use toilet room with a lockable door.
2. Toilet rooms located in child day care facilities and containing two or more urinals shall be permitted to have one urinal without partitions.

*

CHAPTER 13

ENERGY EFFICIENCY

User note: Code change proposals to this chapter will be considered by the International Energy Conservation Code Development Committee during the 2016 (Group B) Code Development Cycle. See explanation on page iv.

SECTION 1301
GENERAL

[E] 1301.1 Scope. This chapter governs the design and construction of buildings for energy efficiency.

[E] 1301.1.1 Criteria. Buildings shall be designed and constructed in accordance with the *International Energy Conservation Code*.

CHAPTER 14

EXTERIOR WALLS

User note: Code change proposals to sections preceded by the designation [BS] will be considered by the IBC – Structural Code Development Committee during the 2016 (Group B) Code Development Cycle. See explanation on page iv.

SECTION 1401
GENERAL

1401.1 Scope. The provisions of this chapter shall establish the minimum requirements for exterior walls; *exterior wall* coverings; *exterior wall* openings; exterior windows and doors; architectural *trim*; balconies and similar projections; and bay and oriel windows.

SECTION 1402
DEFINITIONS

1402.1 Definitions. The following terms are defined in Chapter 2:

ADHERED MASONRY VENEER.

ANCHORED MASONRY VENEER.

BACKING.

EXTERIOR INSULATION AND FINISH SYSTEMS (EIFS).

EXTERIOR INSULATION AND FINISH SYSTEMS (EIFS) WITH DRAINAGE.

EXTERIOR WALL.

EXTERIOR WALL COVERING.

EXTERIOR WALL ENVELOPE.

FENESTRATION.

FIBER-CEMENT SIDING.

HIGH-PRESSURE DECORATIVE EXTERIOR-GRADE COMPACT LAMINATE (HPL).

HIGH-PRESSURE DECORATIVE EXTERIOR-GRADE COMPACT LAMINATE (HPL) SYSTEM.

METAL COMPOSITE MATERIAL (MCM).

METAL COMPOSITE MATERIAL (MCM) SYSTEM.

POLYPROPYLENE SIDING.

PORCELAIN TILE.

VENEER.

VINYL SIDING.

WATER-RESISTIVE BARRIER.

SECTION 1403
PERFORMANCE REQUIREMENTS

1403.1 General. The provisions of this section shall apply to exterior walls, wall coverings and components thereof.

1403.2 Weather protection. Exterior walls shall provide the building with a weather-resistant *exterior wall envelope*. The *exterior wall envelope* shall include flashing, as described in Section 1405.4. The *exterior wall envelope* shall be designed and constructed in such a manner as to prevent the accumulation of water within the wall assembly by providing a *water-resistive barrier* behind the exterior veneer, as described in Section 1404.2, and a means for draining water that enters the assembly to the exterior. Protection against condensation in the *exterior wall* assembly shall be provided in accordance with Section 1405.3.

Exceptions:

1. A weather-resistant *exterior wall envelope* shall not be required over concrete or masonry walls designed in accordance with Chapters 19 and 21, respectively.
2. Compliance with the requirements for a means of drainage, and the requirements of Sections 1404.2 and 1405.4, shall not be required for an *exterior wall envelope* that has been demonstrated through testing to resist wind-driven rain, including joints, penetrations and intersections with dissimilar materials, in accordance with ASTM E 331 under the following conditions:
   - 2.1. *Exterior wall envelope* test assemblies shall include at least one opening, one control joint, one wall/eave interface and one wall sill. Tested openings and penetrations shall be representative of the intended end-use configuration.
   - 2.2. *Exterior wall envelope* test assemblies shall be at least 4 feet by 8 feet (1219 mm by 2438 mm) in size.
   - 2.3. *Exterior wall envelope* assemblies shall be tested at a minimum differential pressure of 6.24 pounds per square foot (psf) (0.297 kN/m^2).
   - 2.4. *Exterior wall envelope* assemblies shall be subjected to a minimum test exposure duration of 2 hours.

   The *exterior wall envelope* design shall be considered to resist wind-driven rain where the results of testing indicate that water did not penetrate control joints in the *exterior wall* envelope, joints at the perimeter of openings or intersections of terminations with dissimilar materials.
3. Exterior insulation and finish systems (EIFS) complying with Section 1408.4.1.

[BS] 1403.3 Structural. *Exterior walls*, and the associated openings, shall be designed and constructed to resist safely the superimposed loads required by Chapter 16.

1403.4 Fire resistance. *Exterior walls* shall be fire-resistance rated as required by other sections of this code with opening protection as required by Chapter 7.

1403.5 Vertical and lateral flame propagation. Exterior walls on buildings of Type I, II, III or IV construction that are greater than 40 feet (12 192 mm) in height above grade plane and contain a combustible *water-resistive barrier* shall be tested in accordance with and comply with the acceptance criteria of NFPA 285. For the purposes of this section, fenestration products and flashing of fenestration products shall not be considered part of the *water-resistive barrier*.

Exceptions:

1. Walls in which the *water-resistive barrier* is the only combustible component and the *exterior wall* has a wall covering of brick, concrete, stone, terra cotta, stucco or steel with minimum thicknesses in accordance with Table 1405.2.
2. Walls in which the *water-resistive barrier* is the only combustible component and the *water-resistive barrier* has a peak heat release rate of less than 150 kW/m^2, a total heat release of less than 20 MJ/m^2 and an effective heat of combustion of less than 18 MJ/kg as determined in accordance with ASTM E 1354 and has a flame spread index of 25 or less and a smoke-developed index of 450 or less as determined in accordance with ASTM E 84 or UL 723. The ASTM E 1354 test shall be conducted on specimens at the thickness intended for use, in the horizontal orientation and at an incident radiant heat flux of 50 kW/m^2.

[BS] 1403.6 Flood resistance. For buildings in flood hazard areas as established in Section 1612.3, *exterior walls* extending below the elevation required by Section 1612 shall be constructed with flood-damage-resistant materials.

[BS] 1403.7 Flood resistance for coastal high-hazard areas and coastal A zones. For buildings in coastal high-hazard areas and coastal A zones as established in Section 1612.3, electrical, mechanical and plumbing system components shall not be mounted on or penetrate through exterior walls that are designed to break away under flood loads.

SECTION 1404
MATERIALS

1404.1 General. Materials used for the construction of *exterior walls* shall comply with the provisions of this section. Materials not prescribed herein shall be permitted, provided that any such alternative has been *approved*.

1404.2 Water-resistive barrier. Not fewer than one layer of No.15 asphalt felt, complying with ASTM D 226 for Type 1 felt or other *approved* materials, shall be attached to the studs or sheathing, with flashing as described in Section 1405.4, in such a manner as to provide a continuous *water-resistive barrier* behind the *exterior wall* veneer.

[BS] 1404.3 Wood. *Exterior walls* of wood construction shall be designed and constructed in accordance with Chapter 23.

[BS] 1404.3.1 Basic hardboard. Basic hardboard shall conform to the requirements of AHA A135.4.

[BS] 1404.3.2 Hardboard siding. Hardboard siding shall conform to the requirements of AHA A135.6 and, where used structurally, shall be so identified by the *label* of an *approved* agency.

[BS] 1404.4 Masonry. *Exterior walls* of masonry construction shall be designed and constructed in accordance with this section and Chapter 21. Masonry units, mortar and metal accessories used in anchored and adhered veneer shall meet the physical requirements of Chapter 21. The backing of anchored and adhered veneer shall be of concrete, masonry, steel framing or wood framing. Continuous insulation meeting the applicable requirements of this code shall be permitted between the backing and the masonry veneer.

[BS] 1404.5 Metal. *Exterior walls* constructed of cold-formed steel, structural steel or aluminum shall be designed in accordance with Chapters 22 and 20, respectively.

[BS] 1404.5.1 Aluminum siding. Aluminum siding shall conform to the requirements of AAMA 1402.

[BS] 1404.5.2 Cold-rolled copper. Copper shall conform to the requirements of ASTM B 370.

[BS] 1404.5.3 Lead-coated copper. Lead-coated copper shall conform to the requirements of ASTM B 101.

[BS] 1404.6 Concrete. Exterior walls of concrete construction shall be designed and constructed in accordance with Chapter 19.

[BS] 1404.7 Glass-unit masonry. Exterior walls of glass-unit masonry shall be designed and constructed in accordance with Chapter 21.

1404.8 Plastics. Plastic panel, apron or spandrel walls as defined in this code shall not be limited in thickness, provided that such plastics and their assemblies conform to the requirements of Chapter 26 and are constructed of *approved* weather-resistant materials of adequate strength to resist the wind loads for cladding specified in Chapter 16.

1404.9 Vinyl siding. Vinyl siding shall be certified and labeled as conforming to the requirements of ASTM D 3679 by an *approved* quality control agency.

1404.10 Fiber-cement siding. Fiber-cement siding shall conform to the requirements of ASTM C 1186, Type A (or ISO 8336, Category A), and shall be so identified on labeling listing an *approved* quality control agency.

1404.11 Exterior insulation and finish systems. Exterior insulation and finish systems (EIFS) and exterior insulation and finish systems (EIFS) with drainage shall comply with Section 1408.

1404.12 Polypropylene siding. Polypropylene siding shall be certified and labeled as conforming to the requirements of ASTM D 7254 and those of Section 1404.12.1 or 1404.12.2 by an approved quality control agency. Polypropylene siding shall be installed in accordance with the requirements of Section 1405.18 and in accordance with the manufacturer's

instructions. Polypropylene siding shall be secured to the building so as to provide weather protection for the exterior walls of the building.

1404.12.1 Flame spread index. The certification of the flame spread index shall be accompanied by a test report stating that all portions of the test specimen ahead of the flame front remained in position during the test in accordance with ASTM E 84 or UL 723.

1404.12.2 Fire separation distance. The fire separation distance between a building with polypropylene siding and the adjacent building shall be not less than 10 feet (3048 mm).

1404.13 Foam plastic insulation. Foam plastic insulation used in *exterior wall covering* assemblies shall comply with Chapter 26.

SECTION 1405
INSTALLATION OF WALL COVERINGS

1405.1 General. *Exterior wall coverings* shall be designed and constructed in accordance with the applicable provisions of this section.

1405.2 Weather protection. *Exterior walls* shall provide weather protection for the building. The materials of the minimum nominal thickness specified in Table 1405.2 shall be acceptable as *approved* weather coverings.

1405.3 Vapor retarders. Vapor retarders as described in Section 1405.3.3 shall be provided in accordance with Sections 1405.3.1 and 1405.3.2, or an approved design using accepted engineering practice for hydrothermal analysis.

1405.3.1 Class I and II vapor retarders. Class I and II vapor retarders shall not be provided on the interior side of frame walls in Zones 1 and 2. Class I vapor retarders shall not be provided on the interior side of frame walls in Zones 3 and 4. Class I or II vapor retarders shall be provided on the interior side of frame walls in Zones 5, 6, 7, 8 and Marine 4. The appropriate zone shall be selected in accordance with Chapter 3 of the *International Energy Conservation Code.*

Exceptions:

1. Basement walls.
2. Below-grade portion of any wall.
3. Construction where moisture or its freezing will not damage the materials.
4. Conditions where Class III vapor retarders are required in Section 1405.3.2.

1405.3.2 Class III vapor retarders. Class III vapor retarders shall be permitted where any one of the conditions in Table 1405.3.2 is met. Only Class III vapor retarders shall be used on the interior side of frame walls where foam plastic insulating sheathing with a perm rating of less than 1 is applied in accordance with Table 1405.3.2 on the exterior side of the frame wall.

TABLE 1405.2
MINIMUM THICKNESS OF WEATHER COVERINGS

COVERING TYPE	MINIMUM THICKNESS (inches)
Adhered masonry veneer	0.25
Aluminum siding	0.019
Anchored masonry veneer	2.625
Asbestos-cement boards	0.125
Asbestos shingles	0.156
Cold-rolled copper[d]	0.0216 nominal
Copper shingles[d]	0.0162 nominal
Exterior plywood (with sheathing)	0.313
Exterior plywood (without sheathing)	See Section 2304.6
Fiber cement lap siding	0.25[c]
Fiber cement panel siding	0.25[c]
Fiberboard siding	0.5
Glass-fiber reinforced concrete panels	0.375
Hardboard siding[c]	0.25
High-yield copper[d]	0.0162 nominal
Lead-coated copper[d]	0.0216 nominal
Lead-coated high-yield copper	0.0162 nominal
Marble slabs	1
Particleboard (with sheathing)	See Section 2304.6
Particleboard (without sheathing)	See Section 2304.6
Porcelain tile	.025
Steel (approved corrosion resistant)	0.0149
Stone (cast artificial, anchored)	1.5
Stone (natural)	2
Structural glass	0.344
Stucco or exterior cement plaster	
Three-coat work over:	
Metal plaster base	0.875[b]
Unit masonry	0.625[b]
Cast-in-place or precast concrete	0.625[b]
Two-coat work over:	
Unit masonry	0.5[b]
Cast-in-place or precast concrete	0.375[b]
Terra cotta (anchored)	1
Terra cotta (adhered)	0.25
Vinyl siding	0.035
Wood shingles	0.375
Wood siding (without sheathing)[a]	0.5

For SI: 1 inch = 25.4 mm, 1 ounce = 28.35 g, 1 square foot = 0.093 m^2.

a. Wood siding of thicknesses less than 0.5 inch shall be placed over sheathing that conforms to Section 2304.6.

b. Exclusive of texture.

c. As measured at the bottom of decorative grooves.

d. 16 ounces per square foot for cold-rolled copper and lead-coated copper, 12 ounces per square foot for copper shingles, high-yield copper and lead-coated high-yield copper.

TABLE 1405.3.2
CLASS III VAPOR RETARDERS

ZONE	CLASS III VAPOR RETARDERS PERMITTED FOR:[a]
Marine 4	Vented cladding over wood structural panels Vented cladding over fiberboard Vented cladding over gypsum Insulated sheathing with *R*-value ≥ R2.5 over 2 × 4 wall Insulated sheathing with *R*-value ≥ R3.75 over 2 × 6 wall
5	Vented cladding over wood structural panels Vented cladding over fiberboard Vented cladding over gypsum Insulated sheathing with *R*-value ≥ R5 over 2 × 4 wall Insulated sheathing with *R*-value ≥ R7.5 over 2 × 6 wall
6	Vented cladding over fiberboard Vented cladding over gypsum Insulated sheathing with *R*-value ≥ R7.5 over 2 × 4 wall Insulated sheathing with *R*-value ≥ R11.25 over 2 × 6 wall
7 and 8	Insulated sheathing with *R*-value ≥ R10 over 2 × 4 wall Insulated sheathing with *R*-value ≥ R15 over 2 × 6 wall

For SI: 1 pound per cubic foot = 16 kg/m^3.

a. Spray foam with a minimum density of 2 lbs/ft^3 applied to the interior cavity side of wood structural panels, fiberboard, insulating sheathing or gypsum is deemed to meet the insulating sheathing requirement where the spray foam *R*-value meets or exceeds the specified insulating sheathing *R*-value.

1405.3.3 Material vapor retarder class. The *vapor retarder class* shall be based on the manufacturer's certified testing or a tested assembly.

The following shall be deemed to meet the class specified:

Class I: Sheet polyethylene, nonperforated aluminum foil with a perm rating of less than or equal to 0.1.

Class II: Kraft-faced fiberglass batts or paint with a perm rating greater than 0.1 and less than or equal to 1.0.

Class III: Latex or enamel paint with a perm rating of greater than 1.0 and less than or equal to 10.0.

1405.3.4 Minimum clear airspaces and vented openings for vented cladding. For the purposes of this section, vented cladding shall include the following minimum clear airspaces:

1. Vinyl lap or horizontal aluminum siding applied over a weather-resistive barrier as specified in this chapter.
2. Brick veneer with a clear airspace as specified in this code.
3. Other *approved* vented claddings.

1405.4 Flashing. Flashing shall be installed in such a manner so as to prevent moisture from entering the wall or to redirect that moisture to the exterior. Flashing shall be installed at the perimeters of exterior door and window assemblies, penetrations and terminations of *exterior wall* assemblies, *exterior wall* intersections with roofs, chimneys, porches, decks, balconies and similar projections and at built-in gutters and similar locations where moisture could enter the wall. Flashing with projecting flanges shall be installed on both sides and the ends of copings, under sills and continuously above projecting *trim*.

1405.4.1 Exterior wall pockets. In exterior walls of buildings or structures, wall pockets or crevices in which moisture can accumulate shall be avoided or protected with caps or drips, or other *approved* means shall be provided to prevent water damage.

1405.4.2 Masonry. Flashing and weep holes in anchored veneer shall be located in the first course of masonry above finished ground level above the foundation wall or slab, and other points of support, including structural floors, shelf angles and lintels where anchored veneers are designed in accordance with Section 1405.6.

1405.5 Wood veneers. Wood veneers on exterior walls of buildings of Type I, II, III and IV construction shall be not less than 1 inch (25 mm) nominal thickness, 0.438-inch (11.1 mm) exterior hardboard siding or 0.375-inch (9.5 mm) exterior-type wood structural panels or particleboard and shall conform to the following:

1. The veneer shall not exceed 40 feet (12 190 mm) in height above grade. Where fire-retardant-treated wood is used, the height shall not exceed 60 feet (18 290 mm) in height above grade.
2. The veneer is attached to or furred from a noncombustible backing that is fire-resistance rated as required by other provisions of this code.
3. Where open or spaced wood veneers (without concealed spaces) are used, they shall not project more than 24 inches (610 mm) from the building wall.

[BS] 1405.6 Anchored masonry veneer. Anchored masonry veneer shall comply with the provisions of Sections 1405.6, 1405.7, 1405.8 and 1405.9 and Sections 6.1 and 6.2 of TMS 402/ACI 530/ASCE 5.

[BS] 1405.6.1 Tolerances. Anchored masonry veneers in accordance with Chapter 14 are not required to meet the tolerances in Article 3.3 F1 of TMS 602/ACI 530.1/ASCE 6.

[BS] 1405.6.2 Seismic requirements. Anchored masonry veneer located in Seismic Design Category C, D, E or F shall conform to the requirements of Section 6.2.2.10 of TMS 402/ACI 530/ASCE 5.

[BS] 1405.7 Stone veneer. Anchored stone veneer units not exceeding 10 inches (254 mm) in thickness shall be anchored directly to masonry, concrete or to stud construction by one of the following methods:

1. With concrete or masonry backing, anchor ties shall be not less than 0.1055-inch (2.68 mm) corrosion-resistant wire, or *approved* equal, formed beyond the base of the backing. The legs of the loops shall be not less than 6 inches (152 mm) in length bent at right angles and laid in the mortar joint, and spaced so that the eyes or loops are 12 inches (305 mm) maximum on center in both directions. There shall be provided not less than a 0.1055-inch (2.68 mm) corrosion-resistant wire tie, or

approved equal, threaded through the exposed loops for every 2 square feet (0.2 m^2) of stone veneer. This tie shall be a loop having legs not less than 15 inches (381 mm) in length bent so that the tie will lie in the stone veneer mortar joint. The last 2 inches (51 mm) of each wire leg shall have a right-angle bend. One-inch (25 mm) minimum thickness of cement grout shall be placed between the backing and the stone veneer.

2. With wood stud backing, a 2-inch by 2-inch (51 by 51 mm) 0.0625-inch (1.59 mm) zinc-coated or nonmetallic coated wire mesh with two layers of water-resistive barrier in accordance with Section 1404.2 shall be applied directly to wood studs spaced not more than 16 inches (406 mm) on center. On studs, the mesh shall be attached with 2-inch-long (51 mm) corrosion-resistant steel wire furring nails at 4 inches (102 mm) on center providing a minimum 1.125-inch (29 mm) penetration into each stud and with 8d annular threaded nails at 8 inches (203 mm) on center. into top and bottom plates or with equivalent wire ties. There shall be not less than a 0.1055-inch (2.68 mm) zinc-coated or nonmetallic coated wire, or approved equal, attached to the stud with not smaller than an 8d (0.120 in. diameter) annular threaded nail for every 2 square feet (0.2 m^2) of stone veneer. This tie shall be a loop having legs not less than 15 inches (381 mm) in length, so bent that the tie will lie in the stone veneer mortar joint. The last 2 inches (51 mm) of each wire leg shall have a right-angle bend. One-inch (25 mm) minimum thickness of cement grout shall be placed between the backing and the stone veneer.

3. With cold-formed steel stud backing, a 2-inch by 2-inch (51 by 51 mm) 0.0625-inch (1.59 mm) zinc-coated or nonmetallic coated wire mesh with two layers of water-resistive barrier in accordance with Section 1404.2 shall be applied directly to steel studs spaced a not more than 16 inches (406 mm) on center. The mesh shall be attached with corrosion-resistant #8 self-drilling, tapping screws at 4 inches (102 mm) on center, and at 8 inches (203 mm) on center into top and bottom tracks or with equivalent wire ties. Screws shall extend through the steel connection not fewer than three exposed threads. There shall be not less than a 0.1055-inch (2.68 mm) corrosion-resistant wire, or approved equal, attached to the stud with not smaller than a #8 self-drilling, tapping screw extending through the steel framing not fewer than three exposed threads for every 2 square feet (0.2 m^2) of stone veneer. This tie shall be a loop having legs not less than 15 inches (381 mm) in length, so bent that the tie will lie in the stone veneer mortar joint. The last 2 inches (51 mm) of each wire leg shall have a right-angle bend. One-inch (25 mm) minimum thickness of cement grout shall be placed between the backing and the stone veneer. The cold-formed steel framing members shall have a minimum bare steel thickness of 0.0428 inches (1.087 mm).

[BS] 1405.8 Slab-type veneer. Anchored slab-type veneer units not exceeding 2 inches (51 mm) in thickness shall be anchored directly to masonry, concrete or light-frame construction. For veneer units of marble, travertine, granite or other stone units of slab form, ties of corrosion-resistant dowels in drilled holes shall be located in the middle third of the edge of the units, spaced not more than 24 inches (610 mm) apart around the periphery of each unit with not less than four ties per veneer unit. Units shall not exceed 20 square feet (1.9 m^2) in area. If the dowels are not tight fitting, the holes shall be drilled not more than 0.063 inch (1.6 mm) larger in diameter than the dowel, with the hole countersunk to a diameter and depth equal to twice the diameter of the dowel in order to provide a tight-fitting key of cement mortar at the dowel locations where the mortar in the joint has set. Veneer ties shall be corrosion-resistant metal capable of resisting, in tension or compression, a force equal to two times the weight of the attached veneer. If made of sheet metal, veneer ties shall be not smaller in area than 0.0336 by 1 inch (0.853 by 25 mm) or, if made of wire, not smaller in diameter than 0.1483-inch (3.76 mm) wire.

[BS] 1405.9 Terra cotta. Anchored terra cotta or ceramic units not less than $1^5/_8$ inches (41 mm) thick shall be anchored directly to masonry, concrete or stud construction. Tied terra cotta or ceramic veneer units shall be not less than $1^5/_8$ inches (41 mm) thick with projecting dovetail webs on the back surface spaced approximately 8 inches (203 mm) on center. The facing shall be tied to the backing wall with corrosion-resistant metal anchors of not less than No. 8 gage wire installed at the top of each piece in horizontal bed joints not less than 12 inches (305 mm) nor more than 18 inches (457 mm) on center; these anchors shall be secured to $^1/_4$-inch (6.4 mm) corrosion-resistant pencil rods that pass through the vertical aligned loop anchors in the backing wall. The veneer ties shall have sufficient strength to support the full weight of the veneer in tension. The facing shall be set with not less than a 2-inch (51 mm) space from the backing wall and the space shall be filled solidly with Portland cement grout and pea gravel. Immediately prior to setting, the backing wall and the facing shall be drenched with clean water and shall be distinctly damp when the grout is poured.

[BS] 1405.10 Adhered masonry veneer. Adhered masonry veneer shall comply with the applicable requirements in this section and Sections 6.1 and 6.3 of TMS 402/ACI 530/ASCE 5.

[BS] 1405.10.1 Exterior adhered masonry veneer. Exterior adhered masonry veneer shall be installed in accordance with Section 1405.10 and the manufacturer's instructions.

[BS] 1405.10.1.1 Water-resistive barriers. Water-resistive barriers shall be installed as required in Section 2510.6.

[BS] 1405.10.1.2 Flashing. Flashing shall comply with the applicable requirements of Section 1405.4 and the following.

[BS] 1405.10.1.2.1 Flashing at foundation. A corrosion-resistant screed or flashing of a minimum 0.019-inch (0.48 mm) or 26 gage galvanized or plastic with a minimum vertical attachment flange of $3^1/_2$ inches (89 mm) shall be installed to extend not less than 1 inch (25 mm) below the foundation plate

line on exterior stud walls in accordance with Section 1405.4. The water-resistive barrier shall lap over the exterior of the attachment flange of the screed or flashing.

[BS] 1405.10.1.3 Clearances. On exterior stud walls, adhered masonry veneer shall be installed not less than 4 inches (102 mm) above the earth, or not less than 2 inches (51 mm) above paved areas, or not less than $^1/_2$ inch (12.7 mm) above exterior walking surfaces that are supported by the same foundation that supports the exterior wall.

[BS] 1405.10.1.4 Adhered masonry veneer installed with lath and mortar. Exterior adhered masonry veneer installed with lath and mortar shall comply with the following.

[BS] 1405.10.1.4.1 Lathing. Lathing shall comply with the requirements of Section 2510.

[BS] 1405.10.1.4.2 Scratch coat. A nominal $^1/_2$-inch-thick (12.7 mm) layer of mortar complying with the material requirements of Sections 2103 and 2512.2 shall be applied, encapsulating the lathing. The surface of this mortar shall be scored horizontally, resulting in a scratch coat.

[BS] 1405.10.1.4.3 Adhering veneer. The masonry veneer units shall be adhered to the mortar scratch coat with a nominal $^1/_2$-inch-thick (12.7 mm) setting bed of mortar complying with Sections 2103 and 2512.2 applied to create a full setting bed for the back of the masonry veneer units. The masonry veneer units shall be worked into the setting bed resulting in a nominal $^3/_8$-inch (9.5 mm) setting bed after the masonry veneer units are applied.

[BS] 1405.10.1.5 Adhered masonry veneer applied directly to masonry and concrete. Adhered masonry veneer applied directly to masonry or concrete shall comply with the applicable requirements of Section 1405.10 and with the requirements of Section 1405.10.1.4 or 2510.7.

[BS] 1405.10.1.6 Cold weather construction. Cold weather construction of adhered masonry veneer shall comply with the requirements of Sections 2104 and 2512.4.

[BS] 1405.10.1.7 Hot weather construction. Hot weather construction of adhered masonry veneer shall comply with the requirements of Section 2104.

[BS] 1405.10.2 Exterior adhered masonry veneers—porcelain tile. Adhered units shall not exceed $^5/_8$ inch (15.8 mm) thickness and 24 inches (610 mm) in any face dimension nor more than 3 square feet (0.28 m^2) in total face area and shall not weigh more than 9 pounds psf (0.43 kN/m^2). Porcelain tile shall be adhered to an approved backing system.

[BS] 1405.10.3 Interior adhered masonry veneers. Interior adhered masonry veneers shall have a maximum weight of 20 psf (0.958 kg/m^2) and shall be installed in accordance with Section 1405.10. Where the interior adhered masonry veneer is supported by wood construction, the supporting members shall be designed to limit deflection to $^1/_{600}$ of the span of the supporting members.

[BS] 1405.11 Metal veneers. Veneers of metal shall be fabricated from *approved* corrosion-resistant materials or shall be protected front and back with porcelain enamel, or otherwise be treated to render the metal resistant to corrosion. Such veneers shall be not less than 0.0149-inch (0.378 mm) nominal thickness sheet steel mounted on wood or metal furring strips or approved sheathing on light-frame construction.

[BS] 1405.11.1 Attachment. Exterior metal veneer shall be securely attached to the supporting masonry or framing members with corrosion-resistant fastenings, metal ties or by other *approved* devices or methods. The spacing of the fastenings or ties shall not exceed 24 inches (610 mm) either vertically or horizontally, but where units exceed 4 square feet (0.4 m^2) in area there shall be not less than four attachments per unit. The metal attachments shall have a cross-sectional area not less than provided by W 1.7 wire. Such attachments and their supports shall be designed and constructed to resist the wind loads as specified in Section 1609 for components and cladding.

1405.11.2 Weather protection. Metal supports for exterior metal veneer shall be protected by painting, galvanizing or by other equivalent coating or treatment. Wood studs, furring strips or other wood supports for exterior metal veneer shall be *approved* pressure-treated wood or protected as required in Section 1403.2. Joints and edges exposed to the weather shall be caulked with *approved* durable waterproofing material or by other *approved* means to prevent penetration of moisture.

1405.11.3 Backup. Masonry backup shall not be required for metal veneer unless required by the fire-resistance requirements of this code.

1405.11.4 Grounding. Grounding of metal veneers on buildings shall comply with the requirements of Chapter 27 of this code.

[BS] 1405.12 Glass veneer. The area of a single section of thin exterior structural glass veneer shall not exceed 10 square feet (0.93 m^2) where that section is not more than 15 feet (4572 mm) above the level of the sidewalk or grade level directly below, and shall not exceed 6 square feet (0.56 m^2) where it is more than 15 feet (4572 mm) above that level.

[BS] 1405.12.1 Length and height. The length or height of any section of thin exterior structural glass veneer shall not exceed 48 inches (1219 mm).

[BS] 1405.12.2 Thickness. The thickness of thin exterior structural glass veneer shall be not less than 0.344 inch (8.7 mm).

[BS] 1405.12.3 Application. Thin exterior structural glass veneer shall be set only after backing is thoroughly dry and after application of an *approved* bond coat uniformly over the entire surface of the backing so as to effectively seal the surface. Glass shall be set in place with an *approved* mastic cement in sufficient quantity so that at least 50 percent of the area of each glass unit is directly bonded to the backing by mastic not less than $^1/_4$ inch (6.4

mm) thick and not more than $^5/_8$ inch (15.9 mm) thick. The bond coat and mastic shall be evaluated for compatibility and shall bond firmly together.

[BS] 1405.12.4 Installation at sidewalk level. Where glass extends to a sidewalk surface, each section shall rest in an *approved* metal molding, and be set at least $^1/_4$ inch (6.4 mm) above the highest point of the sidewalk. The space between the molding and the sidewalk shall be thoroughly caulked and made water tight.

[BS] 1405.12.4.1 Installation above sidewalk level. Where thin exterior structural glass veneer is installed above the level of the top of a bulkhead facing, or at a level more than 36 inches (914 mm) above the sidewalk level, the mastic cement binding shall be supplemented with *approved* nonferrous metal shelf angles located in the horizontal joints in every course. Such shelf angles shall be not less than 0.0478-inch (1.2 mm) thick and not less than 2 inches (51 mm) long and shall be spaced at *approved* intervals, with not less than two angles for each glass unit. Shelf angles shall be secured to the wall or backing with expansion bolts, toggle bolts or by other *approved* methods.

[BS] 1405.12.5 Joints. Unless otherwise specifically *approved* by the *building official*, abutting edges of thin exterior structural glass veneer shall be ground square. Mitered joints shall not be used except where specifically *approved* for wide angles. Joints shall be uniformly buttered with an *approved* jointing compound and horizontal joints shall be held to not less than 0.063 inch (1.6 mm) by an *approved* nonrigid substance or device. Where thin exterior structural glass veneer abuts nonresilient material at sides or top, expansion joints not less than $^1/_4$ inch (6.4 mm) wide shall be provided.

[BS] 1405.12.6 Mechanical fastenings. Thin exterior structural glass veneer installed above the level of the heads of show windows and veneer installed more than 12 feet (3658 mm) above sidewalk level shall, in addition to the mastic cement and shelf angles, be held in place by the use of fastenings at each vertical or horizontal edge, or at the four corners of each glass unit. Fastenings shall be secured to the wall or backing with expansion bolts, toggle bolts or by other methods. Fastenings shall be so designed as to hold the glass veneer in a vertical plane independent of the mastic cement. Shelf angles providing both support and fastenings shall be permitted.

[BS] 1405.12.7 Flashing. Exposed edges of thin exterior structural glass veneer shall be flashed with overlapping corrosion-resistant metal flashing and caulked with a waterproof compound in a manner to effectively prevent the entrance of moisture between the glass veneer and the backing.

1405.13 Exterior windows and doors. Windows and doors installed in exterior walls shall conform to the testing and performance requirements of Section 1709.5.

1405.13.1 Installation. Windows and doors shall be installed in accordance with *approved* manufacturer's instructions. Fastener size and spacing shall be provided in such instructions and shall be calculated based on maximum loads and spacing used in the tests.

[BS] 1405.14 Vinyl siding. Vinyl siding conforming to the requirements of this section and complying with ASTM D 3679 shall be permitted on exterior walls of buildings located in areas where V_{asd} as determined in accordance with Section 1609.3.1 does not exceed 100 miles per hour (45 m/s) and the *building height* is less than or equal to 40 feet (12 192 mm) in Exposure C. Where construction is located in areas where V_{asd} as determined in accordance with Section 1609.3.1 exceeds 100 miles per hour (45 m/s), or building heights are in excess of 40 feet (12 192 mm), tests or calculations indicating compliance with Chapter 16 shall be submitted. Vinyl siding shall be secured to the building so as to provide weather protection for the exterior walls of the building.

[BS] 1405.14.1 Application. The siding shall be applied over sheathing or materials listed in Section 2304.6. Siding shall be applied to conform to the *water-resistive barrier* requirements in Section 1403. Siding and accessories shall be installed in accordance with *approved* manufacturer's instructions. Unless otherwise specified in the *approved* manufacturer's instructions, nails used to fasten the siding and accessories shall have a minimum 0.313-inch (7.9 mm) head diameter and $^1/_8$-inch (3.18 mm) shank diameter. The nails shall be corrosion resistant and shall be long enough to penetrate the studs or nailing strip at least $^3/_4$ inch (19 mm). For cold-formed steel light-frame construction, corrosion-resistant fasteners shall be used. Screw fasteners shall penetrate the cold-formed steel framing at least three exposed threads. Other fasteners shall be installed in accordance with the approved construction documents and manufacturer's instructions. Where the siding is installed horizontally, the fastener spacing shall not exceed 16 inches (406 mm) horizontally and 12 inches (305 mm) vertically. Where the siding is installed vertically, the fastener spacing shall not exceed 12 inches (305 mm) horizontally and 12 inches (305 mm) vertically.

[BS] 1405.15 Cement plaster. Cement plaster applied to exterior walls shall conform to the requirements specified in Chapter 25.

[BS] 1405.16 Fiber-cement siding. Fiber-cement siding complying with Section 1404.10 shall be permitted on exterior walls of Type I, II, III, IV and V construction for wind pressure resistance or wind speed exposures as indicated by the manufacturer's listing and *label* and *approved* installation instructions. Where specified, the siding shall be installed over sheathing or materials *listed* in Section 2304.6 and shall be installed to conform to the *water-resistive barrier* requirements in Section 1403. Siding and accessories shall be installed in accordance with *approved* manufacturer's instructions. Unless otherwise specified in the *approved* manufacturer's instructions, nails used to fasten the siding to wood studs shall be corrosion-resistant round head smooth shank and shall be long enough to penetrate the studs at least 1 inch (25 mm). For cold-formed steel light-frame construction, corrosion-resistant fasteners shall be used. Screw fasteners shall penetrate the cold-formed steel framing at least three exposed full threads. Other fasteners shall be installed in

accordance with the approved construction documents and manufacturer's instructions.

[BS] 1405.16.1 Panel siding. Fiber-cement panels shall comply with the requirements of ASTM C 1186, Type A, minimum Grade II (or ISO 8336, Category A, minimum Class 2). Panels shall be installed with the long dimension either parallel or perpendicular to framing. Vertical and horizontal joints shall occur over framing members and shall be protected with caulking, with battens or flashing, or be vertical or horizontal shiplap or otherwise designed to comply with Section 1403.2. Panel siding shall be installed with fasteners in accordance with the *approved* manufacturer's instructions.

[BS] 1405.16.2 Lap siding. Fiber-cement lap siding having a maximum width of 12 inches (305 mm) shall comply with the requirements of ASTM C 1186, Type A, minimum Grade II (or ISO 8336, Category A, minimum Class 2). Lap siding shall be lapped a minimum of $1^1/_4$ inches (32 mm) and lap siding not having tongue-and-groove end joints shall have the ends protected with caulking, covered with an H-section joint cover, located over a strip of flashing or shall be otherwise designed to comply with Section 1403.2. Lap siding courses shall be installed with the fastener heads exposed or concealed in accordance with the *approved* manufacturer's instructions.

[BS] 1405.17 Fastening. Weather boarding and wall coverings shall be securely fastened with aluminum, copper, zinc, zinc-coated or other *approved* corrosion-resistant fasteners in accordance with the nailing schedule in Table 2304.10.1 or the *approved* manufacturer's instructions. Shingles and other weather coverings shall be attached with appropriate standard-shingle nails to furring strips securely nailed to studs, or with *approved* mechanically bonding nails, except where sheathing is of wood not less than 1-inch (25 mm) nominal thickness or of wood structural panels as specified in Table 2308.9.3(3).

[BS] 1405.18 Polypropylene siding. Polypropylene siding conforming to the requirements of this section and complying with Section 1404.12 shall be limited to exterior walls of Type VB construction located in areas where the wind speed specified in Chapter 16 does not exceed 100 miles per hour (45 m/s) and the building height is less than or equal to 40 feet (12 192 mm) in Exposure C. Where construction is located in areas where the basic wind speed exceeds 100 miles per hour (45 m/s), or building heights are in excess of 40 feet (12 192 mm), tests or calculations indicating compliance with Chapter 16 shall be submitted. Polypropylene siding shall be installed in accordance with the manufacturer's instructions. Polypropylene siding shall be secured to the building so as to provide weather protection for the exterior walls of the building.

SECTION 1406
COMBUSTIBLE MATERIALS ON THE EXTERIOR SIDE OF EXTERIOR WALLS

1406.1 General. Section 1406 shall apply to *exterior wall coverings*; balconies and similar projections; and bay and oriel windows constructed of combustible materials.

1406.2 Combustible exterior wall coverings. Combustible *exterior wall coverings* shall comply with this section.

Exception: Plastics complying with Chapter 26.

1406.2.1 Type I, II, III and IV construction. On buildings of Type I, II, III and IV construction, exterior wall coverings shall be permitted to be constructed of combustible materials, complying with the following limitations:

1. Combustible exterior wall coverings shall not exceed 10 percent of an exterior wall surface area where the fire separation distance is 5 feet (1524 mm) or less.
2. Combustible exterior wall coverings shall be limited to 40 feet (12 192 mm) in height above grade plane.
3. Combustible exterior wall coverings constructed of fire-retardant-treated wood complying with Section 2303.2 for exterior installation shall not be limited in wall surface area where the fire separation distance is 5 feet (1524 mm) or less and shall be permitted up to 60 feet (18 288 mm) in height above grade plane regardless of the fire separation distance.
4. Wood veneers shall comply with Section 1405.5.

1406.2.1.1 Ignition resistance. Where permitted by Section 1406.2.1, combustible exterior wall coverings shall be tested in accordance with NFPA 268.

Exceptions:

1. Wood or wood-based products.
2. Other combustible materials covered with an exterior weather covering, other than vinyl sidings, included in and complying with the thickness requirements of Table 1405.2.
3. Aluminum having a minimum thickness of 0.019 inch (0.48 mm).

1406.2.1.1.1 Fire separation 5 feet or less. Where installed on exterior walls having a fire separation distance of 5 feet (1524 mm) or less, combustible exterior wall coverings shall not exhibit sustained flaming as defined in NFPA 268.

1406.2.1.1.2 Fire separation greater than 5 feet. For fire separation distances greater than 5 feet (1524 mm), any exterior wall covering shall be permitted that has been exposed to a reduced level of incident radiant heat flux in accordance with the NFPA 268 test method without exhibiting sustained flaming. The minimum fire separation distance required for the exterior wall covering shall be determined from Table 1406.2.1.1.2 based on the maximum tolerable level of incident radiant heat flux that does not cause sustained flaming of the exterior wall covering.

TABLE 1406.2.1.1.2
MINIMUM FIRE SEPARATION FOR COMBUSTIBLE EXTERIOR WALL COVERINGS

FIRE SEPARATION DISTANCE (feet)	TOLERABLE LEVEL INCIDENT RADIANT HEAT ENERGY (kW/m²)	FIRE SEPARATION DISTANCE (feet)	TOLERABLE LEVEL INCIDENT RADIANT HEAT ENERGY (kW/m²)
5	12.5	16	5.9
6	11.8	17	5.5
7	11.0	18	5.2
8	10.3	19	4.9
9	9.6	20	4.6
10	8.9	21	4.4
11	8.3	22	4.1
12	7.7	23	3.9
13	7.2	24	3.7
14	6.7	25	3.5
15	6.3		

For SI: 1 foot = 304.8 mm, 1 Btu/H² × °F = 0.0057 kW/m² × K.

1406.2.2 Location. Combustible exterior wall coverings located along the top of exterior walls shall be completely backed up by the exterior wall and shall not extend over or above the top of the exterior wall.

1406.2.3 Fireblocking. Where the combustible exterior wall covering is furred out from the exterior wall and forms a solid surface, the distance between the back of the exterior wall covering and the exterior wall shall not exceed $1^5/_8$ inches (41 mm). The concealed space thereby created shall be fireblocked in accordance with Section 718.

Exception: The distance between the back of the exterior wall covering and the exterior wall shall be permitted to exceed $1^5/_8$ inches (41 mm) where the concealed space is not required to be fireblocked by Section 718.

1406.3 Balconies and similar projections. Balconies and similar projections of combustible construction other than fire-retardant-treated wood shall be fire-resistance rated where required by Table 601 for floor construction or shall be of Type IV construction in accordance with Section 602.4. The aggregate length of the projections shall not exceed 50 percent of the building's perimeter on each floor.

Exceptions:

1. On buildings of Type I and II construction, three stories or less above *grade plane*, *fire-retardant-treated wood* shall be permitted for balconies, porches, decks and exterior stairways not used as required exits.
2. Untreated wood is permitted for pickets and rails or similar guardrail devices that are limited to 42 inches (1067 mm) in height.
3. Balconies and similar projections on buildings of Type III, IV and V construction shall be permitted to be of Type V construction, and shall not be required to have a *fire-resistance rating* where sprinkler protection is extended to these areas.
4. Where sprinkler protection is extended to the balcony areas, the aggregate length of the balcony on each floor shall not be limited.

1406.4 Bay and oriel windows. Bay and oriel windows shall conform to the type of construction required for the building to which they are attached.

Exception: *Fire-retardant-treated wood* shall be permitted on buildings three stories or less above grade plane of Type I, II, III or IV construction.

SECTION 1407
METAL COMPOSITE MATERIALS (MCM)

1407.1 General. The provisions of this section shall govern the materials, construction and quality of metal composite materials (MCM) for use as *exterior wall coverings* in addition to other applicable requirements of Chapters 14 and 16.

1407.2 Exterior wall finish. MCM used as *exterior wall* finish or as elements of balconies and similar projections and bay and oriel windows to provide cladding or weather resistance shall comply with Sections 1407.4 through 1407.14.

1407.3 Architectural trim and embellishments. MCM used as architectural *trim* or embellishments shall comply with Sections 1407.7 through 1407.14.

1407.4 Structural design. MCM systems shall be designed and constructed to resist wind loads as required by Chapter 16 for components and cladding.

1407.5 Approval. Results of *approved* tests or an engineering analysis shall be submitted to the *building official* to verify compliance with the requirements of Chapter 16 for wind loads.

1407.6 Weather resistance. MCM systems shall comply with Section 1403 and shall be designed and constructed to resist wind and rain in accordance with this section and the manufacturer's installation instructions.

1407.7 Durability. MCM systems shall be constructed of *approved* materials that maintain the performance characteristics required in Section 1407 for the duration of use.

1407.8 Fire-resistance rating. Where MCM systems are used on exterior walls required to have a *fire-resistance rating* in accordance with Section 705, evidence shall be submitted to the *building official* that the required *fire-resistance rating* is maintained.

Exception: MCM systems not containing foam plastic insulation, which are installed on the outer surface of a fire-resistance-rated *exterior wall* in a manner such that the attachments do not penetrate through the entire *exterior wall* assembly, shall not be required to comply with this section.

1407.9 Surface-burning characteristics. Unless otherwise specified, MCM shall have a *flame spread index* of 75 or less and a smoke-developed index of 450 or less when tested in the maximum thickness intended for use in accordance with ASTM E 84 or UL 723.

1407.10 Type I, II, III and IV construction. Where installed on buildings of Type I, II, III and IV construction, MCM systems shall comply with Sections 1407.10.1 through 1407.10.4, or Section 1407.11.

1407.10.1 Surface-burning characteristics. MCM shall have a *flame spread index* of not more than 25 and a smoke-developed index of not more than 450 when tested as an assembly in the maximum thickness intended for use in accordance with ASTM E 84 or UL 723.

1407.10.2 Thermal barriers. MCM shall be separated from the interior of a building by an approved thermal barrier consisting of $^1/_2$ -inch (12.7 mm) gypsum wallboard or a material that is tested in accordance with and meets the acceptance criteria of both the Temperature Transmission Fire Test and the Integrity Fire Test of NFPA 275.

1407.10.3 Thermal barrier not required. The thermal barrier specified for MCM in Section 1407.10.2 is not required where:

1. The MCM system is specifically approved based on tests conducted in accordance with NFPA 286 and with the acceptance criteria of Section 803.1.2.1, UL 1040 or UL 1715. Such testing shall be performed with the MCM in the maximum thickness intended for use. The MCM system shall include seams, joints and other typical details used in the installation and shall be tested in the manner intended for use.
2. The MCM is used as elements of balconies and similar projections, architectural *trim* or embellishments.

1407.10.4 Full-scale tests. The MCM system shall be tested in accordance with, and comply with, the acceptance criteria of NFPA 285. Such testing shall be performed on the MCM system with the MCM in the maximum thickness intended for use.

1407.11 Alternate conditions. MCM and MCM systems shall not be required to comply with Sections 1407.10.1 through 1407.10.4 provided such systems comply with Section 1407.11.1, 1407.11.2, 1407.11.3 or 1407.11.4.

1407.11.1 Installations up to 40 feet in height. MCM shall not be installed more than 40 feet (12 190 mm) in height above grade where installed in accordance with Sections 1407.11.1.1 and 1407.11.1.2.

1407.11.1.1 Fire separation distance of 5 feet or less. Where the *fire separation distance* is 5 feet (1524 mm) or less, the area of MCM shall not exceed 10 percent of the *exterior wall* surface.

1407.11.1.2 Fire separation distance greater than 5 feet. Where the *fire separation distance* is greater than 5 feet (1524 mm), there shall be no limit on the area of *exterior wall* surface coverage using MCM.

1407.11.2 Installations up to 50 feet in height. MCM shall not be installed more than 50 feet (15 240 mm) in height above grade where installed in accordance with Sections 1407.11.2.1 and 1407.11.2.2.

1407.11.2.1 Self-ignition temperature. MCM shall have a self-ignition temperature of 650°F (343°C) or greater when tested in accordance with ASTM D 1929.

1407.11.2.2 Limitations. Sections of MCM shall not exceed 300 square feet (27.9 m^2) in area and shall be separated by not less than 4 feet (1219 mm) vertically.

1407.11.3 Installations up to 75 feet in height (Option 1). MCM shall not be installed more than 75 feet (22 860 mm) in height above grade plane where installed in accordance with Sections 1407.11.3.1 through 1407.11.3.5.

Exception: Buildings equipped throughout with an automatic sprinkler system in accordance with Section 903.3.1.1 shall be exempt from the height limitation.

1407.11.3.1 Prohibited occupancies. MCM shall not be permitted on buildings classified as Group A-1, A-2, H, I-2 or I-3 occupancies.

1407.11.3.2 Nonfire-resistance-rated exterior walls. MCM shall not be permitted on exterior walls required to have a *fire-resistance rating* by other provisions of this code.

1407.11.3.3 Specifications. MCM shall be required to comply with all of the following:

1. MCM shall have a self-ignition temperature of 650°F (343°C) or greater when tested in accordance with ASTM D 1929.
2. MCM shall conform to one of the following combustibility classifications when tested in accordance with ASTM D 635:

   Class CC1: Materials that have a burning extent of 1 inch (25 mm) or less when tested at a nominal thickness of 0.060 inch (1.5 mm) or in the thickness intended for use.

   Class CC2: Materials that have a burning rate of $2^1/_2$ inches per minute (1.06 mm/s) or less when tested at a nominal thickness of 0.060 inch (1.5 mm) or in the thickness intended for use.

1407.11.3.4 Area limitation and separation. The maximum area of a single MCM panel and the minimum vertical and horizontal separation requirements for MCM panels shall be as provided for in Table 1407.11.3.4. The maximum percentage of exterior wall area of any story covered with MCM panels shall not exceed that indicated in Table 1407.11.3.4 or the percentage of unprotected openings permitted by Section 705.8, whichever is smaller.

Exception: In buildings provided with flame barriers complying with Section 705.8.5 and extending 30 inches (760 mm) beyond the exterior wall in the plane of the floor, a vertical separation shall not be required at the floor other than that provided by the vertical thickness of the flame barrier.

1407.11.3.5 Automatic sprinkler system increases. Where the building is equipped throughout with an automatic sprinkler system in accordance with Section

TABLE 1407.11.3.4
AREA LIMITATION AND SEPARATION REQUIREMENTS FOR MCM PANELS

FIRE SEPARATION DISTANCE (feet)	COMBUSTIBILITY CLASS OF MCM	MAXIMUM PERCENTAGE AREA OF EXTERIOR WALL COVERED WITH MCM PANELS	MAXIMUM SINGLE AREA OF MCM PANELS (square feet)	MINIMUM SEPARATION OF MCM PANELS (feet)	
				Vertical	Horizontal
Less than 6	—	Not Permitted	Not Permitted	—	—
6 or more but less than 11	CC1	10	50	8	4
	CC2	Not Permitted	Not Permitted	—	—
11 or more but less than or equal to 30	CC1	25	90	6	4
	CC2	15	70	8	4
More than 30	CC1	50	Not Permitted	3[a]	0
	CC2	50	100	6[a]	3

For SI: 1 foot = 304.8 mm, 1 square foot = 0.0929 m^2.
a. For reductions in the minimum vertical separation, see Section 1407.11.3.4.

903.3.1.1, the maximum percentage area of exterior wall of any story covered with MCM panels and the maximum square footage of a single area of MCM panels in Table 1407.11.3.4 shall be increased 100 percent. The area of MCM panels shall not exceed 50 percent of the exterior wall area of any story or the area permitted by Section 704.8 for unprotected openings, whichever is smaller.

1407.11.4 Installations up to 75 feet in height (Option 2). MCM shall not be installed more than 75 feet (22 860 mm) in height above grade plane where installed in accordance with Sections 1407.11.4.1 through 1407.11.4.4.

Exception: Buildings equipped throughout with an automatic sprinkler system in accordance with Section 903.3.1.1 shall be exempt from the height limitation.

1407.11.4.1 Minimum fire separation distance. MCM shall not be installed on any wall with a fire separation distance less than 30 feet (9 144 mm).

Exception: Where the building is equipped throughout with an *automatic sprinkler system* in accordance with Section 903.3.1.1, the fire separation distance shall be permitted to be reduced to not less than 20 feet (6096 mm).

1407.11.4.2 Specifications. MCM shall be required to comply with all of the following:

1. MCM shall have a self-ignition temperature of 650°F (343°C) or greater when tested in accordance with ASTM D 1929.
2. MCM shall conform to one of the following combustibility classifications when tested in accordance with ASTM D 635:

   Class CC1: Materials that have a burning extent of 1 inch (25 mm) or less when tested at a nominal thickness of 0.060 inch (1.5 mm), or in the thickness intended for use.

   Class CC2: Materials that have a burning rate of $2^1/_2$ inches per minute (1.06 mm/s) or less when tested at a nominal thickness of 0.060 inch (1.5 mm), or in the thickness intended for use.

1407.11.4.3 Area and size limitations. The aggregate area of MCM panels shall not exceed 25 percent of the area of any exterior wall face of the story on which those panels are installed. The area of a single MCM panel installed above the first story above grade plane shall not exceed 16 square feet (1.5 m^2) and the vertical dimension of a single MCM panel shall not exceed 4 feet (1219 mm).

Exception: Where the building is equipped throughout with an *automatic sprinkler system* in accordance with Section 903.3.1.1, the maximum aggregate area of MCM panels shall be increased to 50 percent of the exterior wall face of the story on which those panels are installed and there shall not be a limit on the maximum dimension or area of a single MCM panel.

1407.11.4.4 Vertical separations. Flame barriers complying with Section 705.8 and extending 30 inches (762 mm) beyond the exterior wall or a vertical separation of not less than 4 feet (1219 mm) in height shall be provided to separate MCM panels located on the exterior walls at one-story intervals.

Exception: Buildings equipped throughout with an *automatic sprinkler system* in accordance with Section 903.3.1.1.

1407.12 Type V construction. MCM shall be permitted to be installed on buildings of Type V construction.

1407.13 Foam plastic insulation. MCM systems containing foam plastic insulation shall also comply with the requirements of Section 2603.

1407.14 Labeling. MCM shall be labeled in accordance with Section 1703.5.

SECTION 1408
EXTERIOR INSULATION AND FINISH SYSTEMS (EIFS)

1408.1 General. The provisions of this section shall govern the materials, construction and quality of exterior insulation and finish systems (EIFS) for use as *exterior wall coverings* in addition to other applicable requirements of Chapters 7, 14, 16, 17 and 26.

1408.2 Performance characteristics. EIFS shall be constructed such that it meets the performance characteristics required in ASTM E 2568.

[BS] 1408.3 Structural design. The underlying structural framing and substrate shall be designed and constructed to resist loads as required by Chapter 16.

1408.4 Weather resistance. EIFS shall comply with Section 1403 and shall be designed and constructed to resist wind and rain in accordance with this section and the manufacturer's application instructions.

1408.4.1 EIFS with drainage. EIFS with drainage shall have an average minimum drainage efficiency of 90 percent when tested in accordance the requirements of ASTM E 2273 and is required on framed walls of Type V construction, Group R1, R2, R3 and R4 occupancies.

1408.4.1.1 Water-resistive barrier. For EIFS with drainage, the *water-resistive barrier* shall comply with Section 1404.2 or ASTM E 2570.

1408.5 Installation. Installation of the EIFS and EIFS with drainage shall be in accordance with the EIFS manufacturer's instructions.

1408.6 Special inspections. EIFS installations shall comply with the provisions of Sections 1704.2 and 1705.16.

SECTION 1409
HIGH-PRESSURE DECORATIVE EXTERIOR-GRADE COMPACT LAMINATES (HPL)

1409.1 General. The provisions of this section shall govern the materials, construction and quality of High-Pressure Decorative Exterior-Grade Compact Laminates (HPL) for use as exterior wall coverings in addition to other applicable requirements of Chapters 14 and 16.

1409.2 Exterior wall finish. HPL used as exterior wall covering or as elements of balconies and similar projections and bay and oriel windows to provide cladding or weather resistance shall comply with Sections 1409.4 and 1409.14.

1409.3 Architectural trim and embellishments. HPL used as architectural trim or embellishments shall comply with Sections 1409.7 through 1409.14.

[BS] 1409.4 Structural design. HPL systems shall be designed and constructed to resist wind loads as required by Chapter 16 for components and cladding.

1409.5 Approval. Results of approved tests or an engineering analysis shall be submitted to the building official to verify compliance with the requirements of Chapter 16 for wind loads.

1409.6 Weather resistance. HPL systems shall comply with Section 1403 and shall be designed and constructed to resist wind and rain in accordance with this section and the manufacturer's instructions.

1409.7 Durability. HPL systems shall be constructed of approved materials that maintain the performance characteristics required in Section 1409 for the duration of use.

1409.8 Fire-resistance rating. Where HPL systems are used on exterior walls required to have a *fire-resistance rating* in accordance with Section 705, evidence shall be submitted to the building official that the required *fire-resistance rating* is maintained.

Exception: HPL systems not containing foam plastic insulation, which are installed on the outer surface of a fire-resistance-rated exterior wall in a manner such that the attachments do not penetrate through the entire exterior wall assembly, shall not be required to comply with this section.

1409.9 Surface-burning characteristics. Unless otherwise specified, HPL shall have a flame spread index of 75 or less and a smoke-developed index of 450 or less when tested in the minimum and maximum thicknesses intended for use in accordance with ASTM E 84 or UL 723.

1409.10 Type I, II, III and IV construction. Where installed on buildings of Type I, II, III and IV construction, HPL systems shall comply with Sections 1409.10.1 through 1409.10.4, or Section 1409.11.

1409.10.1 Surface-burning characteristics. HPL shall have a flame spread index of not more than 25 and a smoke-developed index of not more than 450 when tested in the minimum and maximum thicknesses intended for use in accordance with ASTM E 84 or UL 723.

1409.10.2 Thermal barriers. HPL shall be separated from the interior of a building by an approved thermal barrier consisting of $^1/_2$-inch (12.7 mm) gypsum wallboard or a material that is tested in accordance with and meets the acceptance criteria of both the Temperature Transmission Fire Test and the Integrity Fire Test of NFPA 275.

1409.10.3 Thermal barrier not required. The thermal barrier specified for HPL in Section 1409.10.2 is not required where:

1. The HPL system is specifically approved based on tests conducted in accordance with UL 1040 or UL 1715. Such testing shall be performed with the HPL in the minimum and maximum thicknesses intended for use. The HPL system shall include seams, joints and other typical details used in the installation and shall be tested in the manner intended for use.
2. The HPL is used as elements of balconies and similar projections, architectural *trim* or embellishments.

1409.10.4 Full-scale tests. The HPL system shall be tested in accordance with, and comply with, the acceptance criteria of NFPA 285. Such testing shall be performed on the HPL system with the HPL in the minimum and maximum thicknesses intended for use.

1409.11 Alternate conditions. HPL and HPL systems shall not be required to comply with Sections 1409.10.1 through 1409.10.4 provided such systems comply with Section 1409.11.1 or 1409.11.2.

1409.11.1 Installations up to 40 feet in height. HPL shall not be installed more than 40 feet (12 190 mm) in height above grade plane where installed in accordance with Sections 1409.11.1.1 and 1409.11.1.2.

1409.11.1.1 Fire separation distance of 5 feet or less. Where the fire separation distance is 5 feet (1524 mm) or less, the area of HPL shall not exceed 10 percent of the exterior wall surface.

1409.11.1.2 Fire separation distance greater than 5 feet. Where the fire separation distance is greater than 5 feet (1524 mm), there shall be no limit on the area of exterior wall surface coverage using HPL.

1409.11.2 Installations up to 50 feet in height. HPL shall not be installed more than 50 feet (15 240 mm) in height above grade plane where installed in accordance with Sections 1409.11.2.1 and 1409.11.2.2.

1409.11.2.1 Self-ignition temperature. HPL shall have a self-ignition temperature of 650°F (343°C) or greater when tested in accordance with ASTM D 1929.

1409.11.2.2 Limitations. Sections of HPL shall not exceed 300 square feet (27.9 m^2) in area and shall be separated by a minimum 4 feet (1219 mm) vertically.

1409.12 Type V construction. HPL shall be permitted to be installed on buildings of Type V construction.

1409.13 Foam plastic insulation. HPL systems containing foam plastic insulation shall also comply with the requirements of Section 2603.

1409.14 Labeling. HPL shall be labeled in accordance with Section 1703.5.

SECTION 1410
PLASTIC COMPOSITE DECKING

1410.1 Plastic composite decking. Exterior deck boards, stair treads, handrails and guardrail systems constructed of plastic composites, including plastic lumber, shall comply with Section 2612.

CHAPTER 15

ROOF ASSEMBLIES AND ROOFTOP STRUCTURES

User note: Code change proposals to sections preceded by the designation [BF], [BG] or [P] will be considered by one of the code development committees meeting during the 2015 (Group A) Code Development Cycle. All other code change proposals will be considered by the IBC – Structural Code Development Committee during the 2016 (Group B) Code Development Cycle. See explanation on page iv.

SECTION 1501
GENERAL

1501.1 Scope. The provisions of this chapter shall govern the design, materials, construction and quality of roof assemblies, and rooftop structures.

SECTION 1502
DEFINITIONS

1502.1 Definitions. The following terms are defined in Chapter 2:

AGGREGATE.

BALLAST.

BUILDING-INTEGRATED PHOTOVOLTAIC (BIPV) PRODUCT.

BUILT-UP ROOF COVERING.

INTERLAYMENT.

MECHANICAL EQUIPMENT SCREEN.

METAL ROOF PANEL.

METAL ROOF SHINGLE.

MODIFIED BITUMEN ROOF COVERING.

PENTHOUSE.

PHOTOVOLTAIC MODULE.

PHOTOVOLTAIC PANEL.

PHOTOVOLTAIC PANEL SYSTEM.

PHOTOVOLTAIC SHINGLES.

POSITIVE ROOF DRAINAGE.

RADIANT BARRIER.

REROOFING.

ROOF ASSEMBLY.

ROOF COVERING.

ROOF COVERING SYSTEM.

ROOF DECK.

ROOF RECOVER.

ROOF REPAIR.

ROOF REPLACEMENT.

ROOF VENTILATION.

ROOFTOP STRUCTURE.

SCUPPER.

SINGLE-PLY MEMBRANE.

UNDERLAYMENT.

VEGETATIVE ROOF.

SECTION 1503
WEATHER PROTECTION

1503.1 General. Roof decks shall be covered with *approved* roof coverings secured to the building or structure in accordance with the provisions of this chapter. Roof coverings shall be designed and installed in accordance with this code and the *approved* manufacturer's instructions such that the roof covering shall serve to protect the building or structure.

1503.2 Flashing. Flashing shall be installed in such a manner so as to prevent moisture entering the wall and roof through joints in copings, through moisture-permeable materials and at intersections with parapet walls and other penetrations through the roof plane.

1503.2.1 Locations. Flashing shall be installed at wall and roof intersections, at gutters, wherever there is a change in roof slope or direction and around roof openings. Where flashing is of metal, the metal shall be corrosion resistant with a thickness of not less than 0.019 inch (0.483 mm) (No. 26 galvanized sheet).

1503.3 Coping. Parapet walls shall be properly coped with noncombustible, weatherproof materials of a width no less than the thickness of the parapet wall.

[P] 1503.4 Roof drainage. Design and installation of roof drainage systems shall comply with Section 1503 of this code and Sections 1106 and 1108, as applicable, of the *International Plumbing Code*.

[P] 1503.4.1 Secondary (emergency overflow) drains or scuppers. Where roof drains are required, secondary (emergency overflow) roof drains or scuppers shall be provided where the roof perimeter construction extends above the roof in such a manner that water will be entrapped if the primary drains allow buildup for any reason. The installation and sizing of secondary emergency overflow drains, leaders and conductors shall comply with Sections 1106 and 1108, as applicable, of the *International Plumbing Code*.

1503.4.2 Scuppers. When scuppers are used for secondary (emergency overflow) roof drainage, the quantity, size, location and inlet elevation of the scuppers shall be sized to prevent the depth of ponding water from exceeding that for which the roof was designed as determined by Section 1611.1. Scuppers shall not have an opening dimension of less than 4 inches (102 mm). The flow through the primary system shall not be considered when locating and sizing scuppers.

1503.4.3 Gutters. Gutters and leaders placed on the outside of buildings, other than Group R-3, private garages and buildings of Type V construction, shall be of noncombustible material or a minimum of Schedule 40 plastic pipe.

1503.5 Attic and rafter ventilation. Intake and exhaust vents shall be provided in accordance with Section 1203.2 and the vent product manufacturer's installation instructions.

1503.6 Crickets and saddles. A cricket or saddle shall be installed on the ridge side of any chimney or penetration greater than 30 inches (762 mm) wide as measured perpendicular to the slope. Cricket or saddle coverings shall be sheet metal or of the same material as the roof covering.

Exception: Unit skylights installed in accordance with Section 2405.5 and flashed in accordance with the manufacturer's instructions shall be permitted to be installed without a cricket or saddle.

SECTION 1504
PERFORMANCE REQUIREMENTS

1504.1 Wind resistance of roofs. Roof decks and roof coverings shall be designed for wind loads in accordance with Chapter 16 and Sections 1504.2, 1504.3 and 1504.4.

1504.1.1 Wind resistance of asphalt shingles. Asphalt shingles shall be tested in accordance with ASTM D 7158. Asphalt shingles shall meet the classification requirements of Table 1504.1.1 for the appropriate maximum basic wind speed. Asphalt shingle packaging shall bear a label to indicate compliance with ASTM D 7158 and the required classification in Table 1504.1.1.

Exception: Asphalt shingles that are not included in the scope of ASTM D 7158 shall be tested and labeled to indicate compliance with ASTM D 3161 and the required classification in Table 1504.1.1.

1504.2 Wind resistance of clay and concrete tile. Wind loads on clay and concrete tile roof coverings shall be in accordance with Section 1609.5. **

1504.2.1 Testing. Testing of concrete and clay roof tiles shall be in accordance with Sections 1504.2.1.1 and 1504.2.1.2.

1504.2.1.1 Overturning resistance. Concrete and clay roof tiles shall be tested to determine their resistance to overturning due to wind in accordance with SBCCI SSTD 11 and Chapter 15.

1504.2.1.2 Wind tunnel testing. Where concrete and clay roof tiles do not satisfy the limitations in Chapter 16 for rigid tile, a wind tunnel test shall be used to determine the wind characteristics of the concrete or clay tile roof covering in accordance with SBCCI SSTD 11 and Chapter 15.

1504.3 Wind resistance of nonballasted roofs. Roof coverings installed on roofs in accordance with Section 1507 that are mechanically attached or adhered to the roof deck shall be designed to resist the design wind load pressures for components and cladding in accordance with Section 1609.

1504.3.1 Other roof systems. Built-up, modified bitumen, fully adhered or mechanically attached single-ply roof systems, metal panel roof systems applied to a solid or closely fitted deck and other types of membrane roof coverings shall be tested in accordance with FM 4474, UL 580 or UL 1897.

1504.3.2 Structural metal panel roof systems. Where the metal roof panel functions as the roof deck and roof covering and it provides both weather protection and support for loads, the structural metal panel roof system shall comply with this section. Structural standing-seam metal

TABLE 1504.1.1
CLASSIFICATION OF ASPHALT SHINGLES

MAXIMUM BASIC WIND SPEED, V_{ult}, FROM FIGURE 1609A, B, C OR ASCE 7	MAXIMUM BASIC WIND SPEED, V_{asd}, FROM TABLE 1609.3.1	ASTM D 7158[a] CLASSIFICATION	ASTM D 3161 CLASSIFICATION
110	85	D, G or H	A, D or F
116	90	D, G or H	A, D or F
129	100	G or H	A, D or F
142	110	G or H	F
155	120	G or H	F
168	130	H	F
181	140	H	F
194	150	H	F

For SI: 1 foot = 304.8 mm; 1 mph = 0.447 m/s.

a. The standard calculations contained in ASTM D 7158 assume Exposure Category B or C and building height of 60 feet or less. Additional calculations are required for conditions outside of these assumptions.

panel roof systems shall be tested in accordance with ASTM E 1592 or FM 4474. Structural through-fastened metal panel roof systems shall be tested in accordance with FM 4474, UL 580 or ASTM E 1592.

Exceptions:

1. Metal roofs constructed of cold-formed steel shall be permitted to be designed and tested in accordance with the applicable referenced structural design standard in Section 2210.1.
2. Metal roofs constructed of aluminum shall be permitted to be designed and tested in accordance with the applicable referenced structural design standard in Section 2002.1.

1504.4 Ballasted low-slope roof systems. Ballasted low-slope (roof slope < 2:12) single-ply roof system coverings installed in accordance with Sections 1507.12 and 1507.13 shall be designed in accordance with Section 1504.8 and ANSI/SPRI RP-4.

1504.5 Edge securement for low-slope roofs. Low-slope built-up, modified bitumen and single-ply roof system metal edge securement, except gutters, shall be designed and installed for wind loads in accordance with Chapter 16 and tested for resistance in accordance with Test Methods RE-1, RE-2 and RE-3 of ANSI/SPRI ES-1, except V_{ult} wind speed shall be determined from Figure 1609A, 1609B, or 1609C as applicable.

1504.6 Physical properties. Roof coverings installed on low-slope roofs (roof slope < 2:12) in accordance with Section 1507 shall demonstrate physical integrity over the working life of the roof based upon 2,000 hours of exposure to accelerated weathering tests conducted in accordance with ASTM G 152, ASTM G 155 or ASTM G 154. Those roof coverings that are subject to cyclical flexural response due to wind loads shall not demonstrate any significant loss of tensile strength for unreinforced membranes or breaking strength for reinforced membranes when tested as herein required.

1504.7 Impact resistance. Roof coverings installed on low-slope roofs (roof slope < 2:12) in accordance with Section 1507 shall resist impact damage based on the results of tests conducted in accordance with ASTM D 3746, ASTM D 4272, CGSB 37-GP-52M or the "Resistance to Foot Traffic Test" in Section 5.5 of FM 4470.

1504.8 Aggregate. Aggregate used as surfacing for roof coverings and aggregate, gravel or stone used as ballast shall not be used on the roof of a building located in a hurricane-prone region as defined in Section 202, or on any other building with a mean roof height exceeding that permitted by Table 1504.8 based on the exposure category and basic wind speed at the site.

TABLE 1504.8
MAXIMUM ALLOWABLE MEAN ROOF HEIGHT PERMITTED FOR BUILDINGS WITH AGGREGATE ON THE ROOF IN AREAS OUTSIDE A HURRICANE-PRONE REGION

NOMINAL DESIGN WIND SPEED, V_{asd} (mph)[b, d]	MAXIMUM MEAN ROOF HEIGHT (ft)[a, c]		
	Exposure category		
	B	C	D
85	170	60	30
90	110	35	15
95	75	20	NP
100	55	15	NP
105	40	NP	NP
110	30	NP	NP
115	20	NP	NP
120	15	NP	NP
Greater than 120	NP	NP	NP

For SI: 1 foot = 304.8 mm; 1 mile per hour = 0.447 m/s.

a. Mean roof height as defined in ASCE 7.

b. For intermediate values of V_{asd}, the height associated with the next higher value of V_{asd} shall be used, or direct interpolation is permitted.

c. NP = gravel and stone not permitted for any roof height.

d. V_{asd} shall be determined in accordance with Section 1609.3.1.

SECTION 1505
FIRE CLASSIFICATION

[BF] 1505.1 General. Roof assemblies shall be divided into the classes defined below. Class A, B and C roof assemblies and roof coverings required to be listed by this section shall be tested in accordance with ASTM E 108 or UL 790. In addition, *fire-retardant-treated wood* roof coverings shall be tested in accordance with ASTM D 2898. The minimum roof coverings installed on buildings shall comply with Table 1505.1 based on the type of construction of the building.

Exception: Skylights and sloped glazing that comply with Chapter 24 or Section 2610.

TABLE 1505.1[a, b]
MINIMUM ROOF COVERING CLASSIFICATION FOR TYPES OF CONSTRUCTION

IA	IB	IIA	IIB	IIIA	IIIB	IV	VA	VB
B	B	B	C[c]	B	C[c]	B	B	C[c]

For SI: 1 foot = 304.8 mm, 1 square foot = 0.0929 m^2.

a. Unless otherwise required in accordance with the *International Wildland-Urban Interface Code* or due to the location of the building within a fire district in accordance with Appendix D.

b. Nonclassified roof coverings shall be permitted on buildings of Group R-3 and Group U occupancies, where there is a minimum fire-separation distance of 6 feet measured from the leading edge of the roof.

c. Buildings that are not more than two stories above grade plane and having not more than 6,000 square feet of projected roof area and where there is a minimum 10-foot fire-separation distance from the leading edge of the roof to a lot line on all sides of the building, except for street fronts or public ways, shall be permitted to have roofs of No. 1 cedar or redwood shakes and No. 1 shingles constructed in accordance with Section 1505.7.

[BF] 1505.2 Class A roof assemblies. Class A roof assemblies are those that are effective against severe fire test exposure. Class A roof assemblies and roof coverings shall be *listed* and identified as Class A by an *approved* testing agency. Class A roof assemblies shall be permitted for use in buildings or structures of all types of construction.

Exceptions:

1. Class A roof assemblies include those with coverings of brick, masonry or an exposed concrete roof deck.
2. Class A roof assemblies also include ferrous or copper shingles or sheets, metal sheets and shingles, clay or concrete roof tile or slate installed on noncombustible decks or ferrous, copper or metal sheets installed without a roof deck on noncombustible framing.
3. Class A roof assemblies include minimum 16 ounce per square foot (0.0416 kg/m^2) copper sheets installed over combustible decks.
4. Class A roof assemblies include slate installed over ASTM D 226, Type II underlayment over combustible decks.

[BF] 1505.3 Class B roof assemblies. Class B roof assemblies are those that are effective against moderate fire-test exposure. Class B roof assemblies and roof coverings shall be *listed* and identified as Class B by an *approved* testing agency.

[BF] 1505.4 Class C roof assemblies. Class C roof assemblies are those that are effective against light fire-test exposure. Class C roof assemblies and roof coverings shall be *listed* and identified as Class C by an *approved* testing agency.

[BF] 1505.5 Nonclassified roofing. Nonclassified roofing is *approved* material that is not *listed* as a Class A, B or C roof covering.

[BF] 1505.6 Fire-retardant-treated wood shingles and shakes. *Fire-retardant-treated wood* shakes and shingles shall be treated by impregnation with chemicals by the full-cell vacuum-pressure process, in accordance with AWPA C1. Each bundle shall be marked to identify the manufactured unit and the manufacturer, and shall also be *labeled* to identify the classification of the material in accordance with the testing required in Section 1505.1, the treating company and the quality control agency.

[BF] 1505.7 Special purpose roofs. Special purpose wood shingle or wood shake roofing shall conform to the grading and application requirements of Section 1507.8 or 1507.9. In addition, an underlayment of $^5/_8$-inch (15.9 mm) Type X water-resistant gypsum backing board or gypsum sheathing shall be placed under minimum nominal $^1/_2$-inch-thick (12.7 mm) wood structural panel solid sheathing or 1-inch (25 mm) nominal spaced sheathing.

[BF] 1505.8 Building-integrated photovoltaic products. *Building-integrated photovoltaic products* installed as the roof covering shall be tested, *listed* and *labeled* for fire classification in accordance with Section 1505.1.

[BF] 1505.9 Photovoltaic panels and modules. Rooftop-mounted *photovoltaic panel systems* shall be tested, *listed* and identified with a fire classification in accordance with UL 1703. The fire classification shall comply with Table 1505.1 based on the type of construction of the building.

[BF] 1505.10 Roof gardens and landscaped roofs. Roof gardens and landscaped roofs shall comply with Section 1507.16 and shall be installed in accordance with ANSI/SPRI VF-1.

SECTION 1506
MATERIALS

1506.1 Scope. The requirements set forth in this section shall apply to the application of roof-covering materials specified herein. Roof coverings shall be applied in accordance with this chapter and the manufacturer's installation instructions. Installation of roof coverings shall comply with the applicable provisions of Section 1507.

1506.2 Material specifications and physical characteristics. Roof-covering materials shall conform to the applicable standards listed in this chapter.

1506.3 Product identification. Roof-covering materials shall be delivered in packages bearing the manufacturer's identifying marks and *approved* testing agency labels required in accordance with Section 1505. Bulk shipments of materials shall be accompanied with the same information issued in the form of a certificate or on a bill of lading by the manufacturer.

SECTION 1507
REQUIREMENTS FOR ROOF COVERINGS

1507.1 Scope. Roof coverings shall be applied in accordance with the applicable provisions of this section and the manufacturer's installation instructions.

1507.2 Asphalt shingles. The installation of asphalt shingles shall comply with the provisions of this section.

1507.2.1 Deck requirements. Asphalt shingles shall be fastened to solidly sheathed decks.

1507.2.2 Slope. Asphalt shingles shall only be used on roof slopes of two units vertical in 12 units horizontal (17-percent slope) or greater. For roof slopes from two units vertical in 12 units horizontal (17-percent slope) up to four units vertical in 12 units horizontal (33-percent slope), double underlayment application is required in accordance with Section 1507.2.8.

1507.2.3 Underlayment. Unless otherwise noted, required underlayment shall conform to ASTM D 226, Type I, ASTM D 4869, Type I, or ASTM D 6757.

1507.2.4 Self-adhering polymer modified bitumen sheet. Self-adhering polymer modified bitumen sheet shall comply with ASTM D 1970.

1507.2.5 Asphalt shingles. Asphalt shingles shall comply with ASTM D 225 or ASTM D 3462.

1507.2.6 Fasteners. Fasteners for asphalt shingles shall be galvanized, stainless steel, aluminum or copper roofing nails, minimum 12-gage [0.105 inch (2.67 mm)] shank with a minimum $^3/_8$-inch-diameter (9.5 mm) head, of a length to penetrate through the roofing materials and a minimum of $^3/_4$ inch (19.1 mm) into the roof sheathing. Where the roof sheathing is less than $^3/_4$ inch (19.1 mm) thick, the nails shall penetrate through the sheathing. Fasteners shall comply with ASTM F 1667.

1507.2.7 Attachment. Asphalt shingles shall have the minimum number of fasteners required by the manufacturer, but not less than four fasteners per strip shingle or two fasteners per individual shingle. Where the roof slope exceeds 21 units vertical in 12 units horizontal (21:12), shingles shall be installed as required by the manufacturer.

1507.2.8 Underlayment application. For roof slopes from two units vertical in 12 units horizontal (17-percent slope) and up to four units vertical in 12 units horizontal (33-percent slope), underlayment shall be two layers applied in the following manner. Apply a minimum 19-inch-wide (483 mm) strip of underlayment felt parallel with and starting at the eaves, fastened sufficiently to hold in place. Starting at the eave, apply 36-inch-wide (914 mm) sheets of underlayment overlapping successive sheets 19 inches (483 mm) and fasten sufficiently to hold in place. Distortions in the underlayment shall not interfere with the ability of the shingles to seal. For roof slopes of four units vertical in 12 units horizontal (33-percent slope) or greater, underlayment shall be one layer applied in the following manner. Underlayment shall be applied shingle fashion, parallel to and starting from the eave and lapped 2 inches (51 mm), fastened sufficiently to hold in place. Distortions in the underlayment shall not interfere with the ability of the shingles to seal.

1507.2.8.1 High wind attachment. Underlayment applied in areas subject to high winds [V_{asd} greater than 110 mph (49 m/s) as determined in accordance with Section 1609.3.1] shall be applied with corrosion-resistant fasteners in accordance with the manufacturer's instructions. Fasteners are to be applied along the overlap not more than 36 inches (914 mm) on center.

Underlayment installed where V_{asd}, in accordance with Section 1609.3.1, equals or exceeds 120 mph (54 m/s) shall comply with ASTM D 226 Type II, ASTM D 4869 Type IV, or ASTM D 6757. The underlayment shall be attached in a grid pattern of 12 inches (305 mm) between side laps with a 6-inch (152 mm) spacing at the side laps. Underlayment shall be applied in accordance with Section 1507.2.8 except all laps shall be a minimum of 4 inches (102 mm). Underlayment shall be attached using metal or plastic cap nails with a head diameter of not less than 1 inch (25 mm) with a thickness of at least 32-gage [0.0134 inch (0.34 mm)] sheet metal. The cap nail shank shall be a minimum of 12 gage [0.105 inch (2.67 mm)] with a length to penetrate through the roof sheathing or a minimum of $^3/_4$ inch (19.1 mm) into the roof sheathing.

Exception: As an alternative, adhered underlayment complying with ASTM D 1970 shall be permitted.

1507.2.8.2 Ice barrier. In areas where there has been a history of ice forming along the eaves causing a backup of water, an ice barrier that consists of at least two layers of underlayment cemented together or of a self-adhering polymer modified bitumen sheet shall be used in lieu of normal underlayment and extend from the lowest edges of all roof surfaces to a point at least 24 inches (610 mm) inside the *exterior wall* line of the building.

Exception: Detached accessory structures that contain no conditioned floor area.

1507.2.9 Flashings. Flashing for asphalt shingles shall comply with this section. Flashing shall be applied in accordance with this section and the asphalt shingle manufacturer's printed instructions.

1507.2.9.1 Base and cap flashing. Base and cap flashing shall be installed in accordance with the manufacturer's instructions. Base flashing shall be of either corrosion-resistant metal of minimum nominal 0.019-inch (0.483 mm) thickness or mineral-surfaced roll roofing weighing a minimum of 77 pounds per 100 square feet (3.76 kg/m^2). Cap flashing shall be corrosion-resistant metal of minimum nominal 0.019-inch (0.483 mm) thickness.

1507.2.9.2 Valleys. Valley linings shall be installed in accordance with the manufacturer's instructions before applying shingles. Valley linings of the following types shall be permitted:

1. For open valleys (valley lining exposed) lined with metal, the valley lining shall be at least 24 inches (610 mm) wide and of any of the corrosion-resistant metals in Table 1507.2.9.2.
2. For open valleys, valley lining of two plies of mineral-surfaced roll roofing complying with ASTM D 3909 or ASTM D 6380 shall be permitted. The bottom layer shall be 18 inches (457 mm) and the top layer a minimum of 36 inches (914 mm) wide.
3. For closed valleys (valleys covered with shingles), valley lining of one ply of smooth roll roofing complying with ASTM D 6380, and at least 36 inches (914 mm) wide or types as described in Item 1 or 2 above shall be permitted. Self-adhering polymer modified bitumen underlayment complying with ASTM D 1970 shall be permitted in lieu of the lining material.

1507.2.9.3 Drip edge. A drip edge shall be provided at eaves and rake edges of shingle roofs. Adjacent segments of the drip edge shall be lapped a minimum of 2 inches (51 mm). The vertical leg of drip edges shall be a minimum of $1^1/_2$ inches (38 mm) in width and shall extend a minimum of $^1/_4$ inch (6.4 mm) below sheathing. The drip edge shall extend back on the roof a minimum of 2 inches (51 mm). Underlayment shall be installed over drip edges along eaves. Drip edges shall

TABLE 1507.2.9.2
VALLEY LINING MATERIAL

MATERIAL	MINIMUM THICKNESS	GAGE	WEIGHT
Aluminum	0.024 in.	—	—
Cold-rolled copper	0.0216 in.	—	ASTM B 370, 16 oz. per square ft.
Copper	—	—	16 oz
Galvanized steel	0.0179 in.	26 (zinc-coated G90)	—
High-yield copper	0.0162 in.	—	ASTM B 370, 12 oz. per square ft.
Lead	—	—	2.5 pounds
Lead-coated copper	0.0216 in.	—	ASTM B 101, 16 oz. per square ft.
Lead-coated high-yield copper	0.0162 in.	—	ASTM B 101, 12 oz. per square ft.
Painted terne	—	—	20 pounds
Stainless steel	—	28	—
Zinc alloy	0.027 in.	—	—

For SI: 1 inch = 25.4 mm, 1 pound = 0.454 kg, 1 ounce = 28.35 g, 1 square foot = 0.0929 m^2.

be installed over underlayment along rake edges. Drip edges shall be mechanically fastened a maximum of 12 inches (305 mm) on center.

1507.3 Clay and concrete tile. The installation of clay and concrete tile shall comply with the provisions of this section.

1507.3.1 Deck requirements. Concrete and clay tile shall be installed only over solid sheathing or spaced structural sheathing boards.

1507.3.2 Deck slope. Clay and concrete roof tile shall be installed on roof slopes of $2^1/_2$ units vertical in 12 units horizontal (21-percent slope) or greater. For roof slopes from $2^1/_2$ units vertical in 12 units horizontal (21-percent slope) to four units vertical in 12 units horizontal (33-percent slope), double underlayment application is required in accordance with Section 1507.3.3.

1507.3.3 Underlayment. Unless otherwise noted, required underlayment shall conform to: ASTM D 226, Type II; ASTM D 2626 or ASTM D 6380, Class M mineral-surfaced roll roofing.

1507.3.3.1 Low-slope roofs. For roof slopes from $2^1/_2$ units vertical in 12 units horizontal (21-percent slope), up to four units vertical in 12 units horizontal (33-percent slope), underlayment shall be a minimum of two layers applied as follows:

1. Starting at the eave, a 19-inch (483 mm) strip of underlayment shall be applied parallel with the eave and fastened sufficiently in place.
2. Starting at the eave, 36-inch-wide (914 mm) strips of underlayment felt shall be applied overlapping successive sheets 19 inches (483 mm) and fastened sufficiently in place.

1507.3.3.2 High-slope roofs. For roof slopes of four units vertical in 12 units horizontal (33-percent slope) or greater, underlayment shall be a minimum of one layer of underlayment felt applied shingle fashion, parallel to, and starting from the eaves and lapped 2 inches (51 mm), fastened only as necessary to hold in place.

1507.3.3.3 High wind attachment. Underlayment applied in areas subject to high wind [V_{asd} greater than 110 mph (49 m/s) as determined in accordance with Section 1609.3.1] shall be applied with corrosion-resistant fasteners in accordance with the manufacturer's installation instructions. Fasteners are to be applied along the overlap not more than 36 inches (914 mm) on center.

Underlayment installed where V_{asd}, in accordance with Section 1609.3.1, equals or exceeds 120 mph (54 m/s) shall be attached in a grid pattern of 12 inches (305 mm) between side laps with a 6-inch (152 mm) spacing at the side laps. Underlayment shall be applied in accordance with Sections 1507.3.3.1 and 1507.3.3.2 except all laps shall be a minimum of 4 inches (102 mm). Underlayment shall be attached using metal or plastic cap nails with a head diameter of not less than 1 inch (25 mm) with a thickness of at least 32-gage [0.0134 inch (0.34 mm)] sheet metal. The cap nail shank shall be a minimum of 12 gage [0.105 inch (2.67 mm)] with a length to penetrate through the roof sheathing or a minimum of $^3/_4$ inch (19.1 mm) into the roof sheathing.

Exception: As an alternative, adhered underlayment complying with ASTM D 1970 shall be permitted.

1507.3.4 Clay tile. Clay roof tile shall comply with ASTM C 1167.

1507.3.5 Concrete tile. Concrete roof tile shall comply with ASTM C 1492.

1507.3.6 Fasteners. Tile fasteners shall be corrosion resistant and not less than 11-gage, $^5/_{16}$-inch (8.0 mm) head, and of sufficient length to penetrate the deck a minimum of $^3/_4$ inch (19.1 mm) or through the thickness of the deck, whichever is less. Attaching wire for clay or concrete tile shall not be smaller than 0.083 inch (2.1 mm). Perimeter fastening areas include three tile courses but not less than 36 inches (914 mm) from either side of hips or ridges and edges of eaves and gable rakes.

1507.3.7 Attachment. Clay and concrete roof tiles shall be fastened in accordance with Table 1507.3.7.

TABLE 1507.3.7
CLAY AND CONCRETE TILE ATTACHMENT[a, b, c]

GENERAL - CLAY OR CONCRETE ROOF TILE			
Maximum Nominal Design Wind Speed, V_{asd}[f] (mph)	**Mean roof height (feet)**	**Roof slope < 3:12**	**Roof slope 3:12 and over**
85	0-60	One fastener per tile. Flat tile without vertical laps, two fasteners per tile.	Two fasteners per tile. Only one fastener on slopes of 7:12 and less for tiles with installed weight exceeding 7.5 lbs./sq. ft. having a width not more than 16 inches.
100	0-40		
100	>40-60	The head of all tiles shall be nailed. The nose of all eave tiles shall be fastened with approved clips. All rake tiles shall be nailed with two nails. The nose of all ridge, hip and rake tiles shall be set in a bead of roofer's mastic.	
110	0-60	The fastening system shall resist the wind forces in Section 1609.5.3.	
120	0-60	The fastening system shall resist the wind forces in Section 1609.5.3.	
130	0-60	The fastening system shall resist the wind forces in Section 1609.5.3.	
All	>60	The fastening system shall resist the wind forces in Section 1609.5.3.	

INTERLOCKING CLAY OR CONCRETE ROOF TILE WITH PROJECTING ANCHOR LUGS[d, e] (Installations on spaced/solid sheathing with battens or spaced sheathing)				
Maximum Nominal Design Wind Speed, V_{asd}[f] (mph)	**Mean roof height (feet)**	**Roof slope < 5:12**	**Roof slope 5:12 < 12:12**	**Roof slope 12:12 and over**
85	0-60	Fasteners are not required. Tiles with installed weight less than 9 lbs./sq. ft. require a minimum of one fastener per tile.	One fastener per tile every other row. All perimeter tiles require one fastener. Tiles with installed weight less than 9 lbs./sq. ft. require a minimum of one fastener per tile.	One fastener required for every tile. Tiles with installed weight less than 9 lbs./sq. ft. require a minimum of one fastener per tile.
100	0-40			
100	>40-60	The head of all tiles shall be nailed. The nose of all eave tiles shall be fastened with approved clips. All rake tiles shall be nailed with two nails. The nose of all ridge, hip and rake tiles shall be set in a bead of roofer's mastic.		
110	0-60	The fastening system shall resist the wind forces in Section 1609.5.3.		
120	0-60	The fastening system shall resist the wind forces in Section 1609.5.3.		
130	0-60	The fastening system shall resist the wind forces in Section 1609.5.3.		
All	>60	The fastening system shall resist the wind forces in Section 1609.5.3.		

INTERLOCKING CLAY OR CONCRETE ROOF TILE WITH PROJECTING ANCHOR LUGS (Installations on solid sheathing without battens)		
Maximum Nominal Design Wind Speed, V_{asd}[f] (mph)	**Mean roof height (feet)**	**All roof slopes**
85	0-60	One fastener per tile.
100	0-40	One fastener per tile.
100	> 40-60	The head of all tiles shall be nailed. The nose of all eave tiles shall be fastened with approved clips. All rake tiles shall be nailed with two nails. The nose of all ridge, hip and rake tiles shall be set in a bead of roofer's mastic.
110	0-60	The fastening system shall resist the wind forces in Section 1609.5.3.
120	0-60	The fastening system shall resist the wind forces in Section 1609.5.3.
130	0-60	The fastening system shall resist the wind forces in Section 1609.5.3.
All	> 60	The fastening system shall resist the wind forces in Section 1609.5.3.

For SI: 1 inch = 25.4 mm, 1 foot = 304.8 mm, 1 mile per hour = 0.447 m/s, 1 pound per square foot = 4.882 kg/m^2.

a. Minimum fastener size. Corrosion-resistant nails not less than No. 11 gage with $^5/_{16}$-inch head. Fasteners shall be long enough to penetrate into the sheathing $^3/_4$ inch or through the thickness of the sheathing, whichever is less. Attaching wire for clay and concrete tile shall not be smaller than 0.083 inch.

b. Snow areas. A minimum of two fasteners per tile are required or battens and one fastener.

c. Roof slopes greater than 24:12. The nose of all tiles shall be securely fastened.

d. Horizontal battens. Battens shall be not less than 1 inch by 2 inch nominal. Provisions shall be made for drainage by a minimum of $^1/_8$-inch riser at each nail or by 4-foot-long battens with at least a $^1/_2$-inch separation between battens. Horizontal battens are required for slopes over 7:12.

e. Perimeter fastening areas include three tile courses but not less than 36 inches from either side of hips or ridges and edges of eaves and gable rakes.

f. V_{asd} shall be determined in accordance with Section 1609.3.1.

1507.3.8 Application. Tile shall be applied according to the manufacturer's installation instructions, based on the following:

1. Climatic conditions.
2. Roof slope.
3. Underlayment system.
4. Type of tile being installed.

1507.3.9 Flashing. At the juncture of the roof vertical surfaces, flashing and counterflashing shall be provided in accordance with the manufacturer's installation instructions, and where of metal, shall not be less than 0.019-inch (0.48 mm) (No. 26 galvanized sheet gage) corrosion-resistant metal. The valley flashing shall extend at least 11 inches (279 mm) from the centerline each way and have a splash diverter rib not less than 1 inch (25 mm) high at the flow line formed as part of the flashing. Sections of flashing shall have an end lap of not less than 4 inches (102 mm). For roof slopes of three units vertical in 12 units horizontal (25-percent slope) and over, the valley flashing shall have a 36-inch-wide (914 mm) underlayment of either one layer of Type I underlayment running the full length of the valley, or a self-adhering polymer-modified bitumen sheet complying with ASTM D 1970, in addition to other required underlayment. In areas where the average daily temperature in January is 25°F (-4°C) or less or where there is a possibility of ice forming along the eaves causing a backup of water, the metal valley flashing underlayment shall be solid cemented to the roofing underlayment for slopes under seven units vertical in 12 units horizontal (58-percent slope) or self-adhering polymer-modified bitumen sheet shall be installed.

1507.4 Metal roof panels. The installation of metal roof panels shall comply with the provisions of this section.

1507.4.1 Deck requirements. Metal roof panel roof coverings shall be applied to a solid or closely fitted deck, except where the roof covering is specifically designed to be applied to spaced supports.

1507.4.2 Deck slope. Minimum slopes for metal roof panels shall comply with the following:

1. The minimum slope for lapped, nonsoldered seam metal roof panels without applied lap sealant shall be three units vertical in 12 units horizontal (25-percent slope).
2. The minimum slope for lapped, nonsoldered seam metal roof panels with applied lap sealant shall be one-half unit vertical in 12 units horizontal (4-percent slope). Lap sealants shall be applied in accordance with the approved manufacturer's installation instructions.
3. The minimum slope for standing-seam metal roof panel systems shall be one-quarter unit vertical in 12 units horizontal (2-percent slope).

1507.4.3 Material standards. Metal-sheet roof covering systems that incorporate supporting structural members shall be designed in accordance with Chapter 22. Metal-sheet roof coverings installed over structural decking shall comply with Table 1507.4.3(1). The materials used for metal-sheet roof coverings shall be naturally corrosion resistant or provided with corrosion resistance in accordance with the standards and minimum thicknesses shown in Table 1507.4.3(2).

TABLE 1507.4.3(1)
METAL ROOF COVERINGS

ROOF COVERING TYPE	STANDARD APPLICATION RATE/THICKNESS
Aluminum	ASTM B 209, 0.024 inch minimum thickness for roll-formed panels and 0.019 inch minimum thickness for press-formed shingles.
Aluminum-zinc alloy coated steel	ASTM A 792 AZ 50
Cold-rolled copper	ASTM B 370 minimum 16 oz./sq. ft. and 12 oz./sq. ft. high yield copper for metal-sheet roof covering systems: 12 oz./sq. ft. for preformed metal shingle systems.
Copper	16 oz./sq. ft. for metal-sheet roof-covering systems; 12 oz./sq. ft. for preformed metal shingle systems.
Galvanized steel	ASTM A 653 G-90 zinc-coated[a].
Hard lead	2 lbs./sq. ft.
Lead-coated copper	ASTM B 101
Prepainted steel	ASTM A 755
Soft lead	3 lbs./sq. ft.
Stainless steel	ASTM A 240, 300 Series Alloys
Steel	ASTM A 924
Terne and terne-coated stainless	Terne coating of 40 lbs. per double base box, field painted where applicable in accordance with manufacturer's installation instructions.
Zinc	0.027 inch minimum thickness; 99.995% electrolytic high grade zinc with alloy additives of copper (0.08% - 0.20%), titanium (0.07% - 0.12%) and aluminum (0.015%).

For SI: 1 ounce per square foot = 0.305 kg/m^2,
1 pound per square foot = 4.882 kg/m^2,
1 inch = 25.4 mm, 1 pound = 0.454 kg.

a. For Group U buildings, the minimum coating thickness for ASTM A 653 galvanized steel roofing shall be G-60.

TABLE 1507.4.3(2)
MINIMUM CORROSION RESISTANCE

55% Aluminum-zinc alloy coated steel	ASTM A 792 AZ 50
5% Aluminum alloy-coated steel	ASTM A 875 GF60
Aluminum-coated steel	ASTM A 463 T2 65
Galvanized steel	ASTM A 653 G-90
Prepainted steel	ASTM A 755[a]

a. Paint systems in accordance with ASTM A 755 shall be applied over steel products with corrosion-resistant coatings complying with ASTM A 792, ASTM A 875, ASTM A 463 or ASTM A 653.

1507.4.4 Attachment. Metal roof panels shall be secured to the supports in accordance with the approved manufacturer's fasteners. In the absence of manufacturer recommendations, the following fasteners shall be used:

1. Galvanized fasteners shall be used for steel roofs.
2. Copper, brass, bronze, copper alloy or 300 series stainless-steel fasteners shall be used for copper roofs.
3. Stainless-steel fasteners are acceptable for all types of metal roofs.
4. Aluminum fasteners are acceptable for aluminum roofs attached to aluminum supports.

1507.4.5 Underlayment and high wind. Underlayment applied in areas subject to high winds [V_{asd} greater than 110 mph (49 m/s) as determined in accordance with Section 1609.3.1] shall be applied with corrosion-resistant fasteners in accordance with the manufacturer's installation instructions. Fasteners are to be applied along the overlap not more than 36 inches (914 mm) on center.

Underlayment installed where V_{asd}, in accordance with Section 1609.3.1, equals or exceeds 120 mph (54 m/s) shall comply with ASTM D 226 Type II, ASTM D 4869 Type IV, or ASTM D 1970. The underlayment shall be attached in a grid pattern of 12 inches (305 mm) between side laps with a 6-inch (152 mm) spacing at the side laps. Underlayment shall be applied in accordance with the manufacturer's installation instructions except all laps shall be a minimum of 4 inches (102 mm). Underlayment shall be attached using metal or plastic cap nails with a head diameter of not less than 1 inch (25 mm) with a thickness of at least 32-gage [0.0134 inch (0.34 mm)] sheet metal. The cap nail shank shall be a minimum of 12 gage [0.105 inch (2.67 mm)] with a length to penetrate through the roof sheathing or a minimum of $^3/_4$ inch (19.1 mm) into the roof sheathing.

Exception: As an alternative, adhered underlayment complying with ASTM D 1970 shall be permitted.

1507.5 Metal roof shingles. The installation of metal roof shingles shall comply with the provisions of this section.

1507.5.1 Deck requirements. Metal roof shingles shall be applied to a solid or closely fitted deck, except where the roof covering is specifically designed to be applied to spaced sheathing.

1507.5.2 Deck slope. Metal roof shingles shall not be installed on roof slopes below three units vertical in 12 units horizontal (25-percent slope).

1507.5.3 Underlayment. Underlayment shall comply with ASTM D 226, Type I or ASTM D 4869.

1507.5.3.1 Underlayment and high wind. Underlayment applied in areas subject to high winds [V_{asd} greater than 110 mph (49 m/s) as determined in accordance with Section 1609.3.1] shall be applied with corrosion-resistant fasteners in accordance with the manufacturer's installation instructions. Fasteners are to be applied along the overlap not farther apart than 36 inches (914 mm) on center.

Underlayment installed where V_{asd}, in accordance with Section 1609.3.1, equals or exceeds 120 mph (54 m/s) shall comply with ASTM D 226 Type II or ASTM D 4869 Type IV. The underlayment shall be attached in a grid pattern of 12 inches (305 mm) between side laps with a 6-inch spacing (152 mm) at the side laps. Underlayment shall be applied in accordance with the manufacturer's installation instructions except all laps shall be a minimum of 4 inches (102 mm). Underlayment shall be attached using metal or plastic cap nails with a head diameter of not less than 1 inch (25 mm) with a thickness of at least 32-gage [0.0134 inch (0.34 mm)] sheet metal. The cap nail shank shall be a minimum of 12 gage [0.105 inch (2.67 mm)] with a length to penetrate through the roof sheathing or a minimum of $^3/_4$ inch (19.1 mm) into the roof sheathing.

Exception: As an alternative, adhered underlayment complying with ASTM D 1970 shall be permitted.

1507.5.4 Ice barrier. In areas where there has been a history of ice forming along the eaves causing a backup of water, an ice barrier that consists of at least two layers of underlayment cemented together or of a self-adhering polymer-modified bitumen sheet shall be used in lieu of normal underlayment and extend from the lowest edges of all roof surfaces to a point at least 24 inches (610 mm) inside the exterior wall line of the building.

Exception: Detached accessory structures that contain no conditioned floor area.

1507.5.5 Material standards. Metal roof shingle roof coverings shall comply with Table 1507.4.3(1). The materials used for metal-roof shingle roof coverings shall be naturally corrosion resistant or provided with corrosion resistance in accordance with the standards and minimum thicknesses specified in the standards listed in Table 1507.4.3(2).

1507.5.6 Attachment. Metal roof shingles shall be secured to the roof in accordance with the *approved* manufacturer's installation instructions.

1507.5.7 Flashing. Roof valley flashing shall be of corrosion-resistant metal of the same material as the roof covering or shall comply with the standards in Table 1507.4.3(1). The valley flashing shall extend at least 8 inches (203 mm) from the centerline each way and shall have a splash diverter rib not less than $^3/_4$ inch (19.1 mm) high at the flow line formed as part of the flashing. Sections of flashing shall have an end lap of not less than 4 inches (102 mm). In areas where the average daily temperature in January is 25°F (-4°C) or less or where there is a possibility of ice forming along the eaves causing a backup of water, the metal valley flashing shall have a 36-inch-wide (914 mm) underlayment directly under it consisting of either one layer of underlayment running the full length of the valley or a self-adhering polymer-modified bitumen sheet complying with ASTM D 1970, in addition to underlayment required for metal roof shingles. The metal valley flashing underlayment shall be solidly cemented to the roofing underlayment for roof slopes under seven units vertical in 12 units horizontal (58-per-

cent slope) or self-adhering polymer-modified bitumen sheet shall be installed.

1507.6 Mineral-surfaced roll roofing. The installation of mineral-surfaced roll roofing shall comply with this section.

1507.6.1 Deck requirements. Mineral-surfaced roll roofing shall be fastened to solidly sheathed roofs.

1507.6.2 Deck slope. Mineral-surfaced roll roofing shall not be applied on roof slopes below one unit vertical in 12 units horizontal (8-percent slope).

1507.6.3 Underlayment. Underlayment shall comply with ASTM D 226, Type I or ASTM D 4869.

1507.6.3.1 Underlayment and high wind. Underlayment applied in areas subject to high winds [V_{asd} greater than 110 mph (49 m/s) as determined in accordance with Section 1609.3.1] shall be applied with corrosion-resistant fasteners in accordance with the manufacturer's installation instructions. Fasteners are to be applied along the overlap not more than 36 inches (914 mm) on center.

Underlayment installed where V_{asd}, in accordance with Section 1609.3.1, equals or exceeds 120 mph (54 m/s) shall comply with ASTM D 226 Type II. The underlayment shall be attached in a grid pattern of 12 inches (305 mm) between side laps with a 6-inch (152 mm) spacing at the side laps. Underlayment shall be applied in accordance with the manufacturer's installation instructions except all laps shall be a minimum of 4 inches (102 mm). Underlayment shall be attached using metal or plastic cap nails with a head diameter of not less than 1 inch (25 mm) with a thickness of at least 32-gage [0.0134 inch (0.34 mm)] sheet metal. The cap nail shank shall be a minimum of 12 gage [0.105 inch (2.67 mm)] with a length to penetrate through the roof sheathing or a minimum of $^3/_4$ inch (19.1 mm) into the roof sheathing.

Exception: As an alternative, adhered underlayment complying with ASTM D 1970 shall be permitted.

1507.6.4 Ice barrier. In areas where there has been a history of ice forming along the eaves causing a backup of water, an ice barrier that consists of at least two layers of underlayment cemented together or of a self-adhering polymer-modified bitumen sheet shall be used in lieu of normal underlayment and extend from the lowest edges of all roof surfaces to a point at least 24 inches (610 mm) inside the exterior wall line of the building.

Exception: Detached accessory structures that contain no conditioned floor area.

1507.6.5 Material standards. Mineral-surfaced roll roofing shall conform to ASTM D 3909 or ASTM D 6380.

1507.7 Slate shingles. The installation of slate shingles shall comply with the provisions of this section.

1507.7.1 Deck requirements. Slate shingles shall be fastened to solidly sheathed roofs.

1507.7.2 Deck slope. Slate shingles shall only be used on slopes of four units vertical in 12 units horizontal (4:12) or greater.

1507.7.3 Underlayment. Underlayment shall comply with ASTM D 226, Type II or ASTM D 4869, Type III or IV.

1507.7.3.1 Underlayment and high wind. Underlayment applied in areas subject to high winds [V_{asd} greater than 110 mph (49 m/s) as determined in accordance with Section 1609.3.1] shall be applied with corrosion-resistant fasteners in accordance with the manufacturer's installation instructions. Fasteners are to be applied along the overlap not more than 36 inches (914 mm) on center.

Underlayment installed where V_{asd}, in accordance with Section 1609.3.1, equals or exceeds 120 mph (54 m/s) shall comply with ASTM D 226, Type II or ASTM D 4869, Type IV. The underlayment shall be attached in a grid pattern of 12 inches (305 mm) between side laps with a 6-inch (152 mm) spacing at the side laps. Underlayment shall be applied in accordance with the manufacturer's installation instructions except all laps shall be a minimum of 4 inches (102 mm). Underlayment shall be attached using metal or plastic cap nails with a head diameter of not less than 1 inch (25 mm) with a thickness of at least 32-gage [0.0134 inch (0.34 mm)] sheet metal. The cap nail shank shall be a minimum of 12 gage [0.105 inch (2.67 mm)] with a length to penetrate through the roof sheathing or a minimum of $^3/_4$ inch (19.1 mm) into the roof sheathing.

Exception: As an alternative, adhered underlayment complying with ASTM D 1970 shall be permitted.

1507.7.4 Ice barrier. In areas where the average daily temperature in January is 25°F (-4°C) or less or where there is a possibility of ice forming along the eaves causing a backup of water, an ice barrier that consists of at least two layers of underlayment cemented together or of a self-adhering polymer-modified bitumen sheet shall extend from the lowest edges of all roof surfaces to a point at least 24 inches (610 mm) inside the exterior wall line of the building.

Exception: Detached accessory structures that contain no conditioned floor area.

1507.7.5 Material standards. Slate shingles shall comply with ASTM C 406.

1507.7.6 Application. Minimum headlap for slate shingles shall be in accordance with Table 1507.7.6. Slate shingles shall be secured to the roof with two fasteners per slate.

TABLE 1507.7.6
SLATE SHINGLE HEADLAP

SLOPE	HEADLAP (inches)
4:12 < slope < 8:12	4
8:12 < slope < 20:12	3
slope ≥ 20:12	2

For SI: 1 inch = 25.4 mm.

1507.7.7 Flashing. Flashing and counterflashing shall be made with sheet metal. Valley flashing shall be a minimum of 15 inches (381 mm) wide. Valley and flashing metal shall be a minimum uncoated thickness of 0.0179-inch (0.455 mm) zinc-coated G90. Chimneys, stucco or brick walls shall have a minimum of two plies of felt for a cap flashing consisting of a 4-inch-wide (102 mm) strip of felt set in plastic cement and extending 1 inch (25 mm) above the first felt and a top coating of plastic cement. The felt shall extend over the base flashing 2 inches (51 mm).

1507.8 Wood shingles. The installation of wood shingles shall comply with the provisions of this section and Table 1507.8.

1507.8.1 Deck requirements. Wood shingles shall be installed on solid or spaced sheathing. Where spaced sheathing is used, sheathing boards shall be not less than 1-inch by 4-inch (25 mm by 102 mm) nominal dimensions and shall be spaced on centers equal to the weather exposure to coincide with the placement of fasteners.

1507.8.1.1 Solid sheathing required. Solid sheathing is required in areas where the average daily temperature in January is 25°F (-4°C) or less or where there is a possibility of ice forming along the eaves causing a backup of water.

1507.8.2 Deck slope. Wood shingles shall be installed on slopes of not less than three units vertical in 12 units horizontal (25-percent slope).

1507.8.3 Underlayment. Underlayment shall comply with ASTM D 226, Type I or ASTM D 4869.

1507.8.3.1 Underlayment and high wind. Underlayment applied in areas subject to high winds [V_{asd} greater than 110 mph (49 m/s) as determined in accordance with Section 1609.3.1] shall be applied with corrosion-resistant fasteners in accordance with the manufacturer's installation instructions. Fasteners are to be applied along the overlap not more than 36 inches (914 mm) on center.

Underlayment installed where V_{asd}, in accordance with Section 1609.3.1, equals or exceeds 120 mph (54 m/s) shall comply with ASTM D 226, Type II or ASTM D 4869, Type IV. The underlayment shall be attached in a grid pattern of 12 inches (305 mm) between side laps with a 6-inch (152 mm) spacing at the side laps. Underlayment shall be applied in accordance with the manufacturer's installation instructions except all laps shall be a minimum of 4 inches (102 mm). Underlayment shall be attached using metal or plastic cap nails with a head diameter of not less than 1 inch (25 mm) with a thickness of at least 32-gage [0.0134 inch (0.34 mm)] sheet metal. The cap nail shank shall be a minimum of 12 gage [0.105 inch (2.67 mm)] with a length to penetrate through the roof sheathing or a minimum of $^3/_4$ inch (19.1 mm) into the roof sheathing.

Exception: As an alternative, adhered underlayment complying with ASTM D 1970 shall be permitted.

1507.8.4 Ice barrier. In areas where there has been a history of ice forming along the eaves causing a backup of water, an ice barrier that consists of at least two layers of underlayment cemented together or of a self-adhering polymer-modified bitumen sheet shall be used in lieu of normal underlayment and extend from the lowest edges of all roof surfaces to a point at least 24 inches (610 mm) inside the exterior wall line of the building.

Exception: Detached accessory structures that contain no conditioned floor area.

1507.8.5 Material standards. Wood shingles shall be of naturally durable wood and comply with the requirements of Table 1507.8.5.

TABLE 1507.8.5
WOOD SHINGLE MATERIAL REQUIREMENTS

MATERIAL	APPLICABLE MINIMUM GRADES	GRADING RULES
Wood shingles of naturally durable wood	1, 2 or 3	CSSB

CSSB = Cedar Shake and Shingle Bureau

1507.8.6 Attachment. Fasteners for wood shingles shall be corrosion resistant with a minimum penetration of $^3/_4$ inch (19.1 mm) into the sheathing. For sheathing less than $^1/_2$ inch (12.7 mm) in thickness, the fasteners shall extend through the sheathing. Each shingle shall be attached with a minimum of two fasteners.

1507.8.7 Application. Wood shingles shall be laid with a side lap not less than $1^1/_2$ inches (38 mm) between joints in adjacent courses, and not be in direct alignment in alternate courses. Spacing between shingles shall be $^1/_4$ to $^3/_8$ inch (6.4 to 9.5 mm). Weather exposure for wood shingles shall not exceed that set in Table 1507.8.7.

TABLE 1507.8.7
WOOD SHINGLE WEATHER EXPOSURE AND ROOF SLOPE

ROOFING MATERIAL	LENGTH (inches)	GRADE	EXPOSURE (inches)	
			3:12 pitch to < 4:12	4:12 pitch or steeper
Shingles of naturally durable wood	16	No. 1	3.75	5
		No. 2	3.5	4
		No. 3	3	3.5
	18	No. 1	4.25	5.5
		No. 2	4	4.5
		No. 3	3.5	4
	24	No. 1	5.75	7.5
		No. 2	5.5	6.5
		No. 3	5	5.5

For SI: 1 inch = 25.4 mm.

1507.8.8 Flashing. At the juncture of the roof and vertical surfaces, flashing and counterflashing shall be provided in accordance with the manufacturer's installation instructions, and where of metal, shall be not less than 0.019-inch (0.48 mm) (No. 26 galvanized sheet gage) corrosion-resistant metal. The valley flashing shall extend at least 11 inches (279 mm) from the centerline each way and have a splash diverter rib not less than 1 inch (25 mm) high at the flow line formed as part of the flashing. Sections of flash-

ing shall have an end lap of not less than 4 inches (102 mm). For roof slopes of three units vertical in 12 units horizontal (25-percent slope) and over, the valley flashing shall have a 36-inch-wide (914 mm) underlayment of either one layer of Type I underlayment running the full length of the valley or a self-adhering polymer-modified bitumen sheet complying with ASTM D 1970, in addition to other required underlayment. In areas where the average daily temperature in January is 25°F (-4°C) or less or where there is a possibility of ice forming along the eaves causing a backup of water, the metal valley flashing underlayment shall be solidly cemented to the roofing

TABLE 1507.8
WOOD SHINGLE AND SHAKE INSTALLATION

ROOF ITEM	WOOD SHINGLES	WOOD SHAKES
1. Roof slope	Wood shingles shall be installed on slopes of not less than three units vertical in 12 units horizontal (3:12).	Wood shakes shall be installed on slopes of not less than four units vertical in 12 units horizontal (4:12).
2. Deck requirement		
Temperate climate	Shingles shall be applied to roofs with solid or spaced sheathing. Where spaced sheathing is used, sheathing boards shall be not less than 1″ × 4″ nominal dimensions and shall be spaced on centers equal to the weather exposure to coincide with the placement of fasteners.	Shakes shall be applied to roofs with solid or spaced sheathing. Where spaced sheathing is used, sheathing boards shall be not less than 1″ × 4″ nominal dimensions and shall be spaced on centers equal to the weather exposure to coincide with the placement of fasteners. When 1″ × 4″ spaced sheathing is installed at 10 inches, boards must be installed between the sheathing boards.
In areas where the average daily temperature in January is 25°F or less or where there is a possibility of ice forming along the eaves causing a backup of water.	Solid sheathing is required.	Solid sheathing is required.
3. Interlayment	No requirements.	Interlayment shall comply with ASTM D 226, Type 1.
4. Underlayment		
Temperate climate	Underlayment shall comply with ASTM D 226, Type 1.	Underlayment shall comply with ASTM D 226, Type 1.
In areas where there is a possibility of ice forming along the eaves causing a backup of water.	An ice barrier that consists of at least two layers of underlayment cemented together or of a self-adhering polymer-modified bitumen sheet shall extend from the eave's edge to a point at least 24 inches inside the exterior wall line of the building.	An ice barrier that consists of at least two layers of underlayment cemented together or of a self-adhering polymer-modified bitumen sheet shall extend from the lowest edges of all roof surfaces to a point at least 24 inches inside the exterior wall line of the building.
5. Application		
Attachment	Fasteners for wood shingles shall be hot-dipped galvanized or Type 304 (Type 316 for coastal areas) stainless steel with a minimum penetration of 0.75 inch into the sheathing. For sheathing less than 0.5 inch thick, the fasteners shall extend through the sheathing.	Fasteners for wood shakes shall be hot-dipped galvanized or Type 304 (Type 316 for coastal areas) with a minimum penetration of 0.75 inch into the sheathing. For sheathing less than 0.5 inch thick, the fasteners shall extend through the sheathing.
No. of fasteners	Two per shingle.	Two per shake.
Exposure	Weather exposures shall not exceed those set forth in Table 1507.8.7.	Weather exposures shall not exceed those set forth in Table 1507.9.8.
Method	Shingles shall be laid with a side lap of not less than 1.5 inches between joints in courses, and no two joints in any three adjacent courses shall be in direct alignment. Spacing between shingles shall be 0.25 to 0.375 inch.	Shakes shall be laid with a side lap of not less than 1.5 inches between joints in adjacent courses. Spacing between shakes shall not be less than 0.375 inch or more than 0.625 inch for shakes and taper sawn shakes of naturally durable wood and shall be 0.25 to 0.375 inch for preservative-treated taper sawn shakes.
Flashing	In accordance with Section 1507.8.8.	In accordance with Section 1507.9.9.

For SI: 1 inch = 25.4 mm, °C = [(°F) - 32]/1.8.

underlayment for slopes under seven units vertical in 12 units horizontal (58-percent slope) or self-adhering polymer-modified bitumen sheet shall be installed.

1507.9 Wood shakes. The installation of wood shakes shall comply with the provisions of this section and Table 1507.8.

1507.9.1 Deck requirements. Wood shakes shall only be used on solid or spaced sheathing. Where spaced sheathing is used, sheathing boards shall be not less than 1-inch by 4-inch (25 mm by 102 mm) nominal dimensions and shall be spaced on centers equal to the weather exposure to coincide with the placement of fasteners. Where 1-inch by 4-inch (25 mm by 102 mm) spaced sheathing is installed at 10 inches (254 mm) on center, additional 1-inch by 4-inch (25 mm by 102 mm) boards shall be installed between the sheathing boards.

1507.9.1.1 Solid sheathing required. Solid sheathing is required in areas where the average daily temperature in January is 25°F (-4°C) or less or where there is a possibility of ice forming along the eaves causing a backup of water.

1507.9.2 Deck slope. Wood shakes shall only be used on slopes of not less than four units vertical in 12 units horizontal (33-percent slope).

1507.9.3 Underlayment. Underlayment shall comply with ASTM D 226, Type I or ASTM D 4869.

1507.9.3.1 Underlayment and high wind. Underlayment applied in areas subject to high winds [V_{asd} greater than 110 mph (49 m/s) as determined in accordance with Section 1609.3.1] shall be applied with corrosion-resistant fasteners in accordance with the manufacturer's installation instructions. Fasteners are to be applied along the overlap not more than 36 inches (914 mm) on center.

Underlayment installed where V_{asd}, in accordance with Section 1609.3.1, equals or exceeds 120 mph (54 m/s) shall comply with ASTM D 226, Type II or ASTM D 4869 Type IV. The underlayment shall be attached in a grid pattern of 12 inches (305 mm) between side laps with a 6-inch (152 mm) spacing at the side laps. Underlayment shall be applied in accordance with the manufacturer's installation instructions except all laps shall be a minimum of 4 inches (102 mm). Underlayment shall be attached using metal or plastic cap nails with a head diameter of not less than 1 inch (25 mm) with a thickness of at least 32-gage [0.0134 inch (0.34 mm)] sheet metal. The cap nail shank shall be a minimum of 12 gage [0.105 inch (2.67 mm)] with a length to penetrate through the roof sheathing or a minimum of $^3/_4$ inch (19.1 mm) into the roof sheathing.

Exception: As an alternative, adhered underlayment complying with ASTM D 1970 shall be permitted.

1507.9.4 Ice barrier. In areas where there has been a history of ice forming along the eaves causing a backup of water, an ice barrier that consists of at least two layers of underlayment cemented together or of a self-adhering polymer-modified bitumen sheet shall be used in lieu of normal underlayment and extend from the lowest edges of all roof surfaces to a point at least 24 inches (610 mm) inside the exterior wall line of the building.

Exception: Detached accessory structures that contain no conditioned floor area.

1507.9.5 Interlayment. Interlayment shall comply with ASTM D 226, Type I.

1507.9.6 Material standards. Wood shakes shall comply with the requirements of Table 1507.9.6.

TABLE 1507.9.6
WOOD SHAKE MATERIAL REQUIREMENTS

MATERIAL	MINIMUM GRADES	APPLICABLE GRADING RULES
Wood shakes of naturally durable wood	1	CSSB
Taper sawn shakes of naturally durable wood	1 or 2	CSSB
Preservative-treated shakes and shingles of naturally durable wood	1	CSSB
Fire-retardant-treated shakes and shingles of naturally durable wood	1	CSSB
Preservative-treated taper sawn shakes of Southern pine treated in accordance with AWPA U1 (Commodity Specification A, Use Category 3B and Section 5.6)	1 or 2	TFS

CSSB = Cedar Shake and Shingle Bureau.
TFS = Forest Products Laboratory of the Texas Forest Services.

1507.9.7 Attachment. Fasteners for wood shakes shall be corrosion resistant with a minimum penetration of $^3/_4$ inch (19.1 mm) into the sheathing. For sheathing less than $^1/_2$ inch (12.7 mm) in thickness, the fasteners shall extend through the sheathing. Each shake shall be attached with a minimum of two fasteners.

1507.9.8 Application. Wood shakes shall be laid with a side lap not less than $1^1/_2$ inches (38 mm) between joints in adjacent courses. Spacing between shakes in the same course shall be $^3/_8$ to $^5/_8$ inch (9.5 to 15.9 mm) for shakes and taper sawn shakes of naturally durable wood and shall be $^1/_4$ to $^3/_8$ inch (6.4 to 9.5 mm) for preservative taper sawn shakes. Weather exposure for wood shakes shall not exceed those set in Table 1507.9.8.

1507.9.9 Flashing. At the juncture of the roof and vertical surfaces, flashing and counterflashing shall be provided in accordance with the manufacturer's installation instructions, and where of metal, shall be not less than 0.019-inch (0.48 mm) (No. 26 galvanized sheet gage) corrosion-resistant metal. The valley flashing shall extend at least 11 inches (279 mm) from the centerline each way and have a splash diverter rib not less than 1 inch (25 mm) high at the flow line formed as part of the flashing. Sections of flashing shall have an end lap of not less than 4 inches (102 mm). For roof slopes of three units vertical in 12 units horizontal (25-percent slope) and over, the valley flashing shall have a 36-inch-wide (914 mm) underlayment of either one layer of Type I underlayment running the full length of the valley or a self-adhering polymer-modified bitumen sheet complying with ASTM D 1970, in addition

TABLE 1507.9.8
WOOD SHAKE WEATHER EXPOSURE AND ROOF SLOPE

ROOFING MATERIAL	LENGTH (inches)	GRADE	EXPOSURE (inches) 4:12 PITCH OR STEEPER
Shakes of naturally durable wood	18 24	No. 1 No. 1	7.5 10[a]
Preservative-treated taper sawn shakes of Southern yellow pine	18 24	No. 1 No. 1	7.5 10
	18 24	No. 2 No. 2	5.5 7.5
Taper sawn shakes of naturally durable wood	18 24	No. 1 No. 1	7.5 10
	18 24	No. 2 No. 2	5.5 7.5

For SI: 1 inch = 25.4 mm.
a. For 24-inch by 0.375-inch handsplit shakes, the maximum exposure is 7.5 inches.

to other required underlayment. In areas where the average daily temperature in January is 25°F (-4°C) or less or where there is a possibility of ice forming along the eaves causing a backup of water, the metal valley flashing underlayment shall be solidly cemented to the roofing underlayment for slopes under seven units vertical in 12 units horizontal (58-percent slope) or self-adhering polymer-modified bitumen sheet shall be installed.

1507.10 Built-up roofs. The installation of built-up roofs shall comply with the provisions of this section.

1507.10.1 Slope. Built-up roofs shall have a design slope of not less than one-fourth unit vertical in 12 units horizontal (2-percent slope) for drainage, except for coal-tar built-up roofs that shall have a design slope of not less than one-eighth unit vertical in 12 units horizontal (1-percent slope).

1507.10.2 Material standards. Built-up roof covering materials shall comply with the standards in Table 1507.10.2 or UL 55A.

1507.11 Modified bitumen roofing. The installation of modified bitumen roofing shall comply with the provisions of this section.

1507.11.1 Slope. Modified bitumen membrane roofs shall have a design slope of not less than one-fourth unit vertical in 12 units horizontal (2-percent slope) for drainage.

1507.11.2 Material standards. Modified bitumen roof coverings shall comply with CGSB 37-GP-56M, ASTM D 6162, ASTM D 6163, ASTM D 6164, ASTM D 6222, ASTM D 6223, ASTM D 6298 or ASTM D 6509.

1507.12 Thermoset single-ply roofing. The installation of thermoset single-ply roofing shall comply with the provisions of this section.

1507.12.1 Slope. Thermoset single-ply membrane roofs shall have a design slope of not less than one-fourth unit vertical in 12 units horizontal (2-percent slope) for drainage.

1507.12.2 Material standards. Thermoset single-ply roof coverings shall comply with ASTM D 4637, ASTM D 5019 or CGSB 37-GP-52M.

1507.12.3 Ballasted thermoset low-slope roofs. Ballasted thermoset low-slope roofs (roof slope < 2:12) shall be installed in accordance with this section and Section 1504.4. Stone used as ballast shall comply with ASTM D 448 or ASTM D 7655.

1507.13 Thermoplastic single-ply roofing. The installation of thermoplastic single-ply roofing shall comply with the provisions of this section.

TABLE 1507.10.2
BUILT-UP ROOFING MATERIAL STANDARDS

MATERIAL STANDARD	STANDARD
Acrylic coatings used in roofing	ASTM D 6083
Aggregate surfacing	ASTM D 1863
Asphalt adhesive used in roofing	ASTM D 3747
Asphalt cements used in roofing	ASTM D 3019; D 2822; D 4586
Asphalt-coated glass fiber base sheet	ASTM D 4601
Asphalt coatings used in roofing	ASTM D 1227; D 2823; D 2824; D 4479
Asphalt glass felt	ASTM D 2178
Asphalt primer used in roofing	ASTM D 41
Asphalt-saturated and asphalt-coated organic felt base sheet	ASTM D 2626
Asphalt-saturated organic felt (perforated)	ASTM D 226
Asphalt used in roofing	ASTM D 312
Coal-tar cements used in roofing	ASTM D 4022; D 5643
Coal-tar saturated organic felt	ASTM D 227
Coal-tar pitch used in roofing	ASTM D 450; Type I or II
Coal-tar primer used in roofing, dampproofing and waterproofing	ASTM D 43
Glass mat, coal tar	ASTM D 4990
Glass mat, venting type	ASTM D 4897
Mineral-surfaced inorganic cap sheet	ASTM D 3909
Thermoplastic fabrics used in roofing	ASTM D 5665, D 5726

1507.13.1 Slope. Thermoplastic single-ply membrane roofs shall have a design slope of not less than one-fourth unit vertical in 12 units horizontal (2-percent slope).

1507.13.2 Material standards. Thermoplastic single-ply roof coverings shall comply with ASTM D 4434, ASTM D 6754, ASTM D 6878 or CGSB CAN/CGSB 37-54.

1507.13.3 Ballasted thermoplastic low-slope roofs. Ballasted thermoplastic low-slope roofs (roof slope < 2:12) shall be installed in accordance with this section and Section 1504.4. Stone used as ballast shall comply with ASTM D 448 or ASTM D 7655.

1507.14 Sprayed polyurethane foam roofing. The installation of sprayed polyurethane foam roofing shall comply with the provisions of this section.

1507.14.1 Slope. Sprayed polyurethane foam roofs shall have a design slope of not less than one-fourth unit vertical in 12 units horizontal (2-percent slope) for drainage.

1507.14.2 Material standards. Spray-applied polyurethane foam insulation shall comply with Type III or IV as defined in ASTM C 1029.

1507.14.3 Application. Foamed-in-place roof insulation shall be installed in accordance with the manufacturer's instructions. A liquid-applied protective coating that complies with Table 1507.14.3 shall be applied no less than 2 hours nor more than 72 hours following the application of the foam.

TABLE 1507.14.3
PROTECTIVE COATING MATERIAL STANDARDS

MATERIAL	STANDARD
Acrylic coating	ASTM D 6083
Silicone coating	ASTM D 6694
Moisture-cured polyurethane coating	ASTM D 6947

1507.14.4 Foam plastics. Foam plastic materials and installation shall comply with Chapter 26.

1507.15 Liquid-applied roofing. The installation of liquid-applied roofing shall comply with the provisions of this section.

1507.15.1 Slope. Liquid-applied roofing shall have a design slope of not less than one-fourth unit vertical in 12 units horizontal (2-percent slope).

1507.15.2 Material standards. Liquid-applied roofing shall comply with ASTM C 836, ASTM C 957, ASTM D 1227 or ASTM D 3468, ASTM D 6083, ASTM D 6694 or ASTM D 6947.

1507.16 Vegetative roofs, roof gardens and landscaped roofs. *Vegetative roofs*, roof gardens and landscaped roofs shall comply with the requirements of this chapter, Sections 1607.12.3 and 1607.12.3.1 and the *International Fire Code*.

[BF] 1507.16.1 Structural fire resistance. The structural frame and roof construction supporting the load imposed upon the roof by the *vegetative roof*, roof gardens or landscaped roofs shall comply with the requirements of Table 601.

1507.17 Photovoltaic shingles. The installation of *photovoltaic shingles* shall comply with the provisions of this section.

1507.17.1 Deck requirements. *Photovoltaic shingles* shall be applied to a solid or closely fitted deck, except where the shingles are specifically designed to be applied over spaced sheathing.

1507.17.2 Deck slope. *Photovoltaic shingles* shall not be installed on roof slopes less than three units vertical in 12 units horizontal (25-percent slope).

1507.17.3 Underlayment. Unless otherwise noted, required underlayment shall conform to ASTM D 226, ASTM D 4869 or ASTM D 6757.

1507.17.4 Underlayment application. Underlayment shall be applied shingle fashion, parallel to and starting from the eave, lapped 2 inches (51 mm) and fastened sufficiently to hold in place.

1507.17.4.1 High wind attachment. Underlayment applied in areas subject to high winds [V_{asd} greater than 110 mph (49 m/s) as determined in accordance with Section 1609.3.1] shall be applied with corrosion-resistant fasteners in accordance with the manufacturer's instructions. Fasteners shall be applied along the overlap at not more than 36 inches (914 mm) on center. Underlayment installed where V_{asd} is not less than 120 mph (54 m/s) shall comply with ASTM D 226, Type II, ASTM D 4869, Type IV or ASTM D 6757. The underlayment shall be attached in a grid pattern of 12 inches (305 mm) between side laps with a 6-inch (152 mm) spacing at the side laps. Underlayment shall be applied in accordance with Section 1507.2.8 except all laps shall be a minimum of 4 inches (102 mm). Underlayment shall be attached using metal or plastic cap nails with a head diameter of not less than 1 inch (25 mm) with a thickness of not less than 32-gage [0.0134 inch (0.34 mm)] sheet metal. The cap nail shank shall be a minimum of 12 gage [0.105 inch (2.67 mm)] with a length to penetrate through the roof sheathing or a minimum of $^3/_4$ inch (19.1 mm) into the roof sheathing.

Exception: As an alternative, adhered underlayment complying with ASTM D 1970 shall be permitted.

1507.17.4.2 Ice barrier. In areas where there has been a history of ice forming along the eaves causing a backup of water, an ice barrier that consists of at least two layers of underlayment cemented together or of a self-adhering polymer modified bitumen sheet shall be used instead of normal underlayment and extend from the lowest edges of all roof surfaces to a point not less than 24 inches (610 mm) inside the *exterior wall* line of the building.

Exception: Detached accessory structures that contain no conditioned floor area.

1507.17.5 Fasteners. Fasteners for *photovoltaic shingles* shall be galvanized, stainless steel, aluminum or copper roofing nails, minimum 12-gage [0.105 inch (2.67 mm)] shank with a minimum $^3/_8$-inch-diameter (9.5 mm) head,

of a length to penetrate through the roofing materials and a minimum of $^3/_4$ inch (19.1 mm) into the roof sheathing. Where the roof sheathing is less than $^3/_4$ inch (19.1 mm) thick, the nails shall penetrate through the sheathing. Fasteners shall comply with ASTM F 1667.

1507.17.6 Material standards. *Photovoltaic shingles* shall be *listed* and labeled in accordance with UL 1703.

1507.17.7 Attachment. *Photovoltaic shingles* shall be attached in accordance with the manufacturer's installation instructions.

1507.17.8 Wind resistance. *Photovoltaic shingles* shall be tested in accordance with procedures and acceptance criteria in ASTM D 3161. *Photovoltaic shingles* shall comply with the classification requirements of Table 1504.1.1 for the appropriate maximum nominal design wind speed. *Photovoltaic shingle* packaging shall bear a *label* to indicate compliance with the procedures in ASTM D 3161 and the required classification from Table 1504.1.1.

SECTION 1508
ROOF INSULATION

[BF] 1508.1 General. The use of above-deck thermal insulation shall be permitted provided such insulation is covered with an approved roof covering and passes the tests of NFPA 276 or UL 1256 when tested as an assembly.

Exceptions:

1. Foam plastic roof insulation shall conform to the material and installation requirements of Chapter 26.
2. Where a concrete roof deck is used and the above-deck thermal insulation is covered with an approved roof covering.

[BF] 1508.1.1 Cellulosic fiberboard. Cellulosic fiberboard roof insulation shall conform to the material and installation requirements of Chapter 23.

[BF] 1508.2 Material standards. Above-deck thermal insulation board shall comply with the standards in Table 1508.2.

[BF] TABLE 1508.2
MATERIAL STANDARDS FOR ROOF INSULATION

Cellular glass board	ASTM C 552
Composite boards	ASTM C 1289, Type III, IV, V or VI
Expanded polystyrene	ASTM C 578
Extruded polystyrene	ASTM C 578
Fiber-reinforced gypsum board	ASTM C 1278
Glass-faced gypsum board	ASTM C 1177
Mineral fiber insulation board	ASTM C 726
Perlite board	ASTM C 728
Polyisocyanurate board	ASTM C 1289, Type I or II
Wood fiberboard	ASTM C 208

SECTION 1509
RADIANT BARRIERS INSTALLED ABOVE DECK

[BF] 1509.1 General. A *radiant barrier* installed above a deck shall comply with Sections 1509.2 through 1509.4.

[BF] 1509.2 Fire testing. *Radiant barriers* shall be permitted for use above decks where the *radiant barrier* is covered with an approved roof covering and the system consisting of the *radiant barrier* and the roof covering complies with the requirements of either FM 4550 or UL 1256.

[BF] 1509.3 Installation. The low emittance surface of the *radiant barrier* shall face the continuous airspace between the *radiant barrier* and the roof covering.

[BF] 1509.4 Material standards. A *radiant barrier* installed above a deck shall comply with ASTM C 1313/1313M.

SECTION 1510
ROOFTOP STRUCTURES

[BG] 1510.1 General. The provisions of this section shall govern the construction of rooftop structures.

[BG] 1510.2 Penthouses. Penthouses in compliance with Sections 1510.2.1 through 1510.2.5 shall be considered as a portion of the story directly below the roof deck on which such penthouses are located. All other penthouses shall be considered as an additional story of the building.

[BG] 1510.2.1 Height above roof deck. Penthouses constructed on buildings of other than Type I construction shall not exceed 18 feet (5486 mm) in height above the roof deck as measured to the average height of the roof of the penthouse.

Exceptions:

1. Where used to enclose tanks or elevators that travel to the roof level, penthouses shall be permitted to have a maximum height of 28 feet (8534 mm) above the roof deck.
2. Penthouses located on the roof of buildings of Type I construction shall not be limited in height.

[BG] 1510.2.2 Area limitation. The aggregate area of penthouses and other enclosed rooftop structures shall not exceed one-third the area of the supporting roof deck. Such penthouses and other enclosed rooftop structures shall not be required to be included in determining the building area or number of stories as regulated by Section 503.1. The area of such penthouses shall not be included in determining the fire area specified in Section 901.7.

[BG] 1510.2.3 Use limitations. Penthouses shall not be used for purposes other than the shelter of mechanical or electrical equipment, tanks, or vertical shaft openings in the roof assembly.

[BG] 1510.2.4 Weather protection. Provisions such as louvers, louver blades or flashing shall be made to protect the mechanical and electrical equipment and the building interior from the elements.

[BG] 1510.2.5 Type of construction. Penthouses shall be constructed with walls, floors and roofs as required for the type of construction of the building on which such penthouses are built.

Exceptions:

1. On buildings of Type I construction, the exterior walls and roofs of penthouses with a *fire separation distance* greater than 5 feet (1524 mm) and less than 20 feet (6096 mm) shall be permitted to have not less than a 1-hour fire-resistance rating. The exterior walls and roofs of penthouses with a fire separation distance of 20 feet (6096 mm) or greater shall not be required to have a fire-resistance rating.
2. On buildings of Type I construction two stories or less in height above grade plane or of Type II construction, the exterior walls and roofs of penthouses with a *fire separation distance* greater than 5 feet (1524 mm) and less than 20 feet (6096 mm) shall be permitted to have not less than a 1-hour fire-resistance rating or a lesser fire-resistance rating as required by Table 602 and be constructed of fire-retardant-treated wood. The exterior walls and roofs of penthouses with a *fire separation distance* of 20 feet (6096 mm) or greater shall be permitted to be constructed of fire-retardant-treated wood and shall not be required to have a fire-resistance rating. Interior framing and walls shall be permitted to be constructed of fire-retardant-treated wood.
3. On buildings of Type III, IV or V construction, the exterior walls of penthouses with a fire separation distance greater than 5 feet (1524 mm) and less than 20 feet (6096 mm) shall be permitted to have not less than a 1-hour fire-resistance rating or a lesser fire-resistance rating as required by Table 602. On buildings of Type III, IV or VA construction, the exterior walls of penthouses with a fire separation distance of 20 feet (6096 mm) or greater shall be permitted to be of Type IV or noncombustible construction or fire-retardant-treated wood and shall not be required to have a fire-resistance rating.

[BG] 1510.3 Tanks. Tanks having a capacity of more than 500 gallons (1893 L) located on the roof deck of a building shall be supported on masonry, reinforced concrete, steel or Type IV construction provided that, where such supports are located in the building above the lowest *story*, the support shall be fire-resistance rated as required for Type IA construction.

[BG] 1510.3.1 Valve and drain. In the bottom or on the side near the bottom of the tank, a pipe or outlet, fitted with a suitable quick-opening valve for discharging the contents into a drain in an emergency shall be provided.

[BG] 1510.3.2 Location. Tanks shall not be placed over or near a stairway or an elevator shaft, unless there is a solid roof or floor underneath the tank.

[BG] 1510.3.3 Tank cover. Unenclosed roof tanks shall have covers sloping toward the perimeter of the tanks.

[BG] 1510.4 Cooling towers. Cooling towers located on the roof deck of a building and greater than 250 square feet (23.2 m^2) in base area or greater than 15 feet (4572 mm) in height above the roof deck, as measured to the highest point on the cooling tower, where the roof is greater than 50 feet (15 240 mm) in height above grade plane shall be constructed of noncombustible materials. The base area of cooling towers shall not exceed one-third the area of the supporting roof deck.

Exception: Drip boards and the enclosing construction shall be permitted to be of wood not less than 1 inch (25 mm) nominal thickness, provided the wood is covered on the exterior of the tower with noncombustible material.

[BG] 1510.5 Towers, spires, domes and cupolas. Towers, spires, domes and cupolas shall be of a type of construction having fire-resistance ratings not less than required for the building on top of which such tower, spire, dome or cupola is built. Towers, spires, domes and cupolas greater than 85 feet (25 908 mm) in height above grade plane as measured to the highest point on such structures, and either greater than 200 square feet (18.6 m^2) in horizontal area or used for any purpose other than a belfry or an architectural embellishment, shall be constructed of and supported on Type I or II construction.

[BG] 1510.5.1 Noncombustible construction required. Towers, spires, domes and cupolas greater than 60 feet (18 288 mm) in height above the highest point at which such structure contacts the roof as measured to the highest point on such structure, or that exceeds 200 square feet (18.6 m^2) in area at any horizontal section, or which is intended to be used for any purpose other than a belfry or architectural embellishment, or is located on the top of a building greater than 50 feet (1524 mm) in building height shall be constructed of and supported by noncombustible materials and shall be separated from the building below by construction having a fire-resistance rating of not less than 1.5 hours with openings protected in accordance with Section 712. Such structures located on the top of a building greater than 50 feet (15 240 mm) in building height shall be supported by noncombustible construction.

[BG] 1510.5.2 Towers and spires. Enclosed towers and spires shall have exterior walls constructed as required for the building on top of which such towers and spires are built. The roof covering of spires shall be not less than the same class of roof covering required for the building on top of which the spire is located.

[BG] 1510.6 Mechanical equipment screens. *Mechanical equipment screens* shall be constructed of the materials specified for the exterior walls in accordance with the type of construction of the building. Where the fire separation distance is greater than 5 feet (1524 mm), *mechanical equipment screens* shall not be required to comply with the fire-resistance rating requirements.

[BG] 1510.6.1 Height limitations. *Mechanical equipment screens* shall not exceed 18 feet (5486 mm) in height

above the roof deck, as measured to the highest point on the mechanical equipment screen.

Exception: Where located on buildings of Type IA construction, the height of *mechanical equipment screens* shall not be limited.

[BG] 1510.6.2 Type I, II, III and IV construction. Regardless of the requirements in Section 1510.6, *mechanical equipment screens* that are located on the roof decks of buildings of Type I, II, III or IV construction shall be permitted to be constructed of combustible materials in accordance with any one of the following limitations:

1. The fire separation distance shall be not less than 20 feet (6096 mm) and the height of the *mechanical equipment screen* above the roof deck shall not exceed 4 feet (1219 mm) as measured to the highest point on the *mechanical equipment screen.*
2. The fire separation distance shall be not less than 20 feet (6096 mm) and the *mechanical equipment screen* shall be constructed of fire-retardant-treated wood complying with Section 2303.2 for exterior installation.
3. Where exterior wall covering panels are used, the panels shall have a flame spread index of 25 or less when tested in the minimum and maximum thicknesses intended for use, with each face tested independently in accordance with ASTM E 84 or UL 723. The panels shall be tested in the minimum and maximum thicknesses intended for use in accordance with, and shall comply with the acceptance criteria of, NFPA 285 and shall be installed as tested. Where the panels are tested as part of an exterior wall assembly in accordance with NFPA 285, the panels shall be installed on the face of the *mechanical equipment screen* supporting structure in the same manner as they were installed on the tested exterior wall assembly.

[BS] 1510.6.3 Type V construction. The height of mechanical equipment screens located on the roof decks of buildings of Type V construction, as measured from grade plane to the highest point on the mechanical equipment screen, shall be permitted to exceed the maximum building height allowed for the building by other provisions of this code where complying with any one of the following limitations, provided the fire separation distance is greater than 5 feet (1524 mm):

1. Where the fire separation distance is not less than 20 feet (6096 mm), the height above grade plane of the mechanical equipment screen shall not exceed 4 feet (1219 mm) more than the maximum building height allowed;
2. The *mechanical equipment screen* shall be constructed of noncombustible materials;
3. The *mechanical equipment screen* shall be constructed of fire-retardant-treated wood complying with Section 2303.2 for exterior installation; or
4. Where the fire separation distance is not less than 20 feet (6096 mm), the *mechanical equipment screen* shall be constructed of materials having a flame spread index of 25 or less when tested in the minimum and maximum thicknesses intended for use with each face tested independently in accordance with ASTM E 84 or UL 723.

[BS] 1510.7 Photovoltaic panels and modules. Rooftop-mounted *photovoltaic panels* and *modules* shall be designed in accordance with this section.

[BS] 1510.7.1 Wind resistance. Rooftop-mounted *photovoltaic panels* and *modules* shall be designed for component and cladding wind loads in accordance with Chapter 16 using an effective wind area based on the dimensions of a single unit frame.

[BS] 1510.7.2 Fire classification. Rooftop-mounted *photovoltaic panels* and *modules* shall have the fire classification in accordance with Section 1505.9.

[BS] 1510.7.3 Installation. Rooftop-mounted *photovoltaic panels* and *modules* shall be installed in accordance with the manufacturer's instructions.

[BS] 1510.7.4 Photovoltaic panels and modules. Rooftop-mounted *photovoltaic panels* and *modules* shall be *listed* and labeled in accordance with UL 1703 and shall be installed in accordance with the manufacturer's instructions.

[BS] 1510.8 Other rooftop structures. Rooftop structures not regulated by Sections 1510.2 through 1510.7 shall comply with Sections 1510.8.1 through 1510.8.5, as applicable.

[BS] 1510.8.1 Aerial supports. Aerial supports shall be constructed of noncombustible materials.

Exception: Aerial supports not greater than 12 feet (3658 mm) in height as measured from the roof deck to the highest point on the aerial supports shall be permitted to be constructed of combustible materials.

[BS] 1510.8.2 Bulkheads. Bulkheads used for the shelter of mechanical or electrical equipment or vertical shaft openings in the roof assembly shall comply with Section 1510.2 as penthouses. Bulkheads used for any other purpose shall be considered as an additional story of the building.

[BS] 1510.8.3 Dormers. Dormers shall be of the same type of construction as required for the roof in which such dormers are located or the exterior walls of the building.

[BS] 1510.8.4 Fences. Fences and similar structures shall comply with Section 1510.6 as *mechanical equipment screens.*

1510.8.5 Flagpoles. Flagpoles and similar structures shall not be required to be constructed of noncombustible materials and shall not be limited in height or number.

[BS] 1510.9 Structural fire resistance. The structural frame and roof construction supporting imposed loads upon the roof by any rooftop structure shall comply with the requirements of Table 601. The fire-resistance reduction permitted by Table 601, Note a, shall not apply to roofs containing rooftop structures.

SECTION 1511
REROOFING

1511.1 General. Materials and methods of application used for recovering or replacing an existing roof covering shall comply with the requirements of Chapter 15.

Exceptions:

1. *Roof replacement* or *roof recover* of existing low-slope roof coverings shall not be required to meet the minimum design slope requirement of one-quarter unit vertical in 12 units horizontal (2-percent slope) in Section 1507 for roofs that provide positive roof drainage.
2. Recovering or replacing an existing roof covering shall not be required to meet the requirement for secondary (emergency overflow) drains or scuppers in Section 1503.4 for roofs that provide for positive roof drainage. For the purposes of this exception, existing secondary drainage or scupper systems required in accordance with this code shall not be removed unless they are replaced by secondary drains or scuppers designed and installed in accordance with Section 1503.4.

1511.2 Structural and construction loads. Structural roof components shall be capable of supporting the roof-covering system and the material and equipment loads that will be encountered during installation of the system.

1511.3 Roof replacement. *Roof replacement* shall include the removal of all existing layers of roof coverings down to the roof deck.

Exception: Where the existing roof assembly includes an ice barrier membrane that is adhered to the roof deck, the existing ice barrier membrane shall be permitted to remain in place and covered with an additional layer of ice barrier membrane in accordance with Section 1507.

1511.3.1 Roof recover. The installation of a new roof covering over an existing roof covering shall be permitted where any of the following conditions occur:

1. Where the new roof covering is installed in accordance with the roof covering manufacturer's approved instructions.
2. Complete and separate roofing systems, such as standing-seam metal roof panel systems, that are designed to transmit the roof loads directly to the building's structural system and that do not rely on existing roofs and roof coverings for support, shall not require the removal of existing roof coverings.
3. Metal panel, metal shingle and concrete and clay tile roof coverings shall be permitted to be installed over existing wood shake roofs when applied in accordance with Section 1511.4.
4. The application of a new protective coating over an existing spray polyurethane foam roofing system shall be permitted without tear off of existing roof coverings.

1511.3.1.1 Exceptions. A *roof recover* shall not be permitted where any of the following conditions occur:

1. Where the existing roof or roof covering is water soaked or has deteriorated to the point that the existing roof or roof covering is not adequate as a base for additional roofing.
2. Where the existing roof covering is slate, clay, cement or asbestos-cement tile.
3. Where the existing roof has two or more applications of any type of roof covering.

1511.4 Roof recovering. Where the application of a new roof covering over wood shingle or shake roofs creates a combustible concealed space, the entire existing surface shall be covered with gypsum board, mineral fiber, glass fiber or other *approved* materials securely fastened in place.

1511.5 Reinstallation of materials. Existing slate, clay or cement tile shall be permitted for reinstallation, except that damaged, cracked or broken slate or tile shall not be reinstalled. Existing vent flashing, metal edgings, drain outlets, collars and metal counterflashings shall not be reinstalled where rusted, damaged or deteriorated. Aggregate surfacing materials shall not be reinstalled.

1511.6 Flashings. Flashings shall be reconstructed in accordance with *approved* manufacturer's installation instructions. Metal flashing to which bituminous materials are to be adhered shall be primed prior to installation.

SECTION 1512
PHOTOVOLTAIC PANELS AND MODULES

1512.1 Photovoltaic panels and modules. *Photovoltaic panels* and *modules* installed upon a roof or as an integral part of a roof assembly shall comply with the requirements of this code and the *International Fire Code*.

CHAPTER 16

STRUCTURAL DESIGN

User note: Code change proposals to this chapter will be considered by the IBC – Structural Code Development Committee during the 2016 (Group B) Code Development Cycle. See explanation on page iv.

SECTION 1601
GENERAL

1601.1 Scope. The provisions of this chapter shall govern the structural design of buildings, structures and portions thereof regulated by this code.

SECTION 1602
DEFINITIONS AND NOTATIONS

1602.1 Definitions. The following terms are defined in Chapter 2:

ALLOWABLE STRESS DESIGN.

DEAD LOADS.

DESIGN STRENGTH.

DIAPHRAGM.

Diaphragm, blocked.

Diaphragm boundary.

Diaphragm chord.

ESSENTIAL FACILITIES.

FABRIC PARTITION.

FACTORED LOAD.

HELIPAD.

ICE-SENSITIVE STRUCTURE.

IMPACT LOAD.

LIMIT STATE.

LIVE LOAD.

LIVE LOAD (ROOF).

LOAD AND RESISTANCE FACTOR DESIGN (LRFD).

LOAD EFFECTS.

LOAD FACTOR.

LOADS.

NOMINAL LOADS.

OTHER STRUCTURES.

PANEL (PART OF A STRUCTURE).

RESISTANCE FACTOR.

RISK CATEGORY.

STRENGTH, NOMINAL.

STRENGTH, REQUIRED.

STRENGTH DESIGN.

SUSCEPTIBLE BAY.

VEHICLE BARRIER.

NOTATIONS.

D = Dead load.

D_i = Weight of ice in accordance with Chapter 10 of ASCE 7.

E = Combined effect of horizontal and vertical earthquake induced forces as defined in Section 12.4.2 of ASCE 7.

F = Load due to fluids with well-defined pressures and maximum heights.

F_a = Flood load in accordance with Chapter 5 of ASCE 7.

H = Load due to lateral earth pressures, ground water pressure or pressure of bulk materials.

L = Roof live load greater than 20 psf (0.96 kN/m^2) and floor live load.

L_r = Roof live load of 20 psf (0.96 kN/m^2) or less.

R = Rain load.

S = Snow load.

T = Self-straining load.

V_{asd} = Nominal design wind speed (3-second gust), miles per hour (mph) (km/hr) where applicable.

V_{ult} = Ultimate design wind speeds (3-second gust), miles per hour (mph) (km/hr) determined from Figure 1609.3(1), 1609.3(2), 1609.3(3) or ASCE 7.

W = Load due to wind pressure.

W_i = Wind-on-ice in accordance with Chapter 10 of ASCE 7.

SECTION 1603
CONSTRUCTION DOCUMENTS

1603.1 General. *Construction documents* shall show the size, section and relative locations of structural members with floor levels, column centers and offsets dimensioned. The design loads and other information pertinent to the structural design required by Sections 1603.1.1 through 1603.1.8 shall be indicated on the *construction documents*.

Exception: *Construction documents* for buildings constructed in accordance with the *conventional light-frame construction* provisions of Section 2308 shall indicate the following structural design information:

1. Floor and roof live loads.
2. Ground snow load, P_g.

3. Ultimate design wind speed, V_{ult}, (3-second gust), miles per hour (mph) (km/hr) and nominal design wind speed, V_{asd}, as determined in accordance with Section 1609.3.1 and wind exposure.
4. *Seismic design category* and *site class*.
5. Flood design data, if located in *flood hazard areas* established in Section 1612.3.
6. Design load-bearing values of soils.

1603.1.1 Floor live load. The uniformly distributed, concentrated and impact floor live load used in the design shall be indicated for floor areas. Use of live load reduction in accordance with Section 1607.10 shall be indicated for each type of live load used in the design.

1603.1.2 Roof live load. The roof live load used in the design shall be indicated for roof areas (Section 1607.12).

1603.1.3 Roof snow load data. The ground snow load, P_g, shall be indicated. In areas where the ground snow load, P_g, exceeds 10 pounds per square foot (psf) (0.479 kN/m^2), the following additional information shall also be provided, regardless of whether snow loads govern the design of the roof:

1. Flat-roof snow load, P_f.
2. Snow exposure factor, C_e.
3. Snow load importance factor, I_s.
4. Thermal factor, C_t.
5. Drift surcharge load(s), P_d, where the sum of P_d and P_f exceeds 20 psf (0.96 kN/m^2).
6. Width of snow drift(s), w.

1603.1.4 Wind design data. The following information related to wind loads shall be shown, regardless of whether wind loads govern the design of the lateral force-resisting system of the structure:

1. Ultimate design wind speed, V_{ult}, (3-second gust), miles per hour (km/hr) and nominal design wind speed, V_{asd}, as determined in accordance with Section 1609.3.1.
2. *Risk category*.
3. Wind exposure. Applicable wind direction if more than one wind exposure is utilized.
4. Applicable internal pressure coefficient.
5. Design wind pressures to be used for exterior component and cladding materials not specifically designed by the *registered design professional* responsible for the design of the structure, psf (kN/m^2).

1603.1.5 Earthquake design data. The following information related to seismic loads shall be shown, regardless of whether seismic loads govern the design of the lateral force-resisting system of the structure:

1. *Risk category*.
2. Seismic importance factor, I_e.
3. Mapped spectral response acceleration parameters, S_S and S_1.
4. *Site class*.
5. Design spectral response acceleration parameters, S_{DS} and S_{D1}.
6. *Seismic design category*.
7. Basic seismic force-resisting system(s).
8. Design base shear(s).
9. Seismic response coefficient(s), *CS*.
10. Response modification coefficient(s), *R*.
11. Analysis procedure used.

1603.1.6 Geotechnical information. The design load-bearing values of soils shall be shown on the *construction documents*.

1603.1.7 Flood design data. For buildings located in whole or in part in *flood hazard areas* as established in Section 1612.3, the documentation pertaining to design, if required in Section 1612.5, shall be included and the following information, referenced to the datum on the community's Flood Insurance Rate Map (FIRM), shall be shown, regardless of whether flood loads govern the design of the building:

1. Flood design class assigned according to ASCE 24.
2. In *flood hazard areas* other than *coastal high hazard areas* or *coastal A zones*, the elevation of the proposed lowest floor, including the basement.
3. In *flood hazard areas* other than *coastal high hazard areas* or *coastal A zones*, the elevation to which any nonresidential building will be dry floodproofed.
4. In *coastal high hazard areas* and *coastal A zones*, the proposed elevation of the bottom of the lowest horizontal structural member of the lowest floor, including the basement.

1603.1.8 Special loads. Special loads that are applicable to the design of the building, structure or portions thereof shall be indicated along with the specified section of this code that addresses the special loading condition.

1603.1.8.1 Photovoltaic panel systems. The dead load of rooftop-mounted *photovoltaic panel systems*, including rack support systems, shall be indicated on the construction documents.

SECTION 1604
GENERAL DESIGN REQUIREMENTS

1604.1 General. Building, structures and parts thereof shall be designed and constructed in accordance with strength design, *load and resistance factor design*, *allowable stress design*, empirical design or conventional construction methods, as permitted by the applicable material chapters.

1604.2 Strength. Buildings and other structures, and parts thereof, shall be designed and constructed to support safely the factored loads in load combinations defined in this code without exceeding the appropriate strength limit states for the

materials of construction. Alternatively, buildings and other structures, and parts thereof, shall be designed and constructed to support safely the *nominal loads* in load combinations defined in this code without exceeding the appropriate specified allowable stresses for the materials of construction.

Loads and forces for occupancies or uses not covered in this chapter shall be subject to the approval of the *building official.*

1604.3 Serviceability. Structural systems and members thereof shall be designed to have adequate stiffness to limit deflections and lateral drift. See Section 12.12.1 of ASCE 7 for drift limits applicable to earthquake loading.

1604.3.1 Deflections. The deflections of structural members shall not exceed the more restrictive of the limitations of Sections 1604.3.2 through 1604.3.5 or that permitted by Table 1604.3.

1604.3.2 Reinforced concrete. The deflection of reinforced concrete structural members shall not exceed that permitted by ACI 318.

1604.3.3 Steel. The deflection of steel structural members shall not exceed that permitted by AISC 360, AISI S100, ASCE 8, SJI CJ, SJI JG, SJI K or SJI LH/DLH, as applicable.

1604.3.4 Masonry. The deflection of masonry structural members shall not exceed that permitted by TMS 402/ACI 530/ASCE 5.

1604.3.5 Aluminum. The deflection of aluminum structural members shall not exceed that permitted by AA ADM1.

1604.3.6 Limits. The deflection limits of Section 1604.3.1 shall be used unless more restrictive deflection limits are required by a referenced standard for the element or finish material.

1604.4 Analysis. *Load effects* on structural members and their connections shall be determined by methods of structural analysis that take into account equilibrium, general stability, geometric compatibility and both short- and long-term material properties.

TABLE 1604.3
DEFLECTION LIMITS[a, b, c, h, i]

CONSTRUCTION	L	S or W[f]	$D + L$[d, g]
Roof members:[e]			
Supporting plaster or stucco ceiling	$l/360$	$l/360$	$l/240$
Supporting nonplaster ceiling	$l/240$	$l/240$	$l/180$
Not supporting ceiling	$l/180$	$l/180$	$l/120$
Floor members	$l/360$	—	$l/240$
Exterior walls:			
With plaster or stucco finishes	—	$l/360$	—
With other brittle finishes	—	$l/240$	—
With flexible finishes	—	$l/120$	—
Interior partitions:[b]			
With plaster or stucco finishes	$l/360$	—	—
With other brittle finishes	$l/240$	—	—
With flexible finishes	$l/120$	—	—
Farm buildings	—	—	$l/180$
Greenhouses	—	—	$l/120$

For SI: 1 foot = 304.8 mm.

a. For structural roofing and siding made of formed metal sheets, the total load deflection shall not exceed $l/60$. For secondary roof structural members supporting formed metal roofing, the live load deflection shall not exceed $l/150$. For secondary wall members supporting formed metal siding, the design wind load deflection shall not exceed $l/90$. For roofs, this exception only applies when the metal sheets have no roof covering.

b. Flexible, folding and portable partitions are not governed by the provisions of this section. The deflection criterion for interior partitions is based on the horizontal load defined in Section 1607.14.

c. See Section 2403 for glass supports.

d. The deflection limit for the $D+L$ load combination only applies to the deflection due to the creep component of long-term dead load deflection plus the short-term live load deflection. For wood structural members that are dry at time of installation and used under dry conditions in accordance with the AWC NDS, the creep component of the long-term deflection shall be permitted to be estimated as the immediate dead load deflection resulting from $0.5D$. For wood structural members at all other moisture conditions, the creep component of the long-term deflection is permitted to be estimated as the immediate dead load deflection resulting from D. The value of $0.5D$ shall not be used in combination with AWC NDS provisions for long-term loading.

e. The above deflections do not ensure against ponding. Roofs that do not have sufficient slope or camber to ensure adequate drainage shall be investigated for ponding. See Section 1611 for rain and ponding requirements and Section 1503.4 for roof drainage requirements.

f. The wind load is permitted to be taken as 0.42 times the "component and cladding" loads for the purpose of determining deflection limits herein. Where members support glass in accordance with Section 2403 using the deflection limit therein, the wind load shall be no less than 0.6 times the "component and cladding" loads for the purpose of determining deflection.

g. For steel structural members, the dead load shall be taken as zero.

h. For aluminum structural members or aluminum panels used in skylights and sloped glazing framing, roofs or walls of sunroom additions or patio covers not supporting edge of glass or aluminum sandwich panels, the total load deflection shall not exceed $l/60$. For continuous aluminum structural members supporting edge of glass, the total load deflection shall not exceed $l/175$ for each glass lite or $l/60$ for the entire length of the member, whichever is more stringent. For aluminum sandwich panels used in roofs or walls of sunroom additions or patio covers, the total load deflection shall not exceed $l/120$.

i. For cantilever members, l shall be taken as twice the length of the cantilever.

Members that tend to accumulate residual deformations under repeated service loads shall have included in their analysis the added eccentricities expected to occur during their service life.

Any system or method of construction to be used shall be based on a rational analysis in accordance with well-established principles of mechanics. Such analysis shall result in a system that provides a complete load path capable of transferring loads from their point of origin to the load-resisting elements.

The total lateral force shall be distributed to the various vertical elements of the lateral force-resisting system in proportion to their rigidities, considering the rigidity of the horizontal bracing system or diaphragm. Rigid elements assumed not to be a part of the lateral force-resisting system are permitted to be incorporated into buildings provided their effect on the action of the system is considered and provided for in the design. A diaphragm is rigid for the purpose of distribution of story shear and torsional moment when the lateral deformation of the diaphragm is less than or equal to two times the average story drift. Where required by ASCE 7, provisions shall be made for the increased forces induced on resisting elements of the structural system resulting from torsion due to eccentricity between the center of application of the lateral forces and the center of rigidity of the lateral force-resisting system.

Every structure shall be designed to resist the overturning effects caused by the lateral forces specified in this chapter. See Section 1609 for wind loads, Section 1610 for lateral soil loads and Section 1613 for earthquake loads.

1604.5 Risk category. Each building and structure shall be assigned a risk category in accordance with Table 1604.5. Where a referenced standard specifies an occupancy category, the risk category shall not be taken as lower than the occupancy category specified therein. Where a referenced standard specifies that the assignment of a risk category be in accordance with ASCE 7, Table 1.5-1, Table 1604.5 shall be used in lieu of ASCE 7, Table 1.5-1.

1604.5.1 Multiple occupancies. Where a building or structure is occupied by two or more occupancies not included in the same *risk category*, it shall be assigned the classification of the highest *risk category* corresponding to the various occupancies. Where buildings or structures have two or more portions that are structurally separated, each portion shall be separately classified. Where a separated portion of a building or structure provides required access to, required egress from or shares life safety components with another portion having a higher *risk category*, both portions shall be assigned to the higher *risk category*.

1604.6 In-situ load tests. The *building official* is authorized to require an engineering analysis or a load test, or both, of any construction whenever there is reason to question the safety of the construction for the intended occupancy. Engineering analysis and load tests shall be conducted in accordance with Section 1709.

1604.7 Preconstruction load tests. Materials and methods of construction that are not capable of being designed by *approved* engineering analysis or that do not comply with the applicable referenced standards, or alternative test procedures in accordance with Section 1707, shall be load tested in accordance with Section 1710.

1604.8 Anchorage. Buildings and other structures, and portions thereof, shall be provided with anchorage in accordance with Sections 1604.8.1 through 1604.8.3, as applicable.

1604.8.1 General. Anchorage of the roof to walls and columns, and of walls and columns to foundations, shall be provided to resist the uplift and sliding forces that result from the application of the prescribed loads.

1604.8.2 Structural walls. Walls that provide vertical load-bearing resistance or lateral shear resistance for a portion of the structure shall be anchored to the roof and to all floors and members that provide lateral support for the wall or that are supported by the wall. The connections shall be capable of resisting the horizontal forces specified in Section 1.4.5 of ASCE 7 for walls of structures assigned to *Seismic Design Category* A and to Section 12.11 of ASCE 7 for walls of structures assigned to all other *seismic design categories*. Required anchors in masonry walls of hollow units or cavity walls shall be embedded in a reinforced grouted structural element of the wall. See Sections 1609 for wind design requirements and 1613 for earthquake design requirements.

1604.8.3 Decks. Where supported by attachment to an *exterior wall*, decks shall be positively anchored to the primary structure and designed for both vertical and lateral loads as applicable. Such attachment shall not be accomplished by the use of toenails or nails subject to withdrawal. Where positive connection to the primary building structure cannot be verified during inspection, decks shall be self-supporting. Connections of decks with cantilevered framing members to exterior walls or other framing members shall be designed for both of the following:

1. The reactions resulting from the dead load and live load specified in Table 1607.1, or the snow load specified in Section 1608, in accordance with Section 1605, acting on all portions of the deck.
2. The reactions resulting from the dead load and live load specified in Table 1607.1, or the snow load specified in Section 1608, in accordance with Section 1605, acting on the cantilevered portion of the deck, and no live load or snow load on the remaining portion of the deck.

1604.9 Counteracting structural actions. Structural members, systems, components and cladding shall be designed to resist forces due to earthquakes and wind, with consideration of overturning, sliding and uplift. Continuous load paths shall be provided for transmitting these forces to the foundation. Where sliding is used to isolate the elements, the effects of friction between sliding elements shall be included as a force.

1604.10 Wind and seismic detailing. Lateral force-resisting systems shall meet seismic detailing requirements and limitations prescribed in this code and ASCE 7, excluding Chapter 14 and Appendix 11A, even when wind *load effects* are greater than seismic *load effects*.

SECTION 1605
LOAD COMBINATIONS

1605.1 General. Buildings and other structures and portions thereof shall be designed to resist:

1. The load combinations specified in Section 1605.2, 1605.3.1 or 1605.3.2;
2. The load combinations specified in Chapters 18 through 23; and
3. The seismic load effects including overstrength factor in accordance with Section 12.4.3 of ASCE 7 where required by Section 12.2.5.2, 12.3.3.3 or 12.10.2.1 of ASCE 7. With the simplified procedure of ASCE 7 Section 12.14, the seismic load effects including overstrength factor in accordance with Section 12.14.3.2 of ASCE 7 shall be used.

TABLE 1604.5
RISK CATEGORY OF BUILDINGS AND OTHER STRUCTURES

RISK CATEGORY	NATURE OF OCCUPANCY
I	Buildings and other structures that represent a low hazard to human life in the event of failure, including but not limited to: • Agricultural facilities. • Certain temporary facilities. • Minor storage facilities.
II	Buildings and other structures except those listed in Risk Categories I, III and IV.
III	Buildings and other structures that represent a substantial hazard to human life in the event of failure, including but not limited to: • Buildings and other structures whose primary occupancy is public assembly with an occupant load greater than 300. • Buildings and other structures containing Group E occupancies with an occupant load greater than 250. • Buildings and other structures containing educational occupancies for students above the 12th grade with an occupant load greater than 500. • Group I-2 occupancies with an occupant load of 50 or more resident care recipients but not having surgery or emergency treatment facilities. • Group I-3 occupancies. • Any other occupancy with an occupant load greater than 5,000.[a] • Power-generating stations, water treatment facilities for potable water, wastewater treatment facilities and other public utility facilities not included in Risk Category IV. • Buildings and other structures not included in Risk Category IV containing quantities of toxic or explosive materials that: Exceed maximum allowable quantities per control area as given in Table 307.1(1) or 307.1(2) or per outdoor control area in accordance with the *International Fire Code*; and Are sufficient to pose a threat to the public if released.[b]
IV	Buildings and other structures designated as essential facilities, including but not limited to: • Group I-2 occupancies having surgery or emergency treatment facilities. • Fire, rescue, ambulance and police stations and emergency vehicle garages. • Designated earthquake, hurricane or other emergency shelters. • Designated emergency preparedness, communications and operations centers and other facilities required for emergency response. • Power-generating stations and other public utility facilities required as emergency backup facilities for Risk Category IV structures. • Buildings and other structures containing quantities of highly toxic materials that: Exceed maximum allowable quantities per control area as given in Table 307.1(2) or per outdoor control area in accordance with the *International Fire Code*; and Are sufficient to pose a threat to the public if released.[b] • Aviation control towers, air traffic control centers and emergency aircraft hangars. • Buildings and other structures having critical national defense functions. • Water storage facilities and pump structures required to maintain water pressure for fire suppression.

a. For purposes of occupant load calculation, occupancies required by Table 1004.1.2 to use gross floor area calculations shall be permitted to use net floor areas to determine the total occupant load.

b. Where approved by the building official, the classification of buildings and other structures as Risk Category III or IV based on their quantities of toxic, highly toxic or explosive materials is permitted to be reduced to Risk Category II, provided it can be demonstrated by a hazard assessment in accordance with Section 1.5.3 of ASCE 7 that a release of the toxic, highly toxic or explosive materials is not sufficient to pose a threat to the public.

Applicable loads shall be considered, including both earthquake and wind, in accordance with the specified load combinations. Each load combination shall also be investigated with one or more of the variable loads set to zero.

Where the load combinations with overstrength factor in Section 12.4.3.2 of ASCE 7 apply, they shall be used as follows:

1. The basic combinations for strength design with overstrength factor in lieu of Equations 16-5 and 16-7 in Section 1605.2.
2. The basic combinations for *allowable stress design* with overstrength factor in lieu of Equations 16-12, 16-14 and 16-16 in Section 1605.3.1.
3. The basic combinations for *allowable stress design* with overstrength factor in lieu of Equations 16-21 and 16-22 in Section 1605.3.2.

1605.1.1 Stability. Regardless of which load combinations are used to design for strength, where overall structure stability (such as stability against overturning, sliding, or buoyancy) is being verified, use of the load combinations specified in Section 1605.2 or 1605.3 shall be permitted. Where the load combinations specified in Section 1605.2 are used, strength reduction factors applicable to soil resistance shall be provided by a *registered design professional.* The stability of retaining walls shall be verified in accordance with Section 1807.2.3.

1605.2 Load combinations using strength design or load and resistance factor design. Where strength design or load and resistance factor design is used, buildings and other structures, and portions thereof, shall be designed to resist the most critical effects resulting from the following combinations of factored loads:

$1.4(D+F)$ **(Equation 16-1)**

$1.2(D+F)+1.6(L+H)+0.5(L_r \text{ or } S \text{ or } R)$ **(Equation 16-2)**

$1.2(D+F)+1.6(L_r \text{ or } S \text{ or } R)+1.6H+(f_1L \text{ or } 0.5W)$ **(Equation 16-3)**

$1.2(D+F)+1.0W+f_1L+1.6H+0.5(L_r \text{ or } S \text{ or } R)$ **(Equation 16-4)**

$1.2(D+F)+1.0E+f_1L+1.6H+f_2S$ **(Equation 16-5)**

$0.9D+1.0W+1.6H$ **(Equation 16-6)**

$0.9(D+F)+1.0E+1.6H$ **(Equation 16-7)**

where:

f_1 = 1 for places of public assembly live loads in excess of 100 pounds per square foot (4.79 kN/m^2), and parking garages; and 0.5 for other live loads.

f_2 = 0.7 for roof configurations (such as saw tooth) that do not shed snow off the structure, and 0.2 for other roof configurations.

Exceptions:

1. Where other factored load combinations are specifically required by other provisions of this code, such combinations shall take precedence.
2. Where the effect of H resists the primary variable load effect, a load factor of 0.9 shall be included with H where H is permanent and H shall be set to zero for all other conditions.

1605.2.1 Other loads. Where flood loads, F_a, are to be considered in the design, the load combinations of Section 2.3.3 of ASCE 7 shall be used. Where self-straining loads, T, are considered in design, their structural effects in combination with other loads shall be determined in accordance with Section 2.3.5 of ASCE 7. Where an ice-sensitive structure is subjected to loads due to atmospheric icing, the load combinations of Section 2.3.4 of ASCE 7 shall be considered.

1605.3 Load combinations using allowable stress design.

1605.3.1 Basic load combinations. Where *allowable stress design* (working stress design), as permitted by this code, is used, structures and portions thereof shall resist the most critical effects resulting from the following combinations of loads:

$D+F$ **(Equation 16-8)**

$D+H+F+L$ **(Equation 16-9)**

$D+H+F+(L_r \text{ or } S \text{ or } R)$ **(Equation 16-10)**

$D+H+F+0.75(L)+0.75(L_r \text{ or } S \text{ or } R)$ **(Equation 16-11)**

$D+H+F+(0.6W \text{ or } 0.7E)$ **(Equation 16-12)**

$D+H+F+0.75(0.6W)+0.75L+0.75(L_r \text{ or } S \text{ or } R)$ **(Equation 16-13)**

$D+H+F+0.75(0.7E)+0.75L+0.75S$ **(Equation 16-14)**

$0.6D+0.6W+H$ **(Equation 16-15)**

$0.6(D+F)+0.7E+H$ **(Equation 16-16)**

Exceptions:

1. Crane hook loads need not be combined with roof live load or with more than three-fourths of the snow load or one-half of the wind load.
2. Flat roof snow loads of 30 psf (1.44 kN/m^2) or less and roof live loads of 30 psf (1.44 kN/m^2) or less need not be combined with seismic loads. Where flat roof snow loads exceed 30 psf (1.44 kN/m^2), 20 percent shall be combined with seismic loads.
3. Where the effect of H resists the primary variable load effect, a load factor of 0.6 shall be included with H where H is permanent and H shall be set to zero for all other conditions.
4. In Equation 16-15, the wind load, W, is permitted to be reduced in accordance with Exception 2 of Section 2.4.1 of ASCE 7.
5. In Equation 16-16, 0.6 D is permitted to be increased to 0.9 D for the design of special reinforced masonry shear walls complying with Chapter 21.

1605.3.1.1 Stress increases. Increases in allowable stresses specified in the appropriate material chapter or the referenced standards shall not be used with the load combinations of Section 1605.3.1, except that increases shall be permitted in accordance with Chapter 23.

1605.3.1.2 Other loads. Where flood loads, F_a, are to be considered in design, the load combinations of Section 2.4.2 of ASCE 7 shall be used. Where self-straining loads, T, are considered in design, their structural effects in combination with other loads shall be determined in accordance with Section 2.4.4 of ASCE 7. Where an ice-sensitive structure is subjected to loads due to atmospheric icing, the load combinations of Section 2.4.3 of ASCE 7 shall be considered.

1605.3.2 Alternative basic load combinations. In lieu of the basic load combinations specified in Section 1605.3.1, structures and portions thereof shall be permitted to be designed for the most critical effects resulting from the following combinations. When using these alternative basic load combinations that include wind or seismic loads, allowable stresses are permitted to be increased or load combinations reduced where permitted by the material chapter of this code or the referenced standards. For load combinations that include the counteracting effects of dead and wind loads, only two-thirds of the minimum dead load likely to be in place during a design wind event shall be used. When using allowable stresses that have been increased or load combinations that have been reduced as permitted by the material chapter of this code or the referenced standards, where wind loads are calculated in accordance with Chapters 26 through 31 of ASCE 7, the coefficient (ω) in the following equations shall be taken as 1.3. For other wind loads, (ω) shall be taken as 1. When allowable stresses have not been increased or load combinations have not been reduced as permitted by the material chapter of this code or the referenced standards, (ω) shall be taken as 1. When using these alternative load combinations to evaluate sliding, overturning and soil bearing at the soil-structure interface, the reduction of foundation overturning from Section 12.13.4 in ASCE 7 shall not be used. When using these alternative basic load combinations for proportioning foundations for loadings, which include seismic loads, the vertical seismic *load effect*, E_v, in Equation 12.4-4 of ASCE 7 is permitted to be taken equal to zero.

$D + L + (L_r \text{ or } S \text{ or } R)$ **(Equation 16-17)**

$D + L + 0.6\,\omega W$ **(Equation 16-18)**

$D + L + 0.6\,\omega W + S/2$ **(Equation 16-19)**

$D + L + S + 0.6\,\omega W/2$ **(Equation 16-20)**

$D + L + S + E/1.4$ **(Equation 16-21)**

$0.9D + E/1.4$ **(Equation 16-22)**

Exceptions:

1. Crane hook loads need not be combined with roof live loads or with more than three-fourths of the snow load or one-half of the wind load.
2. Flat roof snow loads of 30 psf (1.44 kN/m^2) or less and roof live loads of 30 psf (1.44 kN/m^2) or less need not be combined with seismic loads. Where flat roof snow loads exceed 30 psf (1.44 kN/m^2), 20 percent shall be combined with seismic loads.

1605.3.2.1 Other loads. Where F, H or T are to be considered in the design, each applicable load shall be added to the combinations specified in Section 1605.3.2. Where self-straining loads, T, are considered in design, their structural effects in combination with other loads shall be determined in accordance with Section 2.4.4 of ASCE 7.

SECTION 1606
DEAD LOADS

1606.1 General. Dead loads are those loads defined in Chapter 2 of this code. Dead loads shall be considered permanent loads.

1606.2 Design dead load. For purposes of design, the actual weights of materials of construction and fixed service equipment shall be used. In the absence of definite information, values used shall be subject to the approval of the *building official*.

SECTION 1607
LIVE LOADS

1607.1 General. Live loads are those loads defined in Chapter 2 of this code.

1607.2 Loads not specified. For occupancies or uses not designated in Table 1607.1, the live load shall be determined in accordance with a method *approved* by the *building official*.

1607.3 Uniform live loads. The live loads used in the design of buildings and other structures shall be the maximum loads expected by the intended use or occupancy but shall in no case be less than the minimum uniformly distributed live loads given in Table 1607.1.

1607.4 Concentrated live loads. Floors and other similar surfaces shall be designed to support the uniformly distributed live loads prescribed in Section 1607.3 or the concentrated live loads, given in Table 1607.1, whichever produces the greater *load effects*. Unless otherwise specified, the indicated concentration shall be assumed to be uniformly distributed over an area of $2^1/_2$ feet by $2^1/_2$ feet (762 mm by 762 mm) and shall be located so as to produce the maximum *load effects* in the structural members.

1607.5 Partition loads. In office buildings and in other buildings where partition locations are subject to change, provisions for partition weight shall be made, whether or not partitions are shown on the construction documents, unless the specified live load is 80 psf (3.83 kN/m^2) or greater. The partition load shall be not less than a uniformly distributed live load of 15 psf (0.72 kN/m^2).

TABLE 1607.1
MINIMUM UNIFORMLY DISTRIBUTED LIVE LOADS, L_o, AND MINIMUM CONCENTRATED LIVE LOADS[g]

OCCUPANCY OR USE	UNIFORM (psf)	CONCENTRATED (pounds)
1. Apartments (see residential)	—	—
2. Access floor systems		
Office use	50	2,000
Computer use	100	2,000
3. Armories and drill rooms	150[m]	—
4. Assembly areas		
Fixed seats (fastened to floor)	60[m]	
Follow spot, projections and control rooms	50	
Lobbies	100[m]	—
Movable seats	100[m]	
Stage floors	150[m]	
Platforms (assembly)	100[m]	
Other assembly areas	100[m]	
5. Balconies and decks[h]	Same as occupancy served	—
6. Catwalks	40	300
7. Cornices	60	—
8. Corridors		
First floor	100	
Other floors	Same as occupancy served except as indicated	—
9. Dining rooms and restaurants	100[m]	—
10. Dwellings (see residential)	—	—
11. Elevator machine room and control room grating (on area of 2 inches by 2 inches)	—	300
12. Finish light floor plate construction (on area of 1 inch by 1 inch)	—	200
13. Fire escapes	100	
On single-family dwellings only	40	—
14. Garages (passenger vehicles only)	40[m]	Note a
Trucks and buses	See Section 1607.7	
15. Handrails, guards and grab bars	See Section 1607.8	
16. Helipads	See Section 1607.6	
17. Hospitals		
Corridors above first floor	80	1,000
Operating rooms, laboratories	60	1,000
Patient rooms	40	1,000
18. Hotels (see residential)	—	—
19. Libraries		
Corridors above first floor	80	1,000
Reading rooms	60	1,000
Stack rooms	150[b, m]	1,000
20. Manufacturing		
Heavy	250[m]	3,000
Light	125[m]	2,000
21. Marquees, except one- and two-family dwellings	75	—
22. Office buildings		
Corridors above first floor	80	2,000
File and computer rooms shall be designed for heavier loads based on anticipated occupancy	—	—
Lobbies and first-floor corridors	100	2,000
Offices	50	2,000

(continued)

TABLE 1607.1—continued
MINIMUM UNIFORMLY DISTRIBUTED LIVE LOADS, L_o, AND MINIMUM CONCENTRATED LIVE LOADS[g]

OCCUPANCY OR USE	UNIFORM (psf)	CONCENTRATED (pounds)
23. Penal institutions		
Cell blocks	40	—
Corridors	100	
24. Recreational uses:		
Bowling alleys, poolrooms and similar uses	75[m]	
Dance halls and ballrooms	100[m]	
Gymnasiums	100[m]	
Ice skating rink	250[m]	—
Reviewing stands, grandstands and bleachers	100[c, m]	
Roller skating rink	100[m]	
Stadiums and arenas with fixed seats (fastened to floor)	60[c, m]	
25. Residential		
One- and two-family dwellings		
Uninhabitable attics without storage[i]	10	
Uninhabitable attics with storage[i, j, k]	20	
Habitable attics and sleeping areas[k]	30	
Canopies, including marquees	20	—
All other areas	40	
Hotels and multifamily dwellings		
Private rooms and corridors serving them	40	
Public rooms[m] and corridors serving them	100	
26. Roofs		
All roof surfaces subject to maintenance workers		300
Awnings and canopies:		
Fabric construction supported by a skeleton structure	5 Nonreducible	
All other construction, except one- and two-family dwellings	20	
Ordinary flat, pitched, and curved roofs (that are not occupiable)	20	
Primary roof members exposed to a work floor		
Single panel point of lower chord of roof trusses or any point along primary structural members supporting roofs over manufacturing, storage warehouses, and repair garages		2,000
All other primary roof members		300
Occupiable roofs:		
Roof gardens	100	
Assembly areas	100[m]	
All other similar areas	Note 1	Note 1
27. Schools		
Classrooms	40	1,000
Corridors above first floor	80	1,000
First-floor corridors	100	1,000
28. Scuttles, skylight ribs and accessible ceilings	—	200
29. Sidewalks, vehicular driveways and yards, subject to trucking	250[d, m]	8,000[e]

(continued)

TABLE 1607.1—continued
MINIMUM UNIFORMLY DISTRIBUTED LIVE LOADS, L_o, AND MINIMUM CONCENTRATED LIVE LOADS[g]

OCCUPANCY OR USE	UNIFORM (psf)	CONCENTRATED (pounds)
30. Stairs and exits		
One- and two-family dwellings	40	300[f]
All other	100	300[f]
31. Storage warehouses (shall be designed for heavier loads if required for anticipated storage)		—
Heavy	250[m]	
Light	125[m]	
32. Stores		
Retail		
First floor	100	1,000
Upper floors	75	1,000
Wholesale, all floors	125[m]	1,000
33. Vehicle barriers	See Section 1607.8.3	
34. Walkways and elevated platforms (other than exitways)	60	—
35. Yards and terraces, pedestrians	100[m]	—

For SI: 1 inch = 25.4 mm, 1 square inch = 645.16 mm^2,
1 square foot = 0.0929 m^2,
1 pound per square foot = 0.0479 kN/m^2, 1 pound = 0.004448 kN,
1 pound per cubic foot = 16 kg/m^3.

a. Floors in garages or portions of buildings used for the storage of motor vehicles shall be designed for the uniformly distributed live loads of this Table or the following concentrated loads: (1) for garages restricted to passenger vehicles accommodating not more than nine passengers, 3,000 pounds acting on an area of $4^1/_2$ inches by $4^1/_2$ inches; (2) for mechanical parking structures without slab or deck that are used for storing passenger vehicles only, 2,250 pounds per wheel.

b. The loading applies to stack room floors that support nonmobile, double-faced library book stacks, subject to the following limitations:
   1. The nominal book stack unit height shall not exceed 90 inches;
   2. The nominal shelf depth shall not exceed 12 inches for each face; and
   3. Parallel rows of double-faced book stacks shall be separated by aisles not less than 36 inches wide.

c. Design in accordance with ICC 300.

d. Other uniform loads in accordance with an approved method containing provisions for truck loadings shall be considered where appropriate.

e. The concentrated wheel load shall be applied on an area of 4.5 inches by 4.5 inches.

f. The minimum concentrated load on stair treads shall be applied on an area of 2 inches by 2 inches. This load need not be assumed to act concurrently with the uniform load.

g. Where snow loads occur that are in excess of the design conditions, the structure shall be designed to support the loads due to the increased loads caused by drift buildup or a greater snow design determined by the building official (see Section 1608).

h. See Section 1604.8.3 for decks attached to exterior walls.

i. Uninhabitable attics without storage are those where the maximum clear height between the joists and rafters is less than 42 inches, or where there are not two or more adjacent trusses with web configurations capable of accommodating an assumed rectangle 42 inches in height by 24 inches in width, or greater, within the plane of the trusses. This live load need not be assumed to act concurrently with any other live load requirements.

(continued)

TABLE 1607.1—continued
MINIMUM UNIFORMLY DISTRIBUTED LIVE LOADS, L_o, AND MINIMUM CONCENTRATED LIVE LOADS[g]

j. Uninhabitable attics with storage are those where the maximum clear height between the joists and rafters is 42 inches or greater, or where there are two or more adjacent trusses with web configurations capable of accommodating an assumed rectangle 42 inches in height by 24 inches in width, or greater, within the plane of the trusses.

The live load need only be applied to those portions of the joists or truss bottom chords where both of the following conditions are met:
   i. The attic area is accessible from an opening not less than 20 inches in width by 30 inches in length that is located where the clear height in the attic is a minimum of 30 inches; and
   ii. The slopes of the joists or truss bottom chords are no greater than two units vertical in 12 units horizontal.

The remaining portions of the joists or truss bottom chords shall be designed for a uniformly distributed concurrent live load of not less than 10 pounds per square foot.

k. Attic spaces served by stairways other than the pull-down type shall be designed to support the minimum live load specified for habitable attics and sleeping rooms.

l. Areas of occupiable roofs, other than roof gardens and assembly areas, shall be designed for appropriate loads as approved by the building official. Unoccupied landscaped areas of roofs shall be designed in accordance with Section 1607.12.3.

m. Live load reduction is not permitted unless specific exceptions of Section 1607.10 apply.

1607.6 Helipads. Helipads shall be designed for the following live loads:

1. A uniform live load, L, as specified below. This load shall not be reduced.
   1.1. 40 psf (1.92 kN/m^2) where the design basis helicopter has a maximum take-off weight of 3,000 pounds (13.35 kN) or less.
   1.2. 60 psf (2.87 kN/m^2) where the design basis helicopter has a maximum take-off weight greater than 3,000 pounds (13.35 kN).
2. A single concentrated live load, L, of 3,000 pounds (13.35 kN) applied over an area of 4.5 inches by 4.5 inches (114 mm by 114 mm) and located so as to produce the maximum load effects on the structural elements under consideration. The concentrated load is not required to act concurrently with other uniform or concentrated live loads.
3. Two single concentrated live loads, L, 8 feet (2438 mm) apart applied on the landing pad (representing the helicopter's two main landing gear, whether skid type or wheeled type), each having a magnitude of 0.75 times the maximum take-off weight of the helicopter, and located so as to produce the maximum load effects on the structural elements under consideration. The concentrated loads shall be applied over an area of 8 inches by 8 inches (203 mm by 203 mm) and are not required to act concurrently with other uniform or concentrated live loads.

Landing areas designed for a design basis helicopter with maximum take-off weight of 3,000-pounds (13.35 kN) shall be identified with a 3,000 pound (13.34 kN) weight limitation. The landing area weight limitation shall be indicated by the numeral "3" (kips) located in the bottom right corner of the landing area as viewed from the primary approach path. The indication for the landing area weight limitation shall be a minimum 5 feet (1524 mm) in height.

1607.7 Heavy vehicle loads. Floors and other surfaces that are intended to support vehicle loads greater than a 10,000-pound (4536 kg) gross vehicle weight rating shall comply with Sections 1607.7.1 through 1607.7.5.

1607.7.1 Loads. Where any structure does not restrict access for vehicles that exceed a 10,000-pound (4536 kg) gross vehicle weight rating, those portions of the structure subject to such loads shall be designed using the vehicular live loads, including consideration of impact and fatigue, in accordance with the codes and specifications required by the jurisdiction having authority for the design and construction of the roadways and bridges in the same location of the structure.

1607.7.2 Fire truck and emergency vehicles. Where a structure or portions of a structure are accessed and loaded by fire department access vehicles and other similar emergency vehicles, the structure shall be designed for the greater of the following loads:

1. The actual operational loads, including outrigger reactions and contact areas of the vehicles as stipulated and approved by the building official; or
2. The live loading specified in Section 1607.7.1.

1607.7.3 Heavy vehicle garages. Garages designed to accommodate vehicles that exceed a 10,000-pound (4536 kg) gross vehicle weight rating, shall be designed using the live loading specified by Section 1607.7.1. For garages the design for impact and fatigue is not required.

Exception: The vehicular live loads and load placement are allowed to be determined using the actual vehicle weights for the vehicles allowed onto the garage floors, provided such loads and placement are based on rational engineering principles and are approved by the building official, but shall not be less than 50 psf (2.9 kN/m^2). This live load shall not be reduced.

1607.7.4 Forklifts and movable equipment. Where a structure is intended to have forklifts or other movable equipment present, the structure shall be designed for the total vehicle or equipment load and the individual wheel loads for the anticipated vehicles as specified by the owner of the facility. These loads shall be posted in accordance with Section 1607.7.5.

1607.7.4.1 Impact and fatigue. Impact loads and fatigue loading shall be considered in the design of the supporting structure. For the purposes of design, the vehicle and wheel loads shall be increased by 30 percent to account for impact.

1607.7.5 Posting. The maximum weight of vehicles allowed into or on a garage or other structure shall be posted by the owner or the owner's authorized agent in accordance with Section 106.1.

1607.8 Loads on handrails, guards, grab bars, seats and vehicle barriers. Handrails, *guards*, grab bars, accessible seats, accessible benches and vehicle barriers shall be designed and constructed for the structural loading conditions set forth in this section.

1607.8.1 Handrails and guards. Handrails and *guards* shall be designed to resist a linear load of 50 pounds per linear foot (plf) (0.73 kN/m) in accordance with Section 4.5.1 of ASCE 7. Glass handrail assemblies and *guards* shall also comply with Section 2407.

Exceptions:

1. For one- and two-family dwellings, only the single concentrated load required by Section 1607.8.1.1 shall be applied.
2. In Group I-3, F, H and S occupancies, for areas that are not accessible to the general public and that have an *occupant load* less than 50, the minimum load shall be 20 pounds per foot (0.29 kN/m).

1607.8.1.1 Concentrated load. Handrails and guards shall be designed to resist a concentrated load of 200 pounds (0.89 kN) in accordance with Section 4.5.1 of ASCE 7.

1607.8.1.2 Intermediate rails. Intermediate rails (all those except the handrail), balusters and panel fillers shall be designed to resist a concentrated load of 50 pounds (0.22 kN) in accordance with Section 4.5.1 of ASCE 7.

1607.8.2 Grab bars, shower seats and dressing room bench seats. Grab bars, shower seats and dressing room bench seats shall be designed to resist a single concentrated load of 250 pounds (1.11 kN) applied in any direction at any point on the grab bar or seat so as to produce the maximum load effects.

1607.8.3 Vehicle barriers. Vehicle barriers for passenger vehicles shall be designed to resist a concentrated load of 6,000 pounds (26.70 kN) in accordance with Section 4.5.3 of ASCE 7. Garages accommodating trucks and buses shall be designed in accordance with an *approved* method that contains provisions for traffic railings.

1607.9 Impact loads. The live loads specified in Sections 1607.3 through 1607.8 shall be assumed to include adequate allowance for ordinary impact conditions. Provisions shall be made in the structural design for uses and loads that involve unusual vibration and impact forces.

1607.9.1 Elevators. Members, elements and components subject to dynamic loads from elevators shall be designed for impact loads and deflection limits prescribed by ASME A17.1.

1607.9.2 Machinery. For the purpose of design, the weight of machinery and moving loads shall be increased as follows to allow for impact: (1) light machinery, shaft- or motor-driven, 20 percent; and (2) reciprocating machin-

ery or power-driven units, 50 percent. Percentages shall be increased where specified by the manufacturer.

1607.9.3 Elements supporting hoists for façade access equipment. In addition to any other applicable live loads, structural elements that support hoists for façade access equipment shall be designed for a live load consisting of the larger of the rated load of the hoist times 2.5 and the stall load of the hoist.

1607.9.4 Lifeline anchorages for façade access equipment. In addition to any other applicable live loads, lifeline anchorages and structural elements that support lifeline anchorages shall be designed for a live load of at least 3,100 pounds (13.8 kN) for each attached lifeline, in every direction that a fall arrest load may be applied.

1607.10 Reduction in uniform live loads. Except for uniform live loads at roofs, all other minimum uniformly distributed live loads, L_o, in Table 1607.1 are permitted to be reduced in accordance with Section 1607.10.1 or 1607.10.2. Uniform live loads at roofs are permitted to be reduced in accordance with Section 1607.12.2.

1607.10.1 Basic uniform live load reduction. Subject to the limitations of Sections 1607.10.1.1 through 1607.10.1.3 and Table 1607.1, members for which a value of $K_{LL}A_T$ is 400 square feet (37.16 m^2) or more are permitted to be designed for a reduced uniformly distributed live load, L, in accordance with the following equation:

$$L = L_o\left(0.25 + \frac{15}{\sqrt{K_{LL}A_T}}\right) \qquad \textbf{(Equation 16-23)}$$

$$\text{For SI: } L = L_o\left(0.25 + \frac{4.57}{\sqrt{K_{LL}A_T}}\right)$$

where:

L = Reduced design live load per square foot (m^2) of area supported by the member.

L_o = Unreduced design live load per square foot (m^2) of area supported by the member (see Table 1607.1).

K_{LL} = Live load element factor (see Table 1607.10.1).

A_T = Tributary area, in square feet (m^2).

L shall be not less than $0.50L_o$ for members supporting one floor and L shall be not less than $0.40L_o$ for members supporting two or more floors.

1607.10.1.1 One-way slabs. The tributary area, AT, for use in Equation 16-23 for one-way slabs shall not exceed an area defined by the slab span times a width normal to the span of 1.5 times the slab span.

1607.10.1.2 Heavy live loads. Live loads that exceed 100 psf (4.79 kN/m^2) shall not be reduced.

Exceptions:

1. The live loads for members supporting two or more floors are permitted to be reduced by a maximum of 20 percent, but the live load shall be not less than L as calculated in Section 1607.10.1.

TABLE 1607.10.1
LIVE LOAD ELEMENT FACTOR, K_{LL}

ELEMENT	K_{LL}
Interior columns	4
Exterior columns without cantilever slabs	4
Edge columns with cantilever slabs	3
Corner columns with cantilever slabs	2
Edge beams without cantilever slabs	2
Interior beams	2
All other members not identified above including: Edge beams with cantilever slabs Cantilever beams One-way slabs Two-way slabs Members without provisions for continuous shear transfer normal to their span	1

2. For uses other than storage, where *approved*, additional live load reductions shall be permitted where shown by the *registered design professional* that a rational approach has been used and that such reductions are warranted.

1607.10.1.3 Passenger vehicle garages. The live loads shall not be reduced in passenger vehicle garages.

Exception: The live loads for members supporting two or more floors are permitted to be reduced by a maximum of 20 percent, but the live load shall not be less than L as calculated in Section 1607.10.1.

1607.10.2 Alternative uniform live load reduction. As an alternative to Section 1607.10.1 and subject to the limitations of Table 1607.1, uniformly distributed live loads are permitted to be reduced in accordance with the following provisions. Such reductions shall apply to slab systems, beams, girders, columns, piers, walls and foundations.

1. A reduction shall not be permitted where the live load exceeds 100 psf (4.79 kN/m^2) except that the design live load for members supporting two or more floors is permitted to be reduced by a maximum of 20 percent.

   Exception: For uses other than storage, where approved, additional live load reductions shall be permitted where shown by the *registered design professional* that a rational approach has been used and that such reductions are warranted.

2. A reduction shall not be permitted in passenger vehicle parking garages except that the live loads for members supporting two or more floors are permitted to be reduced by a maximum of 20 percent.

3. For live loads not exceeding 100 psf (4.79 kN/m^2), the design live load for any structural member supporting 150 square feet (13.94 m^2) or more is permitted to be reduced in accordance with Equation 16-24.

4. For one-way slabs, the area, A, for use in Equation 16-24 shall not exceed the product of the slab span

and a width normal to the span of 0.5 times the slab span.

$R = 0.08(A - 150)$ **(Equation 16-24)**

For SI: $R = 0.861(A - 13.94)$

Such reduction shall not exceed the smallest of:

1. 40 percent for members supporting one floor.
2. 60 percent for members supporting two or more floors.
3. R as determined by the following equation:

$R = 23.1(1 + D/L_o)$ **(Equation 16-25)**

where:

A = Area of floor supported by the member, square feet (m^2).

D = Dead load per square foot (m^2) of area supported.

L_o = Unreduced live load per square foot (m^2) of area supported.

R = Reduction in percent.

1607.11 Distribution of floor loads. Where uniform floor live loads are involved in the design of structural members arranged so as to create continuity, the minimum applied loads shall be the full dead loads on all spans in combination with the floor live loads on spans selected to produce the greatest *load effect* at each location under consideration. Floor live loads are permitted to be reduced in accordance with Section 1607.10.

1607.12 Roof loads. The structural supports of roofs and marquees shall be designed to resist wind and, where applicable, snow and earthquake loads, in addition to the dead load of construction and the appropriate live loads as prescribed in this section, or as set forth in Table 1607.1. The live loads acting on a sloping surface shall be assumed to act vertically on the horizontal projection of that surface.

1607.12.1 Distribution of roof loads. Where uniform roof live loads are reduced to less than 20 psf (0.96 kN/m^2) in accordance with Section 1607.12.2.1 and are applied to the design of structural members arranged so as to create continuity, the reduced roof live load shall be applied to adjacent spans or to alternate spans, whichever produces the most unfavorable *load effect*. See Section 1607.12.2 for reductions in minimum roof live loads and Section 7.5 of ASCE 7 for partial snow loading.

1607.12.2 General. The minimum uniformly distributed live loads of roofs and marquees, L_o, in Table 1607.1 are permitted to be reduced in accordance with Section 1607.12.2.1.

1607.12.2.1 Ordinary roofs, awnings and canopies. Ordinary flat, pitched and curved roofs, and awnings and canopies other than of fabric construction supported by a skeleton structure, are permitted to be designed for a reduced uniformly distributed roof live load, L_r, as specified in the following equations or other controlling combinations of loads as specified in Section 1605, whichever produces the greater *load effect*.

In structures such as greenhouses, where special scaffolding is used as a work surface for workers and materials during maintenance and repair operations, a lower roof load than specified in the following equations shall not be used unless *approved* by the *building official*. Such structures shall be designed for a minimum roof live load of 12 psf (0.58 kN/m^2).

$L_r = L_o R_1 R_2$ **(Equation 16-26)**

where: $12 \le L_r \le 20$

For SI: $L_r = L_o R_1 R_2$

where: $0.58 \le L_r \le 0.96$

L_o = Unreduced roof live load per square foot (m^2) of horizontal projection supported by the member (see Table 1607.1).

L_r = Reduced roof live load per square foot (m^2) of horizontal projection supported by the member.

The reduction factors R_1 and R_2 shall be determined as follows:

$R_1 = 1$ for $A_t \le 200$ square feet (18.58 m^2) **(Equation 16-27)**

$R_1 = 1.2 - 0.001A_t$ for 200 square feet $< A_t <$ 600 square feet **(Equation 16-28)**

For SI: $1.2 - 0.011A_t$ for 18.58 square meters $< A_t <$ 55.74 square meters

$R_1 = 0.6$ for $A_t \ge 600$ square feet (55.74 m^2) **(Equation 16-29)**

where:

A_t = Tributary area (span length multiplied by effective width) in square feet (m^2) supported by the member, and

$R_2 = 1$ for $F \le 4$ **(Equation 16-30)**

$R_2 = 1.2 - 0.05F$ for $4 < F < 12$ **(Equation 16-31)**

$R_2 = 0.6$ for $F \ge 12$ **(Equation 16-32)**

where:

F = For a sloped roof, the number of inches of rise per foot (for SI: $F = 0.12 \times$ slope, with slope expressed as a percentage), or for an arch or dome, the rise-to-span ratio multiplied by 32.

1607.12.3 Occupiable roofs. Areas of roofs that are occupiable, such as *vegetative roofs*, roof gardens or for assembly or other similar purposes, and marquees are permitted to have their uniformly distributed live loads reduced in accordance with Section 1607.10.

1607.12.3.1 Vegetative and landscaped roofs. The weight of all landscaping materials shall be considered as dead load and shall be computed on the basis of saturation of the soil as determined in accordance with ASTM E 2397. The uniform design live load in unoccupied landscaped areas on roofs shall be 20 psf (0.958 kN/m^2). The uniform design live load for occupied landscaped areas on roofs shall be determined in accordance with Table 1607.1.

1607.12.4 Awnings and canopies. Awnings and canopies shall be designed for uniform live loads as required in Table 1607.1 as well as for snow loads and wind loads as specified in Sections 1608 and 1609.

1607.12.5 Photovoltaic panel systems. Roof structures that provide support for *photovoltaic panel systems* shall be designed in accordance with Sections 1607.12.5.1 through 1607.12.5.4, as applicable.

1607.12.5.1 Roof live load. Roof surfaces to be covered by solar photovoltaic panels or modules shall be designed for the roof live load, L_r, assuming that the photovoltaic panels or modules are not present. The roof photovoltaic live load in areas covered by solar photovoltaic panels or modules shall be in addition to the panel loading unless the area covered by each solar photovoltaic panel or module is inaccessible. Areas where the clear space between the panels and the rooftop is not more than 24 inches (610 mm) shall be considered inaccessible. Roof surfaces not covered by photovoltaic panels shall be designed for the roof live load.

1607.12.5.2 Photovoltaic panels or modules. The structure of a roof that supports solar photovoltaic panels or modules shall be designed to accommodate the full solar photovoltaic panels or modules and ballast dead load, including concentrated loads from support frames in combination with the loads from Section 1607.12.5.1 and other applicable loads. Where applicable, snow drift loads created by the photovoltaic panels or modules shall be included.

1607.12.5.3 Photovoltaic panels or modules installed as an independent structure. Solar photovoltaic panels or modules that are independent structures and do not have accessible/occupied space underneath are not required to accommodate a roof photovoltaic live load, provided the area under the structure is restricted to keep the public away. All other loads and combinations in accordance with Section 1605 shall be accommodated.

Solar photovoltaic panels or modules that are designed to be the roof, span to structural supports and have accessible/occupied space underneath shall have the panels or modules and all supporting structures designed to support a roof photovoltaic live load, as defined in Section 1607.12.5.1 in combination with other applicable loads. Solar photovoltaic panels or modules in this application are not permitted to be classified as "not accessible" in accordance with Section 1607.12.5.1.

1607.12.5.4 Ballasted photovoltaic panel systems. Roof structures that provide support for ballasted *photovoltaic panel systems* shall be designed, or analyzed, in accordance with Section 1604.4; checked in accordance with Section 1604.3.6 for deflections; and checked in accordance with Section 1611 for ponding.

1607.13 Crane loads. The crane live load shall be the rated capacity of the crane. Design loads for the runway beams, including connections and support brackets, of moving bridge cranes and monorail cranes shall include the maximum wheel loads of the crane and the vertical impact, lateral and longitudinal forces induced by the moving crane.

1607.13.1 Maximum wheel load. The maximum wheel loads shall be the wheel loads produced by the weight of the bridge, as applicable, plus the sum of the rated capacity and the weight of the trolley with the trolley positioned on its runway at the location where the resulting load effect is maximum.

1607.13.2 Vertical impact force. The maximum wheel loads of the crane shall be increased by the percentages shown below to determine the induced vertical impact or vibration force:

Monorail cranes (powered) ..... 25 percent

Cab-operated or remotely operated bridge cranes (powered) ..... 25 percent

Pendant-operated bridge cranes (powered) ..... 10 percent

Bridge cranes or monorail cranes with hand-geared bridge, trolley and hoist ..... 0 percent

1607.13.3 Lateral force. The lateral force on crane runway beams with electrically powered trolleys shall be calculated as 20 percent of the sum of the rated capacity of the crane and the weight of the hoist and trolley. The lateral force shall be assumed to act horizontally at the traction surface of a runway beam, in either direction perpendicular to the beam, and shall be distributed with due regard to the lateral stiffness of the runway beam and supporting structure.

1607.13.4 Longitudinal force. The longitudinal force on crane runway beams, except for bridge cranes with hand-geared bridges, shall be calculated as 10 percent of the maximum wheel loads of the crane. The longitudinal force shall be assumed to act horizontally at the traction surface of a runway beam, in either direction parallel to the beam.

1607.14 Interior walls and partitions. Interior walls and partitions that exceed 6 feet (1829 mm) in height, including their finish materials, shall have adequate strength and stiffness to resist the loads to which they are subjected but not less than a horizontal load of 5 psf (0.240 kN/m^2).

1607.14.1 Fabric partitions. Fabric partitions that exceed 6 feet (1829 mm) in height, including their finish materials, shall have adequate strength and stiffness to resist the following load conditions:

1. The horizontal distributed load need only be applied to the partition framing. The total area used to determine the distributed load shall be the area of the fabric face between the framing members to which the fabric is attached. The total distributed load shall be uniformly applied to such framing members in proportion to the length of each member.
2. A concentrated load of 40 pounds (0.176 kN) applied to an 8-inch-diameter (203 mm) area [50.3 square inches (32 452 mm^2)] of the fabric face at a height of 54 inches (1372 mm) above the floor.

SECTION 1608
SNOW LOADS

1608.1 General. Design snow loads shall be determined in accordance with Chapter 7 of ASCE 7, but the design roof load shall not be less than that determined by Section 1607.

1608.2 Ground snow loads. The ground snow loads to be used in determining the design snow loads for roofs shall be determined in accordance with ASCE 7 or Figure 1608.2 for the contiguous United States and Table 1608.2 for Alaska. Site-specific case studies shall be made in areas designated "CS" in Figure 1608.2. Ground snow loads for sites at elevations above the limits indicated in Figure 1608.2 and for all sites within the CS areas shall be *approved*. Ground snow load determination for such sites shall be based on an extreme value statistical analysis of data available in the vicinity of the site using a value with a 2-percent annual probability of being exceeded (50-year mean recurrence interval). Snow loads are zero for Hawaii, except in mountainous regions as *approved* by the *building official*.

1608.3 Ponding instability. Susceptible bays of roofs shall be evaluated for ponding instability in accordance with Section 7.11 of ASCE 7.

SECTION 1609
WIND LOADS

1609.1 Applications. Buildings, structures and parts thereof shall be designed to withstand the minimum wind loads prescribed herein. Decreases in wind loads shall not be made for the effect of shielding by other structures.

1609.1.1 Determination of wind loads. Wind loads on every building or structure shall be determined in accordance with Chapters 26 to 30 of ASCE 7 or provisions of the alternate all-heights method in Section 1609.6. The type of opening protection required, the ultimate design wind speed, V_{ult}, and the exposure category for a site is permitted to be determined in accordance with Section 1609 or ASCE 7. Wind shall be assumed to come from any horizontal direction and wind pressures shall be assumed to act normal to the surface considered.

Exceptions:

1. Subject to the limitations of Section 1609.1.1.1, the provisions of ICC 600 shall be permitted for applicable Group R-2 and R-3 buildings.
2. Subject to the limitations of Section 1609.1.1.1, residential structures using the provisions of AWC WFCM.
3. Subject to the limitations of Section 1609.1.1.1, residential structures using the provisions of AISI S230.
4. Designs using NAAMM FP 1001.
5. Designs using TIA-222 for antenna-supporting structures and antennas, provided the horizontal extent of Topographic Category 2 escarpments in Section 2.6.6.2 of TIA-222 shall be 16 times the height of the escarpment.
6. Wind tunnel tests in accordance with ASCE 49 and Sections 31.4 and 31.5 of ASCE 7.

The wind speeds in Figures 1609.3(1), 1609.3(2) and 1609.3(3) are ultimate design wind speeds, V_{ult}, and shall be converted in accordance with Section 1609.3.1 to nominal design wind speeds, V_{asd}, when the provisions of the standards referenced in Exceptions 4 and 5 are used.

1609.1.1.1 Applicability. The provisions of ICC 600 are applicable only to buildings located within Exposure B or C as defined in Section 1609.4. The provisions of ICC 600, AWC WFCM and AISI S230 shall not apply to buildings sited on the upper half of an isolated hill, ridge or escarpment meeting the following conditions:

1. The hill, ridge or escarpment is 60 feet (18 288 mm) or higher if located in Exposure B or 30 feet (9144 mm) or higher if located in Exposure C;
2. The maximum average slope of the hill exceeds 10 percent; and

TABLE 1608.2
GROUND SNOW LOADS, p_g, FOR ALASKAN LOCATIONS

LOCATION	POUNDS PER SQUARE FOOT	LOCATION	POUNDS PER SQUARE FOOT	LOCATION	POUNDS PER SQUARE FOOT
Adak	30	Galena	60	Petersburg	150
Anchorage	50	Gulkana	70	St. Paul Islands	40
Angoon	70	Homer	40	Seward	50
Barrow	25	Juneau	60	Shemya	25
Barter Island	35	Kenai	70	Sitka	50
Bethel	40	Kodiak	30	Talkeetna	120
Big Delta	50	Kotzebue	60	Unalakleet	50
Cold Bay	25	McGrath	70	Valdez	160
Cordova	100	Nenana	80	Whittier	300
Fairbanks	60	Nome	70	Wrangell	60
Fort Yukon	60	Palmer	50	Yakutat	150

For SI: 1 pound per square foot = 0.0479 kN/m^2.

3. The hill, ridge or escarpment is unobstructed upwind by other such topographic features for a distance from the high point of 50 times the height of the hill or 1 mile (1.61 km), whichever is greater.

1609.1.2 Protection of openings. In *wind-borne debris regions*, glazing in buildings shall be impact resistant or protected with an impact-resistant covering meeting the requirements of an *approved* impact-resistant standard or ASTM E 1996 and ASTM E 1886 referenced herein as follows:

1. Glazed openings located within 30 feet (9144 mm) of grade shall meet the requirements of the large missile test of ASTM E 1996.
2. Glazed openings located more than 30 feet (9144 mm) above grade shall meet the provisions of the small missile test of ASTM E 1996.

Exceptions:

1. Wood structural panels with a minimum thickness of $^7/_{16}$ inch (11.1 mm) and maximum panel span of 8 feet (2438 mm) shall be permitted for opening protection in buildings with a mean roof height of 33 feet (10 058 mm) or less that are classified as a Group R-3 or R-4 occupancy. Panels shall be precut so that they shall be attached to the framing surrounding the opening containing the product with the glazed opening. Panels shall be predrilled as required for the anchorage method and shall be secured with the attachment hardware provided. Attachments shall be designed to resist the components and cladding loads determined in accordance with the provisions of ASCE 7, with corrosion-resistant attachment hardware provided and anchors permanently installed on the building. Attachment in accordance with Table 1609.1.2 with corrosion-resistant attachment hardware provided and anchors permanently installed on the building is permitted for buildings with a mean roof height of 45 feet (13 716 mm) or less where V_{asd} determined in accordance with Section 1609.3.1 does not exceed 140 mph (63 m/s).
2. Glazing in *Risk Category* I buildings, including greenhouses that are occupied for growing plants on a production or research basis, without public access shall be permitted to be unprotected.
3. Glazing in *Risk Category* II, III or IV buildings located over 60 feet (18 288 mm) above the ground and over 30 feet (9144 mm) above aggregate surface roofs located within 1,500 feet (458 m) of the building shall be permitted to be unprotected.

1609.1.2.1 Louvers. Louvers protecting intake and exhaust ventilation ducts not assumed to be open that are located within 30 feet (9144 mm) of grade shall meet the requirements of AMCA 54.

1609.1.2.2. Application of ASTM E 1996. The text of Section 6.2.2 of ASTM E 1996 shall be substituted as follows:

6.2.2 Unless otherwise specified, select the wind zone based on the strength design wind speed, V_{ult}, as follows:

6.2.2.1 *Wind Zone 1*—130 mph ≤ ultimate design wind speed, V_{ult} < 140 mph.

6.2.2.2 *Wind Zone 2*—140 mph ≤ ultimate design wind speed, V_{ult} < 150 mph at greater than one mile (1.6 km) from the coastline. The coastline shall be measured from the mean high water mark.

6.2.2.3 *Wind Zone 3*—150 mph (58 m/s) ≤ ultimate design wind speed, V_{ult} ≤ 160 mph (63 m/s), or 140 mph (54 m/s) ≤ ultimate design wind speed, V_{ult} ≤ 160 mph (63 m/s) and within one mile (1.6 km) of the coastline. The coastline shall be measured from the mean high water mark.

6.2.2.4 *Wind Zone 4*— ultimate design wind speed, V_{ult} >160 mph (63 m/s).

1609.1.2.3 Garage doors. Garage door glazed opening protection for wind-borne debris shall meet the requirements of an *approved* impact-resisting standard or ANSI/DASMA 115.

TABLE 1609.1.2
WIND-BORNE DEBRIS PROTECTION FASTENING SCHEDULE FOR WOOD STRUCTURAL PANELS[a, b, c, d]

FASTENER TYPE	FASTENER SPACING (Inches)		
	Panel Span ≤ 4 feet	4 feet < Panel Span ≤ 6 feet	6 feet < Panel Span ≤ 8 feet
No. 8 wood-screw-based anchor with 2-inch embedment length	16	10	8
No. 10 wood-screw-based anchor with 2-inch embedment length	16	12	9
$^1/_4$-inch diameter lag-screw-based anchor with 2-inch embedment length	16	16	16

For SI: 1 inch = 25.4 mm, 1 foot = 304.8 mm, 1 pound = 4.448 N, 1 mile per hour = 0.447 m/s.

a. This table is based on 140 mph wind speeds and a 45-foot mean roof height.
b. Fasteners shall be installed at opposing ends of the wood structural panel. Fasteners shall be located a minimum of 1 inch from the edge of the panel.
c. Anchors shall penetrate through the exterior wall covering with an embedment length of 2 inches minimum into the building frame. Fasteners shall be located a minimum of $2^1/_2$ inches from the edge of concrete block or concrete.
d. Where panels are attached to masonry or masonry/stucco, they shall be attached using vibration-resistant anchors having a minimum ultimate withdrawal capacity of 1,500 pounds.

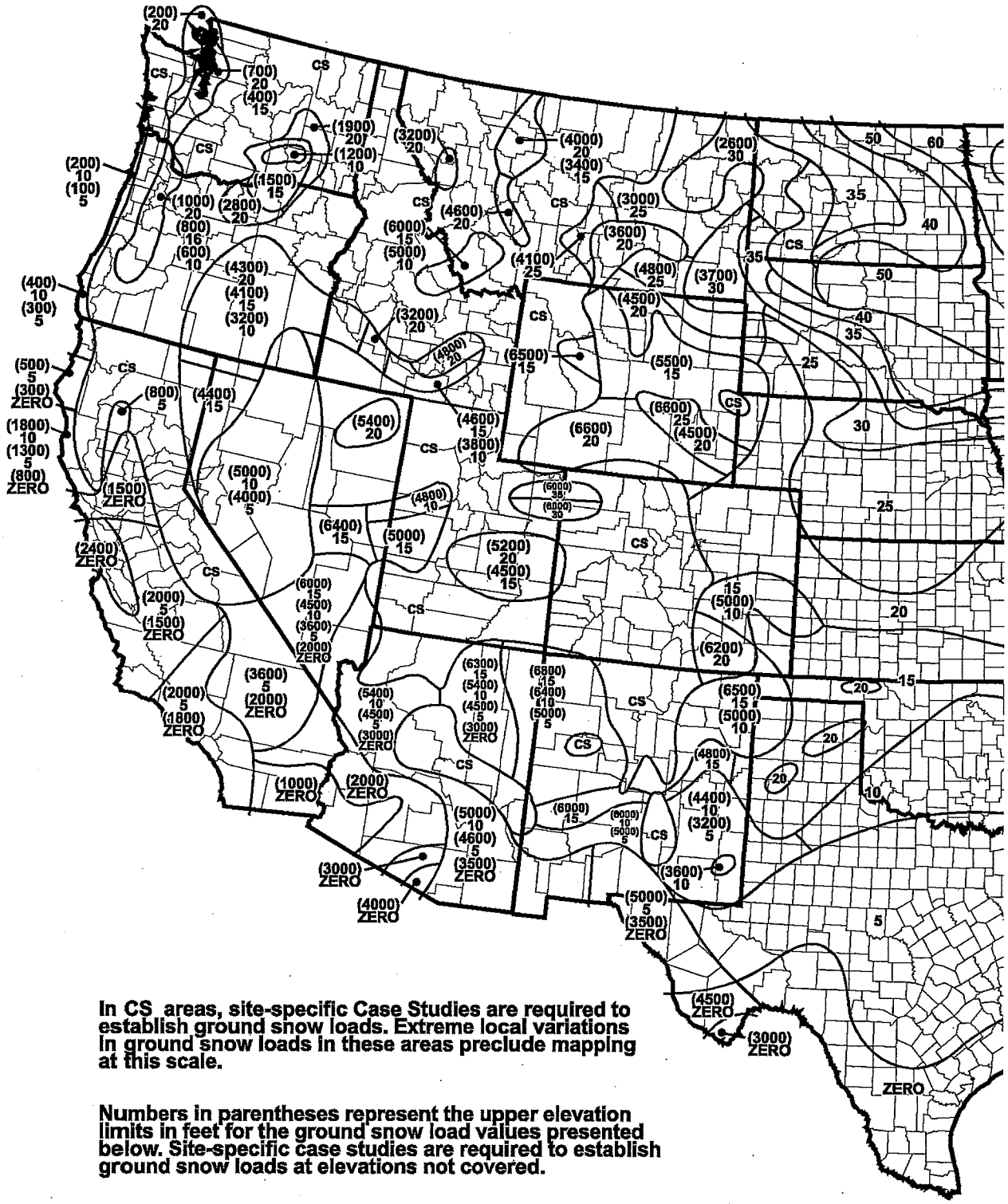

In CS areas, site-specific Case Studies are required to establish ground snow loads. Extreme local variations in ground snow loads in these areas preclude mapping at this scale.

Numbers in parentheses represent the upper elevation limits in feet for the ground snow load values presented below. Site-specific case studies are required to establish ground snow loads at elevations not covered.

To convert lb/sq ft to kNm^2, multiply by 0.0479.

To convert feet to meters, multiply by 0.3048.

FIGURE 1608.2
GROUND SNOW LOADS, p_g, FOR THE UNITED STATES (psf)

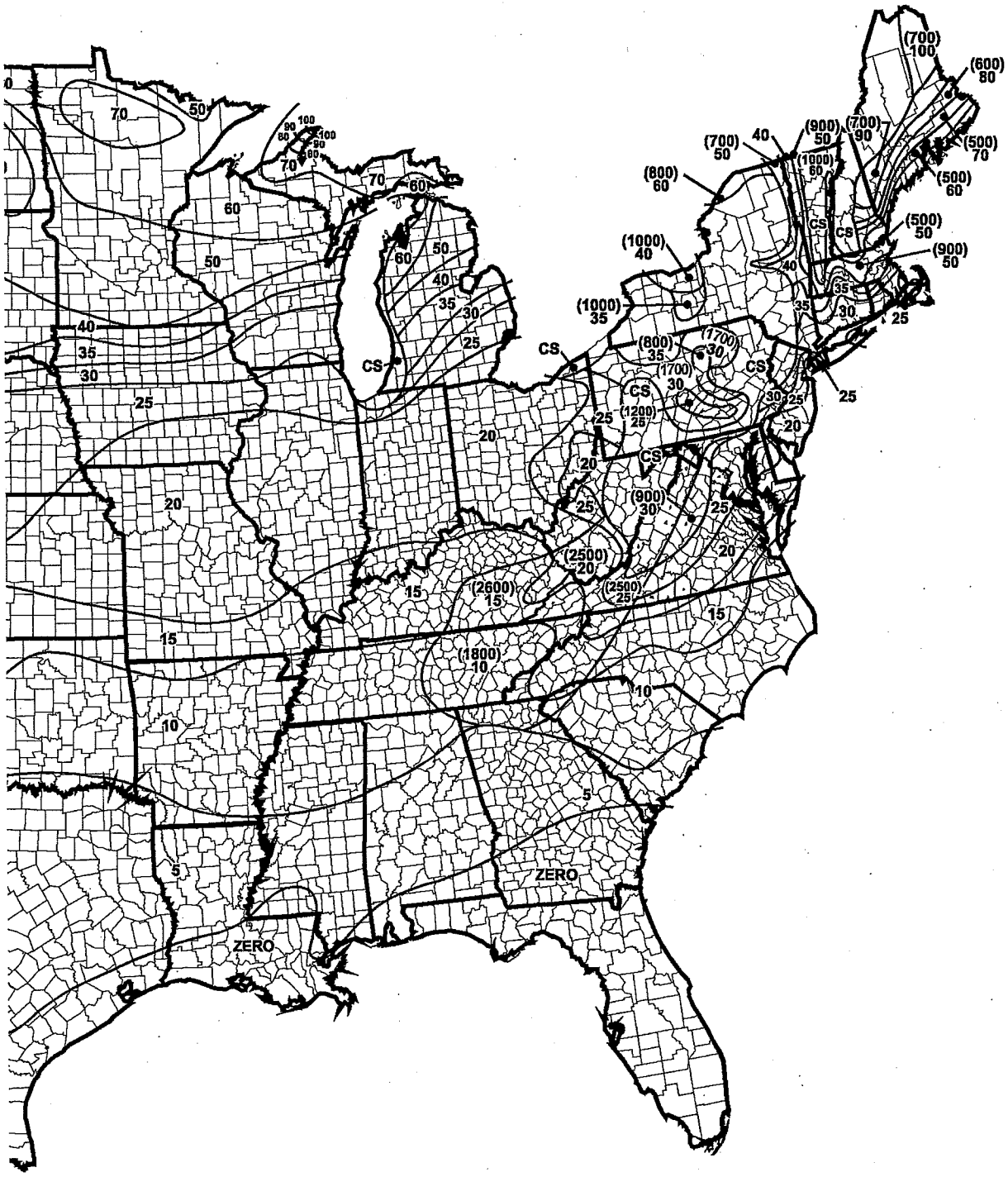

FIGURE 1608.2—continued
GROUND SNOW LOADS, p_g, FOR THE UNITED STATES (psf)

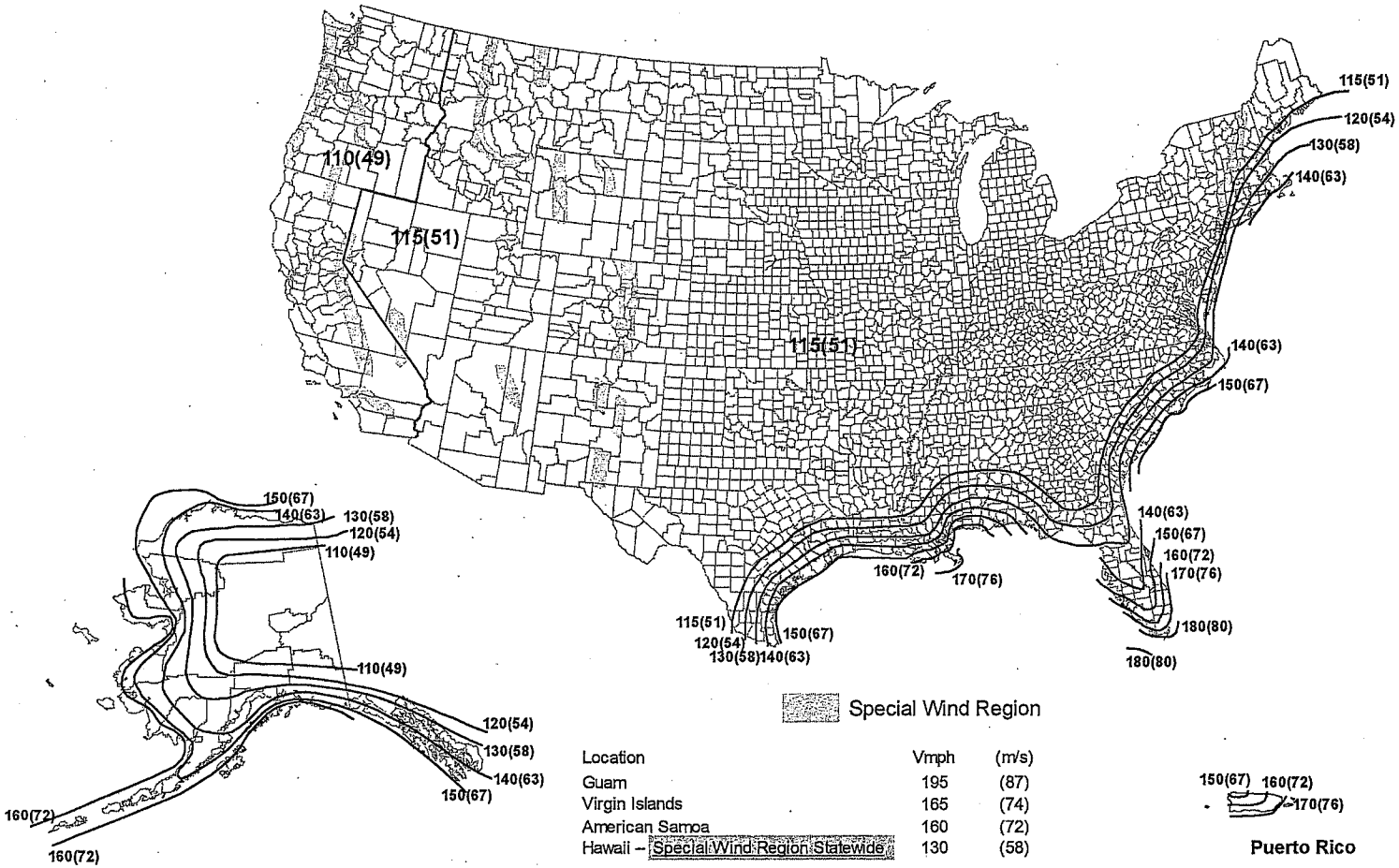

Location	Vmph	(m/s)
Guam	195	(87)
Virgin Islands	165	(74)
American Samoa	160	(72)
Hawaii – Special Wind Region Statewide	130	(58)

Notes:

1. Values are nominal design 3-second gust wind speeds in miles per hour (m/s) at 33 ft (10m) above ground for Exposure C category.
2. Linear interpolation between contours is permitted.
3. Islands and coastal areas outside the last contour shall use the last wind speed contour of the coastal area.
4. Mountainous terrain, gorges, ocean promontories, and special wind regions shall be examined for unusual wind conditions.
5. Wind speeds correspond to approximately a 7% probability of exceedance in 50 years (Annual Exceedance Probability = 0.00143, MRI = 700 Years).

FIGURE 1609.3(1)
ULTIMATE DESIGN WIND SPEEDS, V_{ult}, FOR RISK CATEGORY II BUILDINGS AND OTHER STRUCTURES

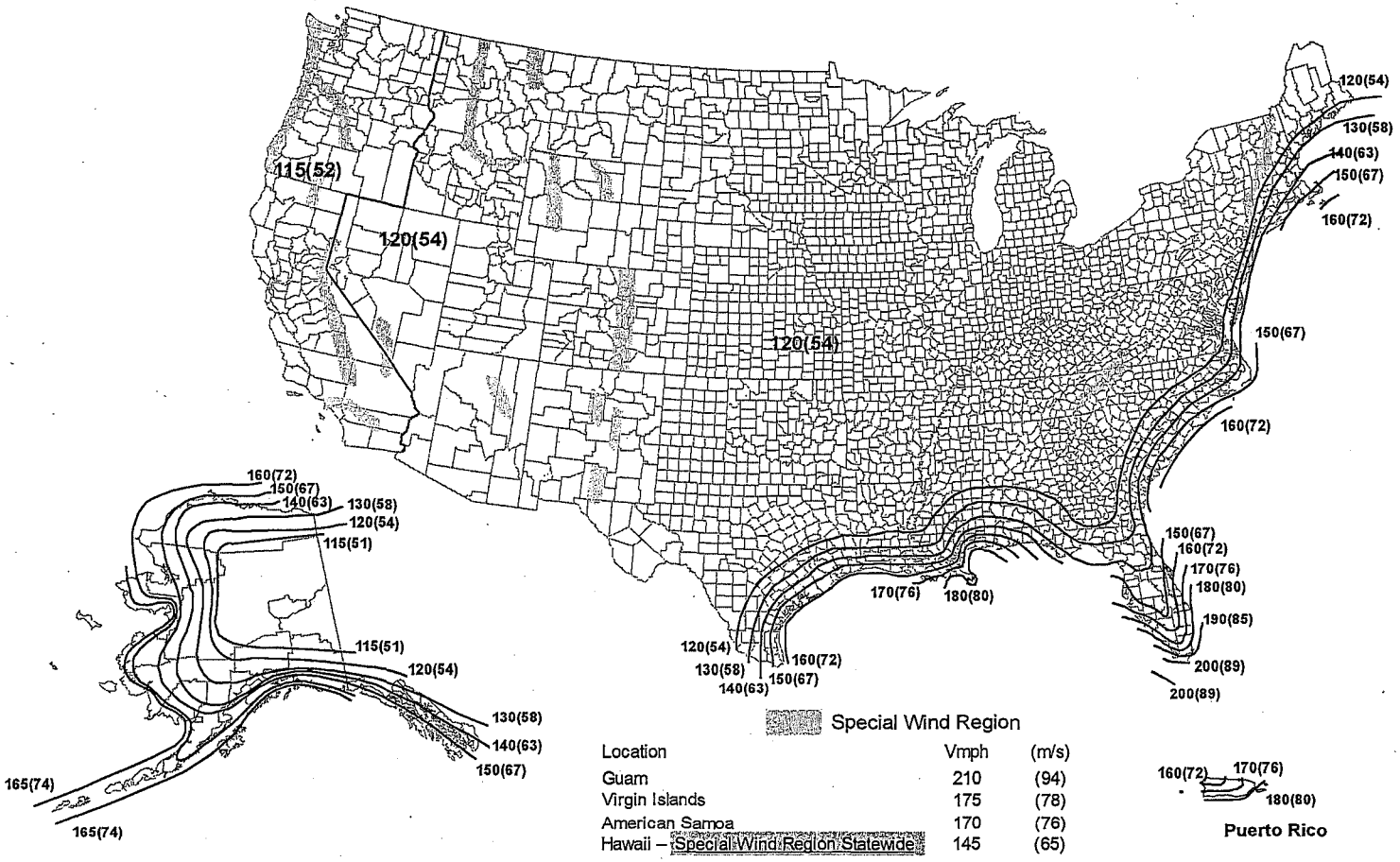

Location	Vmph	(m/s)
Guam	210	(94)
Virgin Islands	175	(78)
American Samoa	170	(76)
Hawaii – Special Wind Region Statewide	145	(65)

Notes:

1. Values are nominal design 3-second gust wind speeds in miles per hour (m/s) at 33 ft (10m) above ground for Exposure C category.
2. Linear interpolation between contours is permitted.
3. Islands and coastal areas outside the last contour shall use the last wind speed contour of the coastal area.
4. Mountainous terrain, gorges, ocean promontories, and special wind regions shall be examined for unusual wind conditions.
5. Wind speeds correspond to approximately a 3% probability of exceedance in 50 years (Annual Exceedance Probability = 0.000588, MRI = 1700 Years).

FIGURE 1609.3(2)
ULTIMATE DESIGN WIND SPEEDS, v_{ult}, FOR RISK CATEGORY III AND IV BUILDINGS AND OTHER STRUCTURES

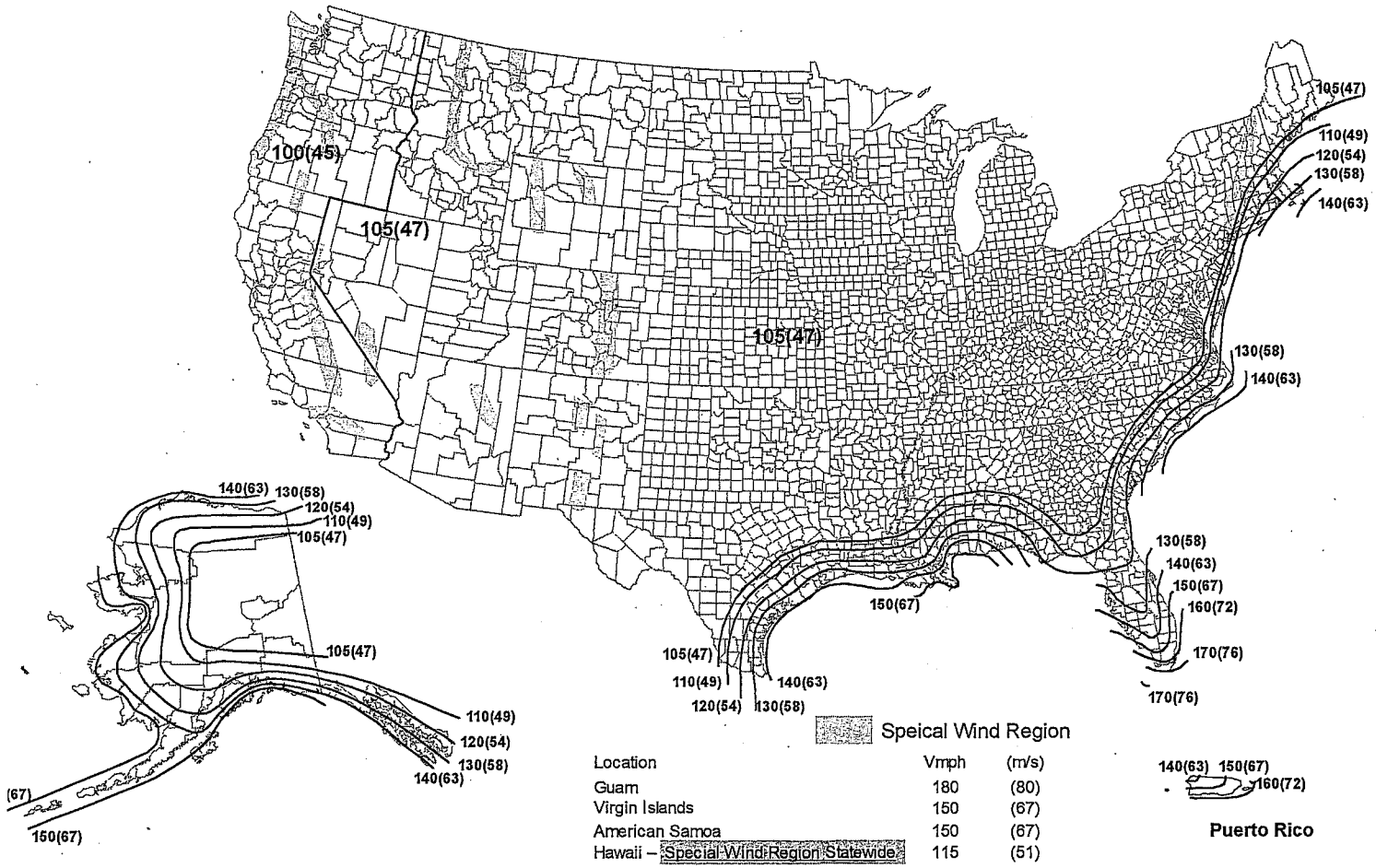

Location	Vmph	(m/s)
Guam	180	(80)
Virgin Islands	150	(67)
American Samoa	150	(67)
Hawaii – Special Wind Region Statewide	115	(51)

Notes:

1. Values are nominal design 3-second gust wind speeds in miles per hour (m/s) at 33 ft (10m) above ground for Exposure C category.
2. Linear interpolation between contours is permitted.
3. Islands and coastal areas outside the last contour shall use the last wind speed contour of the coastal area.
4. Mountainous terrain, gorges, ocean promontories, and special wind regions shall be examined for unusual wind conditions.
5. Wind speeds correspond to approximately a 15% probability of exceedance in 50 years (Annual Exceedance Probability = 0.00333, MRI = 300 Years).

FIGURE 1609.3(3)
ULTIMATE DESIGN WIND SPEEDS, V_{ult}, FOR RISK CATEGORY I BUILDINGS AND OTHER STRUCTURES

1609.2 Definitions. For the purposes of Section 1609 and as used elsewhere in this code, the following terms are defined in Chapter 2.

HURRICANE-PRONE REGIONS.

WIND-BORNE DEBRIS REGION.

WIND SPEED, V_{ult}.

WIND SPEED, V_{asd}.

1609.3 Ultimate design wind speed. The ultimate design wind speed, V_{ult}, in mph, for the determination of the wind loads shall be determined by Figures 1609.3(1), 1609.3(2) and 1609.3(3). The ultimate design wind speed, V_{ult}, for use in the design of Risk Category II buildings and structures shall be obtained from Figure 1609.3(1). The ultimate design wind speed, V_{ult}, for use in the design of Risk Category III and IV buildings and structures shall be obtained from Figure 1609.3(2). The ultimate design wind speed, V_{ult}, for use in the design of Risk Category I buildings and structures shall be obtained from Figure 1609.3(3). The ultimate design wind speed, V_{ult}, for the special wind regions indicated near mountainous terrain and near gorges shall be in accordance with local jurisdiction requirements. The ultimate design wind speeds, V_{ult}, determined by the local jurisdiction shall be in accordance with Section 26.5.1 of ASCE 7.

In nonhurricane-prone regions, when the ultimate design wind speed, V_{ult}, is estimated from regional climatic data, the ultimate design wind speed, V_{ult}, shall be determined in accordance with Section 26.5.3 of ASCE 7.

1609.3.1 Wind speed conversion. When required, the ultimate design wind speeds of Figures 1609.3(1), 1609.3(2) and 1609.3(3) shall be converted to nominal design wind speeds, V_{asd}, using Table 1609.3.1 or Equation 16-33.

$$V_{asd} = V_{ult}\sqrt{0.6} \qquad \textbf{(Equation 16-33)}$$

where:

V_{asd} = Nominal design wind speed applicable to methods specified in Exceptions 4 and 5 of Section 1609.1.1.

V_{ult} = Ultimate design wind speeds determined from Figures 1609.3(1), 1609.3(2) or 1609.3(3).

1609.4 Exposure category. For each wind direction considered, an exposure category that adequately reflects the characteristics of ground surface irregularities shall be determined for the site at which the building or structure is to be constructed. Account shall be taken of variations in ground surface roughness that arise from natural topography and vegetation as well as from constructed features.

1609.4.1 Wind directions and sectors. For each selected wind direction at which the wind loads are to be evaluated, the exposure of the building or structure shall be determined for the two upwind sectors extending 45 degrees (0.79 rad) either side of the selected wind direction. The exposures in these two sectors shall be determined in accordance with Sections 1609.4.2 and 1609.4.3 and the exposure resulting in the highest wind loads shall be used to represent winds from that direction.

1609.4.2 Surface roughness categories. A ground surface roughness within each 45-degree (0.79 rad) sector shall be determined for a distance upwind of the site as defined in Section 1609.4.3 from the categories defined below, for the purpose of assigning an exposure category as defined in Section 1609.4.3.

Surface Roughness B. Urban and suburban areas, wooded areas or other terrain with numerous closely spaced obstructions having the size of single-family dwellings or larger.

Surface Roughness C. Open terrain with scattered obstructions having heights generally less than 30 feet (9144 mm). This category includes flat open country, and grasslands.

Surface Roughness D. Flat, unobstructed areas and water surfaces. This category includes smooth mud flats, salt flats and unbroken ice.

1609.4.3 Exposure categories. An exposure category shall be determined in accordance with the following:

Exposure B. For buildings with a mean roof height of less than or equal to 30 feet (9144 mm), Exposure B shall apply where the ground surface roughness, as defined by Surface Roughness B, prevails in the upwind direction for a distance of at least 1,500 feet (457 m). For buildings with a mean roof height greater than 30 feet (9144 mm), Exposure B shall apply where Surface Roughness B prevails in the upwind direction for a distance of at least 2,600 feet (792 m) or 20 times the height of the building, whichever is greater.

Exposure C. Exposure C shall apply for all cases where Exposure B or D does not apply.

Exposure D. Exposure D shall apply where the ground surface roughness, as defined by Surface Roughness D, prevails in the upwind direction for a distance of at least 5,000 feet (1524 m) or 20 times the height of the building, whichever is greater. Exposure D shall also apply where the ground surface roughness immediately upwind of the site is B or C, and the site is within a distance of 600 feet (183 m) or 20 times the building

TABLE 1609.3.1
WIND SPEED CONVERSIONS[a, b, c]

V_{ult}	100	110	120	130	140	150	160	170	180	190	200
V_{asd}	78	85	93	101	108	116	124	132	139	147	155

For SI: 1 mile per hour = 0.44 m/s.

a. Linear interpolation is permitted.

b. V_{asd} = nominal design wind speed applicable to methods specified in Exceptions 1 through 5 of Section 1609.1.1.

c. V_{ult} = ultimate design wind speeds determined from Figure 1609.3(1), 1609.3(2) or 1609.3(3).

height, whichever is greater, from an Exposure D condition as defined in the previous sentence.

1609.5 Roof systems. Roof systems shall be designed and constructed in accordance with Sections 1609.5.1 through 1609.5.3, as applicable.

1609.5.1 Roof deck. The roof deck shall be designed to withstand the wind pressures determined in accordance with ASCE 7.

1609.5.2 Roof coverings. Roof coverings shall comply with Section 1609.5.1.

Exception: Rigid tile roof coverings that are air permeable and installed over a roof deck complying with Section 1609.5.1 are permitted to be designed in accordance with Section 1609.5.3.

Asphalt shingles installed over a roof deck complying with Section 1609.5.1 shall comply with the wind-resistance requirements of Section 1504.1.1.

1609.5.3 Rigid tile. Wind loads on rigid tile roof coverings shall be determined in accordance with the following equation:

$$M_a = q_h C_L b L L_a [1.0 - GC_p] \qquad \textbf{(Equation 16-34)}$$

For SI:

$$M_a = \frac{q_h C_L b L L_a [1.0 - GC_p]}{1,000}$$

where:

b = Exposed width, feet (mm) of the roof tile.

C_L = Lift coefficient. The lift coefficient for concrete and clay tile shall be 0.2 or shall be determined by test in accordance with Section 1504.2.1.

GC_p = Roof pressure coefficient for each applicable roof zone determined from Chapter 30 of ASCE 7. Roof coefficients shall not be adjusted for internal pressure.

L = Length, feet (mm) of the roof tile.

L_a = Moment arm, feet (mm) from the axis of rotation to the point of uplift on the roof tile. The point of uplift shall be taken at $0.76L$ from the head of the tile and the middle of the exposed width. For roof tiles with nails or screws (with or without a tail clip), the axis of rotation shall be taken as the head of the tile for direct deck application or as the top edge of the batten for battened applications. For roof tiles fastened only by a nail or screw along the side of the tile, the axis of rotation shall be determined by testing. For roof tiles installed with battens and fastened only by a clip near the tail of the tile, the moment arm shall be determined about the top edge of the batten with consideration given for the point of rotation of the tiles based on straight bond or broken bond and the tile profile.

M_a = Aerodynamic uplift moment, feet-pounds (N-mm) acting to raise the tail of the tile.

q_h = Wind velocity pressure, psf (kN/m^2) determined from Section 27.3.2 of ASCE 7.

Concrete and clay roof tiles complying with the following limitations shall be designed to withstand the aerodynamic uplift moment as determined by this section.

1. The roof tiles shall be either loose laid on battens, mechanically fastened, mortar set or adhesive set.
2. The roof tiles shall be installed on solid sheathing that has been designed as components and cladding.
3. An underlayment shall be installed in accordance with Chapter 15.
4. The tile shall be single lapped interlocking with a minimum head lap of not less than 2 inches (51 mm).
5. The length of the tile shall be between 1.0 and 1.75 feet (305 mm and 533 mm).
6. The exposed width of the tile shall be between 0.67 and 1.25 feet (204 mm and 381 mm).
7. The maximum thickness of the tail of the tile shall not exceed 1.3 inches (33 mm).
8. Roof tiles using mortar set or adhesive set systems shall have at least two-thirds of the tile's area free of mortar or adhesive contact.

1609.6 Alternate all-heights method. The alternate wind design provisions in this section are simplifications of the ASCE 7 Directional Procedure.

1609.6.1 Scope. As an alternative to ASCE 7 Chapters 27 and 30, the following provisions are permitted to be used to determine the wind effects on regularly shaped buildings, or other structures that are regularly shaped, that meet all of the following conditions:

1. The building or other structure is less than or equal to 75 feet (22 860 mm) in height with a height-to-least-width ratio of 4 or less, or the building or other structure has a fundamental frequency greater than or equal to 1 hertz.
2. The building or other structure is not sensitive to dynamic effects.
3. The building or other structure is not located on a site for which channeling effects or buffeting in the wake of upwind obstructions warrant special consideration.
4. The building shall meet the requirements of a simple diaphragm building as defined in ASCE 7 Section 26.2, where wind loads are only transmitted to the main windforce-resisting system (MWFRS) at the diaphragms.
5. For open buildings, multispan gable roofs, stepped roofs, sawtooth roofs, domed roofs, roofs with slopes greater than 45 degrees (0.79 rad), solid free-standing walls and solid signs, and rooftop equipment, apply ASCE 7 provisions.

1609.6.1.1 Modifications. The following modifications shall be made to certain subsections in ASCE 7: in Section 1609.6.2, symbols and notations that are specific to this section are used in conjunction with the symbols and notations in ASCE 7 Section 26.3.

1609.6.2 Symbols and notations. Coefficients and variables used in the alternative all-heights method equations are as follows:

C_{net}= Net-pressure coefficient based on K_d [(G) (C_p) - (GC_{pi})], in accordance with Table 1609.6.2.

G = Gust effect factor for rigid structures in accordance with ASCE 7 Section 26.9.1.

K_d = Wind directionality factor in accordance with ASCE 7 Table 26-6.

P_{net}= Design wind pressure to be used in determination of wind loads on buildings or other structures or their components and cladding, in psf (kN/m^2).

1609.6.3 Design equations. When using the alternative all-heights method, the MWFRS, and components and cladding of every structure shall be designed to resist the effects of wind pressures on the building envelope in accordance with Equation 16-35.

$$P_{net} = 0.00256V^2K_zC_{net}K_{zt} \qquad \textbf{(Equation 16-35)}$$

Design wind forces for the MWFRS shall be not less than 16 psf (0.77 kN/m^2) multiplied by the area of the structure projected on a plane normal to the assumed wind direction (see ASCE 7 Section 27.4.7 for criteria). Design net wind pressure for components and cladding shall be not less than 16 psf (0.77 kN/m^2) acting in either direction normal to the surface.

1609.6.4 Design procedure. The MWFRS and the components and cladding of every building or other structure shall be designed for the pressures calculated using Equation 16-35.

1609.6.4.1 Main windforce-resisting systems. The MWFRS shall be investigated for the torsional effects identified in ASCE 7 Figure 27.4-8.

1609.6.4.2 Determination of K_z and K_{zt}. Velocity pressure exposure coefficient, K_z, shall be determined in accordance with ASCE 7 Section 27.3.1 and the topographic factor, K_{zt}, shall be determined in accordance with ASCE 7 Section 26.8.

1. For the windward side of a structure, K_{zt} and K_z shall be based on height z.
2. For leeward and sidewalls, and for windward and leeward roofs, K_{zt} and K_z shall be based on mean roof height h.

1609.6.4.3 Determination of net pressure coefficients, C_{net}. For the design of the MWFRS and for components and cladding, the sum of the internal and external net pressure shall be based on the net pressure coefficient, C_{net}.

1. The pressure coefficient, C_{net}, for walls and roofs shall be determined from Table 1609.6.2.
2. Where C_{net} has more than one value, the more severe wind load condition shall be used for design.

1609.6.4.4 Application of wind pressures. When using the alternative all-heights method, wind pressures shall be applied simultaneously on, and in a direction normal to, all building envelope wall and roof surfaces.

1609.6.4.4.1 Components and cladding. Wind pressure for each component or cladding element is applied as follows using C_{net} values based on the effective wind area, A, contained within the zones in areas of discontinuity of width and/or length "a," "2a" or "4a" at: corners of roofs and walls; edge strips for ridges, rakes and eaves; or field areas on walls or roofs as indicated in figures in tables in ASCE 7 as referenced in Table 1609.6.2 in accordance with the following:

1. Calculated pressures at local discontinuities acting over specific edge strips or corner boundary areas.
2. Include "field" (Zone 1, 2 or 4, as applicable) pressures applied to areas beyond the boundaries of the areas of discontinuity.
3. Where applicable, the calculated pressures at discontinuities (Zone 2 or 3) shall be combined with design pressures that apply specifically on rakes or eave overhangs.

SECTION 1610
SOIL LATERAL LOADS

1610.1 General. Foundation walls and retaining walls shall be designed to resist lateral soil loads. Soil loads specified in Table 1610.1 shall be used as the minimum design lateral soil loads unless determined otherwise by a geotechnical investigation in accordance with Section 1803. Foundation walls and other walls in which horizontal movement is restricted at the top shall be designed for at-rest pressure. Retaining walls free to move and rotate at the top shall be permitted to be designed for active pressure. Design lateral pressure from surcharge loads shall be added to the lateral earth pressure load. Design lateral pressure shall be increased if soils at the site are expansive. Foundation walls shall be designed to support the weight of the full hydrostatic pressure of undrained backfill unless a drainage system is installed in accordance with Sections 1805.4.2 and 1805.4.3.

Exception: Foundation walls extending not more than 8 feet (2438 mm) below grade and laterally supported at the top by flexible diaphragms shall be permitted to be designed for active pressure.

TABLE 1609.6.2
NET PRESSURE COEFFICIENTS, C_{net} [a, b]

STRUCTURE OR PART THEREOF	DESCRIPTION		C_{net} FACTOR			
			Enclosed		Partially enclosed	
	Walls:		+ Internal pressure	- Internal pressure	+ Internal pressure	- Internal pressure
	Windward wall		0.43	0.73	0.11	1.05
	Leeward wall		-0.51	-0.21	-0.83	0.11
	Sidewall		-0.66	-0.35	-0.97	-0.04
	Parapet wall	Windward	1.28		1.28	
		Leeward	-0.85		-0.85	
	Roofs:		Enclosed		Partially enclosed	
	Wind perpendicular to ridge		+ Internal pressure	- Internal pressure	+ Internal pressure	- Internal pressure
	Leeward roof or flat roof		-0.66	-0.35	-0.97	-0.04
	Windward roof slopes:					
	Slope < 2:12 (10°)	Condition 1	-1.09	-0.79	-1.41	-0.47
		Condition 2	-0.28	0.02	-0.60	0.34
	Slope = 4:12 (18°)	Condition 1	-0.73	-0.42	-1.04	-0.11
		Condition 2	-0.05	0.25	-0.37	0.57
	Slope = 5:12 (23°)	Condition 1	-0.58	-0.28	-0.90	0.04
		Condition 2	0.03	0.34	-0.29	0.65
1. Main windforce-resisting frames and systems	Slope = 6:12 (27°)	Condition 1	-0.47	-0.16	-0.78	0.15
		Condition 2	0.06	0.37	-0.25	0.68
	Slope = 7:12 (30°)	Condition 1	-0.37	-0.06	-0.68	0.25
		Condition 2	0.07	0.37	-0.25	0.69
	Slope = 9:12 (37°)	Condition 1	-0.27	0.04	-0.58	0.35
		Condition 2	0.14	0.44	-0.18	0.76
	Slope = 12:12 (45°)		0.14	0.44	-0.18	0.76
	Wind parallel to ridge and flat roofs		-1.09	-0.79	-1.41	-0.47
	Nonbuilding Structures: Chimneys, Tanks and Similar Structures:					
				h/D		
				1	7	25
	Square (Wind normal to face)			0.99	1.07	1.53
	Square (Wind on diagonal)			0.77	0.84	1.15
	Hexagonal or octagonal			0.81	0.97	1.13
	Round			0.65	0.81	0.97
	Open signs and lattice frameworks			Ratio of solid to gross area		
				< 0.1	0.1 to 0.29	0.3 to 0.7
	Flat			1.45	1.30	1.16
	Round			0.87	0.94	1.08

(continued)

TABLE 1609.6.2—continued
NET PRESSURE COEFFICIENTS, C_{net}[a, b]

STRUCTURE OR PART THEREOF	DESCRIPTION		C_{net} FACTOR	
2. Components and cladding not in areas of discontinuity—roofs and overhangs	**Roof elements and slopes**		**Enclosed**	**Partially enclosed**
	Gable of hipped configurations (Zone 1)			
	Flat < Slope < 6:12 (27°) See ASCE 7 Figure 30.4-2B Zone 1			
	Positive	10 square feet or less	0.58	0.89
		100 square feet or more	0.41	0.72
	Negative	10 square feet or less	-1.00	-1.32
		100 square feet or more	-0.92	-1.23
	Overhang: Flat < Slope < 6:12 (27°) See ASCE 7 Figure 30.4-2A Zone 1			
	Negative	10 square feet or less	-1.45	
		100 square feet or more	-1.36	
		500 square feet or more	-0.94	
	6:12 (27°) < Slope < 12:12 (45°) See ASCE 7 Figure 30.4-2C Zone 1			
	Positive	10 square feet or less	0.92	1.23
		100 square feet or more	0.83	1.15
	Negative	10 square feet or less	-1.00	-1.32
		100 square feet or more	-0.83	-1.15
	Monosloped configurations (Zone 1)		**Enclosed**	**Partially enclosed**
	Flat < Slope < 7:12 (30°) See ASCE 7 Figure 30.4-5B Zone 1			
	Positive	10 square feet or less	0.49	0.81
		100 square feet or more	0.41	0.72
	Negative	10 square feet or less	-1.26	-1.57
		100 square feet or more	-1.09	-1.40
	Tall flat-topped roofs h > 60 feet		**Enclosed**	**Partially enclosed**
	Flat < Slope < 2:12 (10°) (Zone 1) See ASCE 7 Figure 30.8-1 Zone 1			
	Negative	10 square feet or less	-1.34	-1.66
		500 square feet or more	-0.92	-1.23
3. Components and cladding in areas of discontinuity—roofs and overhangs (continued)	Gable or hipped configurations at ridges, eaves and rakes (Zone 2)			
	Flat < Slope < 6:12 (27°) See ASCE 7 Figure 30.4-2B Zone 2			
	Positive	10 square feet or less	0.58	0.89
		100 square feet or more	0.41	0.72
	Negative	10 square feet or less	-1.68	-2.00
		100 square feet or more	-1.17	-1.49
	Overhang for Slope Flat < Slope < 6:12 (27°) See ASCE 7 Figure 30.4-2B Zone 2			
	Negative	10 square feet or less	-1.87	
		100 square feet or more	-1.87	
	6:12 (27°) < Slope < 12:12 (45°) Figure 30.4-2C		**Enclosed**	**Partially enclosed**
	Positive	10 square feet or less	0.92	1.23
		100 square feet or more	0.83	1.15
	Negative	10 square feet or less	-1.17	-1.49
		100 square feet or more	-1.00	-1.32
	Overhang for 6:12 (27°) < Slope < 12:12 (45°) See ASCE 7 Figure 30.4-2C Zone 2			
	Negative	10 square feet or less	-1.70	
		500 square feet or more	-1.53	

(continued)

TABLE 1609.6.2—continued
NET PRESSURE COEFFICIENTS, C_{net} [a, b]

STRUCTURE OR PART THEREOF	DESCRIPTION		C_{net} FACTOR	
3. Components and cladding in areas of discontinuity—roofs and overhangs	**Roof elements and slopes**		**Enclosed**	**Partially enclosed**
	Monosloped configurations at ridges, eaves and rakes (Zone 2)			
	Flat < Slope < 7:12 (30°) See ASCE 7 Figure 30.4-5B Zone 2			
	Positive	10 square feet or less	0.49	0.81
		100 square feet or more	0.41	0.72
	Negative	10 square feet or less	-1.51	-1.83
		100 square feet or more	-1.43	-1.74
	Tall flat topped roofs h > 60 feet		**Enclosed**	**Partially enclosed**
	Flat < Slope < 2:12 (10°) (Zone 2) See ASCE 7 Figure 30.8-1 Zone 2			
	Negative	10 square feet or less	-2.11	-2.42
		500 square feet or more	-1.51	-1.83
	Gable or hipped configurations at corners (Zone 3) See ASCE 7 Figure 30.4-2B Zone 3			
	Flat < Slope < 6:12 (27°)		**Enclosed**	**Partially enclosed**
	Positive	10 square feet or less	0.58	0.89
		100 square feet or more	0.41	0.72
	Negative	10 square feet or less	-2.53	-2.85
		100 square feet or more	-1.85	-2.17
	Overhang for Slope Flat < Slope < 6:12 (27°) See ASCE 7 Figure 30.4-2B Zone 3			
	Negative	10 square feet or less	-3.15	
		100 square feet or more	-2.13	
	6:12 (27°) < 12:12 (45°) See ASCE 7 Figure 30.4-2C Zone 3			
	Positive	10 square feet or less	0.92	1.23
		100 square feet or more	0.83	1.15
	Negative	10 square feet or less	-1.17	-1.49
		100 square feet or more	-1.00	-1.32
	Overhang for 6:12 (27°) < Slope < 12:12 (45°)		**Enclosed**	**Partially enclosed**
	Negative	10 square feet or less	-1.70	
		100 square feet or more	-1.53	
	Monosloped Configurations at corners (Zone 3) See ASCE 7 Figure 30.4-5B Zone 3			
	Flat < Slope < 7:12 (30°)			
	Positive	10 square feet or less	0.49	0.81
		100 square feet or more	0.41	0.72
	Negative	10 square feet or less	-2.62	-2.93
		100 square feet or more	-1.85	-2.17
	Tall flat topped roofs h > 60 feet		**Enclosed**	**Partially enclosed**
	Flat < Slope < 2:12 (10°) (Zone 3) See ASCE 7 Figure 30.8-1 Zone 3			
	Negative	10 square feet or less	-2.87	-3.19
		500 square feet or more	-2.11	-2.42
4. Components and cladding not in areas of discontinuity—walls and parapets (continued)	Wall Elements: $h \leq 60$ feet (Zone 4) ASCE 7 Figure 30.4-1		**Enclosed**	**Partially enclosed**
	Positive	10 square feet or less	1.00	1.32
		500 square feet or more	0.75	1.06
	Negative	10 square feet or less	-1.09	-1.40
		500 square feet or more	-0.83	-1.15
	Wall Elements: h > 60 feet (Zone 4) See ASCE 7 Figure 30.6-1 Zone 4			
	Positive	20 square feet or less	0.92	1.23
		500 square feet or more	0.66	0.98

(continued)

TABLE 1609.6.2—continued
NET PRESSURE COEFFICIENTS, C_{net} [a, b]

STRUCTURE OR PART THEREOF	DESCRIPTION		C_{net} FACTOR	
4. Components and cladding not in areas of discontinuity—walls and parapets	Negative	20 square feet or less	-0.92	-1.23
		500 square feet or more	-0.75	-1.06
	Parapet Walls			
	Positive		2.87	3.19
	Negative		-1.68	-2.00
5. Components and cladding in areas of discontinuity—walls and parapets	Wall elements: $h \leq 60$ feet (Zone 5) ASCE 7 Figure 30.4-1		**Enclosed**	**Partially enclosed**
	Positive	10 square feet or less	1.00	1.32
		500 square feet or more	0.75	1.06
	Negative	10 square feet or less	-1.34	-1.66
		500 square feet or more	-0.83	-1.15
	Wall elements: $h > 60$ feet (Zone 5) See ASCE 7 Figure 30.6-1 Zone 4			
	Positive	20 square feet or less	0.92	1.23
		500 square feet or more	0.66	0.98
	Negative	20 square feet or less	-1.68	-2.00
		500 square feet or more	-1.00	-1.32
	Parapet walls			
	Positive		3.64	3.95
	Negative		-2.45	-2.76

For SI: 1 foot = 304.8 mm, 1 square foot = 0.0929m^2, 1 degree = 0.0175 rad.

a. Linear interpolation between values in the table is permitted.

b. Some C_{net} values have been grouped together. Less conservative results may be obtained by applying ASCE 7 provisions.

TABLE 1610.1
LATERAL SOIL LOAD

DESCRIPTION OF BACKFILL MATERIAL[c]	UNIFIED SOIL CLASSIFICATION	DESIGN LATERAL SOIL LOAD[a] (pound per square foot per foot of depth)	
		Active pressure	At-rest pressure
Well-graded, clean gravels; gravel-sand mixes	GW	30	60
Poorly graded clean gravels; gravel-sand mixes	GP	30	60
Silty gravels, poorly graded gravel-sand mixes	GM	40	60
Clayey gravels, poorly graded gravel-and-clay mixes	GC	45	60
Well-graded, clean sands; gravelly sand mixes	SW	30	60
Poorly graded clean sands; sand-gravel mixes	SP	30	60
Silty sands, poorly graded sand-silt mixes	SM	45	60
Sand-silt clay mix with plastic fines	SM-SC	45	100
Clayey sands, poorly graded sand-clay mixes	SC	60	100
Inorganic silts and clayey silts	ML	45	100
Mixture of inorganic silt and clay	ML-CL	60	100
Inorganic clays of low to medium plasticity	CL	60	100
Organic silts and silt clays, low plasticity	OL	Note b	Note b
Inorganic clayey silts, elastic silts	MH	Note b	Note b
Inorganic clays of high plasticity	CH	Note b	Note b
Organic clays and silty clays	OH	Note b	Note b

For SI: 1 pound per square foot per foot of depth = 0.157 kPa/m, 1 foot = 304.8 mm.

a. Design lateral soil loads are given for moist conditions for the specified soils at their optimum densities. Actual field conditions shall govern. Submerged or saturated soil pressures shall include the weight of the buoyant soil plus the hydrostatic loads.

b. Unsuitable as backfill material.

c. The definition and classification of soil materials shall be in accordance with ASTM D 2487.

SECTION 1611
RAIN LOADS

1611.1 Design rain loads. Each portion of a roof shall be designed to sustain the load of rainwater that will accumulate on it if the primary drainage system for that portion is blocked plus the uniform load caused by water that rises above the inlet of the secondary drainage system at its design flow. The design rainfall shall be based on the 100-year hourly rainfall rate indicated in Figure 1611.1 or on other rainfall rates determined from *approved* local weather data.

$R = 5.2(d_s + d_h)$ **(Equation 16-36)**

For SI: $R = 0.0098(d_s + d_h)$

where:

d_h = Additional depth of water on the undeflected roof above the inlet of secondary drainage system at its design flow (i.e., the hydraulic head), in inches (mm).

d_s = Depth of water on the undeflected roof up to the inlet of secondary drainage system when the primary drainage system is blocked (i.e., the static head), in inches (mm).

R = Rain load on the undeflected roof, in psf (kN/m$_2$). When the phrase "undeflected roof" is used, deflections from loads (including dead loads) shall not be considered when determining the amount of rain on the roof.

1611.2 Ponding instability. Susceptible bays of roofs shall be evaluated for ponding instability in accordance with Section 8.4 of ASCE 7.

1611.3 Controlled drainage. Roofs equipped with hardware to control the rate of drainage shall be equipped with a secondary drainage system at a higher elevation that limits accumulation of water on the roof above that elevation. Such roofs shall be designed to sustain the load of rainwater that will accumulate on them to the elevation of the secondary drainage system plus the uniform load caused by water that rises above the inlet of the secondary drainage system at its design flow determined from Section 1611.1. Such roofs shall also be checked for ponding instability in accordance with Section 1611.2.

SECTION 1612
FLOOD LOADS

1612.1 General. Within *flood hazard areas* as established in Section 1612.3, all new construction of buildings, structures and portions of buildings and structures, including substantial improvement and restoration of substantial damage to buildings and structures, shall be designed and constructed to resist the effects of flood hazards and flood loads. For buildings that are located in more than one *flood hazard area*, the provisions associated with the most restrictive *flood hazard area* shall apply.

1612.2 Definitions. The following terms are defined in Chapter 2:

BASE FLOOD.

BASE FLOOD ELEVATION.

BASEMENT.

COASTAL A ZONE.

COASTAL HIGH HAZARD AREA.

DESIGN FLOOD.

DESIGN FLOOD ELEVATION.

DRY FLOODPROOFING.

EXISTING CONSTRUCTION.

EXISTING STRUCTURE.

FLOOD or FLOODING.

FLOOD DAMAGE-RESISTANT MATERIALS.

FLOOD HAZARD AREA.

FLOOD INSURANCE RATE MAP (FIRM).

FLOOD INSURANCE STUDY.

FLOODWAY.

LOWEST FLOOR.

SPECIAL FLOOD HAZARD AREA.

START OF CONSTRUCTION.

SUBSTANTIAL DAMAGE.

SUBSTANTIAL IMPROVEMENT.

1612.3 Establishment of flood hazard areas. To establish *flood hazard areas*, the applicable governing authority shall adopt a flood hazard map and supporting data. The flood hazard map shall include, at a minimum, areas of special flood hazard as identified by the Federal Emergency Management Agency in an engineering report entitled "The Flood Insurance Study for **[INSERT NAME OF JURISDICTION]**," dated **[INSERT DATE OF ISSUANCE]**, as amended or revised with the accompanying Flood Insurance Rate Map (FIRM) and Flood Boundary and Floodway Map (FBFM) and related supporting data along with any revisions thereto. The adopted flood hazard map and supporting data are hereby adopted by reference and declared to be part of this section.

1612.3.1 Design flood elevations. Where design flood elevations are not included in the *flood hazard areas* established in Section 1612.3, or where floodways are not designated, the *building official* is authorized to require the applicant to:

1. Obtain and reasonably utilize any design flood elevation and floodway data available from a federal, state or other source; or
2. Determine the design flood elevation and/or floodway in accordance with accepted hydrologic and hydraulic engineering practices used to define special flood hazard areas. Determinations shall be undertaken by a *registered design professional* who shall document that the technical methods used reflect currently accepted engineering practice.

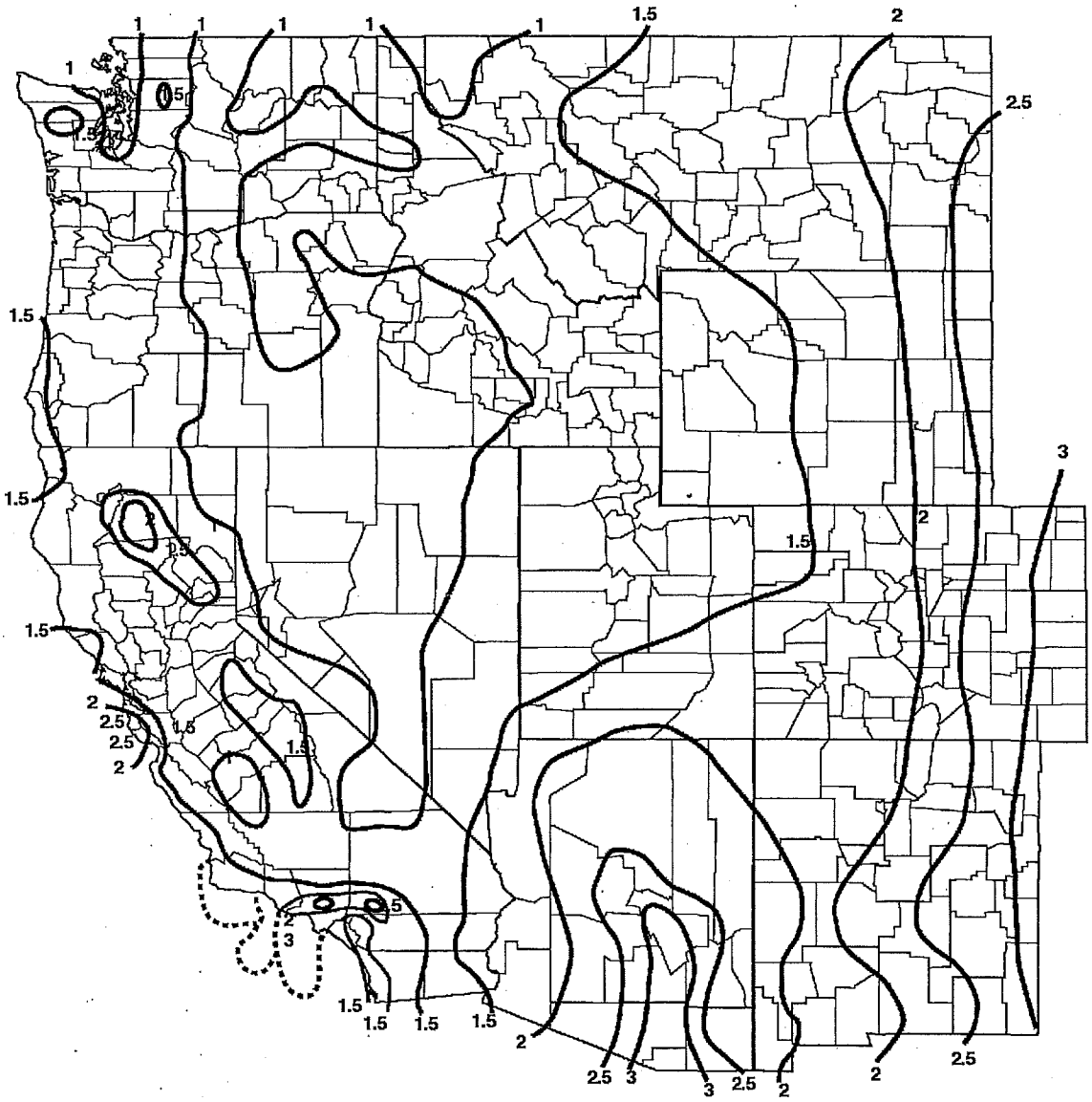

[P] FIGURE 1611.1
100-YEAR, 1-HOUR RAINFALL (INCHES) WESTERN UNITED STATES

For SI: 1 inch = 25.4 mm.
Source: National Weather Service, National Oceanic and Atmospheric Administration, Washington, DC.

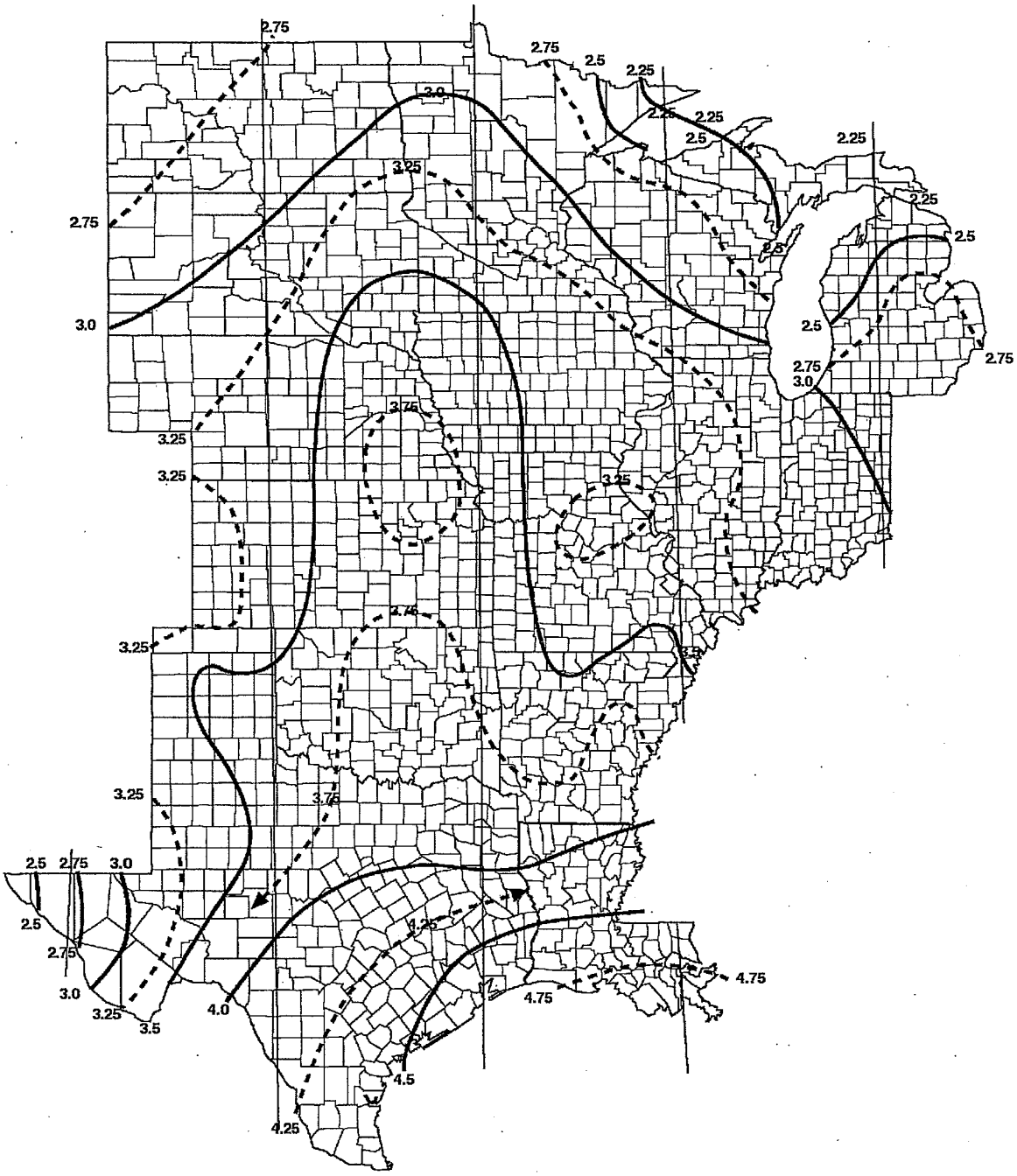

[P] FIGURE 1611.1—continued
100-YEAR, 1-HOUR RAINFALL (INCHES) CENTRAL UNITED STATES

For SI: 1 inch = 25.4 mm.
Source: National Weather Service, National Oceanic and Atmospheric Administration, Washington, DC.

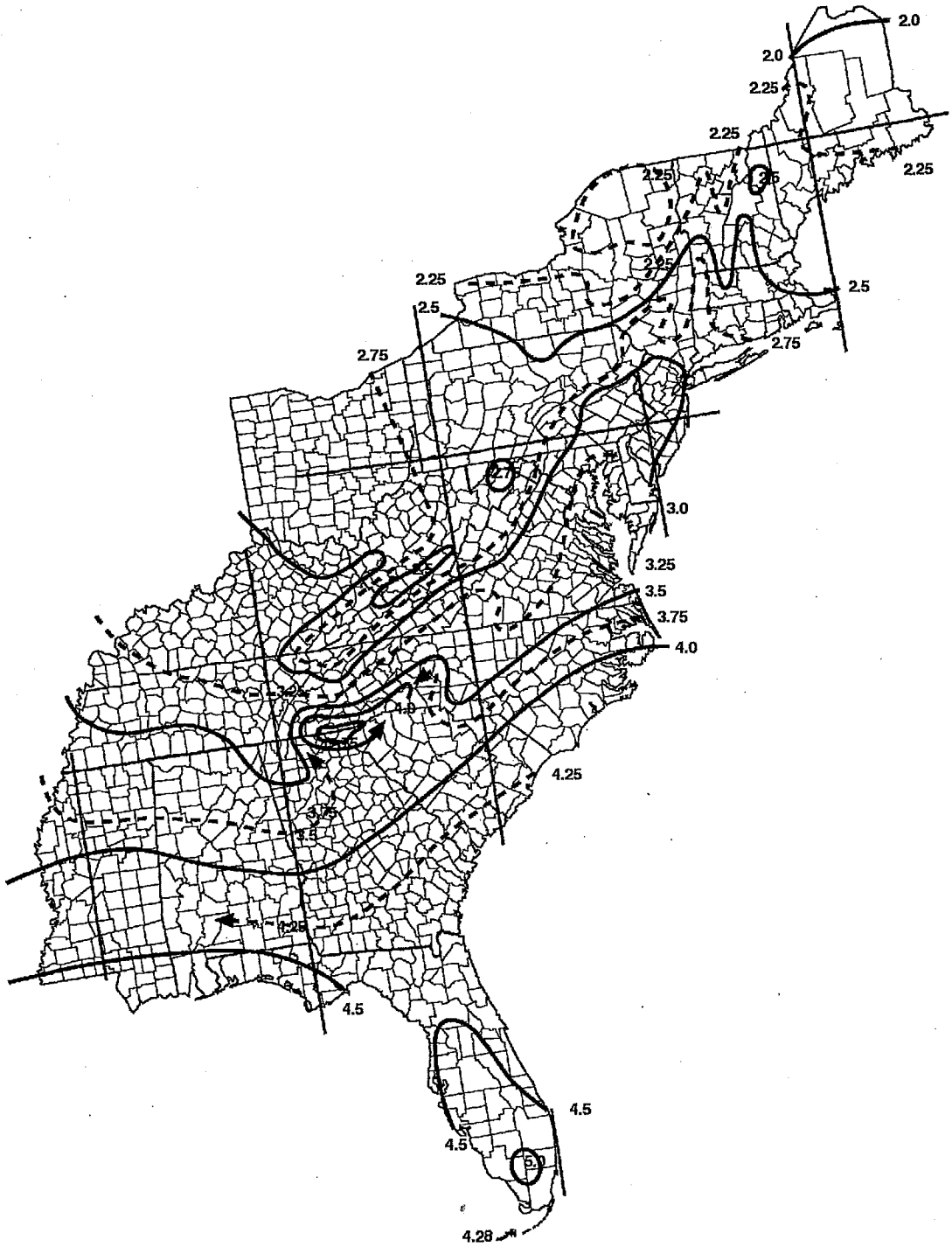

[P] FIGURE 1611.1—continued
100-YEAR, 1-HOUR RAINFALL (INCHES) EASTERN UNITED STATES

For SI: 1 inch = 25.4 mm.

Source: National Weather Service, National Oceanic and Atmospheric Administration, Washington, DC.

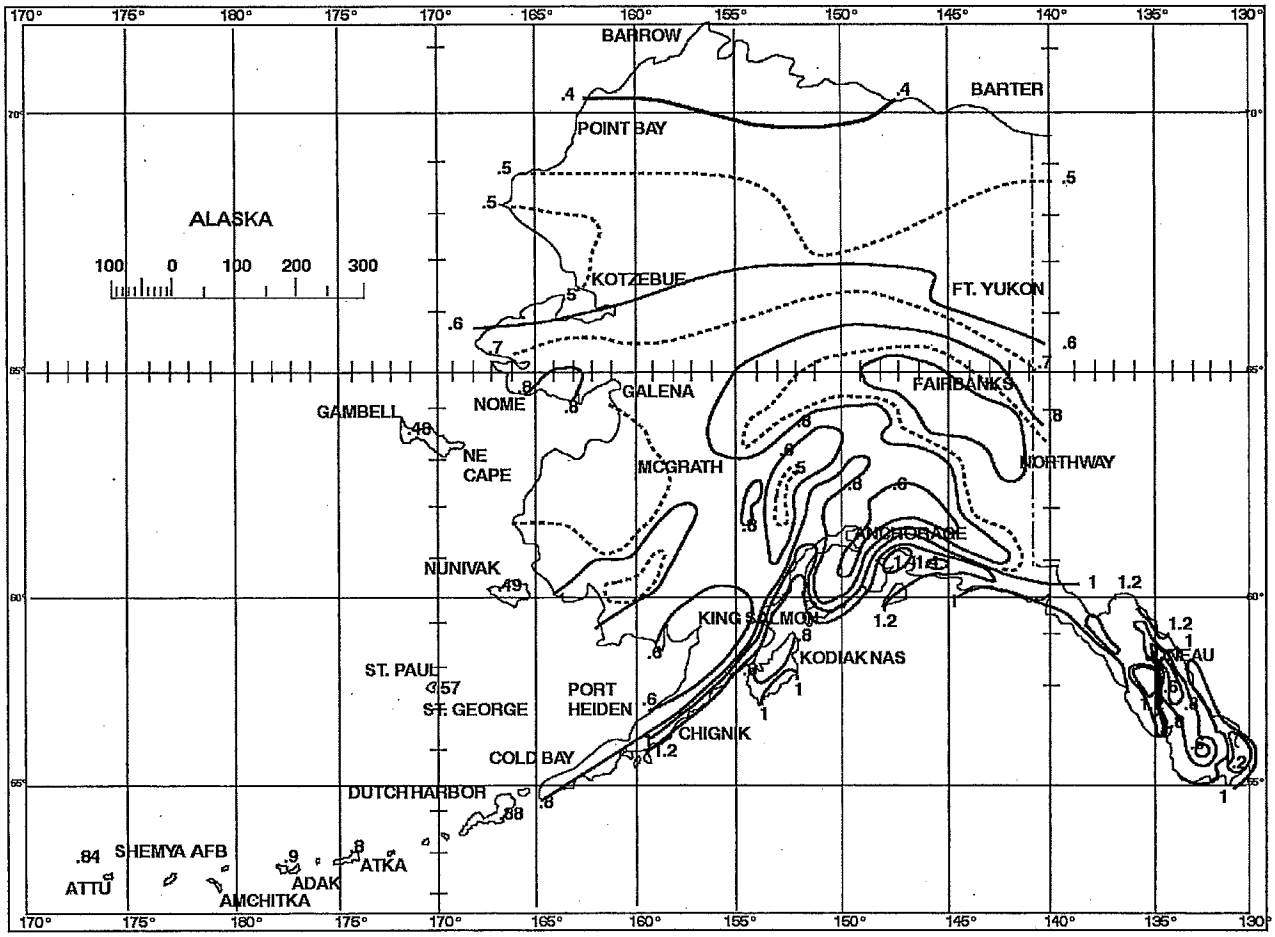

[P] FIGURE 1611.1—continued
100-YEAR, 1-HOUR RAINFALL (INCHES) ALASKA

For SI: 1 inch = 25.4 mm.
Source: National Weather Service, National Oceanic and Atmospheric Administration, Washington, DC.

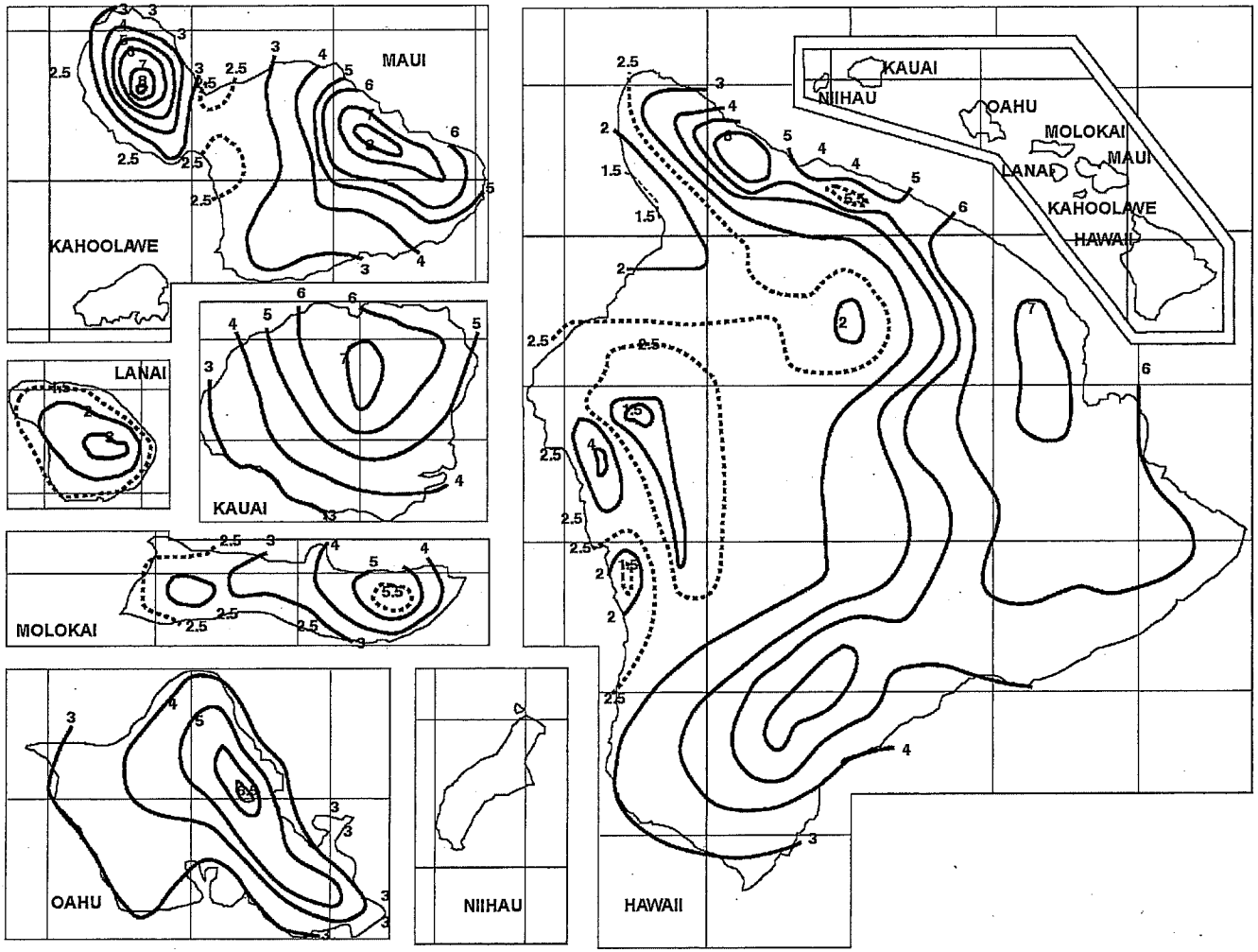

[P] FIGURE 1611.1—continued
100-YEAR, 1-HOUR RAINFALL (INCHES) HAWAII

For SI: 1 inch = 25.4 mm.
Source: National Weather Service, National Oceanic and Atmospheric Administration, Washington, DC.

1612.3.2 Determination of impacts. In riverine *flood hazard areas* where design flood elevations are specified but floodways have not been designated, the applicant shall provide a floodway analysis that demonstrates that the proposed work will not increase the design flood elevation more than 1 foot (305 mm) at any point within the jurisdiction of the applicable governing authority.

1612.4 Design and construction. The design and construction of buildings and structures located in *flood hazard areas,* including *coastal high hazard areas* and *coastal A zones,* shall be in accordance with Chapter 5 of ASCE 7 and ASCE 24.

1612.5 Flood hazard documentation. The following documentation shall be prepared and sealed by a *registered design professional* and submitted to the *building official*:

1. For construction in *flood hazard areas* other than *coastal high hazard areas* or *coastal A zones*:
   - 1.1. The elevation of the lowest floor, including the basement, as required by the lowest floor elevation inspection in Section 110.3.3 and for the final inspection in Section 110.3.10.1.
   - 1.2. For fully enclosed areas below the design flood elevation where provisions to allow for the automatic entry and exit of floodwaters do not meet the minimum requirements in Section 2.6.2.1 of ASCE 24, *construction documents* shall include a statement that the design will provide for equalization of hydrostatic flood forces in accordance with Section 2.6.2.2 of ASCE 24.
   - 1.3. For dry floodproofed nonresidential buildings, *construction documents* shall include a statement that the dry floodproofing is designed in accordance with ASCE 24.
2. For construction in *coastal high hazard areas* and *coastal A zones*:
   - 2.1. The elevation of the bottom of the lowest horizontal structural member as required by the lowest floor elevation inspection in Section 110.3.3 and for the final inspection in Section 110.3.10.1.
   - 2.2. *Construction documents* shall include a statement that the building is designed in accordance with ASCE 24, including that the pile or column foundation and building or structure to be attached thereto is designed to be anchored to resist flotation, collapse and lateral movement due to the effects of wind and flood loads acting simultaneously on all building components, and other load requirements of Chapter 16.
   - 2.3. For breakaway walls designed to have a resistance of more than 20 psf (0.96 kN/m^2) determined using allowable stress design, *construction documents* shall include a statement that the breakaway wall is designed in accordance with ASCE 24.

SECTION 1613
EARTHQUAKE LOADS

1613.1 Scope. Every structure, and portion thereof, including nonstructural components that are permanently attached to structures and their supports and attachments, shall be designed and constructed to resist the effects of earthquake motions in accordance with ASCE 7, excluding Chapter 14 and Appendix 11A. The *seismic design category* for a structure is permitted to be determined in accordance with Section 1613 or ASCE 7.

Exceptions:

1. Detached one- and two-family dwellings, assigned to *Seismic Design Category* A, B or C, or located where the mapped short-period spectral response acceleration, S_S, is less than 0.4 g.
2. The seismic force-resisting system of wood-frame buildings that conform to the provisions of Section 2308 are not required to be analyzed as specified in this section.
3. Agricultural storage structures intended only for incidental human occupancy.
4. Structures that require special consideration of their response characteristics and environment that are not addressed by this code or ASCE 7 and for which other regulations provide seismic criteria, such as vehicular bridges, electrical transmission towers, hydraulic structures, buried utility lines and their appurtenances and nuclear reactors.

1613.2 Definitions. The following terms are defined in Chapter 2:

DESIGN EARTHQUAKE GROUND MOTION.

MECHANICAL SYSTEMS.

ORTHOGONAL.

RISK-TARGETED MAXIMUM CONSIDERED EARTHQUAKE (MCE_R) GROUND MOTION RESPONSE ACCELERATION.

SEISMIC DESIGN CATEGORY.

SEISMIC FORCE-RESISTING SYSTEM.

SITE CLASS.

SITE COEFFICIENTS.

1613.3 Seismic ground motion values. Seismic ground motion values shall be determined in accordance with this section.

1613.3.1 Mapped acceleration parameters. The parameters S_S and S_1 shall be determined from the 0.2 and 1-second spectral response accelerations shown on Figures 1613.3.1(1) through 1613.3.1(8). Where S_1 is less than or equal to 0.04 and S_S is less than or equal to 0.15, the structure is permitted to be assigned *Seismic Design Category* A.

1613.3.2 Site class definitions. Based on the site soil properties, the site shall be classified as *Site Class* A, B, C, D, E or F in accordance with Chapter 20 of ASCE 7.

Where the soil properties are not known in sufficient detail to determine the site class, Site Class D shall be used unless the building official or geotechnical data determines Site Class E or F soils are present at the site.

1613.3.3 Site coefficients and adjusted maximum considered earthquake spectral response acceleration parameters. The maximum considered earthquake spectral response acceleration for short periods, S_{MS}, and at 1-second period, S_{M1}, adjusted for *site class* effects shall be determined by Equations 16-37 and 16-38, respectively:

$$S_{MS} = F_a S_s \qquad \textbf{(Equation 16-37)}$$

$$S_{M1} = F_v S_1 \qquad \textbf{(Equation 16-38)}$$

where:

F_a = Site coefficient defined in Table 1613.3.3(1).

F_v = Site coefficient defined in Table 1613.3.3(2).

S_S = The mapped spectral accelerations for short periods as determined in Section 1613.3.1.

S_1 = The mapped spectral accelerations for a 1-second period as determined in Section 1613.3.1.

1613.3.4 Design spectral response acceleration parameters. Five-percent damped design spectral response acceleration at short periods, S_{DS}, and at 1-second period, S_{D1}, shall be determined from Equations 16-39 and 16-40, respectively:

$$S_{DS} = \frac{2}{3} S_{MS} \qquad \textbf{(Equation 16-39)}$$

$$S_{D1} = \frac{2}{3} S_{M1} \qquad \textbf{(Equation 16-40)}$$

where:

S_{MS} = The maximum considered earthquake spectral response accelerations for short period as determined in Section 1613.3.3.

S_{M1} = The maximum considered earthquake spectral response accelerations for 1-second period as determined in Section 1613.3.3.

TABLE 1613.3.3(1)
VALUES OF SITE COEFFICIENT F_a [a]

SITE CLASS	MAPPED SPECTRAL RESPONSE ACCELERATION AT SHORT PERIOD				
	$S_s \leq 0.25$	$S_s = 0.50$	$S_s = 0.75$	$S_s = 1.00$	$S_s \geq 1.25$
A	0.8	0.8	0.8	0.8	0.8
B	1.0	1.0	1.0	1.0	1.0
C	1.2	1.2	1.1	1.0	1.0
D	1.6	1.4	1.2	1.1	1.0
E	2.5	1.7	1.2	0.9	0.9
F	Note b	Note b	Note b	Note b	Note b

a. Use straight-line interpolation for intermediate values of mapped spectral response acceleration at short period, S_s.
b. Values shall be determined in accordance with Section 11.4.7 of ASCE 7.

TABLE 1613.3.3(2)
VALUES OF SITE COEFFICIENT F_v [a]

SITE CLASS	MAPPED SPECTRAL RESPONSE ACCELERATION AT 1-SECOND PERIOD				
	$S_1 \leq 0.1$	$S_1 = 0.2$	$S_1 = 0.3$	$S_1 = 0.4$	$S_1 \geq 0.5$
A	0.8	0.8	0.8	0.8	0.8
B	1.0	1.0	1.0	1.0	1.0
C	1.7	1.6	1.5	1.4	1.3
D	2.4	2.0	1.8	1.6	1.5
E	3.5	3.2	2.8	2.4	2.4
F	Note b	Note b	Note b	Note b	Note b

a. Use straight-line interpolation for intermediate values of mapped spectral response acceleration at 1-second period, S_1.
b. Values shall be determined in accordance with Section 11.4.7 of ASCE 7.

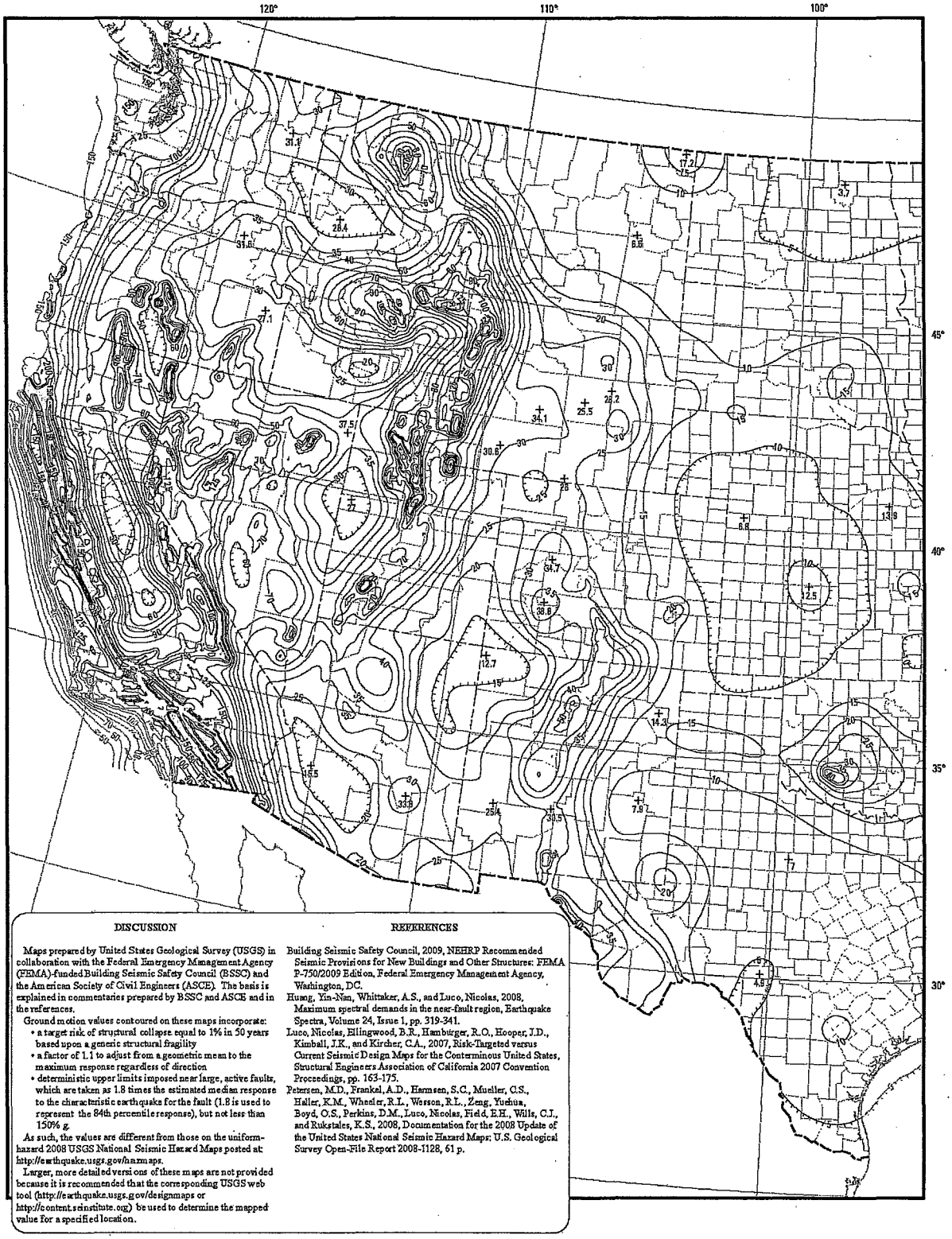

FIGURE 1613.3.1(1)
RISK-TARGETED MAXIMUM CONSIDERED EARTHQUAKE (MCE_R) GROUND MOTION RESPONSE ACCELERATIONS FOR THE CONTERMINOUS UNITED STATES OF 0.2-SECOND SPECTRAL RESPONSE ACCELERATION (5% OF CRITICAL DAMPING), SITE CLASS B

(continued)

1974

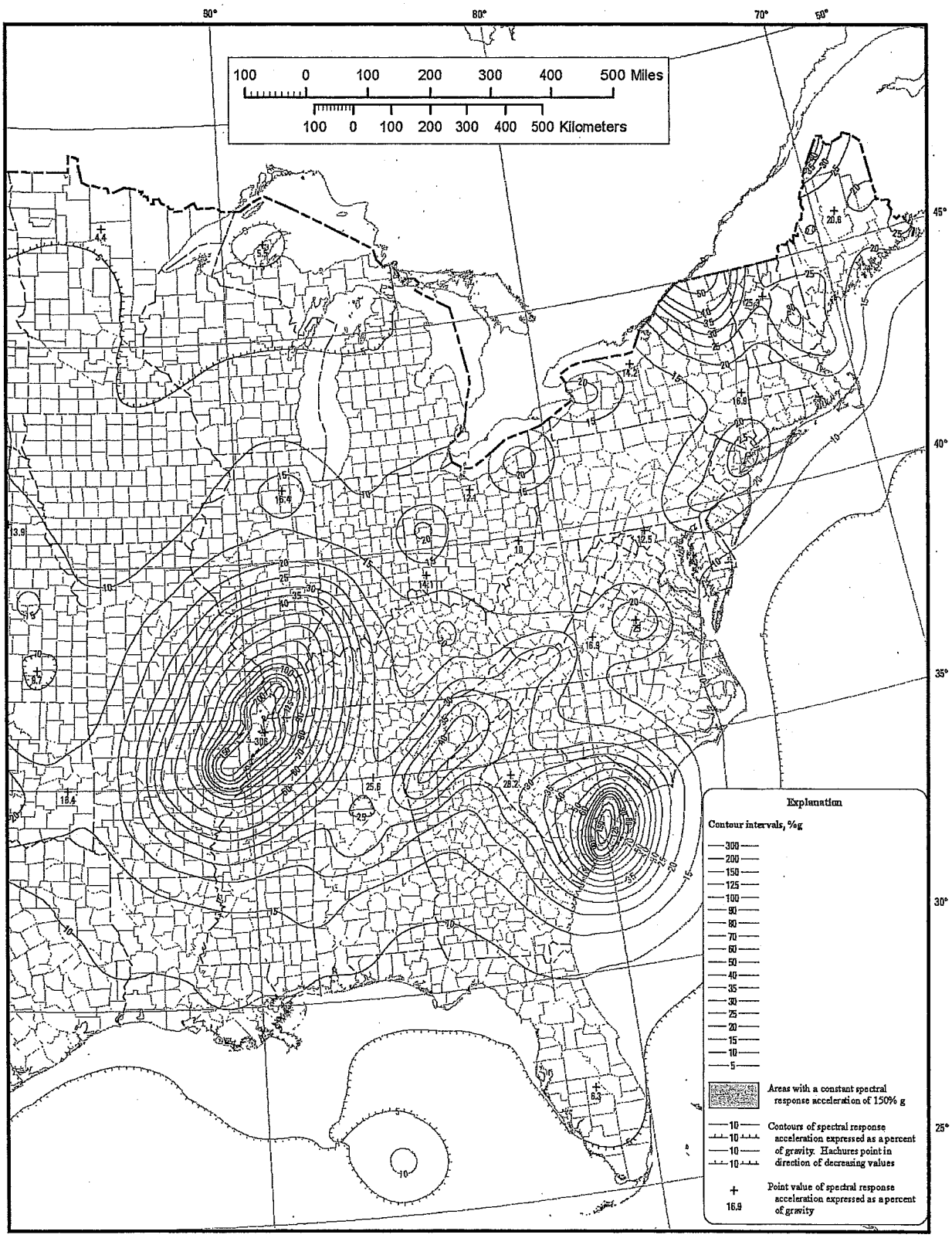

FIGURE 1613.3.1(1)—continued
RISK-TARGETED MAXIMUM CONSIDERED EARTHQUAKE (MCE_R) GROUND MOTION RESPONSE ACCELERATIONS FOR THE CONTERMINOUS UNITED STATES OF 0.2-SECOND SPECTRAL RESPONSE ACCELERATION (5% OF CRITICAL DAMPING), SITE CLASS B

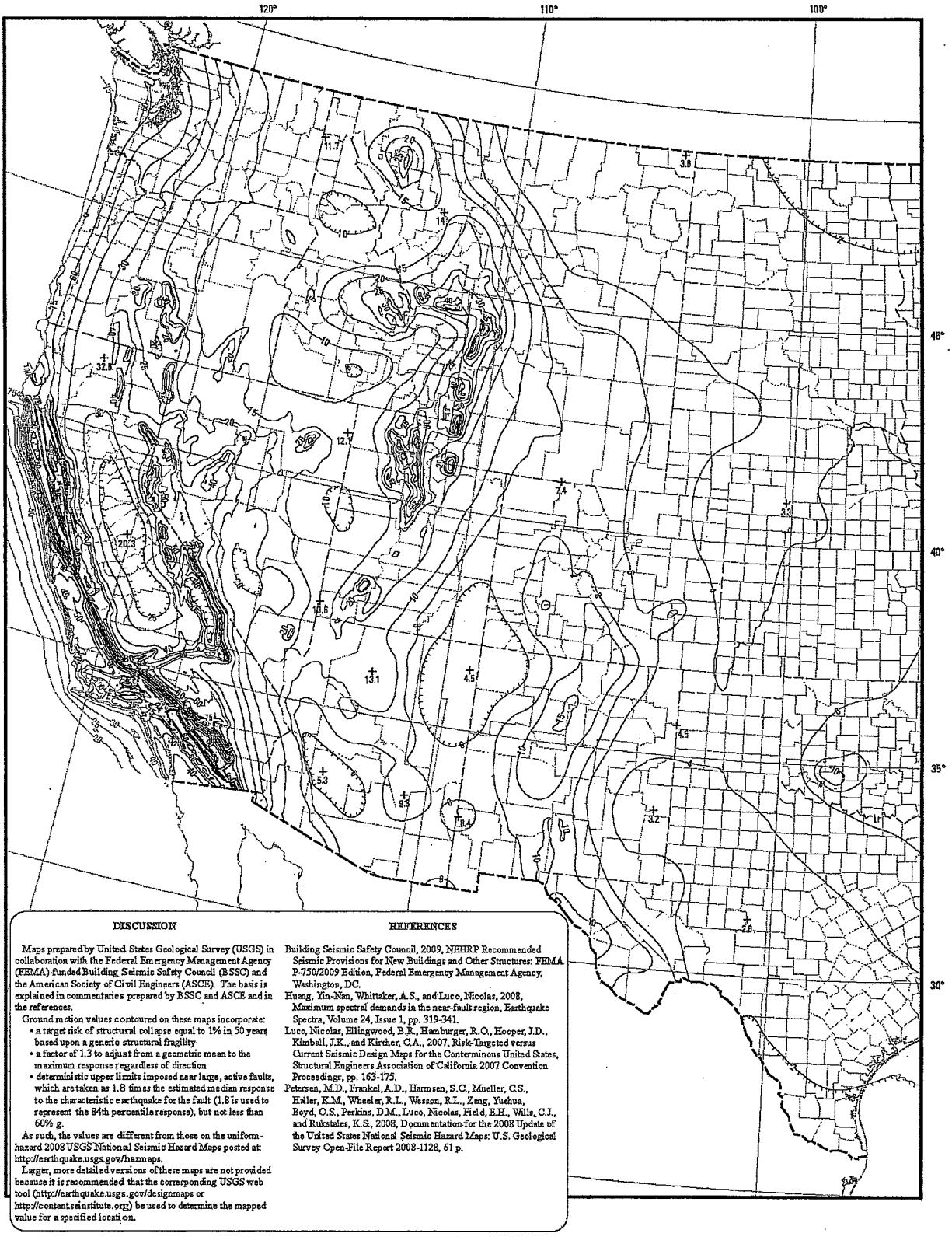

FIGURE 1613.3.1(2)
RISK-TARGETED MAXIMUM CONSIDERED EARTHQUAKE (MCE_R) GROUND MOTION RESPONSE ACCELERATIONS FOR THE CONTERMINOUS UNITED STATES OF 1-SECOND SPECTRAL RESPONSE ACCELERATION (5% OF CRITICAL DAMPING), SITE CLASS B

(continued)

1976

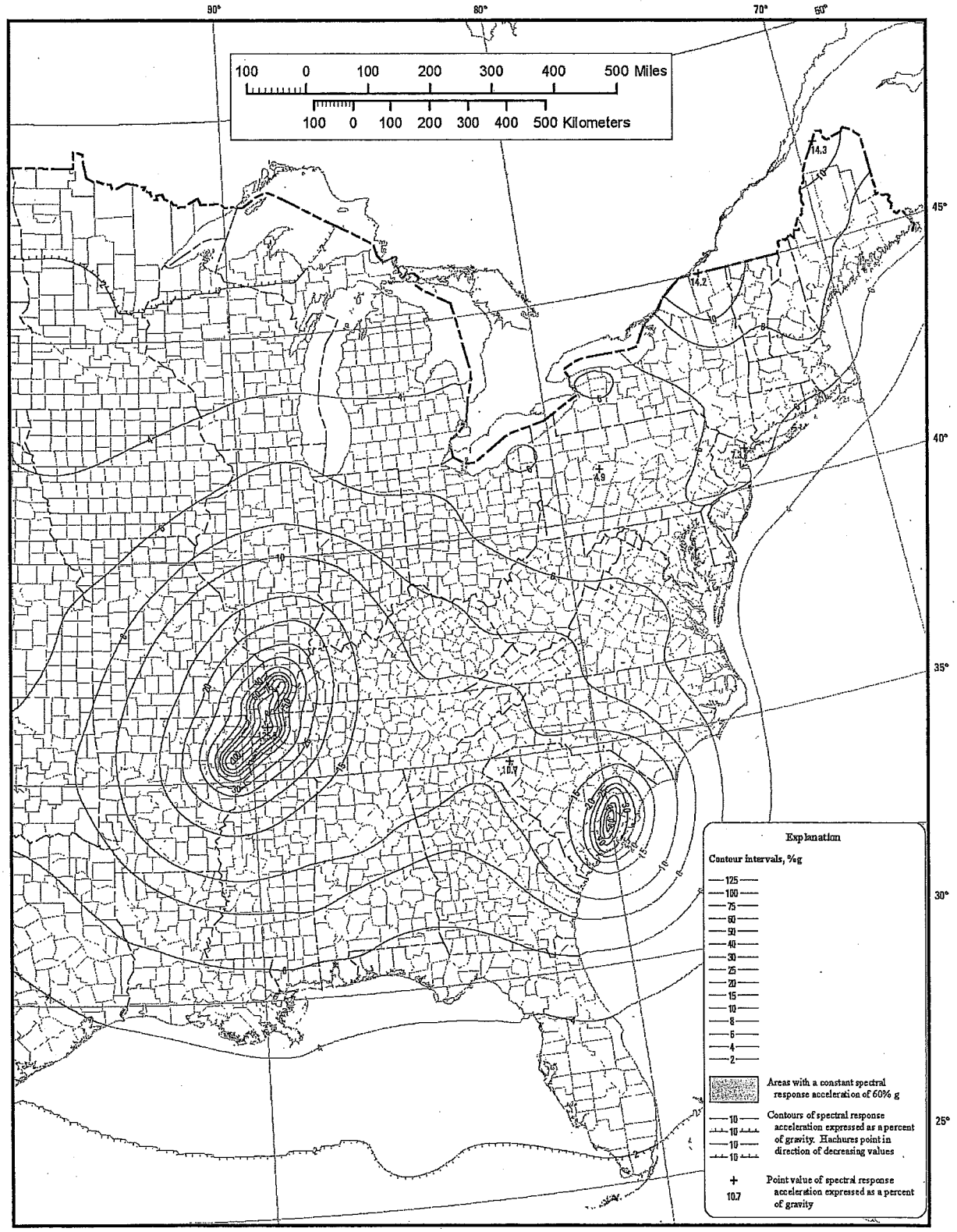

FIGURE 1613.3.1(2)—continued
RISK-TARGETED MAXIMUM CONSIDERED EARTHQUAKE (MCE_R) GROUND MOTION RESPONSE ACCELERATIONS FOR THE CONTERMINOUS UNITED STATES OF 1-SECOND SPECTRAL RESPONSE ACCELERATION (5% OF CRITICAL DAMPING), SITE CLASS B

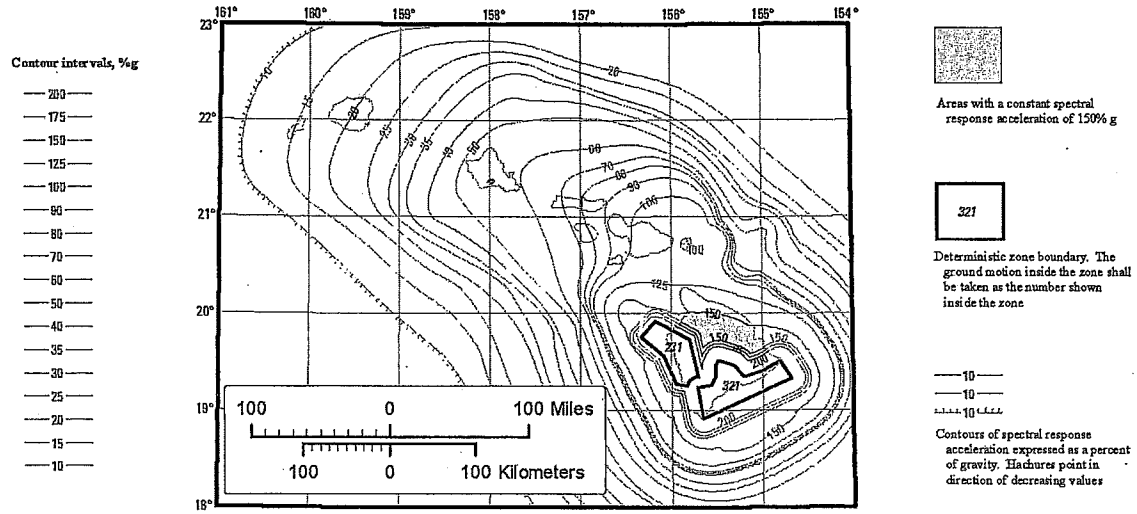

0.2 Second Spectral Response Acceleration (5% of Critical Damping)

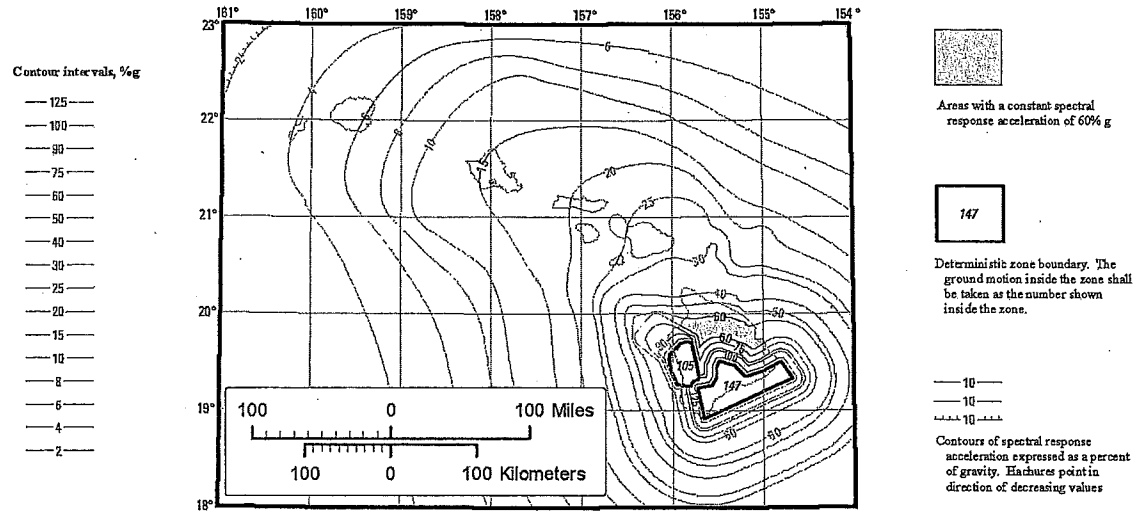

1.0 Second Spectral Response Acceleration (5% of Critical Damping)

DISCUSSION

Maps prepared by United States Geological Survey (USGS) in collaboration with the Federal Emergency Management Agency (FEMA)-funded Building Seismic Safety Council (BSSC) and the American Society of Civil Engineers (ASCE). The basis is explained in commentaries prepared by BSSC and ASCE and in the references.

Ground motion values contoured on these maps incorporate:

- a target risk of structural collapse equal to 1% in 50 years based upon a generic structural fragility
- deterministic upper limits imposed near large, active faults, which are taken as 1.8 times the estimated median response to the characteristic earthquake for the fault (1.8 is used to represent the 84th percentile response), but not less than 150% and 60% g for 0.2 and 1.0 sec, respectively.

As such, the values are different from those on the uniform-hazard 1998 USGS National Seismic Hazard Maps for Hawaii posted at http://earthquake.usgs.gov/hazmaps.

Larger, more detailed versions of these maps are not provided because it is recommended that the corresponding USGS web tool (http://earthquake.usgs.gov/designmaps or http://contents.seinstitute.org) be used to determine the mapped value for a specified location.

REFERENCES

Building Seismic Safety Council, 2009, NEHRP Recommended Seismic Provisions for New Buildings and Other Structures: FEMA P-750/2009 Edition, Federal Emergency Management Agency, Washington, DC.

Huang, Yin-Nan, Whittaker, A.S., and Luco, Nicolas, 2008, Maximum spectral demands in the near-fault region, Earthquake Spectra, Volume 24, Issue 1, pp. 319-341.

Klein, F., Frankel, A.D., Mueller, C.S., Wesson, R.L., and Okubo, P., 2001, Seismic hazard in Hawaii: high rate of large earthquakes and probabilistic ground-motion maps, Bulletin of the Seismological Society of America, Volume 91, pp. 479-498.

Luco, Nicolas, Ellingwood, B.R., Hamburger, R.O., Hooper, J.D., Kimball, J.K., and Kircher, C.A., 2007, Risk-Targeted versus Current Seismic Design Maps for the Conterminous United States, Structural Engineers Association of California 2007 Convention Proceedings, pp. 163-175.

FIGURE 1613.3.1(3)
RISK-TARGETED MAXIMUM CONSIDERED EARTHQUAKE (MCE_R) GROUND MOTION RESPONSE ACCELERATIONS FOR HAWAII OF 0.2- AND 1-SECOND SPECTRAL RESPONSE ACCELERATION (5% OF CRITICAL DAMPING), SITE CLASS B

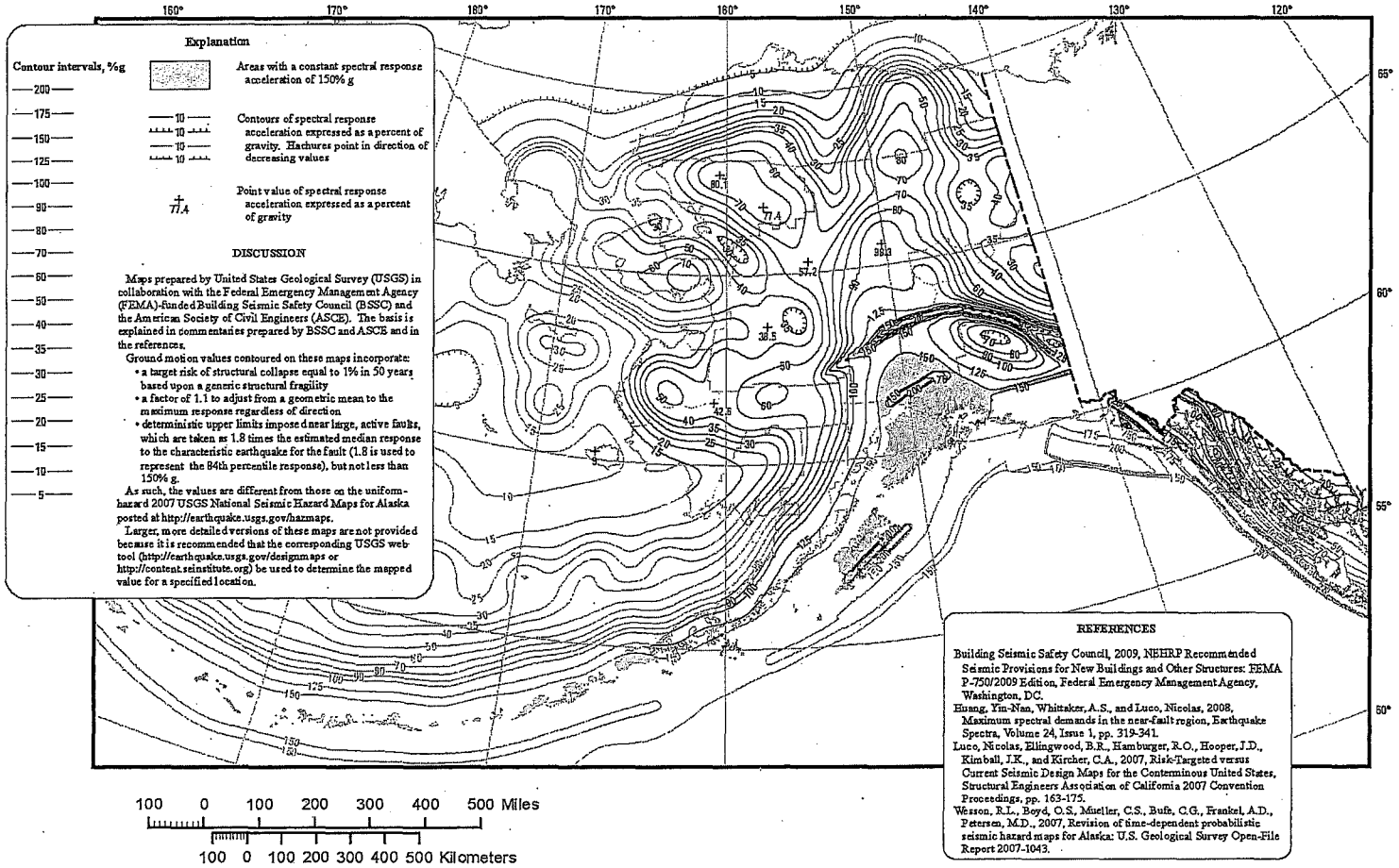

FIGURE 1613.3.1(4)
RISK-TARGETED MAXIMUM CONSIDERED EARTHQUAKE (MCE_R) GROUND MOTION RESPONSE ACCELERATIONS FOR ALASKA OF 0.2-SECOND SPECTRAL RESPONSE ACCELERATION (5% OF CRITICAL DAMPING), SITE CLASS B

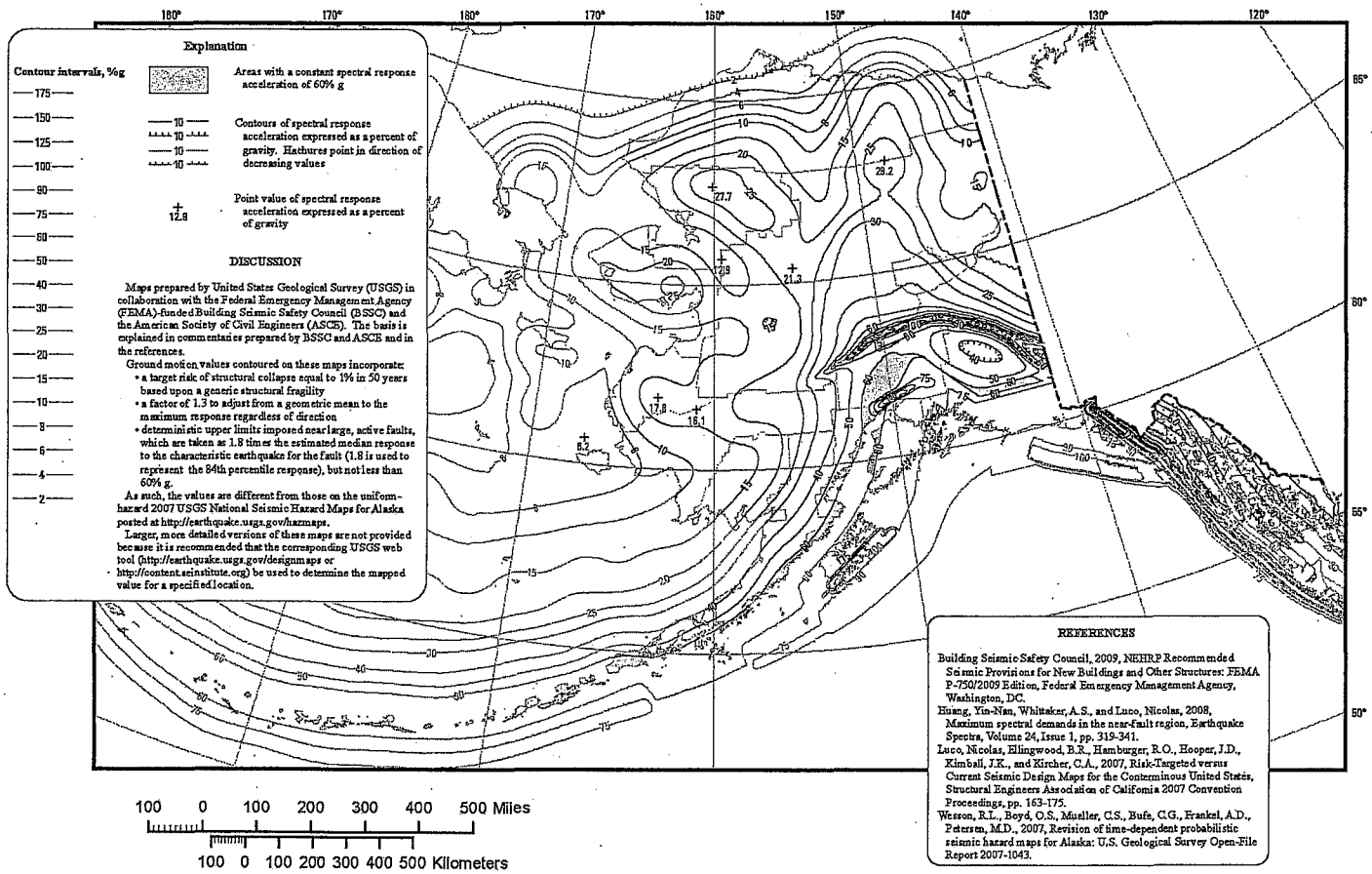

FIGURE 1613.3.1(5)
RISK-TARGETED MAXIMUM CONSIDERED EARTHQUAKE (MCE_R) GROUND MOTION RESPONSE ACCELERATIONS FOR ALASKA OF 1.0-SECOND SPECTRAL RESPONSE ACCELERATION (5% OF CRITICAL DAMPING), SITE CLASS B

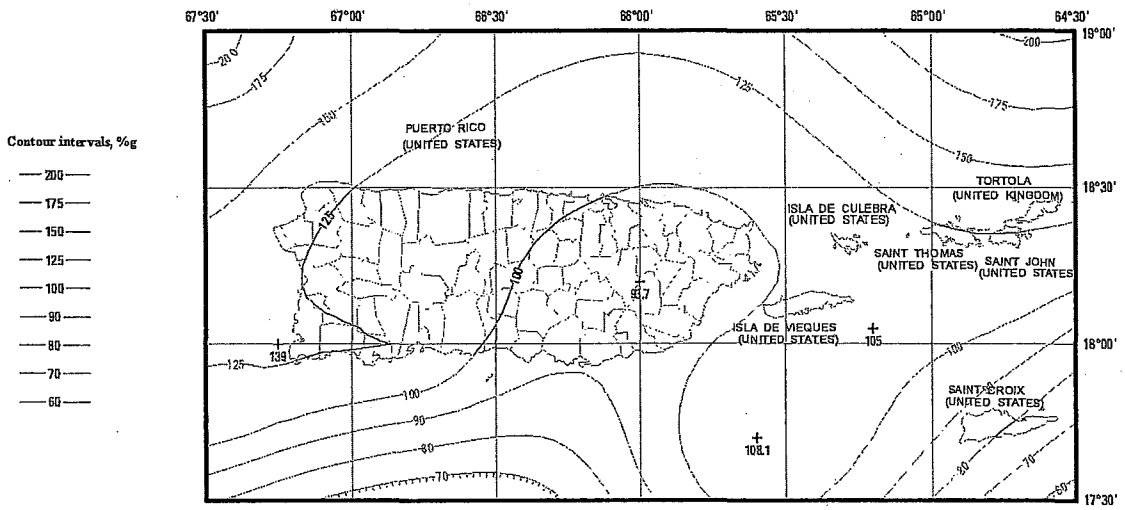

0.2 Second Spectral Response Acceleration (5% of Critical Damping)

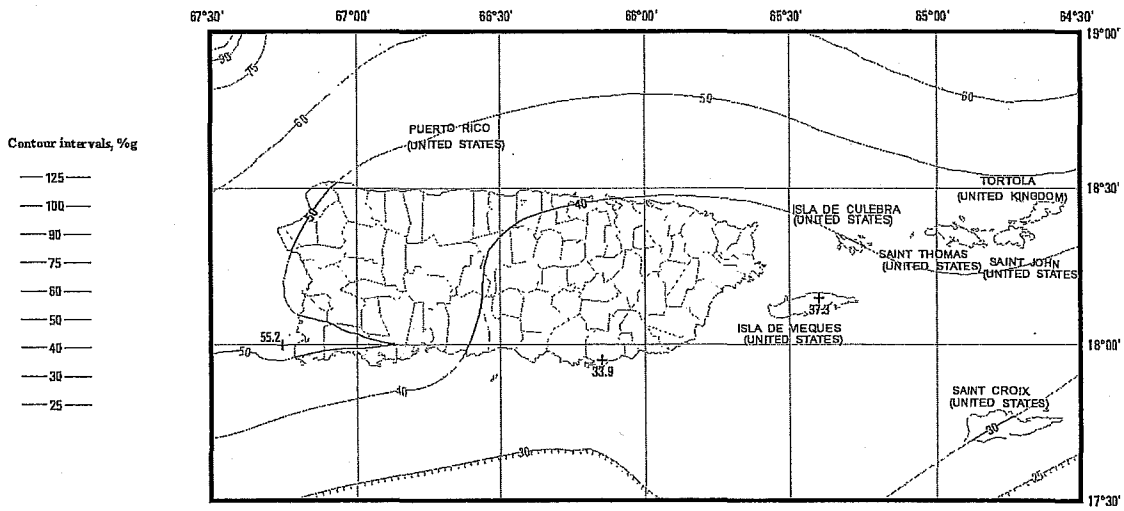

1.0 Second Spectral Response Acceleration (5% of Critical Damping)

Explanation

10

10

10

Contours of spectral response acceleration expressed as a percent of gravity. Hachures point in direction of decreasing values

93.7

Point value of spectral response acceleration expressed as a percent of gravity

DISCUSSION

Maps prepared by United States Geological Survey (USGS) in collaboration with the Federal Emergency Management Agency (FEMA)-funded Building Seismic Safety Council (BSSC) and the American Society of Civil Engineers (ASCE). The basis is explained in commentaries prepared by BSSC and ASCE and in the references.

Ground motion values contoured on these maps incorporate:

- a target risk of structural collapse equal to 1% in 50 years based upon a generic structural fragility
- a factor of 1.1 and 1.3 for 0.2 and 1.0 sec, respectively, to adjust from a geometric mean to the maximum response regardless of direction
- deterministic upper limits imposed near large, active faults, which are taken as 1.8 times the estimated median response to the characteristic earthquake for the fault (1.8 is used to represent the 84th percentile response), but not less than 150% and 60% g for 0.2 and 1.0 sec, respectively.

As such, the values are different from those on the uniform-hazard 2003 USGS National Seismic Hazard Maps for Puerto Rico and the U.S. Virgin Islands posted at http://earthquake.usgs.gov/hazmaps.

Larger, more detailed versions of these maps are not provided because it is recommended that the corresponding USGS web tool (http://earthquake.usgs.gov/designmaps or http://content.seinstitute.org) be used to determine the mapped value for a specified location.

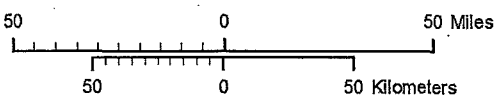

REFERENCES

Building Seismic Safety Council, 2009, NEHRP Recommended Seismic Provisions for New Buildings and Other Structures: FEMA P-750/2009 Edition, Federal Emergency Management Agency, Washington, DC.

Huang, Yin-Nan, Whittaker, A.S., and Luco, Nicolas, 2008, Maximum spectral demands in the near-fault region, Earthquake Spectra, Volume 24, Issue 1, pp. 319-341.

Luco, Nicolas, Ellingwood, B.R., Hamburger, R.O., Hooper, J.D., Kimball, J.K., and Kircher, C.A., 2007, Risk-Targeted versus Current Seismic Design Maps for the Conterminous United States, Structural Engineers Association of California 2007 Convention Proceedings, pp. 163-175.

Mueller, C.S., Frankel, A.D., Petersen, M.D., and Leyendecker, E.V., 2003, Documentation for the 2003 USGS Seismic Hazard Maps for Puerto Rico and the U.S. Virgin Islands: U.S. Geological Survey Open-File Report 03-379.

FIGURE 1613.3.1(6)
RISK-TARGETED MAXIMUM CONSIDERED EARTHQUAKE (MCE_R) GROUND MOTION RESPONSE ACCELERATIONS FOR PUERTO RICO AND THE UNITED STATES VIRGIN ISLANDS OF 0.2- AND 1-SECOND SPECTRAL RESPONSE ACCELERATION (5% OF CRITICAL DAMPING), SITE CLASS B

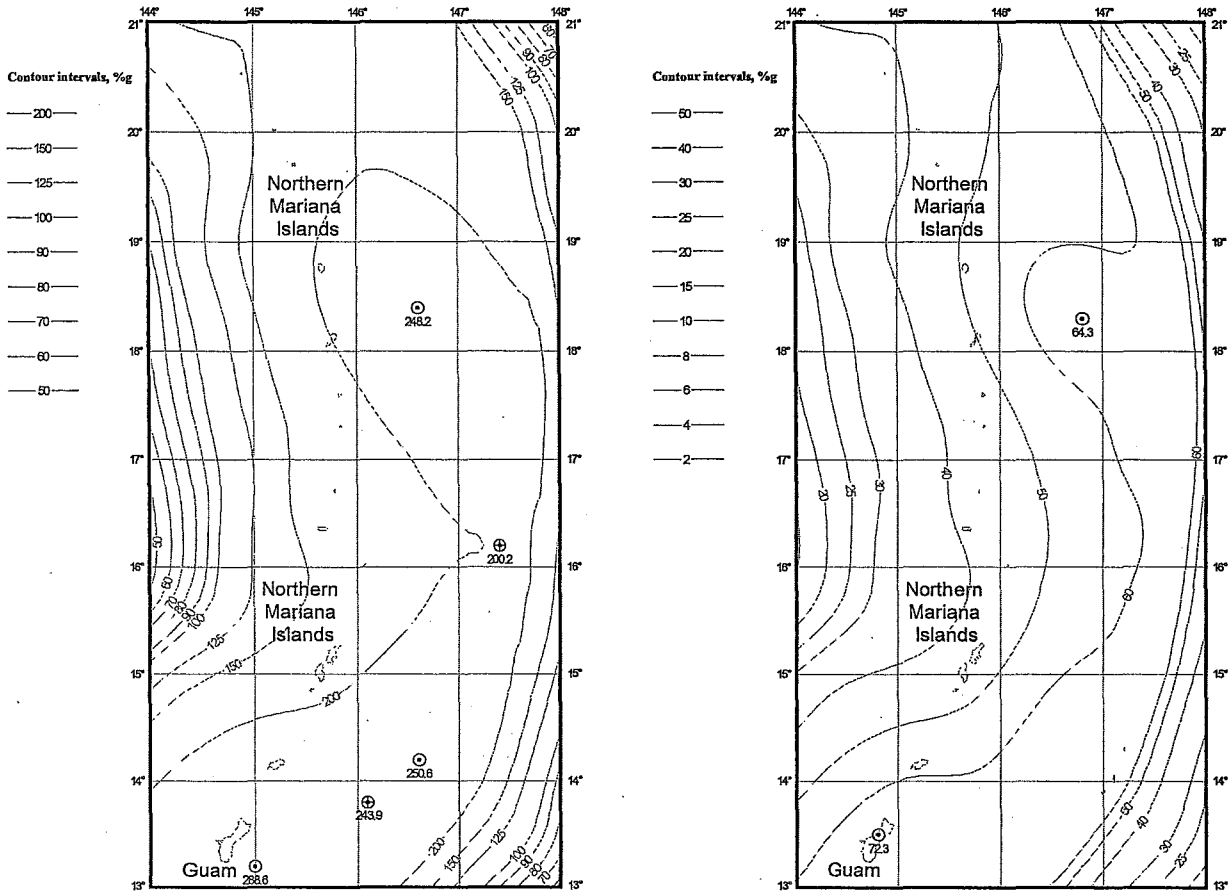

0.2 Second Spectral Response Acceleration (5% of Critical Damping)

1.0 Second Spectral Response Acceleration (5% of Critical Damping)

100 0 100 200 Miles

100 0 100 200 Kilometers

Explanation

Contours of spectral response acceleration expressed as a percent of gravity.

—10—

—10—

Point values of spectral response acceleration expressed as a percent of gravity.

⊕ 200.2 Local minimum

⊙ 250.6 Local maximum

⊕ 243.9 Saddle point

DISCUSSION

Maps prepared by United States Geological Survey (USGS) in collaboration with the Federal Emergency Management Agency (FEMA)-funded Building Seismic Safety Council (BSSC). The basis is explained in commentary prepared by BSSC and in the references.

Ground motion values contoured on these maps incorporate:

- a target risk of structural collapse equal to 1% in 50 years based upon a generic structural fragility
- a factor of 1.1 and 1.3 for 0.2 and 1.0 sec, respectively, to adjust from a geometric mean to the maximum response regardless of direction
- deterministic upper limits imposed near large, active faults, which are taken as 1.8 times the estimated median response to the characteristic earthquake for the fault (1.8 is used to represent the 84th percentile response), but not less than 150% and 60% g for 0.2 and 1.0 sec, respectively.

As such, the values are different from those on the uniform-hazard 2012 USGS National Seismic Hazard Maps for Guam and the Northern Mariana Islands posted at http://earthquake.usgs.gov/hazmaps.

Larger, more detailed versions of these maps are not provided because it is recommended that the corresponding USGS web tool (http://earthquake.usgs.gov/designmaps) be used to determine the mapped value for a specified location.

REFERENCES

Building Seismic Safety Council, 2009, NEHRP Recommended Seismic Provisions for New Buildings and Other Structures: FEMA P-750/2009 Edition, Federal Emergency Management Agency, Washington, DC.

Huang, Yin-Nan, Whittaker, A.S., and Luco, Nicolas, 2008, Maximum spectral demands in the near-fault region, Earthquake Spectra, Volume 24, Issue 1, pp. 319-341.

Luco, Nicolas, Ellingwood, B.R., Hamburger, R.O., Hooper, J.D., Kimball, J.K., and Kircher, C.A., 2007, Risk-Targeted versus Current Seismic Design Maps for the Conterminous United States, Structural Engineers Association of California 2007 Convention Proceedings, pp. 163-175.

Mueller, C.S., Haller, K.M., Luco, Nicolas, Petersen, M.D., and Frankel, A.D., 2012, Seismic Hazard Assessment for Guam and the Northern Mariana Islands: U.S. Geological Survey Open-File Report 2012–1015.

FIGURE 1613.3.1(7)
RISK-TARGETED MAXIMUM CONSIDERED EARTHQUAKE (MCE_R) GROUND MOTION RESPONSE ACCELERATIONS FOR GUAM AND THE NORTHERN MARIANA ISLANDS OF 0.2- AND 1-SECOND SPECTRAL RESPONSE ACCELERATION (5% OF CRITICAL DAMPING), SITE CLASS B

1982

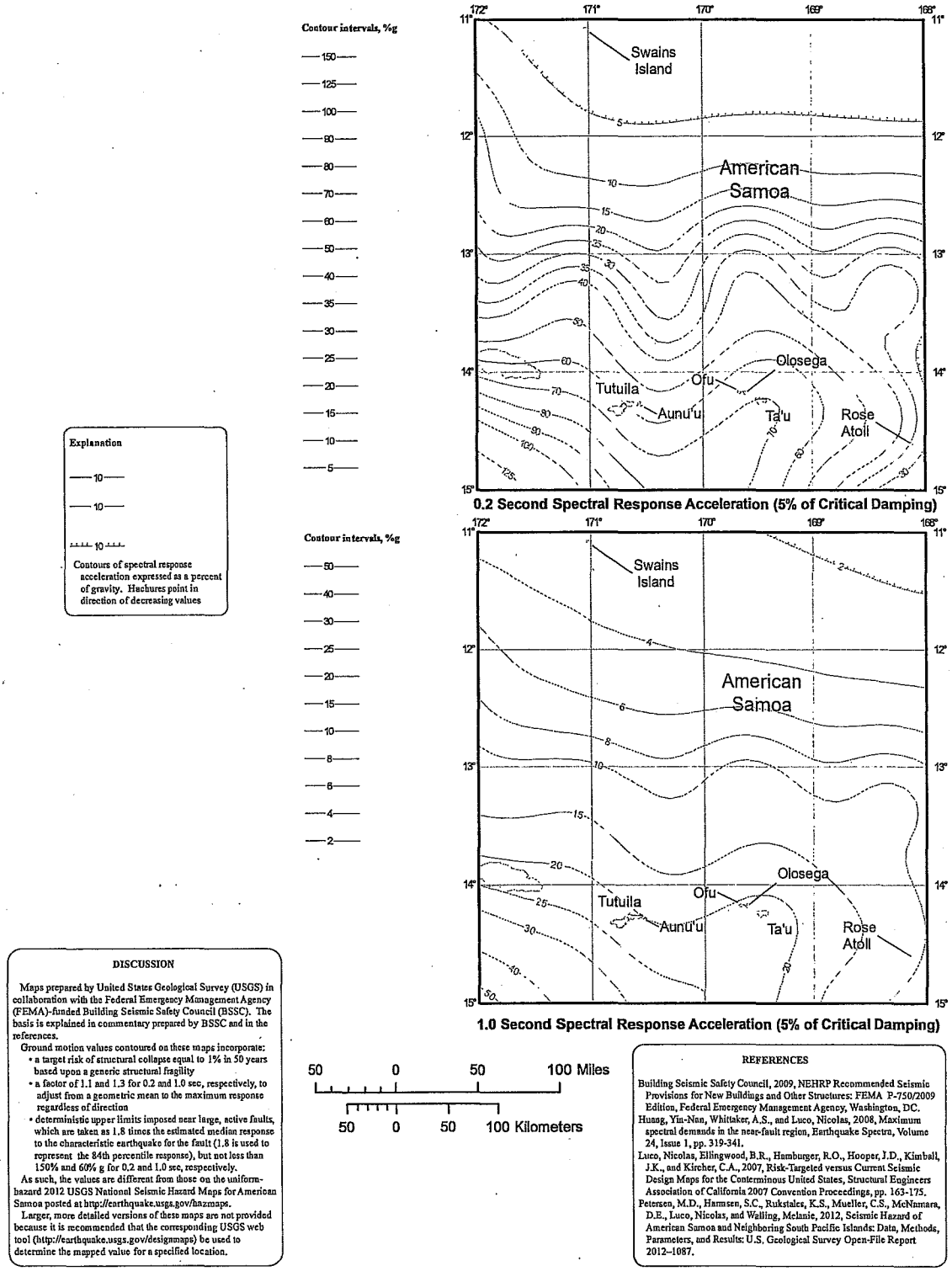

FIGURE 1613.3.1(8)
RISK-TARGETED MAXIMUM CONSIDERED EARTHQUAKE (MCE_R) GROUND MOTION RESPONSE ACCELERATIONS FOR AMERICAN SAMOA OF 0.2- AND 1-SECOND SPECTRAL RESPONSE ACCELERATION (5% OF CRITICAL DAMPING), SITE CLASS B

1613.3.5 Determination of seismic design category. Structures classified as *Risk Category* I, II or III that are located where the mapped spectral response acceleration parameter at 1-second period, S_1, is greater than or equal to 0.75 shall be assigned to *Seismic Design Category* E. Structures classified as *Risk Category* IV that are located where the mapped spectral response acceleration parameter at 1-second period, S_1, is greater than or equal to 0.75 shall be assigned to *Seismic Design Category* F. All other structures shall be assigned to a *seismic design category* based on their *risk category* and the design spectral response acceleration parameters, S_{DS} and S_{D1}, determined in accordance with Section 1613.3.4 or the site-specific procedures of ASCE 7. Each building and structure shall be assigned to the more severe *seismic design category* in accordance with Table 1613.3.5(1) or 1613.3.5(2), irrespective of the fundamental period of vibration of the structure, T.

1613.3.5.1 Alternative seismic design category determination. Where S_1 is less than 0.75, the *seismic design category* is permitted to be determined from Table 1613.3.5(1) alone when all of the following apply:

1. In each of the two orthogonal directions, the approximate fundamental period of the structure, T_a, in each of the two orthogonal directions determined in accordance with Section 12.8.2.1 of ASCE 7, is less than 0.8 T_s determined in accordance with Section 11.4.5 of ASCE 7.
2. In each of the two orthogonal directions, the fundamental period of the structure used to calculate the story drift is less than T_s.
3. Equation 12.8-2 of ASCE 7 is used to determine the seismic response coefficient, C_s.
4. The diaphragms are rigid or are permitted to be idealized as rigid in accordance with Section 12.3.1 of ASCE 7 or, for diaphragms permitted to be idealized as flexible in accordance with Section 12.3.1 of ASCE 7, the distances between vertical elements of the seismic force-resisting system do not exceed 40 feet (12 192 mm).

1613.3.5.2 Simplified design procedure. Where the alternate simplified design procedure of ASCE 7 is used, the *seismic design category* shall be determined in accordance with ASCE 7.

1613.4 Alternatives to ASCE 7. The provisions of Section 1613.4 shall be permitted as alternatives to the relevant provisions of ASCE 7.

1613.4.1 Additional seismic force-resisting systems for seismically isolated structures. Add the following exception to the end of Section 17.5.4.2 of ASCE 7:

Exception: For isolated structures designed in accordance with this standard, the structural system limitations including structural height limits, in Table 12.2-1 for ordinary steel concentrically braced frames (OCBFs) as defined in Chapter 11 and ordinary moment frames (OMFs) as defined in Chapter 11 are permitted to be taken as 160 feet (48 768 mm) for structures assigned to *Seismic Design Category* D, E or F, provided that the following conditions are satisfied:

1. The value of R_I as defined in Chapter 17 is taken as 1.
2. For OMFs and OCBFs, design is in accordance with AISC 341.

1613.5 Amendments to ASCE 7. The provisions of Section 1613.5 shall be permitted as an amendment to the relevant provisions of ASCE 7.

1613.5.1 Transfer of anchorage forces into diaphragm. Modify ASCE 7 Section 12.11.2.2.1 as follows:

12.11.2.2.1 Transfer of anchorage forces into diaphragm. Diaphragms shall be provided with continuous ties or struts between diaphragm chords to distribute these anchorage forces into the diaphragms. Diaphragm

TABLE 1613.3.5(1)
SEISMIC DESIGN CATEGORY BASED ON SHORT-PERIOD (0.2 second) RESPONSE ACCELERATION

VALUE OF S_{DS}	RISK CATEGORY		
	I or II	III	IV
$S_{DS} < 0.167g$	A	A	A
$0.167g \le S_{DS} < 0.33g$	B	B	C
$0.33g \le S_{DS} < 0.50g$	C	C	D
$0.50g \le S_{DS}$	D	D	D

TABLE 1613.3.5(2)
SEISMIC DESIGN CATEGORY BASED ON 1-SECOND PERIOD RESPONSE ACCELERATION

VALUE OF S_{D1}	RISK CATEGORY		
	I or II	III	IV
$S_{D1} < 0.067g$	A	A	A
$0.067g \le S_{D1} < 0.133g$	B	B	C
$0.133g \le S_{D1} < 0.20g$	C	C	D
$0.20g \le S_{D1}$	D	D	D

connections shall be positive, mechanical or welded. Added chords are permitted to be used to form subdiaphragms to transmit the anchorage forces to the main continuous cross-ties. The maximum length-to-width ratio of a wood, wood structural panel or untopped steel deck sheathed structural subdiaphragm that serves as part of the continuous tie system shall be 2.5 to 1. Connections and anchorages capable of resisting the prescribed forces shall be provided between the diaphragm and the attached components. Connections shall extend into the diaphragm a sufficient distance to develop the force transferred into the diaphragm.

1613.6 Ballasted photovoltaic panel systems. Ballasted, roof-mounted *photovoltaic panel systems* need not be rigidly attached to the roof or supporting structure. Ballasted nonpenetrating systems shall be designed and installed only on roofs with slopes not more than one unit vertical in 12 units horizontal. Ballasted nonpenetrating systems shall be designed to resist sliding and uplift resulting from lateral and vertical forces as required by Section 1605, using a coefficient of friction determined by acceptable engineering principles. In structures assigned to *Seismic Design Category* C, D, E or F, ballasted nonpenetrating systems shall be designed to accommodate seismic displacement determined by nonlinear response-history analysis or shake-table testing, using input motions consistent with ASCE 7 lateral and vertical seismic forces for nonstructural components on roofs.

SECTION 1614
ATMOSPHERIC ICE LOADS

1614.1 General. Ice-sensitive structures shall be designed for atmospheric ice loads in accordance with Chapter 10 of ASCE 7.

SECTION 1615
STRUCTURAL INTEGRITY

1615.1 General. *High-rise buildings* that are assigned to *Risk Category* III or IV shall comply with the requirements of this section. Frame structures shall comply with the requirements of Section 1615.3. Bearing wall structures shall comply with the requirements of Section 1615.4.

1615.2 Definitions. The following words and terms are defined in Chapter 2:

BEARING WALL STRUCTURE.

FRAME STRUCTURE.

1615.3 Frame structures. Frame structures shall comply with the requirements of this section.

1615.3.1 Concrete frame structures. Frame structures constructed primarily of reinforced or prestressed concrete, either cast-in-place or precast, or a combination of these, shall conform to the requirements of Section 4.10 of ACI 318. Where ACI 318 requires that nonprestressed reinforcing or prestressing steel pass through the region bounded by the longitudinal column reinforcement, that reinforcing or prestressing steel shall have a minimum nominal tensile strength equal to two-thirds of the required one-way vertical strength of the connection of the floor or roof system to the column in each direction of beam or slab reinforcement passing through the column.

Exception: Where concrete slabs with continuous reinforcement having an area not less than 0.0015 times the concrete area in each of two orthogonal directions are present and are either monolithic with or equivalently bonded to beams, girders or columns, the longitudinal reinforcing or prestressing steel passing through the column reinforcement shall have a nominal tensile strength of one-third of the required one-way vertical strength of the connection of the floor or roof system to the column in each direction of beam or slab reinforcement passing through the column.

1615.3.2 Structural steel, open web steel joist or joist girder, or composite steel and concrete frame structures. Frame structures constructed with a structural steel frame or a frame composed of open web steel joists, joist girders with or without other structural steel elements or a frame composed of composite steel or composite steel joists and reinforced concrete elements shall conform to the requirements of this section.

1615.3.2.1 Columns. Each column splice shall have the minimum design strength in tension to transfer the design dead and live load tributary to the column between the splice and the splice or base immediately below.

1615.3.2.2 Beams. End connections of all beams and girders shall have a minimum nominal axial tensile strength equal to the required vertical shear strength for *allowable stress design* (ASD) or two-thirds of the required shear strength for *load and resistance factor design* (LRFD) but not less than 10 kips (45 kN). For the purpose of this section, the shear force and the axial tensile force need not be considered to act simultaneously.

Exception: Where beams, girders, open web joist and joist girders support a concrete slab or concrete slab on metal deck that is attached to the beam or girder with not less than $^3/_8$-inch-diameter (9.5 mm) headed shear studs, at a spacing of not more than 12 inches (305 mm) on center, averaged over the length of the member, or other attachment having equivalent shear strength, and the slab contains continuous distributed reinforcement in each of two orthogonal directions with an area not less than 0.0015 times the concrete area, the nominal axial tension strength of the end connection shall be permitted to be taken as half the required vertical shear strength for ASD or one-third of the required shear strength for LRFD, but not less than 10 kips (45 kN).

1615.4 Bearing wall structures. Bearing wall structures shall have vertical ties in all load-bearing walls and longitudinal ties, transverse ties and perimeter ties at each floor level in accordance with this section and as shown in Figure 1615.4.

1615.4.1 Concrete wall structures. Precast bearing wall structures constructed solely of reinforced or prestressed concrete, or combinations of these shall conform to the requirements of Sections 16.2.4 and 16.2.5 of ACI 318.

1615.4.2 Other bearing wall structures. Ties in bearing wall structures other than those covered in Section 1615.4.1 shall conform to this section.

1615.4.2.1 Longitudinal ties. Longitudinal ties shall consist of continuous reinforcement in slabs; continuous or spliced decks or sheathing; continuous or spliced members framing to, within or across walls; or connections of continuous framing members to walls. Longitudinal ties shall extend across interior load-bearing walls and shall connect to exterior load-bearing walls and shall be spaced at not greater than 10 feet (3038 mm) on center. Ties shall have a minimum nominal tensile strength, T_T, given by Equation 16-41. For ASD the minimum nominal tensile strength shall be permitted to be taken as 1.5 times the allowable tensile stress times the area of the tie.

$$T_T = w\,LS \le \alpha_T S \qquad \textbf{(Equation 16-41)}$$

where:

L = The span of the horizontal element in the direction of the tie, between bearing walls, feet (m).

w = The weight per unit area of the floor or roof in the span being tied to or across the wall, psf (N/m^2).

S = The spacing between ties, feet (m).

α_T = A coefficient with a value of 1,500 pounds per foot (2.25 kN/m) for masonry bearing wall structures and a value of 375 pounds per foot (0.6 kN/m) for structures with bearing walls of cold-formed steel light-frame construction.

1615.4.2.2 Transverse ties. Transverse ties shall consist of continuous reinforcement in slabs; continuous or spliced decks or sheathing; continuous or spliced members framing to, within or across walls; or connections of continuous framing members to walls. Transverse ties shall be placed no farther apart than the spacing of load-bearing walls. Transverse ties shall have minimum nominal tensile strength T_T, given by Equation 16-41. For ASD the minimum nominal tensile strength shall be permitted to be taken as 1.5 times the allowable tensile stress times the area of the tie.

1615.4.2.3 Perimeter ties. Perimeter ties shall consist of continuous reinforcement in slabs; continuous or spliced decks or sheathing; continuous or spliced members framing to, within or across walls; or connections of continuous framing members to walls. Ties around the perimeter of each floor and roof shall be located within 4 feet (1219 mm) of the edge and shall provide a nominal strength in tension not less than T_p, given by Equation 16-42. For ASD the minimum nominal tensile strength shall be permitted to be taken as 1.5 times the allowable tensile stress times the area of the tie.

$$T_p = 200w \le \beta_T \qquad \textbf{(Equation 16-42)}$$

For SI: $T_p = 90.7w \le \beta_T$

where:

w = As defined in Section 1615.4.2.1.

β_T = A coefficient with a value of 16,000 pounds (7200 kN) for structures with masonry bearing walls and a value of 4,000 pounds (1300 kN) for structures with bearing walls of cold-formed steel light-frame construction.

1615.4.2.4 Vertical ties. Vertical ties shall consist of continuous or spliced reinforcing, continuous or spliced members, wall sheathing or other engineered systems. Vertical tension ties shall be provided in bearing walls and shall be continuous over the height of the building. The minimum nominal tensile strength for vertical ties within a bearing wall shall be equal to the weight of the wall within that *story* plus the weight of the diaphragm tributary to the wall in the *story* below. No fewer than two ties shall be provided for each wall. The strength of each tie need not exceed 3,000 pounds per foot (450 kN/m) of wall tributary to the tie for walls of masonry construction or 750 pounds per foot (140 kN/m) of wall tributary to the tie for walls of cold-formed steel light-frame construction.

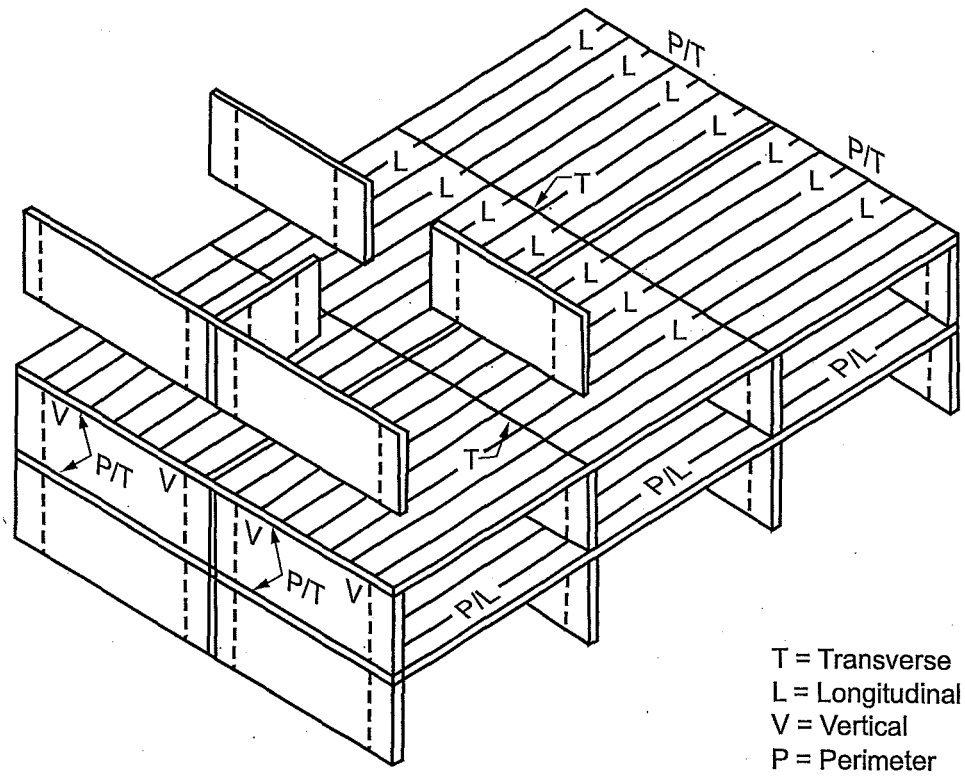

FIGURE 1615.4
LONGITUDINAL, PERIMETER, TRANSVERSE AND VERTICAL TIES

CHAPTER 17

SPECIAL INSPECTIONS AND TESTS

User note: Code change proposals to sections preceded by the designation [BF] will be considered by the IBC — Fire Safety Code Development Committee during the 2015 (Group A) Code Development Cycle. Sections preceded by the designation [F] will be considered by the International Fire Code Development Committee during the 2016 (Group B) Code Development Cycle. All other code change proposals will be considered by the IBC — Structural Code Development Committee during the Group B cycle. See explanation on page iv.

SECTION 1701 GENERAL

1701.1 Scope. The provisions of this chapter shall govern the quality, workmanship and requirements for materials covered. Materials of construction and tests shall conform to the applicable standards listed in this code.

1701.2 New materials. New building materials, equipment, appliances, systems or methods of construction not provided for in this code, and any material of questioned suitability proposed for use in the construction of a building or structure, shall be subjected to the tests prescribed in this chapter and in the *approved* rules to determine character, quality and limitations of use.

SECTION 1702 DEFINITIONS

1702.1 Definitions. The following terms are defined in Chapter 2:

APPROVED AGENCY.

APPROVED FABRICATOR.

CERTIFICATE OF COMPLIANCE.

DESIGNATED SEISMIC SYSTEM.

FABRICATED ITEM.

INTUMESCENT FIRE-RESISTANT COATINGS.

MAIN WINDFORCE-RESISTING SYSTEM.

MASTIC FIRE-RESISTANT COATINGS.

SPECIAL INSPECTION.

Continuous special inspection.

Periodic special inspection.

SPECIAL INSPECTOR.

SPRAYED FIRE-RESISTANT MATERIALS.

STRUCTURAL OBSERVATION.

SECTION 1703 APPROVALS

1703.1 Approved agency. An approved agency shall provide all information as necessary for the *building official* to determine that the agency meets the applicable requirements specified in Sections 1703.1.1 through 1703.1.3.

1703.1.1 Independence. An *approved agency* shall be objective, competent and independent from the contractor responsible for the work being inspected. The agency shall also disclose to the *building official* and the *registered design professional in responsible charge* possible conflicts of intere0st so that objectivity can be confirmed.

1703.1.2 Equipment. An *approved agency* shall have adequate equipment to perform required tests. The equipment shall be periodically calibrated.

1703.1.3 Personnel. An *approved agency* shall employ experienced personnel educated in conducting, supervising and evaluating tests and *special inspections*.

1703.2 Written approval. Any material, appliance, equipment, system or method of construction meeting the requirements of this code shall be *approved* in writing after satisfactory completion of the required tests and submission of required test reports.

1703.3 Record of approval. For any material, appliance, equipment, system or method of construction that has been *approved*, a record of such approval, including the conditions and limitations of the approval, shall be kept on file in the *building official's* office and shall be available for public review at appropriate times.

1703.4 Performance. Specific information consisting of test reports conducted by an *approved* agency in accordance with the appropriate referenced standards, or other such information as necessary, shall be provided for the *building official* to determine that the product, material or assembly meets the applicable code requirements.

1703.4.1 Research and investigation. Sufficient technical data shall be submitted to the *building official* to substantiate the proposed use of any product, material or assembly. If it is determined that the evidence submitted is satisfactory proof of performance for the use intended, the *building official* shall approve the use of the product, material or assembly subject to the requirements of this code. The costs, reports and investigations required under these provisions shall be paid by the owner or the owner's authorized agent.

1703.4.2 Research reports. Supporting data, where necessary to assist in the approval of products, materials or assemblies not specifically provided for in this code, shall consist of valid research reports from *approved* sources.

1703.5 Labeling. Products, materials or assemblies required to be *labeled* shall be *labeled* in accordance with the procedures set forth in Sections 1703.5.1 through 1703.5.4.

1703.5.1 Testing. An *approved agency* shall test a representative sample of the product, material or assembly being *labeled* to the relevant standard or standards. The *approved agency* shall maintain a record of the tests performed. The record shall provide sufficient detail to verify compliance with the test standard.

1703.5.2 Inspection and identification. The *approved agency* shall periodically perform an inspection, which shall be in-plant if necessary, of the product or material that is to be *labeled*. The inspection shall verify that the labeled product, material or assembly is representative of the product, material or assembly tested.

1703.5.3 Label information. The *label* shall contain the manufacturer's identification, model number, serial number or definitive information describing the performance characteristics of the product, material or assembly and the *approved agency's* identification.

1703.5.4 Method of labeling. Information required to be permanently identified on the product, material or assembly shall be acid etched, sand blasted, ceramic fired, laser etched, embossed or of a type that, once applied, cannot be removed without being destroyed.

1703.6 Evaluation and follow-up inspection services. Where structural components or other items regulated by this code are not visible for inspection after completion of a prefabricated assembly, the owner or the owner's authorized agent shall submit a report of each prefabricated assembly. The report shall indicate the complete details of the assembly, including a description of the assembly and its components, the basis upon which the assembly is being evaluated, test results and similar information and other data as necessary for the *building official* to determine conformance to this code. Such a report shall be *approved* by the *building official*.

1703.6.1 Follow-up inspection. The owner or the owner's authorized agent shall provide for *special inspections* of fabricated items in accordance with Section 1704.2.5.

1703.6.2 Test and inspection records. Copies of necessary test and *special inspection* records shall be filed with the building official.

SECTION 1704
SPECIAL INSPECTIONS AND TESTS, CONTRACTOR RESPONSIBILITY AND STRUCTURAL OBSERVATION

1704.1 General. Special inspections and tests, statements of special inspections, responsibilities of contractors, submittals to the *building official* and structural observations shall meet the applicable requirements of this section.

1704.2 Special inspections and tests. Where application is made to the *building official* for construction as specified in Section 105, the owner or the owner's authorized agent, other than the contractor, shall employ one or more *approved agencies* to provide *special inspections* and tests during construction on the types of work specified in Section 1705 and identify the *approved agencies* to the *building official*. These *special inspections* and tests are in addition to the inspections by the *building official* that are identified in Section 110.

Exceptions:

1. *Special inspections* and tests are not required for construction of a minor nature or as warranted by conditions in the jurisdiction as *approved* by the *building official*.
2. Unless otherwise required by the *building official*, *special inspections* and tests are not required for Group U occupancies that are accessory to a residential occupancy including, but not limited to, those listed in Section 312.1.
3. *Special inspections* and tests are not required for portions of structures designed and constructed in accordance with the cold-formed steel light-frame construction provisions of Section 2211.7 or the conventional light-frame construction provisions of Section 2308.
4. The contractor is permitted to employ the *approved agencies* where the contractor is also the owner.

1704.2.1 Special inspector qualifications. Prior to the start of the construction, the *approved agencies* shall provide written documentation to the *building official* demonstrating the competence and relevant experience or training of the *special inspectors* who will perform the *special inspections* and tests during construction. Experience or training shall be considered relevant where the documented experience or training is related in complexity to the same type of *special inspection* or testing activities for projects of similar complexity and material qualities. These qualifications are in addition to qualifications specified in other sections of this code.

The *registered design professional in responsible charge* and engineers of record involved in the design of the project are permitted to act as the *approved agency* and their personnel are permitted to act as special inspectors for the work designed by them, provided they qualify as special inspectors.

1704.2.2 Access for special inspection. The construction or work for which *special inspection* or testing is required shall remain accessible and exposed for *special inspection* or testing purposes until completion of the required *special inspections* or tests.

1704.2.3 Statement of special inspections. The applicant shall submit a statement of *special inspections* in accordance with Section 107.1 as a condition for permit issuance. This statement shall be in accordance with Section 1704.3.

Exception: A statement of *special inspections* is not required for portions of structures designed and constructed in accordance with the cold-formed steel light-frame construction provisions of Section 2211.7 or the conventional light-frame construction provisions of Section 2308.

1704.2.4 Report requirement. *Approved agencies* shall keep records of special inspections and tests. The *approved agency* shall submit reports of *special* inspections and tests to the *building official* and to the *registered design professional in responsible charge.* Reports shall indicate that work inspected or tested was or was not completed in conformance to *approved construction documents.* Discrepancies shall be brought to the immediate attention of the contractor for correction. If they are not corrected, the discrepancies shall be brought to the attention of the *building official* and to the *registered design professional in responsible charge* prior to the completion of that phase of the work. A final report documenting required *special inspections* and tests, and correction of any discrepancies noted in the inspections or tests, shall be submitted at a point in time agreed upon prior to the start of work by the owner or the owner's authorized agent to the *building official.*

1704.2.5 Special inspection of fabricated items. Where fabrication of structural, load-bearing or lateral load-resisting members or assemblies is being conducted on the premises of a fabricator's shop, *special inspections* of the *fabricated items* shall be performed during fabrication.

Exceptions:

1. *Special inspections* during fabrication are not required where the fabricator maintains *approved* detailed fabrication and quality control procedures that provide a basis for control of the workmanship and the fabricator's ability to conform to *approved construction documents* and this code. Approval shall be based upon review of fabrication and quality control procedures and periodic inspection of fabrication practices by the building official.
2. Special inspections are not required where the fabricator is registered and *approved* in accordance with Section 1704.2.5.1.

1704.2.5.1 Fabricator approval. *Special inspections* during fabrication are not required where the work is done on the premises of a fabricator registered and approved to perform such work without *special inspection.* Approval shall be based upon review of the fabricator's written procedural and quality control manuals and periodic auditing of fabrication practices by an *approved agency.* At completion of fabrication, the *approved* fabricator shall submit a *certificate of compliance* to the owner or the owner's authorized agent for submittal to the *building official* as specified in Section 1704.5 stating that the work was performed in accordance with the *approved construction documents.*

1704.3 Statement of special inspections. Where *special inspections* or tests are required by Section 1705, the *registered design professional in responsible charge* shall prepare a statement of *special inspections* in accordance with Section 1704.3.1 for submittal by the applicant in accordance with Section 1704.2.3.

Exception: The statement of *special inspections* is permitted to be prepared by a qualified person *approved* by the *building official* for construction not designed by a *registered design professional.*

1704.3.1 Content of statement of special inspections. The statement of *special inspections* shall identify the following:

1. The materials, systems, components and work required to have *special inspections* or tests by the *building official* or by the *registered design professional* responsible for each portion of the work.
2. The type and extent of each *special inspection.*
3. The type and extent of each test.
4. Additional requirements for *special inspections* or tests for seismic or wind resistance as specified in Sections 1705.11, 1705.12 and 1705.13.
5. For each type of *special inspection*, identification as to whether it will be continuous *special inspection*, periodic *special inspection* or performed in accordance with the notation used in the referenced standard where the inspections are defined.

1704.3.2 Seismic requirements in the statement of special inspections. Where Section 1705.12 or 1705.13 specifies *special inspections* or tests for seismic resistance, the statement of *special inspections* shall identify the designated seismic systems and seismic force-resisting systems that are subject to the *special inspections* or tests.

1704.3.3 Wind requirements in the statement of special inspections. Where Section 1705.11 specifies *special inspection* for wind resistance, the statement of *special inspections* shall identify the main windforce-resisting systems and wind-resisting components that are subject to *special inspections.*

1704.4 Contractor responsibility. Each contractor responsible for the construction of a main wind- or seismic force-resisting system, designated seismic system or a wind- or seismic force-resisting component listed in the statement of special inspections shall submit a written statement of responsibility to the *building official* and the owner or the owner's authorized agent prior to the commencement of work on the system or component. The contractor's statement of responsibility shall contain acknowledgement of awareness of the special requirements contained in the statement of *special inspections.*

1704.5 Submittals to the building official. In addition to the submittal of reports of *special inspections* and tests in accordance with Section 1704.2.4, reports and certificates shall be submitted by the owner or the owner's authorized agent to the *building official* for each of the following:

1. *Certificates of compliance* for the fabrication of structural, load-bearing or lateral load-resisting members or assemblies on the premises of a registered and *approved fabricator* in accordance with Section 1704.2.5.1.
2. *Certificates of compliance* for the seismic qualification of nonstructural components, supports and attachments in accordance with Section 1705.13.2.

3. *Certificates of compliance* for *designated seismic systems* in accordance with Section 1705.13.3.
4. Reports of preconstruction tests for shotcrete in accordance with Section 1908.5.
5. *Certificates of compliance* for open web steel joists and joist girders in accordance with Section 2207.5.
6. Reports of material properties verifying compliance with the requirements of AWS D1.4 for weldability as specified in Section 26.5.4 of ACI 318 for reinforcing bars in concrete complying with a standard other than ASTM A 706 that are to be welded; and
7. Reports of mill tests in accordance with Section 20.2.2.5 of ACI 318 for reinforcing bars complying with ASTM A 615 and used to resist earthquake-induced flexural or axial forces in the special moment frames, special structural walls or coupling beams connecting special structural walls of *seismic force-resisting systems* in *structures* assigned to *Seismic Design Category* B, C, D, E or F.

1704.6 Structural observations. Where required by the provisions of Section 1704.6.1 or 1704.6.2, the owner or the owner's authorized agent shall employ a *registered design professional* to perform structural observations. Structural observation does not include or waive the responsibility for the inspections in Section 110 or the *special inspections* in Section 1705 or other sections of this code.

Prior to the commencement of observations, the structural observer shall submit to the *building official* a written statement identifying the frequency and extent of structural observations.

At the conclusion of the work included in the permit, the structural observer shall submit to the *building official* a written statement that the site visits have been made and identify any reported deficiencies that, to the best of the structural observer's knowledge, have not been resolved.

1704.6.1 Structural observations for seismic resistance. Structural observations shall be provided for those structures assigned to *Seismic Design Category* D, E or F where one or more of the following conditions exist:

1. The structure is classified as *Risk Category* III or IV.
2. The height of the structure is greater than 75 feet (22 860 mm) above the base as defined in ASCE 7.
3. The structure is assigned to *Seismic Design Category* E, is classified as *Risk Category* I or II, and is greater than two *stories above grade plane*.
4. When so designated by the *registered design professional* responsible for the structural design.
5. When such observation is specifically required by the *building official*.

1704.6.2 Structural observations for wind requirements. Structural observations shall be provided for those structures sited where V_{asd} as determined in accordance with Section 1609.3.1 exceeds 110 mph (49 m/sec), where one or more of the following conditions exist:

1. The structure is classified as *Risk Category* III or IV.
2. The *building height* is greater than 75 feet (22 860 mm).
3. When so designated by the *registered design professional* responsible for the structural design.
4. When such observation is specifically required by the *building official*.

SECTION 1705
REQUIRED SPECIAL INSPECTIONS AND TESTS

1705.1 General. *Special inspections* and tests of elements and nonstructural components of buildings and structures shall meet the applicable requirements of this section.

1705.1.1 Special cases. *Special inspections* and tests shall be required for proposed work that is, in the opinion of the building official, unusual in its nature, such as, but not limited to, the following examples:

1. Construction materials and systems that are alternatives to materials and systems prescribed by this code.
2. Unusual design applications of materials described in this code.
3. Materials and systems required to be installed in accordance with additional manufacturer's instructions that prescribe requirements not contained in this code or in standards referenced by this code.

1705.2 Steel construction. The *special inspections* and nondestructive testing of steel construction in buildings, structures, and portions thereof shall be in accordance with this section.

Exception: *Special inspections* of the steel fabrication process shall not be required where the fabricator does not perform any welding, thermal cutting or heating operation of any kind as part of the fabrication process. In such cases, the fabricator shall be required to submit a detailed procedure for material control that demonstrates the fabricator's ability to maintain suitable records and procedures such that, at any time during the fabrication process, the material specification and grade for the main stress-carrying elements are capable of being determined. Mill test reports shall be identifiable to the main stress-carrying elements when required by the *approved construction documents*.

1705.2.1 Structural steel. *Special inspections* and nondestructive testing of *structural steel elements* in buildings, structures and portions thereof shall be in accordance with the quality assurance inspection requirements of AISC 360.

Exception: *Special inspection* of railing systems composed of *structural steel elements* shall be limited to welding inspection of welds at the base of cantilevered rail posts.

1705.2.2 Cold-formed steel deck. *Special inspections* and qualification of welding special inspectors for cold-formed

steel floor and roof deck shall be in accordance with the quality assurance inspection requirements of SDI QA/QC.

1705.2.3 Open-web steel joists and joist girders. *Special inspections* of open-web steel joists and joist girders in buildings, structures and portions thereof shall be in accordance with Table 1705.2.3.

1705.2.4 Cold-formed steel trusses spanning 60 feet or greater. Where a cold-formed steel truss clear span is 60 feet (18 288 mm) or greater, the special inspector shall verify that the temporary installation restraint/bracing and the permanent individual truss member restraint/bracing are installed in accordance with the *approved* truss submittal package.

1705.3 Concrete construction. *Special inspections* and tests of concrete construction shall be performed in accordance with this section and Table 1705.3.

Exception: *Special inspections* and tests shall not be required for:

1. Isolated spread concrete footings of buildings three stories or less above *grade plane* that are fully supported on earth or rock.
2. Continuous concrete footings supporting walls of buildings three stories or less above *grade plane* that are fully supported on earth or rock where:
   - 2.1. The footings support walls of light-frame construction.
   - 2.2. The footings are designed in accordance with Table 1809.7.
   - 2.3. The structural design of the footing is based on a specified compressive strength, f'_c, not more than 2,500 pounds per square inch (psi) (17.2 MPa), regardless of the compressive strength specified in the *approved construction documents* or used in the footing construction.
3. Nonstructural concrete slabs supported directly on the ground, including prestressed slabs on grade, where the effective prestress in the concrete is less than 150 psi (1.03 MPa).
4. Concrete foundation walls constructed in accordance with Table 1807.1.6.2.
5. Concrete patios, driveways and sidewalks, on grade.

1705.3.1 Welding of reinforcing bars. *Special inspections* of welding and qualifications of *special inspectors* for reinforcing bars shall be in accordance with the requirements of AWS D1.4 for *special inspection* and of AWS D1.4 for special inspector qualification.

1705.3.2 Material tests. In the absence of sufficient data or documentation providing evidence of conformance to quality standards for materials in Chapters 19 and 20 of ACI 318, the *building official* shall require testing of materials in accordance with the appropriate standards and criteria for the material in Chapters 19 and 20 of ACI 318.

1705.4 Masonry construction. *Special inspections* and tests of masonry construction shall be performed in accordance with the quality assurance program requirements of TMS 402/ACI 530/ASCE 5 and TMS 602/ACI 530.1/ASCE 6.

Exception: *Special inspections* and tests shall not be required for:

1. Empirically designed masonry, glass unit masonry or masonry veneer designed in accordance with Section 2109, 2110 or Chapter 14, respectively, where they are part of a structure classified as *Risk Category* I, II or III.
2. Masonry foundation walls constructed in accordance with Table 1807.1.6.3(1), 1807.1.6.3(2), 1807.1.6.3(3) or 1807.1.6.3(4).
3. Masonry fireplaces, masonry heaters or masonry chimneys installed or constructed in accordance with Section 2111, 2112 or 2113, respectively.

1705.4.1 Empirically designed masonry, glass unit masonry and masonry veneer in Risk Category IV. *Special inspections* and tests for empirically designed masonry, glass unit masonry or masonry veneer designed in accordance with Section 2109, 2110 or Chapter 14, respectively, where they are part of a structure classified as *Risk Category* IV shall be performed in accordance with TMS 402/ACI 530/ASCE 5, Level B Quality Assurance.

TABLE 1705.2.3
REQUIRED SPECIAL INSPECTIONS OF OPEN-WEB STEEL JOISTS AND JOIST GIRDERS

TYPE	CONTINUOUS SPECIAL INSPECTION	PERIODIC SPECIAL INSPECTION	REFERENCED STANDARD[a]
1. Installation of open-web steel joists and joist girders.			
a. End connections – welding or bolted.	—	X	SJI specifications listed in Section 2207.1.
b. Bridging – horizontal or diagonal.	—		
1. Standard bridging.	—	X	SJI specifications listed in Section 2207.1.
2. Bridging that differs from the SJI specifications listed in Section 2207.1.		X	

For SI: 1 inch = 25.4 mm.

a. Where applicable, see also Section 1705.12, Special inspections for seismic resistance.

TABLE 1705.3
REQUIRED SPECIAL INSPECTIONS AND TESTS OF CONCRETE CONSTRUCTION

TYPE	CONTINUOUS SPECIAL INSPECTION	PERIODIC SPECIAL INSPECTION	REFERENCED STANDARD[a]	IBC REFERENCE
1. Inspect reinforcement, including prestressing tendons, and verify placement.	—	X	ACI 318 Ch. 20, 25.2, 25.3, 26.5.1-26.5.3	1908.4
2. Reinforcing bar welding: a. Verify weldability of reinforcing bars other than ASTM A 706; b. Inspect single-pass fillet welds, maximum $^5/_{16}$"; and c. Inspect all other welds.	— X	X X	AWS D1.4 ACI 318: 26.5.4	—
3. Inspect anchors cast in concrete.	—	X	ACI 318: 17.8.2	—
4. Inspect anchors post-installed in hardened concrete members.[b] a. Adhesive anchors installed in horizontally or upwardly inclined orientations to resist sustained tension loads. b. Mechanical anchors and adhesive anchors not defined in 4.a.	X	X	ACI 318: 17.8.2.4 ACI 318: 17.8.2	—
5. Verify use of required design mix.	—	X	ACI 318: Ch. 19, 26.4.3, 26.4.4	1904.1, 1904.2, 1908.2, 1908.3
6. Prior to concrete placement, fabricate specimens for strength tests, perform slump and air content tests, and determine the temperature of the concrete.	X	—	ASTM C 172 ASTM C 31 ACI 318: 26.4.5, 26.12	1908.10
7. Inspect concrete and shotcrete placement for proper application techniques.	X	—	ACI 318: 26.4.5	1908.6, 1908.7, 1908.8
8. Verify maintenance of specified curing temperature and techniques.	—	X	ACI 318: 26.4.7-26.4.9	1908.9
9. Inspect prestressed concrete for: a. Application of prestressing forces; and b. Grouting of bonded prestressing tendons.	 X X	 — —	 ACI 318: 26.9.2.1 ACI 318: 26.9.2.3	—
10. Inspect erection of precast concrete members.	—	X	ACI 318: Ch. 26.8	—
11. Verify in-situ concrete strength, prior to stressing of tendons in post-tensioned concrete and prior to removal of shores and forms from beams and structural slabs.	—	X	ACI 318: 26.10.2	—
12. Inspect formwork for shape, location and dimensions of the concrete member being formed.	—	X	ACI 318: 26.10.1(b)	—

For SI: 1 inch = 25.4 mm.

a. Where applicable, see also Section 1705.12, Special inspections for seismic resistance.

b. Specific requirements for special inspection shall be included in the research report for the anchor issued by an approved source in accordance with 17.8.2 in ACI 318, or other qualification procedures. Where specific requirements are not provided, special inspection requirements shall be specified by the registered design professional and shall be approved by the building official prior to the commencement of the work.

1705.4.2 Vertical masonry foundation elements. *Special inspections* and tests of *vertical masonry foundation elements* shall be performed in accordance with Section 1705.4.

1705.5 Wood construction. *Special inspections* of prefabricated wood structural elements and assemblies shall be in accordance with Section 1704.2.5. *Special inspections* of site-built assemblies shall be in accordance with this section.

1705.5.1 High-load diaphragms. High-load diaphragms designed in accordance with Section 2306.2 shall be installed with *special inspections* as indicated in Section 1704.2. The special inspector shall inspect the wood structural panel sheathing to ascertain whether it is of the grade and thickness shown on the *approved construction documents*. Additionally, the special inspector must verify the nominal size of framing members at adjoining panel edges, the nail or staple diameter and length, the number of fastener lines and that the spacing between fasteners in each line and at edge margins agrees with the *approved construction documents*.

1705.5.2 Metal-plate-connected wood trusses spanning 60 feet or greater. Where a truss clear span is 60 feet (18 288 mm) or greater, the special inspector shall verify that the temporary installation restraint/bracing and the permanent individual truss member restraint/bracing are installed in accordance with the approved truss submittal package.

1705.6 Soils. *Special inspections* and tests of existing site soil conditions, fill placement and load-bearing requirements shall be performed in accordance with this section and Table 1705.6. The *approved* geotechnical report and the *construction documents* prepared by the *registered design professionals* shall be used to determine compliance. During fill placement, the special inspector shall verify that proper materials and procedures are used in accordance with the provisions of the *approved* geotechnical report.

Exception: Where Section 1803 does not require reporting of materials and procedures for fill placement, the special inspector shall verify that the in-place dry density of the compacted fill is not less than 90 percent of the maximum dry density at optimum moisture content determined in accordance with ASTM D 1557.

1705.7 Driven deep foundations. *Special inspections* and tests shall be performed during installation of driven deep foundation elements as specified in Table 1705.7. The approved geotechnical report and the *construction documents* prepared by the *registered design professionals* shall be used to determine compliance.

TABLE 1705.6
REQUIRED SPECIAL INSPECTIONS AND TESTS OF SOILS

TYPE	CONTINUOUS SPECIAL INSPECTION	PERIODIC SPECIAL INSPECTION
1. Verify materials below shallow foundations are adequate to achieve the design bearing capacity.	—	X
2. Verify excavations are extended to proper depth and have reached proper material.	—	X
3. Perform classification and testing of compacted fill materials.	—	X
4. Verify use of proper materials, densities and lift thicknesses during placement and compaction of compacted fill.	X	—
5. Prior to placement of compacted fill, inspect subgrade and verify that site has been prepared properly.	—	X

TABLE 1705.7
REQUIRED SPECIAL INSPECTIONS AND TESTS OF DRIVEN DEEP FOUNDATION ELEMENTS

TYPE	CONTINUOUS SPECIAL INSPECTION	PERIODIC SPECIAL INSPECTION
1. Verify element materials, sizes and lengths comply with the requirements.	X	—
2. Determine capacities of test elements and conduct additional load tests, as required.	X	—
3. Inspect driving operations and maintain complete and accurate records for each element.	X	—
4. Verify placement locations and plumbness, confirm type and size of hammer, record number of blows per foot of penetration, determine required penetrations to achieve design capacity, record tip and butt elevations and document any damage to foundation element.	X	—
5. For steel elements, perform additional special inspections in accordance with Section 1705.2.	—	—
6. For concrete elements and concrete-filled elements, perform tests and additional special inspections in accordance with Section 1705.3.	—	—
7. For specialty elements, perform additional inspections as determined by the registered design professional in responsible charge.	—	—

1705.8 Cast-in-place deep foundations. *Special inspections* and tests shall be performed during installation of cast-in-place deep foundation elements as specified in Table 1705.8. The *approved* geotechnical report and the *construction documents* prepared by the *registered design professionals* shall be used to determine compliance.

1705.9 Helical pile foundations. *Continuous special inspections* shall be performed during installation of helical pile foundations. The information recorded shall include installation equipment used, pile dimensions, tip elevations, final depth, final installation torque and other pertinent installation data as required by the *registered design professional in responsible charge*. The *approved* geotechnical report and the *construction documents* prepared by the *registered design professional* shall be used to determine compliance.

1705.10 Fabricated items. *Special inspections* of *fabricated items* shall be performed in accordance with Section 1704.2.5.

1705.11 Special inspections for wind resistance. *Special inspections* for wind resistance specified in Sections 1705.11.1 through 1705.11.3, unless exempted by the exceptions to Section 1704.2, are required for buildings and structures constructed in the following areas:

1. In wind Exposure Category B, where V_{asd} as determined in accordance with Section 1609.3.1 is 120 miles per hour (52.8 m/sec) or greater.
2. In wind Exposure Category C or D, where V_{asd} as determined in accordance with Section 1609.3.1 is 110 mph (49 m/sec) or greater.

1705.11.1 Structural wood. *Continuous special inspection* is required during field gluing operations of elements of the main windforce-resisting system. *Periodic special inspection* is required for nailing, bolting, anchoring and other fastening of elements of the main windforce-resisting system, including wood shear walls, wood diaphragms, drag struts, braces and hold-downs.

Exception: *Special inspections* are not required for wood shear walls, shear panels and diaphragms, including nailing, bolting, anchoring and other fastening to other elements of the main windforce-resisting system, where the fastener spacing of the sheathing is more than 4 inches (102 mm) on center.

1705.11.2 Cold-formed steel light-frame construction. *Periodic special inspection* is required for welding operations of elements of the main windforce-resisting system. *Periodic special inspection* is required for screw attachment, bolting, anchoring and other fastening of elements of the main windforce-resisting system, including shear walls, braces, diaphragms, collectors (drag struts) and hold-downs.

Exception: *Special inspections* are not required for cold-formed steel light-frame shear walls and diaphragms, including screwing, bolting, anchoring and other fastening to components of the windforce resisting system, where either of the following applies:

1. The sheathing is gypsum board or fiberboard.
2. The sheathing is wood structural panel or steel sheets on only one side of the shear wall, shear panel or diaphragm assembly and the fastener spacing of the sheathing is more than 4 inches (102 mm) on center (o.c.).

1705.11.3 Wind-resisting components. *Periodic special inspection* is required for fastening of the following systems and components:

1. Roof covering, roof deck and roof framing connections.
2. Exterior wall covering and wall connections to roof and floor diaphragms and framing.

1705.12 Special inspections for seismic resistance. *Special inspections* for seismic resistance shall be required as specified in Sections 1705.12.1 through 1705.12.9, unless exempted by the exceptions of Section 1704.2.

Exception: The *special inspections* specified in Sections 1705.12.1 through 1705.12.9 are not required for structures designed and constructed in accordance with one of the following:

1. The structure consists of light-frame construction; the design spectral response acceleration at short periods, S_{DS}, as determined in Section 1613.3.4, does not exceed 0.5; and the *building height* of the structure does not exceed 35 feet (10 668 mm).
2. The seismic force-resisting system of the structure consists of reinforced masonry or reinforced concrete; the design spectral response acceleration at short periods, S_{DS}, as determined in Section 1613.3.4, does not exceed 0.5; and the *building height* of the structure does not exceed 25 feet (7620 mm).

TABLE 1705.8
REQUIRED SPECIAL INSPECTIONS AND TESTS OF CAST-IN-PLACE DEEP FOUNDATION ELEMENTS

TYPE	CONTINUOUS SPECIAL INSPECTION	PERIODIC SPECIAL INSPECTION
1. Inspect drilling operations and maintain complete and accurate records for each element.	X	—
2. Verify placement locations and plumbness, confirm element diameters, bell diameters (if applicable), lengths, embedment into bedrock (if applicable) and adequate end-bearing strata capacity. Record concrete or grout volumes.	X	—
3. For concrete elements, perform tests and additional special inspections in accordance with Section 1705.3.	—	—

3. The structure is a detached one- or two-family dwelling not exceeding two *stories above grade plane* and does not have any of the following horizontal or vertical irregularities in accordance with Section 12.3 of ASCE 7:
   3.1. Torsional or extreme torsional irregularity.
   3.2. Nonparallel systems irregularity.
   3.3. Stiffness-soft story or stiffness-extreme soft story irregularity.
   3.4. Discontinuity in lateral strength-weak story irregularity.

1705.12.1 Structural steel. *Special inspections* for seismic resistance shall be in accordance with Section 1705.12.1.1 or 1705.12.1.2, as applicable.

1705.12.1.1 Seismic force-resisting systems. *Special inspections* of structural steel in the seismic force-resisting systems of buildings and structures assigned to *Seismic Design Category* B, C, D, E or F shall be performed in accordance with the quality assurance requirements of AISC 341.

Exception: *Special inspections* are not required in the seismic force-resisting systems of buildings and structures assigned to *Seismic Design Category* B or C that are not specifically detailed for seismic resistance, with a response modification coefficient, *R*, of 3 or less, excluding cantilever column systems.

1705.12.1.2 Structural steel elements. *Special inspections* of *structural steel elements* in the seismic force-resisting systems of buildings and structures assigned to *Seismic Design Category* B, C, D, E or F other than those covered in Section 1705.12.1.1, including struts, collectors, chords and foundation elements, shall be performed in accordance with the quality assurance requirements of AISC 341.

Exception: *Special inspections* of *structural steel elements* are not required in the seismic force-resisting systems of buildings and structures assigned to *Seismic Design Category* B or C with a response modification coefficient, *R*, of 3 or less.

1705.12.2 Structural wood. For the seismic force-resisting systems of structures assigned to *Seismic Design Category* C, D, E or F:

1. *Continuous special inspection* shall be required during field gluing operations of elements of the seismic force-resisting system.
2. *Periodic special inspection* shall be required for nailing, bolting, anchoring and other fastening of elements of the seismic force-resisting system, including wood shear walls, wood diaphragms, drag struts, braces, shear panels and hold-downs.

Exception: *Special inspections* are not required for wood shear walls, shear panels and diaphragms, including nailing, bolting, anchoring and other fastening to other elements of the seismic force-resisting system, where the fastener spacing of the sheathing is more than 4 inches (102 mm) on center.

1705.12.3 Cold-formed steel light-frame construction. For the seismic force-resisting systems of structures assigned to *Seismic Design Category* C, D, E or F, periodic special inspection shall be required:

1. For welding operations of elements of the seismic force-resisting system; and
2. For screw attachment, bolting, anchoring and other fastening of elements of the seismic force-resisting system, including shear walls, braces, diaphragms, collectors (drag struts) and hold-downs.

Exception: *Special inspections* are not required for cold-formed steel light-frame shear walls and diaphragms, including screw installation, bolting, anchoring and other fastening to components of the seismic force-resisting system, where either of the following applies:

1. The sheathing is gypsum board or fiberboard.
2. The sheathing is wood structural panel or steel sheets on only one side of the shear wall, shear panel or diaphragm assembly and the fastener spacing of the sheathing is more than 4 inches (102 mm) on center.

1705.12.4 Designated seismic systems. For structures assigned to *Seismic Design Category* C, D, E or F, the special inspector shall examine *designated seismic systems* requiring seismic qualification in accordance with Section 13.2.2 of ASCE 7 and verify that the label, anchorage and mounting conform to the *certificate of compliance*.

1705.12.5 Architectural components. *Periodic special inspection* is required for the erection and fastening of exterior cladding, interior and exterior nonbearing walls and interior and exterior veneer in structures assigned to *Seismic Design Category* D, E or F.

Exception: *Periodic special inspection* is not required for the following:

1. Exterior cladding, interior and exterior nonbearing walls and interior and exterior veneer 30 feet (9144 mm) or less in height above grade or walking surface.
2. Exterior cladding and interior and exterior veneer weighing 5 psf (24.5 N/m^2) or less.
3. Interior nonbearing walls weighing 15 psf (73.5 N/m^2) or less.

1705.12.5.1 Access floors. Periodic *special inspection* is required for the anchorage of access floors in structures assigned to *Seismic Design Category* D, E or F.

1705.12.6 Plumbing, mechanical and electrical components. *Periodic special inspection* of plumbing, mechanical and electrical components shall be required for the following:

1. Anchorage of electrical equipment for emergency and standby power systems in structures assigned to *Seismic Design Category* C, D, E or F.
2. Anchorage of other electrical equipment in structures assigned to *Seismic Design Category* E or F.

3. Installation and anchorage of piping systems designed to carry hazardous materials and their associated mechanical units in structures assigned to *Seismic Design Category* C, D, E or F.
4. Installation and anchorage of ductwork designed to carry hazardous materials in structures assigned to *Seismic Design Category* C, D, E or F.
5. Installation and anchorage of vibration isolation systems in structures assigned to *Seismic Design Category* C, D, E or F where the *approved construction documents* require a nominal clearance of $^1/_4$ inch (6.4 mm) or less between the equipment support frame and restraint.

1705.12.7 Storage racks. *Periodic special inspection* is required for the anchorage of storage racks that are 8 feet (2438 mm) or greater in height in structures assigned to *Seismic Design Category* D, E or F.

1705.12.8 Seismic isolation systems. *Periodic special inspection* shall be provided for seismic isolation systems in seismically isolated structures assigned to *Seismic Design Category* B, C, D, E or F during the fabrication and installation of isolator units and energy dissipation devices.

1705.12.9 Cold-formed steel special bolted moment frames. *Periodic special inspection* shall be provided for the installation of cold-formed steel special bolted moment frames in the *seismic force-resisting systems* of structures assigned to *Seismic Design Category* D, E or F.

1705.13 Testing for seismic resistance. Testing for seismic resistance shall be required as specified in Sections 1705.13.1 through 1705.13.4, unless exempted from *special inspections* by the exceptions of Section 1704.2.

1705.13.1 Structural steel. Nondestructive testing for seismic resistance shall be in accordance with Section 1705.13.1.1 or 1705.13.1.2, as applicable.

1705.13.1.1 Seismic force-resisting systems. Nondestructive testing of structural steel in the seismic force-resisting systems of buildings and structures assigned to *Seismic Design Category* B, C, D, E or F shall be performed in accordance with the quality assurance requirements of AISC 341.

Exception: Nondestructive testing is not required in the seismic force-resisting systems of buildings and structures assigned to *Seismic Design Category* B or C that are not specifically detailed for seismic resistance, with a response modification coefficient, *R*, of 3 or less, excluding cantilever column systems.

1705.13.1.2 Structural steel elements. Nondestructive testing of structural steel elements in the seismic force-resisting systems of buildings and structures assigned to *Seismic Design Category* B, C, D, E or F other than those covered in Section 1705.13.1.1, including struts, collectors, chords and foundation elements, shall be performed in accordance with the quality assurance requirements of AISC 341.

Exception: Nondestructive testing of *structural steel elements* is not required in the seismic force-resisting systems of buildings and structures assigned to *Seismic Design Category* B or C with a response modification coefficient, *R*, of 3 or less.

1705.13.2 Nonstructural components. For structures assigned to *Seismic Design Category* B, C, D, E or F, where the requirements of Section 13.2.1 of ASCE 7 for nonstructural components, supports or attachments are met by seismic qualification as specified in Item 2 therein, the *registered design professional* shall specify on the *approved construction documents* the requirements for seismic qualification by analysis, testing or experience data. *Certificates of compliance* for the seismic qualification shall be submitted to the *building official* as specified in Section 1704.5.

1705.13.3 Designated seismic systems. For structures assigned to *Seismic Design Category* C, D, E or F and with *designated seismic systems* that are subject to the requirements of Section 13.2.2 of ASCE 7 for certification, the *registered design professional* shall specify on the *approved construction documents* the requirements to be met by analysis, testing or experience data as specified therein. *Certificates of compliance* documenting that the requirements are met shall be submitted to the *building official* as specified in Section 1704.5.

1705.13.4 Seismic isolation systems. Seismic isolation systems in seismically isolated structures assigned to *Seismic Design Category* B, C, D, E or F shall be tested in accordance with Section 17.8 of ASCE 7.

[BF] 1705.14 Sprayed fire-resistant materials. *Special inspections* and tests of sprayed fire-resistant materials applied to floor, roof and wall assemblies and structural members shall be performed in accordance with Sections 1705.14.1 through 1705.14.6. *Special inspections* shall be based on the fire-resistance design as designated in the *approved construction documents*. The tests set forth in this section shall be based on samplings from specific floor, roof and wall assemblies and structural members. *Special inspections* and tests shall be performed after the rough installation of electrical, automatic sprinkler, mechanical and plumbing systems and suspension systems for ceilings, where applicable.

[BF] 1705.14.1 Physical and visual tests. The *special inspections* and tests shall include the following to demonstrate compliance with the listing and the *fire-resistance rating*:

1. Condition of substrates.
2. Thickness of application.
3. Density in pounds per cubic foot (kg/m^3).
4. Bond strength adhesion/cohesion.
5. Condition of finished application.

[BF] 1705.14.2 Structural member surface conditions. The surfaces shall be prepared in accordance with the *approved* fire-resistance design and the written instructions of *approved* manufacturers. The prepared surface of structural members to be sprayed shall be inspected by the special inspector before the application of the sprayed fire-resistant material.

[BF] 1705.14.3 Application. The substrate shall have a minimum ambient temperature before and after application as specified in the written instructions of *approved* manufacturers. The area for application shall be ventilated during and after application as required by the written instructions of *approved* manufacturers.

[BF] 1705.14.4 Thickness. No more than 10 percent of the thickness measurements of the sprayed fire-resistant materials applied to floor, roof and wall assemblies and structural members shall be less than the thickness required by the *approved* fire-resistance design, but in no case less than the minimum allowable thickness required by Section 1705.14.4.1.

[BF] 1705.14.4.1 Minimum allowable thickness. For design thicknesses 1 inch (25 mm) or greater, the minimum allowable individual thickness shall be the design thickness minus $^1/_4$ inch (6.4 mm). For design thicknesses less than 1 inch (25 mm), the minimum allowable individual thickness shall be the design thickness minus 25 percent. Thickness shall be determined in accordance with ASTM E 605. Samples of the sprayed fire-resistant materials shall be selected in accordance with Sections 1705.14.4.2 and 1705.14.4.3.

[BF] 1705.14.4.2 Floor, roof and wall assemblies. The thickness of the sprayed fire-resistant material applied to floor, roof and wall assemblies shall be determined in accordance with ASTM E 605, making not less than four measurements for each 1,000 square feet (93 m^2) of the sprayed area, or portion thereof, in each *story*.

[BF] 1705.14.4.3 Cellular decks. Thickness measurements shall be selected from a square area, 12 inches by 12 inches (305 mm by 305 mm) in size. A minimum of four measurements shall be made, located symmetrically within the square area.

[BF] 1705.14.4.4 Fluted decks. Thickness measurements shall be selected from a square area, 12 inches by 12 inches (305 mm by 305 mm) in size. A minimum of four measurements shall be made, located symmetrically within the square area, including one each of the following: valley, crest and sides. The average of the measurements shall be reported.

[BF] 1705.14.4.5 Structural members. The thickness of the sprayed fire-resistant material applied to structural members shall be determined in accordance with ASTM E 605. Thickness testing shall be performed on not less than 25 percent of the structural members on each floor.

[BF] 1705.14.4.6 Beams and girders. At beams and girders thickness measurements shall be made at nine locations around the beam or girder at each end of a 12-inch (305 mm) length.

[BF] 1705.14.4.7 Joists and trusses. At joists and trusses, thickness measurements shall be made at seven locations around the joist or truss at each end of a 12-inch (305 mm) length.

[BF] 1705.14.4.8 Wide-flanged columns. At wide-flanged columns, thickness measurements shall be made at 12 locations around the column at each end of a 12-inch (305 mm) length.

[BF] 1705.14.4.9 Hollow structural section and pipe columns. At hollow structural section and pipe columns, thickness measurements shall be made at a minimum of four locations around the column at each end of a 12-inch (305 mm) length.

[BF] 1705.14.5 Density. The density of the sprayed fire-resistant material shall not be less than the density specified in the *approved* fire-resistance design. Density of the sprayed fire-resistant material shall be determined in accordance with ASTM E 605. The test samples for determining the density of the sprayed fire-resistant materials shall be selected as follows:

1. From each floor, roof and wall assembly at the rate of not less than one sample for every 2,500 square feet (232 m^2) or portion thereof of the sprayed area in each *story*.
2. From beams, girders, trusses and columns at the rate of not less than one sample for each type of structural member for each 2,500 square feet (232 m^2) of floor area or portion thereof in each *story*.

[BF] 1705.14.6 Bond strength. The cohesive/adhesive bond strength of the cured sprayed fire-resistant material applied to floor, roof and wall assemblies and structural members shall not be less than 150 pounds per square foot (psf) (7.18 kN/m^2). The cohesive/adhesive bond strength shall be determined in accordance with the field test specified in ASTM E 736 by testing in-place samples of the sprayed fire-resistant material selected in accordance with Sections 1705.14.6.1 through 1705.14.6.3.

[BF] 1705.14.6.1 Floor, roof and wall assemblies. The test samples for determining the cohesive/adhesive bond strength of the sprayed fire-resistant materials shall be selected from each floor, roof and wall assembly at the rate of not less than one sample for every 2,500 square feet (232 m^2) of the sprayed area, or portion thereof, in each *story*.

[BF] 1705.14.6.2 Structural members. The test samples for determining the cohesive/adhesive bond strength of the sprayed fire-resistant materials shall be selected from beams, girders, trusses, columns and other structural members at the rate of not less than one sample for each type of structural member for each 2,500 square feet (232 m^2) of floor area or portion thereof in each *story*.

[BF] 1705.14.6.3 Primer, paint and encapsulant bond tests. Bond tests to qualify a primer, paint or

encapsulant shall be conducted when the sprayed fire-resistant material is applied to a primed, painted or encapsulated surface for which acceptable bond-strength performance between these coatings and the fire-resistant material has not been determined. A bonding agent *approved* by the SFRM manufacturer shall be applied to a primed, painted or encapsulated surface where the bond strengths are found to be less than required values.

[BF] 1705.15 Mastic and intumescent fire-resistant coatings. *Special inspections* and tests for mastic and intumescent fire-resistant coatings applied to structural elements and decks shall be performed in accordance with AWCI 12-B. *Special inspections* and tests shall be based on the fire-resistance design as designated in the *approved construction documents.*

1705.16 Exterior insulation and finish systems (EIFS). *Special inspections* shall be required for all EIFS applications.

Exceptions:

1. *Special inspections* shall not be required for EIFS applications installed over a *water-resistive barrier* with a means of draining moisture to the exterior.
2. *Special inspections* shall not be required for EIFS applications installed over masonry or concrete walls.

1705.16.1 Water-resistive barrier coating. A *water-resistive barrier* coating complying with ASTM E 2570 requires *special inspection* of the *water-resistive barrier* coating when installed over a sheathing substrate.

[BF] 1705.17 Fire-resistant penetrations and joints. In *high-rise buildings* or in buildings assigned to *Risk Category* III or IV, *special inspections* for *through-penetrations*, membrane penetration firestops, *fire-resistant joint systems* and perimeter fire barrier systems that are tested and *listed* in accordance with Sections 714.3.1.2, 714.4.2, 715.3 and 715.4 shall be in accordance with Section 1705.17.1 or 1705.17.2.

[BF] 1705.17.1 Penetration firestops. Inspections of penetration firestop systems that are tested and *listed* in accordance with Sections 714.3.1.2 and 714.4.2 shall be conducted by an *approved agency* in accordance with ASTM E 2174.

[BF] 1705.17.2 Fire-resistant joint systems. Inspection of fire-resistant joint systems that are tested and *listed* in accordance with Sections 715.3 and 715.4 shall be conducted by an *approved agency* in accordance with ASTM E 2393.

[F] 1705.18 Testing for smoke control. Smoke control systems shall be tested by a special inspector.

[F] 1705.18.1 Testing scope. The test scope shall be as follows:

1. During erection of ductwork and prior to concealment for the purposes of leakage testing and recording of device location.
2. Prior to occupancy and after sufficient completion for the purposes of pressure difference testing, flow measurements and detection and control verification.

[F] 1705.18.2 Qualifications. *Approved agencies* for smoke control testing shall have expertise in fire protection engineering, mechanical engineering and certification as air balancers.

SECTION 1706
DESIGN STRENGTHS OF MATERIALS

1706.1 Conformance to standards. The design strengths and permissible stresses of any structural material that are identified by a manufacturer's designation as to manufacture and grade by mill tests, or the strength and stress grade is otherwise confirmed to the satisfaction of the *building official*, shall conform to the specifications and methods of design of accepted engineering practice or the *approved* rules in the absence of applicable standards.

1706.2 New materials. For materials that are not specifically provided for in this code, the design strengths and permissible stresses shall be established by tests as provided for in Section 1707.

SECTION 1707
ALTERNATIVE TEST PROCEDURE

1707.1 General. In the absence of *approved* rules or other *approved* standards, the *building official* shall make, or cause to be made, the necessary tests and investigations; or the *building official* shall accept duly authenticated reports from *approved agencies* in respect to the quality and manner of use of new materials or assemblies as provided for in Section 104.11. The cost of all tests and other investigations required under the provisions of this code shall be borne by the owner or the owner's authorized agent.

SECTION 1708
IN-SITU LOAD TESTS

1708.1 General. Whenever there is a reasonable doubt as to the stability or load-bearing capacity of a completed building, structure or portion thereof for the expected loads, an engineering assessment shall be required. The engineering assessment shall involve either a structural analysis or an in-situ load test, or both. The structural analysis shall be based on actual material properties and other as-built conditions that affect stability or load-bearing capacity, and shall be conducted in accordance with the applicable design standard. If the structural assessment determines that the load-bearing capacity is less than that required by the code, load tests shall be conducted in accordance with Section 1708.2. If the building, structure or portion thereof is found to have inadequate stability or load-bearing capacity for the expected loads, modifications to ensure structural adequacy or the removal of the inadequate construction shall be required.

1708.2 Test standards. Structural components and assemblies shall be tested in accordance with the appropriate refer-

enced standards. In the absence of a standard that contains an applicable load test procedure, the test procedure shall be developed by a *registered design professional* and *approved.* The test procedure shall simulate loads and conditions of application that the completed structure or portion thereof will be subjected to in normal use.

1708.3 In-situ load tests. In-situ load tests shall be conducted in accordance with Section 1708.3.1 or 1708.3.2 and shall be supervised by a *registered design professional.* The test shall simulate the applicable loading conditions specified in Chapter 16 as necessary to address the concerns regarding structural stability of the building, structure or portion thereof.

1708.3.1 Load test procedure specified. Where a referenced standard contains an applicable load test procedure and acceptance criteria, the test procedure and acceptance criteria in the standard shall apply. In the absence of specific load factors or acceptance criteria, the load factors and acceptance criteria in Section 1708.3.2 shall apply.

1708.3.2 Load test procedure not specified. In the absence of applicable load test procedures contained within a standard referenced by this code or acceptance criteria for a specific material or method of construction, such *existing structure* shall be subjected to a test procedure developed by a *registered design professional* that simulates applicable loading and deformation conditions. For components that are not a part of the seismic force-resisting system, at a minimum the test load shall be equal to the specified factored design loads. For materials such as wood that have strengths that are dependent on load duration, the test load shall be adjusted to account for the difference in load duration of the test compared to the expected duration of the design loads being considered. For statically loaded components, the test load shall be left in place for a period of 24 hours. For components that carry dynamic loads (e.g., machine supports or fall arrest anchors), the load shall be left in place for a period consistent with the component's actual function. The structure shall be considered to have successfully met the test requirements where the following criteria are satisfied:

1. Under the design load, the deflection shall not exceed the limitations specified in Section 1604.3.
2. Within 24 hours after removal of the test load, the structure shall have recovered not less than 75 percent of the maximum deflection.
3. During and immediately after the test, the structure shall not show evidence of failure.

SECTION 1709
PRECONSTRUCTION LOAD TESTS

1709.1 General. Where proposed construction is not capable of being designed by *approved* engineering analysis, or where proposed construction design method does not comply with the applicable material design standard, the system of construction or the structural unit and the connections shall be subjected to the tests prescribed in Section 1709. The *building official* shall accept certified reports of such tests conducted by an *approved* testing agency, provided that such tests meet the requirements of this code and *approved* procedures.

1709.2 Load test procedures specified. Where specific load test procedures, load factors and acceptance criteria are included in the applicable referenced standards, such test procedures, load factors and acceptance criteria shall apply. In the absence of specific test procedures, load factors or acceptance criteria, the corresponding provisions in Section 1709.3 shall apply.

1709.3 Load test procedures not specified. Where load test procedures are not specified in the applicable referenced standards, the load-bearing and deformation capacity of structural components and assemblies shall be determined on the basis of a test procedure developed by a *registered design professional* that simulates applicable loading and deformation conditions. For components and assemblies that are not a part of the seismic force-resisting system, the test shall be as specified in Section 1709.3.1. Load tests shall simulate the applicable loading conditions specified in Chapter 16.

1709.3.1 Test procedure. The test assembly shall be subjected to an increasing superimposed load equal to not less than two times the superimposed design load. The test load shall be left in place for a period of 24 hours. The tested assembly shall be considered to have successfully met the test requirements if the assembly recovers not less than 75 percent of the maximum deflection within 24 hours after the removal of the test load. The test assembly shall then be reloaded and subjected to an increasing superimposed load until either structural failure occurs or the superimposed load is equal to two and one-half times the load at which the deflection limitations specified in Section 1709.3.2 were reached, or the load is equal to two and one-half times the superimposed design load. In the case of structural components and assemblies for which deflection limitations are not specified in Section 1709.3.2, the test specimen shall be subjected to an increasing superimposed load until structural failure occurs or the load is equal to two and one-half times the desired superimposed design load. The allowable superimposed design load shall be taken as the lesser of:

1. The load at the deflection limitation given in Section 1709.3.2.
2. The failure load divided by 2.5.
3. The maximum load applied divided by 2.5.

1709.3.2 Deflection. The deflection of structural members under the design load shall not exceed the limitations in Section 1604.3.

1709.4 Wall and partition assemblies. *Load-bearing wall* and partition assemblies shall sustain the test load both with and without window framing. The test load shall include all design load components. Wall and partition assemblies shall be tested both with and without door and window framing.

1709.5 Exterior window and door assemblies. The design pressure rating of exterior windows and doors in buildings shall be determined in accordance with Section 1709.5.1 or

1709.5.2. For the purposes of this section, the required design pressure shall be determined using the allowable stress design load combinations of Section 1605.3.

Exception: Structural wind load design pressures for window units smaller than the size tested in accordance with Section 1709.5.1 or 1709.5.2 shall be permitted to be higher than the design value of the tested unit provided such higher pressures are determined by accepted engineering analysis. All components of the small unit shall be the same as the tested unit. Where such calculated design pressures are used, they shall be validated by an additional test of the window unit having the highest allowable design pressure.

1709.5.1 Exterior windows and doors. Exterior windows and sliding doors shall be tested and *labeled* as conforming to AAMA/WDMA/CSA101/I.S.2/A440. The *label* shall state the name of the manufacturer, the *approved* labeling agency and the product designation as specified in AAMA/WDMA/CSA101/I.S.2/A440. Exterior side-hinged doors shall be tested and *labeled* as conforming to AAMA/WDMA/CSA101/I.S.2/A440 or comply with Section 1709.5.2. Products tested and *labeled* as conforming to AAMA/WDMA/CSA 101/I.S.2/A440 shall not be subject to the requirements of Sections 2403.2 and 2403.3.

1709.5.2 Exterior windows and door assemblies not provided for in Section 1709.5.1. Exterior window and door assemblies shall be tested in accordance with ASTM E 330. Structural performance of garage doors and rolling doors shall be determined in accordance with either ASTM E 330 or ANSI/DASMA 108, and shall meet the acceptance criteria of ANSI/DASMA 108. Exterior window and door assemblies containing glass shall comply with Section 2403. The design pressure for testing shall be calculated in accordance with Chapter 16. Each assembly shall be tested for 10 seconds at a load equal to 1.5 times the design pressure.

1709.6 Skylights and sloped glazing. Skylights and sloped glazing shall comply with the requirements of Chapter 24.

1709.7 Test specimens. Test specimens and construction shall be representative of the materials, workmanship and details normally used in practice. The properties of the materials used to construct the test assembly shall be determined on the basis of tests on samples taken from the load assembly or on representative samples of the materials used to construct the load test assembly. Required tests shall be conducted or witnessed by an *approved agency*.

➡ *

CHAPTER 18

SOILS AND FOUNDATIONS

User note: Code change proposals to this chapter will be considered by the IBC – Structural Code Development Committee during the 2016 (Group B) Code Development Cycle. See explanation on page iv.

SECTION 1801
GENERAL

1801.1 Scope. The provisions of this chapter shall apply to building and foundation systems.

1801.2 Design basis. Allowable bearing pressures, allowable stresses and design formulas provided in this chapter shall be used with the *allowable stress design* load combinations specified in Section 1605.3. The quality and design of materials used structurally in excavations and foundations shall comply with the requirements specified in Chapters 16, 19, 21, 22 and 23 of this code. Excavations and fills shall also comply with Chapter 33.

SECTION 1802
DEFINITIONS

1802.1 Definitions. The following words and terms are defined in Chapter 2:

DEEP FOUNDATION.

DRILLED SHAFT.

Socketed drilled shaft.

HELICAL PILE.

MICROPILE.

SHALLOW FOUNDATION.

SECTION 1803
GEOTECHNICAL INVESTIGATIONS

1803.1 General. Geotechnical investigations shall be conducted in accordance with Section 1803.2 and reported in accordance with Section 1803.6. Where required by the *building official* or where geotechnical investigations involve in-situ testing, laboratory testing or engineering calculations, such investigations shall be conducted by a *registered design professional.*

1803.2 Investigations required. Geotechnical investigations shall be conducted in accordance with Sections 1803.3 through 1803.5.

Exception: The *building official* shall be permitted to waive the requirement for a geotechnical investigation where satisfactory data from adjacent areas is available that demonstrates an investigation is not necessary for any of the conditions in Sections 1803.5.1 through 1803.5.6 and Sections 1803.5.10 and 1803.5.11.

1803.3 Basis of investigation. Soil classification shall be based on observation and any necessary tests of the materials disclosed by borings, test pits or other subsurface exploration made in appropriate locations. Additional studies shall be made as necessary to evaluate slope stability, soil strength, position and adequacy of load-bearing soils, the effect of moisture variation on soil-bearing capacity, compressibility, liquefaction and expansiveness.

1803.3.1 Scope of investigation. The scope of the geotechnical investigation including the number and types of borings or soundings, the equipment used to drill or sample, the in-situ testing equipment and the laboratory testing program shall be determined by a *registered design professional.*

1803.4 Qualified representative. The investigation procedure and apparatus shall be in accordance with generally accepted engineering practice. The *registered design professional* shall have a fully qualified representative on site during all boring or sampling operations.

1803.5 Investigated conditions. Geotechnical investigations shall be conducted as indicated in Sections 1803.5.1 through 1803.5.12.

1803.5.1 Classification. Soil materials shall be classified in accordance with ASTM D 2487.

1803.5.2 Questionable soil. Where the classification, strength or compressibility of the soil is in doubt or where a load-bearing value superior to that specified in this code is claimed, the *building official* shall be permitted to require that a geotechnical investigation be conducted.

1803.5.3 Expansive soil. In areas likely to have expansive soil, the *building official* shall require soil tests to determine where such soils do exist.

Soils meeting all four of the following provisions shall be considered expansive, except that tests to show compliance with Items 1, 2 and 3 shall not be required if the test prescribed in Item 4 is conducted:

1. Plasticity index (PI) of 15 or greater, determined in accordance with ASTM D 4318.
2. More than 10 percent of the soil particles pass a No. 200 sieve (75 μm), determined in accordance with ASTM D 422.
3. More than 10 percent of the soil particles are less than 5 micrometers in size, determined in accordance with ASTM D 422.
4. Expansion index greater than 20, determined in accordance with ASTM D 4829.

1803.5.4 Ground-water table. A subsurface soil investigation shall be performed to determine whether the exist-

ing ground-water table is above or within 5 feet (1524 mm) below the elevation of the lowest floor level where such floor is located below the finished ground level adjacent to the foundation.

Exception: A subsurface soil investigation to determine the location of the ground-water table shall not be required where waterproofing is provided in accordance with Section 1805.

1803.5.5 Deep foundations. Where deep foundations will be used, a geotechnical investigation shall be conducted and shall include all of the following, unless sufficient data upon which to base the design and installation is otherwise available:

1. Recommended deep foundation types and installed capacities.
2. Recommended center-to-center spacing of deep foundation elements.
3. Driving criteria.
4. Installation procedures.
5. Field inspection and reporting procedures (to include procedures for verification of the installed bearing capacity where required).
6. Load test requirements.
7. Suitability of deep foundation materials for the intended environment.
8. Designation of bearing stratum or strata.
9. Reductions for group action, where necessary.

1803.5.6 Rock strata. Where subsurface explorations at the project site indicate variations in the structure of rock upon which foundations are to be constructed, a sufficient number of borings shall be drilled to sufficient depths to assess the competency of the rock and its load-bearing capacity.

1803.5.7 Excavation near foundations. Where excavation will reduce support from any foundation, a *registered design professional* shall prepare an assessment of the structure as determined from examination of the structure, the review of available design documents and, if necessary, excavation of test pits. The *registered design professional* shall determine the requirements for underpinning and protection and prepare site-specific plans, details and sequence of work for submission. Such support shall be provided by underpinning, sheeting and bracing, or by other means acceptable to the *building official.*

1803.5.8 Compacted fill material. Where shallow foundations will bear on compacted fill material more than 12 inches (305 mm) in depth, a geotechnical investigation shall be conducted and shall include all of the following:

1. Specifications for the preparation of the site prior to placement of compacted fill material.
2. Specifications for material to be used as compacted fill.
3. Test methods to be used to determine the maximum dry density and optimum moisture content of the material to be used as compacted fill.
4. Maximum allowable thickness of each lift of compacted fill material.
5. Field test method for determining the in-place dry density of the compacted fill.
6. Minimum acceptable in-place dry density expressed as a percentage of the maximum dry density determined in accordance with Item 3.
7. Number and frequency of field tests required to determine compliance with Item 6.

1803.5.9 Controlled low-strength material (CLSM). Where shallow foundations will bear on controlled low-strength material (CLSM), a geotechnical investigation shall be conducted and shall include all of the following:

1. Specifications for the preparation of the site prior to placement of the CLSM.
2. Specifications for the CLSM.
3. Laboratory or field test method(s) to be used to determine the compressive strength or bearing capacity of the CLSM.
4. Test methods for determining the acceptance of the CLSM in the field.
5. Number and frequency of field tests required to determine compliance with Item 4.

1803.5.10 Alternate setback and clearance. Where setbacks or clearances other than those required in Section 1808.7 are desired, the *building official* shall be permitted to require a geotechnical investigation by a *registered design professional* to demonstrate that the intent of Section 1808.7 would be satisfied. Such an investigation shall include consideration of material, height of slope, slope gradient, load intensity and erosion characteristics of slope material.

1803.5.11 Seismic Design Categories C through F. For structures assigned to *Seismic Design Category* C, D, E or F, a geotechnical investigation shall be conducted, and shall include an evaluation of all of the following potential geologic and seismic hazards:

1. Slope instability.
2. Liquefaction.
3. Total and differential settlement.
4. Surface displacement due to faulting or seismically induced lateral spreading or lateral flow.

1803.5.12 Seismic Design Categories D through F. For structures assigned to *Seismic Design Category* D, E or F, the geotechnical investigation required by Section 1803.5.11 shall also include all of the following as applicable:

1. The determination of dynamic seismic lateral earth pressures on foundation walls and retaining walls supporting more than 6 feet (1.83 m) of backfill height due to design earthquake ground motions.

2. The potential for liquefaction and soil strength loss evaluated for site peak ground acceleration, earthquake magnitude and source characteristics consistent with the maximum considered earthquake ground motions. Peak ground acceleration shall be determined based on one of the following:
   - 2.1. A site-specific study in accordance with Section 21.5 of ASCE 7.
   - 2.2. In accordance with Section 11.8.3 of ASCE 7.
3. An assessment of potential consequences of liquefaction and soil strength loss including, but not limited to, the following:
   - 3.1. Estimation of total and differential settlement.
   - 3.2. Lateral soil movement.
   - 3.3. Lateral soil loads on foundations.
   - 3.4. Reduction in foundation soil-bearing capacity and lateral soil reaction.
   - 3.5. Soil downdrag and reduction in axial and lateral soil reaction for pile foundations.
   - 3.6. Increases in soil lateral pressures on retaining walls.
   - 3.7. Flotation of buried structures.
4. Discussion of mitigation measures such as, but not limited to, the following:
   - 4.1. Selection of appropriate foundation type and depths.
   - 4.2. Selection of appropriate structural systems to accommodate anticipated displacements and forces.
   - 4.3. Ground stabilization.
   - 4.4. Any combination of these measures and how they shall be considered in the design of the structure.

1803.6 Reporting. Where geotechnical investigations are required, a written report of the investigations shall be submitted to the *building official* by the permit applicant at the time of permit application. This geotechnical report shall include, but need not be limited to, the following information:

1. A plot showing the location of the soil investigations.
2. A complete record of the soil boring and penetration test logs and soil samples.
3. A record of the soil profile.
4. Elevation of the water table, if encountered.
5. Recommendations for foundation type and design criteria, including but not limited to: bearing capacity of natural or compacted soil; provisions to mitigate the effects of expansive soils; mitigation of the effects of liquefaction, differential settlement and varying soil strength; and the effects of adjacent loads.
6. Expected total and differential settlement.
7. Deep foundation information in accordance with Section 1803.5.5.
8. Special design and construction provisions for foundations of structures founded on expansive soils, as necessary.
9. Compacted fill material properties and testing in accordance with Section 1803.5.8.
10. Controlled low-strength material properties and testing in accordance with Section 1803.5.9.

SECTION 1804
EXCAVATION, GRADING AND FILL

1804.1 Excavation near foundations. Excavation for any purpose shall not reduce lateral support from any foundation or adjacent foundation without first underpinning or protecting the foundation against detrimental lateral or vertical movement, or both.

1804.2 Underpinning. Where underpinning is chosen to provide the protection or support of adjacent structures, the underpinning system shall be designed and installed in accordance with provisions of this chapter and Chapter 33.

1804.2.1 Underpinning sequencing. Underpinning shall be installed in a sequential manner that protects the neighboring structure and the working construction site. The sequence of installation shall be identified in the *approved construction documents.*

1804.3 Placement of backfill. The excavation outside the foundation shall be backfilled with soil that is free of organic material, construction debris, cobbles and boulders or with a controlled low-strength material (CLSM). The backfill shall be placed in lifts and compacted in a manner that does not damage the foundation or the waterproofing or dampproofing material.

Exception: CLSM need not be compacted.

1804.4 Site grading. The ground immediately adjacent to the foundation shall be sloped away from the building at a slope of not less than one unit vertical in 20 units horizontal (5-percent slope) for a minimum distance of 10 feet (3048 mm) measured perpendicular to the face of the wall. If physical obstructions or lot lines prohibit 10 feet (3048 mm) of horizontal distance, a 5-percent slope shall be provided to an *approved* alternative method of diverting water away from the foundation. Swales used for this purpose shall be sloped a minimum of 2 percent where located within 10 feet (3048 mm) of the building foundation. Impervious surfaces within 10 feet (3048 mm) of the building foundation shall be sloped a minimum of 2 percent away from the building.

Exception: Where climatic or soil conditions warrant, the slope of the ground away from the building foundation shall be permitted to be reduced to not less than one unit vertical in 48 units horizontal (2-percent slope).

The procedure used to establish the final ground level adjacent to the foundation shall account for additional settlement of the backfill.

1804.5 Grading and fill in flood hazard areas. In *flood hazard areas* established in Section 1612.3, grading, fill, or both, shall not be *approved*:

1. Unless such fill is placed, compacted and sloped to minimize shifting, slumping and erosion during the rise and fall of flood water and, as applicable, wave action.
2. In floodways, unless it has been demonstrated through hydrologic and hydraulic analyses performed by a *registered design professional* in accordance with standard engineering practice that the proposed grading or fill, or both, will not result in any increase in flood levels during the occurrence of the *design flood*.
3. In *coastal high hazard areas*, unless such fill is conducted and/or placed to avoid diversion of water and waves toward any building or structure.
4. Where design flood elevations are specified but floodways have not been designated, unless it has been demonstrated that the cumulative effect of the proposed *flood hazard area* encroachment, when combined with all other existing and anticipated *flood hazard area* encroachment, will not increase the design flood elevation more than 1 foot (305 mm) at any point.

1804.6 Compacted fill material. Where shallow foundations will bear on compacted fill material, the compacted fill shall comply with the provisions of an *approved* geotechnical report, as set forth in Section 1803.

Exception: Compacted fill material 12 inches (305 mm) in depth or less need not comply with an *approved* report, provided the in-place dry density is not less than 90 percent of the maximum dry density at optimum moisture content determined in accordance with ASTM D 1557. The compaction shall be verified by *special inspection* in accordance with Section 1705.6.

1804.7 Controlled low-strength material (CLSM). Where shallow foundations will bear on controlled low-strength material (CLSM), the CLSM shall comply with the provisions of an *approved* geotechnical report, as set forth in Section 1803.

SECTION 1805
DAMPPROOFING AND WATERPROOFING

1805.1 General. Walls or portions thereof that retain earth and enclose interior spaces and floors below grade shall be waterproofed and dampproofed in accordance with this section, with the exception of those spaces containing groups other than residential and institutional where such omission is not detrimental to the building or occupancy.

Ventilation for crawl spaces shall comply with Section 1203.4.

1805.1.1 Story above grade plane. Where a basement is considered a *story above grade plane* and the finished ground level adjacent to the basement wall is below the basement floor elevation for 25 percent or more of the perimeter, the floor and walls shall be dampproofed in accordance with Section 1805.2 and a foundation drain shall be installed in accordance with Section 1805.4.2. The foundation drain shall be installed around the portion of the perimeter where the basement floor is below ground level. The provisions of Sections 1803.5.4, 1805.3 and 1805.4.1 shall not apply in this case.

1805.1.2 Under-floor space. The finished ground level of an under-floor space such as a crawl space shall not be located below the bottom of the footings. Where there is evidence that the ground-water table rises to within 6 inches (152 mm) of the ground level at the outside building perimeter, or that the surface water does not readily drain from the building site, the ground level of the under-floor space shall be as high as the outside finished ground level, unless an *approved* drainage system is provided. The provisions of Sections 1803.5.4, 1805.2, 1805.3 and 1805.4 shall not apply in this case.

1805.1.2.1 Flood hazard areas. For buildings and structures in *flood hazard areas* as established in Section 1612.3, the finished ground level of an under-floor space such as a crawl space shall be equal to or higher than the outside finished ground level on at least one side.

Exception: Under-floor spaces of Group R-3 buildings that meet the requirements of FEMA TB 11.

1805.1.3 Ground-water control. Where the ground-water table is lowered and maintained at an elevation not less than 6 inches (152 mm) below the bottom of the lowest floor, the floor and walls shall be dampproofed in accordance with Section 1805.2. The design of the system to lower the ground-water table shall be based on accepted principles of engineering that shall consider, but not necessarily be limited to, permeability of the soil, rate at which water enters the drainage system, rated capacity of pumps, head against which pumps are to operate and the rated capacity of the disposal area of the system.

1805.2 Dampproofing. Where hydrostatic pressure will not occur as determined by Section 1803.5.4, floors and walls for other than wood foundation systems shall be dampproofed in accordance with this section. Wood foundation systems shall be constructed in accordance with AWC PWF.

1805.2.1 Floors. Dampproofing materials for floors shall be installed between the floor and the base course required by Section 1805.4.1, except where a separate floor is provided above a concrete slab.

Where installed beneath the slab, dampproofing shall consist of not less than 6-mil (0.006 inch; 0.152 mm) polyethylene with joints lapped not less than 6 inches (152 mm), or other *approved* methods or materials. Where permitted to be installed on top of the slab, dampproofing shall consist of mopped-on bitumen, not less than 4-mil (0.004 inch; 0.102 mm) polyethylene, or other *approved* methods or materials. Joints in the membrane shall be lapped and sealed in accordance with the manufacturer's installation instructions.

1805.2.2 Walls. Dampproofing materials for walls shall be installed on the exterior surface of the wall, and shall extend from the top of the footing to above ground level.

Dampproofing shall consist of a bituminous material, 3 pounds per square *yard* (16 N/m^2) of acrylic modified cement, $^1/_8$ inch (3.2 mm) coat of surface-bonding mortar complying with ASTM C 887, any of the materials permitted for waterproofing by Section 1805.3.2 or other *approved* methods or materials.

1805.2.2.1 Surface preparation of walls. Prior to application of dampproofing materials on concrete walls, holes and recesses resulting from the removal of form ties shall be sealed with a bituminous material or other *approved* methods or materials. Unit masonry walls shall be parged on the exterior surface below ground level with not less than $^3/_8$ inch (9.5 mm) of Portland cement mortar. The parging shall be coved at the footing.

Exception: Parging of unit masonry walls is not required where a material is *approved* for direct application to the masonry.

1805.3 Waterproofing. Where the ground-water investigation required by Section 1803.5.4 indicates that a hydrostatic pressure condition exists, and the design does not include a ground-water control system as described in Section 1805.1.3, walls and floors shall be waterproofed in accordance with this section.

1805.3.1 Floors. Floors required to be waterproofed shall be of concrete and designed and constructed to withstand the hydrostatic pressures to which the floors will be subjected.

Waterproofing shall be accomplished by placing a membrane of rubberized asphalt, butyl rubber, fully adhered/fully bonded HDPE or polyolefin composite membrane or not less than 6-mil [0.006 inch (0.152 mm)] polyvinyl chloride with joints lapped not less than 6 inches (152 mm) or other *approved* materials under the slab. Joints in the membrane shall be lapped and sealed in accordance with the manufacturer's installation instructions.

1805.3.2 Walls. Walls required to be waterproofed shall be of concrete or masonry and shall be designed and constructed to withstand the hydrostatic pressures and other lateral loads to which the walls will be subjected.

Waterproofing shall be applied from the bottom of the wall to not less than 12 inches (305 mm) above the maximum elevation of the ground-water table. The remainder of the wall shall be dampproofed in accordance with Section 1805.2.2. Waterproofing shall consist of two-ply hot-mopped felts, not less than 6-mil (0.006 inch; 0.152 mm) polyvinyl chloride, 40-mil (0.040 inch; 1.02 mm) polymer-modified asphalt, 6-mil (0.006 inch; 0.152 mm) polyethylene or other *approved* methods or materials capable of bridging nonstructural cracks. Joints in the membrane shall be lapped and sealed in accordance with the manufacturer's installation instructions.

1805.3.2.1 Surface preparation of walls. Prior to the application of waterproofing materials on concrete or masonry walls, the walls shall be prepared in accordance with Section 1805.2.2.1.

1805.3.3 Joints and penetrations. Joints in walls and floors, joints between the wall and floor and penetrations of the wall and floor shall be made water tight utilizing *approved* methods and materials.

1805.4 Subsoil drainage system. Where a hydrostatic pressure condition does not exist, dampproofing shall be provided and a base shall be installed under the floor and a drain installed around the foundation perimeter. A subsoil drainage system designed and constructed in accordance with Section 1805.1.3 shall be deemed adequate for lowering the ground-water table.

1805.4.1 Floor base course. Floors of basements, except as provided for in Section 1805.1.1, shall be placed over a floor base course not less than 4 inches (102 mm) in thickness that consists of gravel or crushed stone containing not more than 10 percent of material that passes through a No. 4 (4.75 mm) sieve.

Exception: Where a site is located in well-drained gravel or sand/gravel mixture soils, a floor base course is not required.

1805.4.2 Foundation drain. A drain shall be placed around the perimeter of a foundation that consists of gravel or crushed stone containing not more than 10-percent material that passes through a No. 4 (4.75 mm) sieve. The drain shall extend a minimum of 12 inches (305 mm) beyond the outside edge of the footing. The thickness shall be such that the bottom of the drain is not higher than the bottom of the base under the floor, and that the top of the drain is not less than 6 inches (152 mm) above the top of the footing. The top of the drain shall be covered with an *approved* filter membrane material. Where a drain tile or perforated pipe is used, the invert of the pipe or tile shall not be higher than the floor elevation. The top of joints or the top of perforations shall be protected with an *approved* filter membrane material. The pipe or tile shall be placed on not less than 2 inches (51 mm) of gravel or crushed stone complying with Section 1805.4.1, and shall be covered with not less than 6 inches (152 mm) of the same material.

1805.4.3 Drainage discharge. The floor base and foundation perimeter drain shall discharge by gravity or mechanical means into an *approved* drainage system that complies with the *International Plumbing Code*.

Exception: Where a site is located in well-drained gravel or sand/gravel mixture soils, a dedicated drainage system is not required.

SECTION 1806
PRESUMPTIVE LOAD-BEARING VALUES OF SOILS

1806.1 Load combinations. The presumptive load-bearing values provided in Table 1806.2 shall be used with the *allowable stress design* load combinations specified in Section 1605.3. The values of vertical foundation pressure and lateral bearing pressure given in Table 1806.2 shall be permitted to be increased by one-third where used with the alternative

basic load combinations of Section 1605.3.2 that include wind or earthquake loads.

1806.2 Presumptive load-bearing values. The load-bearing values used in design for supporting soils near the surface shall not exceed the values specified in Table 1806.2 unless data to substantiate the use of higher values are submitted and *approved*. Where the *building official* has reason to doubt the classification, strength or compressibility of the soil, the requirements of Section 1803.5.2 shall be satisfied.

Presumptive load-bearing values shall apply to materials with similar physical characteristics and dispositions. Mud, organic silt, organic clays, peat or unprepared fill shall not be assumed to have a presumptive load-bearing capacity unless data to substantiate the use of such a value are submitted.

Exception: A presumptive load-bearing capacity shall be permitted to be used where the *building official* deems the load-bearing capacity of mud, organic silt or unprepared fill is adequate for the support of lightweight or temporary structures.

1806.3 Lateral load resistance. Where the presumptive values of Table 1806.2 are used to determine resistance to lateral loads, the calculations shall be in accordance with Sections 1806.3.1 through 1806.3.4.

1806.3.1 Combined resistance. The total resistance to lateral loads shall be permitted to be determined by combining the values derived from the lateral bearing pressure and the lateral sliding resistance specified in Table 1806.2.

1806.3.2 Lateral sliding resistance limit. For clay, sandy clay, silty clay, clayey silt, silt and sandy silt, in no case shall the lateral sliding resistance exceed one-half the dead load.

1806.3.3 Increase for depth. The lateral bearing pressures specified in Table 1806.2 shall be permitted to be increased by the tabular value for each additional foot (305 mm) of depth to a maximum of 15 times the tabular value.

1806.3.4 Increase for poles. Isolated poles for uses such as flagpoles or signs and poles used to support buildings that are not adversely affected by a $^1/_2$-inch (12.7 mm) motion at the ground surface due to short-term lateral loads shall be permitted to be designed using lateral bearing pressures equal to two times the tabular values.

SECTION 1807
FOUNDATION WALLS, RETAINING WALLS AND EMBEDDED POSTS AND POLES

1807.1 Foundation walls. Foundation walls shall be designed and constructed in accordance with Sections 1807.1.1 through 1807.1.6. Foundation walls shall be supported by foundations designed in accordance with Section 1808.

1807.1.1 Design lateral soil loads. Foundation walls shall be designed for the lateral soil loads set forth in Section 1610.

1807.1.2 Unbalanced backfill height. Unbalanced backfill height is the difference in height between the exterior finish ground level and the lower of the top of the concrete footing that supports the foundation wall or the interior finish ground level. Where an interior concrete slab on grade is provided and is in contact with the interior surface of the foundation wall, the unbalanced backfill height shall be permitted to be measured from the exterior finish ground level to the top of the interior concrete slab.

1807.1.3 Rubble stone foundation walls. Foundation walls of rough or random rubble stone shall not be less than 16 inches (406 mm) thick. Rubble stone shall not be used for foundation walls of structures assigned to *Seismic Design Category* C, D, E or F.

1807.1.4 Permanent wood foundation systems. Permanent wood foundation systems shall be designed and installed in accordance with AWC PWF. Lumber and plywood shall be treated in accordance with AWPA U1 (Commodity Specification A, Use Category 4B and Section 5.2) and shall be identified in accordance with Section 2303.1.9.1.

TABLE 1806.2
PRESUMPTIVE LOAD-BEARING VALUES

CLASS OF MATERIALS	VERTICAL FOUNDATION PRESSURE (psf)	LATERAL BEARING PRESSURE (psf/ft below natural grade)	LATERAL SLIDING RESISTANCE	
			Coefficient of friction[a]	Cohesion (psf)[b]
1. Crystalline bedrock	12,000	1,200	0.70	—
2. Sedimentary and foliated rock	4,000	400	0.35	—
3. Sandy gravel and/or gravel (GW and GP)	3,000	200	0.35	—
4. Sand, silty sand, clayey sand, silty gravel and clayey gravel (SW, SP, SM, SC, GM and GC)	2,000	150	0.25	—
5. Clay, sandy clay, silty clay, clayey silt, silt and sandy silt (CL, ML, MH and CH)	1,500	100	—	130

For SI: 1 pound per square foot = 0.0479kPa, 1 pound per square foot per foot = 0.157 kPa/m.

a. Coefficient to be multiplied by the dead load.

b. Cohesion value to be multiplied by the contact area, as limited by Section 1806.3.2.

1807.1.5 Concrete and masonry foundation walls. Concrete and masonry foundation walls shall be designed in accordance with Chapter 19 or 21, as applicable.

Exception: Concrete and masonry foundation walls shall be permitted to be designed and constructed in accordance with Section 1807.1.6.

1807.1.6 Prescriptive design of concrete and masonry foundation walls. Concrete and masonry foundation walls that are laterally supported at the top and bottom shall be permitted to be designed and constructed in accordance with this section.

1807.1.6.1 Foundation wall thickness. The thickness of prescriptively designed foundation walls shall not be less than the thickness of the wall supported, except that foundation walls of at least 8-inch (203 mm) nominal width shall be permitted to support brick-veneered frame walls and 10-inch-wide (254 mm) cavity walls provided the requirements of Section 1807.1.6.2 or 1807.1.6.3 are met.

1807.1.6.2 Concrete foundation walls. Concrete foundation walls shall comply with the following:

1. The thickness shall comply with the requirements of Table 1807.1.6.2.
2. The size and spacing of vertical reinforcement shown in Table 1807.1.6.2 are based on the use of reinforcement with a minimum yield strength of 60,000 pounds per square inch (psi) (414 MPa).Vertical reinforcement with a minimum yield strength of 40,000 psi (276 MPa) or 50,000 psi (345 MPa) shall be permitted, provided the same size bar is used and the spacing shown in the table is reduced by multiplying the spacing by 0.67 or 0.83, respectively.
3. Vertical reinforcement, when required, shall be placed nearest the inside face of the wall a distance, *d*, from the outside face (soil face) of the wall. The distance, *d*, is equal to the wall thickness, *t*, minus 1.25 inches (32 mm) plus one-half

TABLE 1807.1.6.2
CONCRETE FOUNDATION WALLS[b, c]

MAXIMUM WALL HEIGHT (feet)	MAXIMUM UNBALANCED BACKFILL HEIGHT[e] (feet)	MINIMUM VERTICAL REINFORCEMENT-BAR SIZE AND SPACING (inches)								
		Design lateral soil load[a] (psf per foot of depth)								
		30[d]			45[d]			60		
		Minimum wall thickness (inches)								
		7.5	9.5	11.5	7.5	9.5	11.5	7.5	9.5	11.5
5	4	PC	PC	PC	PC	PC	PC	PC	PC	PC
	5	PC	PC	PC	PC	PC	PC	PC	PC	PC
6	4	PC	PC	PC	PC	PC	PC	PC	PC	PC
	5	PC	PC	PC	PC	PC	PC	PC	PC	PC
	6	PC	PC	PC	PC	PC	PC	PC	PC	PC
7	4	PC	PC	PC	PC	PC	PC	PC	PC	PC
	5	PC	PC	PC	PC	PC	PC	PC	PC	PC
	6	PC	PC	PC	PC	PC	PC	#5 at 48	PC	PC
	7	PC	PC	PC	#5 at 46	PC	PC	#6 at 48	PC	PC
8	4	PC	PC	PC	PC	PC	PC	PC	PC	PC
	5	PC	PC	PC	PC	PC	PC	PC	PC	PC
	6	PC	PC	PC	PC	PC	PC	#5 at 43	PC	PC
	7	PC	PC	PC	#5 at 41	PC	PC	#6 at 43	PC	PC
	8	#5 at 47	PC	PC	#6 at 43	PC	PC	#6 at 32	#6 at 44	PC
9	4	PC	PC	PC	PC	PC	PC	PC	PC	PC
	5	PC	PC	PC	PC	PC	PC	PC	PC	PC
	6	PC	PC	PC	PC	PC	PC	#5 at 39	PC	PC
	7	PC	PC	PC	#5 at 37	PC	PC	#6 at 38	#5 at 37	PC
	8	#5 at 41	PC	PC	#6 at 38	#5 at 37	PC	#7 at 39	#6 at 39	#4 at 48
	9[d]	#6 at 46	PC	PC	#7 at 41	#6 at 41	PC	#7 at 31	#7 at 41	#6 at 39
10	4	PC	PC	PC	PC	PC	PC	PC	PC	PC
	5	PC	PC	PC	PC	PC	PC	PC	PC	PC
	6	PC	PC	PC	PC	PC	PC	#5 at 37	PC	PC
	7	PC	PC	PC	#6 at 48	PC	PC	#6 at 35	#6 at 48	PC
	8	#5 at 38	PC	PC	#7 at 47	#6 at 47	PC	#7 at 35	#7 at 47	#6 at 45
	9[d]	#6 at 41	#4 at 48	PC	#7 at 37	#7 at 48	#4 at 48	#6 at 22	#7 at 37	#7 at 47
	10[d]	#7 at 45	#6 at 45	PC	#7 at 31	#7 at 40	#6 at 38	#6 at 22	#7 at 30	#7 at 38

For SI: 1 inch = 25.4 mm, 1 foot = 304.8 mm, 1 pound per square foot per foot = 0.157 kPa/m.

a. For design lateral soil loads, see Section 1610.

b. Provisions for this table are based on design and construction requirements specified in Section 1807.1.6.2.

c. "PC" means plain concrete.

d. Where unbalanced backfill height exceeds 8 feet and design lateral soil loads from Table 1610.1 are used, the requirements for 30 and 45 psf per foot of depth are not applicable (see Section 1610).

e. For height of unbalanced backfill, see Section 1807.1.2.

the bar diameter, d_b, [$d = t - (1.25 + d_b / 2)$]. The reinforcement shall be placed within a tolerance of $\pm\, {}^3/_8$ inch (9.5 mm) where d is less than or equal to 8 inches (203 mm) or $\pm\, {}^1/_2$ inch (12.7 mm) where d is greater than 8 inches (203 mm).

4. In lieu of the reinforcement shown in Table 1807.1.6.2, smaller reinforcing bar sizes with closer spacings that provide an equivalent cross-sectional area of reinforcement per unit length shall be permitted.
5. Concrete cover for reinforcement measured from the inside face of the wall shall not be less than ${}^3/_4$ inch (19.1 mm). Concrete cover for reinforcement measured from the outside face of the wall shall not be less than $1\,{}^1/_2$ inches (38 mm) for No. 5 bars and smaller, and not less than 2 inches (51 mm) for larger bars.
6. Concrete shall have a specified compressive strength, f'_c, of not less than 2,500 psi (17.2 MPa).
7. The unfactored axial load per linear foot of wall shall not exceed $1.2\, t f'_c$ where t is the specified wall thickness in inches.

1807.1.6.2.1 Seismic requirements. Based on the *seismic design category* assigned to the structure in accordance with Section 1613, concrete foundation walls designed using Table 1807.1.6.2 shall be subject to the following limitations:

1. *Seismic Design Categories* A and B. Not less than one No. 5 bar shall be provided around window, door and similar sized openings. The bar shall be anchored to develop f_y in tension at the corners of openings.
2. *Seismic Design Categories* C, D, E and F. Tables shall not be used except as allowed for plain concrete members in Section 1905.1.7.

1807.1.6.3 Masonry foundation walls. Masonry foundation walls shall comply with the following:

1. The thickness shall comply with the requirements of Table 1807.1.6.3(1) for plain masonry walls or Table 1807.1.6.3(2), 1807.1.6.3(3) or 1807.1.6.3(4) for masonry walls with reinforcement.
2. Vertical reinforcement shall have a minimum yield strength of 60,000 psi (414 MPa).
3. The specified location of the reinforcement shall equal or exceed the effective depth distance, d, noted in Tables 1807.1.6.3(2), 1807.1.6.3(3) and 1807.1.6.3(4) and shall be measured from the face of the exterior (soil) side of the wall to the center of the vertical reinforcement. The reinforcement shall be placed within the tolerances specified in TMS 602/ACI 530.1/ASCE 6, Article 3.4.B.11, of the specified location.
4. Grout shall comply with Section 2103.3.
5. Concrete masonry units shall comply with ASTM C 90.
6. Clay masonry units shall comply with ASTM C 652 for hollow brick, except compliance with

TABLE 1807.1.6.3(1)
PLAIN MASONRY FOUNDATION WALLS[a, b, c]

MAXIMUM WALL HEIGHT (feet)	MAXIMUM UNBALANCED BACKFILL HEIGHT[e] (feet)	MINIMUM NOMINAL WALL THICKNESS (inches)		
		Design lateral soil load[a] (psf per foot of depth)		
		30[f]	45[f]	60
7	4 (or less)	8	8	8
	5	8	10	10
	6	10	12	10 (solid[c])
	7	12	10 (solid[c])	10 (solid[c])
8	4 (or less)	8	8	8
	5	8	10	12
	6	10	12	12 (solid[c])
	7	12	12 (solid[c])	Note d
	8	10 (solid[c])	12 (solid[c])	Note d
9	4 (or less)	8	8	8
	5	8	10	12
	6	12	12	12 (solid[c])
	7	12 (solid[c])	12 (solid[c])	Note d
	8	12 (solid[c])	Note d	Note d
	9[f]	Note d	Note d	Note d

For SI: 1 inch = 25.4 mm, 1 foot = 304.8 mm, 1 pound per square foot per foot = 0.157 kPa/m.

a. For design lateral soil loads, see Section 1610.

b. Provisions for this table are based on design and construction requirements specified in Section 1807.1.6.3.

c. Solid grouted hollow units or solid masonry units.

d. A design in compliance with Chapter 21 or reinforcement in accordance with Table 1807.1.6.3(2) is required.

e. For height of unbalanced backfill, see Section 1807.1.2.

f. Where unbalanced backfill height exceeds 8 feet and design lateral soil loads from Table 1610.1 are used, the requirements for 30 and 45 psf per foot of depth are not applicable (see Section 1610).

ASTM C 62 or ASTM C 216 shall be permitted where solid masonry units are installed in accordance with Table 1807.1.6.3(1) for plain masonry.

7. Masonry units shall be laid in running bond and installed with Type M or S mortar in accordance with Section 2103.2.1.
8. The unfactored axial load per linear foot of wall shall not exceed $1.2\,t f'_m$ where t is the specified wall thickness in inches and f'_m is the specified compressive strength of masonry in pounds per square inch.
9. At least 4 inches (102 mm) of solid masonry shall be provided at girder supports at the top of hollow masonry unit foundation walls.
10. Corbeling of masonry shall be in accordance with Section 2104.1. Where an 8-inch (203 mm) wall is corbeled, the top corbel shall not extend higher than the bottom of the floor framing and shall be a full course of headers at least 6 inches (152 mm) in length or the top course bed joint shall be tied to the vertical wall projection. The tie shall be W2.8 (4.8 mm) and spaced at a maximum horizontal distance of 36 inches (914 mm). The hollow space behind the corbelled masonry shall be filled with mortar or grout.

1807.1.6.3.1 Alternative foundation wall reinforcement. In lieu of the reinforcement provisions for masonry foundation walls in Table 1807.1.6.3(2), 1807.1.6.3(3) or 1807.1.6.3(4), alternative reinforcing bar sizes and spacings having an equivalent cross-sectional area of reinforcement per linear foot (mm) of wall shall be permitted to be used, provided the spacing of reinforcement does not exceed 72 inches (1829 mm) and reinforcing bar sizes do not exceed No. 11.

TABLE 1807.1.6.3(2)
8-INCH MASONRY FOUNDATION WALLS WITH REINFORCEMENT WHERE d ≥ 5 INCHES[a, b, c]

MAXIMUM WALL HEIGHT (feet-inches)	MAXIMUM UNBALANCED BACKFILL HEIGHT[d] (feet-inches)	MINIMUM VERTICAL REINFORCEMENT-BAR SIZE AND SPACING (inches)		
		Design lateral soil load[a] (psf per foot of depth)		
		30[e]	45[e]	60
7-4	4-0 (or less)	#4 at 48	#4 at 48	#4 at 48
	5-0	#4 at 48	#4 at 48	#4 at 48
	6-0	#4 at 48	#5 at 48	#5 at 48
	7-4	#5 at 48	#6 at 48	#7 at 48
8-0	4-0 (or less)	#4 at 48	#4 at 48	#4 at 48
	5-0	#4 at 48	#4 at 48	#4 at 48
	6-0	#4 at 48	#5 at 48	#5 at 48
	7-0	#5 at 48	#6 at 48	#7 at 48
	8-0	#5 at 48	#6 at 48	#7 at 48
8-8	4-0 (or less)	#4 at 48	#4 at 48	#4 at 48
	5-0	#4 at 48	#4 at 48	#5 at 48
	6-0	#4 at 48	#5 at 48	#6 at 48
	7-0	#5 at 48	#6 at 48	#7 at 48
	8-8[e]	#6 at 48	#7 at 48	#8 at 48
9-4	4-0 (or less)	#4 at 48	#4 at 48	#4 at 48
	5-0	#4 at 48	#4 at 48	#5 at 48
	6-0	#4 at 48	#5 at 48	#6 at 48
	7-0	#5 at 48	#6 at 48	#7 at 48
	8-0	#6 at 48	#7 at 48	#8 at 48
	9-4[e]	#7 at 48	#8 at 48	#9 at 48
10-0	4-0 (or less)	#4 at 48	#4 at 48	#4 at 48
	5-0	#4 at 48	#4 at 48	#5 at 48
	6-0	#4 at 48	#5 at 48	#6 at 48
	7-0	#5 at 48	#6 at 48	#7 at 48
	8-0	#6 at 48	#7 at 48	#8 at 48
	9-0[e]	#7 at 48	#8 at 48	#9 at 48
	10-0[e]	#7 at 48	#9 at 48	#9 at 48

For SI: 1 inch = 25.4 mm, 1 foot = 304.8 mm, 1 pound per square foot per foot = 0.157 kPa/m.

a. For design lateral soil loads, see Section 1610.

b. Provisions for this table are based on design and construction requirements specified in Section 1807.1.6.3.

c. For alternative reinforcement, see Section 1807.1.6.3.1.

d. For height of unbalanced backfill, see Section 1807.1.2.

e. Where unbalanced backfill height exceeds 8 feet and design lateral soil loads from Table 1610.1 are used, the requirements for 30 and 45 psf per foot of depth are not applicable. See Section 1610.

1807.1.6.3.2 Seismic requirements. Based on the *seismic design category* assigned to the structure in accordance with Section 1613, masonry foundation walls designed using Tables 1807.1.6.3(1) through 1807.1.6.3(4) shall be subject to the following limitations:

1. *Seismic Design Categories* A and B. No additional seismic requirements.
2. *Seismic Design Category* C. A design using Tables 1807.1.6.3(1) through 1807.1.6.3(4) is subject to the seismic requirements of Section 7.4.3 of TMS 402/ACI 530/ASCE 5.
3. *Seismic Design Category* D. A design using Tables 1807.1.6.3(2) through 1807.1.6.3(4) is subject to the seismic requirements of Section 7.4.4 of TMS 402/ACI 530/ASCE 5.
4. *Seismic Design Categories* E and F. A design using Tables 1807.1.6.3(2) through 1807.1.6.3(4) is subject to the seismic requirements of Section 7.4.5 of TMS 402/ACI 530/ASCE 5.

1807.2 Retaining walls. Retaining walls shall be designed in accordance with Sections 1807.2.1 through 1807.2.3.

1807.2.1 General. Retaining walls shall be designed to ensure stability against overturning, sliding, excessive foundation pressure and water uplift. Where a keyway is extended below the wall base with the intent to engage passive pressure and enhance sliding stability, lateral soil pressures on both sides of the keyway shall be considered in the sliding analysis.

1807.2.2 Design lateral soil loads. Retaining walls shall be designed for the lateral soil loads set forth in Section 1610.

1807.2.3 Safety factor. Retaining walls shall be designed to resist the lateral action of soil to produce sliding and overturning with a minimum safety factor of 1.5 in each case. The load combinations of Section 1605 shall not apply to this requirement. Instead, design shall be based on 0.7 times nominal earthquake loads, 1.0 times other *nominal loads*, and investigation with one or more of the variable loads set to zero. The safety factor against lateral sliding shall be taken as the available soil resistance at the

TABLE 1807.1.6.3(3)
10-INCH MASONRY FOUNDATION WALLS WITH REINFORCEMENT WHERE d ≥ 6.75 INCHES [a, b, c]

MAXIMUM WALL HEIGHT (feet-inches)	MAXIMUM UNBALANCED BACKFILL HEIGHT[d] (feet-inches)	MINIMUM VERTICAL REINFORCEMENT-BAR SIZE AND SPACING (inches)		
		Design lateral soil load[a] (psf per foot of depth)		
		30[e]	45[e]	60
7-4	4-0 (or less)	#4 at 56	#4 at 56	#4 at 56
	5-0	#4 at 56	#4 at 56	#4 at 56
	6-0	#4 at 56	#4 at 56	#5 at 56
	7-4	#4 at 56	#5 at 56	#6 at 56
8-0	4-0 (or less)	#4 at 56	#4 at 56	#4 at 56
	5-0	#4 at 56	#4 at 56	#4 at 56
	6-0	#4 at 56	#4 at 56	#5 at 56
	7-0	#4 at 56	#5 at 56	#6 at 56
	8-0	#5 at 56	#6 at 56	#7 at 56
8-8	4-0 (or less)	#4 at 56	#4 at 56	#4 at 56
	5-0	#4 at 56	#4 at 56	#4 at 56
	6-0	#4 at 56	#4 at 56	#5 at 56
	7-0	#4 at 56	#5 at 56	#6 at 56
	8-8[e]	#5 at 56	#7 at 56	#8 at 56
9-4	4-0 (or less)	#4 at 56	#4 at 56	#4 at 56
	5-0	#4 at 56	#4 at 56	#4 at 56
	6-0	#4 at 56	#5 at 56	#5 at 56
	7-0	#4 at 56	#5 at 56	#6 at 56
	8-0	#5 at 56	#6 at 56	#7 at 56
	9-4[e]	#6 at 56	#7 at 56	#7 at 56
10-0	4-0 (or less)	#4 at 56	#4 at 56	#4 at 56
	5-0	#4 at 56	#4 at 56	#4 at 56
	6-0	#4 at 56	#5 at 56	#5 at 56
	7-0	#5 at 56	#6 at 56	#7 at 56
	8-0	#5 at 56	#7 at 56	#8 at 56
	9-0[e]	#6 at 56	#7 at 56	#9 at 56
	10-0[e]	#7 at 56	#8 at 56	#9 at 56

For SI: 1 inch = 25.4 mm, 1 foot = 304.8 mm, 1 pound per square foot per foot = 1.157 kPa/m.

a. For design lateral soil loads, see Section 1610.

b. Provisions for this table are based on design and construction requirements specified in Section 1807.1.6.3.

c. For alternative reinforcement, see Section 1807.1.6.3.1.

d. For height of unbalanced backfill, see Section 1807.1.2.

e. Where unbalanced backfill height exceeds 8 feet and design lateral soil loads from Table 1610.1 are used, the requirements for 30 and 45 psf per foot of depth are not applicable. See Section 1610.

2012

base of the retaining wall foundation divided by the net lateral force applied to the retaining wall.

Exception: Where earthquake loads are included, the minimum safety factor for retaining wall sliding and overturning shall be 1.1.

1807.3 Embedded posts and poles. Designs to resist both axial and lateral loads employing posts or poles as columns embedded in earth or in concrete footings in earth shall be in accordance with Sections 1807.3.1 through 1807.3.3.

1807.3.1 Limitations. The design procedures outlined in this section are subject to the following limitations:

1. The frictional resistance for structural walls and slabs on silts and clays shall be limited to one-half of the normal force imposed on the soil by the weight of the footing or slab.
2. Posts embedded in earth shall not be used to provide lateral support for structural or nonstructural materials such as plaster, masonry or concrete unless bracing is provided that develops the limited deflection required.

Wood poles shall be treated in accordance with AWPA U1 for sawn timber posts (Commodity Specification A, Use Category 4B) and for round timber posts (Commodity Specification B, Use Category 4B).

1807.3.2 Design criteria. The depth to resist lateral loads shall be determined using the design criteria established in Sections 1807.3.2.1 through 1807.3.2.3, or by other methods *approved* by the *building official*.

1807.3.2.1 Nonconstrained. The following formula shall be used in determining the depth of embedment required to resist lateral loads where no lateral constraint is provided at the ground surface, such as by a rigid floor or rigid ground surface pavement, and where no lateral constraint is provided above the ground surface, such as by a structural diaphragm.

$$d = 0.5A\{1 + [1 + (4.36h/A)]^{1/2}\} \qquad \textbf{(Equation 18-1)}$$

where:

$A = 2.34P/(S_1 b)$.

TABLE 1807.1.6.3(4)
12-INCH MASONRY FOUNDATION WALLS WITH REINFORCEMENT WHERE d ≥ 8.75 INCHES[a, b, c]

MAXIMUM WALL HEIGHT (feet-inches)	MAXIMUM UNBALANCED BACKFILL HEIGHT[d] (feet-inches)	MINIMUM VERTICAL REINFORCEMENT-BAR SIZE AND SPACING (inches)		
		Design lateral soil load[a] (psf per foot of depth)		
		30[e]	45[e]	60
7-4	4 (or less)	#4 at 72	#4 at 72	#4 at 72
	5-0	#4 at 72	#4 at 72	#4 at 72
	6-0	#4 at 72	#4 at 72	#5 at 72
	7-4	#4 at 72	#5 at 72	#6 at 72
8-0	4 (or less)	#4 at 72	#4 at 72	#4 at 72
	5-0	#4 at 72	#4 at 72	#4 at 72
	6-0	#4 at 72	#4 at 72	#5 at 72
	7-0	#4 at 72	#5 at 72	#6 at 72
	8-0	#5 at 72	#6 at 72	#8 at 72
8-8	4 (or less)	#4 at 72	#4 at 72	#4 at 72
	5-0	#4 at 72	#4 at 72	#4 at 72
	6-0	#4 at 72	#4 at 72	#5 at 72
	7-0	#4 at 72	#5 at 72	#6 at 72
	8-8[e]	#5 at 72	#7 at 72	#8 at 72
9-4	4 (or less)	#4 at 72	#4 at 72	#4 at 72
	5-0	#4 at 72	#4 at 72	#4 at 72
	6-0	#4 at 72	#5 at 72	#5 at 72
	7-0	#4 at 72	#5 at 72	#6 at 72
	8-0	#5 at 72	#6 at 72	#7 at 72
	9-4[e]	#6 at 72	#7 at 72	#8 at 72
10-0	4 (or less)	#4 at 72	#4 at 72	#4 at 72
	5-0	#4 at 72	#4 at 72	#4 at 72
	6-0	#4 at 72	#5 at 72	#5 at 72
	7-0	#4 at 72	#6 at 72	#6 at 72
	8-0	#5 at 72	#6 at 72	#7 at 72
	9-0[e]	#6 at 72	#7 at 72	#8 at 72
	10-0[e]	#7 at 72	#8 at 72	#9 at 72

For SI: 1 inch = 25.4 mm, 1 foot = 304.8 mm, 1 pound per square foot per foot = 0.157 kPa/m.

a. For design lateral soil loads, see Section 1610.

b. Provisions for this table are based on design and construction requirements specified in Section 1807.1.6.3.

c. For alternative reinforcement, see Section 1807.1.6.3.1.

d. For height of unbalanced backfill, see Section 1807.1.2.

e Where unbalanced backfill height exceeds 8 feet and design lateral soil loads from Table 1610.1 are used, the requirements for 30 and 45 psf per foot of depth are not applicable. See Section 1610.

2013

b = Diameter of round post or footing or diagonal dimension of square post or footing, feet (m).

d = Depth of embedment in earth in feet (m) but not over 12 feet (3658 mm) for purpose of computing lateral pressure.

h = Distance in feet (m) from ground surface to point of application of "P."

P = Applied lateral force in pounds (kN).

S_1 = Allowable lateral soil-bearing pressure as set forth in Section 1806.2 based on a depth of one-third the depth of embedment in pounds per square foot (psf) (kPa).

1807.3.2.2 Constrained. The following formula shall be used to determine the depth of embedment required to resist lateral loads where lateral constraint is provided at the ground surface, such as by a rigid floor or pavement.

$$d = \sqrt{\frac{4.25Ph}{S_3 b}} \qquad \textbf{(Equation 18-2)}$$

or alternatively

$$d = \sqrt{\frac{4.25M_g}{S_3 b}} \qquad \textbf{(Equation 18-3)}$$

where:

M_g = Moment in the post at grade, in foot-pounds (kN-m).

S_3 = Allowable lateral soil-bearing pressure as set forth in Section 1806.2 based on a depth equal to the depth of embedment in pounds per square foot (kPa).

1807.3.2.3 Vertical load. The resistance to vertical loads shall be determined using the vertical foundation pressure set forth in Table 1806.2.

1807.3.3 Backfill. The backfill in the annular space around columns not embedded in poured footings shall be by one of the following methods:

1. Backfill shall be of concrete with a specified compressive strength of not less than 2,000 psi (13.8 MPa). The hole shall not be less than 4 inches (102 mm) larger than the diameter of the column at its bottom or 4 inches (102 mm) larger than the diagonal dimension of a square or rectangular column.
2. Backfill shall be of clean sand. The sand shall be thoroughly compacted by tamping in layers not more than 8 inches (203 mm) in depth.
3. Backfill shall be of controlled low-strength material (CLSM).

SECTION 1808
FOUNDATIONS

1808.1 General. Foundations shall be designed and constructed in accordance with Sections 1808.2 through 1808.9. Shallow foundations shall also satisfy the requirements of Section 1809. Deep foundations shall also satisfy the requirements of Section 1810.

1808.2 Design for capacity and settlement. Foundations shall be so designed that the allowable bearing capacity of the soil is not exceeded, and that differential settlement is minimized. Foundations in areas with expansive soils shall be designed in accordance with the provisions of Section 1808.6.

1808.3 Design loads. Foundations shall be designed for the most unfavorable effects due to the combinations of loads specified in Section 1605.2 or 1605.3. The dead load is permitted to include the weight of foundations and overlying fill. Reduced live loads, as specified in Sections 1607.10 and 1607.12, shall be permitted to be used in the design of foundations.

1808.3.1 Seismic overturning. Where foundations are proportioned using the load combinations of Section 1605.2 or 1605.3.1, and the computation of seismic overturning effects is by equivalent lateral force analysis or modal analysis, the proportioning shall be in accordance with Section 12.13.4 of ASCE 7.

1808.3.2 Surcharge. No fill or other surcharge loads shall be placed adjacent to any building or structure unless such building or structure is capable of withstanding the additional loads caused by the fill or the surcharge. Existing footings or foundations that will be affected by any excavation shall be underpinned or otherwise protected against settlement and shall be protected against detrimental lateral or vertical movement or both.

Exception: Minor grading for landscaping purposes shall be permitted where done with walk-behind equipment, where the grade is not increased more than 1 foot (305 mm) from original design grade or where *approved* by the *building official.*

1808.4 Vibratory loads. Where machinery operations or other vibrations are transmitted through the foundation, consideration shall be given in the foundation design to prevent detrimental disturbances of the soil.

1808.5 Shifting or moving soils. Where it is known that the shallow subsoils are of a shifting or moving character, foundations shall be carried to a sufficient depth to ensure stability.

1808.6 Design for expansive soils. Foundations for buildings and structures founded on expansive soils shall be designed in accordance with Section 1808.6.1 or 1808.6.2.

Exception: Foundation design need not comply with Section 1808.6.1 or 1808.6.2 where one of the following conditions is satisfied:

1. The soil is removed in accordance with Section 1808.6.3.
2. The *building official* approves stabilization of the soil in accordance with Section 1808.6.4.

1808.6.1 Foundations. Foundations placed on or within the active zone of expansive soils shall be designed to resist differential volume changes and to prevent structural damage to the supported structure. Deflection and racking

of the supported structure shall be limited to that which will not interfere with the usability and serviceability of the structure.

Foundations placed below where volume change occurs or below expansive soil shall comply with the following provisions:

1. Foundations extending into or penetrating expansive soils shall be designed to prevent uplift of the supported structure.
2. Foundations penetrating expansive soils shall be designed to resist forces exerted on the foundation due to soil volume changes or shall be isolated from the expansive soil.

1808.6.2 Slab-on-ground foundations. Moments, shears and deflections for use in designing slab-on-ground, mat or raft foundations on expansive soils shall be determined in accordance with *WRI/CRSI Design of Slab-on-Ground Foundations* or *PTI DC 10.5*. Using the moments, shears and deflections determined above, nonprestressed slabs-on-ground, mat or raft foundations on expansive soils shall be designed in accordance with *WRI/CRSI Design of Slab-on-Ground Foundations* and post-tensioned slab-on-ground, mat or raft foundations on expansive soils shall be designed in accordance with *PTI DC 10.5*. It shall be permitted to analyze and design such slabs by other methods that account for soil-structure interaction, the deformed shape of the soil support, the plate or stiffened plate action of the slab as well as both center lift and edge lift conditions. Such alternative methods shall be rational and the basis for all aspects and parameters of the method shall be available for peer review.

1808.6.3 Removal of expansive soil. Where expansive soil is removed in lieu of designing foundations in accordance with Section 1808.6.1 or 1808.6.2, the soil shall be removed to a depth sufficient to ensure a constant moisture content in the remaining soil. Fill material shall not contain expansive soils and shall comply with Section 1804.5 or 1804.6.

Exception: Expansive soil need not be removed to the depth of constant moisture, provided the confining pressure in the expansive soil created by the fill and supported structure exceeds the swell pressure.

1808.6.4 Stabilization. Where the active zone of expansive soils is stabilized in lieu of designing foundations in accordance with Section 1808.6.1 or 1808.6.2, the soil shall be stabilized by chemical, dewatering, presaturation or equivalent techniques.

1808.7 Foundations on or adjacent to slopes. The placement of buildings and structures on or adjacent to slopes steeper than one unit vertical in three units horizontal (33.3-percent slope) shall comply with Sections 1808.7.1 through 1808.7.5.

1808.7.1 Building clearance from ascending slopes. In general, buildings below slopes shall be set a sufficient distance from the slope to provide protection from slope drainage, erosion and shallow failures. Except as provided in Section 1808.7.5 and Figure 1808.7.1, the following criteria will be assumed to provide this protection. Where the existing slope is steeper than one unit vertical in one unit horizontal (100-percent slope), the toe of the slope shall be assumed to be at the intersection of a horizontal plane drawn from the top of the foundation and a plane drawn tangent to the slope at an angle of 45 degrees (0.79 rad) to the horizontal. Where a retaining wall is constructed at the toe of the slope, the height of the slope shall be measured from the top of the wall to the top of the slope.

1808.7.2 Foundation setback from descending slope surface. Foundations on or adjacent to slope surfaces shall be founded in firm material with an embedment and set back from the slope surface sufficient to provide vertical and lateral support for the foundation without detrimental settlement. Except as provided for in Section 1808.7.5 and Figure 1808.7.1, the following setback is deemed adequate to meet the criteria. Where the slope is steeper than 1 unit vertical in 1 unit horizontal (100-percent slope), the required setback shall be measured from an imaginary plane 45 degrees (0.79 rad) to the horizontal, projected upward from the toe of the slope.

1808.7.3 Pools. The setback between pools regulated by this code and slopes shall be equal to one-half the building footing setback distance required by this section. That portion of the pool wall within a horizontal distance of 7 feet (2134 mm) from the top of the slope shall be capable of supporting the water in the pool without soil support.

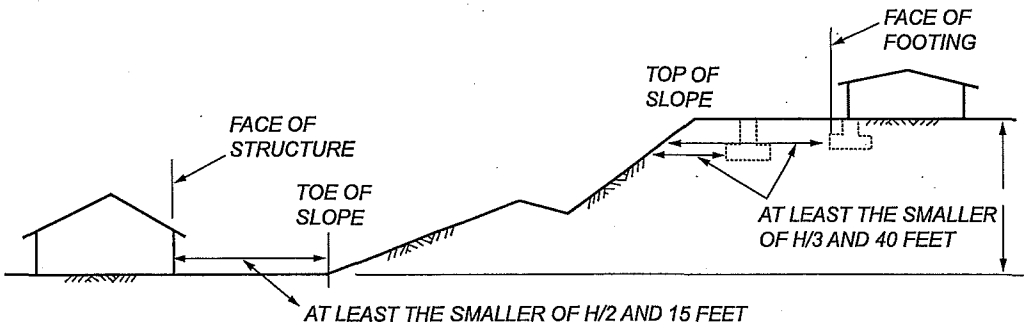

For SI: 1 foot = 304.8 mm.

FIGURE 1808.7.1
FOUNDATION CLEARANCES FROM SLOPES

2015

1808.7.4 Foundation elevation. On graded sites, the top of any exterior foundation shall extend above the elevation of the street gutter at point of discharge or the inlet of an *approved* drainage device a minimum of 12 inches (305 mm) plus 2 percent. Alternate elevations are permitted subject to the approval of the *building official*, provided it can be demonstrated that required drainage to the point of discharge and away from the structure is provided at all locations on the site.

1808.7.5 Alternate setback and clearance. Alternate setbacks and clearances are permitted, subject to the approval of the *building official*. The *building official* shall be permitted to require a geotechnical investigation as set forth in Section 1803.5.10.

1808.8 Concrete foundations. The design, materials and construction of concrete foundations shall comply with Sections 1808.8.1 through 1808.8.6 and the provisions of Chapter 19.

Exception: Where concrete footings supporting walls of light-frame construction are designed in accordance with Table 1809.7, a specific design in accordance with Chapter 19 is not required.

1808.8.1 Concrete or grout strength and mix proportioning. Concrete or grout in foundations shall have a specified compressive strength (f'_c) not less than the largest applicable value indicated in Table 1808.8.1.

Where concrete is placed through a funnel hopper at the top of a deep foundation element, the concrete mix shall be designed and proportioned so as to produce a cohesive workable mix having a slump of not less than 4 inches (102 mm) and not more than 8 inches (204 mm). Where concrete or grout is to be pumped, the mix design including slump shall be adjusted to produce a pumpable mixture.

1808.8.2 Concrete cover. The concrete cover provided for prestressed and nonprestressed reinforcement in foundations shall be no less than the largest applicable value specified in Table 1808.8.2. Longitudinal bars spaced less than $1^1/_2$ inches (38 mm) clear distance apart shall be considered bundled bars for which the concrete cover provided shall also be no less than that required by Section 20.8.1.3.4 of ACI 318. Concrete cover shall be measured from the concrete surface to the outermost surface of the steel to which the cover requirement applies. Where concrete is placed in a temporary or permanent casing or a mandrel, the inside face of the casing or mandrel shall be considered the concrete surface.

1808.8.3 Placement of concrete. Concrete shall be placed in such a manner as to ensure the exclusion of any foreign

TABLE 1808.8.1
MINIMUM SPECIFIED COMPRESSIVE STRENGTH f'_c OF CONCRETE OR GROUT

FOUNDATION ELEMENT OR CONDITION	SPECIFIED COMPRESSIVE STRENGTH, f'_c
1. Foundations for structures assigned to Seismic Design Category A, B or C	2,500 psi
2a. Foundations for Group R or U occupancies of light-frame construction, two stories or less in height, assigned to Seismic Design Category D, E or F	2,500 psi
2b. Foundations for other structures assigned to Seismic Design Category D, E or F	3,000 psi
3. Precast nonprestressed driven piles	4,000 psi
4. Socketed drilled shafts	4,000 psi
5. Micropiles	4,000 psi
6. Precast prestressed driven piles	5,000 psi

For SI: 1 pound per square inch = 0.00689 MPa.

TABLE 1808.8.2
MINIMUM CONCRETE COVER

FOUNDATION ELEMENT OR CONDITION	MINIMUM COVER
1. Shallow foundations	In accordance with Section 20.8 of ACI 318
2. Precast nonprestressed deep foundation elements	
Exposed to seawater	3 inches
Not manufactured under plant conditions	2 inches
Manufactured under plant control conditions	In accordance with Section 20.8.1.3.3 of ACI 318
3. Precast prestressed deep foundation elements	
Exposed to seawater	2.5 inches
Other	In accordance with Section 20.8.1.3.3 of ACI 318
4. Cast-in-place deep foundation elements not enclosed by a steel pipe, tube or permanent casing	2.5 inches
5. Cast-in-place deep foundation elements enclosed by a steel pipe, tube or permanent casing	1 inch
6. Structural steel core within a steel pipe, tube or permanent casing	2 inches
7. Cast-in-place drilled shafts enclosed by a stable rock socket	1.5 inches

For SI: 1 inch = 25.4 mm.

matter and to secure a full-size foundation. Concrete shall not be placed through water unless a tremie or other method *approved* by the *building official* is used. Where placed under or in the presence of water, the concrete shall be deposited by *approved* means to ensure minimum segregation of the mix and negligible turbulence of the water. Where depositing concrete from the top of a deep foundation element, the concrete shall be chuted directly into smooth-sided pipes or tubes or placed in a rapid and continuous operation through a funnel hopper centered at the top of the element.

1808.8.4 Protection of concrete. Concrete foundations shall be protected from freezing during depositing and for a period of not less than five days thereafter. Water shall not be allowed to flow through the deposited concrete.

1808.8.5 Forming of concrete. Concrete foundations are permitted to be cast against the earth where, in the opinion of the *building official*, soil conditions do not require formwork. Where formwork is required, it shall be in accordance with Section 26.10 of ACI 318.

1808.8.6 Seismic requirements. See Section 1905 for additional requirements for foundations of structures assigned to *Seismic Design Category* C, D, E or F.

For structures assigned to *Seismic Design Category* D, E or F, provisions of Section 18.13 of ACI 318 shall apply where not in conflict with the provisions of Sections 1808 through 1810.

Exceptions:

1. Detached one- and two-family dwellings of light-frame construction and two stories or less above *grade plane* are not required to comply with the provisions of Section 18.13 of ACI 318.
2. Section 18.13.4.3(a) of ACI 318 shall not apply.

1808.9 Vertical masonry foundation elements. Vertical masonry foundation elements that are not foundation piers as defined in Section 202 shall be designed as piers, walls or columns, as applicable, in accordance with TMS 402/ACI 530/ASCE 5.

SECTION 1809
SHALLOW FOUNDATIONS

1809.1 General. Shallow foundations shall be designed and constructed in accordance with Sections 1809.2 through 1809.13.

1809.2 Supporting soils. Shallow foundations shall be built on undisturbed soil, compacted fill material or controlled low-strength material (CLSM). Compacted fill material shall be placed in accordance with Section 1804.5. CLSM shall be placed in accordance with Section 1804.6.

1809.3 Stepped footings. The top surface of footings shall be level. The bottom surface of footings shall be permitted to have a slope not exceeding one unit vertical in 10 units horizontal (10-percent slope). Footings shall be stepped where it is necessary to change the elevation of the top surface of the footing or where the surface of the ground slopes more than one unit vertical in 10 units horizontal (10-percent slope).

1809.4 Depth and width of footings. The minimum depth of footings below the undisturbed ground surface shall be 12 inches (305 mm). Where applicable, the requirements of Section 1809.5 shall also be satisfied. The minimum width of footings shall be 12 inches (305 mm).

1809.5 Frost protection. Except where otherwise protected from frost, foundations and other permanent supports of buildings and structures shall be protected from frost by one or more of the following methods:

1. Extending below the frost line of the locality.
2. Constructing in accordance with ASCE 32.
3. Erecting on solid rock.

Exception: Free-standing buildings meeting all of the following conditions shall not be required to be protected:

1. Assigned to *Risk Category* I.
2. Area of 600 square feet (56 m^2) or less for light-frame construction or 400 square feet (37 m^2) or less for other than light-frame construction.
3. Eave height of 10 feet (3048 mm) or less.

Shallow foundations shall not bear on frozen soil unless such frozen condition is of a permanent character.

1809.6 Location of footings. Footings on granular soil shall be so located that the line drawn between the lower edges of adjoining footings shall not have a slope steeper than 30 degrees (0.52 rad) with the horizontal, unless the material supporting the higher footing is braced or retained or otherwise laterally supported in an *approved* manner or a greater slope has been properly established by engineering analysis.

1809.7 Prescriptive footings for light-frame construction. Where a specific design is not provided, concrete or masonry-unit footings supporting walls of light-frame construction shall be permitted to be designed in accordance with Table 1809.7.

TABLE 1809.7
PRESCRIPTIVE FOOTINGS SUPPORTING WALLS OF LIGHT-FRAME CONSTRUCTION[a, b, c, d, e]

NUMBER OF FLOORS SUPPORTED BY THE FOOTING[f]	WIDTH OF FOOTING (inches)	THICKNESS OF FOOTING (inches)
1	12	6
2	15	6
3	18	8[g]

For SI: 1 inch = 25.4 mm, 1 foot = 304.8 mm.

a. Depth of footings shall be in accordance with Section 1809.4.

b. The ground under the floor shall be permitted to be excavated to the elevation of the top of the footing.

c. Interior stud-bearing walls shall be permitted to be supported by isolated footings. The footing width and length shall be twice the width shown in this table, and footings shall be spaced not more than 6 feet on center.

d. See Section 1905 for additional requirements for concrete footings of structures assigned to Seismic Design Category C, D, E or F.

e. For thickness of foundation walls, see Section 1807.1.6.

f. Footings shall be permitted to support a roof in addition to the stipulated number of floors. Footings supporting roof only shall be as required for supporting one floor.

g. Plain concrete footings for Group R-3 occupancies shall be permitted to be 6 inches thick.

1809.8 Plain concrete footings. The edge thickness of plain concrete footings supporting walls of other than light-frame construction shall not be less than 8 inches (203 mm) where placed on soil or rock.

Exception: For plain concrete footings supporting Group R-3 occupancies, the edge thickness is permitted to be 6 inches (152 mm), provided that the footing does not extend beyond a distance greater than the thickness of the footing on either side of the supported wall.

1809.9 Masonry-unit footings. The design, materials and construction of masonry-unit footings shall comply with Sections 1809.9.1 and 1809.9.2, and the provisions of Chapter 21.

Exception: Where a specific design is not provided, masonry-unit footings supporting walls of light-frame construction shall be permitted to be designed in accordance with Table 1809.7.

1809.9.1 Dimensions. Masonry-unit footings shall be laid in Type M or S mortar complying with Section 2103.2.1 and the depth shall not be less than twice the projection beyond the wall, pier or column. The width shall not be less than 8 inches (203 mm) wider than the wall supported thereon.

1809.9.2 Offsets. The maximum offset of each course in brick foundation walls stepped up from the footings shall be $1^1/_2$ inches (38 mm) where laid in single courses, and 3 inches (76 mm) where laid in double courses.

1809.10 Pier and curtain wall foundations. Except in *Seismic Design Categories* D, E and F, pier and curtain wall foundations shall be permitted to be used to support light-frame construction not more than two *stories above grade plane*, provided the following requirements are met:

1. All load-bearing walls shall be placed on continuous concrete footings bonded integrally with the *exterior wall* footings.
2. The minimum actual thickness of a load-bearing masonry wall shall not be less than 4 inches (102 mm) nominal or $3^5/_8$ inches (92 mm) actual thickness, and shall be bonded integrally with piers spaced 6 feet (1829 mm) on center (o.c.).
3. Piers shall be constructed in accordance with Chapter 21 and the following:
   - 3.1. The unsupported height of the masonry piers shall not exceed 10 times their least dimension.
   - 3.2. Where structural clay tile or hollow concrete masonry units are used for piers supporting beams and girders, the cellular spaces shall be filled solidly with concrete or Type M or S mortar.

     Exception: Unfilled hollow piers shall be permitted where the unsupported height of the pier is not more than four times its least dimension.
   - 3.3. Hollow piers shall be capped with 4 inches (102 mm) of solid masonry or concrete or the cavities of the top course shall be filled with concrete or grout.
4. The maximum height of a 4-inch (102 mm) load-bearing masonry foundation wall supporting wood frame walls and floors shall not be more than 4 feet (1219 mm) in height.
5. The unbalanced fill for 4-inch (102 mm) foundation walls shall not exceed 24 inches (610 mm) for solid masonry, nor 12 inches (305 mm) for hollow masonry.

1809.11 Steel grillage footings. Grillage footings of *structural steel elements* shall be separated with *approved* steel spacers and be entirely encased in concrete with at least 6 inches (152 mm) on the bottom and at least 4 inches (102 mm) at all other points. The spaces between the shapes shall be completely filled with concrete or cement grout.

1809.12 Timber footings. Timber footings shall be permitted for buildings of Type V construction and as otherwise *approved* by the *building official*. Such footings shall be treated in accordance with AWPA U1 (Commodity Specification A, Use Category 4B). Treated timbers are not required where placed entirely below permanent water level, or where used as capping for wood piles that project above the water level over submerged or marsh lands. The compressive stresses perpendicular to grain in untreated timber footings supported upon treated piles shall not exceed 70 percent of the allowable stresses for the species and grade of timber as specified in the AF&PA NDS.

1809.13 Footing seismic ties. Where a structure is assigned to *Seismic Design Category* D, E or F, individual spread footings founded on soil defined in Section 1613.3.2 as *Site Class* E or F shall be interconnected by ties. Unless it is demonstrated that equivalent restraint is provided by reinforced concrete beams within slabs on grade or reinforced concrete slabs on grade, ties shall be capable of carrying, in tension or compression, a force equal to the lesser of the product of the larger footing design gravity load times the seismic coefficient, S_{DS}, divided by 10 and 25 percent of the smaller footing design gravity load.

SECTION 1810
DEEP FOUNDATIONS

1810.1 General. Deep foundations shall be analyzed, designed, detailed and installed in accordance with Sections 1810.1 through 1810.4.

1810.1.1 Geotechnical investigation. Deep foundations shall be designed and installed on the basis of a geotechnical investigation as set forth in Section 1803.

1810.1.2 Use of existing deep foundation elements. Deep foundation elements left in place where a structure has been demolished shall not be used for the support of new construction unless satisfactory evidence is submitted to the *building official*, which indicates that the elements are sound and meet the requirements of this code. Such elements shall be load tested or redriven to verify their capacities. The design load applied to such elements shall be the lowest allowable load as determined by tests or redriving data.

1810.1.3 Deep foundation elements classified as columns. Deep foundation elements standing unbraced in air, water or fluid soils shall be classified as columns and designed as such in accordance with the provisions of this code from their top down to the point where adequate lateral support is provided in accordance with Section 1810.2.1.

Exception: Where the unsupported height to least horizontal dimension of a cast-in-place deep foundation element does not exceed three, it shall be permitted to design and construct such an element as a pedestal in accordance with ACI 318.

1810.1.4 Special types of deep foundations. The use of types of deep foundation elements not specifically mentioned herein is permitted, subject to the approval of the *building official*, upon the submission of acceptable test data, calculations and other information relating to the structural properties and load capacity of such elements. The allowable stresses for materials shall not in any case exceed the limitations specified herein.

1810.2 Analysis. The analysis of deep foundations for design shall be in accordance with Sections 1810.2.1 through 1810.2.5.

1810.2.1 Lateral support. Any soil other than fluid soil shall be deemed to afford sufficient lateral support to prevent buckling of deep foundation elements and to permit the design of the elements in accordance with accepted engineering practice and the applicable provisions of this code.

Where deep foundation elements stand unbraced in air, water or fluid soils, it shall be permitted to consider them laterally supported at a point 5 feet (1524 mm) into stiff soil or 10 feet (3048 mm) into soft soil unless otherwise *approved* by the *building official* on the basis of a geotechnical investigation by a *registered design professional.*

1810.2.2 Stability. Deep foundation elements shall be braced to provide lateral stability in all directions. Three or more elements connected by a rigid cap shall be considered braced, provided that the elements are located in radial directions from the centroid of the group not less than 60 degrees (1 rad) apart. A two-element group in a rigid cap shall be considered to be braced along the axis connecting the two elements. Methods used to brace deep foundation elements shall be subject to the approval of the *building official.*

Deep foundation elements supporting walls shall be placed alternately in lines spaced at least 1 foot (305 mm) apart and located symmetrically under the center of gravity of the wall load carried, unless effective measures are taken to provide for eccentricity and lateral forces, or the foundation elements are adequately braced to provide for lateral stability.

Exceptions:

1. Isolated cast-in-place deep foundation elements without lateral bracing shall be permitted where the least horizontal dimension is no less than 2 feet (610 mm), adequate lateral support in accordance with Section 1810.2.1 is provided for the entire height and the height does not exceed 12 times the least horizontal dimension.
2. A single row of deep foundation elements without lateral bracing is permitted for one- and two-family dwellings and lightweight construction not exceeding two *stories above grade plane* or 35 feet (10 668 mm) in *building height*, provided the centers of the elements are located within the width of the supported wall.

1810.2.3 Settlement. The settlement of a single deep foundation element or group thereof shall be estimated based on *approved* methods of analysis. The predicted settlement shall cause neither harmful distortion of, nor instability in, the structure, nor cause any element to be loaded beyond its capacity.

1810.2.4 Lateral loads. The moments, shears and lateral deflections used for design of deep foundation elements shall be established considering the nonlinear interaction of the shaft and soil, as determined by a *registered design professional.* Where the ratio of the depth of embedment of the element to its least horizontal dimension is less than or equal to six, it shall be permitted to assume the element is rigid.

1810.2.4.1 Seismic Design Categories D through F. For structures assigned to *Seismic Design Category* D, E or F, deep foundation elements on *Site Class* E or F sites, as determined in Section 1613.3.2, shall be designed and constructed to withstand maximum imposed curvatures from earthquake ground motions and structure response. Curvatures shall include free-field soil strains modified for soil-foundation-structure interaction coupled with foundation element deformations associated with earthquake loads imparted to the foundation by the structure.

Exception: Deep foundation elements that satisfy the following additional detailing requirements shall be deemed to comply with the curvature capacity requirements of this section.

1. Precast prestressed concrete piles detailed in accordance with Section 1810.3.8.3.3.
2. Cast-in-place deep foundation elements with a minimum longitudinal reinforcement ratio of 0.005 extending the full length of the element and detailed in accordance with Sections 18.7.5.2, 18.7.5.3 and 18.7.5.4 of ACI 318 as required by Section 1810.3.9.4.2.2.

1810.2.5 Group effects. The analysis shall include group effects on lateral behavior where the center-to-center spacing of deep foundation elements in the direction of lateral force is less than eight times the least horizontal dimension of an element. The analysis shall include group effects on axial behavior where the center-to-center spacing of deep foundation elements is less than three times the least horizontal dimension of an element. Group effects shall be evaluated using a generally accepted method of analysis; the analysis for uplift of grouped elements with center-to-center spacing less than three times

the least horizontal dimension of an element shall be evaluated in accordance with Section 1810.3.3.1.6.

1810.3 Design and detailing. Deep foundations shall be designed and detailed in accordance with Sections 1810.3.1 through 1810.3.12.

1810.3.1 Design conditions. Design of deep foundations shall include the design conditions specified in Sections 1810.3.1.1 through 1810.3.1.6, as applicable.

1810.3.1.1 Design methods for concrete elements. Where concrete deep foundations are laterally supported in accordance with Section 1810.2.1 for the entire height and applied forces cause bending moments no greater than those resulting from accidental eccentricities, structural design of the element using the load combinations of Section 1605.3 and the allowable stresses specified in this chapter shall be permitted. Otherwise, the structural design of concrete deep foundation elements shall use the load combinations of Section 1605.2 and *approved* strength design methods.

1810.3.1.2 Composite elements. Where a single deep foundation element comprises two or more sections of different materials or different types spliced together, each section of the composite assembly shall satisfy the applicable requirements of this code, and the maximum allowable load in each section shall be limited by the structural capacity of that section.

1810.3.1.3 Mislocation. The foundation or superstructure shall be designed to resist the effects of the mislocation of any deep foundation element by no less than 3 inches (76 mm). To resist the effects of mislocation, compressive overload of deep foundation elements to 110 percent of the allowable design load shall be permitted.

1810.3.1.4 Driven piles. Driven piles shall be designed and manufactured in accordance with accepted engineering practice to resist all stresses induced by handling, driving and service loads.

1810.3.1.5 Helical piles. Helical piles shall be designed and manufactured in accordance with accepted engineering practice to resist all stresses induced by installation into the ground and service loads.

1810.3.1.6 Casings. Temporary and permanent casings shall be of steel and shall be sufficiently strong to resist collapse and sufficiently water tight to exclude any foreign materials during the placing of concrete. Where a permanent casing is considered reinforcing steel, the steel shall be protected under the conditions specified in Section 1810.3.2.5. Horizontal joints in the casing shall be spliced in accordance with Section 1810.3.6.

1810.3.2 Materials. The materials used in deep foundation elements shall satisfy the requirements of Sections 1810.3.2.1 through 1810.3.2.8, as applicable.

1810.3.2.1 Concrete. Where concrete is cast in a steel pipe or where an enlarged base is formed by compacting concrete, the maximum size for coarse aggregate shall be $^3/_4$ inch (19.1 mm). Concrete to be compacted shall have a zero slump.

1810.3.2.1.1 Seismic hooks. For structures assigned to *Seismic Design Category* C, D, E or F, the ends of hoops, spirals and ties used in concrete deep foundation elements shall be terminated with seismic hooks, as defined in ACI 318, and shall be turned into the confined concrete core.

1810.3.2.1.2 ACI 318 Equation (25.8.3.3). Where this chapter requires detailing of concrete deep foundation elements in accordance with Section 18.7.5.4 of ACI 318, compliance with Equation (25.8.3.3) of ACI 318 shall not be required.

1810.3.2.2 Prestressing steel. Prestressing steel shall conform to ASTM A 416.

1810.3.2.3 Steel. Structural steel H-piles and structural steel sheet piling shall conform to the material requirements in ASTM A 6. Steel pipe piles shall conform to the material requirements in ASTM A 252. Fully welded steel piles shall be fabricated from plates that conform to the material requirements in ASTM A 36, ASTM A 283, ASTM A 572, ASTM A 588 or ASTM A 690.

1810.3.2.4 Timber. Timber deep foundation elements shall be designed as piles or poles in accordance with AF&PA NDS. Round timber elements shall conform to ASTM D 25. Sawn timber elements shall conform to DOC PS-20.

1810.3.2.4.1 Preservative treatment. Timber deep foundation elements used to support permanent structures shall be treated in accordance with this section unless it is established that the tops of the untreated timber elements will be below the lowest ground-water level assumed to exist during the life of the structure. Preservative and minimum final retention shall be in accordance with AWPA U1 (Commodity Specification E, Use Category 4C) for round timber elements and AWPA U1 (Commodity Specification A, Use Category 4B) for sawn timber elements. Preservative-treated timber elements shall be subject to a quality control program administered by an *approved agency*. Element cutoffs shall be treated in accordance with AWPA M4.

1810.3.2.5 Protection of materials. Where boring records or site conditions indicate possible deleterious action on the materials used in deep foundation elements because of soil constituents, changing water levels or other factors, the elements shall be adequately protected by materials, methods or processes *approved* by the *building official*. Protective materials shall be applied to the elements so as not to be rendered ineffective by installation. The effectiveness of such protective measures for the particular purpose shall have been thoroughly established by satisfactory service records or other evidence.

1810.3.2.6 Allowable stresses. The allowable stresses for materials used in deep foundation elements shall not exceed those specified in Table 1810.3.2.6.

1810.3.2.7 Increased allowable compressive stress for cased cast-in-place elements. The allowable compressive stress in the concrete shall be permitted to be increased as specified in Table 1810.3.2.6 for those portions of permanently cased cast-in-place elements that satisfy all of the following conditions:

1. The design shall not use the casing to resist any portion of the axial load imposed.
2. The casing shall have a sealed tip and be mandrel driven.
3. The thickness of the casing shall not be less than manufacturer's standard gage No.14 (0.068 inch) (1.75 mm).
4. The casing shall be seamless or provided with seams of strength equal to the basic material and be of a configuration that will provide confinement to the cast-in-place concrete.
5. The ratio of steel yield strength (F_y) to specified compressive strength (f'_c) shall not be less than six.
6. The nominal diameter of the element shall not be greater than 16 inches (406 mm).

1810.3.2.8 Justification of higher allowable stresses. Use of allowable stresses greater than those specified in Section 1810.3.2.6 shall be permitted where supporting data justifying such higher stresses is filed with the *building official*. Such substantiating data shall include the following:

1. A geotechnical investigation in accordance with Section 1803.
2. Load tests in accordance with Section 1810.3.3.1.2, regardless of the load supported by the element.

The design and installation of the deep foundation elements shall be under the direct supervision of a *registered design professional* knowledgeable in the field of soil mechanics and deep foundations who shall submit a report to the *building official* stating that the elements as installed satisfy the design criteria.

1810.3.3 Determination of allowable loads. The allowable axial and lateral loads on deep foundation elements shall be determined by an *approved* formula, load tests or method of analysis.

1810.3.3.1 Allowable axial load. The allowable axial load on a deep foundation element shall be determined in accordance with Sections 1810.3.3.1.1 through 1810.3.3.1.9.

1810.3.3.1.1 Driving criteria. The allowable compressive load on any driven deep foundation element where determined by the application of an *approved* driving formula shall not exceed 40 tons (356 kN). For allowable loads above 40 tons (356 kN), the wave equation method of analysis shall be used to

TABLE 1810.3.2.6
ALLOWABLE STRESSES FOR MATERIALS USED IN DEEP FOUNDATION ELEMENTS

MATERIAL TYPE AND CONDITION	MAXIMUM ALLOWABLE STRESS[a]
1. Concrete or grout in compression[b]	
Cast-in-place with a permanent casing in accordance with Section 1810.3.2.7	$0.4f'_c$
Cast-in-place in a pipe, tube, other permanent casing or rock	$0.33f'_c$
Cast-in-place without a permanent casing	$0.3f'_c$
Precast nonprestressed	$0.33f'_c$
Precast prestressed	$0.33f'_c - 0.27f_{pc}$
2. Nonprestressed reinforcement in compression	$0.4f_y \leq 30{,}000$ psi
3. Steel in compression	
Cores within concrete-filled pipes or tubes	$0.5\,F_y \leq 32{,}000$ psi
Pipes, tubes or H-piles, where justified in accordance with Section 1810.3.2.8	$0.5\,F_y \leq 32{,}000$ psi
Pipes or tubes for micropiles	$0.4\,F_y \leq 32{,}000$ psi
Other pipes, tubes or H-piles	$0.35\,F_y \leq 16{,}000$ psi
Helical piles	$0.6\,F_y \leq 0.5\,F_u$
4. Nonprestressed reinforcement in tension	
Within micropiles	$0.6f_y$
Other conditions	$0.5f_y \leq 24{,}000$ psi
5. Steel in tension	
Pipes, tubes or H-piles, where justified in accordance with Section 1810.3.2.8	$0.5\,F_y \leq 32{,}000$ psi
Other pipes, tubes or H-piles	$0.35\,F_y \leq 16{,}000$ psi
Helical piles	$0.6\,F_y \leq 0.5\,F_u$
6. Timber	In accordance with the AWC NDS

a. f'_c is the specified compressive strength of the concrete or grout; f_{pc} is the compressive stress on the gross concrete section due to effective prestress forces only; f_y is the specified yield strength of reinforcement; F_y is the specified minimum yield stress of steel; F_u is the specified minimum tensile stress of structural steel.

b. The stresses specified apply to the gross cross-sectional area within the concrete surface. Where a temporary or permanent casing is used, the inside face of the casing shall be considered the concrete surface.

estimate driveability for both driving stresses and net displacement per blow at the ultimate load. Allowable loads shall be verified by load tests in accordance with Section 1810.3.3.1.2. The formula or wave equation load shall be determined for gravity-drop or power-actuated hammers and the hammer energy used shall be the maximum consistent with the size, strength and weight of the driven elements. The use of a follower is permitted only with the approval of the *building official*. The introduction of fresh hammer cushion or pile cushion material just prior to final penetration is not permitted.

1810.3.3.1.2 Load tests. Where design compressive loads are greater than those determined using the allowable stresses specified in Section 1810.3.2.6, where the design load for any deep foundation element is in doubt, or where cast-in-place deep foundation elements have an enlarged base formed either by compacting concrete or by driving a precast base, control test elements shall be tested in accordance with ASTM D 1143 or ASTM D 4945. At least one element shall be load tested in each area of uniform subsoil conditions. Where required by the *building official*, additional elements shall be load tested where necessary to establish the safe design capacity. The resulting allowable loads shall not be more than one-half of the ultimate axial load capacity of the test element as assessed by one of the published methods listed in Section 1810.3.3.1.3 with consideration for the test type, duration and subsoil. The ultimate axial load capacity shall be determined by a *registered design professional* with consideration given to tolerable total and differential settlements at design load in accordance with Section 1810.2.3. In subsequent installation of the balance of deep foundation elements, all elements shall be deemed to have a supporting capacity equal to that of the control element where such elements are of the same type, size and relative length as the test element; are installed using the same or comparable methods and equipment as the test element; are installed in similar subsoil conditions as the test element; and, for driven elements, where the rate of penetration (e.g., net displacement per blow) of such elements is equal to or less than that of the test element driven with the same hammer through a comparable driving distance.

1810.3.3.1.3 Load test evaluation methods. It shall be permitted to evaluate load tests of deep foundation elements using any of the following methods:

1. Davisson Offset Limit.
2. Brinch-Hansen 90-percent Criterion.
3. Butler-Hoy Criterion.
4. Other methods *approved* by the *building official*.

1810.3.3.1.4 Allowable frictional resistance. The assumed frictional resistance developed by any uncased cast-in-place deep foundation element shall not exceed one-sixth of the bearing value of the soil material at minimum depth as set forth in Table 1806.2, up to a maximum of 500 psf (24 kPa), unless a greater value is allowed by the *building official* on the basis of a geotechnical investigation as specified in Section 1803 or a greater value is substantiated by a load test in accordance with Section 1810.3.3.1.2. Frictional resistance and bearing resistance shall not be assumed to act simultaneously unless determined by a geotechnical investigation in accordance with Section 1803.

1810.3.3.1.5 Uplift capacity of a single deep foundation element. Where required by the design, the uplift capacity of a single deep foundation element shall be determined by an *approved* method of analysis based on a minimum factor of safety of three or by load tests conducted in accordance with ASTM D 3689. The maximum allowable uplift load shall not exceed the ultimate load capacity as determined in Section 1810.3.3.1.2, using the results of load tests conducted in accordance with ASTM D 3689, divided by a factor of safety of two.

> **Exception:** Where uplift is due to wind or seismic loading, the minimum factor of safety shall be two where capacity is determined by an analysis and one and one-half where capacity is determined by load tests.

1810.3.3.1.6 Uplift capacity of grouped deep foundation elements. For grouped deep foundation elements subjected to uplift, the allowable working uplift load for the group shall be calculated by a generally accepted method of analysis. Where the deep foundation elements in the group are placed at a center-to-center spacing less than three times the least horizontal dimension of the largest single element, the allowable working uplift load for the group is permitted to be calculated as the lesser of:

1. The proposed individual allowable working uplift load times the number of elements in the group.
2. Two-thirds of the effective weight of the group and the soil contained within a block defined by the perimeter of the group and the length of the element, plus two-thirds of the ultimate shear resistance along the soil block.

1810.3.3.1.7 Load-bearing capacity. Deep foundation elements shall develop ultimate load capacities of at least twice the design working loads in the designated load-bearing layers. Analysis shall show that no soil layer underlying the designated load-bearing layers causes the load-bearing capacity safety factor to be less than two.

1810.3.3.1.8 Bent deep foundation elements. The load-bearing capacity of deep foundation elements discovered to have a sharp or sweeping bend shall be determined by an *approved* method of analysis or by load testing a representative element.

1810.3.3.1.9 Helical piles. The allowable axial design load, P_a, of helical piles shall be determined as follows:

$$P_a = 0.5\,P_u \qquad \textbf{(Equation 18-4)}$$

where P_u is the least value of:

1. Sum of the areas of the helical bearing plates times the ultimate bearing capacity of the soil or rock comprising the bearing stratum.
2. Ultimate capacity determined from well-documented correlations with installation torque.
3. Ultimate capacity determined from load tests.
4. Ultimate axial capacity of pile shaft.
5. Ultimate axial capacity of pile shaft couplings.
6. Sum of the ultimate axial capacity of helical bearing plates affixed to pile.

1810.3.3.2 Allowable lateral load. Where required by the design, the lateral load capacity of a single deep foundation element or a group thereof shall be determined by an *approved* method of analysis or by lateral load tests to at least twice the proposed design working load. The resulting allowable load shall not be more than one-half of the load that produces a gross lateral movement of 1 inch (25 mm) at the lower of the top of foundation element and the ground surface, unless it can be shown that the predicted lateral movement shall cause neither harmful distortion of, nor instability in, the structure, nor cause any element to be loaded beyond its capacity.

1810.3.4 Subsiding soils. Where deep foundation elements are installed through subsiding fills or other subsiding strata and derive support from underlying firmer materials, consideration shall be given to the downward frictional forces that may be imposed on the elements by the subsiding upper strata.

Where the influence of subsiding fills is considered as imposing loads on the element, the allowable stresses specified in this chapter shall be permitted to be increased where satisfactory substantiating data are submitted.

1810.3.5 Dimensions of deep foundation elements. The dimensions of deep foundation elements shall be in accordance with Sections 1810.3.5.1 through 1810.3.5.3, as applicable.

1810.3.5.1 Precast. The minimum lateral dimension of precast concrete deep foundation elements shall be 8 inches (203 mm). Corners of square elements shall be chamfered.

1810.3.5.2 Cast-in-place or grouted-in-place. Cast-in-place and grouted-in-place deep foundation elements shall satisfy the requirements of this section.

1810.3.5.2.1 Cased. Cast-in-place deep foundation elements with a permanent casing shall have a nominal outside diameter of not less than 8 inches (203 mm).

1810.3.5.2.2 Uncased. Cast-in-place deep foundation elements without a permanent casing shall have a diameter of not less than 12 inches (305 mm). The element length shall not exceed 30 times the average diameter.

Exception: The length of the element is permitted to exceed 30 times the diameter, provided the design and installation of the deep foundations are under the direct supervision of a *registered design professional* knowledgeable in the field of soil mechanics and deep foundations. The *registered design professional* shall submit a report to the *building official* stating that the elements were installed in compliance with the *approved construction documents*.

1810.3.5.2.3 Micropiles. Micropiles shall have an outside diameter of 12 inches (305 mm) or less. The minimum diameter set forth elsewhere in Section 1810.3.5 shall not apply to micropiles.

1810.3.5.3 Steel. Steel deep foundation elements shall satisfy the requirements of this section.

1810.3.5.3.1 Structural steel H-piles. Sections of structural steel H-piles shall comply with the requirements for HP shapes in ASTM A 6, or the following:

1. The flange projections shall not exceed 14 times the minimum thickness of metal in either the flange or the web and the flange widths shall not be less than 80 percent of the depth of the section.
2. The nominal depth in the direction of the web shall not be less than 8 inches (203 mm).
3. Flanges and web shall have a minimum nominal thickness of $^3/_8$ inch (9.5 mm).

1810.3.5.3.2 Fully welded steel piles fabricated from plates. Sections of fully welded steel piles fabricated from plates shall comply with the following:

1. The flange projections shall not exceed 14 times the minimum thickness of metal in either the flange or the web and the flange widths shall not be less than 80 percent of the depth of the section.
2. The nominal depth in the direction of the web shall not be less than 8 inches (203 mm).
3. Flanges and web shall have a minimum nominal thickness of $^3/_8$ inch (9.5 mm).

1810.3.5.3.3 Structural steel sheet piling. Individual sections of structural steel sheet piling shall conform to the profile indicated by the manufacturer, and shall conform to the general requirements specified by ASTM A 6.

1810.3.5.3.4 Steel pipes and tubes. Steel pipes and tubes used as deep foundation elements shall have a

nominal outside diameter of not less than 8 inches (203 mm). Where steel pipes or tubes are driven open ended, they shall have a minimum of 0.34 square inch (219 mm^2) of steel in cross section to resist each 1,000 foot-pounds (1356 Nm) of pile hammer energy, or shall have the equivalent strength for steels having a yield strength greater than 35,000 psi (241 MPa) or the wave equation analysis shall be permitted to be used to assess compression stresses induced by driving to evaluate if the pile section is appropriate for the selected hammer. Where a pipe or tube with wall thickness less than 0.179 inch (4.6 mm) is driven open ended, a suitable cutting shoe shall be provided. Concrete-filled steel pipes or tubes in structures assigned to *Seismic Design Category* C, D, E or F shall have a wall thickness of not less than $^3/_{16}$ inch (5 mm). The pipe or tube casing for socketed drilled shafts shall have a nominal outside diameter of not less than 18 inches (457 mm), a wall thickness of not less than $^3/_8$ inch (9.5 mm) and a suitable steel driving shoe welded to the bottom; the diameter of the rock socket shall be approximately equal to the inside diameter of the casing.

Exceptions:

1. There is no minimum diameter for steel pipes or tubes used in micropiles.
2. For mandrel-driven pipes or tubes, the minimum wall thickness shall be $^1/_{10}$ inch (2.5 mm).

1810.3.5.3.5 Helical piles. Dimensions of the central shaft and the number, size and thickness of helical bearing plates shall be sufficient to support the design loads.

1810.3.6 Splices. Splices shall be constructed so as to provide and maintain true alignment and position of the component parts of the deep foundation element during installation and subsequent thereto and shall be designed to resist the axial and shear forces and moments occurring at the location of the splice during driving and for design load combinations. Where deep foundation elements of the same type are being spliced, splices shall develop not less than 50 percent of the bending strength of the weaker section. Where deep foundation elements of different materials or different types are being spliced, splices shall develop the full compressive strength and not less than 50 percent of the tension and bending strength of the weaker section. Where structural steel cores are to be spliced, the ends shall be milled or ground to provide full contact and shall be full-depth welded.

Splices occurring in the upper 10 feet (3048 mm) of the embedded portion of an element shall be designed to resist at allowable stresses the moment and shear that would result from an assumed eccentricity of the axial load of 3 inches (76 mm), or the element shall be braced in accordance with Section 1810.2.2 to other deep foundation elements that do not have splices in the upper 10 feet (3048 mm) of embedment.

1810.3.6.1 Seismic Design Categories C through F. For structures assigned to *Seismic Design Category* C, D, E or F splices of deep foundation elements shall develop the lesser of the following:

1. The nominal strength of the deep foundation element.
2. The axial and shear forces and moments from the seismic load effects including overstrength factor in accordance with Section 12.4.3 or 12.14.3.2 of ASCE 7.

1810.3.7 Top of element detailing at cutoffs. Where a minimum length for reinforcement or the extent of closely spaced confinement reinforcement is specified at the top of a deep foundation element, provisions shall be made so that those specified lengths or extents are maintained after cutoff.

1810.3.8 Precast concrete piles. Precast concrete piles shall be designed and detailed in accordance with Sections 1810.3.8.1 through 1810.3.8.3.

1810.3.8.1 Reinforcement. Longitudinal steel shall be arranged in a symmetrical pattern and be laterally tied with steel ties or wire spiral spaced center to center as follows:

1. At not more than 1 inch (25 mm) for the first five ties or spirals at each end; then
2. At not more than 4 inches (102 mm), for the remainder of the first 2 feet (610 mm) from each end; and then
3. At not more than 6 inches (152 mm) elsewhere.

The size of ties and spirals shall be as follows:

1. For piles having a least horizontal dimension of 16 inches (406 mm) or less, wire shall not be smaller than 0.22 inch (5.6 mm) (No. 5 gage).
2. For piles having a least horizontal dimension of more than 16 inches (406 mm) and less than 20 inches (508 mm), wire shall not be smaller than 0.238 inch (6 mm) (No. 4 gage).
3. For piles having a least horizontal dimension of 20 inches (508 mm) and larger, wire shall not be smaller than $^1/_4$ inch (6.4 mm) round or 0.259 inch (6.6 mm) (No. 3 gage).

1810.3.8.2 Precast nonprestressed piles. Precast nonprestressed concrete piles shall comply with the requirements of Sections 1810.3.8.2.1 through 1810.3.8.2.3.

1810.3.8.2.1 Minimum reinforcement. Longitudinal reinforcement shall consist of at least four bars with a minimum longitudinal reinforcement ratio of 0.008.

1810.3.8.2.2 Seismic reinforcement in Seismic Design Categories C through F. For structures assigned to *Seismic Design Category* C, D, E or F, precast nonprestressed piles shall be reinforced as specified in this section. The minimum longitudinal reinforcement ratio shall be 0.01 throughout the length. Transverse reinforcement shall consist of closed ties or spirals with a minimum $^3/_8$ inch (9.5 mm) diameter. Spacing of transverse reinforcement shall not exceed the smaller of eight times the diameter of the smallest longitudinal bar or 6 inches (152 mm) within a distance of three times the least pile dimension from the bottom of the pile cap. Spacing of transverse reinforcement shall not exceed 6 inches (152 mm) throughout the remainder of the pile.

1810.3.8.2.3 Additional seismic reinforcement in Seismic Design Categories D through F. For structures assigned to *Seismic Design Category* D, E or F, transverse reinforcement shall be in accordance with Section 1810.3.9.4.2.

1810.3.8.3 Precast prestressed piles. Precast prestressed concrete piles shall comply with the requirements of Sections 1810.3.8.3.1 through 1810.3.8.3.3.

1810.3.8.3.1 Effective prestress. The effective prestress in the pile shall not be less than 400 psi (2.76 MPa) for piles up to 30 feet (9144 mm) in length, 550 psi (3.79 MPa) for piles up to 50 feet (15 240 mm) in length and 700 psi (4.83 MPa) for piles greater than 50 feet (15 240 mm) in length.

Effective prestress shall be based on an assumed loss of 30,000 psi (207 MPa) in the prestressing steel. The tensile stress in the prestressing steel shall not exceed the values specified in ACI 318.

1810.3.8.3.2 Seismic reinforcement in Seismic Design Category C. For structures assigned to *Seismic Design Category* C, precast prestressed piles shall have transverse reinforcement in accordance with this section. The volumetric ratio of spiral reinforcement shall not be less than the amount required by the following formula for the upper 20 feet (6096 mm) of the pile.

$$\rho_s = 0.12 f'_c / f_{yh} \qquad \textbf{(Equation 18-5)}$$

where:

f'_c = Specified compressive strength of concrete, psi (MPa).

f_{yh} = Yield strength of spiral reinforcement ≤ 85,000 psi (586 MPa).

ρ_s = Spiral reinforcement index (vol. spiral/vol. core).

At least one-half the volumetric ratio required by Equation 18-5 shall be provided below the upper 20 feet (6096 mm) of the pile.

1810.3.8.3.3 Seismic reinforcement in Seismic Design Categories D through F. For structures assigned to *Seismic Design Category* D, E or F, precast prestressed piles shall have transverse reinforcement in accordance with the following:

1. Requirements in ACI 318, Chapter 18, need not apply, unless specifically referenced.
2. Where the total pile length in the soil is 35 feet (10 668 mm) or less, the lateral transverse reinforcement in the ductile region shall occur through the length of the pile. Where the pile length exceeds 35 feet (10 668 mm), the ductile pile region shall be taken as the greater of 35 feet (10 668 mm) or the distance from the underside of the pile cap to the point of zero curvature plus three times the least pile dimension.
3. In the ductile region, the center-to-center spacing of the spirals or hoop reinforcement shall not exceed one-fifth of the least pile dimension, six times the diameter of the longitudinal strand or 8 inches (203 mm), whichever is smallest.
4. Circular spiral reinforcement shall be spliced by lapping one full turn and bending the end of each spiral to a 90-degree hook or by use of a mechanical or welded splice complying with Section 25.5.7 of ACI 318.
5. Where the transverse reinforcement consists of circular spirals, the volumetric ratio of spiral transverse reinforcement in the ductile region shall comply with the following:

$$\rho_s = 0.25(f'_c / f_{yh})(A_g / A_{ch} - 1.0)[0.5 + 1.4P/(f'_c A_g)] \qquad \textbf{(Equation 18-6)}$$

but not less than

$$\rho_s = 0.12(f'_c / f_{yh})[0.5 + 1.4P/(f'_c A_g)] \geq 0.12 f'_c / f_{yh} \qquad \textbf{(Equation 18-7)}$$

and need not exceed:

$$\rho_s = 0.021 \qquad \textbf{(Equation 18-8)}$$

where:

A_g = Pile cross-sectional area, square inches (mm^2).

A_{ch} = Core area defined by spiral outside diameter, square inches (mm^2).

f'_c = Specified compressive strength of concrete, psi (MPa).

f_{yh} = Yield strength of spiral reinforcement ≤ 85,000 psi (586 MPa).

P = Axial load on pile, pounds (kN), as determined from Equations 16-5 and 16-7.

ρ_s = Volumetric ratio (vol. spiral/vol. core).

This required amount of spiral reinforcement is permitted to be obtained by providing an inner and outer spiral.

6. Where transverse reinforcement consists of rectangular hoops and cross ties, the total cross-sectional area of lateral transverse reinforcement in the ductile region with spacing, s, and perpendicular dimension, h_c, shall conform to:

$$A_{sh} = 0.3s\, h_c\, (f'_c / f_{yh})(A_g / A_{ch} - 1.0)\, [0.5 + 1.4P/(f'_c A_g)] \quad \textbf{(Equation 18-9)}$$

but not less than:

$$A_{sh} = 0.12s\, h_c\, (f'_c / f_{yh})\, [0.5 + 1.4P/(f'_c A_g)] \quad \textbf{(Equation 18-10)}$$

where:

f_{yh} = yield strength of transverse reinforcement ≤ 70,000 psi (483 MPa).

h_c = Cross-sectional dimension of pile core measured center to center of hoop reinforcement, inch (mm).

s = Spacing of transverse reinforcement measured along length of pile, inch (mm).

A_{sh} = Cross-sectional area of tranverse reinforcement, square inches (mm^2).

f'_c = Specified compressive strength of concrete, psi (MPa).

The hoops and cross ties shall be equivalent to deformed bars not less than No. 3 in size. Rectangular hoop ends shall terminate at a corner with seismic hooks.

Outside of the length of the pile requiring transverse confinement reinforcing, the spiral or hoop reinforcing with a volumetric ratio not less than one-half of that required for transverse confinement reinforcing shall be provided.

1810.3.9 Cast-in-place deep foundations. Cast-in-place deep foundation elements shall be designed and detailed in accordance with Sections 1810.3.9.1 through 1810.3.9.6.

1810.3.9.1 Design cracking moment. The design cracking moment (ϕM_n) for a cast-in-place deep foundation element not enclosed by a structural steel pipe or tube shall be determined using the following equation:

$$\phi M_n = 3\sqrt{f'_c}\, S_m \quad \textbf{(Equation 18-11)}$$

For SI: $\phi M_n = 0.25\sqrt{f'_c}\, S_m$

where:

f'_c = Specified compressive strength of concrete or grout, psi (MPa).

S_m = Elastic section modulus, neglecting reinforcement and casing, cubic inches (mm^3).

1810.3.9.2 Required reinforcement. Where subject to uplift or where the required moment strength determined using the load combinations of Section 1605.2 exceeds the design cracking moment determined in accordance with Section 1810.3.9.1, cast-in-place deep foundations not enclosed by a structural steel pipe or tube shall be reinforced.

1810.3.9.3 Placement of reinforcement. Reinforcement where required shall be assembled and tied together and shall be placed in the deep foundation element as a unit before the reinforced portion of the element is filled with concrete.

Exceptions:

1. Steel dowels embedded 5 feet (1524 mm) or less shall be permitted to be placed after concreting, while the concrete is still in a semifluid state.
2. For deep foundation elements installed with a hollow-stem auger, tied reinforcement shall be placed after elements are concreted, while the concrete is still in a semifluid state. Longitudinal reinforcement without lateral ties shall be placed either through the hollow stem of the auger prior to concreting or after concreting, while the concrete is still in a semifluid state.
3. For Group R-3 and U occupancies not exceeding two stories of light-frame construction, reinforcement is permitted to be placed after concreting, while the concrete is still in a semifluid state, and the concrete cover requirement is permitted to be reduced to 2 inches (51 mm), provided the construction method can be demonstrated to the satisfaction of the *building official.*

1810.3.9.4 Seismic reinforcement. Where a structure is assigned to *Seismic Design Category* C, reinforcement shall be provided in accordance with Section 1810.3.9.4.1. Where a structure is assigned to *Seismic Design Category* D, E or F, reinforcement shall be provided in accordance with Section 1810.3.9.4.2.

Exceptions:

1. Isolated deep foundation elements supporting posts of Group R-3 and U occupancies not exceeding two stories of light-frame construction shall be permitted to be reinforced as required by rational analysis but with not less than one No. 4 bar, without ties or spirals, where detailed so the element is not subject to lateral loads and the soil provides adequate lateral support in accordance with Section 1810.2.1.

2. Isolated deep foundation elements supporting posts and bracing from decks and patios appurtenant to Group R-3 and U occupancies not exceeding two stories of light-frame construction shall be permitted to be reinforced as required by rational analysis but with not less than one No. 4 bar, without ties or spirals, where the lateral load, *E*, to the top of the element does not exceed 200 pounds (890 N) and the soil provides adequate lateral support in accordance with Section 1810.2.1.
3. Deep foundation elements supporting the concrete foundation wall of Group R-3 and U occupancies not exceeding two stories of light-frame construction shall be permitted to be reinforced as required by rational analysis but with not less than two No. 4 bars, without ties or spirals, where the design cracking moment determined in accordance with Section 1810.3.9.1 exceeds the required moment strength determined using the load combinations with overstrength factor in Section 12.4.3.2 or 12.14.3.2 of ASCE 7 and the soil provides adequate lateral support in accordance with Section 1810.2.1.
4. Closed ties or spirals where required by Section 1810.3.9.4.2 shall be permitted to be limited to the top 3 feet (914 mm) of deep foundation elements 10 feet (3048 mm) or less in depth supporting Group R-3 and U occupancies of *Seismic Design Category* D, not exceeding two stories of light-frame construction.

1810.3.9.4.1 Seismic reinforcement in Seismic Design Category C. For structures assigned to *Seismic Design Category* C, cast-in-place deep foundation elements shall be reinforced as specified in this section. Reinforcement shall be provided where required by analysis.

A minimum of four longitudinal bars, with a minimum longitudinal reinforcement ratio of 0.0025, shall be provided throughout the minimum reinforced length of the element as defined below starting at the top of the element. The minimum reinforced length of the element shall be taken as the greatest of the following:

1. One-third of the element length.
2. A distance of 10 feet (3048 mm).
3. Three times the least element dimension.
4. The distance from the top of the element to the point where the design cracking moment determined in accordance with Section 1810.3.9.1 exceeds the required moment strength determined using the load combinations of Section 1605.2.

Transverse reinforcement shall consist of closed ties or spirals with a minimum $^3/_8$ inch (9.5 mm) diameter. Spacing of transverse reinforcement shall not exceed the smaller of 6 inches (152 mm) or 8-longitudinal-bar diameters, within a distance of three times the least element dimension from the bottom of the pile cap. Spacing of transverse reinforcement shall not exceed 16 longitudinal bar diameters throughout the remainder of the reinforced length.

Exceptions:

1. The requirements of this section shall not apply to concrete cast in structural steel pipes or tubes.
2. A spiral-welded metal casing of a thickness not less than the manufacturer's standard No. 14 gage (0.068 inch) is permitted to provide concrete confinement in lieu of the closed ties or spirals. Where used as such, the metal casing shall be protected against possible deleterious action due to soil constituents, changing water levels or other factors indicated by boring records of site conditions.

1810.3.9.4.2 Seismic reinforcement in Seismic Design Categories D through F. For structures assigned to *Seismic Design Category* D, E or F, cast-in-place deep foundation elements shall be reinforced as specified in this section. Reinforcement shall be provided where required by analysis.

A minimum of four longitudinal bars, with a minimum longitudinal reinforcement ratio of 0.005, shall be provided throughout the minimum reinforced length of the element as defined below starting at the top of the element. The minimum reinforced length of the element shall be taken as the greatest of the following:

1. One-half of the element length.
2. A distance of 10 feet (3048 mm).
3. Three times the least element dimension.
4. The distance from the top of the element to the point where the design cracking moment determined in accordance with Section 1810.3.9.1 exceeds the required moment strength determined using the load combinations of Section 1605.2.

Transverse reinforcement shall consist of closed ties or spirals no smaller than No. 3 bars for elements with a least dimension up to 20 inches (508 mm), and No. 4 bars for larger elements. Throughout the remainder of the reinforced length outside the regions with transverse confinement reinforcement, as specified in Section 1810.3.9.4.2.1 or

1810.3.9.4.2.2, the spacing of transverse reinforcement shall not exceed the least of the following:

1. 12 longitudinal bar diameters;
2. One-half the least dimension of the element; and
3. 12 inches (305 mm).

Exceptions:

1. The requirements of this section shall not apply to concrete cast in structural steel pipes or tubes.
2. A spiral-welded metal casing of a thickness not less than manufacturer's standard No. 14 gage (0.068 inch) is permitted to provide concrete confinement in lieu of the closed ties or spirals. Where used as such, the metal casing shall be protected against possible deleterious action due to soil constituents, changing water levels or other factors indicated by boring records of site conditions.

1810.3.9.4.2.1 Site Classes A through D. For *Site Class* A, B, C or D sites, transverse confinement reinforcement shall be provided in the element in accordance with Sections 18.7.5.2, 18.7.5.3 and 18.7.5.4 of ACI 318 within three times the least element dimension of the bottom of the pile cap. A transverse spiral reinforcement ratio of not less than one-half of that required in Section 18.7.5.4(a) of ACI 318 shall be permitted.

1810.3.9.4.2.2 Site Classes E and F. For *Site Class* E or F sites, transverse confinement reinforcement shall be provided in the element in accordance with Sections 18.7.5.2, 18.7.5.3 and 18.7.5.4 of ACI 318 within seven times the least element dimension of the pile cap and within seven times the least element dimension of the interfaces of strata that are hard or stiff and strata that are liquefiable or are composed of soft- to medium-stiff clay.

1810.3.9.5 Belled drilled shafts. Where drilled shafts are belled at the bottom, the edge thickness of the bell shall not be less than that required for the edge of footings. Where the sides of the bell slope at an angle less than 60 degrees (1 rad) from the horizontal, the effects of vertical shear shall be considered.

1810.3.9.6 Socketed drilled shafts. Socketed drilled shafts shall have a permanent pipe or tube casing that extends down to bedrock and an uncased socket drilled into the bedrock, both filled with concrete. Socketed drilled shafts shall have reinforcement or a structural steel core for the length as indicated by an *approved* method of analysis.

The depth of the rock socket shall be sufficient to develop the full load-bearing capacity of the element with a minimum safety factor of two, but the depth shall not be less than the outside diameter of the pipe or tube casing. The design of the rock socket is permitted to be predicated on the sum of the allowable load-bearing pressure on the bottom of the socket plus bond along the sides of the socket.

Where a structural steel core is used, the gross cross-sectional area of the core shall not exceed 25 percent of the gross area of the drilled shaft.

1810.3.10 Micropiles. Micropiles shall be designed and detailed in accordance with Sections 1810.3.10.1 through 1810.3.10.4.

1810.3.10.1 Construction. Micropiles shall develop their load-carrying capacity by means of a bond zone in soil, bedrock or a combination of soil and bedrock. Micropiles shall be grouted and have either a steel pipe or tube or steel reinforcement at every section along the length. It shall be permitted to transition from deformed reinforcing bars to steel pipe or tube reinforcement by extending the bars into the pipe or tube section by at least their development length in tension in accordance with ACI 318.

1810.3.10.2 Materials. Reinforcement shall consist of deformed reinforcing bars in accordance with ASTM A 615 Grade 60 or 75 or ASTM A 722 Grade 150.

The steel pipe or tube shall have a minimum wall thickness of $^{3}/_{16}$ inch (4.8 mm). Splices shall comply with Section 1810.3.6. The steel pipe or tube shall have a minimum yield strength of 45,000 psi (310 MPa) and a minimum elongation of 15 percent as shown by mill certifications or two coupon test samples per 40,000 pounds (18 160 kg) of pipe or tube.

1810.3.10.3 Reinforcement. For micropiles or portions thereof grouted inside a temporary or permanent casing or inside a hole drilled into bedrock or a hole drilled with grout, the steel pipe or tube or steel reinforcement shall be designed to carry at least 40 percent of the design compression load. Micropiles or portions thereof grouted in an open hole in soil without temporary or permanent casing and without suitable means of verifying the hole diameter during grouting shall be designed to carry the entire compression load in the reinforcing steel. Where a steel pipe or tube is used for reinforcement, the portion of the grout enclosed within the pipe is permitted to be included in the determination of the allowable stress in the grout.

1810.3.10.4 Seismic reinforcement. For structures assigned to *Seismic Design Category* C, a permanent steel casing shall be provided from the top of the micropile down to the point of zero curvature. For structures assigned to *Seismic Design Category* D, E or F, the micropile shall be considered as an alternative system in accordance with Section 104.11. The alternative system design, supporting documentation and test data shall be submitted to the *building official* for review and approval.

1810.3.11 Pile caps. Pile caps shall be of reinforced concrete, and shall include all elements to which vertical deep

foundation elements are connected, including grade beams and mats. The soil immediately below the pile cap shall not be considered as carrying any vertical load. The tops of vertical deep foundation elements shall be embedded not less than 3 inches (76 mm) into pile caps and the caps shall extend at least 4 inches (102 mm) beyond the edges of the elements. The tops of elements shall be cut or chipped back to sound material before capping.

1810.3.11.1 Seismic Design Categories C through F. For structures assigned to *Seismic Design Category* C, D, E or F, concrete deep foundation elements shall be connected to the pile cap by embedding the element reinforcement or field-placed dowels anchored in the element into the pile cap for a distance equal to their development length in accordance with ACI 318. It shall be permitted to connect precast prestressed piles to the pile cap by developing the element prestressing strands into the pile cap provided the connection is ductile. For deformed bars, the development length is the full development length for compression, or tension in the case of uplift, without reduction for excess reinforcement in accordance with Section 25.4.10 of ACI 318. Alternative measures for laterally confining concrete and maintaining toughness and ductile-like behavior at the top of the element shall be permitted provided the design is such that any hinging occurs in the confined region.

The minimum transverse steel ratio for confinement shall not be less than one-half of that required for columns.

For resistance to uplift forces, anchorage of steel pipes, tubes or H-piles to the pile cap shall be made by means other than concrete bond to the bare steel section. Concrete-filled steel pipes or tubes shall have reinforcement of not less than 0.01 times the cross-sectional area of the concrete fill developed into the cap and extending into the fill a length equal to two times the required cap embedment, but not less than the development length in tension of the reinforcement.

1810.3.11.2 Seismic Design Categories D through F. For structures assigned to *Seismic Design Category* D, E or F, deep foundation element resistance to uplift forces or rotational restraint shall be provided by anchorage into the pile cap, designed considering the combined effect of axial forces due to uplift and bending moments due to fixity to the pile cap. Anchorage shall develop a minimum of 25 percent of the strength of the element in tension. Anchorage into the pile cap shall comply with the following:

1. In the case of uplift, the anchorage shall be capable of developing the least of the following:

   1.1. The nominal tensile strength of the longitudinal reinforcement in a concrete element.

   1.2. The nominal tensile strength of a steel element.

   1.3. The frictional force developed between the element and the soil multiplied by 1.3.

   Exception: The anchorage is permitted to be designed to resist the axial tension force resulting from the seismic load effects including overstrength factor in accordance with Section 12.4.3 or 12.14.3.2 of ASCE 7.

2. In the case of rotational restraint, the anchorage shall be designed to resist the axial and shear forces, and moments resulting from the seismic load effects including overstrength factor in accordance with Section 12.4.3 or 12.14.3.2 of ASCE 7 or the anchorage shall be capable of developing the full axial, bending and shear nominal strength of the element.

Where the vertical lateral force-resisting elements are columns, the pile cap flexural strengths shall exceed the column flexural strength. The connection between batter piles and pile caps shall be designed to resist the nominal strength of the pile acting as a short column. Batter piles and their connection shall be designed to resist forces and moments that result from the application of seismic load effects including overstrength factor in accordance with Section 12.4.3 or 12.14.3.2 of ASCE 7.

1810.3.12 Grade beams. For structures assigned to *Seismic Design Category* D, E or F, grade beams shall comply with the provisions in Section 18.13.3 of ACI 318 for grade beams, except where they are designed to resist the seismic load effects including overstrength factor in accordance with Section 12.4.3 or 12.14.3.2 of ASCE 7.

1810.3.13 Seismic ties. For structures assigned to *Seismic Design Category* C, D, E or F, individual deep foundations shall be interconnected by ties. Unless it can be demonstrated that equivalent restraint is provided by reinforced concrete beams within slabs on grade or reinforced concrete slabs on grade or confinement by competent rock, hard cohesive soils or very dense granular soils, ties shall be capable of carrying, in tension or compression, a force equal to the lesser of the product of the larger pile cap or column design gravity load times the seismic coefficient, S_{DS}, divided by 10, and 25 percent of the smaller pile or column design gravity load.

Exception: In Group R-3 and U occupancies of light-frame construction, deep foundation elements supporting foundation walls, isolated interior posts detailed so the element is not subject to lateral loads or exterior decks and patios are not subject to interconnection where the soils are of adequate stiffness, subject to the approval of the *building official.*

1810.4 Installation. Deep foundations shall be installed in accordance with Section 1810.4. Where a single deep foundation element comprises two or more sections of different materials or different types spliced together, each section shall satisfy the applicable conditions of installation.

1810.4.1 Structural integrity. Deep foundation elements shall be installed in such a manner and sequence as to prevent distortion or damage that may adversely affect the structural integrity of adjacent structures or of foundation elements being installed or already in place and as to avoid compacting the surrounding soil to the extent that other foundation elements cannot be installed properly.

1810.4.1.1 Compressive strength of precast concrete piles. A precast concrete pile shall not be driven before the concrete has attained a compressive strength of at least 75 percent of the specified compressive strength (f'_c), but not less than the strength sufficient to withstand handling and driving forces.

1810.4.1.2 Casing. Where cast-in-place deep foundation elements are formed through unstable soils and concrete is placed in an open-drilled hole, a casing shall be inserted in the hole prior to placing the concrete. Where the casing is withdrawn during concreting, the level of concrete shall be maintained above the bottom of the casing at a sufficient height to offset any hydrostatic or lateral soil pressure. Driven casings shall be mandrel driven their full length in contact with the surrounding soil.

1810.4.1.3 Driving near uncased concrete. Deep foundation elements shall not be driven within six element diameters center to center in granular soils or within one-half the element length in cohesive soils of an uncased element filled with concrete less than 48 hours old unless *approved* by the *building official*. If the concrete surface in any completed element rises or drops, the element shall be replaced. Driven uncased deep foundation elements shall not be installed in soils that could cause heave.

1810.4.1.4 Driving near cased concrete. Deep foundation elements shall not be driven within four and one-half average diameters of a cased element filled with concrete less than 24 hours old unless *approved* by the *building official*. Concrete shall not be placed in casings within heave range of driving.

1810.4.1.5 Defective timber piles. Any substantial sudden increase in rate of penetration of a timber pile shall be investigated for possible damage. If the sudden increase in rate of penetration cannot be correlated to soil strata, the pile shall be removed for inspection or rejected.

1810.4.2 Identification. Deep foundation materials shall be identified for conformity to the specified grade with this identity maintained continuously from the point of manufacture to the point of installation or shall be tested by an *approved agency* to determine conformity to the specified grade. The *approved agency* shall furnish an affidavit of compliance to the *building official*.

1810.4.3 Location plan. A plan showing the location and designation of deep foundation elements by an identification system shall be filed with the *building official* prior to installation of such elements. Detailed records for elements shall bear an identification corresponding to that shown on the plan.

1810.4.4 Preexcavation. The use of jetting, augering or other methods of preexcavation shall be subject to the approval of the *building official*. Where permitted, preexcavation shall be carried out in the same manner as used for deep foundation elements subject to load tests and in such a manner that will not impair the carrying capacity of the elements already in place or damage adjacent structures. Element tips shall be driven below the preexcavated depth until the required resistance or penetration is obtained.

1810.4.5 Vibratory driving. Vibratory drivers shall only be used to install deep foundation elements where the element load capacity is verified by load tests in accordance with Section 1810.3.3.1.2. The installation of production elements shall be controlled according to power consumption, rate of penetration or other *approved* means that ensure element capacities equal or exceed those of the test elements.

1810.4.6 Heaved elements. Deep foundation elements that have heaved during the driving of adjacent elements shall be redriven as necessary to develop the required capacity and penetration, or the capacity of the element shall be verified by load tests in accordance with Section 1810.3.3.1.2.

1810.4.7 Enlarged base cast-in-place elements. Enlarged bases for cast-in-place deep foundation elements formed by compacting concrete or by driving a precast base shall be formed in or driven into granular soils. Such elements shall be constructed in the same manner as successful prototype test elements driven for the project. Shafts extending through peat or other organic soil shall be encased in a permanent steel casing. Where a cased shaft is used, the shaft shall be adequately reinforced to resist column action or the annular space around the shaft shall be filled sufficiently to reestablish lateral support by the soil. Where heave occurs, the element shall be replaced unless it is demonstrated that the element is undamaged and capable of carrying twice its design load.

1810.4.8 Hollow-stem augered, cast-in-place elements. Where concrete or grout is placed by pumping through a hollow-stem auger, the auger shall be permitted to rotate in a clockwise direction during withdrawal. As the auger is withdrawn at a steady rate or in increments not to exceed 1 foot (305 mm), concreting or grouting pumping pressures shall be measured and maintained high enough at all times to offset hydrostatic and lateral earth pressures. Concrete or grout volumes shall be measured to ensure that the volume of concrete or grout placed in each element is equal to or greater than the theoretical volume of the hole created by the auger. Where the installation process of any element is interrupted or a loss of concreting or grouting pressure occurs, the element shall be redrilled to 5 feet (1524 mm) below the elevation of the tip of the auger when the installation was interrupted or concrete or grout pressure was lost and reformed. Augered cast-in-place elements shall not be installed within six diameters center to center of an element filled with concrete or grout less than 12 hours old, unless *approved* by the *building official*. If the concrete or grout level in any completed element drops

due to installation of an adjacent element, the element shall be replaced.

1810.4.9 Socketed drilled shafts. The rock socket and pipe or tube casing of socketed drilled shafts shall be thoroughly cleaned of foreign materials before filling with concrete. Steel cores shall be bedded in cement grout at the base of the rock socket.

1810.4.10 Micropiles. Micropile deep foundation elements shall be permitted to be formed in holes advanced by rotary or percussive drilling methods, with or without casing. The elements shall be grouted with a fluid cement grout. The grout shall be pumped through a tremie pipe extending to the bottom of the element until grout of suitable quality returns at the top of the element. The following requirements apply to specific installation methods:

1. For micropiles grouted inside a temporary casing, the reinforcing bars shall be inserted prior to withdrawal of the casing.The casing shall be withdrawn in a controlled manner with the grout level maintained at the top of the element to ensure that the grout completely fills the drill hole. During withdrawal of the casing, the grout level inside the casing shall be monitored to verify that the flow of grout inside the casing is not obstructed.
2. For a micropile or portion thereof grouted in an open drill hole in soil without temporary casing, the minimum design diameter of the drill hole shall be verified by a suitable device during grouting.
3. For micropiles designed for end bearing, a suitable means shall be employed to verify that the bearing surface is properly cleaned prior to grouting.
4. Subsequent micropiles shall not be drilled near elements that have been grouted until the grout has had sufficient time to harden.
5. Micropiles shall be grouted as soon as possible after drilling is completed.
6. For micropiles designed with a full-length casing, the casing shall be pulled back to the top of the bond zone and reinserted or some other suitable means employed to assure grout coverage outside the casing.

1810.4.11 Helical piles. Helical piles shall be installed to specified embedment depth and torsional resistance criteria as determined by a *registered design professional.* The torque applied during installation shall not exceed the maximum allowable installation torque of the helical pile.

1810.4.12 Special inspection. *Special inspections* in accordance with Sections 1705.7 and 1705.8 shall be provided for driven and cast-in-place deep foundation elements, respectively. *Special inspections* in accordance with Section 1705.9 shall be provided for helical piles.

CHAPTER 19

CONCRETE

Italics are used for text within Sections 1903 through 1905 of this code to indicate provisions that differ from ACI 318.

User note: Code change proposals to this chapter will be considered by the IBC – Structural Code Development Committee during the 2016 (Group B) Code Development Cycle. See explanation on page iv.

SECTION 1901
GENERAL

1901.1 Scope. The provisions of this chapter shall govern the materials, quality control, design and construction of concrete used in structures.

1901.2 Plain and reinforced concrete. Structural concrete shall be designed and constructed in accordance with the requirements of this chapter and ACI 318 as amended in Section 1905 of this code. Except for the provisions of Sections 1904 and 1907, the design and construction of slabs on grade shall not be governed by this chapter unless they transmit vertical loads or lateral forces from other parts of the structure to the soil.

1901.3 Anchoring to concrete. Anchoring to concrete shall be in accordance with ACI 318 as amended in Section 1905, and applies to cast-in (headed bolts, headed studs and hooked J- or L-bolts), post-installed expansion (torque-controlled and displacement-controlled), undercut and adhesive anchors.

1901.4 Composite structural steel and concrete structures. Systems of structural steel acting compositely with reinforced concrete shall be designed in accordance with Section 2206 of this code.

1901.5 Construction documents. The *construction documents* for structural concrete construction shall include:

1. The specified compressive strength of concrete at the stated ages or stages of construction for which each concrete element is designed.
2. The specified strength or grade of reinforcement.
3. The size and location of structural elements, reinforcement and anchors.
4. Provision for dimensional changes resulting from creep, shrinkage and temperature.
5. The magnitude and location of prestressing forces.
6. Anchorage length of reinforcement and location and length of lap splices.
7. Type and location of mechanical and welded splices of reinforcement.
8. Details and location of contraction or isolation joints specified for plain concrete.
9. Minimum concrete compressive strength at time of posttensioning.
10. Stressing sequence for posttensioning tendons.
11. For structures assigned to *Seismic Design Category* D, E or F, a statement if slab on grade is designed as a structural diaphragm.

1901.6 Special inspections and tests. *Special inspections* and tests of concrete elements of buildings and structures and concreting operations shall be as required by Chapter 17.

SECTION 1902
DEFINITIONS

1902.1 General. The words and terms defined in ACI 318 shall, for the purposes of this chapter and as used elsewhere in this code for concrete construction, have the meanings shown in ACI 318 as modified by Section 1905.1.1.

SECTION 1903
SPECIFICATIONS FOR TESTS AND MATERIALS

1903.1 General. Materials used to produce concrete, concrete itself and testing thereof shall comply with the applicable standards listed in ACI 318.

Exception: *The following standards as referenced in Chapter 35 shall be permitted to be used.*

1. *ASTM C 150*
2. *ASTM C 595*
3. *ASTM C 1157*

1903.2 Special inspections. *Where required, special inspections and tests shall be in accordance with Chapter 17.*

1903.3 Glass fiber-reinforced concrete. *Glass fiber-reinforced concrete (GFRC) and the materials used in such concrete shall be in accordance with the PCI MNL 128 standard.*

1903.4 Flat wall insulating concrete form (ICF) systems. *Insulating concrete form material used for forming flat concrete walls shall conform to ASTM E 2634.*

SECTION 1904
DURABILITY REQUIREMENTS

1904.1 Structural concrete. Structural concrete shall conform to the durability requirements of ACI 318.

Exception: *For Group R-2 and R-3 occupancies not more than three stories above grade plane, the specified compressive strength, f'_c for concrete in basement walls, foun-*

dation walls, exterior walls and other vertical surfaces exposed to the weather shall be not less than 3,000 psi (20.7 MPa).

1904.2 Nonstructural concrete. *The registered design professional shall assign nonstructural concrete a freeze-thaw exposure class, as defined in ACI 318, based on the anticipated exposure of nonstructural concrete. Nonstructural concrete shall have a minimum specified compressive strength, f'_c, of 2,500 psi (17.2 MPa) for Class F0; 3,000 psi (20.7 MPa) for Class F1; and 3,500 psi (24.1 MPa) for Classes F2 and F3. Nonstructural concrete shall be air entrained in accordance with ACI 318.*

SECTION 1905
MODIFICATIONS TO ACI 318

1905.1 General. The text of ACI 318 shall be modified as indicated in Sections 1905.1.1 through 1905.1.8.

1905.1.1 ACI 318, Section 2.3. Modify existing definitions and add the following definitions to ACI 318, Section 2.3.

DESIGN DISPLACEMENT. Total lateral displacement expected for the design-basis earthquake, *as specified by Section 12.8.6 of ASCE 7.*

DETAILED PLAIN CONCRETE STRUCTURAL WALL. A wall complying with the requirements of Chapter 14, including 14.6.2.

ORDINARY PRECAST STRUCTURAL WALL. A precast wall complying with the requirements of Chapters 1 through 13, 15, 16 and 19 through 26.

ORDINARY REINFORCED CONCRETE STRUCTURAL WALL. A *cast-in-place* wall complying with the requirements of Chapters 1 through 13, 15, 16 and 19 through 26.

ORDINARY STRUCTURAL PLAIN CONCRETE WALL. A wall complying with the requirements of Chapter 14, *excluding 14.6.2.*

SPECIAL STRUCTURAL WALL. A cast-in-place or precast wall complying with the requirements of 18.2.4 through 18.2.8, 18.10 and 18.11, as applicable, in addition to the requirements for ordinary reinforced concrete structural walls *or ordinary precast structural walls, as applicable. Where ASCE 7 refers to a "special reinforced concrete structural wall," it shall be deemed to mean a "special structural wall."*

1905.1.2 ACI 318, Section 18.2.1. Modify ACI 318 Sections 18.2.1.2 and 18.2.1.6 to read as follows:

18.2.1.2 – Structures assigned to Seismic Design Category A shall satisfy requirements of Chapters 1 through 17 and 19 through 26*; Chapter 18 does not apply.* Structures assigned to *Seismic Design Category* B, C, D, E or F also shall satisfy 18.2.1.3 through 18.2.1.7, as applicable. *Except for structural elements of plain concrete complying with Section 1905.1.7 of the International Building Code, structural elements of plain concrete are prohibited in structures assigned to Seismic Design Category C, D, E or F.*

18.2.1.6 – Structural systems designated as part of the seismic force-resisting system shall be restricted to those *permitted by ASCE 7.* Except for *Seismic Design Category* A, for which Chapter 18 does not apply, the following provisions shall be satisfied for each structural system designated as part of the seismic force-resisting system, regardless of the *seismic design category*:

(a) Ordinary moment frames shall satisfy 18.3.

(b) Ordinary reinforced concrete structural walls *and ordinary precast structural walls* need not satisfy any provisions in Chapter 18.

(c) Intermediate moment frames shall satisfy 18.4.

(d) Intermediate precast *structural* walls shall satisfy 18.5.

(e) Special moment frames shall satisfy 18.6 through 18.9.

(f) Special structural walls shall satisfy 18.10.

(g) Special structural walls constructed using precast concrete shall satisfy 18.11.

All special moment frames and special structural walls shall also satisfy 18.2.4 through 18.2.8.

1905.1.3 ACI 318, Section 18.5. Modify ACI 318, Section 18.5, by adding new Section 18.5.2.2 and renumbering existing Sections 18.5.2.2 and 18.5.2.3 to become 18.5.2.3 and 18.5.2.4, respectively.

18.5.2.2 – Connections that are designed to yield shall be capable of maintaining 80 percent of their design strength at the deformation induced by the design displacement or shall use Type 2 mechanical splices.

18.5.2.3 – Elements of the connection that are not designed to yield shall develop at least 1.5 S_y.

18.5.2.4 – In structures assigned to SDC D, E or F, wall piers shall be designed in accordance with 18.10.8 or 18.14 in ACI 318.

1905.1.4 ACI 318, Section 18.11. Modify ACI 318, Section 18.11.2.1, to read as follows:

18.11.2.1 – Special structural walls constructed using precast concrete shall satisfy all the requirements of 18.10 *for cast-in-place special structural walls* in addition to 18.5.2.

1905.1.5 ACI 318, Section 18.13.1.1. Modify ACI 318, Section 18.13.1.1, to read as follows:

18.13.1.1 – Foundations resisting earthquake-induced forces or transferring earthquake-induced forces between a structure and ground shall comply with the requirements of 18.13 and other applicable provisions of ACI 318 *unless modified by Chapter 18 of the International Building Code.*

1905.1.6 ACI 318, Section 14.6. Modify ACI 318, Section 14.6, by adding new Section 14.6.2 to read as follows:

14.6.2 – Detailed plain concrete structural walls.

14.6.2.1 – Detailed plain concrete structural walls are walls conforming to the requirements of ordinary structural plain concrete walls and 14.6.2.2.

14.6.2.2 – Reinforcement shall be provided as follows:

(a) Vertical reinforcement of at least 0.20 square inch (129 mm²) in cross-sectional area shall be provided continuously from support to support at each corner, at each side of each opening and at the ends of walls. The continuous vertical bar required beside an opening is permitted to substitute for one of the two No. 5 bars required by 14.6.1.

(b) Horizontal reinforcement at least 0.20 square inch (129 mm²) in cross-sectional area shall be provided:

1. Continuously at structurally connected roof and floor levels and at the top of walls;

2. At the bottom of load-bearing walls or in the top of foundations where doweled to the wall; and

3. At a maximum spacing of 120 inches (3048 mm).

Reinforcement at the top and bottom of openings, where used in determining the maximum spacing specified in Item 3 above, shall be continuous in the wall.

1905.1.7 ACI 318, Section 14.1.4. Delete ACI 318, Section 14.1.4, and replace with the following:

14.1.4 – Plain concrete in structures assigned to Seismic Design Category C, D, E or F.

14.1.4.1 – Structures assigned to Seismic Design Category C, D, E or F shall not have elements of structural plain concrete, except as follows:

(a) Structural plain concrete basement, foundation or other walls below the base as defined in ASCE 7 are permitted in detached one- and two-family dwellings three stories or less in height constructed with stud-bearing walls. In dwellings assigned to Seismic Design Category D or E, the height of the wall shall not exceed 8 feet (2438 mm), the thickness shall be not less than $7^1/_2$ inches (190 mm), and the wall shall retain no more than 4 feet (1219 mm) of unbalanced fill. Walls shall have reinforcement in accordance with 14.6.1.

(b) Isolated footings of plain concrete supporting pedestals or columns are permitted, provided the projection of the footing beyond the face of the supported member does not exceed the footing thickness.

***Exception:** In detached one- and two-family dwellings three stories or less in height, the projection of the footing beyond the face of the supported member is permitted to exceed the footing thickness.*

(c) Plain concrete footings supporting walls are permitted, provided the footings have at least two continuous longitudinal reinforcing bars. Bars shall not be smaller than No. 4 and shall have a total area of not less than 0.002 times the gross cross-sectional area of the footing. For footings that exceed 8 inches (203 mm) in thickness, a minimum of one bar shall be provided at the top and bottom of the footing. Continuity of reinforcement shall be provided at corners and intersections.

Exceptions:

1. In Seismic Design Categories A, B and C, detached one- and two-family dwellings three stories or less in height constructed with stud-bearing walls are permitted to have plain concrete footings without longitudinal reinforcement.

2. For foundation systems consisting of a plain concrete footing and a plain concrete stemwall, a minimum of one bar shall be provided at the top of the stemwall and at the bottom of the footing.

3. Where a slab on ground is cast monolithically with the footing, one No. 5 bar is permitted to be located at either the top of the slab or bottom of the footing.

1905.1.8 ACI 318, Section 17.2.3. Modify ACI 318 Sections 17.2.3.4.2, 17.2.3.4.3(d) and 17.2.3.5.2 to read as follows:

17.2.3.4.2 – Where the tensile component of the strength-level earthquake force applied to anchors exceeds 20 percent of the total factored anchor tensile force associated with the same load combination, anchors and their attachments shall be designed in accordance with 17.2.3.4.3. The anchor design tensile strength shall be determined in accordance with 17.2.3.4.4.

***Exception:** Anchors designed to resist wall out-of-plane forces with design strengths equal to or greater than the force determined in accordance with ASCE 7 Equation 12.11-1 or 12.14-10 shall be deemed to satisfy Section 17.2.3.4.3(d).*

17.2.3.4.3(d) – The anchor or group of anchors shall be designed for the maximum tension obtained from design load combinations that include E, with E increased by Ω_0. The anchor design tensile strength shall *be calculated from 17.2.3.4.4.*

17.2.3.5.2 – Where the shear component of the strength-level earthquake force applied to anchors exceeds 20 percent of the total factored anchor shear force associated with the same load combination, anchors and their attachments shall be designed in accordance with 17.2.3.5.3. The anchor design shear strength for resisting earthquake forces shall be determined in accordance with 17.5.

Exceptions:

1. *For the calculation of the in-plane shear strength of anchor bolts attaching wood sill plates of bearing or nonbearing walls of light-frame wood structures to foundations or foundation stem walls, the in-plane shear strength in accordance with 17.5.2 and 17.5.3 need not be computed and 17.2.3.5.3 shall be deemed to be satisfied provided all of the following are met:*
   - *1.1. The allowable in-plane shear strength of the anchor is determined in accordance with AWC NDS Table 11E for lateral design values parallel to grain.*
   - *1.2. The maximum anchor nominal diameter is $^5/_8$ inch (16 mm).*
   - *1.3. Anchor bolts are embedded into concrete a minimum of 7 inches (178 mm).*
   - *1.4. Anchor bolts are located a minimum of $1^3/_4$ inches (45 mm) from the edge of the concrete parallel to the length of the wood sill plate.*
   - *1.5. Anchor bolts are located a minimum of 15 anchor diameters from the edge of the concrete perpendicular to the length of the wood sill plate.*
   - *1.6. The sill plate is 2-inch (51 mm) or 3-inch (76 mm) nominal thickness.*
2. *For the calculation of the in-plane shear strength of anchor bolts attaching cold-formed steel track of bearing or nonbearing walls of light-frame construction to foundations or foundation stem walls, the in-plane shear strength in accordance with 17.5.2 and 17.5.3 need not be computed and 17.2.3.5.3 shall be deemed to be satisfied provided all of the following are met:*
   - *2.1. The maximum anchor nominal diameter is $^5/_8$ inch (16 mm).*
   - *2.2. Anchors are embedded into concrete a minimum of 7 inches (178 mm).*
   - *2.3. Anchors are located a minimum of $1^3/_4$ inches (45 mm) from the edge of the concrete parallel to the length of the track.*
   - *2.4. Anchors are located a minimum of 15 anchor diameters from the edge of the concrete perpendicular to the length of the track.*
   - *2.5. The track is 33 to 68 mil (0.84 mm to 1.73 mm) designation thickness.*

   Allowable in-plane shear strength of exempt anchors, parallel to the edge of concrete, shall be permitted to be determined in accordance with AISI S100 Section E3.3.1.
3. *In light-frame construction bearing or nonbearing walls, shear strength of concrete anchors less than or equal to 1 inch [25 mm] in diameter attaching sill plate or track to foundation or foundation stem wall need not satisfy 17.2.3.5.3(a) through (c) when the design strength of the anchors is determined in accordance with 17.5.2.1(c).*

SECTION 1906
STRUCTURAL PLAIN CONCRETE

1906.1 Scope. The design and construction of structural plain concrete, both cast-in-place and precast, shall comply with the minimum requirements of ACI 318, as modified in Section 1905.

Exception: For Group R-3 occupancies and buildings of other occupancies less than two stories above grade plane of light-frame construction, the required footing thickness of ACI 318 is permitted to be reduced to 6 inches (152 mm), provided that the footing does not extend more than 4 inches (102 mm) on either side of the supported wall.

SECTION 1907
MINIMUM SLAB PROVISIONS

1907.1 General. The thickness of concrete floor slabs supported directly on the ground shall not be less than $3^1/_2$ inches (89 mm). A 6-mil (0.006 inch; 0.15 mm) polyethylene vapor retarder with joints lapped not less than 6 inches (152 mm) shall be placed between the base course or subgrade and the concrete floor slab, or other *approved* equivalent methods or materials shall be used to retard vapor transmission through the floor slab.

Exception: A vapor retarder is not required:

1. For detached structures accessory to occupancies in Group R-3, such as garages, utility buildings or other unheated facilities.
2. For unheated storage rooms having an area of less than 70 square feet (6.5 m^2) and carports attached to occupancies in Group R-3.
3. For buildings of other occupancies where migration of moisture through the slab from below will not be detrimental to the intended occupancy of the building.

4. For driveways, walks, patios and other flatwork that will not be enclosed at a later date.
5. Where *approved* based on local site conditions.

SECTION 1908
SHOTCRETE

1908.1 General. Shotcrete is mortar or concrete that is pneumatically projected at high velocity onto a surface. Except as specified in this section, shotcrete shall conform to the requirements of this chapter for plain or reinforced concrete.

1908.2 Proportions and materials. Shotcrete proportions shall be selected that allow suitable placement procedures using the delivery equipment selected and shall result in finished in-place hardened shotcrete meeting the strength requirements of this code.

1908.3 Aggregate. Coarse aggregate, if used, shall not exceed $^3/_4$ inch (19.1 mm).

1908.4 Reinforcement. Reinforcement used in shotcrete construction shall comply with the provisions of Sections 1908.4.1 through 1908.4.4.

1908.4.1 Size. The maximum size of reinforcement shall be No. 5 bars unless it is demonstrated by preconstruction tests that adequate encasement of larger bars will be achieved.

1908.4.2 Clearance. When No. 5 or smaller bars are used, there shall be a minimum clearance between parallel reinforcement bars of $2^1/_2$ inches (64 mm). When bars larger than No. 5 are permitted, there shall be a minimum clearance between parallel bars equal to six diameters of the bars used. When two curtains of steel are provided, the curtain nearer the nozzle shall have a minimum spacing equal to 12 bar diameters and the remaining curtain shall have a minimum spacing of six bar diameters.

Exception: Subject to the approval of the *building official*, required clearances shall be reduced where it is demonstrated by preconstruction tests that adequate encasement of the bars used in the design will be achieved.

1908.4.3 Splices. Lap splices of reinforcing bars shall utilize the noncontact lap splice method with a minimum clearance of 2 inches (51 mm) between bars. The use of contact lap splices necessary for support of the reinforcing is permitted when *approved* by the *building official*, based on satisfactory preconstruction tests that show that adequate encasement of the bars will be achieved, and provided that the splice is oriented so that a plane through the center of the spliced bars is perpendicular to the surface of the shotcrete.

1908.4.4 Spirally tied columns. Shotcrete shall not be applied to spirally tied columns.

1908.5 Preconstruction tests. Where preconstruction tests are required by Section 1908.4, a test panel shall be shot, cured, cored or sawn, examined and tested prior to commencement of the project. The sample panel shall be representative of the project and simulate job conditions as closely as possible. The panel thickness and reinforcing shall reproduce the thickest and most congested area specified in the structural design. It shall be shot at the same angle, using the same nozzleman and with the same concrete mix design that will be used on the project. The equipment used in preconstruction testing shall be the same equipment used in the work requiring such testing, unless substitute equipment is *approved* by the *building official*. Reports of preconstruction tests shall be submitted to the *building official* as specified in Section 1704.5.

1908.6 Rebound. Any rebound or accumulated loose aggregate shall be removed from the surfaces to be covered prior to placing the initial or any succeeding layers of shotcrete. Rebound shall not be used as aggregate.

1908.7 Joints. Except where permitted herein, unfinished work shall not be allowed to stand for more than 30 minutes unless edges are sloped to a thin edge. For structural elements that will be under compression and for construction joints shown on the *approved construction documents*, square joints are permitted. Before placing additional material adjacent to previously applied work, sloping and square edges shall be cleaned and wetted.

1908.8 Damage. In-place shotcrete that exhibits sags, sloughs, segregation, honeycombing, sand pockets or other obvious defects shall be removed and replaced. Shotcrete above sags and sloughs shall be removed and replaced while still plastic.

1908.9 Curing. During the curing periods specified herein, shotcrete shall be maintained above 40°F (4°C) and in moist condition.

1908.9.1 Initial curing. Shotcrete shall be kept continuously moist for 24 hours after shotcreting is complete or shall be sealed with an *approved* curing compound.

1908.9.2 Final curing. Final curing shall continue for seven days after shotcreting, or for three days if high-early-strength cement is used, or until the specified strength is obtained. Final curing shall consist of the initial curing process or the shotcrete shall be covered with an *approved* moisture-retaining cover.

1908.9.3 Natural curing. Natural curing shall not be used in lieu of that specified in this section unless the relative humidity remains at or above 85 percent, and is authorized by the *registered design professional* and *approved* by the *building official*.

1908.10 Strength tests. Strength tests for shotcrete shall be made by an *approved agency* on specimens that are representative of the work and which have been water soaked for at least 24 hours prior to testing. When the maximum-size aggregate is larger than $^3/_8$ inch (9.5 mm), specimens shall consist of not less than three 3-inch-diameter (76 mm) cores or 3-inch (76 mm) cubes. When the maximum-size aggregate is $^3/_8$ inch (9.5 mm) or smaller, specimens shall consist of not less than 2-inch-diameter (51 mm) cores or 2-inch (51 mm) cubes.

1908.10.1 Sampling. Specimens shall be taken from the in-place work or from test panels, and shall be taken at least once each shift, but not less than one for each 50 cubic yards (38.2 m^3) of shotcrete.

1908.10.2 Panel criteria. When the maximum-size aggregate is larger than $^3/_8$ inch (9.5 mm), the test panels shall have minimum dimensions of 18 inches by 18 inches (457 mm by 457 mm). When the maximum-size aggregate is $^3/_8$ inch (9.5 mm) or smaller, the test panels shall have minimum dimensions of 12 inches by 12 inches (305 mm by 305 mm). Panels shall be shot in the same position as the work, during the course of the work and by the nozzlemen doing the work. The conditions under which the panels are cured shall be the same as the work.

1908.10.3 Acceptance criteria. The average compressive strength of three cores from the in-place work or a single test panel shall equal or exceed $0.85f'_c$ with no single core less than $0.75\ f'_c$. The average compressive strength of three cubes taken from the in-place work or a single test panel shall equal or exceed f'_c with no individual cube less than $0.88f'_c$. To check accuracy, locations represented by erratic core or cube strengths shall be retested.

➡ *

CHAPTER 20

ALUMINUM

User note: Code change proposals to this chapter will be considered by the IBC – Structural Code Development Committee during the 2016 (Group B) Code Development Cycle. See explanation on page iv.

SECTION 2001
GENERAL

2001.1 Scope. This chapter shall govern the quality, design, fabrication and erection of aluminum.

SECTION 2002
MATERIALS

2002.1 General. Aluminum used for structural purposes in buildings and structures shall comply with AA ASM 35 and AA ADM 1. The *nominal loads* shall be the minimum design loads required by Chapter 16.

CHAPTER 21

MASONRY

User note: Code change proposals to this chapter will be considered by the IBC – Structural Code Development Committee during the 2016 (Group B) Code Development Cycle. See explanation on page iv.

SECTION 2101
GENERAL

2101.1 Scope. This chapter shall govern the materials, design, construction and quality of masonry.

2101.2 Design methods. Masonry shall comply with the provisions of TMS 402/ACI 530/ASCE 5 or TMS 403 as well as applicable requirements of this chapter.

2101.2.1 Masonry veneer. Masonry veneer shall comply with the provisions of Chapter 14.

2101.3 Special inspection. The *special inspection* of masonry shall be as defined in Chapter 17, or an itemized testing and inspection program shall be provided that meets or exceeds the requirements of Chapter 17.

*

SECTION 2102
DEFINITIONS AND NOTATIONS

2102.1 General. The following terms are defined in Chapter 2:

AAC MASONRY.

ADOBE CONSTRUCTION.

Adobe, stabilized.

Adobe, unstabilized.

AREA.

Gross cross-sectional.

Net cross-sectional.

AUTOCLAVED AERATED CONCRETE (AAC).

BED JOINT.

BRICK.

Calcium silicate (sand lime brick).

Clay or shale.

Concrete.

CAST STONE.

CELL.

CHIMNEY.

CHIMNEY TYPES.

High-heat appliance type.

Low-heat appliance type.

Masonry type.

Medium-heat appliance type.

CLEANOUT.

COLLAR JOINT.

DIMENSIONS.

Nominal.

Specified.

FIREPLACE.

FIREPLACE THROAT.

FOUNDATION PIER.

HEAD JOINT.

MASONRY.

Ashlar masonry.

Coursed ashlar.

Glass unit masonry.

Plain masonry.

Random ashlar.

Reinforced masonry.

Solid masonry.

Unreinforced (plain) masonry.

MASONRY UNIT.

Hollow.

Solid.

MORTAR.

MORTAR, SURFACE-BONDING.

PRESTRESSED MASONRY.

RUNNING BOND.

SHEAR WALL.

Detailed plain masonry shear wall.

Intermediate prestressed masonry shear wall.

Intermediate reinforced masonry shear wall.

Ordinary plain masonry shear wall.

Ordinary plain prestressed masonry shear wall.

Ordinary reinforced masonry shear wall.

Special prestressed masonry shear wall.

Special reinforced masonry shear wall.

SPECIFIED.

SPECIFIED COMPRESSIVE STRENGTH OF MASONRY, f'_m.

STONE MASONRY.

Ashlar stone masonry.

Rubble stone masonry.

STRENGTH.

Design strength.

Nominal strength.

Required strength.

TIE, WALL.

TILE, STRUCTURAL CLAY.

WALL.

Cavity wall.

Composite wall.

Dry-stacked, surface-bonded wall.

Masonry-bonded hollow wall.

Parapet wall.

WYTHE.

NOTATIONS.

d_b = Diameter of reinforcement, inches (mm).

F_s = Allowable tensile or compressive stress in reinforcement, psi (MPa).

f_r = Modulus of rupture, psi (MPa).

f'_{AAC} = Specified compressive strength of AAC masonry, the minimum compressive strength for a class of AAC masonry as specified in ASTM C 1386, psi (MPa).

f'_m = Specified compressive strength of masonry at age of 28 days, psi (MPa).

f'_{mi} = Specified compressive strength of masonry at the time of prestress transfer, psi (MPa).

K = The lesser of the masonry cover, clear spacing between adjacent reinforcement, or five times d_b, inches (mm).

L_s = Distance between supports, inches (mm).

l_d = Required development length or lap length of reinforcement, inches (mm).

P = The applied load at failure, pounds (N).

S_t = Thickness of the test specimen measured parallel to the direction of load, inches (mm).

S_w = Width of the test specimen measured parallel to the loading cylinder, inches (mm).

SECTION 2103
MASONRY CONSTRUCTION MATERIALS

2103.1 Masonry units. Concrete masonry units, clay or shale masonry units, stone masonry units, glass unit masonry and AAC masonry units shall comply with Article 2.3 of TMS 602/ACI 503.1/ASCE 6. Architectural cast stone shall conform to ASTM C 1364.

Exception: Structural clay tile for nonstructural use in fireproofing of structural members and in wall furring shall not be required to meet the compressive strength specifications. The fire-resistance rating shall be determined in accordance with ASTM E 119 or UL 263 and shall comply with the requirements of Table 602.

2103.1.1 Second-hand units. Second-hand masonry units shall not be reused unless they conform to the requirements of new units. The units shall be of whole, sound materials and free from cracks and other defects that will interfere with proper laying or use. Old mortar shall be cleaned from the unit before reuse.

2103.2 Mortar. Mortar for masonry construction shall comply with Section 2103.2.1, 2103.2.2, 2103.2.3 or 2103.2.4.

2103.2.1 Masonry mortar. Mortar for use in masonry construction shall conform to Articles 2.1 and 2.6 A of TMS 602/ACI 530.1/ASCE 6.

2103.2.2 Surface-bonding mortar. Surface-bonding mortar shall comply with ASTM C 887. Surface bonding of concrete masonry units shall comply with ASTM C 946.

2103.2.3 Mortars for ceramic wall and floor tile. Portland cement mortars for installing ceramic wall and floor tile shall comply with ANSI A108.1A and ANSI A108.1B and be of the compositions indicated in Table 2103.2.3.

TABLE 2103.2.3
CERAMIC TILE MORTAR COMPOSITIONS

LOCATION	MORTAR	COMPOSITION
Walls	Scratchcoat	1 cement; $^1/_5$ hydrated lime; 4 dry or 5 damp sand
	Setting bed and leveling coat	1 cement; $^1/_2$ hydrated lime; 5 damp sand to 1 cement 1 hydrated lime, 7 damp sand
Floors	Setting bed	1 cement; $^1/_{10}$ hydrated lime; 5 dry or 6 damp sand; or 1 cement; 5 dry or 6 damp sand
Ceilings	Scratchcoat and sand bed	1 cement; $^1/_2$ hydrated lime; $2^1/_2$ dry sand or 3 damp sand

2103.2.3.1 Dry-set Portland cement mortars. Premixed prepared Portland cement mortars, which require only the addition of water and are used in the installation of ceramic tile, shall comply with ANSI A118.1. The shear bond strength for tile set in such mortar shall be as required in accordance with ANSI A118.1. Tile set in dry-set Portland cement mortar shall be installed in accordance with ANSI A108.5.

2103.2.3.2 Latex-modified Portland cement mortar. Latex-modified Portland cement thin-set mortars in which latex is added to dry-set mortar as a replacement for all or part of the gauging water that are used for the installation of ceramic tile shall comply with ANSI A118.4. Tile set in latex-modified Portland cement shall be installed in accordance with ANSI A108.5.

2103.2.3.3 Epoxy mortar. Ceramic tile set and grouted with chemical-resistant epoxy shall comply with ANSI A118.3. Tile set and grouted with epoxy shall be installed in accordance with ANSI A108.6.

2103.2.3.4 Furan mortar and grout. Chemical-resistant furan mortar and grout that are used to install

ceramic tile shall comply with ANSI A118.5. Tile set and grouted with furan shall be installed in accordance with ANSI A108.8.

2103.2.3.5 Modified epoxy-emulsion mortar and grout. Modified epoxy-emulsion mortar and grout that are used to install ceramic tile shall comply with ANSI A118.8. Tile set and grouted with modified epoxy-emulsion mortar and grout shall be installed in accordance with ANSI A108.9.

2103.2.3.6 Organic adhesives. Water-resistant organic adhesives used for the installation of ceramic tile shall comply with ANSI A136.1. The shear bond strength after water immersion shall be not less than 40 psi (275 kPa) for Type I adhesive and not less than 20 psi (138 kPa) for Type II adhesive when tested in accordance with ANSI A136.1. Tile set in organic adhesives shall be installed in accordance with ANSI A108.4.

2103.2.3.7 Portland cement grouts. Portland cement grouts used for the installation of ceramic tile shall comply with ANSI A118.6. Portland cement grouts for tile work shall be installed in accordance with ANSI A108.10.

2103.2.4 Mortar for adhered masonry veneer. Mortar for use with adhered masonry veneer shall conform to ASTM C 270 for Type N or S, or shall comply with ANSI A118.4 for latex-modified Portland cement mortar.

2103.3 Grout. Grout shall comply with Article 2.2 of TMS 602/ACI 530.1/ASCE 6.

2103.4 Metal reinforcement and accessories. Metal reinforcement and accessories shall conform to Article 2.4 of TMS 602/ACI 530.1/ASCE 6. Where unidentified reinforcement is *approved* for use, not less than three tension and three bending tests shall be made on representative specimens of the reinforcement from each shipment and grade of reinforcing steel proposed for use in the work.

SECTION 2104
CONSTRUCTION

2104.1 Masonry construction. Masonry construction shall comply with the requirements of Sections 2104.1.1 and 2104.1.2 and with TMS 602/ACI 530.1/ASCE 6.

2104.1.1 Support on wood. Masonry shall not be supported on wood girders or other forms of wood construction except as permitted in Section 2304.12.

2104.1.2 Molded cornices. Unless structural support and anchorage are provided to resist the overturning moment, the center of gravity of projecting masonry or molded cornices shall lie within the middle one-third of the supporting wall. Terra cotta and metal cornices shall be provided with a structural frame of *approved* noncombustible material anchored in an *approved* manner.

SECTION 2105
QUALITY ASSURANCE

2105.1 General. A quality assurance program shall be used to ensure that the constructed masonry is in compliance with the *approved construction documents*.

The quality assurance program shall comply with the inspection and testing requirements of Chapter 17 and TMS 602/ACI 530.1/ASCE 6.

SECTION 2106
SEISMIC DESIGN

2106.1 Seismic design requirements for masonry. Masonry structures and components shall comply with the requirements in Chapter 7 of TMS 402/ACI 530/ASCE 5 depending on the structure's *seismic design category*.

SECTION 2107
ALLOWABLE STRESS DESIGN

2107.1 General. The design of masonry structures using *allowable stress design* shall comply with Section 2106 and the requirements of Chapters 1 through 8 of TMS 402/ACI 530/ASCE 5 except as modified by Sections 2107.2 through 2107.4.

2107.2 TMS 402/ACI 530/ASCE 5, Section 8.1.6.7.1.1, lap splices. As an alternative to Section 8.1.6.7.1.1, it shall be permitted to design lap splices in accordance with Section 2107.2.1.

2107.2.1 Lap splices. The minimum length of lap splices for reinforcing bars in tension or compression, l_d, shall be

$$l_d = 0.002 d_b f_s \qquad \textbf{(Equation 21-1)}$$

For SI: $l_d = 0.29 d_b f_s$

but not less than 12 inches (305 mm). In no case shall the length of the lapped splice be less than 40 bar diameters.

where:

d_b = Diameter of reinforcement, inches (mm).

f_s = Computed stress in reinforcement due to design loads, psi (MPa).

In regions of moment where the design tensile stresses in the reinforcement are greater than 80 percent of the allowable steel tension stress, F_s, the lap length of splices shall be increased not less than 50 percent of the minimum required length. Other equivalent means of stress transfer to accomplish the same 50 percent increase shall be permitted. Where epoxy coated bars are used, lap length shall be increased by 50 percent.

2107.3 TMS 402/ACI 530/ASCE 5, Section 8.1.6.7, splices of reinforcement. Modify Section 8.1.6.7 as follows:

8.1.6.7 – Splices of reinforcement. Lap splices, welded splices or mechanical splices are permitted in accordance with the provisions of this section. All welding shall conform to AWS D1.4. Welded splices shall be of ASTM A 706 steel

reinforcement. Reinforcement larger than No. 9 (M #29) shall be spliced using mechanical connections in accordance with Section 8.1.6.7.3.

2107.4 TMS 402/ACI 530/ASCE 5, Section 8.3.6, maximum bar size. Add the following to Chapter 8:

8.3.6 – Maximum bar size. The bar diameter shall not exceed one-eighth of the nominal wall thickness and shall not exceed one-quarter of the least dimension of the cell, course or collar joint in which it is placed.

SECTION 2108
STRENGTH DESIGN OF MASONRY

2108.1 General. The design of masonry structures using strength design shall comply with Section 2106 and the requirements of Chapters 1 through 7 and Chapter 9 of TMS 402/ACI 530/ASCE 5, except as modified by Sections 2108.2 through 2108.3.

Exception: AAC masonry shall comply with the requirements of Chapters 1 through 7 and Chapter 11 of TMS 402/ACI 530/ASCE 5.

2108.2 TMS 402/ACI 530/ASCE 5, Section 9.3.3.3, development. Modify the second paragraph of Section 9.3.3.3 as follows:

The required development length of reinforcement shall be determined by Equation (9-16), but shall not be less than 12 inches (305 mm) and need not be greater than 72 d_b.

2108.3 TMS 402/ACI 530/ASCE 5, Section 9.3.3.4, splices. Modify items (c) and (d) of Section 9.3.3.4 as follows:

9.3.3.4 (c) – A welded splice shall have the bars butted and welded to develop at least 125 percent of the yield strength, f_y, of the bar in tension or compression, as required. Welded splices shall be of ASTM A 706 steel reinforcement. Welded splices shall not be permitted in plastic hinge zones of intermediate or special reinforced walls.

9.3.3.4 (d) – Mechanical splices shall be classified as Type 1 or 2 in accordance with Section 18.2.7.1 of ACI 318. Type 1 mechanical splices shall not be used within a plastic hinge zone or within a beam-column joint of intermediate or special reinforced masonry shear walls. Type 2 mechanical splices are permitted in any location within a member.

SECTION 2109
EMPIRICAL DESIGN OF MASONRY

2109.1 General. Empirically designed masonry shall conform to the requirements of Appendix A of TMS 402/ACI 530/ASCE 5, except where otherwise noted in this section.

2109.1.1 Limitations. The use of empirical design of masonry shall be limited as noted in Section A.1.2 of TMS 402/ACI 530/ASCE 5. The use of dry-stacked, surface-bonded masonry shall be prohibited in *Risk Category* IV structures. In buildings that exceed one or more of the limitations of Section A.1.2 of TMS 402/ACI 530/ASCE 5, masonry shall be designed in accordance with the engineered design provisions of Section 2101.2 or the foundation wall provisions of Section 1807.1.5.

Section A.1.2.2 of TMS 402/ACI 530/ASCE 5 shall be modified as follows:

A.1.2.2 – *Wind.* Empirical requirements shall not apply to the design or construction of masonry for buildings, parts of buildings, or other structures to be located in areas where V_{asd} as determined in accordance with Section 1609.3.1 of the *International Building Code* exceeds 110 mph.

2109.2 Surface-bonded walls. Dry-stacked, surface-bonded concrete masonry walls shall comply with the requirements of Appendix A of TMS 402/ACI 530/ASCE 5, except where otherwise noted in this section.

2109.2.1 Strength. Dry-stacked, surface-bonded concrete masonry walls shall be of adequate strength and proportions to support all superimposed loads without exceeding the allowable stresses listed in Table 2109.2.1. Allowable stresses not specified in Table 2109.2.1 shall comply with the requirements of TMS 402/ACI 530/ASCE 5.

TABLE 2109.2.1
ALLOWABLE STRESS GROSS CROSS-SECTIONAL AREA FOR DRY-STACKED, SURFACE-BONDED CONCRETE MASONRY WALLS

DESCRIPTION	MAXIMUM ALLOWABLE STRESS (psi)
Compression standard block	45
Flexural tension	
Horizontal span	30
Vertical span	18
Shear	10

For SI: 1 pound per square inch = 0.006895 MPa.

2109.2.2 Construction. Construction of dry-stacked, surface-bonded masonry walls, including stacking and leveling of units, mixing and application of mortar and curing and protection shall comply with ASTM C 946.

2109.3 Adobe construction. Adobe construction shall comply with this section and shall be subject to the requirements of this code for Type V construction, Appendix A of TMS 402/ACI 530/ASCE 5, and this section.

2109.3.1 Unstabilized adobe. Unstabilized adobe shall comply with Sections 2109.3.1.1 through 2109.3.1.4.

2109.3.1.1 Compressive strength. Adobe units shall have an average compressive strength of 300 psi (2068 kPa) when tested in accordance with ASTM C 67. Five samples shall be tested and no individual unit is permitted to have a compressive strength of less than 250 psi (1724 kPa).

2109.3.1.2 Modulus of rupture. Adobe units shall have an average modulus of rupture of 50 psi (345 kPa) when tested in accordance with the following procedure. Five samples shall be tested and no individual

unit shall have a modulus of rupture of less than 35 psi (241 kPa).

2109.3.1.2.1 Support conditions. A cured unit shall be simply supported by 2-inch-diameter (51 mm) cylindrical supports located 2 inches (51 mm) in from each end and extending the full width of the unit.

2109.3.1.2.2 Loading conditions. A 2-inch-diameter (51 mm) cylinder shall be placed at midspan parallel to the supports.

2109.3.1.2.3 Testing procedure. A vertical load shall be applied to the cylinder at the rate of 500 pounds per minute (37 N/s) until failure occurs.

2109.3.1.2.4 Modulus of rupture determination. The modulus of rupture shall be determined by the equation:

$$f_r = 3\,PL_s / 2\,S_w(S_t^2) \qquad \textbf{(Equation 21-2)}$$

where, for the purposes of this section only:

S_w = Width of the test specimen measured parallel to the loading cylinder, inches (mm).

f_r = Modulus of rupture, psi (MPa).

L_s = Distance between supports, inches (mm).

S_t = Thickness of the test specimen measured parallel to the direction of load, inches (mm).

P = The applied load at failure, pounds (N).

2109.3.1.3 Moisture content requirements. Adobe units shall have a moisture content not exceeding 4 percent by weight.

2109.3.1.4 Shrinkage cracks. Adobe units shall not contain more than three shrinkage cracks and any single shrinkage crack shall not exceed 3 inches (76 mm) in length or $^1/_8$ inch (3.2 mm) in width.

2109.3.2 Stabilized adobe. Stabilized adobe shall comply with Section 2109.3.1 for unstabilized adobe in addition to Sections 2109.3.2.1 and 2109.3.2.2.

2109.3.2.1 Soil requirements. Soil used for stabilized adobe units shall be chemically compatible with the stabilizing material.

2109.3.2.2 Absorption requirements. A 4-inch (102 mm) cube, cut from a stabilized adobe unit dried to a constant weight in a ventilated oven at 212°F to 239°F (100°C to 115°C), shall not absorb more than $2^1/_2$ percent moisture by weight when placed upon a constantly water-saturated, porous surface for seven days. A minimum of five specimens shall be tested and each specimen shall be cut from a separate unit.

2109.3.3 Allowable stress. The allowable compressive stress based on gross cross-sectional area of adobe shall not exceed 30 psi (207 kPa).

2109.3.3.1 Bolts. Bolt values shall not exceed those set forth in Table 2109.3.3.1.

TABLE 2109.3.3.1
ALLOWABLE SHEAR ON BOLTS IN ADOBE MASONRY

DIAMETER OF BOLTS (inches)	MINIMUM EMBEDMENT (inches)	SHEAR (pounds)
$^1/_2$	—	—
$^5/_8$	12	200
$^3/_4$	15	300
$^7/_8$	18	400
1	21	500
$1^1/_8$	24	600

For SI: 1 inch = 25.4 mm, 1 pound = 4.448 N.

2109.3.4 Detailed requirements. Adobe construction shall comply with Sections 2109.3.4.1 through 2109.3.4.9.

2109.3.4.1 Number of stories. Adobe construction shall be limited to buildings not exceeding one *story*, except that two-*story* construction is allowed when designed by a *registered design professional*.

2109.3.4.2 Mortar. Mortar for adobe construction shall comply with Sections 2109.3.4.2.1 and 2109.3.4.2.2.

2109.3.4.2.1 General. Mortar for stabilized adobe units shall comply with this chapter or adobe soil. Adobe soil used as mortar shall comply with material requirements for stabilized adobe. Mortar for unstabilized adobe shall be Portland cement mortar.

2109.3.4.2.2 Mortar joints. Adobe units shall be laid with full head and bed joints and in full running bond.

2109.3.4.3 Parapet walls. Parapet walls constructed of adobe units shall be waterproofed.

2109.3.4.4 Wall thickness. The minimum thickness of *exterior walls* in one-story buildings shall be 10 inches (254 mm). The walls shall be laterally supported at intervals not exceeding 24 feet (7315 mm). The minimum thickness of interior *load-bearing walls* shall be 8 inches (203 mm). In no case shall the unsupported height of any wall constructed of adobe units exceed 10 times the thickness of such wall.

2109.3.4.5 Foundations. Foundations for adobe construction shall be in accordance with Sections 2109.3.4.5.1 and 2109.3.4.5.2.

2109.3.4.5.1 Foundation support. Walls and partitions constructed of adobe units shall be supported by foundations or footings that extend not less than 6 inches (152 mm) above adjacent ground surfaces and are constructed of solid masonry (excluding adobe) or concrete. Footings and foundations shall comply with Chapter 18.

2109.3.4.5.2 Lower course requirements. Stabilized adobe units shall be used in adobe walls for the first 4 inches (102 mm) above the finished first-floor elevation.

2109.3.4.6 Isolated piers or columns. Adobe units shall not be used for isolated piers or columns in a load-

bearing capacity. Walls less than 24 inches (610 mm) in length shall be considered isolated piers or columns.

2109.3.4.7 Tie beams. *Exterior walls* and interior *load-bearing walls* constructed of adobe units shall have a continuous tie beam at the level of the floor or roof bearing and meeting the following requirements.

2109.3.4.7.1 Concrete tie beams. Concrete tie beams shall be a minimum depth of 6 inches (152 mm) and a minimum width of 10 inches (254 mm). Concrete tie beams shall be continuously reinforced with a minimum of two No. 4 reinforcing bars. The specified compressive strength of concrete shall be at least 2,500 psi (17.2 MPa).

2109.3.4.7.2 Wood tie beams. Wood tie beams shall be solid or built up of lumber having a minimum nominal thickness of 1 inch (25 mm), and shall have a minimum depth of 6 inches (152 mm) and a minimum width of 10 inches (254 mm). Joints in wood tie beams shall be spliced a minimum of 6 inches (152 mm). No splices shall be allowed within 12 inches (305 mm) of an opening. Wood used in tie beams shall be *approved* naturally decay-resistant or preservative-treated wood.

2109.3.4.8 Exterior finish. *Exterior walls* constructed of unstabilized adobe units shall have their exterior surface covered with a minimum of two coats of Portland cement plaster having a minimum thickness of $^3/_4$ inch (19.1 mm) and conforming to ASTM C 926. Lathing shall comply with ASTM C 1063. Fasteners shall be spaced at 16 inches (406 mm) on center maximum. Exposed wood surfaces shall be treated with an *approved* wood preservative or other protective coating prior to lath application.

2109.3.4.9 Lintels. Lintels shall be considered structural members and shall be designed in accordance with the applicable provisions of Chapter 16.

SECTION 2110
GLASS UNIT MASONRY

2110.1 General. Glass unit masonry construction shall comply with Chapter 13 of TMS 402/ACI 530/ASCE 5 and this section.

2110.1.1 Limitations. Solid or hollow *approved* glass block shall not be used in fire walls, party walls, fire barriers, fire partitions or smoke barriers, or for load-bearing construction. Such blocks shall be erected with mortar and reinforcement in metal channel-type frames, structural frames, masonry or concrete recesses, embedded panel anchors as provided for both exterior and interior walls or other *approved* joint materials. Wood strip framing shall not be used in walls required to have a fire-resistance rating by other provisions of this code.

Exceptions:

1. Glass-block assemblies having a fire protection rating of not less than $^3/_4$ hour shall be permitted as opening protectives in accordance with Section 716 in fire barriers, fire partitions and smoke barriers that have a required fire-resistance rating of 1 hour or less and do not enclose exit stairways and ramps or exit passageways.
2. Glass-block assemblies as permitted in Section 404.6, Exception 2.

SECTION 2111
MASONRY FIREPLACES

2111.1 General. The construction of masonry fireplaces, consisting of concrete or masonry, shall be in accordance with this section.

2111.2 Fireplace drawings. The *construction documents* shall describe in sufficient detail the location, size and construction of masonry fireplaces. The thickness and characteristics of materials and the clearances from walls, partitions and ceilings shall be indicated. **

2111.3 Footings and foundations. Footings for masonry fireplaces and their chimneys shall be constructed of concrete or solid masonry at least 12 inches (305 mm) thick and shall extend at least 6 inches (153 mm) beyond the face of the fireplace or foundation wall on all sides. Footings shall be founded on natural undisturbed earth or engineered fill below frost depth. In areas not subjected to freezing, footings shall be at least 12 inches (305 mm) below finished grade.

2111.3.1 Ash dump cleanout. Cleanout openings, located within foundation walls below fireboxes, when provided, shall be equipped with ferrous metal or masonry doors and frames constructed to remain tightly closed, except when in use. Cleanouts shall be accessible and located so that ash removal will not create a hazard to combustible materials.

2111.4 Seismic reinforcement. In structures assigned to *Seismic Design Category* A or B, seismic reinforcement is not required. In structures assigned to *Seismic Design Category* C or D, masonry fireplaces shall be reinforced and anchored in accordance with Sections 2111.4.1, 2111.4.2 and 2111.5. In structures assigned to *Seismic Design Category* E or F, masonry fireplaces shall be reinforced in accordance with the requirements of Sections 2101 through 2108.

2111.4.1 Vertical reinforcing. For fireplaces with chimneys up to 40 inches (1016 mm) wide, four No. 4 continuous vertical bars, anchored in the foundation, shall be placed in the concrete between wythes of solid masonry or within the cells of hollow unit masonry and grouted in accordance with Section 2103.3. For fireplaces with chimneys greater than 40 inches (1016 mm) wide, two additional No. 4 vertical bars shall be provided for each additional 40 inches (1016 mm) in width or fraction thereof.

2111.4.2 Horizontal reinforcing. Vertical reinforcement shall be placed enclosed within $^1/_4$-inch (6.4 mm) ties or other reinforcing of equivalent net cross-sectional area, spaced not to exceed 18 inches (457 mm) on center in concrete; or placed in the bed joints of unit masonry at a minimum of every 18 inches (457 mm) of vertical height. Two

such ties shall be provided at each bend in the vertical bars.

2111.5 Seismic anchorage. Masonry fireplaces and foundations shall be anchored at each floor, ceiling or roof line more than 6 feet (1829 mm) above grade with two $^3/_{16}$-inch by 1-inch (4.8 mm by 25 mm) straps embedded a minimum of 12 inches (305 mm) into the chimney. Straps shall be hooked around the outer bars and extend 6 inches (152 mm) beyond the bend. Each strap shall be fastened to a minimum of four floor joists with two $^1/_2$-inch (12.7 mm) bolts.

Exception: Seismic anchorage is not required for the following:

1. In structures assigned to *Seismic Design Category* A or B.
2. Where the masonry fireplace is constructed completely within the exterior walls.

2111.6 Firebox walls. Masonry fireboxes shall be constructed of solid masonry units, hollow masonry units grouted solid, stone or concrete. When a lining of firebrick at least 2 inches (51 mm) in thickness or other *approved* lining is provided, the minimum thickness of back and sidewalls shall each be 8 inches (203 mm) of solid masonry, including the lining. The width of joints between firebricks shall be not greater than $^1/_4$ inch (6.4 mm). When no lining is provided, the total minimum thickness of back and sidewalls shall be 10 inches (254 mm) of solid masonry. Firebrick shall conform to ASTM C 27 or ASTM C 1261 and shall be laid with medium-duty refractory mortar conforming to ASTM C 199.

2111.6.1 Steel fireplace units. Steel fireplace units are permitted to be installed with solid masonry to form a masonry fireplace provided they are installed according to either the requirements of their listing or the requirements of this section. Steel fireplace units incorporating a steel firebox lining shall be constructed with steel not less than $^1/_4$ inch (6.4 mm) in thickness, and an air-circulating chamber which is ducted to the interior of the building. The firebox lining shall be encased with solid masonry to provide a total thickness at the back and sides of not less than 8 inches (203 mm), of which not less than 4 inches (102 mm) shall be of solid masonry or concrete. Circulating air ducts employed with steel fireplace units shall be constructed of metal or masonry.

2111.7 Firebox dimensions. The firebox of a concrete or masonry fireplace shall have a minimum depth of 20 inches (508 mm). The throat shall be not less than 8 inches (203 mm) above the fireplace opening. The throat opening shall not be less than 4 inches (102 mm) in depth. The cross-sectional area of the passageway above the firebox, including the throat, damper and smoke chamber, shall be not less than the cross-sectional area of the flue.

Exception: Rumford fireplaces shall be permitted provided that the depth of the fireplace is not less than 12 inches (305 mm) and at least one-third of the width of the fireplace opening, and the throat is not less than 12 inches (305 mm) above the lintel, and at least $^1/_{20}$ the cross-sectional area of the fireplace opening.

2111.8 Lintel and throat. Masonry over a fireplace opening shall be supported by a lintel of noncombustible material. The minimum required bearing length on each end of the fireplace opening shall be 4 inches (102 mm). The fireplace throat or damper shall be located not less than 8 inches (203 mm) above the top of the fireplace opening.

2111.8.1 Damper. Masonry fireplaces shall be equipped with a ferrous metal damper located not less than 8 inches (203 mm) above the top of the fireplace opening. Dampers shall be installed in the fireplace or at the top of the flue venting the fireplace, and shall be operable from the room containing the fireplace. Damper controls shall be permitted to be located in the fireplace.

2111.9 Smoke chamber walls. Smoke chamber walls shall be constructed of solid masonry units, hollow masonry units grouted solid, stone or concrete. The total minimum thickness of front, back and sidewalls shall be 8 inches (203 mm) of solid masonry. The inside surface shall be parged smooth with refractory mortar conforming to ASTM C 199. When a lining of firebrick not less than 2 inches (51 mm) thick, or a lining of vitrified clay not less than $^5/_8$ inch (15.9 mm) thick, is provided, the total minimum thickness of front, back and sidewalls shall be 6 inches (152 mm) of solid masonry, including the lining. Firebrick shall conform to ASTM C 1261 and shall be laid with refractory mortar conforming to ASTM C 199. Vitrified clay linings shall conform to ASTM C 315.

2111.9.1 Smoke chamber dimensions. The inside height of the smoke chamber from the fireplace throat to the beginning of the flue shall be not greater than the inside width of the fireplace opening. The inside surface of the smoke chamber shall not be inclined more than 45 degrees (0.76 rad) from vertical when prefabricated smoke chamber linings are used or when the smoke chamber walls are rolled or sloped rather than corbeled. When the inside surface of the smoke chamber is formed by corbeled masonry, the walls shall not be corbeled more than 30 degrees (0.52 rad) from vertical.

2111.10 Hearth and hearth extension. Masonry fireplace hearths and hearth extensions shall be constructed of concrete or masonry, supported by noncombustible materials, and reinforced to carry their own weight and all imposed loads. No combustible material shall remain against the underside of hearths or hearth extensions after construction.

2111.10.1 Hearth thickness. The minimum thickness of fireplace hearths shall be 4 inches (102 mm).

2111.10.2 Hearth extension thickness. The minimum thickness of hearth extensions shall be 2 inches (51 mm).

Exception: When the bottom of the firebox opening is raised not less than 8 inches (203 mm) above the top of the hearth extension, a hearth extension of not less than $^3/_8$-inch-thick (9.5 mm) brick, concrete, stone, tile or other *approved* noncombustible material is permitted.

2111.11 Hearth extension dimensions. Hearth extensions shall extend not less than 16 inches (406 mm) in front of, and not less than 8 inches (203 mm) beyond, each side of the fireplace opening. Where the fireplace opening is 6 square feet

(0.557 m^2) or larger, the hearth extension shall extend not less than 20 inches (508 mm) in front of, and not less than 12 inches (305 mm) beyond, each side of the fireplace opening.

2111.12 Fireplace clearance. Any portion of a masonry fireplace located in the interior of a building or within the *exterior wall* of a building shall have a clearance to combustibles of not less than 2 inches (51 mm) from the front faces and sides of masonry fireplaces and not less than 4 inches (102 mm) from the back faces of masonry fireplaces. The airspace shall not be filled, except to provide fireblocking in accordance with Section 2111.13.

Exceptions:

1. Masonry fireplaces *listed* and *labeled* for use in contact with combustibles in accordance with UL 127 and installed in accordance with the manufacturer's instructions are permitted to have combustible material in contact with their exterior surfaces.
2. When masonry fireplaces are constructed as part of masonry or concrete walls, combustible materials shall not be in contact with the masonry or concrete walls less than 12 inches (306 mm) from the inside surface of the nearest firebox lining.
3. Exposed combustible *trim* and the edges of sheathing materials, such as wood siding, flooring and drywall, are permitted to abut the masonry fireplace sidewalls and hearth extension, in accordance with Figure 2111.12, provided such combustible *trim* or sheathing is not less than 12 inches (306 mm) from the inside surface of the nearest firebox lining.
4. Exposed combustible mantels or *trim* is permitted to be placed directly on the masonry fireplace front surrounding the fireplace opening, provided such combustible materials shall not be placed within 6 inches (153 mm) of a fireplace opening. Combustible material directly above and within 12 inches (305 mm) of the fireplace opening shall not project more than $^1/_8$ inch (3.2 mm) for each 1-inch (25 mm) distance from such opening. Combustible materials located along the sides of the fireplace opening that project more than $1^1/_2$ inches (38 mm) from the face of the fireplace shall have an additional clearance equal to the projection.

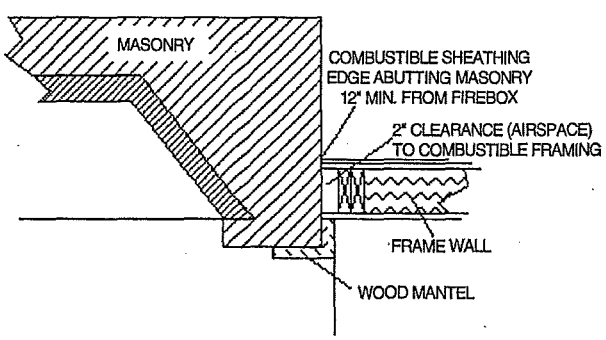

For SI: 1 inch = 25.4 mm

FIGURE 2111.12
ILLUSTRATION OF EXCEPTION TO FIREPLACE CLEARANCE PROVISION

2111.13 Fireplace fireblocking. All spaces between fireplaces and floors and ceilings through which fireplaces pass shall be fireblocked with noncombustible material securely fastened in place. The fireblocking of spaces between wood joists, beams or headers shall be to a depth of 1 inch (25 mm) and shall only be placed on strips of metal or metal lath laid across the spaces between combustible material and the chimney.

2111.14 Exterior air. Factory-built or masonry fireplaces covered in this section shall be equipped with an exterior air supply to ensure proper fuel combustion unless the room is mechanically ventilated and controlled so that the indoor pressure is neutral or positive.

2111.14.1 Factory-built fireplaces. Exterior combustion air ducts for factory-built fireplaces shall be *listed* components of the fireplace, and installed according to the fireplace manufacturer's instructions.

2111.14.2 Masonry fireplaces. *Listed* combustion air ducts for masonry fireplaces shall be installed according to the terms of their listing and manufacturer's instructions.

2111.14.3 Exterior air intake. The exterior air intake shall be capable of providing all combustion air from the exterior of the *dwelling*. The exterior air intake shall not be located within a garage, *attic*, basement or crawl space of the *dwelling* nor shall the air intake be located at an elevation higher than the firebox. The exterior air intake shall be covered with a corrosion-resistant screen of $^1/_4$-inch (6.4 mm) mesh.

2111.14.4 Clearance. Unlisted combustion air ducts shall be installed with a minimum 1-inch (25 mm) clearance to combustibles for all parts of the duct within 5 feet (1524 mm) of the duct outlet.

2111.14.5 Passageway. The combustion air passageway shall be not less than 6 square inches (3870 mm^2) and not more than 55 square inches (0.035 m^2), except that combustion air systems for *listed* fireplaces or for fireplaces tested for emissions shall be constructed according to the fireplace manufacturer's instructions.

2111.14.6 Outlet. The exterior air outlet is permitted to be located in the back or sides of the firebox chamber or within 24 inches (610 mm) of the firebox opening on or near the floor. The outlet shall be closable and designed to prevent burning material from dropping into concealed combustible spaces.

SECTION 2112
MASONRY HEATERS

2112.1 Definition. A masonry heater is a heating appliance constructed of concrete or solid masonry, hereinafter referred to as "masonry," which is designed to absorb and store heat from a solid fuel fire built in the firebox by routing the exhaust gases through internal heat exchange channels in which the flow path downstream of the firebox may include flow in a horizontal or downward direction before entering

the chimney and which delivers heat by radiation from the masonry surface of the heater.

2112.2 Installation. Masonry heaters shall be installed in accordance with this section and comply with one of the following:

1. Masonry heaters shall comply with the requirements of ASTM E 1602.
2. Masonry heaters shall be *listed* and *labeled* in accordance with UL 1482 or EN 15250 and installed in accordance with the manufacturer's instructions.

2112.3 Footings and foundation. The firebox floor of a masonry heater shall be a minimum thickness of 4 inches (102 mm) of noncombustible material and be supported on a noncombustible footing and foundation in accordance with Section 2113.2.

2112.4 Seismic reinforcing. In structures assigned to *Seismic Design Category* D, E or F, masonry heaters shall be anchored to the masonry foundation in accordance with Section 2113.3. Seismic reinforcing shall not be required within the body of a masonry heater with a height that is equal to or less than 3.5 times its body width and where the masonry chimney serving the heater is not supported by the body of the heater. Where the masonry chimney shares a common wall with the facing of the masonry heater, the chimney portion of the structure shall be reinforced in accordance with Section 2113.

2112.5 Masonry heater clearance. Combustible materials shall not be placed within 36 inches (914 mm) or the distance of the allowed reduction method from the outside surface of a masonry heater in accordance with NFPA 211, Section 12.6, and the required space between the heater and combustible material shall be fully vented to permit the free flow of air around all heater surfaces.

Exceptions:

1. Where the masonry heater wall thickness is at least 8 inches (203 mm) of solid masonry and the wall thickness of the heat exchange channels is not less than 5 inches (127 mm) of solid masonry, combustible materials shall not be placed within 4 inches (102 mm) of the outside surface of a masonry heater. A clearance of not less than 8 inches (203 mm) shall be provided between the gas-tight capping slab of the heater and a combustible ceiling.
2. Masonry heaters *listed* and *labeled* in accordance with UL 1482 or EN 15250 and installed in accordance with the manufacturer's instructions.

SECTION 2113
MASONRY CHIMNEYS

2113.1 General. The construction of masonry chimneys consisting of solid masonry units, hollow masonry units grouted solid, stone or concrete shall be in accordance with this section.

2113.2 Footings and foundations. Footings for masonry chimneys shall be constructed of concrete or solid masonry not less than 12 inches (305 mm) thick and shall extend at least 6 inches (152 mm) beyond the face of the foundation or support wall on all sides. Footings shall be founded on natural undisturbed earth or engineered fill below frost depth. In areas not subjected to freezing, footings shall be not less than 12 inches (305 mm) below finished grade.

2113.3 Seismic reinforcement. In structures assigned to *Seismic Design Category* A or B, seismic reinforcement is not required. In structures assigned to *Seismic Design Category* C or D, masonry chimneys shall be reinforced and anchored in accordance with Sections 2113.3.1, 2113.3.2 and 2113.4. In structures assigned to *Seismic Design Category* E or F, masonry chimneys shall be reinforced in accordance with the requirements of Sections 2101 through 2108 and anchored in accordance with Section 2113.4.

2113.3.1 Vertical reinforcement. For chimneys up to 40 inches (1016 mm) wide, four No. 4 continuous vertical bars anchored in the foundation shall be placed in the concrete between wythes of solid masonry or within the cells of hollow unit masonry and grouted in accordance with Section 2103.3. Grout shall be prevented from bonding with the flue liner so that the flue liner is free to move with thermal expansion. For chimneys greater than 40 inches (1016 mm) wide, two additional No. 4 vertical bars shall be provided for each additional 40 inches (1016 mm) in width or fraction thereof.

2113.3.2 Horizontal reinforcement. Vertical reinforcement shall be placed enclosed within $^1/_4$-inch (6.4 mm) ties, or other reinforcing of equivalent net cross-sectional area, spaced not to exceed 18 inches (457 mm) on center in concrete, or placed in the bed joints of unit masonry, at not less than every 18 inches (457 mm) of vertical height. Two such ties shall be provided at each bend in the vertical bars.

2113.4 Seismic anchorage. Masonry chimneys and foundations shall be anchored at each floor, ceiling or roof line more than 6 feet (1829 mm) above grade with two $^3/_{16}$-inch by 1-inch (4.8 mm by 25 mm) straps embedded not less than 12 inches (305 mm) into the chimney. Straps shall be hooked around the outer bars and extend 6 inches (152 mm) beyond the bend. Each strap shall be fastened to not less than four floor joists with two $^1/_2$-inch (12.7 mm) bolts.

Exception: Seismic anchorage is not required for the following;

1. In structures assigned to *Seismic Design Category* A or B.
2. Where the masonry fireplace is constructed completely within the exterior walls.

2113.5 Corbeling. Masonry chimneys shall not be corbeled more than half of the chimney's wall thickness from a wall or foundation, nor shall a chimney be corbeled from a wall or foundation that is less than 12 inches (305 mm) in thickness unless it projects equally on each side of the wall, except that on the second *story* of a two-story *dwelling*, corbeling of chimneys on the exterior of the enclosing walls is permitted to equal the wall thickness. The projection of a single course shall not exceed one-half the unit height or one-third of the unit bed depth, whichever is less.

2113.6 Changes in dimension. The chimney wall or chimney flue lining shall not change in size or shape within 6 inches (152 mm) above or below where the chimney passes through floor components, ceiling components or roof components.

2113.7 Offsets. Where a masonry chimney is constructed with a fireclay flue liner surrounded by one wythe of masonry, the maximum offset shall be such that the centerline of the flue above the offset does not extend beyond the center of the chimney wall below the offset. Where the chimney offset is supported by masonry below the offset in an *approved* manner, the maximum offset limitations shall not apply. Each individual corbeled masonry course of the offset shall not exceed the projection limitations specified in Section 2113.5.

2113.8 Additional load. Chimneys shall not support loads other than their own weight unless they are designed and constructed to support the additional load. Masonry chimneys are permitted to be constructed as part of the masonry walls or concrete walls of the building.

2113.9 Termination. Chimneys shall extend not less than 2 feet (610 mm) higher than any portion of the building within 10 feet (3048 mm), but shall not be less than 3 feet (914 mm) above the highest point where the chimney passes through the roof.

2113.9.1 Chimney caps. Masonry chimneys shall have a concrete, metal or stone cap, sloped to shed water, a drip edge and a caulked bond break around any flue liners in accordance with ASTM C 1283.

2113.9.2 Spark arrestors. Where a spark arrestor is installed on a masonry chimney, the spark arrestor shall meet all of the following requirements:

1. The net free area of the arrestor shall be not less than four times the net free area of the outlet of the chimney flue it serves.
2. The arrestor screen shall have heat and corrosion resistance equivalent to 19-gage galvanized steel or 24-gage stainless steel.
3. Openings shall not permit the passage of spheres having a diameter greater than $^1/_2$ inch (12.7 mm) nor block the passage of spheres having a diameter less than $^3/_8$ inch (9.5 mm).
4. The spark arrestor shall be accessible for cleaning and the screen or chimney cap shall be removable to allow for cleaning of the chimney flue.

2113.9.3 Rain caps. Where a masonry or metal rain cap is installed on a masonry chimney, the net free area under the cap shall be not less than four times the net free area of the outlet of the chimney flue it serves.

2113.10 Wall thickness. Masonry chimney walls shall be constructed of concrete, solid masonry units or hollow masonry units grouted solid with not less than 4 inches (102 mm) nominal thickness.

2113.10.1 Masonry veneer chimneys. Where masonry is used as veneer for a framed chimney, through flashing and weep holes shall be provided as required by Chapter 14.

2113.11 Flue lining (material). Masonry chimneys shall be lined. The lining material shall be appropriate for the type of appliance connected, according to the terms of the appliance listing and the manufacturer's instructions.

2113.11.1 Residential-type appliances (general). Flue lining systems shall comply with one of the following:

1. Clay flue lining complying with the requirements of ASTM C 315.
2. *Listed* chimney lining systems complying with UL 1777.
3. Factory-built chimneys or chimney units *listed* for installation within masonry chimneys.
4. Other *approved* materials that will resist corrosion, erosion, softening or cracking from flue gases and condensate at temperatures up to 1,800°F (982°C).

2113.11.1.1 Flue linings for specific appliances. Flue linings other than those covered in Section 2113.11.1 intended for use with specific appliances shall comply with Sections 2113.11.1.2 through 2113.11.1.4 and Sections 2113.11.2 and 2113.11.3.

2113.11.1.2 Gas appliances. Flue lining systems for gas appliances shall be in accordance with the *International Fuel Gas Code*.

2113.11.1.3 Pellet fuel-burning appliances. Flue lining and vent systems for use in masonry chimneys with pellet fuel-burning appliances shall be limited to flue lining systems complying with Section 2113.11.1 and pellet vents *listed* for installation within masonry chimneys (see Section 2113.11.1.5 for marking).

2113.11.1.4 Oil-fired appliances approved for use with L-vent. Flue lining and vent systems for use in masonry chimneys with oil-fired appliances *approved* for use with Type L vent shall be limited to flue lining systems complying with Section 2113.11.1 and *listed* chimney liners complying with UL 641 (see Section 2113.11.1.5 for marking).

2113.11.1.5 Notice of usage. When a flue is relined with a material not complying with Section 2113.11.1, the chimney shall be plainly and permanently identified by a *label* attached to a wall, ceiling or other conspicuous location adjacent to where the connector enters the chimney. The *label* shall include the following message or equivalent language: "This chimney is for use only with (type or category of appliance) that burns (type of fuel). Do not connect other types of appliances."

2113.11.2 Concrete and masonry chimneys for medium-heat appliances.

2113.11.2.1 General. Concrete and masonry chimneys for medium-heat appliances shall comply with Sections 2113.1 through 2113.5.

2113.11.2.2 Construction. Chimneys for medium-heat appliances shall be constructed of solid masonry units or of concrete with walls not less than 8 inches (203 mm) thick, or with stone masonry not less than 12 inches (305 mm) thick.

2113.11.2.3 Lining. Concrete and masonry chimneys shall be lined with an *approved* medium-duty refractory brick not less than $4^1/_2$ inches (114 mm) thick laid on the $4^1/_2$-inch bed (114 mm) in an *approved* medium-duty refractory mortar. The lining shall start 2 feet (610 mm) or more below the lowest chimney connector entrance. Chimneys terminating 25 feet (7620 mm) or less above a chimney connector entrance shall be lined to the top.

2113.11.2.4 Multiple passageway. Concrete and masonry chimneys containing more than one passageway shall have the liners separated by a minimum 4-inch-thick (102 mm) concrete or solid masonry wall.

2113.11.2.5 Termination height. Concrete and masonry chimneys for medium-heat appliances shall extend not less than 10 feet (3048 mm) higher than any portion of any building within 25 feet (7620 mm).

2113.11.2.6 Clearance. A minimum clearance of 4 inches (102 mm) shall be provided between the exterior surfaces of a concrete or masonry chimney for medium-heat appliances and combustible material.

2113.11.3 Concrete and masonry chimneys for high-heat appliances.

2113.11.3.1 General. Concrete and masonry chimneys for high-heat appliances shall comply with Sections 2113.1 through 2113.5.

2113.11.3.2 Construction. Chimneys for high-heat appliances shall be constructed with double walls of solid masonry units or of concrete, each wall to be not less than 8 inches (203 mm) thick with a minimum airspace of 2 inches (51 mm) between the walls.

2113.11.3.3 Lining. The inside of the interior wall shall be lined with an *approved* high-duty refractory brick, not less than $4^1/_2$ inches (114 mm) thick laid on the $4^1/_2$-inch bed (114 mm) in an *approved* high-duty refractory mortar. The lining shall start at the base of the chimney and extend continuously to the top.

2113.11.3.4 Termination height. Concrete and masonry chimneys for high-heat appliances shall extend not less than 20 feet (6096 mm) higher than any portion of any building within 50 feet (15 240 mm).

2113.11.3.5 Clearance. Concrete and masonry chimneys for high-heat appliances shall have *approved* clearance from buildings and structures to prevent overheating combustible materials, permit inspection and maintenance operations on the chimney and prevent danger of burns to persons.

2113.12 Clay flue lining (installation). Clay flue liners shall be installed in accordance with ASTM C 1283 and extend from a point not less than 8 inches (203 mm) below the lowest inlet or, in the case of fireplaces, from the top of the smoke chamber to a point above the enclosing walls. The lining shall be carried up vertically, with a maximum slope no greater than 30 degrees (0.52 rad) from the vertical.

Clay flue liners shall be laid in medium-duty nonwater-soluble refractory mortar conforming to ASTM C 199 with tight mortar joints left smooth on the inside and installed to maintain an airspace or insulation not to exceed the thickness of the flue liner separating the flue liners from the interior face of the chimney masonry walls. Flue lining shall be supported on all sides. Only enough mortar shall be placed to make the joint and hold the liners in position.

2113.13 Additional requirements.

2113.13.1 Listed materials. *Listed* materials used as flue linings shall be installed in accordance with the terms of their listings and the manufacturer's instructions.

2113.13.2 Space around lining. The space surrounding a chimney lining system or vent installed within a masonry chimney shall not be used to vent any other appliance.

Exception: This shall not prevent the installation of a separate flue lining in accordance with the manufacturer's instructions.

2113.14 Multiple flues. When two or more flues are located in the same chimney, masonry wythes shall be built between adjacent flue linings. The masonry wythes shall be at least 4 inches (102 mm) thick and bonded into the walls of the chimney.

Exception: When venting only one appliance, two flues are permitted to adjoin each other in the same chimney with only the flue lining separation between them. The joints of the adjacent flue linings shall be staggered not less than 4 inches (102 mm).

2113.15 Flue area (appliance). Chimney flues shall not be smaller in area than the area of the connector from the appliance. Chimney flues connected to more than one appliance shall be not less than the area of the largest connector plus 50 percent of the areas of additional chimney connectors.

Exceptions:

1. Chimney flues serving oil-fired appliances sized in accordance with NFPA 31.
2. Chimney flues serving gas-fired appliances sized in accordance with the *International Fuel Gas Code*.

2113.16 Flue area (masonry fireplace). Flue sizing for chimneys serving fireplaces shall be in accordance with Section 2113.16.1 or 2113.16.2.

2113.16.1 Minimum area. Round chimney flues shall have a minimum net cross-sectional area of not less than $^1/_{12}$ of the fireplace opening. Square chimney flues shall have a minimum net cross-sectional area of not less than $^1/_{10}$ of the fireplace opening. Rectangular chimney flues with an aspect ratio less than 2 to 1 shall have a minimum net cross-sectional area of not less than $^1/_{10}$ of the fireplace opening. Rectangular chimney flues with an aspect ratio of 2 to 1 or more shall have a minimum net cross-sectional area of not less than $^1/_8$ of the fireplace opening.

2113.16.2 Determination of minimum area. The minimum net cross-sectional area of the flue shall be determined in accordance with Figure 2113.16. A flue size providing not less than the equivalent net cross-sectional area shall be used. Cross-sectional areas of clay flue linings are as provided in Tables 2113.16(1) and 2113.16(2)

or as provided by the manufacturer or as measured in the field. The height of the chimney shall be measured from the firebox floor to the top of the chimney flue.

2113.17 Inlet. Inlets to masonry chimneys shall enter from the side. Inlets shall have a thimble of fireclay, rigid refractory material or metal that will prevent the connector from pulling out of the inlet or from extending beyond the wall of the liner.

2113.18 Masonry chimney cleanout openings. Cleanout openings shall be provided within 6 inches (152 mm) of the base of each flue within every masonry chimney. The upper edge of the cleanout shall be located not less than 6 inches (152 mm) below the lowest chimney inlet opening. The height of the opening shall be not less than 6 inches (152 mm). The cleanout shall be provided with a noncombustible cover.

Exception: Chimney flues serving masonry fireplaces, where cleaning is possible through the fireplace opening.

2113.19 Chimney clearances. Any portion of a masonry chimney located in the interior of the building or within the *exterior wall* of the building shall have a minimum airspace clearance to combustibles of 2 inches (51 mm). Chimneys located entirely outside the *exterior walls* of the building, including chimneys that pass through the soffit or cornice, shall have a minimum airspace clearance of 1 inch (25 mm). The airspace shall not be filled, except to provide fireblocking in accordance with Section 2113.20.

Exceptions:

1. Masonry chimneys equipped with a chimney lining system *listed* and *labeled* for use in chimneys in contact with combustibles in accordance with UL 1777, and installed in accordance with the manufacturer's instructions, are permitted to have combustible material in contact with their exterior surfaces.
2. Where masonry chimneys are constructed as part of masonry or concrete walls, combustible materials shall not be in contact with the masonry or concrete wall less than 12 inches (305 mm) from the inside surface of the nearest flue lining.
3. Exposed combustible *trim* and the edges of sheathing materials, such as wood siding, are permitted to abut the masonry chimney sidewalls, in accordance with Figure 2113.19, provided such combustible *trim* or sheathing is not less than 12 inches (305 mm) from the inside surface of the nearest flue lining. Combustible material and *trim* shall not overlap the corners of the chimney by more than 1 inch (25 mm).

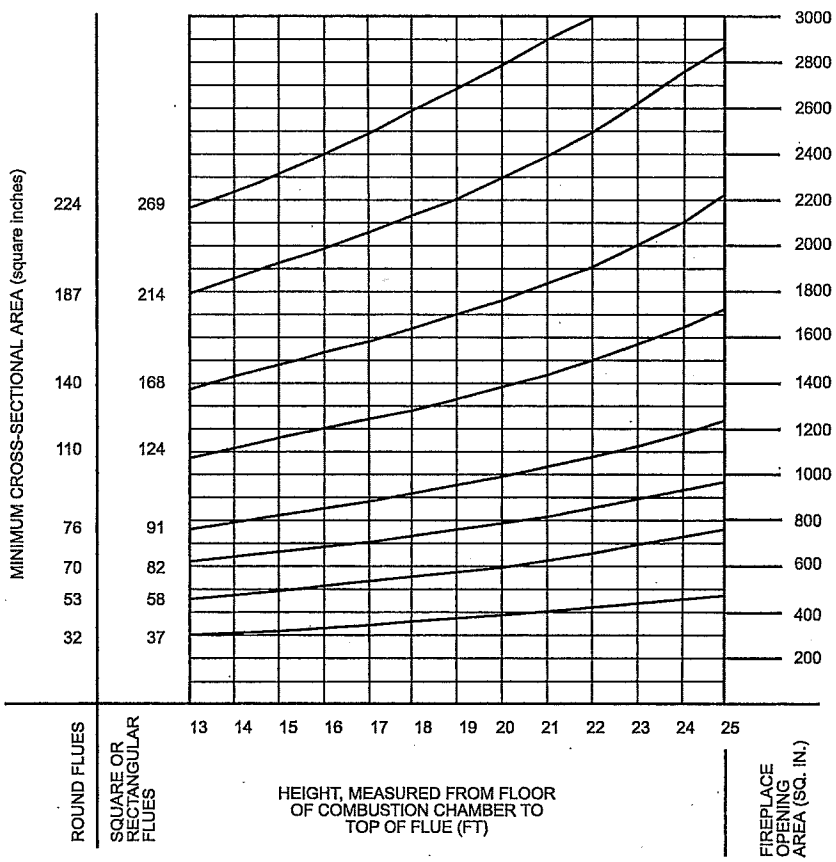

For SI: 1 inch = 25.4 mm, 1 square inch = 645 mm^2.

FIGURE 2113.16
FLUE SIZES FOR MASONRY CHIMNEYS

2052

TABLE 2113.16(1)
NET CROSS-SECTIONAL AREA OF ROUND FLUE SIZES[a]

FLUE SIZE, INSIDE DIAMETER (inches)	CROSS-SECTIONAL AREA (square inches)
6	28
7	38
8	50
10	78
$10^3/_4$	90
12	113
15	176
18	254

For SI: 1 inch = 25.4 mm, 1 square inch = 645.16 mm^2.
a. Flue sizes are based on ASTM C 315.

TABLE 2113.16(2)
NET CROSS-SECTIONAL AREA OF SQUARE AND RECTANGULAR FLUE SIZES

FLUE SIZE, OUTSIDE NOMINAL DIMENSIONS (inches)	CROSS-SECTIONAL AREA (square inches)
4.5 × 8.5	23
4.5 × 13	34
8 × 8	42
8.5 × 8.5	49
8 × 12	67
8.5 × 13	76
12 × 12	102
8.5 × 18	101
13 ×13	127
12 × 16	131
13 × 18	173
16 × 16	181
16 × 20	222
18 × 18	233
20 × 20	298
20 × 24	335
24 × 24	431

For SI: 1 inch = 25.4 mm, 1 square inch = 645.16 mm^2.

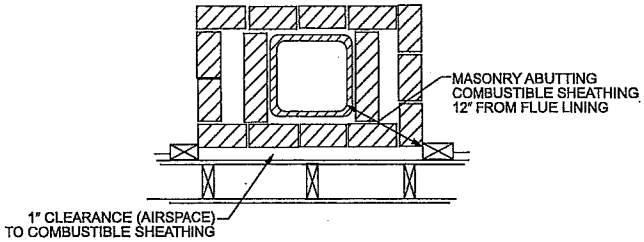

FIGURE 2113.19
ILLUSTRATION OF EXCEPTION THREE CHIMNEYCLEARANCE PROVISION

2113.20 Chimney fireblocking. All spaces between chimneys and floors and ceilings through which chimneys pass shall be fireblocked with noncombustible material securely fastened in place. The fireblocking of spaces between wood joists, beams or headers shall be self-supporting or be placed on strips of metal or metal lath laid across the spaces between combustible material and the chimney.

CHAPTER 22

STEEL

User note: Code change proposals to this chapter will be considered by the IBC – Structural Code Development Committee during the 2016 (Group B) Code Development Cycle. See explanation on page iv.

SECTION 2201
GENERAL

2201.1 Scope. The provisions of this chapter govern the quality, design, fabrication and erection of steel construction.

SECTION 2202
DEFINITIONS

2202.1 Definitions. The following terms are defined in Chapter 2:

STEEL CONSTRUCTION, COLD-FORMED.

STEEL JOIST.

STEEL ELEMENT, STRUCTURAL.

SECTION 2203
IDENTIFICATION AND PROTECTION OF STEEL FOR STRUCTURAL PURPOSES

2203.1 Identification. Identification of *structural steel elements* shall be in accordance with AISC 360. Identification of cold-formed steel members shall be in accordance with AISI S100. Identification of cold-formed steel light-frame construction shall also comply with the requirements contained in AISI S200 or AISI S220, as applicable. Other steel furnished for structural load-carrying purposes shall be properly identified for conformity to the ordered grade in accordance with the specified ASTM standard or other specification and the provisions of this chapter. Steel that is not readily identifiable as to grade from marking and test records shall be tested to determine conformity to such standards.

2203.2 Protection. Painting of *structural steel elements* shall be in accordance with AISC 360. Painting of open-web steel joists and joist girders shall be in accordance with SJI CJ, SJI JG, SJI K and SJI LH/DLH. Individual structural members and assembled panels of cold-formed steel construction shall be protected against corrosion in accordance with the requirements contained in AISI S100. Protection of cold-formed steel light-frame construction shall be in accordance with AISI S200 or AISI S220, as applicable.

SECTION 2204
CONNECTIONS

2204.1 Welding. The details of design, workmanship and technique for welding and qualification of welding personnel shall be in accordance with the specifications listed in Sections 2205, 2206, 2207, 2208, 2210 and 2211. For *special inspection* of welding, see Section 1705.2.

2204.2 Bolting. The design, installation and inspection of bolts shall be in accordance with the requirements of Sections 2205, 2206, 2207, 2210 and 2211. For *special inspection* of the installation of high-strength bolts, see Section 1705.2.

2204.3 Anchor rods. Anchor rods shall be set in accordance with the *approved construction documents*. The protrusion of the threaded ends through the connected material shall fully engage the threads of the nuts but shall not be greater than the length of the threads on the bolts.

SECTION 2205
STRUCTURAL STEEL

2205.1 General. The design, fabrication and erection of *structural steel elements* in buildings, structures and portions thereof shall be in accordance with AISC 360.

2205.2 Seismic design. Where required, the seismic design, fabrication and erection of buildings, structures and portions thereof shall be in accordance with Section 2205.2.1 or 2205.2.2, as applicable.

2205.2.1 Structural steel seismic force-resisting systems. The design, detailing, fabrication and erection of structural steel seismic force-resisting systems shall be in accordance with the provisions of Section 2205.2.1.1 or 2205.2.1.2, as applicable.

2205.2.1.1 Seismic Design Category B or C. Structures assigned to *Seismic Design Category* B or C shall be of any construction permitted in Section 2205. Where a response modification coefficient, R, in accordance with ASCE 7, Table 12.2-1, is used for the design of structures assigned to *Seismic Design Category* B or C, the structures shall be designed and detailed in accordance with the requirements of AISC 341.

Exception: The response modification coefficient, R, designated for "Steel systems not specifically detailed for seismic resistance, excluding cantilever column systems" in ASCE 7, Table 12.2-1, shall be permitted for systems designed and detailed in accordance with AISC 360, and need not be designed and detailed in accordance with AISC 341.

2205.2.1.2 Seismic Design Category D, E or F. Structures assigned to *Seismic Design Category* D, E or F shall be designed and detailed in accordance with AISC 341, except as permitted in ASCE 7, Table 15.4-1.

2205.2.2 Structural steel elements. The design, detailing, fabrication and erection of *structural steel elements* in seismic force-resisting systems other than those covered in

Section 2205.2.1, including struts, collectors, chords and foundation elements, shall be in accordance with AISC 341 where either of the following applies:

1. The structure is assigned to *Seismic Design Category* D, E or F, except as permitted in ASCE 7, Table 15.4-1.
2. A response modification coefficient, *R*, greater than 3 in accordance with ASCE 7, Table 12.2-1, is used for the design of the structure assigned to *Seismic Design Category* B or C.

SECTION 2206
COMPOSITE STRUCTURAL STEEL AND CONCRETE STRUCTURES

2206.1 General. Systems of *structural steel elements* acting compositely with reinforced concrete shall be designed in accordance with AISC 360 and ACI 318, excluding ACI 318 Chapter 14.

2206.2 Seismic design. Where required, the seismic design, fabrication and erection of composite steel and concrete systems shall be in accordance with Section 2206.2.1.

2206.2.1 Seismic requirements for composite structural steel and concrete construction. Where a response modification coefficient, *R*, in accordance with ASCE 7, Table 12.2-1, is used for the design of systems of structural steel acting compositely with reinforced concrete, the structures shall be designed and detailed in accordance with the requirements of AISC 341.

SECTION 2207
STEEL JOISTS

2207.1 General. The design, manufacture and use of open-web steel joists and joist girders shall be in accordance with one of the following Steel Joist Institute (SJI) specifications:

1. SJI CJ
2. SJI K
3. SJI LH/DLH
4. SJI JG

2207.1.1 Seismic design. Where required, the seismic design of buildings shall be in accordance with the additional provisions of Section 2205.2 or 2211.6.

2207.2 Design. The *registered design professional* shall indicate on the *construction documents* the steel joist and steel joist girder designations from the specifications listed in Section 2207.1; and shall indicate the requirements for joist and joist girder design, layout, end supports, anchorage, bridging design that differs from the SJI specifications listed in Section 2207.1, bridging termination connections and bearing connection design to resist uplift and lateral loads. These documents shall indicate special requirements as follows:

1. Special loads including:
   - 1.1. Concentrated loads.
   - 1.2. Nonuniform loads.
   - 1.3. Net uplift loads.
   - 1.4. Axial loads.
   - 1.5. End moments.
   - 1.6. Connection forces.
2. Special considerations including:
   - 2.1. Profiles for joist and joist girder configurations that differ from those defined by the SJI specifications listed in Section 2207.1.
   - 2.2. Oversized or other nonstandard web openings.
   - 2.3. Extended ends.
3. Live and total load deflection criteria for joists and joist girder configurations that differ from those defined by the SJI specifications listed in Section 2207.1.

2207.3 Calculations. The steel joist and joist girder manufacturer shall design the steel joists and steel joist girders in accordance with the SJI specifications listed in Section 2207.1 to support the load requirements of Section 2207.2. The *registered design professional* shall be permitted to require submission of the steel joist and joist girder calculations as prepared by a *registered design professional* responsible for the product design. Where requested by the *registered design professional*, the steel joist manufacturer shall submit design calculations with a cover letter bearing the seal and signature of the joist manufacturer's *registered design professional*. In addition to the design calculations submitted under seal and signature, the following shall be included:

1. Bridging design that differs from the SJI specifications listed in Section 2207.1, such as cantilevered conditions and net uplift.
2. Connection design for:
   - 2.1. Connections that differ from the SJI specifications listed in Section 2207.1, such as flush-framed or framed connections.
   - 2.2. Field splices.
   - 2.3. Joist headers.

2207.4 Steel joist drawings. Steel joist placement plans shall be provided to show the steel joist products as specified on the *approved construction documents* and are to be utilized for field installation in accordance with specific project requirements as stated in Section 2207.2. Steel joist placement plans shall include, at a minimum, the following:

1. Listing of applicable loads as stated in Section 2207.2 and used in the design of the steel joists and joist girders as specified in the *approved construction documents*.
2. Profiles for joist and joist girder configurations that differ from those defined by the SJI specifications listed in Section 2207.1.
3. Connection requirements for:
   - 3.1. Joist supports.
   - 3.2. Joist girder supports.
   - 3.3. Field splices.

3.4. Bridging attachments.

4. Live and total load deflection criteria for joists and joist girder configurations that differ from those defined by the SJI specifications listed in Section 2207.1.
5. Size, location and connections for bridging.
6. Joist headers.

Steel joist placement plans do not require the seal and signature of the joist manufacturer's *registered design professional*.

2207.5 Certification. At completion of manufacture, the steel joist manufacturer shall submit a *certificate of compliance* to the owner or the owner's authorized agent for submittal to the *building official* as specified in Section 1704.5 stating that work was performed in accordance with *approved construction documents* and with SJI specifications listed in Section 2207.1.

SECTION 2208
STEEL CABLE STRUCTURES

2208.1 General. The design, fabrication and erection including related connections, and protective coatings of steel cables for buildings shall be in accordance with ASCE 19.

2208.2 Seismic requirements for steel cable. The design strength of steel cables shall be determined by the provisions of ASCE 19 except as modified by these provisions.

1. A load factor of 1.1 shall be applied to the prestress force included in T_3 and T_4 as defined in Section 3.12.
2. In Section 3.2.1, Item (c) shall be replaced with "1.5 T_3" and Item (d) shall be replaced with "1.5 T_4."

SECTION 2209
STEEL STORAGE RACKS

2209.1 Storage racks. The design, testing and utilization of *storage racks* made of cold-formed or hot-rolled steel structural members shall be in accordance with RMI/ANSI MH 16.1. Where required by ASCE 7, the seismic design of *storage racks* shall be in accordance with Section 15.5.3 of ASCE 7.

SECTION 2210
COLD-FORMED STEEL

2210.1 General. The design of cold-formed carbon and low-alloy steel structural members shall be in accordance with AISI S100. The design of cold-formed stainless-steel structural members shall be in accordance with ASCE 8. Cold-formed steel light-frame construction shall also comply with Section 2211. Where required, the seismic design of cold-formed steel structures shall be in accordance with the additional provisions of Section 2210.2.

2210.1.1 Steel decks. The design and construction of cold-formed steel decks shall be in accordance with this section.

2210.1.1.1 Noncomposite steel floor decks. Noncomposite steel floor decks shall be permitted to be designed and constructed in accordance with ANSI/SDI-NC1.0.

2210.1.1.2 Steel roof deck. Steel roof decks shall be permitted to be designed and constructed in accordance with ANSI/SDI-RD1.0.

2210.1.1.3 Composite slabs on steel decks. Composite slabs of concrete and steel deck shall be permitted to be designed and constructed in accordance with SDI-C.

2210.2 Seismic requirements for cold-formed steel structures. Where a response modification coefficient, R, in accordance with ASCE 7, Table 12.2-1, is used for the design of cold-formed steel structures, the structures shall be designed and detailed in accordance with the requirements of AISI S100, ASCE 8, or, for cold-formed steel special-bolted moment frames, AISI S110.

SECTION 2211
COLD-FORMED STEEL LIGHT-FRAME CONSTRUCTION

2211.1 General. The design and installation of structural and nonstructural members utilized in cold-formed steel light-frame construction where the specified minimum base steel thickness is not greater than 0.1180 inches (2.997 mm) shall be in accordance with AISI S200 and Sections 2211.2 through 2211.7, or AISI S220, as applicable.

2211.2 Header design. Headers, including box and back-to-back headers, and double and single L-headers shall be designed in accordance with AISI S212 or AISI S100.

2211.3 Truss design. Cold-formed steel trusses shall be designed in accordance with AISI S214, Sections 2211.3.1 through 2211.3.4 and accepted engineering practice.

2211.3.1 Truss design drawings. The truss design drawings shall conform to the requirements of Section B2.3 of AISI S214 and shall be provided with the shipment of trusses delivered to the job site. The truss design drawings shall include the details of permanent individual truss member restraint/bracing in accordance with Section B6(a) or B 6(c) of AISI S214 where these methods are utilized to provide restraint/bracing.

2211.3.2 Deferred submittals. AISI S214 Section B4.2 shall be deleted.

2211.3.3 Trusses spanning 60 feet or greater. The owner or the owner's authorized agent shall contract with a *registered design professional* for the design of the temporary installation restraint/bracing and the permanent individual truss member restraint/bracing for trusses with clear spans 60 feet (18 288 mm) or greater. *Special inspection* of trusses over 60 feet (18 288 mm) in length shall be in accordance with Section 1705.2.

2211.3.4 Truss quality assurance. Trusses not part of a manufacturing process that provides requirements for quality control done under the supervision of a third-party quality control agency, shall be manufactured in compliance with Sections 1704.2.5 and 1705.2, as applicable.

2211.4 Structural wall stud design. Structural wall studs shall be designed in accordance with either AISI S211 or AISI S100.

2211.5 Floor and roof system design. Framing for floor and roof systems in buildings shall be designed in accordance with either AISI S210 or AISI S100.

2211.6 Lateral design. Light-frame shear walls, diagonal strap bracing that is part of a structural wall and diaphragms used to resist wind, seismic and other in-plane lateral loads shall be designed in accordance with AISI S213.

2211.7 Prescriptive framing. Detached one- and two-family *dwellings* and *townhouses*, less than or equal to three *stories above grade plane*, shall be permitted to be constructed in accordance with AISI S230 subject to the limitations therein.

CHAPTER 23

WOOD

User note: Code change proposals to this chapter will be considered by the IBC – Structural Code Development Committee during the 2016 (Group B) Code Development Cycle. See explanation on page iv.

SECTION 2301
GENERAL

2301.1 Scope. The provisions of this chapter shall govern the materials, design, construction and quality of wood members and their fasteners.

2301.2 General design requirements. The design of structural elements or systems, constructed partially or wholly of wood or wood-based products, shall be in accordance with one of the following methods:

1. *Allowable stress design* in accordance with Sections 2304, 2305 and 2306.
2. *Load and resistance factor design* in accordance with Sections 2304, 2305 and 2307.
3. *Conventional light-frame construction* in accordance with Sections 2304 and 2308.
4. AWC WFCM in accordance with Section 2309.
5. The design and construction of log structures in accordance with the provisions of ICC 400.

2301.3 Nominal sizes. For the purposes of this chapter, where dimensions of lumber are specified, they shall be deemed to be nominal dimensions unless specifically designated as actual dimensions (see Section 2304.2).

SECTION 2302
DEFINITIONS

2302.1 Definitions. The following terms are defined in Chapter 2:

ACCREDITATION BODY.

BRACED WALL LINE.

BRACED WALL PANEL.

COLLECTOR.

CONVENTIONAL LIGHT-FRAME CONSTRUCTION.

CRIPPLE WALL.

CROSS-LAMINATED TIMBER.

DIAPHRAGM, UNBLOCKED.

DRAG STRUT.

ENGINEERED WOOD RIM BOARD.

FIBERBOARD.

GABLE.

GRADE (LUMBER).

HARDBOARD.

NAILING, BOUNDARY.

NAILING, EDGE.

NAILING, FIELD.

NOMINAL SIZE (LUMBER).

PARTICLEBOARD.

PERFORMANCE CATEGORY.

PREFABRICATED WOOD I-JOIST.

SHEAR WALL.

- **Shear wall, perforated.**
- **Shear wall segment, perforated.**

STRUCTURAL COMPOSITE LUMBER.

- **Laminated strand lumber (LSL).**
- **Laminated veneer lumber (LVL).**
- **Oriented strand lumber (OSL).**
- **Parallel strand lumber (PSL).**

STRUCTURAL GLUED-LAMINATED TIMBER.

TIE-DOWN (HOLD-DOWN).

TREATED WOOD.

- **Fire-retardant-treated wood.**
- **Preservative-treated wood.**

WOOD SHEAR PANEL.

WOOD STRUCTURAL PANEL.

- **Composite panels.**
- **Oriented strand board (OSB).**
- **Plywood.**

SECTION 2303
MINIMUM STANDARDS AND QUALITY

2303.1 General. Structural sawn lumber; end-jointed lumber; prefabricated wood I-joists; structural glued-laminated timber; wood structural panels; fiberboard sheathing (when used structurally); hardboard siding (when used structurally); particleboard; *preservative-treated wood*; structural log members; structural composite lumber; round timber poles and piles; *fire-retardant-treated wood*; hardwood plywood; wood trusses; joist hangers; nails; and staples shall conform to the applicable provisions of this section.

2303.1.1 Sawn lumber. Sawn lumber used for load-supporting purposes, including end-jointed or edge-glued lumber, machine stress-rated or machine-evaluated lum-

ber, shall be identified by the grade *mark* of a lumber grading or inspection agency that has been approved by an accreditation body that complies with DOC PS 20 or equivalent. Grading practices and identification shall comply with rules published by an agency approved in accordance with the procedures of DOC PS 20 or equivalent procedures.

2303.1.1.1 Certificate of inspection. In lieu of a grade *mark* on the material, a certificate of inspection as to species and grade issued by a lumber grading or inspection agency meeting the requirements of this section is permitted to be accepted for precut, remanufactured or rough-sawn lumber and for sizes larger than 3 inches (76 mm) nominal thickness.

2303.1.1.2 End-jointed lumber. *Approved* end-jointed lumber is permitted to be used interchangeably with solid-sawn members of the same species and grade. End-jointed lumber used in an assembly required to have a fire-resistance rating shall have the designation "Heat Resistant Adhesive" or "HRA" included in its grade mark.

2303.1.2 Prefabricated wood I-joists. Structural capacities and design provisions for prefabricated wood I-joists shall be established and monitored in accordance with ASTM D 5055.

2303.1.3 Structural glued-laminated timber. Glued-laminated timbers shall be manufactured and identified as required in ANSI/AITC A 190.1 and ASTM D 3737.

2303.1.4 Structural glued cross-laminated timber. Cross-laminated timbers shall be manufactured and identified in accordance with ANSI/APA PRG 320.

2303.1.5 Wood structural panels. Wood structural panels, when used structurally (including those used for siding, roof and wall sheathing, subflooring, diaphragms and built-up members), shall conform to the requirements for their type in DOC PS 1, DOC PS 2 or ANSI/APA PRP 210. Each panel or member shall be identified for grade, bond classification, and Performance Category by the trademarks of an *approved* testing and grading agency. The Performance Category value shall be used as the "nominal panel thickness" or "panel thickness" whenever referenced in this code. Wood structural panel components shall be designed and fabricated in accordance with the applicable standards listed in Section 2306.1 and identified by the trademarks of an *approved* testing and inspection agency indicating conformance to the applicable standard. In addition, wood structural panels when permanently exposed in outdoor applications shall be of Exterior type, except that wood structural panel roof sheathing exposed to the outdoors on the underside is permitted to be Exposure 1 type.

2303.1.6 Fiberboard. Fiberboard for its various uses shall conform to ASTM C 208. Fiberboard sheathing, when used structurally, shall be identified by an *approved* agency as conforming to ASTM C 208.

2303.1.6.1 Jointing. To ensure tight-fitting assemblies, edges shall be manufactured with square, shiplapped, beveled, tongue-and-groove or U-shaped joints.

2303.1.6.2 Roof insulation. Where used as roof insulation in all types of construction, fiberboard shall be protected with an *approved* roof covering.

2303.1.6.3 Wall insulation. Where installed and fire-blocked to comply with Chapter 7, fiberboards are permitted as wall insulation in all types of construction. In fire walls and fire barriers, unless treated to comply with Section 803.1 for Class A materials, the boards shall be cemented directly to the concrete, masonry or other noncombustible base and shall be protected with an *approved* noncombustible veneer anchored to the base without intervening airspaces.

2303.1.6.3.1 Protection. Fiberboard wall insulation applied on the exterior of foundation walls shall be protected below ground level with a bituminous coating.

2303.1.7 Hardboard. Hardboard siding used structurally shall be identified by an *approved agency* conforming to CPA/ANSI A135.6. Hardboard underlayment shall meet the strength requirements of $^{7}/_{32}$-inch (5.6 mm) or $^{1}/_{4}$-inch (6.4 mm) service class hardboard planed or sanded on one side to a uniform thickness of not less than 0.200 inch (5.1 mm). Prefinished hardboard paneling shall meet the requirements of CPA/ANSI A135.5. Other basic hardboard products shall meet the requirements of CPA/ANSI A135.4. Hardboard products shall be installed in accordance with manufacturer's recommendations.

2303.1.8 Particleboard. Particleboard shall conform to ANSI A208.1. Particleboard shall be identified by the grade *mark* or certificate of inspection issued by an *approved agency*. Particleboard shall not be utilized for applications other than indicated in this section unless the particleboard complies with the provisions of Section 2306.3.

2303.1.8.1 Floor underlayment. Particleboard floor underlayment shall conform to Type PBU of ANSI A208.1. Type PBU underlayment shall not be less than $^{1}/_{4}$-inch (6.4 mm) thick and shall be installed in accordance with the instructions of the Composite Panel Association.

2303.1.9 Preservative-treated wood. Lumber, timber, plywood, piles and poles supporting permanent structures required by Section 2304.12 to be preservative treated shall conform to the requirements of the applicable AWPA Standard U1 and M4 for the species, product, preservative and end use. Preservatives shall be listed in Section 4 of AWPA U1. Lumber and plywood used in wood foundation systems shall conform to Chapter 18.

2303.1.9.1 Identification. Wood required by Section 2304.12 to be preservative treated shall bear the quality *mark* of an inspection agency that maintains continuing supervision, testing and inspection over the quality of the *preservative-treated wood*. Inspection agencies for *preservative-treated wood* shall be *listed* by an accredi-

tation body that complies with the requirements of the American Lumber Standards Treated Wood Program, or equivalent. The quality *mark* shall be on a stamp or *label* affixed to the *preservative-treated wood*, and shall include the following information:

1. Identification of treating manufacturer.
2. Type of preservative used.
3. Minimum preservative retention (pcf).
4. End use for which the product is treated.
5. AWPA standard to which the product was treated.
6. Identity of the accredited inspection agency.

2303.1.9.2 Moisture content. Where *preservative-treated wood* is used in enclosed locations where drying in service cannot readily occur, such wood shall be at a moisture content of 19 percent or less before being covered with insulation, interior wall finish, floor covering or other materials.

2303.1.10 Structural composite lumber. Structural capacities for structural composite lumber shall be established and monitored in accordance with ASTM D 5456.

2303.1.11 Structural log members. Stress grading of structural log members of nonrectangular shape, as typically used in log buildings, shall be in accordance with ASTM D 3957. Such structural log members shall be identified by the grade *mark* of an *approved* lumber grading or inspection agency. In lieu of a grade *mark* on the material, a certificate of inspection as to species and grade issued by a lumber grading or inspection agency meeting the requirements of this section shall be permitted.

2303.1.12 Round timber poles and piles. Round timber poles and piles shall comply with ASTM D 3200 and ASTM D 25, respectively.

2303.1.13 Engineered wood rim board. Engineered wood rim boards shall conform to ANSI/APA PRR 410 or shall be evaluated in accordance with ASTM D 7672. Structural capacities shall be in accordance with ANSI/APA PRR 410 or established in accordance with ASTM D 7672. Rim boards conforming to ANSI/APA PRR 410 shall be marked in accordance with that standard.

2303.2 Fire-retardant-treated wood. *Fire-retardant-treated wood* is any wood product which, when impregnated with chemicals by a pressure process or other means during manufacture, shall have, when tested in accordance with ASTM E 84 or UL 723, a *listed* flame spread index of 25 or less and show no evidence of significant progressive combustion when the test is continued for an additional 20-minute period. Additionally, the flame front shall not progress more than $10^1/_2$ feet (3200 mm) beyond the centerline of the burners at any time during the test.

2303.2.1 Pressure process. For wood products impregnated with chemicals by a pressure process, the process shall be performed in closed vessels under pressures not less than 50 pounds per square inch gauge (psig) (345 kPa).

2303.2.2 Other means during manufacture. For wood products produced by other means during manufacture, the treatment shall be an integral part of the manufacturing process of the wood product. The treatment shall provide permanent protection to all surfaces of the wood product.

2303.2.3 Testing. For wood products produced by other means during manufacture, other than a pressure process, all sides of the wood product shall be tested in accordance with and produce the results required in Section 2303.2. Wood structural panels shall be permitted to test only the front and back faces.

2303.2.4 Labeling. Fire-retardant-treated lumber and wood structural panels shall be labeled. The *label* shall contain the following items:

1. The identification *mark* of an *approved agency* in accordance with Section 1703.5.
2. Identification of the treating manufacturer.
3. The name of the fire-retardant treatment.
4. The species of wood treated.
5. Flame spread and smoke-developed index.
6. Method of drying after treatment.
7. Conformance with appropriate standards in accordance with Sections 2303.2.5 through 2303.2.8.
8. For *fire-retardant-treated wood* exposed to weather, damp or wet locations, include the words "No increase in the *listed* classification when subjected to the Standard Rain Test" (ASTM D 2898).

2303.2.5 Strength adjustments. Design values for untreated lumber and wood structural panels, as specified in Section 2303.1, shall be adjusted for *fire-retardant-treated wood*. Adjustments to design values shall be based on an *approved* method of investigation that takes into consideration the effects of the anticipated temperature and humidity to which the *fire-retardant-treated wood* will be subjected, the type of treatment and redrying procedures.

2303.2.5.1 Wood structural panels. The effect of treatment and the method of redrying after treatment, and exposure to high temperatures and high humidities on the flexure properties of fire-retardant-treated softwood plywood shall be determined in accordance with ASTM D 5516. The test data developed by ASTM D 5516 shall be used to develop adjustment factors, maximum loads and spans, or both, for untreated plywood design values in accordance with ASTM D 6305. Each manufacturer shall publish the allowable maximum loads and spans for service as floor and roof sheathing for its treatment.

2303.2.5.2 Lumber. For each species of wood that is treated, the effects of the treatment, the method of redrying after treatment and exposure to high temperatures and high humidities on the allowable design properties of fire-retardant-treated lumber shall be determined in accordance with ASTM D 5664. The test data developed by ASTM D 5664 shall be used to develop modification factors for use at or near room

temperature and at elevated temperatures and humidity in accordance with ASTM D 6841. Each manufacturer shall publish the modification factors for service at temperatures of not less than 80°F (27°C) and for roof framing. The roof framing modification factors shall take into consideration the climatological location.

2303.2.6 Exposure to weather, damp or wet locations. Where *fire-retardant-treated wood* is exposed to weather, or damp or wet locations, it shall be identified as "Exterior" to indicate there is no increase in the *listed* flame spread index as defined in Section 2303.2 when subjected to ASTM D 2898.

2303.2.7 Interior applications. Interior *fire-retardant-treated wood* shall have moisture content of not over 28 percent when tested in accordance with ASTM D 3201 procedures at 92-percent relative humidity. Interior *fire-retardant-treated wood* shall be tested in accordance with Section 2303.2.5.1 or 2303.2.5.2. Interior *fire-retardant-treated wood* designated as Type A shall be tested in accordance with the provisions of this section.

2303.2.8 Moisture content. *Fire-retardant-treated wood* shall be dried to a moisture content of 19 percent or less for lumber and 15 percent or less for wood structural panels before use. For wood kiln-dried after treatment (KDAT), the kiln temperatures shall not exceed those used in kiln drying the lumber and plywood submitted for the tests described in Section 2303.2.5.1 for plywood and 2303.2.5.2 for lumber.

2303.2.9 Type I and II construction applications. See Section 603.1 for limitations on the use of *fire-retardant-treated wood* in buildings of Type I or II construction.

2303.3 Hardwood and plywood. Hardwood and decorative plywood shall be manufactured and identified as required in HPVA HP-1.

2303.4 Trusses. Wood trusses shall comply with Sections 2303.4.1 through 2303.4.7.

2303.4.1 Design. Wood trusses shall be designed in accordance with the provisions of this code and accepted engineering practice. Members are permitted to be joined by nails, glue, bolts, timber connectors, metal connector plates or other *approved* framing devices.

2303.4.1.1 Truss design drawings. The written, graphic and pictorial depiction of each individual truss shall be provided to the *building official* for approval prior to installation. Truss design drawings shall also be provided with the shipment of trusses delivered to the job site. Truss design drawings shall include, at a minimum, the information specified below:

1. Slope or depth, span and spacing;
2. Location of all joints and support locations;
3. Number of plies if greater than one;
4. Required bearing widths;
5. Design loads as applicable, including;
   - 5.1. Top chord live load;
   - 5.2. Top chord dead load;
   - 5.3. Bottom chord live load;
   - 5.4. Bottom chord dead load;
   - 5.5. Additional loads and locations; and
   - 5.6. Environmental design criteria and loads (wind, rain, snow, seismic, etc.).
6. Other lateral loads, including drag strut loads;
7. Adjustments to wood member and metal connector plate design value for conditions of use;
8. Maximum reaction force and direction, including maximum uplift reaction forces where applicable;
9. Metal-connector-plate type, size and thickness or gage, and the dimensioned location of each metal connector plate except where symmetrically located relative to the joint interface;
10. Size, species and grade for each wood member;
11. Truss-to-truss connections and truss field assembly requirements;
12. Calculated span-to-deflection ratio and maximum vertical and horizontal deflection for live and total load as applicable;
13. Maximum axial tension and compression forces in the truss members;
14. Required permanent individual truss member restraint location and the method and details of restraint/bracing to be used in accordance with Section 2303.4.1.2.

2303.4.1.2 Permanent individual truss member restraint. Where permanent restraint of truss members is required on the truss design drawings, it shall be accomplished by one of the following methods:

1. Permanent individual truss member restraint/bracing shall be installed using standard industry lateral restraint/bracing details in accordance with generally accepted engineering practice. Locations for lateral restraint shall be identified on the truss design drawing.
2. The trusses shall be designed so that the buckling of any individual truss member is resisted internally by the individual truss through suitable means (i.e., buckling reinforcement by T-reinforcement or L-reinforcement, proprietary reinforcement, etc.). The buckling reinforcement of individual members of the trusses shall be installed as shown on the truss design drawing or on supplemental truss member buckling reinforcement details provided by the truss designer.
3. A project-specific permanent individual truss member restraint/bracing design shall be permitted to be specified by any *registered design professional.*

2303.4.1.3 Trusses spanning 60 feet or greater. The owner or the owner's authorized agent shall contract with any qualified *registered design professional* for

the design of the temporary installation restraint/bracing and the permanent individual truss member restraint/bracing for all trusses with clear spans 60 feet (18 288 mm) or greater.

2303.4.1.4 Truss designer. The individual or organization responsible for the design of trusses.

2303.4.1.4.1 Truss design drawings. Where required by the *registered design professional*, the *building official* or the statutes of the jurisdiction in which the project is to be constructed, each individual truss design drawing shall bear the seal and signature of the truss designer.

Exceptions:

1. Where a cover sheet and truss index sheet are combined into a single sheet and attached to the set of truss design drawings, the single cover/truss index sheet is the only document required to be signed and sealed by the truss designer.
2. When a cover sheet and a truss index sheet are separately provided and attached to the set of truss design drawings, the cover sheet and the truss index sheet are the only documents required to be signed and sealed by the truss designer.

2303.4.2 Truss placement diagram. The truss manufacturer shall provide a truss placement diagram that identifies the proposed location for each individually designated truss and references the corresponding truss design drawing. The truss placement diagram shall be provided as part of the truss submittal package, and with the shipment of trusses delivered to the job site. Truss placement diagrams that serve only as a guide for installation and do not deviate from the *permit* submittal drawings shall not be required to bear the seal or signature of the truss designer.

2303.4.3 Truss submittal package. The truss submittal package provided by the truss manufacturer shall consist of each individual truss design drawing, the truss placement diagram, the permanent individual truss member restraint/bracing method and details and any other structural details germane to the trusses; and, as applicable, the cover/truss index sheet.

2303.4.4 Anchorage. The design for the transfer of loads and anchorage of each truss to the supporting structure is the responsibility of the *registered design professional.*

2303.4.5 Alterations to trusses. Truss members and components shall not be cut, notched, drilled, spliced or otherwise altered in any way without written concurrence and approval of a *registered design professional.* Alterations resulting in the addition of loads to any member (e.g., HVAC equipment, piping, additional roofing or insulation, etc.) shall not be permitted without verification that the truss is capable of supporting such additional loading.

2303.4.6 TPI 1 specifications. In addition to Sections 2303.4.1 through 2303.4.5, the design, manufacture and quality assurance of metal-plate-connected wood trusses shall be in accordance with TPI 1. Job-site inspections shall be in compliance with Section 110.4, as applicable.

2303.4.7 Truss quality assurance. Trusses not part of a manufacturing process in accordance with either Section 2303.4.6 or a referenced standard, which provides requirements for quality control done under the supervision of a third-party quality control agency, shall be manufactured in compliance with Sections 1704.2.5 and 1705.5, as applicable.

2303.5 Test standard for joist hangers. Joist hangers shall be in accordance with ASTM D 7147.

2303.6 Nails and staples. Nails and staples shall conform to requirements of ASTM F 1667. Nails used for framing and sheathing connections shall have minimum average bending yield strengths as follows: 80 kips per square inch (ksi) (551 MPa) for shank diameters larger than 0.177 inch (4.50 mm) but not larger than 0.254 inch (6.45 mm), 90 ksi (620 MPa) for shank diameters larger than 0.142 inch (3.61 mm) but not larger than 0.177 inch (4.50 mm) and 100 ksi (689 MPa) for shank diameters of at least 0.099 inch (2.51 mm) but not larger than 0.142 inch (3.61 mm).

2303.7 Shrinkage. Consideration shall be given in design to the possible effect of cross-grain dimensional changes considered vertically which may occur in lumber fabricated in a green condition.

SECTION 2304
GENERAL CONSTRUCTION REQUIREMENTS

2304.1 General. The provisions of this section apply to design methods specified in Section 2301.2.

2304.2 Size of structural members. Computations to determine the required sizes of members shall be based on the net dimensions (actual sizes) and not nominal sizes.

2304.3 Wall framing. The framing of exterior and interior walls shall be in accordance with the provisions specified in Section 2308 unless a specific design is furnished.

2304.3.1 Bottom plates. Studs shall have full bearing on a 2-inch-thick (actual $1^1/_2$-inch, 38 mm) or larger plate or sill having a width at least equal to the width of the studs.

2304.3.2 Framing over openings. Headers, double joists, trusses or other *approved* assemblies that are of adequate size to transfer loads to the vertical members shall be provided over window and door openings in load-bearing walls and partitions.

2304.3.3 Shrinkage. Wood walls and bearing partitions shall not support more than two floors and a roof unless an analysis satisfactory to the *building official* shows that shrinkage of the wood framing will not have adverse effects on the structure or any plumbing, electrical or mechanical systems or other equipment installed therein due to excessive shrinkage or differential movements caused by shrinkage. The analysis shall also show that the roof drainage system and the foregoing systems or equipment will not be adversely affected or, as an alternate, such systems shall be designed to accommodate the differential shrinkage or movements.

2304.4 Floor and roof framing. The framing of wood-joisted floors and wood-framed roofs shall be in accordance with the provisions specified in Section 2308 unless a specific design is furnished.

2304.5 Framing around flues and chimneys. Combustible framing shall be a minimum of 2 inches (51 mm), but shall not be less than the distance specified in Sections 2111 and 2113 and the *International Mechanical Code*, from flues, chimneys and fireplaces, and 6 inches (152 mm) away from flue openings.

2304.6 Exterior wall sheathing. Wall sheathing on the outside of exterior walls, including gables, and the connection of the sheathing to framing shall be designed in accordance with the general provisions of this code and shall be capable of resisting wind pressures in accordance with Section 1609.

* **2304.6.1 Wood structural panel sheathing.** Where wood structural panel sheathing is used as the exposed finish on the outside of exterior walls, it shall have an exterior exposure durability classification. Where wood structural panel sheathing is used elsewhere, but not as the exposed finish, it shall be of a type manufactured with exterior glue (Exposure 1 or Exterior). Wood structural panel sheathing, connections and framing spacing shall be in accordance with Table 2304.6.1 for the applicable wind speed and exposure category where used in enclosed buildings with a mean roof height not greater than 30 feet (9144 mm) and a topographic factor (K_{zt}) of 1.0.

2304.7 Interior paneling. Softwood wood structural panels used for interior paneling shall conform to the provisions of Chapter 8 and shall be installed in accordance with Table 2304.10.1. Panels shall comply with DOC PS 1, DOC PS 2 or ANSI/APA PRP 210. Prefinished hardboard paneling shall meet the requirements of CPA/ANSI A135.5. Hardwood plywood shall conform to HPVA HP-1.

2304.8 Floor and roof sheathing. Structural floor sheathing and structural roof sheathing shall comply with Sections 2304.8.1 and 2304.8.2, respectively.

2304.8.1 Structural floor sheathing. Structural floor sheathing shall be designed in accordance with the general provisions of this code and the special provisions in this section.

Floor sheathing conforming to the provisions of Table 2304.8(1), 2304.8(2), 2304.8(3) or 2304.8(4) shall be deemed to meet the requirements of this section.

2304.8.2 Structural roof sheathing. Structural roof sheathing shall be designed in accordance with the general provisions of this code and the special provisions in this section.

Roof sheathing conforming to the provisions of Table 2304.8(1), 2304.8(2), 2304.8(3) or 2304.8(5) shall be deemed to meet the requirements of this section. Wood structural panel roof sheathing shall be bonded by exterior glue.

2304.9 Lumber decking. Lumber decking shall be designed and installed in accordance with the general provisions of this code and Sections 2304.9.1 through 2304.9.5.3.

2304.9.1 General. Each piece of lumber decking shall be square-end trimmed. When random lengths are furnished, each piece shall be square end trimmed across the face so that at least 90 percent of the pieces are within 0.5 degrees (0.00873 rad) of square. The ends of the pieces shall be permitted to be beveled up to 2 degrees (0.0349 rad) from the vertical with the exposed face of the piece slightly longer than the opposite face of the piece. Tongue-and-groove decking shall be installed with the tongues up on sloped or pitched roofs with pattern faces down.

TABLE 2304.6.1
MAXIMUM NOMINAL DESIGN WIND SPEED, V_{asd} PERMITTED FOR WOOD STRUCTURAL PANEL WALL SHEATHING USED TO RESIST WIND PRESSURES[a, b, c]

MINIMUM NAIL		MINIMUM WOOD STRUCTURAL PANEL SPAN RATING	MINIMUM NOMINAL PANEL THICKNESS (inches)	MAXIMUM WALL STUD SPACING (inches)	PANEL NAIL SPACING		MAXIMUM NOMINAL DESIGN WIND SPEED, V_{asd}[d] (MPH)		
Size	Penetration (inches)				Edges (inches o.c.)	Field (inches o.c.)	Wind exposure category		
							B	C	D
6d common (2.0" × 0.113")	1.5	24/0	3/8	16	6	12	110	90	85
		24/16	7/16	16	6	12	110	100	90
						6	150	125	110
8d common (2.5" × 0.131")	1.75	24/16	7/16	16	6	12	130	110	105
						6	150	125	110
				24	6	12	110	90	85
						6	110	90	85

For SI: 1 inch = 25.4 mm, 1 mile per hour = 0.447 m/s.

a. Panel strength axis shall be parallel or perpendicular to supports. Three-ply plywood sheathing with studs spaced more than 16 inches on center shall be applied with panel strength axis perpendicular to supports.

b. The table is based on wind pressures acting toward and away from building surfaces in accordance with Section 30.7 of ASCE 7. Lateral requirements shall be in accordance with Section 2305 or 2308.

c. Wood structural panels with span ratings of wall-16 or wall-24 shall be permitted as an alternative to panels with a 24/0 span rating. Plywood siding rated 16 on center or 24 on center shall be permitted as an alternative to panels with a 24/16 span rating. Wall-16 and plywood siding 16 on center shall be used with studs spaced a maximum of 16 inches on center.

d. V_{asd} shall be determined in accordance with Section 1609.3.1.

TABLE 2304.8(1)
ALLOWABLE SPANS FOR LUMBER FLOOR AND ROOF SHEATHING[a, b]

SPAN (inches)	MINIMUM NET THICKNESS (inches) OF LUMBER PLACED			
	Perpendicular to supports		Diagonally to supports	
	Surfaced dry[c]	Surfaced unseasoned	Surfaced dry[c]	Surfaced unseasoned
Floors				
24	$^3/_4$	$^{25}/_{32}$	$^3/_4$	$^{25}/_{32}$
16	$^5/_8$	$^{11}/_{16}$	$^5/_8$	$^{11}/_{16}$
Roofs				
24	$^5/_8$	$^{11}/_{16}$	$^3/_4$	$^{25}/_{32}$

For SI: 1 inch = 25.4 mm.

a. Installation details shall conform to Sections 2304.8.1 and 2304.8.2 for floor and roof sheathing, respectively.

b. Floor or roof sheathing complying with this table shall be deemed to meet the design criteria of Section 2304.7.

c. Maximum 19-percent moisture content.

TABLE 2304.8(2)
SHEATHING LUMBER, MINIMUM GRADE REQUIREMENTS: BOARD GRADE

SOLID FLOOR OR ROOF SHEATHING	SPACED ROOF SHEATHING	GRADING RULES
Utility	Standard	NLGA, WCLIB, WWPA
4 common or utility	3 common or standard	NLGA, WCLIB, WWPA, NSLB or NELMA
No. 3	No. 2	SPIB
Merchantable	Construction common	RIS

TABLE 2304.8(3)
ALLOWABLE SPANS AND LOADS FOR WOOD STRUCTURAL PANEL SHEATHING AND SINGLE-FLOOR GRADES CONTINUOUS OVER TWO OR MORE SPANS WITH STRENGTH AXIS PERPENDICULAR TO SUPPORTS[a, b]

SHEATHING GRADES		ROOF[c]				FLOOR[d]
Panel span rating roof/ floor span	Panel thickness (inches)	Maximum span (inches)		Load[e](psf)		Maximum span (inches)
		With edge support[f]	Without edge support	Total load	Live load	
16/0	$^3/_8$	16	16	40	30	0
20/0	$^3/_8$	20	20	40	30	0
24/0	$^3/_8$, $^7/_{16}$, $^1/_2$	24	20[g]	40	30	0
24/16	$^7/_{16}$, $^1/_2$	24	24	50	40	16
32/16	$^{15}/_{32}$, $^1/_2$, $^5/_8$	32	28	40	30	16[h]
40/20	$^{19}/_{32}$, $^5/_8$, $^3/_4$, $^7/_8$	40	32	40	30	20[h,i]
48/24	$^{23}/_{32}$, $^3/_4$, $^7/_8$	48	36	45	35	24
54/32	$^7/_8$, 1	54	40	45	35	32
60/32	$^7/_8$, $1^1/_8$	60	48	45	35	32
SINGLE FLOOR GRADES		**ROOF[c]**				**FLOOR[d]**
Panel span rating	Panel thickness (inches)	Maximum span (inches)		Load[e](psf)		Maximum span (inches)
		With edge support[f]	Without edge support	Total load	Live load	
16 o.c.	$^1/_2$, $^{19}/_{32}$, $^5/_8$	24	24	50	40	16[h]
20 o.c.	$^{19}/_{32}$, $^5/_8$, $^3/_4$	32	32	40	30	20[h,i]
24 o.c.	$^{23}/_{32}$, $^3/_4$	48	36	35	25	24
32 o.c.	$^7/_8$, 1	48	40	50	40	32
48 o.c.	$1^3/_{32}$, $1^1/_8$	60	48	50	40	48

For SI: 1 inch = 25.4 mm, 1 pound per square foot = 0.0479 kN/m^2.

a. Applies to panels 24 inches or wider.

b. Floor and roof sheathing complying with this table shall be deemed to meet the design criteria of Section 2304.8.

c. Uniform load deflection limitations $^1/_{180}$ of span under live load plus dead load, $^1/_{240}$ under live load only.

d. Panel edges shall have approved tongue-and-groove joints or shall be supported with blocking unless $^1/_4$-inch minimum thickness underlayment or $1^1/_2$ inches of approved cellular or lightweight concrete is placed over the subfloor, or finish floor is $^3/_4$-inch wood strip. Allowable uniform load based on deflection of $^1/_{360}$ of span is 100 pounds per square foot except the span rating of 48 inches on center is based on a total load of 65 pounds per square foot.

e. Allowable load at maximum span.

f. Tongue-and-groove edges, panel edge clips (one midway between each support, except two equally spaced between supports 48 inches on center), lumber blocking or other. Only lumber blocking shall satisfy blocked diaphragm requirements.

g. For $^1/_2$-inch panel, maximum span shall be 24 inches.

h. Span is permitted to be 24 inches on center where $^3/_4$-inch wood strip flooring is installed at right angles to joist.

i. Span is permitted to be 24 inches on center for floors where $1^1/_2$ inches of cellular or lightweight concrete is applied over the panels.

TABLE 2304.8(4)
ALLOWABLE SPAN FOR WOOD STRUCTURAL PANEL COMBINATION SUBFLOOR-UNDERLAYMENT (SINGLE FLOOR)[a, b]
(Panels Continuous Over Two or More Spans and Strength Axis Perpendicular to Supports)

IDENTIFICATION	MAXIMUM SPACING OF JOISTS (inches)				
	16	20	24	32	48
Species group[c]	Thickness (inches)				
1	$^1/_2$	$^5/_8$	$^3/_4$	—	—
2, 3	$^5/_8$	$^3/_4$	$^7/_8$	—	—
4	$^3/_4$	$^7/_8$	1	—	—
Single floor span rating[d]	16 o.c.	20 o.c.	24 o.c.	32 o.c.	48 o.c.

For SI: 1 inch = 25.4 mm, 1 pound per square foot = 0.0479 kN/m^2.

a. Spans limited to value shown because of possible effects of concentrated loads. Allowable uniform loads based on deflection of $^1/_{360}$ of span is 100 pounds per square foot except allowable total uniform load for $1^1/_8$-inch wood structural panels over joists spaced 48 inches on center is 65 pounds per square foot. Panel edges shall have approved tongue-and-groove joints or shall be supported with blocking, unless $^1/_4$-inch minimum thickness underlayment or $1^1/_2$ inches of approved cellular or lightweight concrete is placed over the subfloor, or finish floor is $^3/_4$-inch wood strip.

b. Floor panels complying with this table shall be deemed to meet the design criteria of Section 2304.8.

c. Applicable to all grades of sanded exterior-type plywood. See DOC PS 1 for plywood species groups.

d. Applicable to Underlayment grade, C-C (Plugged) plywood, and Single Floor grade wood structural panels.

TABLE 2304.8(5)
ALLOWABLE LOAD (PSF) FOR WOOD STRUCTURAL PANEL ROOF SHEATHING CONTINUOUS OVER TWO OR MORE SPANS AND STRENGTH AXIS PARALLEL TO SUPPORTS
(Plywood Structural Panels Are Five-Ply, Five-Layer Unless Otherwise Noted)[a, b]

PANEL GRADE	THICKNESS (inch)	MAXIMUM SPAN (inches)	LOAD AT MAXIMUM SPAN (psf)	
			Live	Total
Structural I sheathing	$^7/_{16}$	24	20	30
	$^{15}/_{32}$	24	35[c]	45[c]
	$^1/_2$	24	40[c]	50[c]
	$^{19}/_{32}$, $^5/_8$	24	70	80
	$^{23}/_{32}$, $^3/_4$	24	90	100
Sheathing, other grades covered in DOC PS 1 or DOC PS 2	$^7/_{16}$	16	40	50
	$^{15}/_{32}$	24	20	25
	$^1/_2$	24	25	30
	$^{19}/_{32}$	24	40[c]	50[c]
	$^5/_8$	24	45[c]	55[c]
	$^{23}/_{32}$, $^3/_4$	24	60[c]	65[c]

For SI: 1 inch = 25.4 mm, 1 pound per square foot = 0.0479 kN/m^2.

a. Roof sheathing complying with this table shall be deemed to meet the design criteria of Section 2304.8.

b. Uniform load deflection limitations $^1/_{180}$ of span under live load plus dead load, $^1/_{240}$ under live load only. Edges shall be blocked with lumber or other approved type of edge supports.

c. For composite and four-ply plywood structural panel, load shall be reduced by 15 pounds per square foot.

2304.9.2 Layup patterns. Lumber decking is permitted to be laid up following one of five standard patterns as defined in Sections 2304.9.2.1 through 2304.9.2.5. Other patterns are permitted to be used provided they are substantiated through engineering analysis.

2304.9.2.1 Simple span pattern. All pieces shall be supported on their ends (i.e., by two supports).

2304.9.2.2 Two-span continuous pattern. All pieces shall be supported by three supports, and all end joints shall occur in line on alternating supports. Supporting members shall be designed to accommodate the load redistribution caused by this pattern.

2304.9.2.3 Combination simple and two-span continuous pattern. Courses in end spans shall be alternating simple-span pattern and two-span continuous pattern. End joints shall be staggered in adjacent courses and shall bear on supports.

2304.9.2.4 Cantilevered pieces intermixed pattern. The decking shall extend across a minimum of three spans. Pieces in each starter course and every third course shall be simple span pattern. Pieces in other courses shall be cantilevered over the supports with end joints at alternating quarter or third points of the spans. Each piece shall bear on at least one support.

2304.9.2.5 Controlled random pattern. The decking shall extend across a minimum of three spans. End joints of pieces within 6 inches (152 mm) of the end joints of the adjacent pieces in either direction shall be separated by at least two intervening courses. In the end

bays, each piece shall bear on at least one support. Where an end joint occurs in an end bay, the next piece in the same course shall continue over the first inner support for at least 24 inches (610 mm). The details of the controlled random pattern shall be as specified for each decking material in Section 2304.9.3.3, 2304.9.4.3 or 2304.9.5.3.

Decking that cantilevers beyond a support for a horizontal distance greater than 18 inches (457 mm), 24 inches (610 mm) or 36 inches (914 mm) for 2-inch (51 mm), 3-inch (76 mm) and 4-inch (102 mm) nominal thickness decking, respectively, shall comply with the following:

1. The maximum cantilevered length shall be 30 percent of the length of the first adjacent interior span.
2. A structural fascia shall be fastened to each decking piece to maintain a continuous, straight line.
3. There shall be no end joints in the decking between the cantilevered end of the decking and the centerline of the first adjacent interior span.

2304.9.3 Mechanically laminated decking. Mechanically laminated decking shall comply with Sections 2304.9.3.1 through 2304.9.3.3.

2304.9.3.1 General. Mechanically laminated decking consists of square-edged dimension lumber laminations set on edge and nailed to the adjacent pieces and to the supports.

2304.9.3.2 Nailing. The length of nails connecting laminations shall be not less than two and one-half times the net thickness of each lamination. Where decking supports are 48 inches (1219 mm) on center or less, side nails shall be installed not more than 30 inches (762 mm) on center alternating between top and bottom edges, and staggered one-third of the spacing in adjacent laminations. Where supports are spaced more than 48 inches (1219 mm) on center, side nails shall be installed not more than 18 inches (457 mm) on center alternating between top and bottom edges and staggered one-third of the spacing in adjacent laminations. Two side nails shall be installed at each end of butt-jointed pieces.

Laminations shall be toenailed to supports with 20d or larger common nails. Where the supports are 48 inches (1219 mm) on center or less, alternate laminations shall be toenailed to alternate supports; where supports are spaced more than 48 inches (1219 mm) on center, alternate laminations shall be toenailed to every support.

2304.9.3.3 Controlled random pattern. There shall be a minimum distance of 24 inches (610 mm) between end joints in adjacent courses. The pieces in the first and second courses shall bear on at least two supports with end joints in these two courses occurring on alternate supports. A maximum of seven intervening courses shall be permitted before this pattern is repeated.

2304.9.4 Two-inch sawn tongue-and-groove decking. Two-inch (51 mm) sawn tongue-and-groove decking shall comply with Sections 2304.9.4.1 through 2304.9.4.3.

2304.9.4.1 General. Two-inch (51 mm) decking shall have a maximum moisture content of 15 percent. Decking shall be machined with a single tongue-and-groove pattern. Each decking piece shall be nailed to each support.

2304.9.4.2 Nailing. Each piece of decking shall be toenailed at each support with one 16d common nail through the tongue and face-nailed with one 16d common nail.

2304.9.4.3 Controlled random pattern. There shall be a minimum distance of 24 inches (610 mm) between end joints in adjacent courses. The pieces in the first and second courses shall bear on at least two supports with end joints in these two courses occurring on alternate supports. A maximum of seven intervening courses shall be permitted before this pattern is repeated.

2304.9.5 Three- and four-inch sawn tongue-and-groove decking. Three- and four-inch (76 mm and 102 mm) sawn tongue-and-groove decking shall comply with Sections 2304.9.5.1 through 2304.9.5.3.

2304.9.5.1 General. Three-inch (76 mm) and four-inch (102 mm) decking shall have a maximum moisture content of 19 percent. Decking shall be machined with a double tongue-and-groove pattern. Decking pieces shall be interconnected and nailed to the supports.

2304.9.5.2 Nailing. Each piece shall be toenailed at each support with one 40d common nail and face-nailed with one 60d common nail. Courses shall be spiked to each other with 8-inch (203 mm) spikes at maximum intervals of 30 inches (762 mm) through predrilled edge holes penetrating to a depth of approximately 4 inches (102 mm). One spike shall be installed at a distance not exceeding 10 inches (254 mm) from the end of each piece.

2304.9.5.3 Controlled random pattern. There shall be a minimum distance of 48 inches (1219 mm) between end joints in adjacent courses. Pieces not bearing on a support are permitted to be located in interior bays provided the adjacent pieces in the same course continue over the support for at least 24 inches (610 mm). This condition shall not occur more than once in every six courses in each interior bay.

2304.10 Connectors and fasteners. Connectors and fasteners shall comply with the applicable provisions of Sections 2304.10.1 through 2304.10.7.

2304.10.1 Fastener requirements. Connections for wood members shall be designed in accordance with the appropriate methodology in Section 2301.2. The number and size of fasteners connecting wood members shall not be less than that set forth in Table 2304.10.1.

2304.10.2 Sheathing fasteners. Sheathing nails or other *approved* sheathing connectors shall be driven so that their head or crown is flush with the surface of the sheathing.

2304.10.3 Joist hangers and framing anchors. Connections depending on joist hangers or framing anchors, ties and other mechanical fastenings not otherwise covered are permitted where *approved*. The vertical load-bearing capacity, torsional moment capacity and deflection characteristics of joist hangers shall be determined in accordance with ASTM D 7147.

2304.10.4 Other fasteners. Clips, staples, glues and other *approved* methods of fastening are permitted where *approved*.

2304.10.5 Fasteners and connectors in contact with preservative-treated and fire-retardant-treated wood. Fasteners, including nuts and washers, and connectors in contact with *preservative-treated* and *fire-retardant-treated wood* shall be in accordance with Sections 2304.10.5.1 through 2304.10.5.4. The coating weights for zinc-coated fasteners shall be in accordance with ASTM A 153.

2304.10.5.1 Fasteners and connectors for preservative-treated wood. Fasteners, including nuts and washers, in contact with *preservative-treated wood* shall be of hot-dipped zinc-coated galvanized steel, stainless steel, silicon bronze or copper. Fasteners other than nails, timber rivets, wood screws and lag screws shall be permitted to be of mechanically deposited zinc-coated steel with coating weights in accordance with ASTM B 695, Class 55 minimum. Connectors that are used in exterior applications and in contact with *preservative-treated wood* shall have coating types and weights in accordance with the treated wood or connector manufacturer's recommendations. In the absence of manufacturer's recommendations, a minimum of ASTM A 653, Type G185 zinc-coated galvanized steel, or equivalent, shall be used.

Exception: Plain carbon steel fasteners, including nuts and washers, in SBX/DOT and zinc borate *preservative-treated wood* in an interior, dry environment shall be permitted.

2304.10.5.2 Fastenings for wood foundations. Fastenings, including nuts and washers, for wood foundations shall be as required in AWC PWF.

2304.10.5.3 Fasteners for fire-retardant-treated wood used in exterior applications or wet or damp locations. Fasteners, including nuts and washers, for *fire-retardant-treated wood* used in exterior applications or wet or damp locations shall be of hot-dipped zinc-coated galvanized steel, stainless steel, silicon bronze or copper. Fasteners other than nails, timber rivets, wood screws and lag screws shall be permitted to be of mechanically deposited zinc-coated steel with coating weights in accordance with ASTM B 695, Class 55 minimum.

2304.10.5.4 Fasteners for fire-retardant-treated wood used in interior applications. Fasteners, including nuts and washers, for *fire-retardant-treated wood* used in interior locations shall be in accordance with the manufacturer's recommendations. In the absence of manufacturer's recommendations, Section 2304.10.5.3 shall apply.

2304.10.6 Load path. Where wall framing members are not continuous from the foundation sill to the roof, the members shall be secured to ensure a continuous load path. Where required, sheet metal clamps, ties or clips shall be formed of galvanized steel or other *approved* corrosion-resistant material not less than 0.0329-inch (0.836 mm) base metal thickness.

2304.10.7 Framing requirements. Wood columns and posts shall be framed to provide full end bearing. Alternatively, column-and-post end connections shall be designed to resist the full compressive loads, neglecting end-bearing capacity. Column-and-post end connections shall be fastened to resist lateral and net induced uplift forces.

2304.11 Heavy timber construction. Where a structure or portion thereof is required to be of Type IV construction by other provisions of this code, the building elements therein shall comply with the applicable provisions of Sections 2304.11.1 through 2304.11.5.

2304.11.1 Columns. Columns shall be continuous or superimposed throughout all stories by means of reinforced concrete or metal caps with brackets, or shall be connected by properly designed steel or iron caps, with pintles and base plates, or by timber splice plates affixed to the columns by metal connectors housed within the contact faces, or by other *approved* methods.

2304.11.1.1 Column connections. Girders and beams shall be closely fitted around columns and adjoining ends shall be cross tied to each other, or intertied by caps or ties, to transfer horizontal loads across joints. Wood bolsters shall not be placed on tops of columns unless the columns support roof loads only.

2304.11.2 Floor framing. *Approved* wall plate boxes or hangers shall be provided where wood beams, girders or trusses rest on masonry or concrete walls. Where intermediate beams are used to support a floor, they shall rest on top of girders, or shall be supported by ledgers or blocks securely fastened to the sides of the girders, or they shall be supported by an *approved* metal hanger into which the ends of the beams shall be closely fitted.

2304.11.3 Roof framing. Every roof girder and at least every alternate roof beam shall be anchored to its supporting member; and every monitor and every sawtooth construction shall be anchored to the main roof construction. Such anchors shall consist of steel or iron bolts of sufficient strength to resist vertical uplift of the roof.

2304.11.4 Floor decks. Floor decks and covering shall not extend closer than $^1/_2$ inch (12.7 mm) to walls. Such $^1/_2$-inch (12.7 mm) spaces shall be covered by a molding fastened to the wall either above or below the floor and arranged such that the molding will not obstruct the expansion or contraction movements of the floor. Corbeling of masonry walls under floors is permitted in place of such molding.

TABLE 2304.10.1
FASTENING SCHEDULE

DESCRIPTION OF BUILDING ELEMENTS	NUMBER AND TYPE OF FASTENER	SPACING AND LOCATION
Roof		
1. Blocking between ceiling joists, rafters or trusses to top plate or other framing below	3-8d common ($2^1/_2$″ × 0.131″); or 3-10d box (3″ × 0.128″); or 3-3″ × 0.131″ nails; or 3-3″ 14 gage staples, $^7/_{16}$″ crown	Each end, toenail
Blocking between rafters or truss not at the wall top plate, to rafter or truss	2-8d common ($2^1/_2$″ × 0.131″) 2-3″ × 0.131″ nails 2-3″ 14 gage staples	Each end, toenail
	2-16 d common ($3^1/_2$″ × 0.162″) 3-3″ × 0.131″ nails 3-3″ 14 gage staples	End nail
Flat blocking to truss and web filler	16d common ($3^1/_2$″ × 0.162″) @ 6″ o.c. 3″ × 0.131″ nails @ 6″ o.c. 3″ × 14 gage staples @ 6″ o.c	Face nail
2. Ceiling joists to top plate	3-8d common ($2^1/_2$″ × 0.131″); or 3-10d box (3″ × 0.128″); or 3-3″ × 0.131″ nails; or 3-3″ 14 gage staples, $^7/_{16}$″ crown	Each joist, toenail
3. Ceiling joist not attached to parallel rafter, laps over partitions (no thrust) (see Section 2308.7.3.1, Table 2308.7.3.1)	3-16d common ($3^1/_2$″ × 0.162″); or 4-10d box (3″ × 0.128″); or 4-3″ × 0.131″ nails; or 4-3″ 14 gage staples, $^7/_{16}$″ crown	Face nail
4. Ceiling joist attached to parallel rafter (heel joint) (see Section 2308.7.3.1, Table 2308.7.3.1)	Per Table 2308.7.3.1	Face nail
5. Collar tie to rafter	3-10d common (3″ × 0.148″); or 4-10d box (3″ × 0.128″); or 4-3″ × 0.131″ nails; or 4-3″ 14 gage staples, $^7/_{16}$″ crown	Face nail
6. Rafter or roof truss to top plate (See Section 2308.7.5, Table 2308.7.5)	3-10 common (3″ × 0.148″); or 3-16d box ($3^1/_2$″ × 0.135″); or 4-10d box (3″ × 0.128″); or 4-3″ × 0.131 nails; or 4-3″ 14 gage staples, $^7/_{16}$″ crown	Toenail[c]
7. Roof rafters to ridge valley or hip rafters; or roof rafter to 2-inch ridge beam	2-16d common ($3^1/_2$″ × 0.162″); or 3-10d box (3″ × 0.128″); or 3-3″ × 0.131″ nails; or 3-3″ 14 gage staples, $^7/_{16}$″ crown; or	End nail
	3-10d common ($3^1/_2$″ × 0.148″); or 3-16d box ($3^1/_2$″ × 0.135″); or 4-10d box (3″ × 0.128″); or 4-3″ × 0.131″ nails; or 4-3″ 14 gage staples, $^7/_{16}$″ crown	Toenail

(continued)

TABLE 2304.10.1—continued
FASTENING SCHEDULE

DESCRIPTION OF BUILDING ELEMENTS	NUMBER AND TYPE OF FASTENER	SPACING AND LOCATION
Wall		
8. Stud to stud (not at braced wall panels)	16d common ($3^1/_2$″ × 0.162″);	24″ o.c. face nail
	10d box (3″ × 0.128″); or 3″ × 0.131″ nails; or 3-3″ 14 gage staples, $^7/_{16}$″ crown	16″ o.c. face nail
9. Stud to stud and abutting studs at intersecting wall corners (at braced wall panels)	16d common ($3^1/_2$″ × 0.162″); or	16″ o.c. face nail
	16d box ($3^1/_2$″ × 0.135″); or	12″ o.c. face nail
	3″ × 0.131″ nails; or 3-3″ 14 gage staples, $^7/_{16}$″ crown	12″ o.c. face nail
10. Built-up header (2″ to 2″ header)	16d common ($3^1/_2$″ × 0.162″); or	16″ o.c. each edge, face nail
	16d box ($3^1/_2$″ × 0.135")	12″ o.c. each edge, face nail
11. Continuous header to stud	4-8d common ($2^1/_2$″ × 0.131″); or 4-10d box (3″ × 0.128″)	Toenail
12. Top plate to top plate	16d common ($3^1/_2$″ × 0.162″); or	16″ o.c. face nail
	10d box (3″ × 0.128″); or 3″ × 0.131″ nails; or 3″ 14 gage staples, $^7/_{16}$″ crown	12″ o.c. face nail
13. Top plate to top plate, at end joints	8-16d common ($3^1/_2$″ × 0.162″); or 12-10d box (3″ × 0.128″); or 12-3″ × 0.131″ nails; or 12-3″ 14 gage staples, $^7/_{16}$″ crown	Each side of end joint, face nail (minimum 24" lap splice length each side of end joint)
14. Bottom plate to joist, rim joist, band joist or blocking (not at braced wall panels)	16d common ($3^1/_2$″ × 0.162″); or	16" o.c. face nail
	16d box ($3^1/_2$″ × 0.135″); or 3″ × 0.131″ nails; or 3″ 14 gage staples, $^7/_{16}$″ crown	12" o.c. face nail
15. Bottom plate to joist, rim joist, band joist or blocking at braced wall panels	2-16d common ($3^1/_2$″ × 0.162″); or 3-16d box ($3^1/_2$″ × 0.135″); or 4-3″ × 0.131″ nails; or 4-3″ 14 gage staples, $^7/_{16}$″ crown	16" o.c. face nail
16. Stud to top or bottom plate	4-8d common ($2^1/_2$″ × 0.131″); or 4-10d box (3″ × 0.128″); or 4-3″ × 0.131″ nails; or 4-3″ 14 gage staples, $^7/_{16}$″ crown; or	Toenail
	2-16d common ($3^1/_2$″ × 0.162″); or 3-10d box (3″ × 0.128″); or 3-3″ × 0.131″ nails; or 3-3″ 14 gage staples, $^7/_{16}$″ crown	End nail
17. Top or bottom plate to stud	2-16d common ($3^1/_2$″ × 0.162″); or 3-10d box (3″ × 0.128″); or 3-3″ × 0.131″ nails; or 3-3″ 14 gage staples, $^7/_{16}$″ crown	End nail
18. Top plates, laps at corners and intersections	2-16d common ($3^1/_2$″ × 0.162″); or 3-10d box (3″ × 0.128″); or 3-3″ × 0.131″ nails; or 3-3″ 14 gage staples, $^7/_{16}$″ crown	Face nail

(continued)

TABLE 2304.10.1—continued
FASTENING SCHEDULE

DESCRIPTION OF BUILDING ELEMENTS	NUMBER AND TYPE OF FASTENER	SPACING AND LOCATION
Wall		
19. 1″ brace to each stud and plate	2-8d common ($2^1/_2$″ × 0.131″); or 2-10d box (3″ × 0.128″); or 2-3″ × 0.131″ nails; or 2-3″ 14 gage staples, $^7/_{16}$″ crown	Face nail
20. 1″ × 6″ sheathing to each bearing	2-8d common ($2^1/_2$″ × 0.131″); or 2-10d box (3″ × 0.128″)	Face nail
21. 1″ × 8″ and wider sheathing to each bearing	3-8d common ($2^1/_2$″ × 0.131″); or 3-10d box (3″ × 0.128″)	Face nail
Floor		
22. Joist to sill, top plate, or girder	3-8d common ($2^1/_2$″ × 0.131″); or floor 3-10d box (3″ × 0.128″); or 3-3″ × 0.131″ nails; or 3-3″ 14 gage staples, $^7/_{16}$″ crown	Toenail
23. Rim joist, band joist, or blocking to top plate, sill or other framing below	8d common ($2^1/_2$″ × 0.131″); or 10d box (3″ × 0.128″); or 3″ × 0.131″ nails; or 3″ 14 gage staples, $^7/_{16}$″ crown	6" o.c., toenail
24. 1″ × 6″ subfloor or less to each joist	2-8d common ($2^1/_2$″ × 0.131″); or 2-10d box (3″ × 0.128″)	Face nail
25. 2″ subfloor to joist or girder	2-16d common ($3^1/_2$″ × 0.162″)	Face nail
26. 2″ planks (plank & beam – floor & roof)	2-16d common ($3^1/_2$″ × 0.162″)	Each bearing, face nail
27. Built-up girders and beams, 2″ lumber layers	20d common (4″ × 0.192″)	32" o.c., face nail at top and bottom staggered on opposite sides
	10d box (3″ × 0.128″); or 3″ × 0.131″ nails; or 3″ 14 gage staples, $^7/_{16}$″ crown	24" o.c. face nail at top and bottom staggered on opposite sides
	And: 2-20d common (4″ × 0.192″); or 3-10d box (3″ × 0.128″); or 3-3″ × 0.131″ nails; or 3-3″ 14 gage staples, $^7/_{16}$″ crown	Ends and at each splice, face nail
28. Ledger strip supporting joists or rafters	3-16d common ($3^1/_2$″ × 0.162″); or 4-10d box (3″ × 0.128″); or 4-3″ × 0.131″ nails; or 4-3″ 14 gage staples, $^7/_{16}$″ crown	Each joist or rafter, face nail
29. Joist to band joist or rim joist	3-16d common ($3^1/_2$″ × 0.162″); or 4-10d box (3″ × 0.128″); or 4-3″ × 0.131″ nails; or 4-3″ 14 gage staples, $^7/_{16}$″ crown	End nail
30. Bridging or blocking to joist, rafter or truss	2-8d common ($2^1/_2$″ × 0.131″); or 2-10d box (3″ × 0.128″); or 2-3″ × 0.131″ nails; or 2-3″ 14 gage staples, $^7/_{16}$″ crown	Each end, toenail

(continued)

TABLE 2304.10.1—continued
FASTENING SCHEDULE

DESCRIPTION OF BUILDING ELEMENTS	NUMBER AND TYPE OF FASTENER	SPACING AND LOCATION	
Wood structural panels (WSP), subfloor, roof and interior wall sheathing to framing and particleboard wall sheathing to framing[a]			
		Edges (inches)	Intermediate supports (inches)
31. $^3/_8$″ – $^1/_2$″	6d common or deformed (2″ × 0.113″) (subfloor and wall)	6	12
	8d box or deformed ($2^1/_2$″ × 0.113″) (roof)	6	12
	$2^3/_8$″ × 0.113″ nail (subfloor and wall)	6	12
	$1^3/_4$″ 16 gage staple, $^7/_{16}$″ crown (subfloor and wall)	4	8
	$2^3/_8$″ × 0.113″ nail (roof)	4	8
	$1^3/_4$″ 16 gage staple, $^7/_{16}$″ crown (roof)	3	6
32. $^{19}/_{32}$″ – $^3/_4$″	8d common ($2^1/_2$″ × 0.131″); or 6d deformed (2″ × 0.113″)	6	12
	$2^3/_8$″ × 0.113″ nail; or 2″ 16 gage staple, $^7/_{16}$″ crown	4	8
33. $^7/_8$″ – $1^1/_4$″	10d common (3″ × 0.148″); or 8d deformed ($2^1/_2$″ × 0.131″)	6	12
Other exterior wall sheathing			
34. $^1/_2$″ fiberboard sheathing[b]	$1^1/_2$″ galvanized roofing nail ($^7/_{16}$″ head diameter); or $1^1/_4$″ 16 gage staple with $^7/_{16}$″ or 1″ crown	3	6
35. $^{25}/_{32}$″ fiberboard sheathing[b]	$1^3/_4$″ galvanized roofing nail ($^7/_{16}$″ diameter head); or $1^1/_2$″ 16 gage staple with $^7/_{16}$″ or 1″ crown	3	6
Wood structural panels, combination subfloor underlayment to framing			
36. $^3/_4$″ and less	8d common ($2^1/_2$″ × 0.131″); or 6d deformed (2″ × 0.113″)	6	12
37. $^7/_8$″ – 1″	8d common ($2^1/_2$″ × 0.131″); or 8d deformed ($2^1/_2$″ × 0.131″)	6	12
38. $1^1/_8$″ – $1^1/_4$″	10d common (3″ × 0.148″); or 8d deformed ($2^1/_2$″ × 0.131″)	6	12
Panel siding to framing			
39. $^1/_2$″ or less	6d corrosion-resistant siding ($1^7/_8$″ × 0.106″); or 6d corrosion-resistant casing (2″ × 0.099″)	6	12
40. $^5/_8$″	8d corrosion-resistant siding ($2^3/_8$″ × 0.128″); or 8d corrosion-resistant casing ($2^1/_2$″ × 0.113″)	6	12

(continued)

TABLE 2304.10.1—continued
FASTENING SCHEDULE

DESCRIPTION OF BUILDING ELEMENTS	NUMBER AND TYPE OF FASTENER	SPACING AND LOCATION	
Wood structural panels (WSP), subfloor, roof and interior wall sheathing to framing and particleboard wall sheathing to framing[a]			
		Edges (inches)	Intermediate supports (inches)
Interior paneling			
41. $^1/_4$″	4d casing ($1^1/_2$″ × 0.080″); or 4d finish ($1^1/_2$″ × 0.072″)	6	12
42. $^3/_8$″	6d casing (2″ × 0.099″); or 6d finish (Panel supports at 24 inches)	6	12

For SI: 1 inch = 25.4 mm.

a. Nails spaced at 6 inches at intermediate supports where spans are 48 inches or more. For nailing of wood structural panel and particleboard diaphragms and shear walls, refer to Section 2305. Nails for wall sheathing are permitted to be common, box or casing.

b. Spacing shall be 6 inches on center on the edges and 12 inches on center at intermediate supports for nonstructural applications. Panel supports at 16 inches (20 inches if strength axis in the long direction of the panel, unless otherwise marked).

c. Where a rafter is fastened to an adjacent parallel ceiling joist in accordance with this schedule and the ceiling joist is fastened to the top plate in accordance with this schedule, the number of toenails in the rafter shall be permitted to be reduced by one nail.

2304.11.5 Roof decks. Where supported by a wall, roof decks shall be anchored to walls to resist uplift forces determined in accordance with Chapter 16. Such anchors shall consist of steel or iron bolts of sufficient strength to resist vertical uplift of the roof.

2304.12 Protection against decay and termites. Wood shall be protected from decay and termites in accordance with the applicable provisions of Sections 2304.12.1 through 2304.12.7.

2304.12.1 Locations requiring water-borne preservatives or naturally durable wood. Wood used above ground in the locations specified in Sections 2304.12.1.1 through 2304.12.1.5, 2304.12.3 and 2304.12.5 shall be naturally durable wood or *preservative-treated wood* using water-borne preservatives, in accordance with AWPA U1 for above-ground use.

2304.12.1.1 Joists, girders and subfloor. Wood joists or wood structural floors that are closer than 18 inches (457 mm) or wood girders that are closer than 12 inches (305 mm) to the exposed ground in crawl spaces or unexcavated areas located within the perimeter of the building foundation shall be of naturally durable or *preservative-treated wood.*

2304.12.1.2 Wood supported by exterior foundation walls. Wood framing members, including wood sheathing, that are in contact with exterior foundation walls and are less than 8 inches (203 mm) from exposed earth shall be of naturally durable or *preservative-treated wood.*

2304.12.1.3 Exterior walls below grade. Wood framing members and furring strips in direct contact with the interior of exterior masonry or concrete walls below grade shall be of naturally durable or *preservative-treated wood.*

2304.12.1.4 Sleepers and sills. Sleepers and sills on a concrete or masonry slab that is in direct contact with earth shall be of naturally durable or *preservative-treated wood.*

2304.12.1.5 Wood siding. Clearance between wood siding and earth on the exterior of a building shall not be less than 6 inches (152 mm) or less than 2 inches (51 mm) vertical from concrete steps, porch slabs, patio slabs and similar horizontal surfaces exposed to the weather except where siding, sheathing and wall framing are of naturally durable or *preservative-treated wood.*

2304.12.2 Other locations. Wood used in the locations specified in Sections 2304.12.2.1 through 2304.12.2.5 shall be naturally durable wood or *preservative-treated* wood in accordance with AWPA U1. *Preservative-treated* wood used in interior locations shall be protected with two coats of urethane, shellac, latex epoxy or varnish unless water-borne preservatives are used. Prior to application of the protective finish, the wood shall be dried in accordance with the manufacturer's recommendations.

2304.12.2.1 Girder ends. The ends of wood girders entering exterior masonry or concrete walls shall be provided with a $^1/_2$-inch (12.7 mm) airspace on top, sides and end, unless naturally durable or *preservative-treated wood* is used.

2304.12.2.2 Posts or columns. Posts or columns supporting permanent structures and supported by a concrete or masonry slab or footing that is in direct contact with the earth shall be of naturally durable or *preservative-treated wood.*

Exception: Posts or columns that are not exposed to the weather, are supported by concrete piers or metal pedestals projected at least 1 inch (25 mm) above the slab or deck and 8 inches (152 mm) above exposed earth and are separated by an impervious moisture barrier.

2304.12.2.3 Supporting member for permanent appurtenances. Naturally durable or *preservative-treated wood* shall be utilized for those portions of wood members that form the structural supports of buildings, balconies, porches or similar permanent building appurtenances where such members are

exposed to the weather without adequate protection from a roof, eave, overhang or other covering to prevent moisture or water accumulation on the surface or at joints between members.

Exception: When a building is located in a geographical region where experience has demonstrated that climatic conditions preclude the need to use durable materials where the structure is exposed to the weather.

2304.12.2.4 Laminated timbers. The portions of glued-laminated timbers that form the structural supports of a building or other structure and are exposed to weather and not fully protected from moisture by a roof, eave or similar covering shall be pressure treated with preservative or be manufactured from naturally durable or *preservative-treated wood.*

** **2304.12.2.5 Supporting members for permeable floors and roofs.** Wood structural members that support moisture-permeable floors or roofs that are exposed to the weather, such as concrete or masonry slabs, shall be of naturally durable or *preservative-treated wood* unless separated from such floors or roofs by an impervious moisture barrier.

2304.12.3 Wood in contact with the ground or fresh water. Wood used in contact with exposed earth shall be naturally durable for both decay and termite resistance or preservative treated in accordance with AWPA U1 for soil or fresh water use.

Exception: Untreated wood is permitted where such wood is continuously and entirely below the groundwater level or submerged in fresh water.

2304.12.3.1 Posts or columns. Posts and columns that are supporting permanent structures and embedded in concrete that is exposed to the weather or in direct contact with the earth shall be of *preservative-treated wood.*

* **2304.12.4 Termite protection.** In geographical areas where hazard of termite damage is known to be very heavy, wood floor framing in the locations specified in Section 2304.12.2.1 and exposed framing of exterior decks or balconies shall be of naturally durable species (termite resistant) or preservative treated in accordance with AWPA U1 for the species, product preservative and end use or provided with *approved* methods of termite protection.

2304.12.5 Wood used in retaining walls and cribs. Wood installed in retaining or crib walls shall be preservative treated in accordance with AWPA U1 for soil and fresh water use.

2304.12.6 Attic ventilation. For *attic* ventilation, see Section 1203.2.

2304.12.7 Under-floor ventilation (crawl space). For under-floor ventilation (crawl space), see Section 1203.4.

2304.13 Long-term loading. Wood members supporting concrete, masonry or similar materials shall be checked for the effects of long-term loading using the provisions of the AWC NDS. The total deflection, including the effects of long-term loading, shall be limited in accordance with Section 1604.3.1 for these supported materials.

Exception: Horizontal wood members supporting masonry or concrete nonstructural floor or roof surfacing not more than 4 inches (102 mm) thick need not be checked for long-term loading.

SECTION 2305
GENERAL DESIGN REQUIREMENTS FOR LATERAL FORCE-RESISTING SYSTEMS

2305.1 General. Structures using wood-frame shear walls or wood-frame diaphragms to resist wind, seismic or other lateral loads shall be designed and constructed in accordance with AF&PA SDPWS and the applicable provisions of Sections 2305, 2306 and 2307.

2305.1.1 Openings in shear panels. Openings in shear panels that materially affect their strength shall be detailed on the plans and shall have their edges adequately reinforced to transfer all shearing stresses.

2305.2 Diaphragm deflection. The deflection of wood-frame diaphragms shall be determined in accordance with AF&PA SDPWS. The deflection (Δ) of a blocked wood structural panel diaphragm uniformly fastened throughout with staples is permitted to be calculated in accordance with Equation 23-1. If not uniformly fastened, the constant 0.188 (For SI: 1/1627) in the third term shall be modified by an approved method.

$$\Delta = \frac{5vL^3}{8EAb} + \frac{vL}{4Gt} + 0.188Le_n + \frac{\Sigma(\Delta_c X)}{2b} \quad \textbf{(Equation 23-1)}$$

$$\text{For SI: } \Delta = \frac{0.052vL^3}{EAb} + \frac{vL}{4Gt} + \frac{Le_n}{1627} + \frac{\Sigma(\Delta_c X)}{2b}$$

where:

A = Area of chord cross section, in square inches (mm^2).

b = Diaphragm width, in feet (mm).

E = Elastic modulus of chords, in pounds per square inch (N/mm^2).

e_n = Staple deformation, in inches (mm) [see Table 2305.2(1)].

Gt = Panel rigidity through the thickness, in pounds per inch (N/mm) of panel width or depth [see Table 2305.2(2)].

L = Diaphragm length, in feet (mm).

v = Maximum shear due to design loads in the direction under consideration, in pounds per linear foot (plf) (N/mm).

Δ = The calculated deflection, in inches (mm).

$\Sigma(\Delta_c X)$ = Sum of individual chord-splice slip values on both sides of the diaphragm, each multiplied by its distance to the nearest support.

TABLE 2305.2(1)
e_n VALUES (inches) FOR USE IN CALCULATING DIAPHRAGM AND SHEAR WALL DEFLECTION DUE TO FASTENER SLIP (Structural I)[a, c]

LOAD PER FASTENER[b] (pounds)	FASTENER DESIGNATIONS
	14-Ga staple x 2 inches long
60	0.011
80	0.018
100	0.028
120	0.04
140	0.053
160	0.068

For SI: 1 inch = 25.4 mm, 1 foot = 304.8 mm, 1 pound = 4.448 N.

a. Increase e_n values 20 percent for plywood grades other than Structural I.

b. Load per fastener = maximum shear per foot divided by the number of fasteners per foot at interior panel edges.

c. Decrease e_n values 50 percent for seasoned lumber (moisture content < 19 percent).

2305.3 Shear wall deflection. The deflection of wood-frame shear walls shall be determined in accordance with AWC SDPWS. The deflection (Δ) of a blocked wood structural panel shear wall uniformly fastened throughout with staples is permitted to be calculated in accordance with Equation 23-2.

$$\Delta = \frac{8vh^3}{EAb} + \frac{vh}{Gt} + 0.75he_n + d_a\frac{h}{b} \qquad \textbf{(Equation 23-2)}$$

$$\text{For SI: } \Delta = \frac{vh^3}{3EAb} + \frac{vh}{Gt} + \frac{he_n}{407.6} + d_a\frac{h}{b}$$

where:

A = Area of boundary element cross section in square inches (mm^2) (vertical member at shear wall boundary).

b = Wall width, in feet (mm).

d_a = Vertical elongation of overturning anchorage (including fastener slip, device elongation, anchor rod elongation, etc.) at the design shear load (v).

TABLE 2305.2(2)
VALUES OF *Gt* FOR USE IN CALCULATING DEFLECTION OF WOOD STRUCTURAL PANEL SHEAR WALLS AND DIAPHRAGMS

PANEL TYPE	SPAN RATING	VALUES OF *Gt* (lb/in. panel depth or width)							
		Other				Structural I			
		3-ply plywood	4-ply plywood	5-ply plywood[a]	OSB	3-ply plywood	4-ply plywood	5-ply plywood[a]	OSB
Sheathing	24/0	25,000	32,500	37,500	77,500	32,500	42,500	41,500	77,500
	24/16	27,000	35,000	40,500	83,500	35,000	45,500	44,500	83,500
	32/16	27,000	35,000	40,500	83,500	35,000	45,500	44,500	83,500
	40/20	28,500	37,000	43,000	88,500	37,000	48,000	47,500	88,500
	48/24	31,000	40,500	46,500	96,000	40,500	52,500	51,000	96,000
Single Floor	16 o.c.	27,000	35,000	40,500	83,500	35,000	45,500	44,500	83,500
	20 o.c.	28,000	36,500	42,000	87,000	36,500	47,500	46,000	87,000
	24 o.c.	30,000	39,000	45,000	93,000	39,000	50,500	49,500	93,000
	32 o.c.	36,000	47,000	54,000	110,000	47,000	61,000	59,500	110,000
	48 o.c.	50,500	65,500	76,000	155,000	65,500	85,000	83,500	155,000

		Other			Structural I		
	Thickness (in.)	A-A, A-C	Marine	All Other Grades	A-A, A-C	Marine	All Other Grades
Sanded Plywood	1/4	24,000	31,000	24,000	31,000	31,000	31,000
	11/32	25,500	33,000	25,500	33,000	33,000	33,000
	3/8	26,000	34,000	26,000	34,000	34,000	34,000
	15/32	38,000	49,500	38,000	49,500	49,500	49,500
	1/2	38,500	50,000	38,500	50,000	50,000	50,000
	19/32	49,000	63,500	49,000	63,500	63,500	63,500
	5/8	49,500	64,500	49,500	64,500	64,500	64,500
	23/32	50,500	65,500	50,500	65,500	65,500	65,500
	3/4	51,000	66,500	51,000	66,500	66,500	66,500
	7/8	52,500	68,500	52,500	68,500	68,500	68,500
	1	73,500	95,500	73,500	95,500	95,500	95,500
	1 1/8	75,000	97,500	75,000	97,500	97,500	97,500

For SI: 1 inch = 25.4 mm, 1 pound/inch = 0.1751 N/mm.

a. Applies to plywood with five or more layers; for five-ply/three-layer plywood, use values for four ply.

E = Elastic modulus of boundary element (vertical member at shear wall boundary), in pounds per square inch (N/mm^2).

e_n = Staple deformation, in inches (mm) [see Table 2305.2(1)].

G_t = Panel rigidity through the thickness, in pounds per inch (N/mm) of panel width or depth [see Table 2305.2(2)].

h = Wall height, in feet (mm).

v = Maximum shear due to design loads at the top of the wall, in pounds per linear foot (N/mm).

Δ = The calculated deflection, in inches (mm).

SECTION 2306
ALLOWABLE STRESS DESIGN

2306.1 Allowable stress design. The design and construction of wood elements in structures using *allowable stress design* shall be in accordance with the following applicable standards:

American Wood Council.

NDS	National Design Specification for Wood Construction
SDPWS	Special Design Provisions for Wind and Seismic

American Institute of Timber Construction.

AITC 104	Typical Construction Details
AITC 110	Standard Appearance Grades for Structural Glued Laminated Timber
AITC 113	Standard for Dimensions of Structural Glued Laminated Timber
AITC 117	Standard Specifications for Structural Glued Laminated Timber of Softwood Species
AITC 119	Standard Specifications for Structural Glued Laminated Timber of Hardwood Species
ANSI/AITC A190.1	Structural Glued Laminated Timber
AITC 200	Inspection Manual

American Society of Agricultural and Biological Engineers.

ASABE EP 484.2	Diaphragm Design of Metal-clad, Post-Frame Rectangular Buildings
ASABE EP 486.1	Shallow Post Foundation Design
ASABE 559	Design Requirements and Bending Properties for Mechanically Laminated Columns

APA—The Engineered Wood Association.

Panel Design Specification

Plywood Design Specification Supplement 1—
Design & Fabrication of Plywood Curved Panel

Plywood Design Specification Supplement 2—
Design & Fabrication of Glued Plywood-lumber Beams

Plywood Design Specification Supplement 3—
Design & Fabrication of Plywood Stressed-skin Panels

Plywood Design Specification Supplement 4—
Design & Fabrication of Plywood Sandwich Panels

Plywood Design Specification Supplement 5—
Design & Fabrication of All-plywood Beams

EWS T300	Glulam Connection Details
EWS S560	Field Notching and Drilling of Glued Laminated Timber Beams
EWS S475	Glued Laminated Beam Design Tables
EWS X450	Glulam in Residential Construction
EWS X440	Product and Application Guide: Glulam
EWS R540	Builders Tips: Proper Storage and Handling of Glulam Beams

Truss Plate Institute, Inc.

TPI 1	National Design Standard for Metal Plate Connected Wood Truss Construction

2306.1.1 Joists and rafters. The design of rafter spans is permitted to be in accordance with the AWC STJR.

2306.1.2 Plank and beam flooring. The design of plank and beam flooring is permitted to be in accordance with the AWC *Wood Construction Data No. 4*.

2306.1.3 Treated wood stress adjustments. The allowable unit stresses for *preservative-treated wood* need no adjustment for treatment, but are subject to other adjustments.

The allowable unit stresses for *fire-retardant-treated wood*, including fastener values, shall be developed from an *approved* method of investigation that considers the effects of anticipated temperature and humidity to which the *fire-retardant-treated wood* will be subjected, the type of treatment and the redrying process. Other adjustments are applicable except that the impact load duration shall not apply.

2306.1.4 Lumber decking. The capacity of lumber decking arranged according to the patterns described in Section 2304.9.2 shall be the lesser of the capacities determined for flexure and deflection according to the formulas in Table 2306.1.4.

2306.2 Wood-frame diaphragms. Wood-frame diaphragms shall be designed and constructed in accordance with AWC SDPWS. Where panels are fastened to framing members with staples, requirements and limitations of AWC SDPWS shall be met and the allowable shear values set forth in Table 2306.2(1) or 2306.2(2) shall be permitted. The allowable shear values in Tables 2306.2(1) and 2306.2(2) are permitted to be increased 40 percent for wind design.

2306.2.1 Gypsum board diaphragm ceilings. Gypsum board diaphragm ceilings shall be in accordance with Section 2508.5.

2306.3 Wood-frame shear walls. Wood-frame shear walls shall be designed and constructed in accordance with AWC SDPWS. Where panels are fastened to framing members with

TABLE 2306.1.4
ALLOWABLE LOADS FOR LUMBER DECKING

PATTERN	ALLOWABLE AREA LOAD[a, b]	
	Flexure	Deflection
Simple span	$\sigma_b = \frac{8F_b'd^2}{l^2 6}$	$\sigma_\Delta = \frac{384\Delta E'}{5l^4}\frac{d^3}{12}$
Two-span continuous	$\sigma_b = \frac{8F_b'd^2}{l^2 6}$	$\sigma_\Delta = \frac{185\Delta E'}{l^4}\frac{d^3}{12}$
Combination simple- and two-span continuous	$\sigma_b = \frac{8F_b'd^2}{l^2 6}$	$\sigma_\Delta = \frac{131\Delta E'}{l^4}\frac{d^3}{12}$
Cantilevered pieces intermixed	$\sigma_b = \frac{20F_b'd^2}{3l^2 6}$	$\sigma_\Delta = \frac{105\Delta E'}{l^4}\frac{d^3}{12}$
Controlled random layup		
Mechanically laminated decking	$\sigma_b = \frac{20F_b'd^2}{3l^2 6}$	$\sigma_\Delta = \frac{100\Delta E'}{l^4}\frac{d^3}{12}$
2-inch decking	$\sigma_b = \frac{20F_b'd^2}{3l^2 6}$	$\sigma_\Delta = \frac{100\Delta E'}{l^4}\frac{d^3}{12}$
3-inch and 4-inch decking	$\sigma_b = \frac{20F_b'd^2}{3l^2 6}$	$\sigma_\Delta = \frac{116\Delta E'}{l^4}\frac{d^3}{12}$

For SI: 1 inch = 25.4 mm.

a. σ_b = Allowable total uniform load limited by bending.
σ_Δ = Allowable total uniform load limited by deflection.

b. d = Actual decking thickness.
l = Span of decking.
F_b' = Allowable bending stress adjusted by applicable factors.
E' = Modulus of elasticity adjusted by applicable factors.

staples, requirements and limitations of AWC SDPWS shall be met and the allowable shear values set forth in Table 2306.3(1), 2306.3(2) or 2306.3(3) shall be permitted. The allowable shear values in Tables 2306.3(1) and 2306.3(2) are permitted to be increased 40 percent for wind design. Panels complying with ANSI/APA PRP-210 shall be permitted to use design values for Plywood Siding in the AWC SDPWS.

SECTION 2307
LOAD AND RESISTANCE FACTOR DESIGN

2307.1 Load and resistance factor design. The design and construction of wood elements and structures using *load and resistance factor design* shall be in accordance with AWC NDS and AWC SDPWS.

SECTION 2308
CONVENTIONAL LIGHT-FRAME CONSTRUCTION

2308.1 General. The requirements of this section are intended for *conventional light-frame construction.* Other construction methods are permitted to be used, provided a satisfactory design is submitted showing compliance with other provisions of this code. Interior nonload-bearing partitions, ceilings and curtain walls of *conventional light-frame construction* are not subject to the limitations of Section 2308.2. Detached one- and two-family dwellings and multiple single-family dwellings (townhouses) not more than three *stories above grade plane* in height with a separate means of egress and their accessory structures shall comply with the *International Residential Code.*

2308.1.1 Portions exceeding limitations of conventional light-frame construction. When portions of a building of otherwise *conventional light-frame construction* exceed the limits of Section 2308.2, those portions and the supporting load path shall be designed in accordance with accepted engineering practice and the provisions of this code. For the purposes of this section, the term "portions" shall mean parts of buildings containing volume and area such as a room or a series of rooms. The extent of such design need only demonstrate compliance of the nonconventional light-framed elements with other applicable provisions of this code and shall be compatible with the performance of the conventional light-framed system.

2308.1.2 Connections and fasteners. Connectors and fasteners used in conventional construction shall comply with the requirements of Section 2304.10.

2308.2 Limitations. Buildings are permitted to be constructed in accordance with the provisions of *conventional light-frame construction,* subject to the limitations in Sections 2308.2.1 through 2308.2.6.

2308.2.1 Stories. Structures of *conventional light-frame construction* shall be limited in *story* height in accordance with Table 2308.2.1.

TABLE 2308.2.1
ALLOWABLE STORY HEIGHT

SEISMIC DESIGN CATEGORY	ALLOWABLE STORY ABOVE GRADE PLANE
A and B	Three stories
C	Two stories
D and E[a]	One story

For SI: 1 inch = 25.4 mm.

a. For the purposes of this section, for buildings assigned to *Seismic Design Category* D or E, cripple walls shall be considered to be a *story* unless cripple walls are solid blocked and do not exceed 14 inches in height.

2308.2.2 Allowable floor-to-floor height. Maximum floor-to-floor height shall not exceed 11 feet, 7 inches (3531 mm). Exterior bearing wall and interior braced wall

TABLE 2306.2(1)
ALLOWABLE SHEAR VALUES (POUNDS PER FOOT) FOR WOOD STRUCTURAL PANEL DIAPHRAGMS UTILIZING STAPLES WITH FRAMING OF DOUGLAS FIR-LARCH, OR SOUTHERN PINE[a] FOR WIND OR SEISMIC LOADING[f]

PANEL GRADE	STAPLE LENGTH AND GAGE[d]	MINIMUM FASTENER PENETRATION IN FRAMING (inches)	MINIMUM NOMINAL PANEL THICKNESS (inch)	MINIMUM NOMINAL WIDTH OF FRAMING MEMBERS AT ADJOINING PANEL EDGES AND BOUNDARIES[e] (inches)	BLOCKED DIAPHRAGMS				UNBLOCKED DIAPHRAGMS	
					Fastener spacing (inches) at diaphragm boundaries (all cases) at continuous panel edges parallel to load (Cases 3, 4), and at all panel edges (Cases 5, 6)[b]				Fasteners spaced 6 max. at supported edges[b]	
					6	4	$2^1/_2$[c]	2[c]	Case 1 (No unblocked edges or continuous joints parallel to load)	All other configurations (Cases 2, 3, 4, 5 and 6)
					Fastener spacing (inches) at other panel edges (Cases 1, 2, 3 and 4)[b]					
					6	6	4	3		
Structural I grades	$1^1/_2$ 16 gage	1	$^3/_8$	2	175	235	350	400	155	115
				3	200	265	395	450	175	130
			$^{15}/_{32}$	2	175	235	350	400	155	120
				3	200	265	395	450	175	130
Sheathing, single floor and other grades covered in DOC PS 1 and PS 2	$1^1/_2$ 16 gage	1	$^3/_8$	2	160	210	315	360	140	105
				3	180	235	355	400	160	120
			$^7/_{16}$	2	165	225	335	380	150	110
				3	190	250	375	425	165	125
			$^{15}/_{32}$	2	160	210	315	360	140	105
				3	180	235	355	405	160	120
			$^{19}/_{32}$	2	175	235	350	400	155	115
				3	200	265	395	450	175	130

(continued)

TABLE 2306.2(1)—continued
ALLOWABLE SHEAR VALUES (POUNDS PER FOOT) FOR WOOD STRUCTURAL PANEL DIAPHRAGMS UTILIZING STAPLES WITH FRAMING OF DOUGLAS FIR-LARCH, OR SOUTHERN PINE[a] FOR WIND OR SEISMIC LOADING[f]

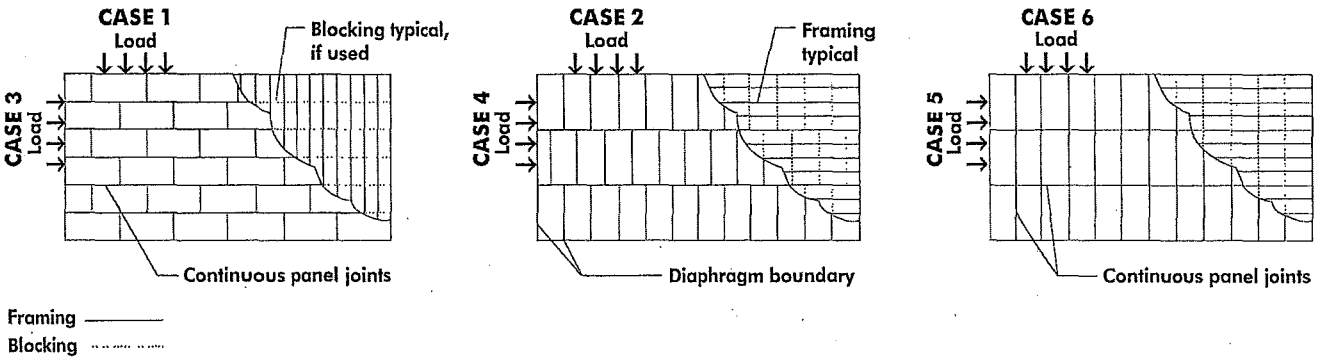

For SI: 1 inch = 25.4 mm, 1 pound per foot = 14.5939 N/m.

a. For framing of other species: (1) Find specific gravity for species of lumber in AF&PA NDS. (2) For staples find shear value from table above for Structural I panels (regardless of actual grade) and multiply value by 0.82 for species with specific gravity of 0.42 or greater, or 0.65 for all other species.

b. Space fasteners maximum 12 inches on center along intermediate framing members (6 inches on center where supports are spaced 48 inches on center).

c. Framing at adjoining panel edges shall be 3 inches nominal or wider.

d. Staples shall have a minimum crown width of $^{7}/_{16}$ inch and shall be installed with their crowns parallel to the long dimension of the framing members.

e. The minimum nominal width of framing members not located at boundaries or adjoining panel edges shall be 2 inches.

f. For shear loads of normal or permanent load duration as defined by the AF&PA NDS, the values in the table above shall be multiplied by 0.63 or 0.56, respectively.

TABLE 2306.2(2)
ALLOWABLE SHEAR VALUES (POUNDS PER FOOT) FOR WOOD STRUCTURAL PANEL BLOCKED DIAPHRAGMS UTILIZING MULTIPLE ROWS OF STAPLES (HIGH-LOAD DIAPHRAGMS) WITH FRAMING OF DOUGLAS FIR-LARCH OR SOUTHERN PINE[a] FOR WIND OR SEISMIC LOADING[b, g, h]

PANEL GRADE[c]	STAPLE GAGE[f]	MINIMUM FASTENER PENETRATION IN FRAMING (inches)	MINIMUM NOMINAL PANEL THICKNESS (inch)	MINIMUM NOMINAL WIDTH OF FRAMING MEMBER AT ADJOINING PANEL EDGES AND BOUNDARIES[e]	LINES OF FASTENERS	BLOCKED DIAPHRAGMS					
						Cases 1 and 2[d]					
						Fastener Spacing Per Line at Boundaries (inches)					
						4		$2^1/_2$		2	
						Fastener Spacing Per Line at Other Panel Edges (inches)					
						6	4	4	3	3	2
Structural I grades	14 gage staples	2	$^{15}/_{32}$	3	2	600	600	860	960	1,060	1,200
				4	3	860	900	1,160	1,295	1,295	1,400
			$^{19}/_{32}$	3	2	600	600	875	960	1,075	1,200
				4	3	875	900	1,175	1,440	1,475	1,795
Sheathing single floor and other grades covered in DOC PS 1 and PS 2	14 gage staples	2	$^{15}/_{32}$	3	2	540	540	735	865	915	1,080
				4	3	735	810	1,005	1,105	1,105	1,195
			$^{19}/_{32}$	3	2	600	600	865	960	1,065	1,200
				4	3	865	900	1,130	1,430	1,370	1,485
			$^{23}/_{32}$	4	3	865	900	1,130	1,490	1,430	1,545

For SI: 1 inch = 25.4 mm, 1 pound per foot = 14.5939 N/m.

a. For framing of other species: (1) Find specific gravity for species of framing lumber in AF&PA NDS. (2) For staples, find shear value from table above for Structural I panels (regardless of actual grade) and multiply value by 0.82 for species with specific gravity of 0.42 or greater, or 0.65 for all other species.

b. Fastening along intermediate framing members: Space fasteners a maximum of 12 inches on center, except 6 inches on center for spans greater than 32 inches.

c. Panels conforming to PS 1 or PS 2.

d. This table gives shear values for Cases 1 and 2 as shown in Table 2306.2(1). The values shown are applicable to Cases 3, 4, 5 and 6 as shown in Table 2306.2(1), providing fasteners at all continuous panel edges are spaced in accordance with the boundary fastener spacing.

e. The minimum nominal depth of framing members shall be 3 inches nominal. The minimum nominal width of framing members not located at boundaries or adjoining panel edges shall be 2 inches.

f. Staples shall have a minimum crown width of $^7/_{16}$ inch, and shall be installed with their crowns parallel to the long dimension of the framing members.

g. High-load diaphragms shall be subject to special inspection in accordance with Section 1705.5.1.

h. For shear loads of normal or permanent load duration as defined by the AF&PA NDS, the values in the table above shall be multiplied by 0.63 or 0.56, respectively.

(continued)

TABLE 2306.2(2)—continued
ALLOWABLE SHEAR VALUES (POUNDS PER FOOT) FOR WOOD STRUCTURAL PANEL BLOCKED DIAPHRAGMS UTILIZING MULTIPLE ROWS OF STAPLES (HIGH-LOAD DIAPHRAGMS) WITH FRAMING OF DOUGLAS FIR-LARCH OR SOUTHERN PINE FOR WIND OR SEISMIC LOADING

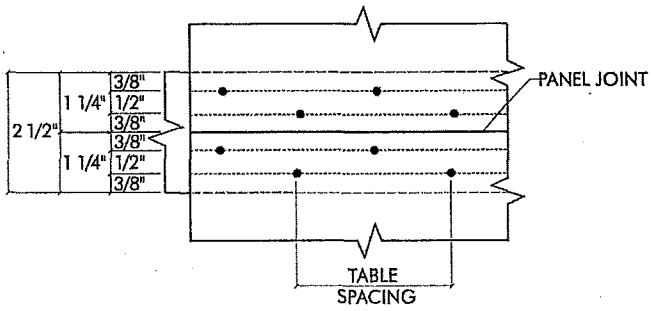

3" NOMINAL—TWO LINES

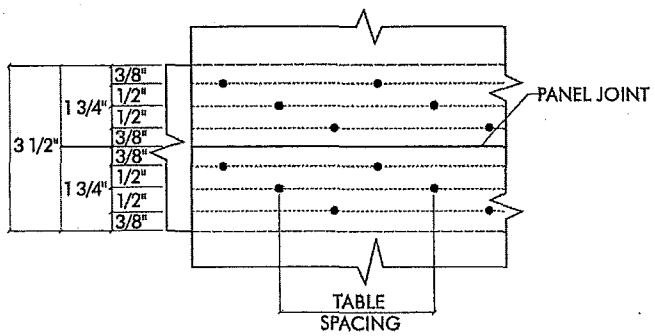

4" NOMINAL—THREE LINES

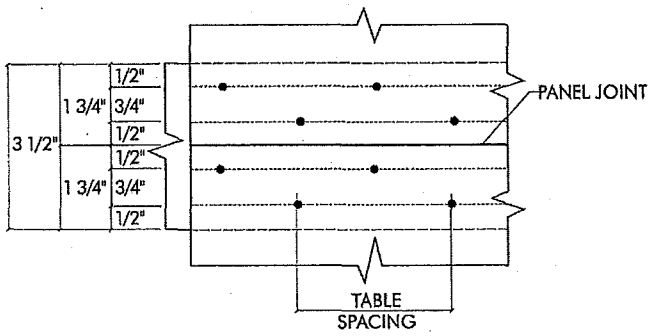

4" NOMINAL—TWO LINES

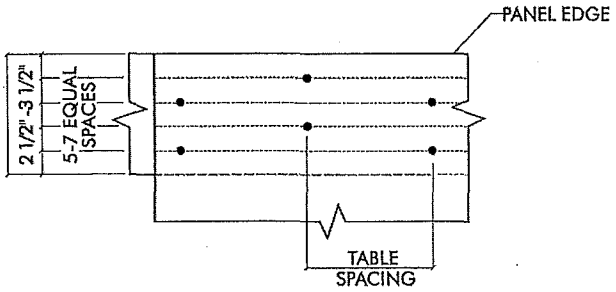

TYPICAL BOUNDARY FASTENING
(Shown is two lines staggered.)

NOTE: SPACE PANEL END AND EDGE JOINT 1/8 INCH. REDUCE SPACING BETWEEN LINES OF NAILS AS NECESSARY TO MAINTAIN MINIMUM 3/8 INCH FASTERNER EDGE MARGINS, MINIMUM SPACING BETWEEN LINES IS 3/8 INCH

TABLE 2306.3(1)
ALLOWABLE SHEAR VALUES (POUNDS PER FOOT) FOR WOOD STRUCTURAL PANEL SHEAR WALLS UTILIZING STAPLES WITH FRAMING OF DOUGLAS FIR-LARCH OR SOUTHERN PINE[a] FOR WIND OR SEISMIC LOADING[b, f, g, i]

PANEL GRADE	MINIMUM NOMINAL PANEL THICKNESS (inch)	MINIMUM FASTENER PENETRATION IN FRAMING (inches)	PANELS APPLIED DIRECT TO FRAMING					PANELS APPLIED OVER $^1/_2$" OR $^5/_8$" GYPSUM SHEATHING				
			Staple size[h]	Fastener spacing at panel edges (inches)				Staple size[h]	Fastener spacing at panel edges (inches)			
				6	4	3	2[d]		6	4	3	2[d]
Structural I sheathing	$^3/_8$	1	$1^1/_2$ 16 Gage	155	235	315	400	2 16 Gage	155	235	310	400
	$^7/_{16}$			170	260	345	440		155	235	310	400
	$^{15}/_{32}$			185	280	375	475		155	235	300	400
Sheathing, plywood siding[e] except Group 5 Species, ANSI/APA PRP 210 siding	$^5/_{16}$[c] or $^1/_4$[c]	1	$1^1/_2$ 16 Gage	145	220	295	375	2 16 Gage	110	165	220	285
	$^3/_8$			140	210	280	360		140	210	280	360
	$^7/_{16}$			155	230	310	395		140	210	280	360
	$^{15}/_{32}$			170	255	335	430		140	210	280	360
	$^{19}/_{32}$		$1^3/_4$ 16 Gage	185	280	375	475	—	—	—	—	—

For SI: 1 inch = 25.4 mm, 1 pound per foot = 14.5939 N/m.

a. For framing of other species: (1) Find specific gravity for species of lumber in AF&PA NDS. (2) For staples find shear value from table above for Structural I panels (regardless of actual grade) and multiply value by 0.82 for species with specific gravity of 0.42 or greater, or 0.65 for all other species.

b. Panel edges backed with 2-inch nominal or wider framing. Install panels either horizontally or vertically. Space fasteners maximum 6 inches on center along intermediate framing members for $^3/_8$-inch and $^7/_{16}$-inch panels installed on studs spaced 24 inches on center. For other conditions and panel thickness, space fasteners maximum 12 inches on center on intermediate supports.

c. $^3/_8$-inch panel thickness or siding with a span rating of 16 inches on center is the minimum recommended where applied directly to framing as exterior siding. For grooved panel siding, the nominal panel thickness is the thickness of the panel measured at the point of fastening.

d. Framing at adjoining panel edges shall be 3 inches nominal or wider.

e. Values apply to all-veneer plywood. Thickness at point of fastening on panel edges governs shear values.

f. Where panels are applied on both faces of a wall and fastener spacing is less than 6 inches on center on either side, panel joints shall be offset to fall on different framing members, or framing shall be 3 inches nominal or thicker at adjoining panel edges.

g. In Seismic Design Category D, E or F, where shear design values exceed 350 pounds per linear foot, all framing members receiving edge fastening from abutting panels shall be not less than a single 3-inch nominal member, or two 2-inch nominal members fastened together in accordance with Section 2306.1 to transfer the design shear value between framing members. Wood structural panel joint and sill plate nailing shall be staggered at all panel edges. See AF&PA SDPWS for sill plate size and anchorage requirements.

h. Staples shall have a minimum crown width of $^7/_{16}$ inch and shall be installed with their crowns parallel to the long dimension of the framing members.

i. For shear loads of normal or permanent load duration as defined by the AF&PA NDS, the values in the table above shall be multiplied by 0.63 or 0.56, respectively.

TABLE 2306.3(2)
ALLOWABLE SHEAR VALUES (plf) FOR WIND OR SEISMIC LOADING ON SHEAR WALLS OF FIBERBOARD SHEATHING BOARD CONSTRUCTION UTILIZING STAPLES FOR TYPE V CONSTRUCTION ONLY[a, b, c, d, e]

THICKNESS AND GRADE	FASTENER SIZE	ALLOWABLE SHEAR VALUE (pounds per linear foot) STAPLE SPACING AT PANEL EDGES (inches)[a]		
		4	3	2
$^1/_2$" or $^{25}/_{32}$" Structural	No. 11 gage galvanized staple, $^7/_{16}$" crown[f]	150	200	225
	No. 11 gage galvanized staple, 1" crown[f]	220	290	325

For SI: 1 inch = 25.4 mm, 1 pound per foot = 14.5939 N/m.

a. Fiberboard sheathing shall not be used to brace concrete or masonry walls.

b. Panel edges shall be backed with 2-inch or wider framing of Douglas Fir-larch or Southern Pine. For framing of other species: (1) Find specific gravity for species of framing lumber in AF&PA NDS. (2) For staples, multiply the shear value from the table above by 0.82 for species with specific gravity of 0.42 or greater, or 0.65 for all other species.

c. Values shown are for fiberboard sheathing on one side only with long panel dimension either parallel or perpendicular to studs.

d. Fastener shall be spaced 6 inches on center along intermediate framing members.

e. Values are not permitted in Seismic Design Category D, E or F.

f. Staple length shall be not less than $1^1/_2$ inches for $^{25}/_{32}$-inch sheathing or $1^1/_4$ inches for $^1/_2$-inch sheathing.

TABLE 2306.3(3)
ALLOWABLE SHEAR VALUES FOR WIND OR SEISMIC FORCES FOR SHEAR WALLS OF LATH AND PLASTER OR GYPSUM BOARD WOOD FRAMED WALL ASSEMBLIES UTILIZING STAPLES

TYPE OF MATERIAL	THICKNESS OF MATERIAL	WALL CONSTRUCTION	STAPLE SPACING[b] MAXIMUM (inches)	SHEAR VALUE[a, c] (plf)	MINIMUM STAPLE SIZE [f, g]
1. Expanded metal or woven wire lath and Portland cement plaster	$^7/_8$"	Unblocked	6	180	No. 16 gage galv. staple, $^7/_8$" legs
2. Gypsum lath, plain or perforated	$^3/_8$" lath and $^1/_2$" plaster	Unblocked	5	100	No. 16 gage galv. staple, $1^1/_8$" long
3. Gypsum sheating	$^1/_2$" × 2′ × 8′	Unblocked	4	75	No. 16 gage galv. staple, $1^3/_4$" long
	$^1/_2$" × 4′	Blocked[d]	4	175	
		Unblocked	7	100	
4. Gypsum board, gypsum veneer base or water-resistant gypsum backing board	$^1/_2$"	Unblocked[d]	7	75	No. 16 gage galv. staple, $1^1/_2$" long
		Unblocked[d]	4	110	
		Unblocked	7	100	
		Unblocked	4	125	
		Blocked[e]	7	125	
		Blocked[e]	4	150	
	$^5/_8$"	Unblocked[d]	7	115	No. 16 gage galv. staple, $1^1/_2$" legs, $1^5/_8$" long
			4	145	
		Blocked[e]	7	145	
			4	175	
		Blocked[e] Two-ply	Base ply: 9 Face ply: 7	250	No. 16 gage galv. staple $1^5/_8$" long No. 15 gage galv. staple, $2^1/_4$" long

For SI: 1 inch = 25.4 mm, 1 foot = 304.8 mm, 1 pound per foot = 14.5939 N/m.

a. These shear walls shall not be used to resist loads imposed by masonry or concrete walls (see AF & PA SDPWS). Values shown are for short-term loading due to wind or seismic loading. Walls resisting seismic loads shall be subject to the limitations in Section 12.2.1 of ASCE 7. Values shown shall be reduced 25 percent for normal loading.

b. Applies to fastening at studs, top and bottom plates and blocking.

c. Except as noted, shear values are based on a maximum framing spacing of 16 inches on center.

d. Maximum framing spacing of 24 inches on center.

e. All edges are blocked, and edge fastening is provided at all supports and all panel edges.

f. Staples shall have a minimum crown width of $^7/_{16}$ inch, measured outside the legs, and shall be installed with their crowns parallel to the long dimension of the framing members.

g. Staples for the attachment of gypsum lath and woven-wire lath shall have a minimum crown width of $^3/_4$ inch, measured outside the legs.

heights shall not exceed a stud height of 10 feet (3048 mm).

2308.2.3 Allowable loads. Loads shall be in accordance with Chapter 16 and shall not exceed the following:

1. Average dead loads shall not exceed 15 psf (718 N/m^2) for combined roof and ceiling, exterior walls, floors and partitions.

   Exceptions:

   1. Subject to the limitations of Section 2308.6.10, stone or masonry veneer up to the lesser of 5 inches (127 mm) thick or 50 psf (2395 N/m^2) and installed in accordance with Chapter 14 is permitted to a height of 30 feet (9144 mm) above a noncombustible foundation, with an additional 8 feet (2438 mm) permitted for gable ends.
   2. Concrete or masonry fireplaces, heaters and chimneys shall be permitted in accordance with the provisions of this code.

2. Live loads shall not exceed 40 psf (1916 N/m^2) for floors.

3. Ground snow loads shall not exceed 50 psf (2395 N/m^2).

2308.2.4 Ultimate wind speed. V_{ult} shall not exceed 130 miles per hour (57 m/s) (3-second gust).

Exceptions:

1. V_{ult} shall not exceed 140 mph (61.6 m/s) (3-second gust) for buildings in Exposure Category B that are not located in a *hurricane-prone region.*
2. Where V_{ult} exceeds 130 mph (3-second gust), the provisions of either AWC WFCM or ICC 600 are permitted to be used.

2308.2.5 Allowable roof span. Ceiling joist and rafter framing constructed in accordance with Section 2308.7

and trusses shall not span more than 40 feet (12 192 mm) between points of vertical support. A ridge board in accordance with Section 2308.7 or 2308.7.3.1 shall not be considered a vertical support.

2308.2.6 Risk category limitation. The use of the provisions for *conventional light-frame construction* in this section shall not be permitted for *Risk Category* IV buildings assigned to *Seismic Design Category* B, C, D or E.

2308.3 Foundations and footings. Foundations and footings shall be designed and constructed in accordance with Chapter 18. Connections to foundations and footings shall comply with this section.

2308.3.1 Foundation plates or sills. Foundation plates or sills resting on concrete or masonry foundations shall comply with Section 2304.3.1. Foundation plates or sills shall be bolted or anchored to the foundation with not less than $^1/_2$-inch-diameter (12.7 mm) steel bolts or *approved* anchors spaced to provide equivalent anchorage as the steel bolts. Bolts shall be embedded at least 7 inches (178 mm) into concrete or masonry. Bolts shall be spaced not more than 6 feet (1829 mm) on center and there shall be not less than two bolts or anchor straps per piece with one bolt or anchor strap located not more than 12 inches (305 mm) or less than 4 inches (102 mm) from each end of each piece. A properly sized nut and washer shall be tightened on each bolt to the plate.

Exceptions:

1. Along *braced wall lines* in structures assigned to *Seismic Design Category* E, steel bolts with a minimum nominal diameter of $^5/_8$ inch (15.9 mm) or approved anchor straps load-rated in accordance with Section 2304.10.3 and spaced to provide equivalent anchorage shall be used.
2. Bolts in *braced wall lines* in structures over two stories above grade shall be spaced not more than 4 feet (1219 mm) on center.

2308.3.2 Braced wall line sill plate anchorage in Seismic Design Categories D and E. Sill plates along *braced wall lines* in buildings assigned to *Seismic Design Category* D or E shall be anchored with anchor bolts with steel plate washers between the foundation sill plate and the nut, or approved anchor straps load-rated in accordance with Section 2304.10.3. Such washers shall be a minimum of 0.229 inch by 3 inches by 3 inches (5.82 mm by 76 mm by 76 mm) in size. The hole in the plate washer is permitted to be diagonally slotted with a width of up to $^3/_{16}$ inch (4.76 mm) larger than the bolt diameter and a slot length not to exceed $1^3/_4$ inches (44 mm), provided a standard cut washer is placed between the plate washer and the nut.

2308.4 Floor framing. Floor framing shall comply with this section.

2308.4.1 Girders. Girders for single-story construction or girders supporting loads from a single floor shall be not less than 4 inches by 6 inches (102 mm by 152 mm) for spans 6 feet (1829 mm) or less, provided that girders are spaced not more than 8 feet (2438 mm) on center. Other girders shall be designed to support the loads specified in this code. Girder end joints shall occur over supports.

Where a girder is spliced over a support, an adequate tie shall be provided. The ends of beams or girders supported on masonry or concrete shall not have less than 3 inches (76 mm) of bearing.

2308.4.1.1 Allowable girder spans. The allowable spans of girders that are fabricated of dimension lumber shall not exceed the values set forth in Table 2308.4.1.1(1) or 2308.4.1.1(2).

2308.4.2 Floor joists. Floor joists shall comply with this section.

2308.4.2.1 Span. Spans for floor joists shall be in accordance with Table 2308.4.2.1(1) or 2308.4.2.1(2) or the AWC STJR.

2308.4.2.2 Bearing. The ends of each joist shall have not less than $1^1/_2$ inches (38 mm) of bearing on wood or metal, or not less than 3 inches (76 mm) on masonry, except where supported on a 1-inch by 4-inch (25 mm by 102 mm) ribbon strip and nailed to the adjoining stud.

2308.4.2.3 Framing details. Joists shall be supported laterally at the ends and at each support by solid blocking except where the ends of the joists are nailed to a header, band or rim joist or to an adjoining stud or by other means. Solid blocking shall be not less than 2 inches (51 mm) in thickness and the full depth of the joist. Joist framing from opposite sides of a beam, girder or partition shall be lapped at least 3 inches (76 mm) or the opposing joists shall be tied together in an approved manner. Joists framing into the side of a wood girder shall be supported by framing anchors or on ledger strips not less than 2 inches by 2 inches (51 mm by 51 mm).

2308.4.2.4 Notches and holes. Notches on the ends of joists shall not exceed one-fourth the joist depth. Notches in the top or bottom of joists shall not exceed one-sixth the depth and shall not be located in the middle third of the span. Holes bored in joists shall not be within 2 inches (51 mm) of the top or bottom of the joist and the diameter of any such hole shall not exceed one-third the depth of the joist.

2308.4.3 Engineered wood products. Engineered wood products shall be installed in accordance with manufacturer's recommendations. Cuts, notches and holes bored in trusses, structural composite lumber, structural glued-laminated members or I-joists are not permitted except where permitted by the manufacturer's recommendations or where the effects of such alterations are specifically considered in the design of the member by a *registered design professional.*

TABLE 2308.4.1.1(1)
HEADER AND GIRDER SPANS[a, b] FOR EXTERIOR BEARING WALLS
(Maximum spans for Douglas Fir-Larch, Hem-Fir, Southern Pine and Spruce-Pine-Fir[b] and required number of jack studs)

GIRDERS AND HEADERS SUPPORTING	SIZE	GROUND SNOW LOAD (psf)[e]											
		30						50					
		Building width[c] (feet)											
		20		28		36		20		28		36	
		Span	NJ[d]	Span	NJ[d]	Span	NJ[d]	Span	NJ[d]	Span	NJ[d]	Span	NJ[d]
Roof and ceiling	2-2 × 4	3-6	1	3-2	1	2-10	1	3-2	1	2-9	1	2-6	1
	2-2 × 6	5-5	1	4-8	1	4-2	1	4-8	1	4-1	1	3-8	2
	2-2 × 8	6-10	1	5-11	2	5-4	2	5-11	2	5-2	2	4-7	2
	2-2 × 10	8-5	2	7-3	2	6-6	2	7-3	2	6-3	2	5-7	2
	2-2 × 12	9-9	2	8-5	2	7-6	2	8-5	2	7-3	2	6-6	2
	3-2 × 8	8-4	1	7-5	1	6-8	1	7-5	1	6-5	2	5-9	2
	3-2 × 10	10-6	1	9-1	2	8-2	2	9-1	2	7-10	2	7-0	2
	3-2 × 12	12-2	2	10-7	2	9-5	2	10-7	2	9-2	2	8-2	2
	4-2 × 8	9-2	1	8-4	1	7-8	1	8-4	1	7-5	1	6-8	1
	4-2 × 10	11-8	1	10-6	1	9-5	2	10-6	1	9-1	2	8-2	2
	4-2 × 12	14-1	1	12-2	2	10-11	2	12-2	2	10-7	2	9-5	2
Roof, ceiling and one center-bearing floor	2-2 × 4	3-1	1	2-9	1	2-5	1	2-9	1	2-5	1	2-2	1
	2-2 × 6	4-6	1	4-0	1	3-7	2	4-1	1	3-7	2	3-3	2
	2-2 × 8	5-9	2	5-0	2	4-6	2	5-2	2	4-6	2	4-1	2
	2-2 × 10	7-0	2	6-2	2	5-6	2	6-4	2	5-6	2	5-0	2
	2-2 × 12	8-1	2	7-1	2	6-5	2	7-4	2	6-5	2	5-9	3
	3-2 × 8	7-2	1	6-3	2	5-8	2	6-5	2	5-8	2	5-1	2
	3-2 × 10	8-9	2	7-8	2	6-11	2	7-11	2	6-11	2	6-3	2
	3-2 × 12	10-2	2	8-11	2	8-0	2	9-2	2	8-0	2	7-3	2
	4-2 × 8	8-1	1	7-3	1	6-7	1	7-5	1	6-6	1	5-11	2
	4-2 × 10	10-1	1	8-10	2	8-0	2	9-1	2	8-0	2	7-2	2
	4-2 × 12	11-9	2	10-3	2	9-3	2	10-7	2	9-3	2	8-4	2
Roof, ceiling and one clear span floor	2-2 × 4	2-8	1	2-4	1	2-1	1	2-7	1	2-3	1	2-0	1
	2-2 × 6	3-11	1	3-5	2	3-0	2	3-10	2	3-4	2	3-0	2
	2-2 × 8	5-0	2	4-4	2	3-10	2	4-10	2	4-2	2	3-9	2
	2-2 × 10	6-1	2	5-3	2	4-8	2	5-11	2	5-1	2	4-7	3
	2-2 × 12	7-1	2	6-1	3	5-5	3	6-10	2	5-11	3	5-4	3
	3-2 × 8	6-3	2	5-5	2	4-10	2	6-1	2	5-3	2	4-8	2
	3-2 × 10	7-7	2	6-7	2	5-11	2	7-5	2	6-5	2	5-9	2
	3-2 × 12	8-10	2	7-8	2	6-10	2	8-7	2	7-5	2	6-8	2
	4-2 × 8	7-2	1	6-3	2	5-7	2	7-0	1	6-1	2	5-5	2
	4-2 × 10	8-9	2	7-7	2	6-10	2	8-7	2	7-5	2	6-7	2
	4-2 × 12	10-2	2	8-10	2	7-11	2	9-11	2	8-7	2	7-8	2
Roof, ceiling and two center-bearing floors	2-2 × 4	2-7	1	2-3	1	2-0	1	2-6	1	2-2	1	1-11	1
	2-2 × 6	3-9	2	3-3	2	2-11	2	3-8	2	3-2	2	2-10	2
	2-2 × 8	4-9	2	4-2	2	3-9	2	4-7	2	4-0	2	3-8	2
	2-2 × 10	5-9	2	5-1	2	4-7	3	5-8	2	4-11	2	4-5	3
	2-2 × 12	6-8	2	5-10	3	5-3	3	6-6	2	5-9	3	5-2	3
	3-2 × 8	5-11	2	5-2	2	4-8	2	5-9	2	5-1	2	4-7	2
	3-2 × 10	7-3	2	6-4	2	5-8	2	7-1	2	6-2	2	5-7	2
	3-2 × 12	8-5	2	7-4	2	6-7	2	8-2	2	7-2	2	6-5	3
	4-2 × 8	6-10	1	6-0	2	5-5	2	6-8	1	5-10	2	5-3	2
	4-2 × 10	8-4	2	7-4	2	6-7	2	8-2	2	7-2	2	6-5	2
	4-2 × 12	9-8	2	8-6	2	7-8	2	9-5	2	8-3	2	7-5	2
Roof, ceiling, and two clear span floors	2-2 × 4	2-1	1	1-8	1	1-6	2	2-0	1	1-8	1	1-5	2
	2-2 × 6	3-1	2	2-8	2	2-4	2	3-0	2	2-7	2	2-3	2
	2-2 × 8	3-10	2	3-4	2	3-0	3	3-10	2	3-4	2	2-11	3

(continued)

TABLE 2308.4.1.1(1)—continued
HEADER AND GIRDER SPANS[a, b] FOR EXTERIOR BEARING WALLS
(Maximum spans for Douglas Fir-Larch, Hem-Fir, Southern Pine and Spruce-Pine-Fir[b] and required number of jack studs)

GIRDERS AND HEADERS SUPPORTING	SIZE	GROUND SNOW LOAD (psf)[e]											
		30						50					
		Building width[c] (feet)											
		20		28		36		20		28		36	
		Span	NJ[d]	Span	NJ[d]	Span	NJ[d]	Span	NJ[d]	Span	NJ[d]	Span	NJ[d]
Roof, ceiling, and two clear span floors	2-2 x 10	4-9	2	4-1	3	3-8	3	4-8	2	4-0	3	3-7	3
	2-2 x 12	5-6	3	4-9	3	4-3	3	5-5	3	4-8	3	4-2	3
	3-2 x 8	4-10	2	4-2	2	3-9	2	4-9	2	4-1	2	3-8	2
	3-2 x 10	5-11	2	5-1	2	4-7	3	5-10	2	5-0	2	4-6	3
	3-2 x 12	6-10	2	5-11	3	5-4	3	6-9	2	5-10	3	5-3	3
	4-2 x 8	5-7	2	4-10	2	4-4	2	5-6	2	4-9	2	4-3	2
	4-2 x 10	6-10	2	5-11	2	5-3	2	6-9	2	5-10	2	5-2	2
	4-2 x 12	7-11	2	6-10	2	6-2	3	7-9	2	6-9	2	6-0	3

For SI: 1 inch = 25.4 mm, 1 pound per square foot = 0.0479 kPa.

a. Spans are given in feet and inches.

b. Spans are based on minimum design properties for No. 2 grade lumber of Douglas Fir-Larch, Hem-Fir and Spruce-Pine Fir. No. 1 or better grade lumber shall be used for Southern Pine.

c. Building width is measured perpendicular to the ridge. For widths between those shown, spans are permitted to be interpolated.

d. NJ - Number of jack studs required to support each end. Where the number of required jack studs equals one, the header is permitted to be supported by an approved framing anchor attached to the full-height wall stud and to the header.

e. Use 30 psf ground snow load for cases in which ground snow load is less than 30 psf and the roof live load is equal to or less than 20 psf.

TABLE 2308.4.1.1(2)
HEADER AND GIRDER SPANS[a, b] FOR INTERIOR BEARING WALLS
(Maximum spans for Douglas Fir-Larch, Hem-Fir, Southern Pine and Spruce-Pine-Fir[b] and required number of jack studs)

HEADERS AND GIRDERS SUPPORTING	SIZE	BUILDING WIDTH[c] (feet)					
		20		28		36	
		Span	NJ[d]	Span	NJ[d]	Span	NJ[d]
One floor only	2-2 x 4	3-1	1	2-8	1	2-5	1
	2-2 x 6	4-6	1	3-11	1	3-6	1
	2-2 x 8	5-9	1	5-0	2	4-5	2
	2-2 x 10	7-0	2	6-1	2	5-5	2
	2-2 x 12	8-1	2	7-0	2	6-3	2
	3-2 x 8	7-2	1	6-3	1	5-7	2
	3-2 x 10	8-9	1	7-7	2	6-9	2
	3-2 x 12	10-2	2	8-10	2	7-10	2
	4-2 x 8	9-0	1	7-8	1	6-9	1
	4-2 x 10	10-1	1	8-9	1	7-10	2
	4-2 x 12	11-9	1	10-2	2	9-1	2
Two floors	2-2 x 4	2-2	1	1-10	1	1-7	1
	2-2 x 6	3-2	2	2-9	2	2-5	2
	2-2 x 8	4-1	2	3-6	2	3-2	2
	2-2 x 10	4-11	2	4-3	2	3-10	3
	2-2 x 12	5-9	2	5-0	3	4-5	3
	3-2 x 8	5-1	2	4-5	2	3-11	2
	3-2 x 10	6-2	2	5-4	2	4-10	2
	3-2 x 12	7-2	2	6-3	2	5-7	3
	4-2 x 8	6-1	1	5-3	2	4-8	2
	4-2 x 10	7-2	2	6-2	2	5-6	2
	4-2 x 12	8-4	2	7-2	2	6-5	2

For SI: 1 inch = 25.4 mm, 1 foot = 304.8 mm.

a. Spans are given in feet and inches.

b. Spans are based on minimum design properties for No. 2 grade lumber of Douglas Fir-Larch, Hem-Fir and Spruce-Pine Fir. No. 1 or better grade lumber shall be used for Southern Pine.

c. Building width is measured perpendicular to the ridge. For widths between those shown, spans are permitted to be interpolated.

d. NJ - Number of jack studs required to support each end. Where the number of required jack studs equals one, the header is permitted to be supported by an approved framing anchor attached to the full-height wall stud and to the header.

TABLE 2308.4.2.1(1)
FLOOR JOIST SPANS FOR COMMON LUMBER SPECIES
(Residential sleeping areas, live load = 30 psf, L/Δ = 360)

JOIST SPACING (inches)	SPECIES AND GRADE		DEAD LOAD = 10 psf				DEAD LOAD = 20 psf			
			2 × 6	2 × 8	2 × 10	2 × 12	2 × 6	2 × 8	2 × 10	2 × 12
			Maximum floor joist spans							
			(ft. - in.)	(ft. - in.)	(ft. - in.)	(ft. - in.)	(ft. - in.)	(ft. - in.)	(ft. - in.)	(ft. - in.)
12	Douglas Fir-Larch	SS	12-6	16-6	21-0	25-7	12-6	16-6	21-0	25-7
	Douglas Fir-Larch	#1	12-0	15-10	20-3	24-8	12-0	15-7	19-0	22-0
	Douglas Fir-Larch	#2	11-10	15-7	19-10	23-0	11-6	14-7	17-9	20-7
	Douglas Fir-Larch	#3	9-8	12-4	15-0	17-5	8-8	11-0	13-5	15-7
	Hem-Fir	SS	11-10	15-7	19-10	24-2	11-10	15-7	19-10	24-2
	Hem-Fir	#1	11-7	15-3	19-5	23-7	11-7	15-2	18-6	21-6
	Hem-Fir	#2	11-0	14-6	18-6	22-6	11-0	14-4	17-6	20-4
	Hem-Fir	#3	9-8	12-4	15-0	17-5	8-8	11-0	13-5	15-7
	Southern Pine	SS	12-3	16-2	20-8	25-1	12-3	16-2	20-8	25-1
	Southern Pine	#1	11-10	15-7	19-10	24-2	11-10	15-7	18-7	22-0
	Southern Pine	#2	11-3	14-11	18-1	21-4	10-9	13-8	16-2	19-1
	Southern Pine	#3	9-2	11-6	14-0	16-6	8-2	10-3	12-6	14-9
	Spruce-Pine-Fir	SS	11-7	15-3	19-5	23-7	11-7	15-3	19-5	23-7
	Spruce-Pine-Fir	#1	11-3	14-11	19-0	23-0	11-3	14-7	17-9	20-7
	Spruce-Pine-Fir	#2	11-3	14-11	19-0	23-0	11-3	14-7	17-9	20-7
	Spruce-Pine-Fir	#3	9-8	12-4	15-0	17-5	8-8	11-0	13-5	15-7
16	Douglas Fir-Larch	SS	11-4	15-0	19-1	23-3	11-4	15-0	19-1	23-0
	Douglas Fir-Larch	#1	10-11	14-5	18-5	21-4	10-8	13-6	16-5	19-1
	Douglas Fir-Larch	#2	10-9	14-1	17-2	19-11	9-11	12-7	15-5	17-10
	Douglas Fir-Larch	#3	8-5	10-8	13-0	15-1	7-6	9-6	11-8	13-6
	Hem-Fir	SS	10-9	14-2	18-0	21-11	10-9	14-2	18-0	21-11
	Hem-Fir	#1	10-6	13-10	17-8	20-9	10-4	13-1	16-0	18-7
	Hem-Fir	#2	10-0	13-2	16-10	19-8	9-10	12-5	15-2	17-7
	Hem-Fir	#3	8-5	10-8	13-0	15-1	7-6	9-6	11-8	13-6
	Southern Pine	SS	11-2	14-8	18-9	22-10	11-2	14-8	18-9	22-10
	Southern Pine	#1	10-9	14-2	18-0	21-4	10-9	13-9	16-1	19-1
	Southern Pine	#2	10-3	13-3	15-8	18-6	9-4	11-10	14-0	16-6
	Southern Pine	#3	7-11	10-10	12-1	14-4	7-1	8-11	10-10	12-10
	Spruce-Pine-Fir	SS	10-6	13-10	17-8	21-6	10-6	13-10	17-8	21-4
	Spruce-Pine-Fir	#1	10-3	13-6	17-2	19-11	9-11	12-7	15-5	17-10
	Spruce-Pine-Fir	#2	10-3	13-6	17-2	19-11	9-11	12-7	15-5	17-10
	Spruce-Pine-Fir	#3	8-5	10-8	13-0	15-1	7-6	9-6	11-8	13-6

(continued)

TABLE 2308.4.2.1(1)—continued
FLOOR JOIST SPANS FOR COMMON LUMBER SPECIES
(Residential sleeping areas, live load = 30 psf, L/Δ = 360)

JOIST SPACING (inches)	SPECIES AND GRADE		DEAD LOAD = 10 psf				DEAD LOAD = 20 psf			
			2 × 6	2 × 8	2 × 10	2 × 12	2 × 6	2 × 8	2 × 10	2 × 12
			Maximum floor joist spans							
			(ft. - in.)	(ft. - in.)	(ft. - in.)	(ft. - in.)	(ft. - in.)	(ft. - in.)	(ft. - in.)	(ft. - in.)
19.2	Douglas Fir-Larch	SS	10-8	14-1	18-0	21-10	10-8	14-1	18-0	21-0
	Douglas Fir-Larch	#1	10-4	13-7	16-9	19-6	9-8	12-4	15-0	17-5
	Douglas Fir-Larch	#2	10-1	12-10	15-8	18-3	9-1	11-6	14-1	16-3
	Douglas Fir-Larch	#3	7-8	9-9	11-10	13-9	6-10	8-8	10-7	12-4
	Hem-Fir	SS	10-1	13-4	17-0	20-8	10-1	13-4	17-0	20-7
	Hem-Fir	#1	9-10	13-0	16-4	19-0	9-6	12-0	14-8	17-0
	Hem-Fir	#2	9-5	12-5	15-6	17-1	8-11	11-4	13-10	16-1
	Hem-Fir	#3	7-8	9-9	11-10	13-9	6-10	8-8	10-7	12-4
	Southern Pine	SS	10-6	13-10	17-8	21-6	10-6	13-10	17-8	21-6
	Southern Pine	#1	10-1	13-4	16-5	19-6	9-11	12-7	14-8	17-5
	Southern Pine	#2	9-6	12-1	14-4	16-10	8-6	10-10	12-10	15-1
	Southern Pine	#3	7-3	9-1	11-0	13-1	6-5	8-2	9-10	11-8
	Spruce-Pine-Fir	SS	9-10	13-0	16-7	20-2	9-10	13-0	16-7	19-6
	Spruce-Pine-Fir	#1	9-8	12-9	15-8	18-3	9-1	11-6	14-1	16-3
	Spruce-Pine-Fir	#2	9-8	12-9	15-8	18-3	9-1	11-6	14-1	16-3
	Spruce-Pine-Fir	#3	7-8	9-9	11-10	13-9	6-10	8-8	10-7	12-4
24	Douglas Fir-Larch	SS	9-11	13-1	16-8	20-3	9-11	13-1	16-2	18-9
	Douglas Fir-Larch	#1	9-7	12-4	15-0	17-5	8-8	11-0	13-5	15-7
	Douglas Fir-Larch	#2	9-1	11-6	14-1	16-3	8-1	10-3	12-7	14-7
	Douglas Fir-Larch	#3	6-10	8-8	10-7	12-4	6-2	7-9	9-6	11-0
	Hem-Fir	SS	9-4	12-4	15-9	19-2	9-4	12-4	15-9	18-5
	Hem-Fir	#1	9-2	12-0	14-8	17-0	8-6	10-9	13-1	15-2
	Hem-Fir	#2	8-9	11-4	13-10	16-1	8-0	10-2	12-5	14-4
	Hem-Fir	#3	6-10	8-8	10-7	12-4	6-2	7-9	9-6	11-0
	Southern Pine	SS	9-9	12-10	16-5	19-11	9-9	12-10	16-5	19-8
	Southern Pine	#1	9-4	12-4	14-8	17-5	8-10	11-3	13-1	15-7
	Southern Pine	#2	8-6	10-10	12-10	15-1	7-7	9-8	11-5	13-6
	Southern Pine	#3	6-5	8-2	9-10	11-8	5-9	7-3	8-10	10-5
	Spruce-Pine-Fir	SS	9-2	12-1	15-5	18-9	9-2	12-1	15-0	17-5
	Spruce-Pine-Fir	#1	8-11	11-6	14-1	16-3	8-1	10-3	12-7	14-7
	Spruce-Pine-Fir	#2	8-11	11-6	14-1	16-3	8-1	10-3	12-7	14-7
	Spruce-Pine-Fir	#3	6-10	8-8	10-7	12-4	6-2	7-9	9-6	11-0

For SI: 1 inch = 25.4 mm, 1 foot = 304.8 mm, 1 pound per square foot = 0.0479 kPa.
Note: Check sources for availability of lumber in lengths greater than 20 feet.

TABLE 2308.4.2.1(2)
FLOOR JOIST SPANS FOR COMMON LUMBER SPECIES
(Residential living areas, live load = 40 psf, L/Δ = 360)

JOIST SPACING (inches)	SPECIES AND GRADE		DEAD LOAD = 10 psf				DEAD LOAD = 20 psf			
			2 × 6	2 × 8	2 × 10	2 × 12	2 × 6	2 × 8	2 × 10	2 × 12
			Maximum floor joist spans							
			(ft. - in.)	(ft. - in.)	(ft. - in.)	(ft. - in.)	(ft. - in.)	(ft. - in.)	(ft. - in.)	(ft. - in.)
12	Douglas Fir-Larch	SS	11-4	15-0	19-1	23-3	11-4	15-0	19-1	23-3
	Douglas Fir-Larch	#1	10-11	14-5	18-5	22-0	10-11	14-2	17-4	20-1
	Douglas Fir-Larch	#2	10-9	14-2	17-9	20-7	10-6	13-3	16-3	18-10
	Douglas Fir-Larch	#3	8-8	11-0	13-5	15-7	7-11	10-0	12-3	14-3
	Hem-Fir	SS	10-9	14-2	18-0	21-11	10-9	14-2	18-0	21-11
	Hem-Fir	#1	10-6	13-10	17-8	21-6	10-6	13-10	16-11	19-7
	Hem-Fir	#2	10-0	13-2	16-10	20-4	10-0	13-1	16-0	18-6
	Hem-Fir	#3	8-8	11-0	13-5	15-7	7-11	10-0	12-3	14-3
	Southern Pine	SS	11-2	14-8	18-9	22-10	11-2	14-8	18-9	22-10
	Southern Pine	#1	10-9	14-2	18-0	21-11	10-9	14-2	16-11	20-1
	Southern Pine	#2	10-3	13-6	16-2	19-1	9-10	12-6	14-9	17-5
	Southern Pine	#3	8-2	10-3	12-6	14-9	7-5	9-5	11-5	13-6
	Spruce-Pine-Fir	SS	10-6	13-10	17-8	21-6	10-6	13-10	17-8	21-6
	Spruce-Pine-Fir	#1	10-3	13-6	17-3	20-7	10-3	13-3	16-3	18-10
	Spruce-Pine-Fir	#2	10-3	13-6	17-3	20-7	10-3	13-3	16-3	18-10
	Spruce-Pine-Fir	#3	8-8	11-0	13-5	15-7	7-11	10-0	12-3	14-3
16	Douglas Fir-Larch	SS	10-4	13-7	17-4	21-1	10-4	13-7	17-4	21-0
	Douglas Fir-Larch	#1	9-11	13-1	16-5	19-1	9-8	12-4	15-0	17-5
	Douglas Fir-Larch	#2	9-9	12-7	15-5	17-10	9-1	11-6	14-1	16-3
	Douglas Fir-Larch	#3	7-6	9-6	11-8	13-6	6-10	8-8	10-7	12-4
	Hem-Fir	SS	9-9	12-10	16-5	19-11	9-9	12-10	16-5	19-11
	Hem-Fir	#1	9-6	12-7	16-0	18-7	9-6	12-0	14-8	17-0
	Hem-Fir	#2	9-1	12-0	15-2	17-7	8-11	11-4	13-10	16-1
	Hem-Fir	#3	7-6	9-6	11-8	13-6	6-10	8-8	10-7	12-4
	Southern Pine	SS	10-2	13-4	17-0	20-9	10-2	13-4	17-0	20-9
	Southern Pine	#1	9-9	12-10	16-1	19-1	9-9	12-7	14-8	17-5
	Southern Pine	#2	9-4	11-10	14-0	16-6	8-6	10-10	12-10	15-1
	Southern Pine	#3	7-1	8-11	10-10	12-10	6-5	8-2	9-10	11-8
	Spruce-Pine-Fir	SS	9-6	12-7	16-0	19-6	9-6	12-7	16-0	19-6
	Spruce-Pine-Fir	#1	9-4	12-3	15-5	17-10	9-1	11-6	14-1	16-3
	Spruce-Pine-Fir	#2	9-4	12-3	15-5	17-10	9-1	11-6	14-1	16-3
	Spruce-Pine-Fir	#3	7-6	9-6	11-8	13-6	6-10	8-8	10-7	12-4

(continued)

TABLE 2308.4.2.1(2)—continued
FLOOR JOIST SPANS FOR COMMON LUMBER SPECIES
(Residential living areas, live load = 40 psf, L/Δ = 360)

JOIST SPACING (inches)	SPECIES AND GRADE		DEAD LOAD = 10 psf				DEAD LOAD = 20 psf			
			2 × 6	2 × 8	2 × 10	2 × 12	2 × 6	2 × 8	2 × 10	2 × 12
			Maximum floor joist spans							
			(ft. - in.)	(ft. - in.)	(ft. - in.)	(ft. - in.)	(ft. - in.)	(ft. - in.)	(ft. - in.)	(ft. - in.)
19.2	Douglas Fir-Larch	SS	9-8	12-10	16-4	19-10	9-8	12-10	16-4	19-2
	Douglas Fir-Larch	#1	9-4	12-4	15-0	17-5	8-10	11-3	13-8	15-11
	Douglas Fir-Larch	#2	9-1	11-6	14-1	16-3	8-3	10-6	12-10	14-10
	Douglas Fir-Larch	#3	6-10	8-8	10-7	12-4	6-3	7-11	9-8	11-3
	Hem-Fir	SS	9-2	12-1	15-5	18-9	9-2	12-1	15-5	18-9
	Hem-Fir	#1	9-0	11-10	14-8	17-0	8-8	10-11	13-4	15-6
	Hem-Fir	#2	8-7	11-3	13-10	16-1	8-2	10-4	12-8	14-8
	Hem-Fir	#3	6-10	8-8	10-7	12-4	6-3	7-11	9-8	11-3
	Southern Pine	SS	9-6	12-7	16-0	19-6	9-6	12-7	16-0	19-6
	Southern Pine	#1	9-2	12-1	14-8	17-5	9-0	11-5	13-5	15-11
	Southern Pine	#2	8-6	10-10	12-10	15-1	7-9	9-10	11-8	13-9
	Southern Pine	#3	6-5	8-2	9-10	11-8	5-11	7-5	9-0	10-8
	Spruce-Pine-Fir	SS	9-0	11-10	15-1	18-4	9-0	11-10	15-1	17-9
	Spruce-Pine-Fir	#	8-9	11-6	14-1	16-3	8-3	10-6	12-10	14-10
	Spruce-Pine-Fir	#2	8-9	11-6	14-1	16-3	8-3	10-6	12-10	14-10
	Spruce-Pine-Fir	#3	6-10	8-8	10-7	12-4	6-3	7-11	9-8	11-3
24	Douglas Fir-Larch	SS	9-0	11-11	15-2	18-5	9-0	11-11	14-9	17-1
	Douglas Fir-Larch	#1	8-8	11-0	13-5	15-7	7-11	10-0	12-3	14-3
	Douglas Fir-Larch	#2	8-1	10-3	12-7	14-7	7-5	9-5	11-6	13-4
	Douglas Fir-Larch	#3	6-2	7-9	9-6	11-0	5-7	7-1	8-8	10-1
	Hem-Fir	SS	8-6	11-3	14-4	17-5	8-6	11-3	14-4	16-10[a]
	Hem-Fir	#1	8-4	10-9	13-1	15-2	7-9	9-9	11-11	13-10
	Hem-Fir	#2	7-11	10-2	12-5	14-4	7-4	9-3	11-4	13-1
	Hem-Fir	#3	6-2	7-9	9-6	11-0	5-7	7-1	8-8	10-1
	Southern Pine	SS	8-10	11-8	14-11	18-1	8-10	11-8	14-11	18-0
	Southern Pine	#1	8-6	11-3	13-1	15-7	8-1	10-3	12-0	14-3
	Southern Pine	#2	7-7	9-8	11-5	13-6	7-0	8-10	10-5	12-4
	Southern Pine	#3	5-9	7-3	8-10	10-5	5-3	6-8	8-1	9-6
	Spruce-Pine-Fir	SS	8-4	11-0	14-0	17-0	8-4	11-0	13-8	15-11
	Spruce-Pine-Fir	#1	8-1	10-3	12-7	14-7	7-5	9-5	11-6	13-4
	Spruce-Pine-Fir	#2	8-1	10-3	12-7	14-7	7-5	9-5	11-6	13-4
	Spruce-Pine-Fir	#3	6-2	7-9	9-6	11-0	5-7	7-1	8-8	10-1

For SI: 1 inch = 25.4 mm, 1 foot = 304.8 mm, 1 pound per square foot = 0.0479 kPa.
Note: Check sources for availability of lumber in lengths greater than 20 feet.
a. End bearing length shall be increased to 2 inches.

2308.4.4 Framing around openings. Trimmer and header joists shall be doubled, or of lumber of equivalent cross section, where the span of the header exceeds 4 feet (1219 mm). The ends of header joists more than 6 feet (1829 mm) in length shall be supported by framing anchors or joist hangers unless bearing on a beam, partition or wall. Tail joists over 12 feet (3658 mm) in length shall be supported at the header by framing anchors or on ledger strips not less than 2 inches by 2 inches (51 mm by 51 mm).

2308.4.4.1 Openings in floor diaphragms in Seismic Design Categories B, C, D and E. Openings in horizontal diaphragms in *Seismic Design Categories* B, C, D and E with a dimension that is greater than 4 feet (1219 mm) shall be constructed with metal ties and blocking in accordance with this section and Figure 2308.4.4.1(1). Metal ties shall be not less than 0.058 inch [1.47 mm (16 galvanized gage)] in thickness by $1^1/_2$ inches (38 mm) in width and shall have a yield stress not less than 33,000 psi (227 Mpa). Blocking shall extend not less than the dimension of the opening in the direction of the tie and blocking. Ties shall be attached to blocking in accordance with the manufacturer's instructions but with not less than eight 16d common nails on each side of the header-joist intersection.

Openings in floor diaphragms in *Seismic Design Categories* D and E shall not have any dimension exceeding 50 percent of the distance between braced wall lines or an area greater than 25 percent of the area between orthogonal pairs of braced wall lines [see Figure 2308.4.4.1(2)]; or the portion of the structure containing the opening shall be designed in accordance with accepted engineering practice to resist the forces specified in Chapter 16, to the extent such irregular opening affects the performance of the conventional framing system.

2308.4.4.2 Vertical offsets in floor diaphragms in Seismic Design Categories D and E. In *Seismic Design Categories* D and E, portions of a floor level shall not be vertically offset such that the framing members on either side of the offset cannot be lapped or tied together in an *approved* manner in accordance with Figure 2308.4.4.2 unless the portion of the structure containing the irregular offset is designed in accordance with accepted engineering practice.

Exception: Framing supported directly by foundations need not be lapped or tied directly together.

2308.4.5 Joists supporting bearing partitions. Bearing partitions parallel to joists shall be supported on beams, girders, doubled joists, walls or other bearing partitions. Bearing partitions perpendicular to joists shall not be offset from supporting girders, walls or partitions more than the joist depth unless such joists are of sufficient size to carry the additional load.

2308.4.6 Lateral support. Floor and ceiling framing with a nominal depth-to-thickness ratio not less than 5 to 1 shall have one edge held in line for the entire span. Where the nominal depth-to-thickness ratio of the framing member exceeds 6 to 1, there shall be one line of bridging for each 8 feet (2438 mm) of span, unless both edges of the member are held in line. The bridging shall consist of not less than 1-inch by 3-inch (25 mm by 76 mm) lumber, double

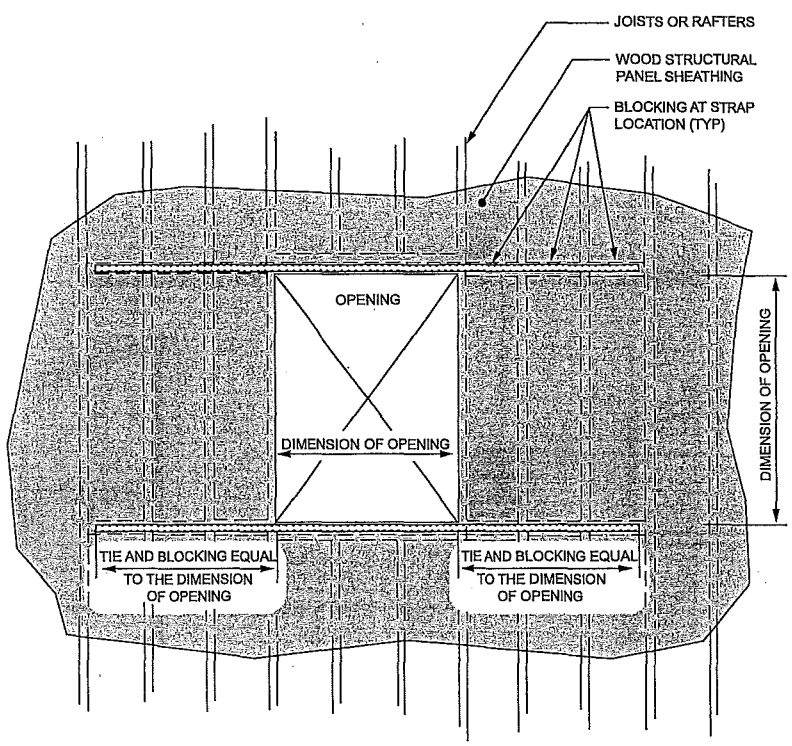

FIGURE 2308.4.4.1(1)
OPENINGS IN FLOOR AND ROOF DIAPHRAGMS

nailed at each end, or equivalent metal bracing of equal rigidity, full-depth solid blocking or other *approved* means. A line of bridging shall also be required at supports where equivalent lateral support is not otherwise provided.

2308.4.7 Structural floor sheathing. Structural floor sheathing shall comply with the provisions of Section 2304.8.1.

2308.4.8 Under-floor ventilation. For under-floor ventilation, see Section 1203.4.

2308.4.9 Floor framing supporting braced wall panels. Where braced wall panels are supported by cantilevered floors or are set back from the floor joist support, the floor framing shall comply with Section 2308.6.7.

2308.4.10 Anchorage of exterior means of egress components in Seismic Design Categories D and E. Exterior egress balconies, exterior stairways and ramps and similar means of egress components in structures assigned to *Seismic Design Category* D or E shall be positively anchored to the primary structure at not more than 8 feet (2438 mm) on center or shall be designed for lateral forces. Such attachment shall not be accomplished by use of toenails or nails subject to withdrawal.

2308.5 Wall construction. Walls of *conventional light-frame* construction shall be in accordance with this section.

2308.5.1 Stud size, height and spacing. The size, height and spacing of studs shall be in accordance with Table 2308.5.1.

Studs shall be continuous from a support at the sole plate to a support at the top plate to resist loads perpendicular to the wall. The support shall be a foundation or floor, ceiling or roof diaphragm or shall be designed in accordance with accepted engineering practice.

Exception: Jack studs, trimmer studs and cripple studs at openings in walls that comply with Table 2308.4.1.1(1) or 2308.4.1.1(2).

2308.5.2 Framing details. Studs shall be placed with their wide dimension perpendicular to the wall. Not less than three studs shall be installed at each corner of an *exterior wall.*

Exceptions:

1. In interior nonbearing walls and partitions, studs are permitted to be set with the long dimension parallel to the wall.
2. At corners, two studs are permitted, provided that wood spacers or backup cleats of $^3/_8$-inch-thick (9.5 mm) wood structural panel, $^3/_8$-inch (9.5 mm) Type M "Exterior Glue" particleboard, 1-inch-thick (25

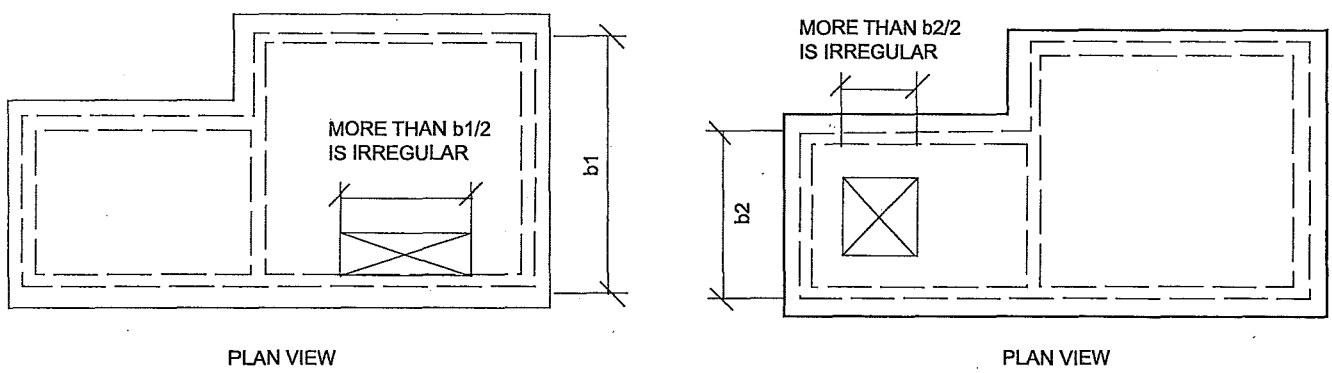

FIGURE 2308.4.4.1(2)
OPENING LIMITATIONS FOR FLOOR AND ROOF DIAPHRAGMS

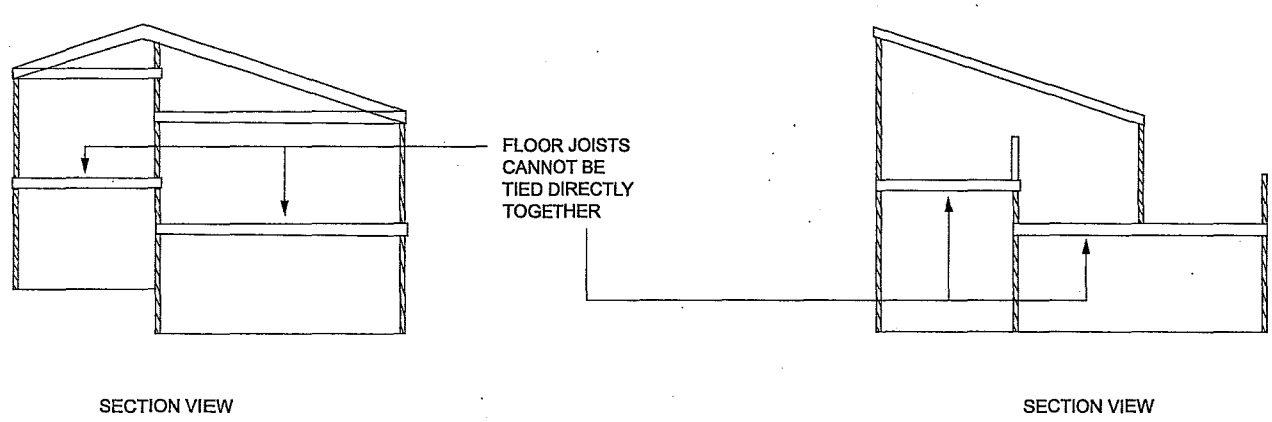

FIGUR 2308.4.4.2
PORTIONS OF FLOOR LEVEL OFFSET VERTICALLY

2092

mm) lumber or other approved devices that will serve as an adequate backing for the attachment of facing materials are used. Where *fire-resistance ratings* or shear values are involved, wood spacers, backup cleats or other devices shall not be used unless specifically *approved* for such use.

2308.5.3 Plates and sills. Studs shall have plates and sills in accordance with this section.

2308.5.3.1 Bottom plate or sill. Studs shall have full bearing on a plate or sill. Plates or sills shall be not less than 2 inches (51 mm) nominal in thickness and have a width not less than the width of the wall studs.

2308.5.3.2 Top plates. Bearing and exterior wall studs shall be capped with double top plates installed to provide overlapping at corners and at intersections with other partitions. End joints in double top plates shall be offset not less than 48 inches (1219 mm), and shall be nailed in accordance with Table 2304.10.1. Plates shall be a nominal 2 inches (51 mm) in depth and have a width not less than the width of the studs.

Exception: A single top plate is permitted, provided that the plate is adequately tied at corners and intersecting walls by not less than the equivalent of 3-inch by 6-inch (76 mm by 152 mm) by 0.036-inch-thick (0.914 mm) galvanized steel plate that is nailed to each wall or segment of wall by six 8d [$2^1/_2$" × 0.113" (64-mm by 2.87 mm)] box nails or equivalent on each side of the joint. For the butt-joint splice between adjacent single top plates, not less than the equivalent of a 3-inch by 12-inch (76 mm by 304 mm) by 0.036-inch-thick (0.914 mm) galvanized steel plate that is nailed to each wall or segment of wall by 12 8d [$2^1/_2$-inch × 0.113-inch (64 mm by 2.87 mm)] box nails on each side of the joint shall be required, provided that the rafters, joists or trusses are centered over the studs with a tolerance of not more than 1 inch (25 mm). The top plate shall not be required over headers that are in the same plane and in line with the upper surface of the adjacent top plates and are tied to adjacent wall sections as required for the butt joint splice between adjacent single top plates.

Where bearing studs are spaced at 24-inch (610 mm) intervals, top plates are less than two 2-inch by 6-inch (51 mm by 152 mm) or two 3-inch by 4-inch (76 mm by 102 mm) members and the floor joists, floor trusses or roof trusses that they support are spaced at more than 16-inch (406 mm) intervals, such joists or trusses shall bear within 5 inches (127 mm) of the studs beneath or a third plate shall be installed.

2308.5.4 Nonload-bearing walls and partitions. In nonload-bearing walls and partitions, that are not part of a braced wall panel, studs shall be spaced not more than 24 inches (610 mm) on center. In interior nonload-bearing walls and partitions, studs are permitted to be set with the long dimension parallel to the wall. Where studs are set with the long dimensions parallel to the wall, use of utility grade lumber or studs exceeding 10 feet (3048 mm) is not permitted. Interior nonload-bearing partitions shall be capped with not less than a single top plate installed to provide overlapping at corners and at intersections with other walls and partitions. The plate shall be continuously tied at joints by solid blocking not less than 16 inches (406 mm) in length and equal in size to the plate or by $^1/_2$-inch by $1^1/_2$-inch (12.7 mm by 38 mm) metal ties with spliced sections fastened with two 16d nails on each side of the joint.

2308.5.5 Openings in walls and partitions. Openings in exterior and interior walls and partitions shall comply with Sections 2308.5.5.1 through 2308.5.5.3.

2308.5.5.1 Openings in exterior bearing walls. Headers shall be provided over each opening in exterior bearing walls. The size and spans in Table 2308.4.1.1(1) are permitted to be used for one- and two-family *dwellings*. Headers for other buildings shall be designed in accordance with Section 2301.2, Item 1 or 2. Headers shall be of two pieces of nominal 2-inch (51 mm) framing lumber set on edge as permitted by Table 2308.4.1.1(1) and nailed together in accordance with Table 2304.10.1 or of solid lumber of equivalent size.

TABLE 2308.5.1
SIZE, HEIGHT AND SPACING OF WOOD STUDS[c]

STUD SIZE (inches)	BEARING WALLS				NONBEARING WALLS	
	Laterally unsupported stud height[a] (feet)	Supporting roof and ceiling only	Supporting one floor, roof and ceiling	Supporting two floors, roof and ceiling	Laterally unsupported stud height[a] (feet)	Spacing (inches)
		Spacing (inches)				
2 × 3[b]	—	—	—	—	10	16
2 × 4	10	24	16	—	14	24
3 × 4	10	24	24	16	14	24
2 × 5	10	24	24	—	16	24
2 × 6	10	24	24	16	20	24

For SI: 1 inch = 25.4 mm, 1 foot = 304.8 mm.

a. Listed heights are distances between points of lateral support placed perpendicular to the plane of the wall. Increases in unsupported height are permitted where justified by an analysis.

b. Shall not be used in exterior walls.

c. Utility-grade studs shall not be spaced more than 16 inches on center or support more than a roof and ceiling, or exceed 8 feet in height for exterior walls and load-bearing walls or 10 feet for interior nonload-bearing walls.

Wall studs shall support the ends of the header in accordance with Table 2308.4.1.1(1). Each end of a lintel or header shall have a bearing length of not less than $1^1/_2$ inches (38 mm) for the full width of the lintel.

2308.5.5.2 Openings in interior bearing partitions. Headers shall be provided over each opening in interior bearing partitions as required in Section 2308.5.5.1. The spans in Table 2308.4.1.1(2) are permitted to be used. Wall studs shall support the ends of the header in accordance with Table 2308.4.1.1(1) or 2308.4.1.1(2), as applicable.

2308.5.5.3 Openings in interior nonbearing partitions. Openings in nonbearing partitions are permitted to be framed with single studs and headers. Each end of a lintel or header shall have a bearing length of not less than $1^1/_2$ inches (38 mm) for the full width of the lintel.

2308.5.6 Cripple walls. Foundation cripple walls shall be framed of studs that are not less than the size of the studding above and not less than 14 inches (356 mm) in length, or shall be framed of solid blocking. Where exceeding 4 feet (1219 mm) in height, such walls shall be framed of studs having the size required for an additional *story*. See Section 2308.6.6 for cripple wall bracing.

2308.5.7 Bridging. Unless covered by interior or *exterior wall coverings* or sheathing meeting the minimum requirements of this code, stud partitions or walls with studs having a height-to-least-thickness ratio exceeding 50 shall have bridging that is not less than 2 inches (51 mm) in thickness and of the same width as the studs fitted snugly and nailed thereto to provide adequate lateral support. Bridging shall be placed in every stud cavity and at a frequency such that no stud so braced shall have a height-to-least-thickness ratio exceeding 50 with the height of the stud measured between horizontal framing and bridging or between bridging, whichever is greater.

2308.5.8 Pipes in walls. Stud partitions containing plumbing, heating or other pipes shall be framed and the joists underneath spaced to provide proper clearance for the piping. Where a partition containing piping runs parallel to the floor joists, the joists underneath such partitions shall be doubled and spaced to permit the passage of pipes and shall be bridged. Where plumbing, heating or other pipes are placed in, or partly in, a partition, necessitating the cutting of the soles or plates, a metal tie not less than 0.058 inch (1.47 mm) (16 galvanized gage) and $1^1/_2$ inches (38 mm) in width shall be fastened to each plate across and to each side of the opening with not less than six 16d nails.

2308.5.9 Cutting and notching. In exterior walls and bearing partitions, wood studs are permitted to be cut or notched to a depth not exceeding 25 percent of the width of the stud. Cutting or notching of studs to a depth not greater than 40 percent of the width of the stud is permitted in nonbearing partitions supporting no loads other than the weight of the partition.

2308.5.10 Bored holes. Bored holes not greater than 40 percent of the stud width are permitted to be bored in any wood stud. Bored holes not greater than 60 percent of the stud width are permitted in nonbearing partitions or in any wall where each bored stud is doubled, provided not more than two such successive doubled studs are so bored. In no case shall the edge of a bored hole be nearer than $^5/_8$ inch (15.9 mm) to the edge of the stud. Bored holes shall not be located at the same section of stud as a cut or notch.

2308.5.11 Exterior wall sheathing. Except where stucco construction that complies with Section 2510 is installed, the outside of exterior walls, including gables, of enclosed buildings shall be sheathed with one of the materials of the nominal thickness specified in Table 2308.5.11 with fasteners in accordance with the requirements of Section 2304.10 or fasteners designed in accordance with accepted engineering practice. Alternatively, sheathing materials and fasteners complying with Section 2304.6 shall be permitted.

2308.6 Wall bracing. Buildings shall be provided with exterior and interior braced wall lines as described in Sections 2308.6.1 through 2308.6.10.2.

2308.6.1 Braced wall lines. For the purpose of determining the amount and location of bracing required along each *story* level of a building, *braced wall lines* shall be designated as straight lines through the building plan in both the longitudinal and transverse direction and placed in accordance with Table 2308.6.1 and Figure 2308.6.1. Braced wall line spacing shall not exceed the distance specified in Table 2308.6.1. In structures assigned to *Seismic Design Category* D or E, braced wall lines shall intersect perpendicularly to each other.

**

TABLE 2308.5.11
MINIMUM THICKNESS OF WALL SHEATHING

SHEATHING TYPE	MINIMUM THICKNESS	MAXIMUM WALL STUD SPACING
Diagonal wood boards	$^5/_8$ inch	24 inches on center
Structural fiberboard	$^1/_2$ inch	16 inches on center
Wood structural panel	In accordance with Tables 2308.6.3(2) and 2308.6.3(3)	—
M-S "Exterior Glue" and M-2 "Exterior Glue" particleboard	In accordance with Section 2306.3 and Table 2308.6.3(4)	—
Gypsum sheathing	$^1/_2$ inch	16 inches on center
Reinforced cement mortar	1 inch	24 inches on center
Hardboard panel siding	In accordance with Table 2308.6.3(5)	—

For SI: 1 inch = 25.4 mm.

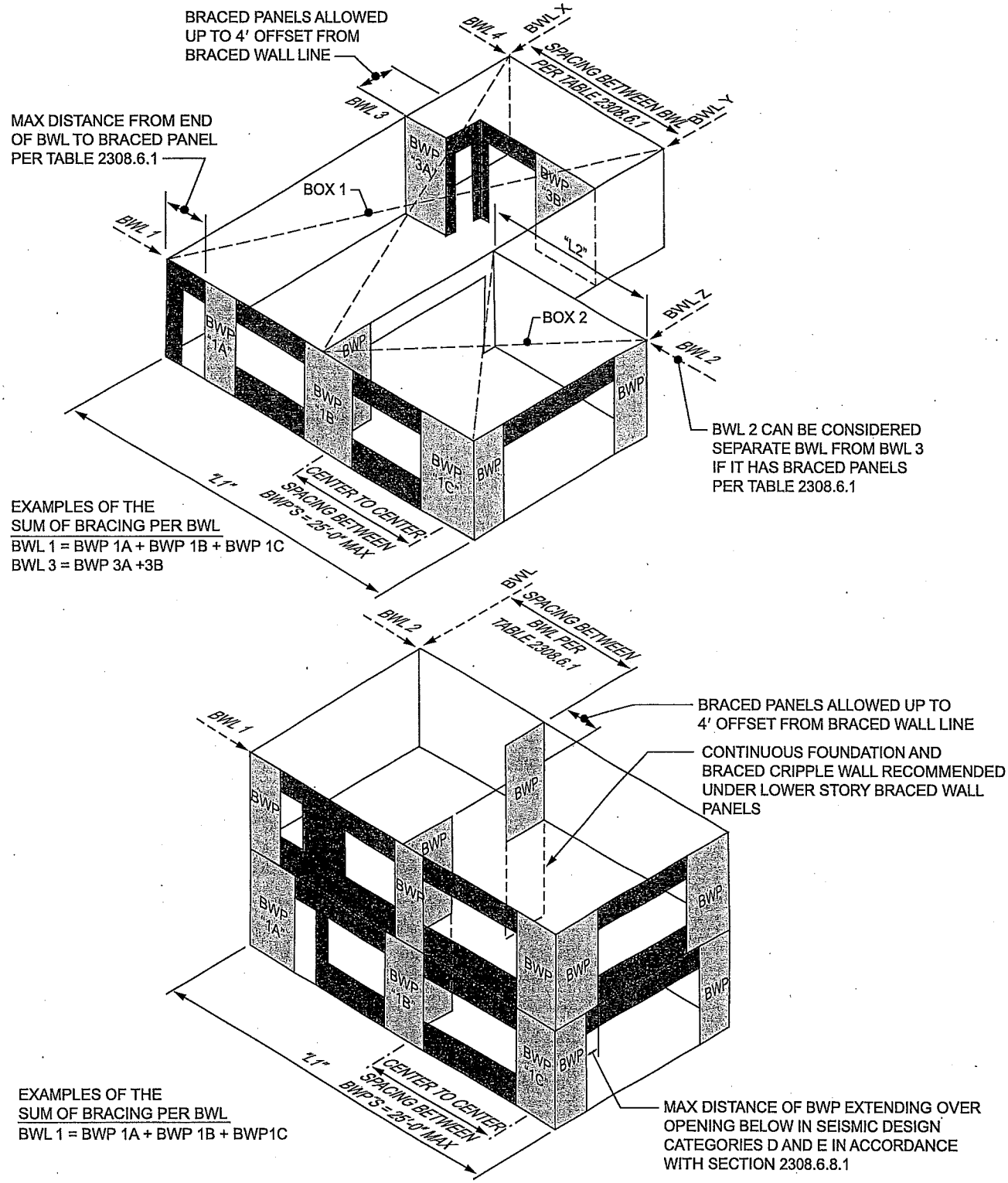

For SI: 1 foot = 304.8 mm.

FIGURE 2308.6.1
BASIC COMPONENTS OF THE LATERAL BRACING SYSTEM

TABLE 2308.6.1[a]
WALL BRACING REQUIREMENTS

SEISMIC DESIGN CATEGORY	STORY CONDITION (SEE SECTION 2308.2)	MAXIMUM SPACING OF BRACED WALL LINES	BRACED PANEL LOCATION, SPACING (O.C.) AND MINIMUM PERCENTAGE (X)			MAXIMUM DISTANCE OF BRACED WALL PANELS FROM EACH END OF BRACED WALL LINE
			Bracing method[b]			
			LIB	DWB, WSP	SFB, PBS, PCP, HPS, GB[c, d]	
A and B	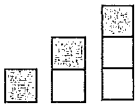	35′- 0″	Each end and ≤ 25′- 0″ o.c.	Each end and ≤ 25′- 0″ o.c.	Each end and ≤ 25′- 0″ o.c.	12′- 6″
	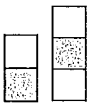	35′- 0″	Each end and ≤ 25′- 0″ o.c.	Each end and ≤ 25′- 0″ o.c.	Each end and ≤ 25′- 0″ o.c.	12′- 6″
	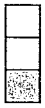	35′- 0″	NP	Each end and ≤ 25′- 0″ o.c.	Each end and ≤ 25′- 0″ o.c.	12′- 6″
C		35′- 0″	NP	Each end and ≤ 25′- 0″ o.c.	Each end and ≤ 25′- 0″ o.c.	12′- 6″
		35′- 0″	NP	Each end and ≤ 25′- 0″ o.c. (minimum 25% of wall length)[e]	Each end and ≤ 25′- 0″ o.c. (minimum 25% of wall length)[e]	12′- 6″
D and E		25′- 0″	NP	$S_{DS} < 0.50$: Each end and ≤ 25′- 0″ o.c. (minimum 21% of wall length)[e]	$S_{DS} < 0.50$: Each end and ≤ 25′- 0″ o.c. (minimum 43% of wall length)[e]	8′- 0″
				$0.5 \le S_{DS} < 0.75$: Each end and ≤ 25′- 0″ o.c. (minimum 32% of wall length)[e]	$0.5 \le S_{DS} < 0.75$: Each end and ≤ 25′- 0″ o.c. (minimum 59% of wall length)[e]	
				$0.75 \le S_{DS} \le 1.00$: Each end and ≤ 25′- 0″ o.c. (minimum 37% of wall length)[e]	$0.75 \le S_{DS} \le 1.00$: Each end and ≤ 25′- 0″ o.c. (minimum 75% of wall length)	
				$S_{DS} > 1.00$: Each end and ≤ 25′- 0″ o.c. (minimum 48% of wall length)[e]	$S_{DS} > 1.00$: Each end and ≤ 25′- 0″ o.c. (minimum 100% of wall length)[e]	

For SI: 1 inch = 25.4 mm, 1 foot = 304.8 mm.

NP = Not Permitted.

a. This table specifies minimum requirements for braced wall panels along interior or exterior braced wall lines.

b. See Section 2308.6.3 for full description of bracing methods.

c. For Method GB, gypsum wallboard applied to framing supports that are spaced at 16 inches on center.

d. The required lengths shall be doubled for gypsum board applied to only one face of a braced wall panel.

e. Percentage shown represents the minimum amount of bracing required along the building length (or wall length if the structure has an irregular shape).

2308.6.2 Braced wall panels. *Braced wall panels* shall be placed along *braced wall lines* in accordance with Table 2308.6.1 and Figure 2308.6.1 and as specified in Table 2308.6.3(1). A *braced wall panel* shall be located at each end of the *braced wall line* and at the corners of intersecting *braced wall lines* or shall begin within the maximum distance from the end of the *braced wall line* in accordance with Table 2308.6.1. *Braced wall panels* in a *braced wall line* shall not be offset from each other by more than 4 feet (1219 mm). *Braced wall panels* shall be clearly indicated on the plans.

2308.6.3 Braced wall panel methods. Construction of *braced wall panels* shall be by one or a combination of the methods in Table 2308.6.3(1). *Braced wall panel* length shall be in accordance with Section 2308.6.4 or 2308.6.5.

2308.6.4 Braced wall panel construction. For Methods DWB, WSP, SFB, PBS, PCP and HPS, each panel must be not less than 48 inches (1219 mm) in length, covering three stud spaces where studs are spaced 16 inches (406 mm) on center and covering two stud spaces where studs are spaced 24 inches (610 mm) on center. *Braced wall panels* less than 48 inches (1219 mm) in length shall not contribute toward the amount of required bracing. *Braced wall panels* that are longer than the required length shall be credited for their actual length. For Method GB, each panel must be not less than 96 inches (2438 mm) in length where applied to one side of the studs or 48 inches (1219 mm) in length where applied to both sides.

Vertical joints of panel sheathing shall occur over studs and adjacent panel joints shall be nailed to common framing members. Horizontal joints shall occur over blocking or other framing equal in size to the studding except where waived by the installation requirements for the specific sheathing materials. Sole plates shall be nailed to the floor framing in accordance with Section 2308.6.7 and top plates shall be connected to the framing above in accordance with Section 2308.6.7.2. Where joists are perpendicular to braced wall lines above, blocking shall be provided under and in line with the braced *wall panels*.

TABLE 2308.6.3(1)
BRACING METHODS

METHODS, MATERIAL	MINIMUM THICKNESS	FIGURE	CONNECTION CRITERIA[a]	
			Fasteners	Spacing
LIB[a] Let-in-bracing	1″ × 4″ wood or approved metal straps attached at 45° to 60° angles to studs at maximum of 16″ o.c.	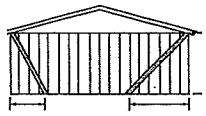	Table 2304.10.1	Wood: per stud plus top and bottom plates
			Metal strap: installed in accordance with manufacturer's recommendations	Metal strap: installed in accordance with manufacturer's recommendations
DWB Diagonal wood boards	$^3/_4$″ thick (1″ nominal) × 6″ minimum width to studs at maximum of 24″ o.c.	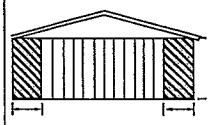	Table 2304.10.1	Per stud
WSP Wood structural panel	$^3/_8$″ in accordance with Table 2308.6.3(2) or 2308.6.3(3)	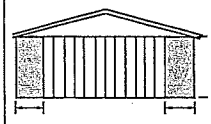	Table 2304.10.1	6″ edges 12″ field
SFB Structural fiberboard sheathing	$^1/_2$″ in accordance with Table 2304.10.1 to studs at maximum 16″ o.c.	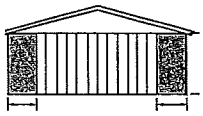	Table 2304.10.1	3″ edges 6″ field

(continued)

TABLE 2308.6.3(1)—continued
BRACING METHODS

METHODS, MATERIAL	MINIMUM THICKNESS	FIGURE	CONNECTION CRITERIA[a]	
			Fasteners	Spacing
GB Gypsum board (Double sided)	$^1/_2$″ or $^5/_8$″ by a minimum of 4′ wide to studs at maximum of 24″ o.c.	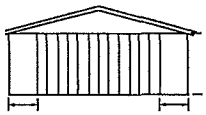	Section 2506.2 for exterior and interior sheathing: 5d annual ringed cooler nails ($1^5/_8$″ × 0.086″) or $1^1/_4$″ screws (Type W or S) for $^1/_2$″ gypsum board or $1^5/_8$″ screws (Type W or S) for $^5/_8$″ gypsum board	For all braced wall panel locations: 7″ o.c. along panel edges (including top and bottom plates) and 7″ o.c. in the field
PBS Particleboard sheathing	$^3/_8$″ or $^1/_2$″ in accordance with Table 2308.6.3(4) to studs at maximum of 16″ o.c.		6d common (2″ long × 0.113″ dia.) nails for $^3/_8$″ thick sheathing or 8d common ($2^1/_2$″ long × 0.131″ dia.) nails for $^1/_2$″ thick sheathing	3″ edges 6″ field
PCP Portland cement plaster	Section 2510 to studs at maximum of 16″ o.c.	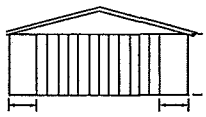	$1^1/_2$″ long, 11 gage, $^7/_{16}$″ dia. head nails or $^7/_8$″ long, 16 gage staples	6″ o.c. on all framing members
HPS Hardboard panel siding	$^7/_{16}$″ in accordance with Table 2308.6.3(5)	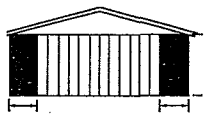	Table 2304.10.1	4″ edges 8″ field
ABW Alternate braced wall	$^3/_8$″	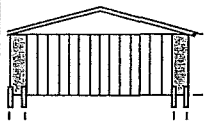	Figure 2308.6.5.1 and Section 2308.6.5.1	Figure 2308.6.5.1
PFH Portal frame with hold-downs	$^3/_8$″	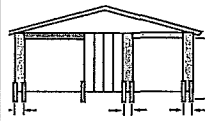	Figure 2308.6.5.2 and Section 2308.6.5.2	Figure 2308.6.5.2

For SI: 1 foot = 304.8 mm, 1 degree = 0.01745 rad.

a. Method LIB shall have gypsum board fastened to at least one side with nails or screws.

TABLE 2308.6.3(2)
EXPOSED PLYWOOD PANEL SIDING

MINIMUM THICKNESS[a] (inch)	MINIMUM NUMBER OF PLIES	STUD SPACING (inches) Plywood siding applied directly to studs or over sheathing
$^3/_8$	3	16[b]
$^1/_2$	4	24

For SI: 1 inch = 25.4 mm.

a. Thickness of grooved panels is measured at bottom of grooves.

b. Spans are permitted to be 24 inches if plywood siding applied with face grain perpendicular to studs or over one of the following: (1) 1-inch board sheathing, (2) $^7/_{16}$-inch wood structural panel sheathing or (3) $^3/_8$-inch wood structural panel sheathing with strength axis (which is the long direction of the panel unless otherwise marked) of sheathing perpendicular to studs.

TABLE 2308.6.3(3)
WOOD STRUCTURAL PANEL WALL SHEATHING[b]
(Not Exposed to the Weather, Strength Axis Parallel or Perpendicular to Studs Except as Indicated Below)

MINIMUM THICKNESS (inch)	PANEL SPAN RATING	STUD SPACING (inches)		
		Siding nailed to studs	Nailable sheathing	
			Sheathing parallel to studs	Sheathing perpendicular to studs
$^3/_8$, $^{15}/_{32}$, $^1/_2$	16/0, 20/0, 24/0, 32/16 Wall—24″ o.c.	24	16	24
$^7/_{16}$, $^{15}/_{32}$, $^1/_2$	24/0, 24/16, 32/16 Wall—24″ o.c.	24	24[a]	24

For SI: 1 inch = 25.4 mm.
a. Plywood shall consist of four or more plies.
b. Blocking of horizontal joints shall not be required except as specified in Section 2308.6.4.

TABLE 2308.6.3(4)
ALLOWABLE SPANS FOR PARTICLEBOARD WALL SHEATHING
(Not Exposed to the Weather, Long Dimension of the Panel Parallel or Perpendicular to Studs)

GRADE	THICKNESS (inch)	STUD SPACING (inches)	
		Siding nailed to studs	Sheathing under coverings specified in Section 2308.6.3 parallel or perpendicular to studs
M-S "Exterior Glue" and M-2 "Exterior Glue"	$^3/_8$	16	—
	$^1/_2$	16	16

For SI: 1 inch = 25.4 mm.

TABLE 2308.6.3(5)
HARDBOARD SIDING

SIDING	MINIMUM NOMINAL THICKNESS (inch)	2 × 4 FRAMING MAXIMUM SPACING	NAIL SIZE[a, b, d]	NAIL SPACING	
				General	Bracing panels[c]
1. Lap siding					
Direct to studs	$^3/_8$	16″ o.c.	8d	16″ o.c.	Not applicable
Over sheathing	$^3/_8$	16″ o.c.	10d	16″ o.c.	Not applicable
2. Square edge panel siding					
Direct to studs	$^3/_8$	24″ o.c.	6d	6″ o.c. edges; 12″ o.c. at intermediate supports	4″ o.c. edges; 8″ o.c. at intermediate supports
Over sheathing	$^3/_8$	24″ o.c.	8d	6″ o.c. edges; 12″ o.c. at intermediate supports	4″ o.c. edges; 8″ o.c. at intermediate supports
3. Shiplap edge panel siding					
Direct to studs	$^3/_8$	16″ o.c.	6d	6″ o.c. edges; 12″ o.c. at intermediate supports	4″ o.c. edges; 8″ o.c. at intermediate supports
Over sheathing	$^3/_8$	16″ o.c.	8d	6″ o.c. edges; 12″ o.c. at intermediate supports	4″ o.c. edges; 8″ o.c. at intermediate supports

For SI: 1 inch = 25.4 mm.
a. Nails shall be corrosion resistant.
b. Minimum acceptable nail dimensions:

	Panel Siding (inch)	Lap Siding (inch)
Shank diameter	0.092	0.099
Head diameter	0.225	0.240

c. Where used to comply with Section 2308.6.
d. Nail length must accommodate the sheathing and penetrate framing $1^1/_2$ inches.

2308.6.5 Alternative bracing. An alternate braced wall (ABW) or a portal frame with hold-downs (PFH) described in this section is permitted to substitute for a 48-inch (1219 mm) *braced wall panel* of Method DWB, WSP, SFB, PBS, PCP or HPS. For Method GB, each 96-inch (2438 mm) section (applied to one face) or 48-inch (1219 mm) section (applied to both faces) or portion thereof required by Table 2308.6.1 is permitted to be replaced by one panel constructed in accordance with Method ABW or PFH.

2308.6.5.1. Alternate braced wall (ABW). An ABW shall be constructed in accordance with this section and Figure 2308.6.5.1. In one-story buildings, each panel shall have a length of not less than 2 feet 8 inches (813 mm) and a height of not more than 10 feet (3048 mm). Each panel shall be sheathed on one face with $^3/_8$-inch (3.2 mm) minimum-thickness wood structural panel sheathing nailed with 8d common or galvanized box nails in accordance with Table 2304.10.1 and blocked at wood structural panel edges. Two anchor bolts installed in accordance with Section 2308.3.1 shall be provided in each panel. Anchor bolts shall be placed at each panel outside quarter points. Each panel end stud shall have a hold-down device fastened to the foundation, capable of providing an *approved* uplift capacity of not less than 1,800 pounds (8006 N). The hold-down device shall be installed in accordance with the manufacturer's recommendations. The ABW shall be supported directly on a foundation or on floor framing supported directly on a foundation that is continuous across the entire length of the *braced wall line*. This foundation shall be reinforced with not less than one No. 4 bar top and bottom. Where the continuous foundation is required to have a depth greater than 12 inches (305 mm), a minimum 12-inch by 12-inch (305 mm by 305 mm) continuous footing or turned-down slab edge is permitted at door openings in the *braced wall line*. This continuous footing or turned-down slab edge shall be reinforced with not less than one No. 4 bar top and bottom. This reinforcement shall be lapped 15 inches (381 mm) with the reinforcement required in the continuous foundation located directly under the *braced wall line*.

Where the ABW is installed at the first *story* of two-story buildings, the wood structural panel sheathing shall be provided on both faces, three anchor bolts shall be placed at one-quarter points and tie-down device uplift capacity shall be not less than 3,000 pounds (13 344 N).

2308.6.5.2 Portal frame with hold-downs (PFH). A PFH shall be constructed in accordance with this section and Figure 2308.6.5.2. The adjacent door or window opening shall have a full-length header.

In one-story buildings, each panel shall have a length of not less than 16 inches (406 mm) and a height of not more than 10 feet (3048 mm). Each panel shall be sheathed on one face with a single layer of $^3/_8$-inch (9.5 mm) minimum-thickness wood structural panel sheathing nailed with 8d common or galvanized box nails in accordance with Figure 2308.6.5.2. The wood structural panel sheathing shall extend up over the solid sawn or glued-laminated header and shall be nailed in accordance with Figure 2308.6.5.2. A built-up header consisting of at least two 2-inch by 12-inch (51 mm by 305 mm) boards, fastened in accordance with Item 24 of Table 2304.10.1 shall be permitted to be used. A spacer, if used, shall be placed on the side of the built-up beam opposite the wood structural panel sheathing. The header shall extend between the inside faces of the first full-length outer studs of each panel. The clear span of the header between the inner studs of each panel shall be not less than 6 feet (1829 mm) and not more than 18 feet (5486 mm) in length. A strap with an

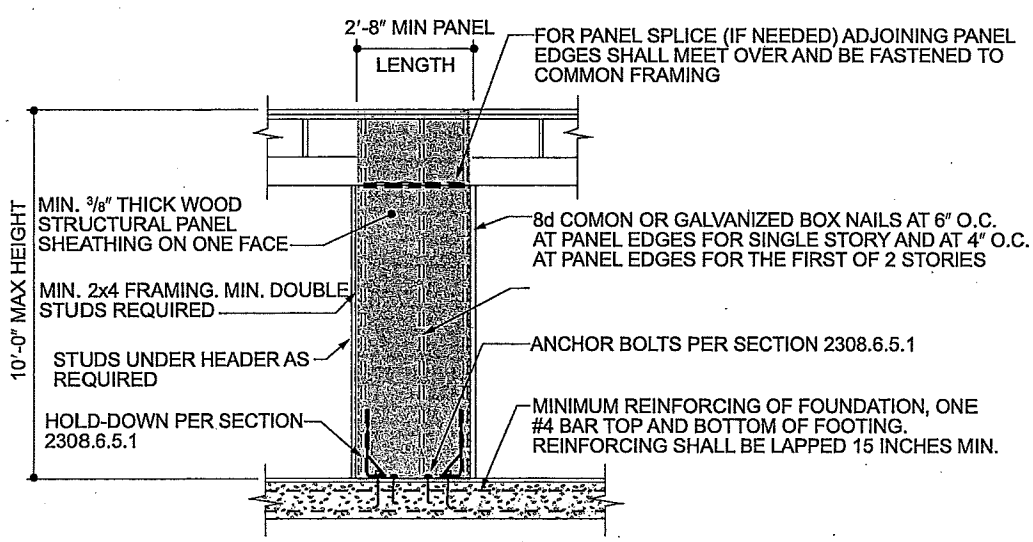

For SI: 1 inch = 25.4 mm, 1 foot = 304.8 mm.

FIGURE 2308.6.5.1
ALTERNATE BRACED WALL PANEL (ABW)

2100

uplift capacity of not less than 1,000 pounds (4,400 N) shall fasten the header to the inner studs opposite the sheathing. One anchor bolt not less than $^5/_8$ inch (15.9 mm) diameter and installed in accordance with Section 2308.3.1 shall be provided in the center of each sill plate. The studs at each end of the panel shall have a hold-down device fastened to the foundation with an uplift capacity of not less than 3,500 pounds (15 570 N).

Where a panel is located on one side of the opening, the header shall extend between the inside face of the first full-length stud of the panel and the bearing studs at the other end of the opening. A strap with an uplift capacity of not less than 1,000 pounds (4400 N) shall fasten the header to the bearing studs. The bearing studs shall also have a hold-down device fastened to the foundation with an uplift capacity of not less than 1,000 pounds (4400 N). The hold-down devices shall be an embedded strap type, installed in accordance with the manufacturer's recommendations. The PFH panels shall be supported directly on a foundation that is continuous across the entire length of the braced wall line. This foundation shall be reinforced with not less than one No. 4 bar top and bottom. Where the continuous foundation is required to have a depth greater than 12 inches (305 mm), a minimum 12-inch by 12-inch (305 mm by 305 mm) continuous footing or turned-down slab edge is permitted at door openings in the braced wall line. This continuous footing or turned-down slab edge shall be reinforced with not less than one No. 4 bar top and bottom. This reinforcement shall be lapped not less than 15 inches (381 mm) with the reinforcement required in the continuous foundation located directly under the braced wall line.

Where a PFH is installed at the first *story* of two-story buildings, each panel shall have a length of not less than 24 inches (610 mm).

2308.6.6 Cripple wall bracing. Cripple walls shall be braced in accordance with Section 2308.6.6.1 or 2308.6.6.2.

2308.6.6.1 Cripple wall bracing in Seismic Design Categories A, B and C. For the purposes of this section, cripple walls in *Seismic Design Categories* A, B and C having a stud height exceeding 14 inches (356 mm) shall be considered a *story* and shall be braced in accordance with Table 2308.6.1. Spacing of edge nailing for required cripple wall bracing shall not exceed 6 inches (152 mm) on center along the foundation plate and the top plate of the cripple wall. Nail size, nail spacing for field nailing and more restrictive boundary nailing requirements shall be as required elsewhere in the code for the specific bracing material used.

2308.6.6.2 Cripple wall bracing in Seismic Design Categories D and E. For the purposes of this section, cripple walls in *Seismic Design Categories* D and E having a stud height exceeding 14 inches (356 mm) shall be considered a *story* and shall be braced in accordance with Table 2308.6.1. Where interior braced wall lines occur without a continuous foundation below, the length of parallel exterior cripple wall bracing shall be one and one-half times the lengths required by Table 2308.6.1. Where the cripple wall sheathing type used is Method WSP or DWB and this additional length of bracing cannot be provided, the capacity of WSP or DWB sheathing shall be increased by reducing the spacing of fasteners along the perimeter of each piece of sheathing to 4 inches (102 mm) on center.

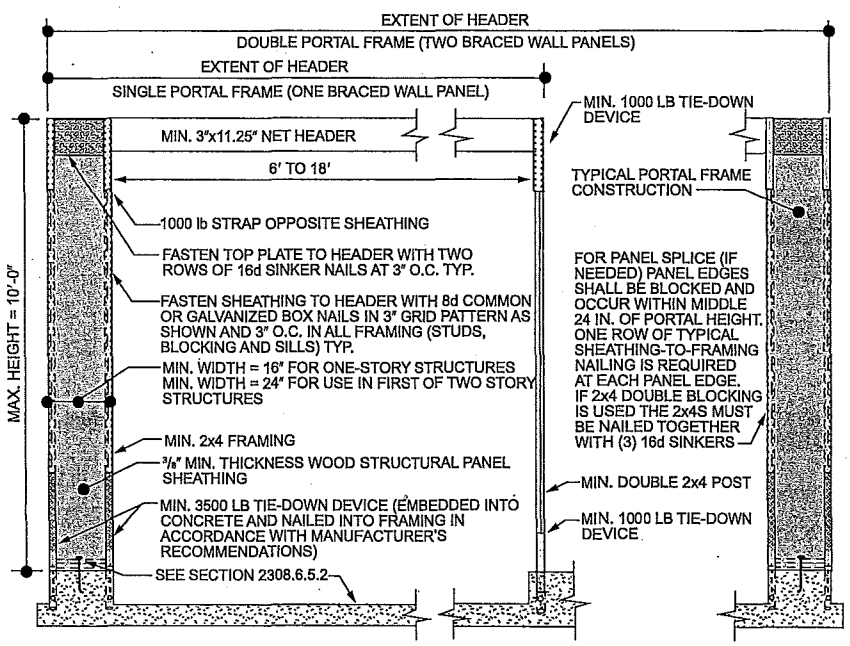

For SI: 1 inch = 25.4 mm, 1 foot = 304.8 mm, 1 pound = 4.448 N.

FIGURE 2308.6.5.2
PORTAL FRAME WITH HOLD-DOWNS (PFH)

2308.6.7 Connections of braced wall panels. *Braced wall panel* joints shall occur over studs or blocking. *Braced wall panels* shall be fastened to studs, top and bottom plates and at panel edges. *Braced wall panels* shall be applied to nominal 2-inch-wide [actual $1^1/_2$-inch (38 mm)] or larger stud framing.

2308.6.7.1 Bottom plate connection. *Braced wall line* bottom plates shall be connected to joists or full-depth blocking below in accordance with Table 2304.10.1, or to foundations in accordance with Section 2308.6.7.3.

2308.6.7.2 Top plate connection. Where joists or rafters are used, *braced wall line* top plates shall be fastened over the full length of the braced wall line to joists, rafters, rim boards or full-depth blocking above in accordance with Table 2304.10.1, as applicable, based on the orientation of the joists or rafters to the *braced wall line*. Blocking shall be not less than 2 inches (51 mm) in nominal thickness and shall be fastened to the *braced wall line* top plate as specified in Table 2304.10.1. Notching or drilling of holes in blocking in accordance with the requirements of Section 2308.4.2.4 or 2308.7.4 shall be permitted.

At exterior gable end walls, *braced wall panel* sheathing in the top *story* shall be extended and fastened to the roof framing where the spacing between parallel exterior braced wall lines is greater than 50 feet (15 240 mm).

Where roof trusses are used and are installed perpendicular to an exterior *braced wall line*, lateral forces shall be transferred from the roof diaphragm to the braced wall over the full length of the *braced wall line* by blocking of the ends of the trusses or by other *approved* methods providing equivalent lateral force transfer. Blocking shall be not less than 2 inches (51 mm) in nominal thickness and equal to the depth of the truss at the wall line and shall be fastened to the braced wall line top plate as specified in Table 2304.10.1. Notching or drilling of holes in blocking in accordance with the requirements of Section 2308.4.2.4 or 2308.7.4 shall be permitted.

Exception: Where the roof sheathing is greater than $9^1/_4$ inches (235 mm) above the top plate, solid blocking is not required where the framing members are connected using one of the following methods:

1. In accordance with Figure 2308.6.7.2(1).
2. In accordance with Figure 2308.6.7.2(2).
3. Full-height engineered blocking panels designed for values listed in AWC WFCM.
4. A design in accordance with accepted engineering methods.

2308.6.7.3 Sill anchorage. Where foundations are required by Section 2308.6.8, braced wall line sills shall be anchored to concrete or masonry foundations. Such anchorage shall conform to the requirements of Section 2308.3. The anchors shall be distributed along the length of the braced wall line. Other anchorage devices having equivalent capacity are permitted.

2308.6.7.4 Anchorage to all-wood foundations. Where all-wood foundations are used, the force transfer from the *braced wall lines* shall be determined based on

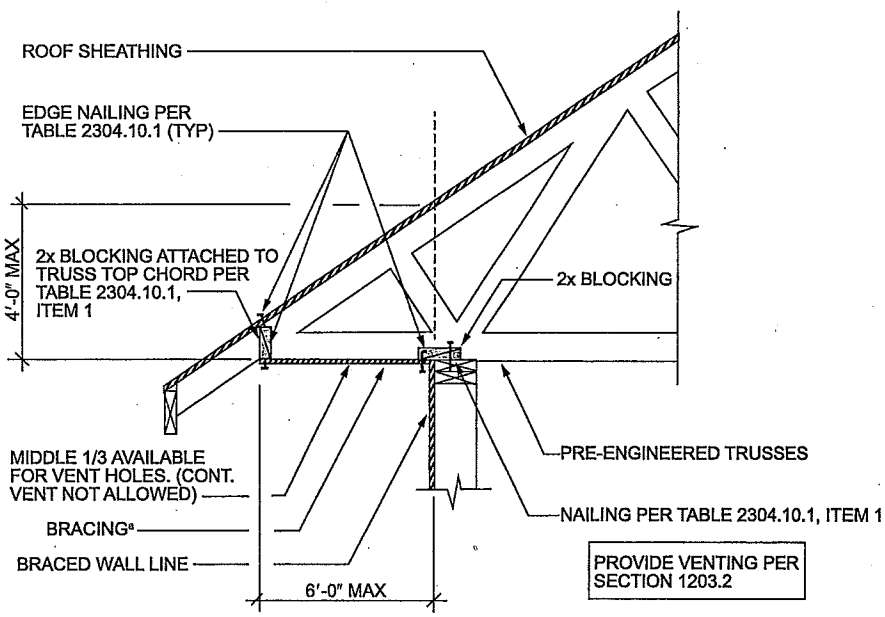

a. Methods of bracing shall be as described in Table 2308.6.3(1) DWB, WSP, SFB, GB, PBS, PCP or HPS.

For SI: 1 foot = 304.8 mm.

FIGURE 2308.6.7.2(1)
BRACED WALL LINE TOP PLATE CONNECTION

2102

calculation and shall have a capacity that is not less than the connections required by Section 2308.3.

2308.6.8 Braced wall line and diaphragm support. *Braced wall lines* and floor and roof diaphragms shall be supported in accordance with this section.

2308.6.8.1 Foundation requirements. *Braced wall lines* shall be supported by continuous foundations.

Exception: For structures with a maximum plan dimension not more than 50 feet (15 240 mm), continuous foundations are required at exterior walls only.

For structures in *Seismic Design Categories* D and E, exterior *braced wall panels* shall be in the same plane vertically with the foundation or the portion of the structure containing the offset shall be designed in accordance with accepted engineering practice and Section 2308.1.1.

Exceptions:

1. Exterior *braced wall panels* shall be permitted to be located not more than 4 feet (1219 mm) from the foundation below where supported by a floor constructed in accordance with all of the following:
   - 1.1. Cantilevers or setbacks shall not exceed four times the nominal depth of the floor joists.
   - 1.2. Floor joists shall be 2 inches by 10 inches (51 mm by 254 mm) or larger and spaced not more than 16 inches (406 mm) on center.
   - 1.3. The ratio of the back span to the cantilever shall be not less than 2 to 1.
   - 1.4. Floor joists at ends of *braced wall panels* shall be doubled.
   - 1.5. A continuous rim joist shall be connected to the ends of cantilevered joists. The rim joist is permitted to be spliced using a metal tie not less than 0.058 inch (1.47 mm) (16 galvanized gage) and $1^1/_2$ inches (38 mm) in width fastened with six 16d common nails on each side. The metal tie shall have a yield stress not less than 33,000 psi (227 MPa).
   - 1.6. Joists at setbacks or the end of cantilevered joists shall not carry gravity loads from more than a single *story* having uniform wall and roof loads nor carry the reactions from headers having a span of 8 feet (2438 mm) or more.
2. The end of a required *braced wall panel* shall be allowed to extend not more than 1 foot (305 mm) over an opening in the wall below. This requirement is applicable to *braced wall panels* offset in plane and *braced wall panels* offset out of plane as permitted by Exception 1. *Braced wall panels* are permitted to extend over an opening not more than 8 feet (2438 mm) in width where the header is a 4-inch by 12-inch (102 mm by 305 mm) or larger member.

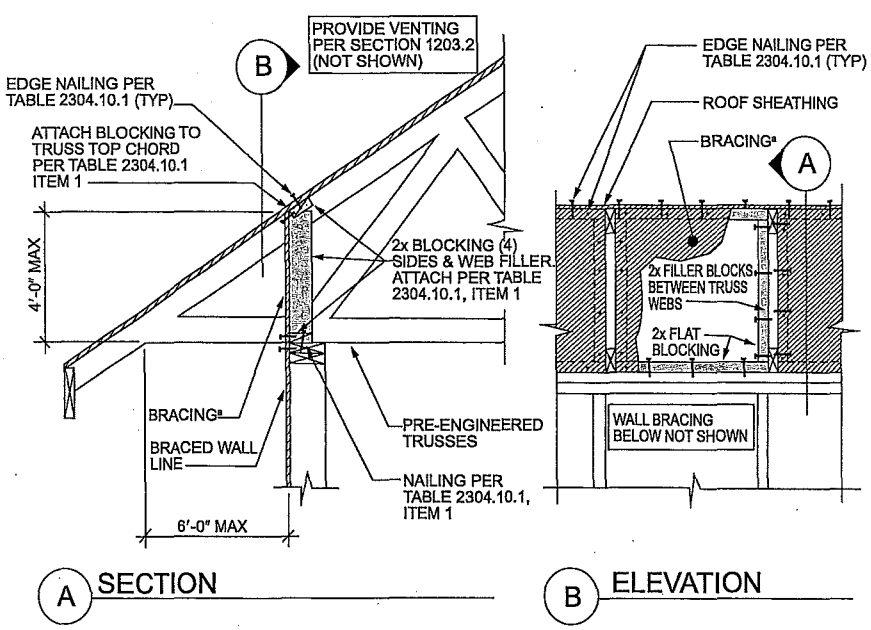

a. Methods of bracing shall be as described in Table 2308.6.3(1) DWB, WSP, SFB, GB, PBS, PCP or HPS.

For SI: 1 foot = 304.8 mm.

FIGURE 2308.6.7.2(2)
BRACED WALL PANEL TOP PLATE CONNECTION

2308.6.8.2 Floor and roof diaphragm support in Seismic Design Categories D and E. In structures assigned to *Seismic Design Categories* D or E, floor and roof diaphragms shall be laterally supported by *braced wall lines* on all edges and connected in accordance with Section 2308.6.7 [see Figure 2308.6.8.2(1)].

Exception: Portions of roofs or floors that do not support *braced wall panels* above are permitted to extend up to 6 feet (1829 mm) beyond a *braced wall line* [see Figure 2308.6.8.2(2)] provided that the framing members are connected to the *braced wall line* below in accordance with Section 2308.6.7.

2308.6.8.3 Stepped footings in Seismic Design Categories B, C, D and E. In *Seismic Design Categories* B, C, D and E, where the height of a required *braced wall panel* extending from foundation to floor above varies more than 4 feet (1219 mm), the following construction shall be used:

1. Where the bottom of the footing is stepped and the lowest floor framing rests directly on a sill bolted to the footings, the sill shall be anchored as required in Section 2308.3.
2. Where the lowest floor framing rests directly on a sill bolted to a footing not less than 8 feet (2438 mm) in length along a line of bracing, the line shall be considered to be braced. The double plate of the cripple stud wall beyond the segment of footing extending to the lowest framed floor shall be spliced to the sill plate with metal ties, one on each side of the sill and plate. The metal

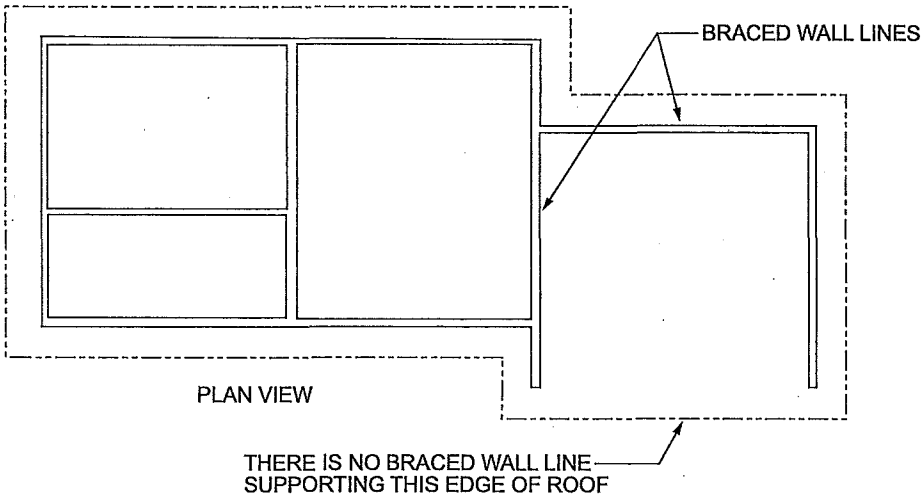

FIGURE 2308.6.8.2(1)
ROOF IN SDC D OR E NOT SUPPORTED ON ALL EDGES

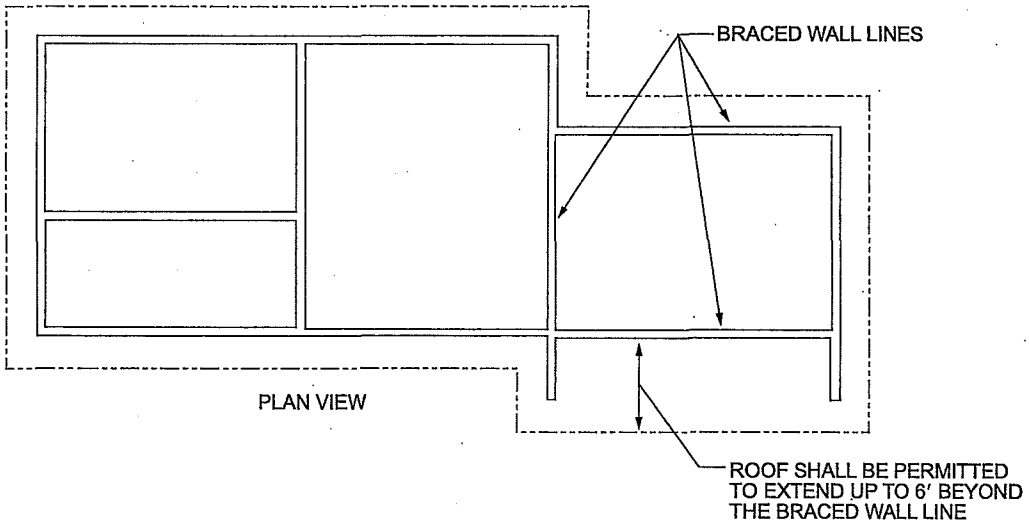

For SI: 1 foot = 304.8 mm.

FIGURE 2308.6.8.2(2)
ROOF EXTENSION IN SDC D OR E BEYOND BRACED WALL LINE

ties shall be not less than 0.058 inch [1.47 mm (16 galvanized gage)] by $1^1/_2$ inches (38 mm) in width by 48 inches (1219 mm) with eight 16d common nails on each side of the splice location (see Figure 2308.6.8.3). The metal tie shall have a yield stress not less than 33,000 pounds per square inch (psi) (227 MPa).

3. Where cripple walls occur between the top of the footing and the lowest floor framing, the bracing requirements for a *story* shall apply.

2308.6.9 Attachment of sheathing. Fastening of *braced wall panel* sheathing shall be not less than that prescribed in Tables 2308.6.1 and 2304.10.1. Wall sheathing shall not be attached to framing members by adhesives.

2308.6.10 Limitations of concrete or masonry veneer. Concrete or masonry veneer shall comply with Chapter 14 and this section.

2308.6.10.1 Limitations of concrete or masonry veneer in Seismic Design Category B or C. In *Seismic Design Categories* B and C, concrete or masonry walls and stone or masonry veneer shall not extend above a basement.

Exceptions:

1. In structures assigned to *Seismic Design Category* B, stone and masonry veneer is permitted to be used in the first two *stories above grade plane* or the first three *stories above grade plane* where the lowest *story* has concrete or masonry walls, provided that wood structural panel wall bracing is used and the length of bracing provided is one and one-half times the required length specified in Table 2308.6.1.
2. Stone and masonry veneer is permitted to be used in the first *story above grade plane* or the first two *stories above grade plane* where the lowest *story* has concrete or masonry walls.
3. Stone and masonry veneer is permitted to be used in both *stories* of buildings with two *stories above grade plane*, provided the following criteria are met:
   - 3.1. Type of brace in accordance with Section 2308.6.1 shall be WSP and the allowable shear capacity in accordance with Section 2306.3 shall be not less than 350 plf (5108 N/m).
   - 3.2. *Braced wall panels* in the second *story* shall be located in accordance with Section 2308.6.1 and not more than 25 feet (7620 mm) on center, and the total length of *braced wall panels* shall be not less than 25 percent of the *braced wall line* length. *Braced wall panels* in the first *story* shall be located in accordance with Section 2308.6.1 and not more than 25 feet (7620 mm) on center, and the total length of *braced wall panels* shall be not less than 45 percent of the *braced wall line* length.
   - 3.3. Hold-down connectors with an allowable capacity of 2,000 pounds (8896 N) shall be provided at the ends of each *braced wall panel* for the second *story* to the first *story* connection. Hold-down connectors with an allowable capacity of 3,900 pounds (17 347 N) shall be provided at the ends of each *braced wall panel* for the first *story* to the foundation connection. In all cases, the hold-down connector force shall be transferred to the foundation.
   - 3.4. Cripple walls shall not be permitted.

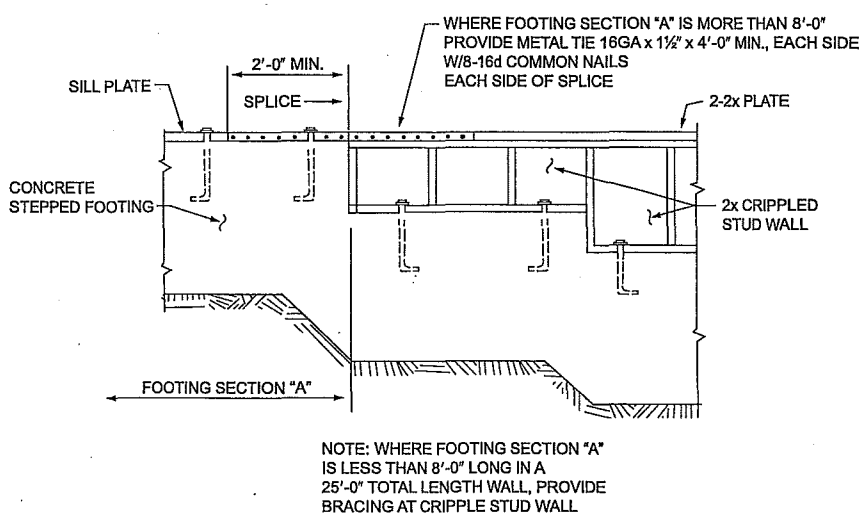

For SI: 1 inch = 25.4 mm, 1 foot = 304.8 mm.

FIGURE 2308.6.8.3
STEPPED FOOTING CONNECTION DETAILS

2308.6.10.2 Limitations of concrete or masonry in Seismic Design Categories D and E. In *Seismic Design Categories* D and E, concrete or masonry walls and stone or masonry veneer shall not extend above a basement.

Exception: In structures assigned to *Seismic Design Category* D, stone and masonry veneer is permitted to be used in the first *story above grade plane*, provided the following criteria are met:

1. Type of brace in accordance with Section 2308.6.1 shall be WSP and the allowable shear capacity in accordance with Section 2306.3 shall be not less than 350 plf (5108 N/m).
2. The *braced wall panels* in the first *story* shall be located at each end of the *braced wall line* and not more than 25 feet (7620 mm) on center, and the total length of *braced wall panels* shall be not less than 45 percent of the *braced wall line* length.
3. Hold-down connectors shall be provided at the ends of braced walls for the first floor to foundation with an allowable capacity of 2,100 pounds (9341 N).
4. Cripple walls shall not be permitted.

2308.7 Roof and ceiling framing. The framing details required in this section apply to roofs having a slope of not less than three units vertical in 12 units horizontal (25-percent slope). Where the roof slope is less than three units vertical in 12 units horizontal (25-percent slope), members supporting rafters and ceiling joists such as ridge board, hips and valleys shall be designed as beams.

2308.7.1 Ceiling joist spans. Spans for ceiling joists shall be in accordance with Table 2308.7.1(1) or 2308.7.1(2). For other grades and species, and other loading conditions, refer to the AWC STJR.

2308.7.2 Rafter spans. Spans for rafters shall be in accordance with Table 2308.7.2(1), 2308.7.2(2), 2308.7.2(3), 2308.7.2(4), 2308.7.2(5) or 2308.7.2(6). For other grades and species and other loading conditions, refer to the AWC STJR. The span of each rafter shall be measured along the horizontal projection of the rafter.

2308.7.3 Ceiling joist and rafter framing. Rafters shall be framed directly opposite each other at the ridge. There shall be a ridge board not less than 1-inch (25 mm) nominal thickness at ridges and not less in depth than the cut end of the rafter. At valleys and hips, there shall be a single valley or hip rafter not less than 2-inch (51 mm) nominal thickness and not less in depth than the cut end of the rafter.

2308.7.3.1 Ceiling joist and rafter connections. Ceiling joists and rafters shall be nailed to each other and the assembly shall be nailed to the top wall plate in accordance with Tables 2304.10.1 and 2308.7.5. Ceiling joists shall be continuous or securely joined where they meet over interior partitions and be fastened to adjacent rafters in accordance with Tables 2304.10.1 and 2308.7.3.1 to provide a continuous rafter tie across the building where such joists are parallel to the rafters. Ceiling joists shall have a bearing surface of not less than $1^1/_2$ inches (38 mm) on the top plate at each end.

Where ceiling joists are not parallel to rafters, an equivalent rafter tie shall be installed in a manner to provide a continuous tie across the building, at a spacing of not more than 4 feet (1219 mm) on center. The connections shall be in accordance with Tables 2308.7.3.1 and 2304.10.1, or connections of equivalent capacities shall be provided. Where ceiling joists or rafter ties are not provided at the top of the rafter support walls, the ridge formed by these rafters shall also be supported by a girder conforming to Section 2308.8. Rafter ties shall be spaced not more than 4 feet (1219 mm) on center.

Rafter tie connections shall be based on the equivalent rafter spacing in Table 2308.7.3.1. Rafter-to-ceiling joist connections and rafter tie connections shall be of sufficient size and number to prevent splitting from nailing.

Roof framing member connection to braced wall lines shall be in accordance with Section 2308.6.7.2.

2308.7.4 Notches and holes. Notching at the ends of rafters or ceiling joists shall not exceed one-fourth the depth. Notches in the top or bottom of the rafter or ceiling joist shall not exceed one-sixth the depth and shall not be located in the middle one-third of the span, except that a notch not more than one-third of the depth is permitted in the top of the rafter or ceiling joist not further from the face of the support than the depth of the member. Holes bored in rafters or ceiling joists shall not be within 2 inches (51 mm) of the top and bottom and their diameter shall not exceed one-third the depth of the member.

2308.7.5 Wind uplift. The roof construction shall have rafter and truss ties to the wall below. Resultant uplift loads shall be transferred to the foundation using a continuous load path. The rafter or truss to wall connection shall comply with Tables 2304.10.1 and 2308.7.5.

2308.7.6 Framing around openings. Trimmer and header rafters shall be doubled, or of lumber of equivalent cross section, where the span of the header exceeds 4 feet (1219 mm). The ends of header rafters that are more than 6 feet (1829 mm) in length shall be supported by framing anchors or rafter hangers unless bearing on a beam, partition or wall.

2308.7.6.1 Openings in roof diaphragms in Seismic Design Categories B, C, D and E. In buildings classified as *Seismic Design Category* B, C, D or E. openings in horizontal diaphragms with a dimension that is greater than 4 feet (1219 mm) shall be constructed with metal ties and blocking in accordance with this section and Figure 2308.4.4.1(1). Metal ties shall be not less than 0.058 inch [1.47 mm (16 galvanized gage)] in thickness by $1^1/_2$ inches (38 mm) in width and shall have a yield stress not less than 33,000 psi (227 Mpa). Blocking shall extend not less than the dimension of the opening in the direction of the tie and blocking. Ties

shall be attached to blocking in accordance with the manufacturer's instructions but with not less than eight 16d common nails on each side of the header-joist intersection.

2308.7.7 Purlins. Purlins to support roof loads are permitted to be installed to reduce the span of rafters within allowable limits and shall be supported by struts to bearing walls. The maximum span of 2-inch by 4-inch (51 mm by 102 mm) purlins shall be 4 feet (1219 mm). The maximum span of the 2-inch by 6-inch (51 mm by 152 mm) purlin shall be 6 feet (1829 mm), but in no case shall the purlin be smaller than the supported rafter. Struts shall be not less than 2-inch by 4-inch (51 mm by 102 mm) members. The unbraced length of struts shall not exceed 8 feet (2438 mm) and the slope of the struts shall be not less than 45 degrees (0.79 rad) from the horizontal.

2308.7.8 Blocking. Roof rafters and ceiling joists shall be supported laterally to prevent rotation and lateral displacement in accordance with Section 2308.4.6 and connected to braced wall lines in accordance with Section 2308.6.7.2.

2308.7.9 Engineered wood products. Prefabricated wood I-joists, structural glued-laminated timber and structural composite lumber shall not be notched or drilled except where permitted by the manufacturer's recommendations or where the effects of such alterations are specifically considered in the design of the member by a *registered design professional.*

2308.7.10 Roof sheathing. Roof sheathing shall be in accordance with Tables 2304.8(3) and 2304.8(5) for wood structural panels, and Tables 2304.8(1) and 2304.8(2) for lumber and shall comply with Section 2304.8.2.

2308.7.11 Joints. Joints in lumber sheathing shall occur over supports unless *approved* end-matched lumber is used, in which case each piece shall bear on at least two supports.

2308.7.12 Roof planking. Planking shall be designed in accordance with the general provisions of this code.

In lieu of such design, 2-inch (51 mm) tongue-and groove planking is permitted in accordance with Table 2308.7.12. Joints in such planking are permitted to be randomly spaced, provided the system is applied to not less than three continuous spans, planks are center matched and end matched or splined, each plank bears on at least one support, and joints are separated by not less than 24 inches (610 mm) in adjacent pieces.

2308.7.13 Wood trusses. Wood trusses shall be designed in accordance with Section 2303.4. Connection to braced wall lines shall be in accordance with Section 2308.6.7.2.

2308.7.14 Attic ventilation. For *attic* ventilation, see Section 1203.2.

TABLE 2308.7.5
REQUIRED RATING OF APPROVED UPLIFT CONNECTORS (pounds)[a, b, c, e, f, g, h]

NOMINAL DESIGN WIND SPEED, V_{asd}[i]	ROOF SPAN (feet)							OVERHANGS (pounds/feet)[d]
	12	20	24	28	32	36	40	
85	-72	-120	-145	-169	-193	-217	-241	-38.55
90	-91	-151	-181	-212	-242	-272	-302	-43.22
100	-131	-281	-262	-305	-349	-393	-436	-53.36
110	-175	-292	-351	-409	-467	-526	-584	-64.56

For SI: 1 inch = 25.4 mm, 1 foot = 304.8 mm, 1 mile per hour = 1.61 km/hr, 1 pound = 0.454 Kg, 1 pound/foot = 14.5939 N/m.

a. The uplift connection requirements are based on a 30-foot mean roof height located in Exposure B. For Exposure C or D and for other mean roof heights, multiply the above loads by the adjustment coefficients below.

	Mean Roof Height (feet)									
EXPOSURE	15	20	25	30	35	40	45	50	55	60
B	1.00	1.00	1.00	1.00	1.05	1.09	1.12	1.16	1.19	1.22
C	1.21	1.29	1.35	1.40	1.45	1.49	1.53	1.56	1.59	1.62
D	1.47	1.55	1.61	1.66	1.70	1.74	1.78	1.81	1.84	1.87

b. The uplift connection requirements are based on the framing being spaced 24 inches on center. Multiply by 0.67 for framing spaced 16 inches on center and multiply by 0.5 for framing spaced 12 inches on center.

c. The uplift connection requirements include an allowance for 10 pounds of dead load.

d. The uplift connection requirements do not account for the effects of overhangs. The magnitude of the above loads shall be increased by adding the overhang loads found in the table. The overhang loads are also based on framing spaced 24 inches on center. The overhang loads given shall be multiplied by the overhang projection and added to the roof uplift value in the table.

e. The uplift connection requirements are based upon wind loading on end zones as defined in Figure 28.6.3 of ASCE 7. Connection loads for connections located a distance of 20 percent of the least horizontal dimension of the building from the corner of the building are permitted to be reduced by multiplying the table connection value by 0.7 and multiplying the overhang load by 0.8.

f. For wall-to-wall and wall-to-foundation connections, the capacity of the uplift connector is permitted to be reduced by 100 pounds for each full wall above. (For example, if a 500-pound rated connector is used on the roof framing, a 400-pound rated connector is permitted at the next floor level down).

g. Interpolation is permitted for intermediate values of V_{asd} and roof spans.

h. The rated capacity of approved tie-down devices is permitted to include up to a 60-percent increase for wind effects where allowed by material specifications.

i. V_{asd} shall be determined in accordance with Section 1609.3.1.

TABLE 2308.7.1(1)
CEILING JOIST SPANS FOR COMMON LUMBER SPECIES
(Uninhabitable Attics Without Storage, Live Load = 10 psf, L/Δ = 240)

CEILING JOIST SPACING (inches)	SPECIES AND GRADE		DEAD LOAD = 5 psf			
			2 × 4	2 × 6	2 × 8	2 × 10
			Maximum ceiling joist spans			
			(ft. - in.)	(ft. - in.)	(ft. - in.)	(ft. - in.)
12	Douglas Fir-Larch	SS	13-2	20-8	Note a	Note a
	Douglas Fir-Larch	#1	12-8	19-11	Note a	Note a
	Douglas Fir-Larch	#2	12-5	19-6	25-8	Note a
	Douglas Fir-Larch	#3	10-10	15-10	20-1	24-6
	Hem-Fir	SS	12-5	19-6	25-8	Note a
	Hem-Fir	#1	12-2	19-1	25-2	Note a
	Hem-Fir	#2	11-7	18-2	24-0	Note a
	Hem-Fir	#3	10-10	15-10	20-1	24-6
	Southern Pine	SS	12-11	20-3	Note a	Note a
	Southern Pine	#1	12-5	19-6	25-8	Note a
	Southern Pine	#2	11-10	18-8	24-7	Note a
	Southern Pine	#3	10-1	14-11	18-9	22-9
	Spruce-Pine-Fir	SS	12-2	19-1	25-2	Note a
	Spruce-Pine-Fir	#1	11-10	18-8	24-7	Note a
	Spruce-Pine-Fir	#2	11-10	18-8	24-7	Note a
	Spruce-Pine-Fir	#3	10-10	15-10	20-1	24-6
16	Douglas Fir-Larch	SS	11-11	18-9	24-8	Note a
	Douglas Fir-Larch	#1	11-6	18-1	23-10	Note a
	Douglas Fir-Larch	#2	11-3	17-8	23-0	Note a
	Douglas Fir-Larch	#3	9-5	13-9	17-5	21-3
	Hem-Fir	SS	11-3	17-8	23-4	Note a
	Hem-Fir	#1	11-0	17-4	22-10	Note a
	Hem-Fir	#2	10-6	16-6	21-9	Note a
	Hem-Fir	#3	9-5	13-9	17-5	21-3
	Southern Pine	SS	11-9	18-5	24-3	Note a
	Southern Pine	#1	11-3	17-8	23-4	Note a
	Southern Pine	#2	10-9	16-11	21-7	25-7
	Southern Pine	#3	8-9	12-11	16-3	19-9
	Spruce-Pine-Fir	SS	11-0	17-4	22-10	Note a
	Spruce-Pine-Fir	#1	10-9	16-11	22-4	Note a
	Spruce-Pine-Fir	#2	10-9	16-11	22-4	Note a
	Spruce-Pine-Fir	#3	9-5	13-9	17-5	21-3

(continued)

TABLE 2308.7.1(1)—continued
CEILING JOIST SPANS FOR COMMON LUMBER SPECIES
(Uninhabitable Attics Without Storage, Live Load = 10 psf, L/Δ = 240)

CEILING JOIST SPACING (inches)	SPECIES AND GRADE		DEAD LOAD = 5 psf			
			2 × 4	2 × 6	2 × 8	2 × 10
			Maximum ceiling joist spans			
			(ft. - in.)	(ft. - in.)	(ft. - in.)	(ft. - in.)
19.2	Douglas Fir-Larch	SS	11-3	17-8	23-3	Note a
	Douglas Fir-Larch	#1	10-10	17-0	22-5	Note a
	Douglas Fir-Larch	#2	10-7	16-7	21-0	25-8
	Douglas Fir-Larch	#3	8-7	12-6	15-10	19-5
	Hem-Fir	SS	10-7	16-8	21-11	Note a
	Hem-Fir	#1	10-4	16-4	21-6	Note a
	Hem-Fir	#2	9-11	15-7	20-6	25-3
	Hem-Fir	#3	8-7	12-6	15-10	19-5
	Southern Pine	SS	11-0	17-4	22-10	Note a
	Southern Pine	#1	10-7	16-8	22-0	Note a
	Southern Pine	#2	10-2	15-7	19-8	23-5
	Southern Pine	#3	8-0	11-9	14-10	18-0
	Spruce-Pine-Fir	SS	10-4	16-4	21-6	Note a
	Spruce-Pine-Fir	#1	10-2	15-11	21-0	25-8
	Spruce-Pine-Fir	#2	10-2	15-11	21-0	25-8
	Spruce-Pine-Fir	#3	8-7	12-6	15-10	19-5
24	Douglas Fir-Larch	SS	10-5	16-4	21-7	Note a
	Douglas Fir-Larch	#1	10-0	15-9	20-1	24-6
	Douglas Fir-Larch	#2	9-10	14-10	18-9	22-11
	Douglas Fir-Larch	#3	7-8	11-2	14-2	17-4
	Hem-Fir	SS	9-10	15-6	20-5	Note a
	Hem-Fir	#1	9-8	15-2	19-7	23-11
	Hem-Fir	#2	9-2	14-5	18-6	22-7
	Hem-Fir	#3	7-8	11-2	14-2	17-4
	Southern Pine	SS	10-3	16-1	21-2	Note a
	Southern Pine	#1	9-10	15-6	20-5	24-0
	Southern Pine	#2	9-3	13-11	17-7	20-11
	Southern Pine	#3	7-2	10-6	13-3	16-1
	Spruce-Pine-Fir	SS	9-8	15-2	19-11	25-5
	Spruce-Pine-Fir	#1	9-5	14-9	18-9	22-11
	Spruce-Pine-Fir	#2	9-5	14-9	18-9	22-11
	Spruce-Pine-Fir	#3	7-8	11-2	14-2	17-4

Check sources for availability of lumber in lengths greater than 20 feet.
For SI: 1 inch = 25.4 mm, 1 foot = 304.8 mm, 1 pound per square foot = 0.0479 kPa.
a. Span exceeds 26 feet in length.

TABLE 2308.7.1(2)
CEILING JOIST SPANS FOR COMMON LUMBER SPECIES
(Uninhabitable Attics With Limited Storage, Live Load = 20 psf, L/Δ = 240)

CEILING JOIST SPACING (inches)	SPECIES AND GRADE		DEAD LOAD = 10 psf			
			2 × 4	2 × 6	2 × 8	2 × 10
			Maximum ceiling joist spans			
			(ft. - in.)	(ft. - in.)	(ft. - in.)	(ft. - in.)
12	Douglas Fir-Larch	SS	10-5	16-4	21-7	Note a
	Douglas Fir-Larch	#1	10-0	15-9	20-1	24-6
	Douglas Fir-Larch	#2	9-10	14-10	18-9	22-11
	Douglas Fir-Larch	#3	7-8	11-2	14-2	17-4
	Hem-Fir	SS	9-10	15-6	20-5	Note a
	Hem-Fir	#1	9-8	15-2	19-7	23-11
	Hem-Fir	#2	9-2	14-5	18-6	22-7
	Hem-Fir	#3	7-8	11-2	14-2	17-4
	Southern Pine	SS	10-3	16-1	21-2	Note a
	Southern Pine	#1	9-10	15-6	20-5	24-0
	Southern Pine	#2	9-3	13-11	17-7	20-11
	Southern Pine	#3	7-2	10-6	13-3	16-1
	Spruce-Pine-Fir	SS	9-8	15-2	19-11	25-5
	Spruce-Pine-Fir	#1	9-5	14-9	18-9	22-11
	Spruce-Pine-Fir	#2	9-5	14-9	18-9	22-11
	Spruce-Pine-Fir	#3	7-8	11-2	14-2	17-4
16	Douglas Fir-Larch	SS	9-6	14-11	19-7	25-0
	Douglas Fir-Larch	#1	9-1	13-9	17-5	21-3
	Douglas Fir-Larch	#2	8-9	12-10	16-3	19-10
	Douglas Fir-Larch	#3	6-8	9-8	12-4	15-0
	Hem-Fir	SS	8-11	14-1	18-6	23-8
	Hem-Fir	#1	8-9	13-5	16-10	20-8
	Hem-Fir	#2	8-4	12-8	16-0	19-7
	Hem-Fir	#3	6-8	9-8	12-4	15-0
	Southern Pine	SS	9-4	14-7	19-3	24-7
	Southern Pine	#1	8-11	14-0	17-9	20-9
	Southern Pine	#2	8-0	12-0	15-3	18-1
	Southern Pine	#3	6-2	9-2	11-6	14-0
	Spruce-Pine-Fir	SS	8-9	13-9	18-1	23-1
	Spruce-Pine-Fir	#1	8-7	12-10	16-3	19-10
	Spruce-Pine-Fir	#2	8-7	12-10	16-3	19-10
	Spruce-Pine-Fir	#3	6-8	9-8	12-4	15-0

(continued)

TABLE 2308.7.1(2)—continued
CEILING JOIST SPANS FOR COMMON LUMBER SPECIES
(Uninhabitable Attics With Limited Storage, Live Load = 20 psf, L/Δ = 240)

CEILING JOIST SPACING (inches)	SPECIES AND GRADE		DEAD LOAD = 10 psf			
			2 × 4	2 × 6	2 × 8	2 × 10
			Maximum ceiling joist spans			
			(ft. - in.)	(ft. - in.)	(ft. - in.)	(ft. - in.)
19.2	Douglas Fir-Larch	SS	8-11	14-0	18-5	23-4
	Douglas Fir-Larch	#1	8-7	12-6	15-10	19-5
	Douglas Fir-Larch	#2	8-0	11-9	14-10	18-2
	Douglas Fir-Larch	#3	6-1	8-10	11-3	13-8
	Hem-Fir	SS	8-5	13-3	17-5	22-3
	Hem-Fir	#1	8-3	12-3	15-6	18-11
	Hem-Fir	#2	7-10	11-7	14-8	17-10
	Hem-Fir	#3	6-1	8-10	11-3	13-8
	Southern Pine	SS	8-9	13-9	18-2	23-1
	Southern Pine	#1	8-5	12-9	16-2	18-11
	Southern Pine	#2	7-4	11-0	13-11	16-6
	Southern Pine	#3	5-8	8-4	10-6	12-9
	Spruce-Pine-Fir	SS	8-3	12-11	17-1	21-8
	Spruce-Pine-Fir	#1	8-0	11-9	14-10	18-2
	Spruce-Pine-Fir	#2	8-0	11-9	14-10	18-2
	Spruce-Pine-Fir	#3	6-1	8-10	11-3	13-8
24	Douglas Fir-Larch	SS	8-3	13-0	17-1	20-11
	Douglas Fir-Larch	#1	7-8	11-2	14-2	17-4
	Douglas Fir-Larch	#2	7-2	10-6	13-3	16-3
	Douglas Fir-Larch	#3	5-5	7-11	10-0	12-3
	Hem-Fir	SS	7-10	12-3	16-2	20-6
	Hem-Fir	#1	7-6	10-11	13-10	16-11
	Hem-Fir	#2	7-1	10-4	13-1	16-0
	Hem-Fir	#3	5-5	7-11	10-0	12-3
	Southern Pine	SS	8-1	12-9	16-10	21-6
	Southern Pine	#1	7-8	11-5	14-6	16-11
	Southern Pine	#2	6-7	9-10	12-6	14-9
	Southern Pine	#3	5-1	7-5	9-5	11-5
	Spruce-Pine-Fir	SS	7-8	12-0	15-10	19-5
	Spruce-Pine-Fir	#1	7-2	10-6	13-3	16-3
	Spruce-Pine-Fir	#2	7-2	10-6	13-3	16-3
	Spruce-Pine-Fir	#3	5-5	7-11	10-0	12-3

Check sources for availability of lumber in lengths greater than 20 feet.

For SI: 1 inch = 25.4 mm, 1 foot = 304.8 mm, 1 pound per square foot = 0.0479 kPa.

a. Span exceeds 26 feet in length.

TABLE 2308.7.2(1)
RAFTER SPANS FOR COMMON LUMBER SPECIES
(Roof Live Load = 20 psf, Ceiling Not Attached to Rafters, L/Δ = 180)

RAFTER SPACING (inches)	SPECIES AND GRADE		DEAD LOAD = 10 psf					DEAD LOAD = 20 psf				
			2 × 4	2 × 6	2 × 8	2 × 10	2 × 12	2 × 4	2 × 6	2 × 8	2 × 10	2 × 12
			Maximum rafter spans[a]									
			(ft. - in.)	(ft. - in.)	(ft. - in.)	(ft. - in.)	(ft. - in.)	(ft. - in.)	(ft. - in.)	(ft. - in.)	(ft. - in.)	(ft. - in.)
12	Douglas Fir-Larch	SS	11-6	18-0	23-9	Note b	Note b	11-6	18-0	23-5	Note b	Note b
	Douglas Fir-Larch	#1	11-1	17-4	22-5	Note b	Note b	10-6	15-4	19-5	23-9	Note b
	Douglas Fir-Larch	#2	10-10	16-7	21-0	25-8	Note b	9-10	14-4	18-2	22-3	25-9
	Douglas Fir-Larch	#3	8-7	12-6	15-10	19-5	22-6	7-5	10-10	13-9	16-9	19-6
	Hem-Fir	SS	10-10	17-0	22-5	Note b	Note b	10-10	17-0	22-5	Note b	Note b
	Hem-Fir	#1	10 -7	16-8	21-10	Note b	Note b	10-3	14-11	18-11	23-2	Note b
	Hem-Fir	#2	10-1	15-11	20-8	25-3	Note b	9-8	14-2	17-11	21-11	25-5
	Hem-Fir	#3	8-7	12-6	15-10	19-5	22-6	7-5	10-10	13-9	16-9	19-6
	Southern Pine	SS	11-3	17-8	23-4	Note b	Note b	11-3	17-8	23-4	Note b	Note b
	Southern Pine	#1	10-10	17-0	22-5	26-0	26-0	10-6	15-8	19-10	23-2	Note b
	Southern Pine	#2	10-4	15-7	19-8	23-5	26-0	9-0	13-6	17-1	20-3	23-10
	Southern Pine	#3	8-0	11-9	14-10	18-0	21-4	6-11	10-2	12-10	15-7	18-6
	Spruce-Pine-Fir	SS	10-7	16-8	21-11	Note b	Note b	10-7	16-8	21-9	Note b	Note b
	Spruce-Pine-Fir	#1	10-4	16-3	21-0	25-8	Note b	9-10	14-4	18-2	22-3	25-9
	Spruce-Pine-Fir	#2	10-4	16-3	21-0	25-8	Note b	9-10	14-4	18-2	22-3	25-9
	Spruce-Pine-Fir	#3	8-7	12-6	15-10	19-5	22-6	7-5	10-10	13-9	16-9	19-6
16	Douglas Fir-Larch	SS	10-5	16-4	21-7	Note b	Note b	10-5	16-0	20-3	24-9	Note b
	Douglas Fir-Larch	#1	10-0	15-4	19-5	23-9	Note b	9-1	13-3	16-10	20-7	23-10
	Douglas Fir-Larch	#2	9-10	14-4	18-2	22-3	25-9	8-6	12-5	15-9	19-3	22-4
	Douglas Fir-Larch	#3	7-5	10-10	13-9	16-9	19-6	6-5	9-5	11-11	14-6	16-10
	Hem-Fir	SS	9-10	15-6	20-5	Note b	Note b	9-10	15-6	19-11	24-4	Note b
	Hem-Fir	#1	9-8	14-11	18-11	23-2	Note b	8-10	12-11	16-5	20-0	23-3
	Hem-Fir	#2	9-2	14-2	17-11	21-11	25-5	8-5	12-3	15-6	18-11	22-0
	Hem-Fir	#3	7-5	10-10	13-9	16-9	19-6	6-5	9-5	11-11	14-6	16-10
	Southern Pine	SS	10-3	16-1	21-2	Note b	Note b	10-3	16-1	21-2	25-7	Note b
	Southern Pine	#1	9-10	15-6	19-10	23-2	26-0	9-1	13-7	17-2	20-1	23-10
	Southern Pine	#2	9-0	13-6	17-1	20-3	23-10	7-9	11-8	14-9	17-6	20-8
	Southern Pine	#3	6-11	10-2	12-10	15-7	18-6	6-0	8-10	11-2	13-6	16-0
	Spruce-Pine-Fir	SS	9-8	15-2	19-11	25-5	Note b	9-8	14-10	18-10	23-0	Note b
	Spruce-Pine-Fir	#1	9-5	14-4	18-2	22-3	25-9	8-6	12-5	15-9	19-3	22-4
	Spruce-Pine-Fir	#2	9-5	14-4	18-2	22-3	25-9	8-6	12-5	15-9	19-3	22-4
	Spruce-Pine-Fir	#3	7-5	10-10	13-9	16-9	19-6	6-5	9-5	11-11	14-6	16-10
19.2	Douglas Fir-Larch	SS	9-10	15-5	20-4	25-11	Note b	9-10	14-7	18-6	22-7	Note b
	Douglas Fir-Larch	#1	9-5	14-0	17-9	21-8	25-2	8-4	12-2	15-4	18-9	21-9
	Douglas Fir-Larch	#2	8-11	13-1	16-7	20-3	23-6	7-9	11-4	14-4	17-7	20-4
	Douglas Fir-Larch	#3	6-9	9-11	12-7	15-4	17-9	5-10	8-7	10-10	13-3	15-5
	Hem-Fir	SS	9-3	14-7	19-2	24-6	Note b	9-3	14-4	18-2	22-3	25-9
	Hem-Fir	#1	9-1	13-8	17-4	21-1	24-6	8-1	11-10	15-0	18-4	21-3
	Hem-Fir	#2	8-8	12-11	16-4	20-0	23-2	7-8	11-2	14-2	17-4	20-1
	Hem-Fir	#3	6-9	9-11	12-7	15-4	17-9	5-10	8-7	10-10	13-3	15-5
	Southern Pine	SS	9-8	15-2	19-11	25-5	Note b	9-8	15-2	19-7	23-4	Note b
	Southern Pine	#1	9-3	14-3	18-1	21-2	25-2	8-4	12-4	15-8	18-4	21-9
	Southern Pine	#2	8-2	12-3	15-7	18-6	21-9	7-1	10-8	13-6	16-0	18-10
	Southern Pine	#3	6-4	9-4	11-9	14-3	16-10	5-6	8-1	10-2	12-4	14-7
	Spruce-Pine-Fir	SS	9-1	14-3	18-9	23-11	Note b	9-1	13-7	17-2	21-0	24-4
	Spruce-Pine-Fir	#1	8-10	13-1	16-7	20-3	23-6	7-9	11-4	14-4	17-7	20-4
	Spruce-Pine-Fir	#2	8-10	13-1	16-7	20-3	23-6	7-9	11-4	14-4	17-7	20-4
	Spruce-Pine-Fir	#3	6-9	9-11	12-7	15-4	17-9	5-10	8-7	10-10	13-3	15-5

(continued)

2112

TABLE 2308.7.2(1)—continued
RAFTER SPANS FOR COMMON LUMBER SPECIES
(Roof Live Load = 20 psf, Ceiling Not Attached to Rafters, L/Δ = 180)

RAFTER SPACING (inches)	SPECIES AND GRADE		DEAD LOAD = 10 psf					DEAD LOAD = 20 psf				
			2 × 4	2 × 6	2 × 8	2 × 10	2 × 12	2 × 4	2 × 6	2 × 8	2 × 10	2 × 12
			Maximum rafter spans[a]									
			(ft. - in.)	(ft. - in.)	(ft. - in.)	(ft. - in.)	(ft. - in.)	(ft. - in.)	(ft. - in.)	(ft. - in.)	(ft. - in.)	(ft. - in.)
24	Douglas Fir-Larch	SS	9-1	14-4	18-10	23-4	Note b	8-11	13-1	16-7	20-3	23-5
	Douglas Fir-Larch	#1	8-7	12-6	15-10	19-5	22-6	7-5	10-10	13-9	16-9	19-6
	Douglas Fir-Larch	#2	8-0	11-9	14-10	18-2	21-0	6-11	10-2	12-10	15-8	18-3
	Douglas Fir-Larch	#3	6-1	8-10	11-3	13-8	15-11	5-3	7-8	9-9	11-10	13-9
	Hem-Fir	SS	8-7	13-6	17-10	22-9	Note b	8-7	12-10	16-3	19-10	23-0
	Hem-Fir	#1	8-4	12-3	15-6	18-11	21-11	7-3	10-7	13-5	16-4	19-0
	Hem-Fir	#2	7-11	11-7	14-8	17-10	20-9	6-10	10-0	12-8	15-6	17-11
	Hem-Fir	#3	6-1	8-10	11-3	13-8	15-11	5-3	7-8	9-9	11-10	13-9
	Southern Pine	SS	8-11	14-1	18-6	23-8	Note b	8-11	13-10	17-6	20-10	24-8
	Southern Pine	#1	8-7	12-9	16-2	18-11	22-6	7-5	11-1	14-0	16-5	19-6
	Southern Pine	#2	7-4	11-0	13-11	16-6	19-6	6-4	9-6	12-1	14-4	16-10
	Southern Pine	#3	5-8	8-4	10-6	12-9	15-1	4-11	7-3	9-1	11-0	13-1
	Spruce-Pine-Fir	SS	8-5	13-3	17-5	21-8	25-2	8-4	12-2	15-4	18-9	21-9
	Spruce-Pine-Fir	#1	8-0	11-9	14-10	18-2	21-0	6-11	10-2	12-10	15-8	18-3
	Spruce-Pine-Fir	#2	8-0	11-9	14-10	18-2	21-0	6-11	10-2	12-10	15-8	18-3
	Spruce-Pine-Fir	#3	6-1	8-10	11-3	13-8	15-11	5-3	7-8	9-9	11-10	13-9

Check sources for availability of lumber in lengths greater than 20 feet.

For SI: 1 inch = 25.4 mm, 1 foot = 304.8 mm, 1 pound per square foot = 0.0479 kPa.

a. The tabulated rafter spans assume that ceiling joists are located at the bottom of the attic space or that some other method of resisting the outward push of the rafters on the bearing walls, such as rafter ties, is provided at that location. When ceiling joists or rafter ties are located higher in the attic space, the rafter spans shall be multiplied by the factors given below:

H_C/H_R	Rafter Span Adjustment Factor
1/3	0.67
1/4	0.76
1/5	0.83
1/6	0.90
1/7.5 or less	1.00

where:

H_C = Height of ceiling joists or rafter ties measured vertically above the top of the rafter support walls.

H_R = Height of roof ridge measured vertically above the top of the rafter support walls.

b. Span exceeds 26 feet in length.

TABLE 2308.7.2(2)
RAFTER SPANS FOR COMMON LUMBER SPECIES
(Roof Live Load = 20 psf, Ceiling Attached to Rafters, L/Δ = 240)

RAFTER SPACING (inches)	SPECIES AND GRADE		DEAD LOAD = 10 psf					DEAD LOAD = 20 psf				
			2 × 4	2 × 6	2 × 8	2 × 10	2 × 12	2 × 4	2 × 6	2 × 8	2 × 10	2 × 12
			Maximum rafter spans[a]									
			(ft. - in.)	(ft. - in.)	(ft. - in.)	(ft. - in.)	(ft. - in.)	(ft. - in.)	(ft. - in.)	(ft. - in.)	(ft. - in.)	(ft. - in.)
12	Douglas Fir-Larch	SS	10-5	16-4	21-7	Note b	Note b	10-5	16-4	21-7	Note b	Note b
	Douglas Fir-Larch	#1	10-0	15-9	20-10	Note b	Note b	10-0	15-4	19-5	23-9	Note b
	Douglas Fir-Larch	#2	9-10	15-6	20-5	25-8	Note b	9-10	14-4	18-2	22-3	25-9
	Douglas Fir-Larch	#3	8-7	12-6	15-10	19-5	22-6	7-5	10-10	13-9	16-9	19-6
	Hem-Fir	SS	9-10	15-6	20-5	Note b	Note b	9-10	15-6	20-5	Note b	Note b
	Hem-Fir	#1	9-8	15-2	19-11	25-5	Note b	9-8	14-11	18-11	23-2	Note b
	Hem-Fir	#2	9-2	14-5	19-0	24-3	Note b	9-2	14-2	17-11	21-11	25-5
	Hem-Fir	#3	8-7	12-6	15-10	19-5	22-6	7-5	10-10	13-9	16-9	19-6
	Southern Pine	SS	10-3	16-1	21-2	Note b	Note b	10-3	16-1	21-2	Note b	Note b
	Southern Pine	#1	9-10	15-6	20-5	26-0	26-0	9-10	15-6	19-10	23-2	26-0
	Southern Pine	#2	9-5	14-9	19-6	23-5	26-0	9-0	13-6	17-1	20-3	23-10
	Southern Pine	#3	8-0	11-9	14-10	18-0	21-4	6-11	10-2	12-10	15-7	18-6
	Spruce-Pine-Fir	SS	9-8	15-2	19-11	25-5	Note b	9-8	15-2	19-11	25-5	Note b
	Spruce-Pine-Fir	#1	9-5	14-9	19-6	24-10	Note b	9-5	14-4	18-2	22-3	25-9
	Spruce-Pine-Fir	#2	9-5	14-9	19-6	24-10	Note b	9-5	14-4	18-2	22-3	25-9
	Spruce-Pine-Fir	#3	8-7	12-6	15-10	19-5	22-6	7-5	10-10	13-9	16-9	19-6
16	Douglas Fir-Larch	SS	9-6	14-11	19-7	25-0	Note b	9-6	14-11	19-7	24-9	Note b
	Douglas Fir-Larch	#1	9-1	14-4	18-11	23-9	Note b	9-1	13-3	16-10	20-7	23-10
	Douglas Fir-Larch	#2	8-11	14-1	18-2	22-3	25-9	8-6	12-5	15-9	19-3	22-4
	Douglas Fir-Larch	#3	7-5	10-10	13-9	16-9	19-6	6-5	9-5	11-11	14-6	16-10
	Hem-Fir	SS	8-11	14-1	18-6	23-8	Note b	8-11	14-1	18-6	23-8	Note b
	Hem-Fir	#1	8-9	13-9	18-1	23-1	Note b	8-9	12-11	16-5	20-0	23-3
	Hem-Fir	#2	8-4	13-1	17-3	21-11	25-5	8-4	12-3	15-6	18-11	22-0
	Hem-Fir	#3	7-5	10-10	13-9	16-9	19-6	6-5	9-5	11-11	14-6	16-10
	Southern Pine	SS	9-4	14-7	19-3	24-7	Note b	9-4	14-7	19-3	24-7	Note b
	Southern Pine	#1	8-11	14-1	18-6	23-2	26-0	8-11	13-7	17-2	20-1	23-10
	Southern Pine	#2	8-7	13-5	17-1	20-3	23-10	7-9	11-8	14-9	17-6	20-8
	Southern Pine	#3	6-11	10-2	12-10	15-7	18-6	6-0	8-10	11-2	13-6	16-0
	Spruce-Pine-Fir	SS	8-9	13-9	18-1	23-1	Note b	8-9	13-9	18-1	23-0	Note b
	Spruce-Pine-Fir	#1	8-7	13-5	17-9	22-3	25-9	8-6	12-5	15-9	19-3	22-4
	Spruce-Pine-Fir	#2	8-7	13-5	17-9	22-3	25-9	8-6	12-5	15-9	19-3	22-4
	Spruce-Pine-Fir	#3	7-5	10-10	13-9	16-9	19-6	6-5	9-5	11-11	14-6	16-10
19.2	Douglas Fir-Larch	SS	8-11	14-0	18-5	23-7	Note b	8-11	14-0	18-5	22-7	Note b
	Douglas Fir-Larch	#1	8-7	13-6	17-9	21-8	25-2	8-4	12-2	15-4	18-9	21-9
	Douglas Fir-Larch	#2	8-5	13-1	16-7	20-3	23-6	7-9	11-4	14-4	17-7	20-4
	Douglas Fir-Larch	#3	6-9	9-11	12-7	15-4	17-9	5-10	8-7	10-10	13-3	15-5
	Hem-Fir	SS	8-5	13-3	17-5	22-3	Note b	8-5	13-3	17-5	22-3	25-9
	Hem-Fir	#1	8-3	12-11	17-1	21-1	24-6	8-1	11-10	15-0	18-4	21-3
	Hem-Fir	#2	7-10	12-4	16-3	20-0	23-2	7-8	11-2	14-2	17-4	20-1
	Hem-Fir	#3	6-9	9-11	12-7	15-4	17-9	5-10	8-7	10-10	13-3	15-5

(continued)

2114

TABLE 2308.7.2(2)—continued
RAFTER SPANS FOR COMMON LUMBER SPECIES
(Roof Live Load = 20 psf, Ceiling Attached to Rafters, L/Δ = 240)

RAFTER SPACING (inches)	SPECIES AND GRADE		DEAD LOAD = 10 psf					DEAD LOAD = 20 psf				
			2 × 4	2 × 6	2 × 8	2 × 10	2 × 12	2 × 4	2 × 6	2 × 8	2 × 10	2 × 12
			Maximum rafter spans[a]									
			(ft. - in.)	(ft. - in.)	(ft. - in.)	(ft. - in.)	(ft. - in.)	(ft. - in.)	(ft. - in.)	(ft. - in.)	(ft. - in.)	(ft. - in.)
19.2	Southern Pine	SS	8-9	13-9	18-2	23-1	Note b	8-9	13-9	18-2	23-1	Note b
	Southern Pine	#1	8-5	13-3	17-5	21-2	25-2	8-4	12-4	15-8	18-4	21-9
	Southern Pine	#2	8-1	12-3	15-7	18-6	21-9	7-1	10-8	13-6	16-0	18-10
	Southern Pine	#3	6-4	9-4	11-9	14-3	16-10	5-6	8-1	10-2	12-4	14-7
	Spruce-Pine-Fir	SS	8-3	12-11	17-1	21-9	Note b	8-3	12-11	17-1	21-0	24-4
	Spruce-Pine-Fir	#1	8-1	12-8	16-7	20-3	23-6	7-9	11-4	14-4	17-7	20-4
	Spruce-Pine-Fir	#2	8-1	12-8	16-7	20-3	23-6	7-9	11-4	14-4	17-7	20-4
	Spruce-Pine-Fir	#3	6-9	9-11	12-7	15-4	17-9	5-10	8-7	10-10	13-3	15-5
24	Douglas Fir-Larch	SS	8-3	13-0	17-2	21-10	Note b	8-3	13-0	16-7	20-3	23-5
	Douglas Fir-Larch	#1	8-0	12-6	15-10	19-5	22-6	7-5	10-10	13-9	16-9	19-6
	Douglas Fir-Larch	#2	7-10	11-9	14-10	18-2	21-0	6-11	10-2	12-10	15-8	18-3
	Douglas Fir-Larch	#3	6-1	8-10	11-3	13-8	15-11	5-3	7-8	9-9	11-10	13-9
	Hem-Fir	SS	7-10	12-3	16-2	20-8	25-1	7-10	12-3	16-2	19-10	23-0
	Hem-Fir	#1	7-8	12-0	15-6	18-11	21-11	7-3	10-7	13-5	16-4	19-0
	Hem-Fir	#2	7-3	11-5	14-8	17-10	20-9	6-10	10-0	12-8	15-6	17-11
	Hem-Fir	#3	6-1	8-10	11-3	13-8	15-11	5-3	7-8	9-9	11-10	13-9
	Southern Pine	SS	8-1	12-9	16-10	21-6	Note b	8-1	12-9	16-10	20-10	24-8
	Southern Pine	#1	7-10	12-3	16-2	18-11	22-6	7-5	11-1	14-0	16-5	19-6
	Southern Pine	#2	7-4	11-0	13-11	16-6	19-6	6-4	9-6	12-1	14-4	16-10
	Southern Pine	#3	5-8	8-4	10-6	12-9	15-1	4-11	7-3	9-1	11-0	13-1
	Spruce-Pine-Fir	SS	7-8	12-0	15-10	20-2	24-7	7-8	12-0	15-4	18-9	21-9
	Spruce-Pine-Fir	#1	7-6	11-9	14-10	18-2	21-0	6-11	10-2	12-10	15-8	18-3
	Spruce-Pine-Fir	#2	7-6	11-9	14-10	18-2	21-0	6-11	10-2	12-10	15-8	18-3
	Spruce-Pine-Fir	#3	6-1	8-10	11-3	13-8	15-11	5-3	7-8	9-9	11-10	13-9

Check sources for availability of lumber in lengths greater than 20 feet.

For SI: 1 inch = 25.4 mm, 1 foot = 304.8 mm, 1 pound per square foot = 0.0479 kPa.

a. The tabulated rafter spans assume that ceiling joists are located at the bottom of the attic space or that some other method of resisting the outward push of the rafters on the bearing walls, such as rafter ties, is provided at that location. When ceiling joists or rafter ties are located higher in the attic space, the rafter spans shall be multiplied by the factors given below:

H_C/H_R	Rafter Span Adjustment Factor
1/3	0.67
1/4	0.76
1/5	0.83
1/6	0.90
1/7.5 or less	1.00

where:

H_C = Height of ceiling joists or rafter ties measured vertically above the top of the rafter support walls.

H_R = Height of roof ridge measured vertically above the top of the rafter support walls.

b. Span exceeds 26 feet in length.

TABLE 2308.7.2(3)
RAFTER SPANS FOR COMMON LUMBER SPECIES
(Ground Snow Load = 30 psf, Ceiling Not Attached to Rafters, L/Δ = 180)

RAFTER SPACING (inches)	SPECIES AND GRADE		DEAD LOAD = 10 psf					DEAD LOAD = 20 psf				
			2 × 4	2 × 6	2 × 8	2 × 10	2 × 12	2 × 4	2 × 6	2 × 8	2 × 10	2 × 12
			Maximum rafter spans[a]									
			(ft. - in.)	(ft. - in.)	(ft. - in.)	(ft. - in.)	(ft. - in.)	(ft. - in.)	(ft. - in.)	(ft. - in.)	(ft. - in.)	(ft. - in.)
12	Douglas Fir-Larch	SS	10-0	15-9	20-9	Note b	Note b	10-0	15-9	20-1	24-6	Note b
	Douglas Fir-Larch	#1	9-8	14-9	18-8	22-9	Note b	9-0	13-2	16-8	20-4	23-7
	Douglas Fir-Larch	#2	9-5	13-9	17-5	21-4	24-8	8-5	12-4	15-7	19-1	22-1
	Douglas Fir-Larch	#3	7-1	10-5	13-2	16-1	18-8	6-4	9-4	11-9	14-5	16-8
	Hem-Fir	SS	9-6	14-10	19-7	25-0	Note b	9-6	14-10	19-7	24-1	Note b
	Hem-Fir	#1	9-3	14-4	18-2	22-2	25-9	8-9	12-10	16-3	19-10	23-0
	Hem-Fir	#2	8-10	13-7	17-2	21-0	24-4	8-4	12-2	15-4	18-9	21-9
	Hem-Fir	#3	7-1	10-5	13-2	16-1	18-8	6-4	9-4	11-9	14-5	16-8
	Southern Pine	SS	9-10	15-6	20-5	Note b	Note b	9-10	15-6	20-5	25-4	Note b
	Southern Pine	#1	9-6	14-10	19-0	22-3	26-0	9-0	13-5	17-0	19-11	23-7
	Southern Pine	#2	8-7	12-11	16-4	19-5	22-10	7-8	11-7	14-8	17-4	20-5
	Southern Pine	#3	6-7	9-9	12-4	15-0	17-9	5-11	8-9	11-0	13-5	15-10
	Spruce-Pine-Fir	SS	9-3	14-7	19-2	24-6	Note b	9-3	14-7	18-8	22-9	Note b
	Spruce-Pine-Fir	#1	9-1	13-9	17-5	21-4	24-8	8-5	12-4	15-7	19-1	22-1
	Spruce-Pine-Fir	#2	9-1	13-9	17-5	21-4	24-8	8-5	12-4	15-7	19-1	22-1
	Spruce-Pine-Fir	#3	7-1	10-5	13-2	16-1	18-8	6-4	9-4	11-9	14-5	16-8
16	Douglas Fir-Larch	SS	9-1	14-4	18-10	23-9	Note b	9-1	13-9	17-5	21-3	24-8
	Douglas Fir-Larch	#1	8-9	12-9	16-2	19-9	22-10	7-10	11-5	14-5	17-8	20-5
	Douglas Fir-Larch	#2	8-2	11-11	15-1	18-5	21-5	7-3	10-8	13-6	16-6	19-2
	Douglas Fir-Larch	#3	6-2	9-0	11-5	13-11	16-2	5-6	8-1	10-3	12-6	14-6
	Hem-Fir	SS	8-7	13-6	17-10	22-9	Note b	8-7	13-6	17-1	20-10	24-2
	Hem-Fir	#1	8-5	12-5	15-9	19-3	22-3	7-7	11-1	14-1	17-2	19-11
	Hem-Fir	#2	8-0	11-9	14-11	18-2	21-1	7-2	10-6	13-4	16-3	18-10
	Hem-Fir	#3	6-2	9-0	11-5	13-11	16-2	5-6	8-1	10-3	12-6	14-6
	Southern Pine	SS	8-11	14-1	18-6	23-8	Note b	8-11	14-1	18-5	21-11	25-11
	Southern Pine	#1	8-7	13-0	16-6	19-3	22-10	7-10	11-7	14-9	17-3	20-5
	Southern Pine	#2	7-6	11-2	14-2	16-10	19-10	6-8	10-0	12-8	15-1	17-9
	Southern Pine	#3	5-9	8-6	10-8	13-0	15-4	5-2	7-7	9-7	11-7	13-9
	Spruce-Pine-Fir	SS	8-5	13-3	17-5	22-1	25-7	8-5	12-9	16-2	19-9	22-10
	Spruce-Pine-Fir	#1	8-2	11-11	15-1	18-5	21-5	7-3	10-8	13-6	16-6	19-2
	Spruce-Pine-Fir	#2	8-2	11-11	15-1	18-5	21-5	7-3	10-8	13-6	16-6	19-2
	Spruce-Pine-Fir	#3	6-2	9-0	11-5	13-11	16-2	5-6	8-1	10-3	12-6	14-6
19.2	Douglas Fir-Larch	SS	8-7	13-6	17-9	21-8	25-2	8-7	12-6	15-10	19-5	22-6
	Douglas Fir-Larch	#1	7-11	11-8	14-9	18-0	20-11	7-1	10-5	13-2	16-1	18-8
	Douglas Fir-Larch	#2	7-5	10-11	13-9	16-10	19-6	6-8	9-9	12-4	15-1	17-6
	Douglas Fir-Larch	#3	5-7	8-3	10-5	12-9	14-9	5-0	7-4	9-4	11-5	13-2
	Hem-Fir	SS	8-1	12-9	16-9	21-4	24-8	8-1	12-4	15-7	19-1	22-1
	Hem-Fir	#1	7-9	11-4	14-4	17-7	20-4	6-11	10-2	12-10	15-8	18-2
	Hem-Fir	#2	7-4	10-9	13-7	16-7	19-3	6-7	9-7	12-2	14-10	17-3
	Hem-Fir	#3	5-7	8-3	10-5	12-9	14-9	5-0	7-4	9-4	11-5	13-2

(continued)

2116

TABLE 2308.7.2(3)—continued
RAFTER SPANS FOR COMMON LUMBER SPECIES
(Ground Snow Load = 30 psf, Ceiling Not Attached to Rafters, L/Δ = 180)

RAFTER SPACING (inches)	SPECIES AND GRADE		DEAD LOAD = 10 psf					DEAD LOAD = 20 psf				
			2 × 4	2 × 6	2 × 8	2 × 10	2 × 12	2 × 4	2 × 6	2 × 8	2 × 10	2 × 12
			Maximum rafter spans[a]									
			(ft. - in.)	(ft. - in.)	(ft. - in.)	(ft. - in.)	(ft. - in.)	(ft. - in.)	(ft. - in.)	(ft. - in.)	(ft. - in.)	(ft. - in.)
19.2	Southern Pine	SS	8-5	13-3	17-5	22-3	Note b	8-5	13-3	16-10	20-0	23-7
	Southern Pine	#1	8-0	11-10	15-1	17-7	20-11	7-1	10-7	13-5	15-9	18-8
	Southern Pine	#2	6-10	10-2	12-11	15-4	18-1	6-1	9-2	11-7	13-9	16-2
	Southern Pine	#3	5-3	7-9	9-9	11-10	14-0	4-8	6-11	8-9	10-7	12-6
	Spruce-Pine-Fir	SS	7-11	12-5	16-5	20-2	23-4	7-11	11-8	14-9	18-0	20-11
	Spruce-Pine-Fir	#1	7-5	10-11	13-9	16-10	19-6	6-8	9-9	12-4	15-1	17-6
	Spruce-Pine-Fir	#2	7-5	10-11	13-9	16-10	19-6	6-8	9-9	12-4	15-1	17-6
	Spruce-Pine-Fir	#3	5-7	8-3	10-5	12-9	14-9	5-0	7-4	9-4	11-5	13-2
24	Douglas Fir-Larch	SS	7-11	12-6	15-10	19-5	22-6	7-8	11-3	14-2	17-4	20-1
	Douglas Fir-Larch	#1	7-1	10-5	13-2	16-1	18-8	6-4	9-4	11-9	14-5	16-8
	Douglas Fir-Larch	#2	6-8	9-9	12-4	15-1	17-6	5-11	8-8	11-0	13-6	15-7
	Douglas Fir-Larch	#3	5-0	7-4	9-4	11-5	13-2	4-6	6-7	8-4	10-2	11-10
	Hem-Fir	SS	7-6	11-10	15-7	19-1	22-1	7-6	11-0	13-11	17-0	19-9
	Hem-Fir	#1	6-11	10-2	12-10	15-8	18-2	6-2	9-1	11-6	14-0	16-3
	Hem-Fir	#2	6-7	9-7	12-2	14-10	17-3	5-10	8-7	10-10	13-3	15-5
	Hem-Fir	#3	5-0	7-4	9-4	11-5	13-2	4-6	6-7	8-4	10-2	11-10
	Southern Pine	SS	7-10	12-3	16-2	20-0	23-7	7-10	11-10	15-0	17-11	21-2
	Southern Pine	#1	7-1	10-7	13-5	15-9	18-8	6-4	9-6	12-0	14-1	16-8
	Southern Pine	#2	6-1	9-2	11-7	13-9	16-2	5-5	8-2	10-4	12-3	14-6
	Southern Pine	#3	4-8	6-11	8-9	10-7	12-6	4-2	6-2	7-10	9-6	11-2
	Spruce-Pine-Fir	SS	7-4	11-7	14-9	18-0	20-11	7-1	10-5	13-2	16-1	18-8
	Spruce-Pine-Fir	#1	6-8	9-9	12-4	15-1	17-6	5-11	8-8	11-0	13-6	15-7
	Spruce-Pine-Fir	#2	6-8	9-9	12-4	15-1	17-6	5-11	8-8	11-0	13-6	15-7
	Spruce-Pine-Fir	#3	5-0	7-4	9-4	11-5	13-2	4-6	6-7	8-4	10-2	11-10

Check sources for availability of lumber in lengths greater than 20 feet.

For SI: 1 inch = 25.4 mm, 1 foot = 304.8 mm, 1 pound per square foot = 0.0479 kPa.

a. The tabulated rafter spans assume that ceiling joists are located at the bottom of the attic space or that some other method of resisting the outward push of the rafters on the bearing walls, such as rafter ties, is provided at that location. When ceiling joists or rafter ties are located higher in the attic space, the rafter spans shall be multiplied by the factors given below:

H_C/H_R	Rafter Span Adjustment Factor
1/3	0.67
1/4	0.76
1/5	0.83
1/6	0.90
1/7.5 or less	1.00

where:

H_C = Height of ceiling joists or rafter ties measured vertically above the top of the rafter support walls.

H_R = Height of roof ridge measured vertically above the top of the rafter support walls.

b. Span exceeds 26 feet in length.

TABLE 2308.7.2(4)
RAFTER SPANS FOR COMMON LUMBER SPECIES
(Ground Snow Load = 50 psf, Ceiling Not Attached to Rafters, L/Δ = 180)

RAFTER SPACING (inches)	SPECIES AND GRADE		DEAD LOAD = 10 psf					DEAD LOAD = 20 psf				
			2 × 4	2 × 6	2 × 8	2 × 10	2 × 12	2 × 4	2 × 6	2 × 8	2 × 10	2 × 12
			Maximum rafter spans[a]									
			(ft. - in.)	(ft. - in.)	(ft. - in.)	(ft. - in.)	(ft. - in.)	(ft. - in.)	(ft. - in.)	(ft. - in.)	(ft. - in.)	(ft. - in.)
12	Douglas Fir-Larch	SS	8-5	13-3	17-6	22-4	26-0	8-5	13-3	17-0	20-9	24-0
	Douglas Fir-larch	#1	8-2	12-0	15-3	18-7	21-7	7-7	11-2	14-1	17-3	20-0
	Douglas Fir-larch	#2	7-8	11-3	14-3	17-5	20-2	7-1	10-5	13-2	16-1	18-8
	Douglas Fir-larch	#3	5-10	8-6	10-9	13-2	15-3	5-5	7-10	10-0	12-2	14-1
	Hem-Fir	SS	8-0	12-6	16-6	21-1	25-6	8-0	12-6	16-6	20-4	23-7
	Hem-Fir	#1	7-10	11-9	14-10	18-1	21-0	7-5	10-10	13-9	16-9	19-5
	Hem-Fir	#2	7-5	11-1	14-0	17-2	19-11	7-0	10-3	13-0	15-10	18-5
	Hem-Fir	#3	5-10	8-6	10-9	13-2	15-3	5-5	7-10	10-0	12-2	14-1
	Southern Pine	SS	8-4	13-1	17-2	21-11	Note b	8-4	13-1	17-2	21-5	25-3
	Southern Pine	#1	8-0	12-3	15-6	18-2	21-7	7-7	11-4	14-5	16-10	20-0
	Southern Pine	#2	7-0	10-6	13-4	15-10	18-8	6-6	9-9	12-4	14-8	17-3
	Southern Pine	#3	5-5	8-0	10-1	12-3	14-6	5-0	7-5	9-4	11-4	13-5
	Spruce-Pine-Fir	SS	7-10	12-3	16-2	20-8	24-1	7-10	12-3	15-9	19-3	22-4
	Spruce-Pine-Fir	#1	7-8	11-3	14-3	17-5	20-2	7-1	10-5	13-2	16-1	18-8
	Spruce-Pine-Fir	#2	7-8	11-3	14-3	17-5	20-2	7-1	10-5	13-2	16-1	18-8
	Spruce-Pine-Fir	#3	5-10	8-6	10-9	13-2	15-3	5-5	7-10	10-0	12-2	14-1
16	Douglas Fir-Larch	SS	7-8	12-1	15-10	19-5	22-6	7-8	11-7	14-8	17-11	20-10
	Douglas Fir-Larch	#1	7-1	10-5	13-2	16-1	18-8	6-7	9-8	12-2	14-11	17-3
	Douglas Fir-Larch	#2	6-8	9-9	12-4	15-1	17-6	6-2	9-0	11-5	13-11	16-2
	Douglas Fir-Larch	#3	5-0	7-4	9-4	11-5	13-2	4-8	6-10	8-8	10-6	12-3
	Hem-Fir	SS	7-3	11-5	15-0	19-1	22-1	7-3	11-5	14-5	17-8	20-5
	Hem-Fir	#1	6-11	10-2	12-10	15-8	18-2	6-5	9-5	11-11	14-6	16-10
	Hem-Fir	#2	6-7	9-7	12-2	14-10	17-3	6-1	8-11	11-3	13-9	15-11
	Hem-Fir	#3	5-0	7-4	9-4	11-5	13-2	4-8	6-10	8-8	10-6	12-3
	Southern Pine	SS	7-6	11-10	15-7	19-11	23-7	7-6	11-10	15-7	18-6	21-10
	Southern Pine	#1	7-1	10-7	13-5	15-9	18-8	6-7	9-10	12-5	14-7	17-3
	Southern Pine	#2	6-1	9-2	11-7	13-9	16-2	5-8	8-5	10-9	12-9	15-0
	Southern Pine	#3	4-8	6-11	8-9	10-7	12-6	4-4	6-5	8-1	9-10	11-7
	Spruce-Pine-Fir	SS	7-1	11-2	14-8	18-0	20-11	7-1	10-9	13-8	15-11	19-4
	Spruce-Pine-Fir	#1	6-8	9-9	12-4	15-1	17-6	6-2	9-0	11-5	13-11	16-2
	Spruce-Pine-Fir	#2	6-8	9-9	12-4	15-1	17-6	6-2	9-0	11-5	13-11	16-2
	Spruce-Pine-Fir	#3	5-0	7-4	9-4	11-5	13-2	4-8	6-10	8-8	10-6	12-3
19.2	Douglas Fir-Larch	SS	7-3	11-4	14-6	17-8	20-6	7-3	10-7	13-5	16-5	19-0
	Douglas Fir-Larch	#1	6-6	9-6	12-0	14-8	17-1	6-0	8-10	11-2	13-7	15-9
	Douglas Fir-Larch	#2	6-1	8-11	11-3	13-9	15-11	5-7	8-3	10-5	12-9	14-9
	Douglas Fir-Larch	#3	4-7	6-9	8-6	10-5	12-1	4-3	6-3	7-11	9-7	11-2
	Hem-Fir	SS	6-10	10-9	14-2	17-5	20-2	6-10	10-5	13-2	16-1	18-8
	Hem-Fir	#1	6-4	9-3	11-9	14-4	16-7	5-10	8-7	10-10	13-3	15-5
	Hem-Fir	#2	6-0	8-9	11-1	13-7	15-9	5-7	8-1	10-3	12-7	14-7
	Hem-Fir	#3	4-7	6-9	8-6	10-5	12-1	4-3	6-3	7-11	9-7	11-2

(continued)

TABLE 2308.7.2(4)
RAFTER SPANS FOR COMMON LUMBER SPECIES
(Ground Snow Load = 50 psf, Ceiling Not Attached to Rafters, L/Δ = 180)

RAFTER SPACING (inches)	SPECIES AND GRADE		DEAD LOAD = 10 psf					DEAD LOAD = 20 psf				
			2 × 4	2 × 6	2 × 8	2 × 10	2 × 12	2 × 4	2 × 6	2 × 8	2 × 10	2 × 12
			Maximum rafter spans[a]									
			(ft. - in.)	(ft. - in.)	(ft. - in.)	(ft. - in.)	(ft. - in.)	(ft. - in.)	(ft. - in.)	(ft. - in.)	(ft. - in.)	(ft. - in.)
19.2	Southern Pine	SS	7-1	11-2	14-8	18-3	21-7	7-1	11-2	14-2	16-11	20-0
	Southern Pine	#1	6-6	9-8	12-3	14-4	17-1	6-0	9-0	11-4	13-4	15-9
	Southern Pine	#2	5-7	8-4	10-7	12-6	14-9	5-2	7-9	9-9	11-7	13-8
	Southern Pine	#3	4-3	6-4	8-0	9-8	11-5	4-0	5-10	7-4	8-11	10-7
	Spruce-Pine-Fir	SS	6-8	10-6	13-5	16-5	19-1	6-8	9-10	12-5	15-3	17-8
	Spruce-Pine-Fir	#1	6-1	8-11	11-3	13-9	15-11	5-7	8-3	10-5	12-9	14-9
	Spruce-Pine-Fir	#2	6-1	8-11	11-3	13-9	15-11	5-7	8-3	10-5	12-9	14-9
	Spruce-Pine-Fir	#3	4-7	6-9	8-6	10-5	12-1	4-3	6-3	7-11	9-7	11-2
24	Douglas Fir-Larch	SS	6-8	10-3	13-0	15-10	18-4	6-6	9-6	12-0	14-8	17-0
	Douglas Fir-Larch	#1	5-10	8-6	10-9	13-2	15-3	5-5	7-10	10-0	12-2	14-1
	Douglas Fir-Larch	#2	5-5	7-11	10-1	12-4	14-3	5-0	7-4	9-4	11-5	13-2
	Douglas Fir-Larch	#3	4-1	6-0	7-7	9-4	10-9	3-10	5-7	7-1	8-7	10-0
	Hem-Fir	SS	6-4	9-11	12-9	15-7	18-0	6-4	9-4	11-9	14-5	16-8
	Hem-Fir	#1	5-8	8-3	10-6	12-10	14-10	5-3	7-8	9-9	11-10	13-9
	Hem-Fir	#2	5-4	7-10	9-11	12-1	14-1	4-11	7-3	9-2	11-3	13-0
	Hem-Fir	#3	4-1	6-0	7-7	9-4	10-9	3-10	5-7	7-1	8-7	10-0
	Southern Pine	SS	6-7	10-4	13-8	16-4	19-3	6-7	10-0	12-8	15-2	17-10
	Southern Pine	#1	5-10	8-8	11-0	12-10	15-3	5-5	8-0	10-2	11-11	14-1
	Southern Pine	#2	5-0	7-5	9-5	11-3	13-2	4-7	6-11	8-9	10-5	12-3
	Southern Pine	#3	3-10	5-8	7-1	8-8	10-3	3-6	5-3	6-7	8-0	9-6
	Spruce-Pine-Fir	SS	6-2	9-6	12-0	14-8	17-1	6-0	8-10	11-2	13-7	15-9
	Spruce-Pine-Fir	#1	5-5	7-11	10-1	12-4	14-3	5-0	7-4	9-4	11-5	13-2
	Spruce-Pine-Fir	#2	5-5	7-11	10-1	12-4	14-3	5-0	7-4	9-4	11-5	13-2
	Spruce-Pine-Fir	#3	4-1	6-0	7-7	9-4	10-9	3-10	5-7	7-1	8-7	10-0

Check sources for availability of lumber in lengths greater than 20 feet.

For SI: 1 inch = 25.4 mm, 1 foot = 304.8 mm, 1 pound per square foot = 0.0479 kPa.

a. The tabulated rafter spans assume that ceiling joists are located at the bottom of the attic space or that some other method of resisting the outward push of the rafters on the bearing walls, such as rafter ties, is provided at that location. When ceiling joists or rafter ties are located higher in the attic space, the rafter spans shall be multiplied by the factors given below:

H_C/H_R	Rafter Span Adjustment Factor
1/3	0.67
1/4	0.76
1/5	0.83
1/6	0.90
1/7.5 or less	1.00

where:

H_C = Height of ceiling joists or rafter ties measured vertically above the top of the rafter support walls.

H_R = Height of roof ridge measured vertically above the top of the rafter support walls.

b. Span exceeds 26 feet in length.

TABLE 2308.7.2(5)
RAFTER SPANS FOR COMMON LUMBER SPECIES
(Ground Snow Load = 30 psf, Ceiling Attached to Rafters, L/Δ = 240)

RAFTER SPACING (inches)	SPECIES AND GRADE		DEAD LOAD = 10 psf					DEAD LOAD = 20 psf				
			2 × 4	2 × 6	2 × 8	2 × 10	2 × 12	2 × 4	2 × 6	2 × 8	2 × 10	2 × 12
			Maximum rafter spans[a]									
			(ft. - in.)	(ft. - in.)	(ft. - in.)	(ft. - in.)	(ft. - in.)	(ft. - in.)	(ft. - in.)	(ft. - in.)	(ft. - in.)	(ft. - in.)
12	Douglas Fir-Larch	SS	9-1	14-4	18-10	24-1	Note b	9-1	14-4	18-10	24-1	Note b
	Douglas Fir-Larch	#1	8-9	13-9	18-2	22-9	Note b	8-9	13-2	16-8	20-4	23-7
	Douglas Fir-Larch	#2	8-7	13-6	17-5	21-4	24-8	8-5	12-4	15-7	19-1	22-1
	Douglas Fir-Larch	#3	7-1	10-5	13-2	16-1	18-8	6-4	9-4	11-9	14-5	16-8
	Hem-Fir	SS	8-7	13-6	17-10	22-9	Note b	8-7	13-6	17-10	22-9	Note b
	Hem-Fir	#1	8-5	13-3	17-5	22-2	25-9	8-5	12-10	16-3	19-10	23-0
	Hem-Fir	#2	8-0	12-7	16-7	21-0	24-4	8-0	12-2	15-4	18-9	21-9
	Hem-Fir	#3	7-1	10-5	13-2	16-1	18-8	6-4	9-4	11-9	14-5	16-8
	Southern Pine	SS	8-11	14-1	18-6	23-8	Note b	8-11	14-1	18-6	23-8	Note b
	Southern Pine	#1	8-7	13-6	17-10	22-3	Note b	8-7	13-5	17-0	19-11	23-7
	Southern Pine	#2	8-3	12-11	16-4	19-5	22-10	7-8	11-7	14-8	17-4	20-5
	Southern Pine	#3	6-7	9-9	12-4	15-0	17-9	5-11	8-9	11-0	13-5	15-10
	Spruce-Pine-Fir	SS	8-5	13-3	17-5	22-3	Note b	8-5	13-3	17-5	22-3	Note b
	Spruce-Pine-Fir	#1	8-3	12-11	17-0	21-4	24-8	8-3	12-4	15-7	19-1	22-1
	Spruce-Pine-Fir	#2	8-3	12-11	17-0	21-4	24-8	8-3	12-4	15-7	19-1	22-1
	Spruce-Pine-Fir	#3	7-1	10-5	13-2	16-1	18-8	6-4	9-4	11-9	14-5	16-8
16	Douglas Fir-Larch	SS	8-3	13-0	17-2	21-10	Note b	8-3	13-0	17-2	21-3	24-8
	Douglas Fir-Larch	#1	8-0	12-6	16-2	19-9	22-10	7-10	11-5	14-5	17-8	20-5
	Douglas Fir-Larch	#2	7-10	11-11	15-1	18-5	21-5	7-3	10-8	13-6	16-6	19-2
	Douglas Fir-Larch	#3	6-2	9-0	11-5	13-11	16-2	5-6	8-1	10-3	12-6	14-6
	Hem-Fir	SS	7-10	12-3	16-2	20-8	25-1	7-10	12-3	16-2	20-8	24-2
	Hem-Fir	#1	7-8	12-0	15-9	19-3	22-3	7-7	11-1	14-1	17-2	19-11
	Hem-Fir	#2	7-3	11-5	14-11	18-2	21-1	7-2	10-6	13-4	16-3	18-10
	Hem-Fir	#3	6-2	9-0	11-5	13-11	16-2	5-6	8-1	10-3	12-6	14-6
	Southern Pine	SS	8-1	12-9	16-10	21-6	Note b	8-1	12-9	16-10	21-6	25-11
	Southern Pine	#1	7-10	12-3	16-2	19-3	22-10	7-10	11-7	14-9	17-3	20-5
	Southern Pine	#2	7-6	11-2	14-2	16-10	19-10	6-8	10-0	12-8	15-1	17-9
	Southern Pine	#3	5-9	8-6	10-8	13-0	15-4	5-2	7-7	9-7	11-7	13-9
	Spruce-Pine-Fir	SS	7-8	12-0	15-10	20-2	24-7	7-8	12-0	15-10	19-9	22-10
	Spruce-Pine-Fir	#1	7-6	11-9	15-1	18-5	21-5	7-3	10-8	13-6	16-6	19-2
	Spruce-Pine-Fir	#2	7-6	11-9	15-1	18-5	21-5	7-3	10-8	13-6	16-6	19-2
	Spruce-Pine-Fir	#3	6-2	9-0	11-5	13-11	16-2	5-6	8-1	10-3	12-6	14-6
19.2	Douglas Fir-Larch	SS	7-9	12-3	16-1	20-7	25-0	7-9	12-3	15-10	19-5	22-6
	Douglas Fir-Larch	#1	7-6	11-8	14-9	18-0	20-11	7-1	10-5	13-2	16-1	18-8
	Douglas Fir-Larch	#2	7-4	10-11	13-9	16-10	19-6	6-8	9-9	12-4	15-1	17-6
	Douglas Fir-Larch	#3	5-7	8-3	10-5	12-9	14-9	5-0	7-4	9-4	11-5	13-2
	Hem-Fir	SS	7-4	11-7	15-3	19-5	23-7	7-4	11-7	15-3	19-1	22-1
	Hem-Fir	#1	7-2	11-4	14-4	17-7	20-4	6-11	10-2	12-10	15-8	18-2
	Hem-Fir	#2	6-10	10-9	13-7	16-7	19-3	6-7	9-7	12-2	14-10	17-3
	Hem-Fir	#3	5-7	8-3	10-5	12-9	14-9	5-0	7-4	9-4	11-5	13-2

(continued)

2120

TABLE 2308.7.2(5)—continued
RAFTER SPANS FOR COMMON LUMBER SPECIES
(Ground Snow Load = 30 psf, Ceiling Attached to Rafters, L/Δ = 240)

RAFTER SPACING (inches)	SPECIES AND GRADE		DEAD LOAD = 10 psf					DEAD LOAD = 20 psf				
			2 × 4	2 × 6	2 × 8	2 × 10	2 × 12	2 × 4	2 × 6	2 × 8	2 × 10	2 × 12
			Maximum rafter spans[a]									
			(ft. - in.)	(ft. - in.)	(ft. - in.)	(ft. - in.)	(ft. - in.)	(ft. - in.)	(ft. - in.)	(ft. - in.)	(ft. - in.)	(ft. - in.)
19.2	Southern Pine	SS	7-8	12-0	15-10	20-2	24-7	7-8	12-0	15-10	20-0	23-7
	Southern Pine	#1	7-4	11-7	15-1	17-7	20-11	7-1	10-7	13-5	15-9	18-8
	Southern Pine	#2	6-10	10-2	12-11	15-4	18-1	6-1	9-2	11-7	13-9	16-2
	Southern Pine	#3	5-3	7-9	9-9	11-10	14-0	4-8	6-11	8-9	10-7	12-6
	Spruce-Pine-Fir	SS	7-2	11-4	14-11	19-0	23-1	7-2	11-4	14-9	18-0	20-11
	Spruce-Pine-Fir	#1	7-0	10-11	13-9	16-10	19-6	6-8	9-9	12-4	15-1	17-6
	Spruce-Pine-Fir	#2	7-0	10-11	13-9	16-10	19-6	6-8	9-9	12-4	15-1	17-6
	Spruce-Pine-Fir	#3	5-7	8-3	10-5	12-9	14-9	5-0	7-4	9-4	11-5	13-2
24	Douglas Fir-Larch	SS	7-3	11-4	15-0	19-1	22-6	7-3	11-3	14-2	17-4	20-1
	Douglas Fir-Larch	#1	7-0	10-5	13-2	16-1	18-8	6-4	9-4	11-9	14-5	16-8
	Douglas Fir-Larch	#2	6-8	9-9	12-4	15-1	17-6	5-11	8-8	11-0	13-6	15-7
	Douglas Fir-Larch	#3	5-0	7-4	9-4	11-5	13-2	4-6	6-7	8-4	10-2	11-10
	Hem-Fir	SS	6-10	10-9	14-2	18-0	21-11	6-10	10-9	13-11	17-0	19-9
	Hem-Fir	#1	6-8	10-2	12-10	15-8	18-2	6-2	9-1	11-6	14-0	16-3
	Hem-Fir	#2	6-4	9-7	12-2	14-10	17-3	5-10	8-7	10-10	13-3	15-5
	Hem-Fir	#3	5-0	7-4	9-4	11-5	13-2	4-6	6-7	8-4	10-2	11-10
	Southern Pine	SS	7-1	11-2	14-8	18-9	22-10	7-1	11-2	14-8	17-11	21-2
	Southern Pine	#1	6-10	10-7	13-5	15-9	18-8	6-4	9-6	12-0	14-1	16-8
	Southern Pine	#2	6-1	9-2	11-7	13-9	16-2	5-5	8-2	10-4	12-3	14-6
	Southern Pine	#3	4-8	6-11	8-9	10-7	12-6	4-2	6-2	7-10	9-6	11-2
	Spruce-Pine-Fir	SS	6-8	10-6	13-10	17-8	20-11	6-8	10-5	13-2	16-1	18-8
	Spruce-Pine-Fir	#1	6-6	9-9	12-4	15-1	17-6	5-11	8-8	11-0	13-6	15-7
	Spruce-Pine-Fir	#2	6-6	9-9	12-4	15-1	17-6	5-11	8-8	11-0	13-6	15-7
	Spruce-Pine-Fir	#3	5-0	7-4	9-4	11-5	13-2	4-6	6-7	8-4	10-2	11-10

Check sources for availability of lumber in lengths greater than 20 feet.

For SI: 1 inch = 25.4 mm, 1 foot = 304.8 mm, 1 pound per square foot = 0.0479 kPa.

a. The tabulated rafter spans assume that ceiling joists are located at the bottom of the attic space or that some other method of resisting the outward push of the rafters on the bearing walls, such as rafter ties, is provided at that location. When ceiling joists or rafter ties are located higher in the attic space, the rafter spans shall be multiplied by the factors given below:

H_C/H_R	Rafter Span Adjustment Factor
1/3	0.67
1/4	0.76
1/5	0.83
1/6	0.90
1/7.5 or less	1.00

where:

H_C = Height of ceiling joists or rafter ties measured vertically above the top of the rafter support walls.

H_R = Height of roof ridge measured vertically above the top of the rafter support walls.

b. Span exceeds 26 feet in length.

TABLE 2308.7.2(6)
RAFTER SPANS FOR COMMON LUMBER SPECIES
(Ground Snow Load = 50 psf, Ceiling Attached to Rafters, L/Δ = 240)

RAFTER SPACING (inches)	SPECIES AND GRADE		DEAD LOAD = 10 psf					DEAD LOAD = 20 psf				
			2 × 4	2 × 6	2 × 8	2 × 10	2 × 12	2 × 4	2 × 6	2 × 8	2 × 10	2 × 12
			Maximum rafter spans[a]									
			(ft. - in.)	(ft. - in.)	(ft. - in.)	(ft. - in.)	(ft. - in.)	(ft. - in.)	(ft. - in.)	(ft. - in.)	(ft. - in.)	(ft. - in.)
12	Douglas Fir-Larch	SS	7-8	12-1	15-11	20-3	24-8	7-8	12-1	15-11	20-3	24-0
	Douglas Fir-Larch	#1	7-5	11-7	15-3	18-7	21-7	7-5	11-2	14-1	17-3	20-0
	Douglas Fir-Larch	#2	7-3	11-3	14-3	17-5	20-2	7-1	10-5	13-2	16-1	18-8
	Douglas Fir-Larch	#3	5-10	8-6	10-9	13-2	15-3	5-5	7-10	10-0	12-2	14-1
	Hem-Fir	SS	7-3	11-5	15-0	19-2	23-4	7-3	11-5	15-0	19-2	23-4
	Hem-Fir	#1	7-1	11-2	14-8	18-1	21-0	7-1	10-10	13-9	16-9	19-5
	Hem-Fir	#2	6-9	10-8	14-0	17-2	19-11	6-9	10-3	13-0	15-10	18-5
	Hem-Fir	#3	5-10	8-6	10-9	13-2	15-3	5-5	7-10	10-0	12-2	14-1
	Southern Pine	SS	7-6	11-10	15-7	19-11	24-3	7-6	11-10	15-7	19-11	24-3
	Southern Pine	#1	7-3	11-5	15-0	18-2	21-7	7-3	11-4	14-5	16-10	20-0
	Southern Pine	#2	6-11	10-6	13-4	15-10	18-8	6-6	9-9	12-4	14-8	17-3
	Southern Pine	#3	5-5	8-0	10-1	12-3	14-6	5-0	7-5	9-4	11-4	13-5
	Spruce-Pine-Fir	SS	7-1	11-2	14-8	18-9	22-10	7-1	11-2	14-8	18-9	22-4
	Spruce-Pine-Fir	#1	6-11	10-11	14-3	17-5	20-2	6-11	10-5	13-2	16-1	18-8
	Spruce-Pine-Fir	#2	6-11	10-11	14-3	17-5	20-2	6-11	10-5	13-2	16-1	18-8
	Spruce-Pine-Fir	#3	5-10	8-6	10-9	13-2	15-3	5-5	7-10	10-0	12-2	14-1
16	Douglas Fir-Larch	SS	7-0	11-0	14-5	18-5	22-5	7-0	11-0	14-5	17-11	20-10
	Douglas Fir-Larch	#1	6-9	10-5	13-2	16-1	18-8	6-7	9-8	12-2	14-11	17-3
	Douglas Fir-Larch	#2	6-7	9-9	12-4	15-1	17-6	6-2	9-0	11-5	13-11	16-2
	Douglas Fir-Larch	#3	5-0	7-4	9-4	11-5	13-2	4-8	6-10	8-8	10-6	12-3
	Hem-Fir	SS	6-7	10-4	13-8	17-5	21-2	6-7	10-4	13-8	17-5	20-5
	Hem-Fir	#1	6-5	10-2	12-10	15-8	18-2	6-5	9-5	11-11	14-6	16-10
	Hem-Fir	#2	6-2	9-7	12-2	14-10	17-3	6-1	8-11	11-3	13-9	15-11
	Hem-Fir	#3	5-0	7-4	9-4	11-5	13-2	4-8	6-10	8-8	10-6	12-3
	Southern Pine	SS	6-10	10-9	14-2	18-1	22-0	6-10	10-9	14-2	18-1	21-10
	Southern Pine	#1	6-7	10-4	13-5	15-9	18-8	6-7	9-10	12-5	14-7	17-3
	Southern Pine	#2	6-1	9-2	11-7	13-9	16-2	5-8	8-5	10-9	12-9	15-0
	Southern Pine	#3	4-8	6-11	8-9	10-7	12-6	4-4	6-5	8-1	9-10	11-7
	Spruce-Pine-Fir	SS	6-5	10-2	13-4	17-0	20-9	6-5	10-2	13-4	16-8	19-4
	Spruce-Pine-Fir	#1	6-4	9-9	12-4	15-1	17-6	6-2	9-0	11-5	13-11	16-2
	Spruce-Pine-Fir	#2	6-4	9-9	12-4	15-1	17-6	6-2	9-0	11-5	13-11	16-2
	Spruce-Pine-Fir	#3	5-0	7-4	9-4	11-5	13-2	4-8	6-10	8-8	10-6	12-3
19.2	Douglas Fir-Larch	SS	6-7	10-4	13-7	17-4	20-6	6-7	10-4	13-5	16-5	19-0
	Douglas Fir-Larch	#1	6-4	9-6	12-0	14-8	17-1	6-0	8-10	11-2	13-7	15-9
	Douglas Fir-Larch	#2	6-1	8-11	11-3	13-9	15-11	5-7	8-3	10-5	12-9	14-9
	Douglas Fir-Larch	#3	4-7	6-9	8-6	10-5	12-1	4-3	6-3	7-11	9-7	11-2
	Hem-Fir	SS	6-2	9-9	12-10	16-5	19-11	6-2	9-9	12-10	16-1	18-8
	Hem-Fir	#1	6-1	9-3	11-9	14-4	16-7	5-10	8-7	10-10	13-3	15-5
	Hem-Fir	#2	5-9	8-9	11-1	13-7	15-9	5-7	8-1	10-3	12-7	14-7
	Hem-Fir	#3	4-7	6-9	8-6	10-5	12-1	4-3	6-3	7-11	9-7	11-2

(continued)

TABLE 2308.7.2(6)—continued
RAFTER SPANS FOR COMMON LUMBER SPECIES
(Ground Snow Load = 50 psf, Ceiling Attached to Rafters, L/Δ = 240)

RAFTER SPACING (inches)	SPECIES AND GRADE		DEAD LOAD = 10 psf					DEAD LOAD = 20 psf				
			2 × 4	2 × 6	2 × 8	2 × 10	2 × 12	2 × 4	2 × 6	2 × 8	2 × 10	2 × 12
			Maximum rafter spans[a]									
			(ft. - in.)	(ft. - in.)	(ft. - in.)	(ft. - in.)	(ft. - in.)	(ft. - in.)	(ft. - in.)	(ft. - in.)	(ft. - in.)	(ft. - in.)
19.2	Southern Pine	SS	6-5	10-2	13-4	17-0	20-9	6-5	10-2	13-4	16-11	20-0
	Southern Pine	#1	6-2	9-8	12-3	14-4	17-1	6-0	9-0	11-4	13-4	15-9
	Southern Pine	#2	5-7	8-4	10-7	12-6	14-9	5-2	7-9	9-9	11-7	13-8
	Southern Pine	#3	4-3	6-4	8-0	9-8	11-5	4-0	5-10	7-4	8-11	10-7
	Spruce-Pine-Fir	SS	6-1	9-6	12-7	16-0	19-1	6-1	9-6	12-5	15-3	17-8
	Spruce-Pine-Fir	#1	5-11	8-11	11-3	13-9	15-11	5-7	8-3	10-5	12-9	14-9
	Spruce-Pine-Fir	#2	5-11	8-11	11-3	13-9	15-11	5-7	8-3	10-5	12-9	14-9
	Spruce-Pine-Fir	#3	4-7	6-9	8-6	10-5	12-1	4-3	6-3	7-11	9-7	11-2
24	Douglas Fir-Larch	SS	6-1	9-7	12-7	15-10	18-4	6-1	9-6	12-0	14-8	17-0
	Douglas Fir-Larch	#1	5-10	8-6	10-9	13-2	15-3	5-5	7-10	10-0	12-2	14-1
	Douglas Fir-Larch	#2	5-5	7-11	10-1	12-4	14-3	5-0	7-4	9-4	11-5	13-2
	Douglas Fir-Larch	#3	4-1	6-0	7-7	9-4	10-9	3-10	5-7	7-1	8-7	10-0
	Hem-Fir	SS	5-9	9-1	11-11	15-2	18-0	5-9	9-1	11-9	14-5	15-11
	Hem-Fir	#1	5-8	8-3	10-6	12-10	14-10	5-3	7-8	9-9	11-10	13-9
	Hem-Fir	#2	5-4	7-10	9-11	12-1	14-1	4-11	7-3	9-2	11-3	13-0
	Hem-Fir	#3	4-1	6-0	7-7	9-4	10-9	3-10	5-7	7-1	8-7	10-0
	Southern Pine	SS	6-0	9-5	12-5	15-10	19-3	6-0	9-5	12-5	15-2	17-10
	Southern Pine	#1	5-9	8-8	11-0	12-10	15-3	5-5	8-0	10-2	11-11	14-1
	Southern Pine	#2	5-0	7-5	9-5	11-3	13-2	4-7	6-11	8-9	10-5	12-3
	Southern Pine	#3	3-10	5-8	7-1	8-8	10-3	3-6	5-3	6-7	8-0	9-6
	Spruce-Pine-Fir	SS	5-8	8-10	11-8	14-8	17-1	5-8	8-10	11-2	13-7	15-9
	Spruce-Pine-Fir	#1	5-5	7-11	10-1	12-4	14-3	5-0	7-4	9-4	11-5	13-2
	Spruce-Pine-Fir	#2	5-5	7-11	10-1	12-4	14-3	5-0	7-4	9-4	11-5	13-2
	Spruce-Pine-Fir	#3	4-1	6-0	7-7	9-4	10-9	3-10	5-7	7-1	8-7	10-0

Check sources for availability of lumber in lengths greater than 20 feet.

For SI: 1 inch = 25.4 mm, 1 foot = 304.8 mm, 1 pound per square foot = 0.0479 kPa.

a. The tabulated rafter spans assume that ceiling joists are located at the bottom of the attic space or that some other method of resisting the outward push of the rafters on the bearing walls, such as rafter ties, is provided at that location. When ceiling joists or rafter ties are located higher in the attic space, the rafter spans shall be multiplied by the factors given below:

H_C/H_R	Rafter Span Adjustment Factor
1/3	0.67
1/4	0.76
1/5	0.83
1/6	0.90
1/7.5 or less	1.00

where:

H_C = Height of ceiling joists or rafter ties measured vertically above the top of the rafter support walls.

H_R = Height of roof ridge measured vertically above the top of the rafter support walls.

TABLE 2308.7.3.1
RAFTER TIE CONNECTIONS[g]

RAFTER SLOPE	TIE SPACING (inches)	NO SNOW LOAD				GROUND SNOW LOAD (pound per square foot)							
						30 pounds per square foot				50 pounds per square foot			
						Roof span (feet)							
		12	20	28	36	12	20	28	36	12	20	28	36
		Required number of 16d common ($3^1/_2''$ x 0.162″) nails[a, b] per connection[c, d, e, f]											
3:12	12	4	6	8	10	4	6	8	11	5	8	12	15
	16	5	7	10	13	5	8	11	14	6	11	15	20
	24	7	11	15	19	7	11	16	21	9	16	23	30
	32	10	14	19	25	10	16	22	28	12	27	30	40
	48	14	21	29	37	14	32	36	42	18	32	46	60
4:12	12	3	4	5	6	3	5	6	8	4	6	9	11
	16	3	5	7	8	4	6	8	11	5	8	12	15
	24	4	7	10	12	5	9	12	16	7	12	17	22
	32	6	9	13	16	8	12	16	22	10	16	24	30
	48	8	14	19	24	10	18	24	32	14	24	34	44
5:12	12	3	3	4	5	3	4	5	7	3	5	7	9
	16	3	4	5	7	3	5	7	9	4	7	9	12
	24	4	6	8	10	4	7	10	13	6	10	14	18
	32	5	8	10	13	6	10	14	18	8	14	18	24
	48	7	11	15	20	8	14	20	26	12	20	28	36
7:12	12	3	3	3	4	3	3	4	5	3	4	5	7
	16	3	3	4	5	3	4	5	6	3	5	7	9
	24	3	4	6	7	3	5	7	9	4	7	10	13
	32	4	6	8	10	4	8	10	12	6	10	14	18
	48	5	8	11	14	6	10	14	18	9	14	20	26
9:12	12	3	3	3	3	3	3	3	4	3	3	4	5
	16	3	3	3	4	3	3	4	5	3	4	5	7
	24	3	3	5	6	3	4	6	7	3	6	8	10
	32	3	4	6	8	4	6	8	10	5	8	10	14
	48	4	6	9	11	5	8	12	14	7	12	16	20
12:12	12	3	3	3	3	3	3	3	3	3	3	3	4
	16	3	3	3	3	3	3	3	4	3	3	4	5
	24	3	3	3	4	3	3	4	6	3	4	6	8
	32	3	3	4	5	3	5	6	8	4	6	8	10
	48	3	4	6	7	4	7	8	12	6	8	12	16

For SI: 1 inch = 25.4 mm, 1 foot = 304.8 mm, 1 pound per square foot = 47.8 N/m^2.

a. 40d box (5″ × 0.162″) or 16d sinker ($3^1/_4''$ × 0.148″) nails are permitted to be substituted for 16d common ($3^1/_2''$ × 0.16″) nails.

b. Nailing requirements are permitted to be reduced 25 percent if nails are clinched.

c. Rafter tie heel joint connections are not required where the ridge is supported by a load-bearing wall, header or ridge beam.

d. When intermediate support of the rafter is provided by vertical struts or purlins to a load-bearing wall, the tabulated heel joint connection requirements are permitted to be reduced proportionally to the reduction in span.

e. Equivalent nailing patterns are required for ceiling joist to ceiling joist lap splices.

f. Connected members shall be of sufficient size to prevent splitting due to nailing.

g. For snow loads less than 30 pounds per square foot, the required number of nails is permitted to be reduced by multiplying by the ratio of actual snow load plus 10 divided by 40, but not less than the number required for no snow load.

TABLE 2308.7.12
ALLOWABLE SPANS FOR 2-INCH TONGUE-AND-GROOVE DECKING

SPAN[a] (feet)	LIVE LOAD (pounds per square foot)	DEFLECTION LIMIT	BENDING STRESS (f) (pounds per square inch)	MODULUS OF ELASTICITY (E) (pounds per square inch)
Roofs				
4	20	1/240 1/360	160	170,000 256,000
	30	1/240 1/360	210	256,000 384,000
	40	1/240 1/360	270	340,000 512,000
4.5	20	1/240 1/360	200	242,000 305,000
	30	1/240 1/360	270	363,000 405,000
	40	1/240 1/360	350	484,000 725,000
5.0	20	1/240 1/360	250	332,000 500,000
	30	1/240 1/360	330	495,000 742,000
	40	1/240 1/360	420	660,000 1,000,000
5.5	20	1/240 1/360	300	442,000 660,000
	30	1/240 1/360	400	662,000 998,000
	40	1/240 1/360	500	884,000 1,330,000
6.0	20	1/240 1/360	360	575,000 862,000
	30	1/240 1/360	480	862,000 1,295,000
	40	1/240 1/360	600	1,150,000 1,730,000

(continued)

2308.8 Design of elements. Combining of engineered elements or systems and conventionally specified elements or systems shall be permitted subject to the limits of Sections 2308.8.1 and 2308.8.2.

2308.8.1 Elements exceeding limitations of conventional construction. Where a building of otherwise conventional construction contains structural elements exceeding the limits of Section 2308.2, these elements and the supporting load path shall be designed in accordance with accepted engineering practice and the provisions of this code.

2308.8.2 Structural elements or systems not described herein. Where a building of otherwise conventional construction contains structural elements or systems not described in Section 2308, these elements or systems shall be designed in accordance with accepted engineering practice and the provisions of this code. The extent of such design need only demonstrate compliance of the nonconventional elements with other applicable provisions of this code and shall be compatible with the performance of the conventionally framed system.

SECTION 2309
WOOD FRAME CONSTRUCTION MANUAL

2309.1 Wood Frame Construction Manual. Structural design in accordance with the AWC WFCM shall be permitted for buildings assigned to Risk Category I or II subject to the limitations of Section 1.1.3 of the AWC WFCM and the load assumptions contained therein. Structural elements beyond these limitations shall be designed in accordance with accepted engineering practice.

TABLE 2308.7.12—continued
ALLOWABLE SPANS FOR 2-INCH TONGUE-AND-GROOVE DECKING

SPAN[a] (feet)	LIVE LOAD (pounds per square foot)	DEFLECTION LIMIT	BENDING STRESS (f) (pounds per square inch)	MODULUS OF ELASTICITY (E) (pounds per square inch)
Roofs				
6.5	20	1/240 1/360	420	595,000 892,000
	30	1/240 1/360	560	892,000 1,340,000
	40	1/240 1/360	700	1,190,000 1,730,000
7.0	20	1/240 1/360	490	910,000 1,360,000
	30	1/240 1/360	650	1,370,000 2,000,000
	40	1/240 1/360	810	1,820,000 2,725,000
7.5	20	1/240 1/360	560	1,125,000 1,685,000
	30	1/240 1/360	750	1,685,000 2,530,000
	40	1/240 1/360	930	2,250,000 3,380,000
8.0	20	1/240 1/360	640	1,360,000 2,040,000
	30	1/240 1/360	850	2,040,000 3,060,000
Floors				
4 4.5 5.0	40	1/360	840 950 1,060	1,000,000 1,300,000 1,600,000

For SI: 1 inch = 25.4 mm, 1 foot = 304.8 mm, 1 pound per square foot = 0.0479 kN/m^2, 1 pound per square inch = 0.00689 N/mm^2.

a. Spans are based on simple beam action with 10 pounds per square foot dead load and provisions for a 300-pound concentrated load on a 12-inch width of decking. Random layup is permitted in accordance with the provisions of Section 2308.7.12. Lumber thickness is $1^1/_2$ inches nominal.

CHAPTER 24

GLASS AND GLAZING

User note: Code change proposals to this chapter will be considered by the IBC – Structural Code Development Committee during the 2016 (Group B) Code Development Cycle. See explanation on page iv.

SECTION 2401
GENERAL

2401.1 Scope. The provisions of this chapter shall govern the materials, design, construction and quality of glass, light-transmitting ceramic and light-transmitting plastic panels for exterior and interior use in both vertical and sloped applications in buildings and structures.

2401.2 Glazing replacement. The installation of replacement glass shall be as required for new installations.

SECTION 2402
DEFINITIONS

2402.1 Definitions. The following terms are defined in Chapter 2:

DALLE GLASS.

DECORATIVE GLASS.

SECTION 2403
GENERAL REQUIREMENTS FOR GLASS

2403.1 Identification. Each pane shall bear the manufacturer's *mark* designating the type and thickness of the glass or glazing material. The identification shall not be omitted unless *approved* and an affidavit is furnished by the glazing contractor certifying that each light is glazed in accordance with *approved construction documents* that comply with the provisions of this chapter. Safety glazing shall be identified in accordance with Section 2406.3.

Each pane of tempered glass, except tempered spandrel glass, shall be permanently identified by the manufacturer. The identification *mark* shall be acid etched, sand blasted, ceramic fired, laser etched, embossed or of a type that, once applied, cannot be removed without being destroyed.

Tempered spandrel glass shall be provided with a removable paper marking by the manufacturer.

2403.2 Glass supports. Where one or more sides of any pane of glass are not firmly supported, or are subjected to unusual load conditions, detailed *construction documents*, detailed shop drawings and analysis or test data ensuring safe performance for the specific installation shall be prepared by a *registered design professional.*

2403.3 Framing. To be considered firmly supported, the framing members for each individual pane of glass shall be designed so the deflection of the edge of the glass perpendicular to the glass pane shall not exceed $^1/_{175}$ of the glass edge length or $^3/_4$ inch (19.1 mm), whichever is less, when subjected to the larger of the positive or negative load where loads are combined as specified in Section 1605.

2403.4 Interior glazed areas. Where interior glazing is installed adjacent to a walking surface, the differential deflection of two adjacent unsupported edges shall be not greater than the thickness of the panels when a force of 50 pounds per linear foot (plf) (730 N/m) is applied horizontally to one panel at any point up to 42 inches (1067 mm) above the walking surface.

2403.5 Louvered windows or jalousies. Float, wired and patterned glass in louvered windows and jalousies shall be no thinner than nominal $^3/_{16}$ inch (4.8 mm) and no longer than 48 inches (1219 mm). Exposed glass edges shall be smooth.

Wired glass with wire exposed on longitudinal edges shall not be used in louvered windows or jalousies.

Where other glass types are used, the design shall be submitted to the *building official* for approval.

SECTION 2404
WIND, SNOW, SEISMIC AND DEAD LOADS ON GLASS

2404.1 Vertical glass. Glass sloped 15 degrees (0.26 rad) or less from vertical in windows, curtain and window walls, doors and other exterior applications shall be designed to resist the wind loads due to ultimate design wind speed, V_{ult}, in Section 1609 for components and cladding. Glass in glazed curtain walls, glazed storefronts and glazed partitions shall meet the seismic requirements of ASCE 7, Section 13.5.9. The load resistance of glass under uniform load shall be determined in accordance with ASTM E 1300.

The design of vertical glazing shall be based on Equation 24-1.

$$0.6F_{gw} \leq F_{ga} \qquad \textbf{(Equation 24-1)}$$

where:

F_{gw} = Wind load on the glass due to ultimate design wind speed, V_{ult}, computed in accordance with Section 1609.

F_{ga} = Short duration load on the glass as determined in accordance with ASTM E 1300.

2404.2 Sloped glass. Glass sloped more than 15 degrees (0.26 rad) from vertical in skylights, sunrooms, sloped roofs and other exterior applications shall be designed to resist the most critical combinations of loads determined by Equations 24-2, 24-3 and 24-4.

$$F_g = 0.6W_o - D \qquad \textbf{(Equation 24-2)}$$

$$F_g = 0.6W_i + D + 0.5\,S \qquad \textbf{(Equation 24-3)}$$

$F_g = 0.3\ W_i + D + S$ **(Equation 24-4)**

where:

D = Glass dead load psf (kN/m^2).

For glass sloped 30 degrees (0.52 rad) or less from horizontal,

= 13 t_g (For SI: 0.0245 t_g).

For glass sloped more than 30 degrees (0.52 rad) from horizontal,

= 13 $t_g \cos\theta$ (For SI: 0.0245 $t_g \cos\theta$).

F_g = Total load, psf (kN/m^2) on glass.

S = Snow load, psf (kN/m^2) as determined in Section 1608.

t_g = Total glass thickness, inches (mm) of glass panes and plies.

W_i = Inward wind force, psf (kN/m^2) due to ultimate design wind speed, V_{ult}, as calculated in Section 1609.

W_o = Outward wind force, psf (kN/m^2) due to ultimate design wind speed, V_{ult}, as calculated in Section 1609.

θ = Angle of slope from horizontal.

Exception: The performance grade rating of unit skylights and tubular daylighting devices shall be determined in accordance with Section 2405.5.

The design of sloped glazing shall be based on Equation 24-5.

$F_g \le F_{ga}$ **(Equation 24-5)**

where:

F_g = Total load on the glass as determined by Equations 24-2, 24-3 and 24-4.

F_{ga} = Short duration load resistance of the glass as determined in accordance with ASTM E 1300 for Equations 24-2 and 24-3; or the long duration load resistance of the glass as determined in accordance with ASTM E 1300 for Equation 24-4.

2404.3 Wired, patterned and sandblasted glass.

2404.3.1 Vertical wired glass. Wired glass sloped 15 degrees (0.26 rad) or less from vertical in windows, curtain and window walls, doors and other exterior applications shall be designed to resist the wind loads in Section 1609 for components and cladding according to the following equation:

$0.6F_{gw} < 0.5\ F_{ge}$ **(Equation 24-6)**

where:

F_{gw} = Wind load on the glass due to ultimate design wind speed, V_{ult}, computed in accordance with Section 1609.

F_{ge} = Nonfactored load from ASTM E 1300 using a thickness designation for monolithic glass that is not greater than the thickness of wired glass.

2404.3.2 Sloped wired glass. Wired glass sloped more than 15 degrees (0.26 rad) from vertical in skylights, sunspaces, sloped roofs and other exterior applications shall be designed to resist the most critical of the combinations of loads from Section 2404.2.

For Equations 24-2 and 24-3:

$F_g < 0.5\ F_{ge}$ **(Equation 24-7)**

For Equation 24-4:

$F_g < 0.3\ F_{ge}$ **(Equation 24-8)**

where:

F_g = Total load on the glass as determined by Equations 24-2, 24-3 and 24-4.

F_{ge} = Nonfactored load in accordance with ASTM E 1300.

2404.3.3 Vertical patterned glass. Patterned glass sloped 15 degrees (0.26 rad) or less from vertical in windows, curtain and window walls, doors and other exterior applications shall be designed to resist the wind loads in Section 1609 for components and cladding according to Equation 24-9.

$F_{gw} < 1.0\ F_{ge}$ **(Equation 24-9)**

where:

F_{gw} = Wind load on the glass due to ultimate design wind speed, V_{ult}, computed in accordance with Section 1609.

F_{ge} = Nonfactored load in accordance with ASTM E 1300. The value for patterned glass shall be based on the thinnest part of the glass. Interpolation between nonfactored load charts in ASTM E 1300 shall be permitted.

2404.3.4 Sloped patterned glass. Patterned glass sloped more than 15 degrees (0.26 rad) from vertical in skylights, sunspaces, sloped roofs and other exterior applications shall be designed to resist the most critical of the combinations of loads from Section 2404.2.

For Equations 24-2 and 24-3:

$F_g < 1.0\ F_{ge}$ **(Equation 24-10)**

For Equation 24-4:

$F_g < 0.6F_{ge}$ **(Equation 24-11)**

where:

F_g = Total load on the glass as determined by Equations 24-2, 24-3 and 24-4.

F_{ge} = Nonfactored load in accordance with ASTM E 1300. The value for patterned glass shall be based on the thinnest part of the glass. Interpolation between the nonfactored load charts in ASTM E 1300 shall be permitted.

2404.3.5 Vertical sandblasted glass. Sandblasted glass sloped 15 degrees (0.26 rad) or less from vertical in windows, curtain and window walls, doors, and other exterior applications shall be designed to resist the wind loads in Section 1609 for components and cladding according to Equation 24-12.

$0.6F_{gw} < 0.5\ F_{ge}$ **(Equation 24-12)**

where:

F_g = Wind load on the glass due to ultimate design wind speed, V_{ult}, computed in accordance with Section 1609.

F_{ge} = Nonfactored load in accordance with ASTM E 1300. The value for sandblasted glass is for moderate levels of sandblasting.

2404.4 Other designs. For designs outside the scope of this section, an analysis or test data for the specific installation shall be prepared by a *registered design professional.*

SECTION 2405
SLOPED GLAZING AND SKYLIGHTS

2405.1 Scope. This section applies to the installation of glass and other transparent, translucent or opaque glazing material installed at a slope more than 15 degrees (0.26 rad) from the vertical plane, including glazing materials in skylights, roofs and sloped walls.

2405.2 Allowable glazing materials and limitations. Sloped glazing shall be any of the following materials, subject to the listed limitations.

1. For monolithic glazing systems, the glazing material of the single light or layer shall be laminated glass with a minimum 30-mil (0.76 mm) polyvinyl butyral (or equivalent) interlayer, wired glass, light-transmitting plastic materials meeting the requirements of Section 2607, heat-strengthened glass or fully tempered glass.
2. For multiple-layer glazing systems, each light or layer shall consist of any of the glazing materials specified in Item 1 above.

Annealed glass is permitted to be used as specified in Exceptions 2 and 3 of Section 2405.3.

For additional requirements for plastic skylights, see Section 2610. Glass-block construction shall conform to the requirements of Section 2110.1.

2405.3 Screening. Where used in monolithic glazing systems, heat-strengthened and fully tempered glass shall have screens installed below the glazing material. The screens and their fastenings shall: (1) be capable of supporting twice the weight of the glazing; (2) be firmly and substantially fastened to the framing members and (3) be installed within 4 inches (102 mm) of the glass. The screens shall be constructed of a noncombustible material not thinner than No. 12 B&S gage (0.0808 inch) with mesh not larger than 1 inch by 1 inch (25 mm by 25 mm). In a corrosive atmosphere, structurally equivalent noncorrosive screen materials shall be used. Heat-strengthened glass, fully tempered glass and wired glass, when used in multiple-layer glazing systems as the bottom glass layer over the walking surface, shall be equipped with screening that conforms to the requirements for monolithic glazing systems.

Exception: In monolithic and multiple-layer sloped glazing systems, the following applies:

1. Fully tempered glass installed without protective screens where glazed between intervening floors at a slope of 30 degrees (0.52 rad) or less from the vertical plane shall have the highest point of the glass 10 feet (3048 mm) or less above the walking surface.
2. Screens are not required below any glazing material, including annealed glass, where the walking surface below the glazing material is permanently protected from the risk of falling glass or the area below the glazing material is not a walking surface.
3. Any glazing material, including annealed glass, is permitted to be installed without screens in the sloped glazing systems of commercial or detached noncombustible greenhouses used exclusively for growing plants and not open to the public, provided that the height of the greenhouse at the ridge does not exceed 30 feet (9144 mm) above grade.
4. Screens shall not be required in individual *dwelling units* in Groups R-2, R-3 and R-4 where fully tempered glass is used as single glazing or as both panes in an insulating glass unit, and the following conditions are met:
   - 4.1. Each pane of the glass is 16 square feet (1.5 m^2) or less in area.
   - 4.2. The highest point of the glass is 12 feet (3658 mm) or less above any walking surface or other accessible area.
   - 4.3. The glass thickness is $^3/_{16}$ inch (4.8 mm) or less.
5. Screens shall not be required for laminated glass with a 15-mil (0.38 mm) polyvinyl butyral (or equivalent) interlayer used in individual *dwelling units* in Groups R-2, R-3 and R-4 within the following limits:
   - 5.1. Each pane of glass is 16 square feet (1.5 m^2) or less in area.
   - 5.2. The highest point of the glass is 12 feet (3658 mm) or less above a walking surface or other accessible area.

2405.4 Framing. In Type I and II construction, sloped glazing and skylight frames shall be constructed of noncombustible materials. In structures where acid fumes deleterious to metal are incidental to the use of the buildings, *approved* pressure-treated wood or other *approved* noncorrosive materials are permitted to be used for sash and frames. Framing supporting sloped glazing and skylights shall be designed to resist the tributary roof loads in Chapter 16. Skylights set at an angle of less than 45 degrees (0.79 rad) from the horizontal plane shall be mounted at least 4 inches (102 mm) above the plane of the roof on a curb constructed as required for the frame. Skylights shall not be installed in the plane of the roof where the roof pitch is less than 45 degrees (0.79 rad) from the horizontal.

Exception: Installation of a skylight without a curb shall be permitted on roofs with a minimum slope of 14 degrees (three units vertical in 12 units horizontal) in Group R-3 occupancies. All unit skylights installed in a roof with a pitch flatter than 14 degrees (0.25 rad) shall be mounted at

least 4 inches (102 mm) above the plane of the roof on a curb constructed as required for the frame unless otherwise specified in the manufacturer's installation instructions.

2405.5 Unit skylights and tubular daylighting devices. Unit skylights and tubular daylighting devices shall be tested and labeled as complying with AAMA/WDMA/CSA 101/I.S./A440. The *label* shall state the name of the manufacturer, the *approved* labeling agency, the product designation and the performance grade rating as specified in AAMA/WDMA/CSA 101/I.S.2/A440. Where the product manufacturer has chosen to have the performance grade of the skylight rated separately for positive and negative design pressure, then the *label* shall state both performance grade ratings as specified in AAMA/WDMA/CSA 101/I.S.2/A440 and the skylight shall comply with Section 2405.5.2. Where the skylight is not rated separately for positive and negative pressure, then the performance grade rating shown on the *label* shall be the performance grade rating determined in accordance with AAMA/WDMA/CSA 101/I.S.2/A440 for both positive and negative design pressure and the skylight shall conform to Section 2405.5.1.

2405.5.1 Skylights rated for the same performance grade for both positive and negative design pressure. The design of skylights shall be based on Equation 24-13.

$$F_g \leq PG \qquad \textbf{(Equation 24-13)}$$

where:

F_g = Maximum load on the skylight determined from Equations 24-2 through 24-4 in Section 2404.2.

PG = Performance grade rating of the skylight.

2405.5.2 Skylights rated for separate performance grades for positive and negative design pressure. The design of skylights rated for performance grade for both positive and negative design pressures shall be based on Equations 24-14 and 24-15.

$$F_{gi} \leq PG_{Po} \qquad \textbf{(Equation 24-14)}$$

$$F_{go} \leq PG_{Ne} \qquad \textbf{(Equation 24-15)}$$

where:

PG_{Pos} = Performance grade rating of the skylight under positive design pressure;

PG_{Neg} = Performance grade rating of the skylight under negative design pressure; and

F_{gi} and F_{go} are determined in accordance with the following:

For $0.6W_o \geq D$,

where:

W_o = Outward wind force, psf (kN/m^2) due to ultimate design wind speed, V_{ult}, as calculated in Section 1609.

D = The dead weight of the glazing, psf (kN/m^2) as determined in Section 2404.2 for glass, or by the weight of the plastic, psf (kN/m^2) for plastic glazing.

F_{gi} = Maximum load on the skylight determined from Equations 24-3 and 24-4 in Section 2404.2.

F_{go} = Maximum load on the skylight determined from Equation 24-2.

For $0.6\ W_o < D$,

where:

W_o = The outward wind force, psf (kN/m^2) due to ultimate design wind speed, V_{ult}, as calculated in Section 1609.

D = The dead weight of the glazing, psf (kN/m^2) as determined in Section 2404.2 for glass, or by the weight of the plastic for plastic glazing.

F_{gi} = Maximum load on the skylight determined from Equations 24-2 through 24-4 in Section 2404.2.

F_{go} = 0.

SECTION 2406
SAFETY GLAZING

2406.1 Human impact loads. Individual glazed areas, including glass mirrors, in hazardous locations as defined in Section 2406.4 shall comply with Sections 2406.1.1 through 2406.1.4.

Exception: Mirrors and other glass panels mounted or hung on a surface that provides a continuous backing support.

2406.1.1 Impact test. Except as provided in Sections 2406.1.2 through 2406.1.4, all glazing shall pass the impact test requirements of Section 2406.2.

2406.1.2 Plastic glazing. Plastic glazing shall meet the weathering requirements of ANSI Z97.1.

2406.1.3 Glass block. Glass-block walls shall comply with Section 2101.2.5.

2406.1.4 Louvered windows and jalousies. Louvered windows and jalousies shall comply with Section 2403.5.

2406.2 Impact test. Where required by other sections of this code, glazing shall be tested in accordance with CPSC 16 CFR Part 1201. Glazing shall comply with the test criteria for Category II, unless otherwise indicated in Table 2406.2(1).

Exception: Glazing not in doors or enclosures for hot tubs, whirlpools, saunas, steam rooms, bathtubs and showers shall be permitted to be tested in accordance with ANSI Z97.1. Glazing shall comply with the test criteria for Class A, unless otherwise indicated in Table 2406.2(2).

2406.3 Identification of safety glazing. Except as indicated in Section 2406.3.1, each pane of safety glazing installed in hazardous locations shall be identified by a manufacturer's designation specifying who applied the designation, the manufacturer or installer and the safety glazing standard with which it complies, as well as the information specified in Section 2403.1. The designation shall be acid etched, sand blasted, ceramic fired, laser etched, embossed or of a type that once applied, cannot be removed without being

destroyed. A *label* meeting the requirements of this section shall be permitted in lieu of the manufacturer's designation.

Exceptions:

1. For other than tempered glass, manufacturer's designations are not required, provided the *building official* approves the use of a certificate, affidavit or other evidence confirming compliance with this code.
2. Tempered spandrel glass is permitted to be identified by the manufacturer with a removable paper designation.

2406.3.1 Multipane assemblies. Multipane glazed assemblies having individual panes not exceeding 1 square foot (0.09 m^2) in exposed areas shall have at least one pane in the assembly marked as indicated in Section 2406.3. Other panes in the assembly shall be marked "CPSC 16 CFR Part 1201" or "ANSI Z97.1," as appropriate.

2406.4 Hazardous locations. The locations specified in Sections 2406.4.1 through 2406.4.7 shall be considered specific hazardous locations requiring safety glazing materials.

2406.4.1 Glazing in doors. Glazing in all fixed and operable panels of swinging, sliding and bifold doors shall be considered a hazardous location.

Exceptions:

1. Glazed openings of a size through which a 3-inch-diameter (76 mm) sphere is unable to pass.
2. Decorative glazing.
3. Glazing materials used as curved glazed panels in revolving doors.
4. Commercial refrigerated cabinet glazed doors.

2406.4.2 Glazing adjacent to doors. Glazing in an individual fixed or operable panel adjacent to a door where the nearest vertical edge of the glazing is within a 24-inch (610 mm) arc of either vertical edge of the door in a closed position and where the bottom exposed edge of the glazing is less than 60 inches (1524 mm) above the walking surface shall be considered a hazardous location.

Exceptions:

1. Decorative glazing.
2. Where there is an intervening wall or other permanent barrier between the door and glazing.
3. Where access through the door is to a closet or storage area 3 feet (914 mm) or less in depth. Glazing in this application shall comply with Section 2406.4.3.
4. Glazing in walls on the latch side of and perpendicular to the plane of the door in a closed position in one- and two-family dwellings or within dwelling units in Group R-2.

2406.4.3 Glazing in windows. Glazing in an individual fixed or operable panel that meets all of the following conditions shall be considered a hazardous location:

1. The exposed area of an individual pane is greater than 9 square feet (0.84 m^2).
2. The bottom edge of the glazing is less than 18 inches (457 mm) above the floor.
3. The top edge of the glazing is greater than 36 inches (914 mm) above the floor.
4. One or more walking surface(s) are within 36 inches (914 mm), measured horizontally and in a straight line, of the plane of the glazing.

Exceptions:

1. Decorative glazing.
2. Where a horizontal rail is installed on the accessible side(s) of the glazing 34 to 38 inches (864 to 965 mm) above the walking surface. The rail shall be capable of withstanding a horizontal load of 50 pounds per linear foot (730 N/m) without contacting the glass and be a minimum of $1^1/_2$ inches (38 mm) in cross-sectional height.

TABLE 2406.2(1)
MINIMUM CATEGORY CLASSIFICATION OF GLAZING USING CPSC 16 CFR PART 1201

EXPOSED SURFACE AREA OF ONE SIDE OF ONE LITE	GLAZING IN STORM OR COMBINATION DOORS (Category class)	GLAZING IN DOORS (Category class)	GLAZED PANELS REGULATED BY SECTION 2406.4.3 (Category class)	GLAZED PANELS REGULATED BY SECTION 2406.4.2 (Category class)	DOORS AND ENCLOSURES REGULATED BY SECTION 2406.4.5 (Category class)	SLIDING GLASS DOORS PATIO TYPE (Category class)
9 square feet or less	I	I	No requirement	I	II	II
More than 9 square feet	II	II	II	II	II	II

For SI: 1 square foot = 0.0929 m^2.

TABLE 2406.2(2)
MINIMUM CATEGORY CLASSIFICATION OF GLAZING USING ANSI Z97.1

EXPOSED SURFACE AREA OF ONE SIDE OF ONE LITE	GLAZED PANELS REGULATED BY SECTION 2406.4.3 (Category class)	GLAZED PANELS REGULATED BY SECTION 2406.4.2 (Category class)	DOORS AND ENCLOSURES REGULATED BY SECTION 2406.4.5[a] (Category class)
9 square feet or less	No requirement	B	A
More than 9 square feet	A	A	A

For SI: square foot = 0.0929 m^2.

a. Use is only permitted by the exception to Section 2406.2.

3. Outboard panes in insulating glass units or multiple glazing where the bottom exposed edge of the glass is 25 feet (7620 mm) or more above any grade, roof, walking surface or other horizontal or sloped (within 45 degrees of horizontal) (0.79 rad) surface adjacent to the glass exterior.

2406.4.4 Glazing in guards and railings. Glazing in *guards* and railings, including structural baluster panels and nonstructural in-fill panels, regardless of area or height above a walking surface shall be considered a hazardous location.

2406.4.5 Glazing and wet surfaces. Glazing in walls, enclosures or fences containing or facing hot tubs, spas, whirlpools, saunas, steam rooms, bathtubs, showers and indoor or outdoor swimming pools where the bottom exposed edge of the glazing is less than 60 inches (1524 mm) measured vertically above any standing or walking surface shall be considered a hazardous location. This shall apply to single glazing and all panes in multiple glazing.

Exception: Glazing that is more than 60 inches (1524 mm), measured horizontally and in a straight line, from the water's edge of a bathtub, hot tub, spa, whirlpool or swimming pool.

2406.4.6 Glazing adjacent to stairways and ramps. Glazing where the bottom exposed edge of the glazing is less than 60 inches (1524 mm) above the plane of the adjacent walking surface of stairways, landings between flights of stairs and ramps shall be considered a hazardous location.

Exceptions:

1. The side of a stairway, landing or ramp that has a guard complying with the provisions of Sections 1015 and 1607.8, and the plane of the glass is greater than 18 inches (457 mm) from the railing.
2. Glazing 36 inches (914 mm) or more measured horizontally from the walking surface.

2406.4.7 Glazing adjacent to the bottom stairway landing. Glazing adjacent to the landing at the bottom of a stairway where the glazing is less than 60 inches (1524 mm) above the landing and within a 60-inch (1524 mm) horizontal arc that is less than 180 degrees (3.14 rad) from the bottom tread nosing shall be considered a hazardous location.

Exception: Glazing that is protected by a guard complying with Sections 1015 and 1607.8 where the plane of the glass is greater than 18 inches (457 mm) from the guard.

2406.5 Fire department access panels. Fire department glass access panels shall be of tempered glass. For insulating glass units, all panes shall be tempered glass.

SECTION 2407
GLASS IN HANDRAILS AND GUARDS

2407.1 Materials. Glass used in a handrail, guardrail or a *guard* section shall be laminated glass constructed of fully tempered or heat-strengthened glass and shall comply with Category II or CPSC 16 CFR Part 1201 or Class A of ANSI Z97.1. Glazing in railing in-fill panels shall be of an *approved* safety glazing material that conforms to the provisions of Section 2406.1.1. For all glazing types, the minimum nominal thickness shall be $^1/_4$ inch (6.4 mm).

Exception: Single fully tempered glass complying with Category II of CPSC 16 CFR Part 1201 or Class A of ANSI Z97.1 shall be permitted to be used in handrails and guardrails where there is no walking surface beneath them or the walking surface is permanently protected from the risk of falling glass.

2407.1.1 Loads. The panels and their support system shall be designed to withstand the loads specified in Section 1607.8. A design factor of four shall be used for safety.

2407.1.2 Support. Each handrail or *guard* section shall be supported by a minimum of three glass balusters or shall be otherwise supported to remain in place should one baluster panel fail. Glass balusters shall not be installed without an attached handrail or *guard.*

Exception: A top rail shall not be required where the glass balusters are laminated glass with two or more glass plies of equal thickness and the same glass type when *approved* by the *building official*. The panels shall be designed to withstand the loads specified in Section 1607.8.

2407.1.3 Parking garages. Glazing materials shall not be installed in handrails or *guards* in parking garages except for pedestrian areas not exposed to impact from vehicles.

2407.1.4 Glazing in wind-borne debris regions. Glazing installed in in-fill panels or balusters in *wind-borne debris regions* shall comply with the following:

2407.1.4.1 Balusters and in-fill panels. Glass installed in exterior railing in-fill panels or balusters shall be laminated glass complying with Category II of CPSC 16 CFR Part 1201 or Class A of ANSI Z97.1.

2407.1.4.2 Glass supporting top rail. When the top rail is supported by glass, the assembly shall be tested according to the impact requirements of Section 1609.1.2. The top rail shall remain in place after impact.

SECTION 2408
GLAZING IN ATHLETIC FACILITIES

2408.1 General. Glazing in athletic facilities and similar uses subject to impact loads, which forms whole or partial wall sections or which is used as a door or part of a door, shall comply with this section.

2408.2 Racquetball and squash courts.

2408.2.1 Testing. Test methods and loads for individual glazed areas in racquetball and squash courts subject to impact loads shall conform to those of CPSC 16 CFR Part 1201 or ANSI Z97.1 with impacts being applied at a height of 59 inches (1499 mm) above the playing surface to an actual or simulated glass wall installation with fix-

tures, fittings and methods of assembly identical to those used in practice.

Glass walls shall comply with the following conditions:

1. A glass wall in a racquetball or squash court, or similar use subject to impact loads, shall remain intact following a test impact.
2. The deflection of such walls shall be not greater than $1^1/_2$ inches (38 mm) at the point of impact for a drop height of 48 inches (1219 mm).

Glass doors shall comply with the following conditions:

1. Glass doors shall remain intact following a test impact at the prescribed height in the center of the door.
2. The relative deflection between the edge of a glass door and the adjacent wall shall not exceed the thickness of the wall plus $^1/_2$ inch (12.7 mm) for a drop height of 48 inches (1219 mm).

2408.3 Gymnasiums and basketball courts. Glazing in multipurpose gymnasiums, basketball courts and similar athletic facilities subject to human impact loads shall comply with Category II of CPSC 16 CFR Part 1201 or Class A of ANSI Z97.1.

SECTION 2409
GLASS IN WALKWAYS, ELEVATOR HOISTWAYS AND ELEVATOR CARS

2409.1 Glass walkways. Glass installed as a part of a floor/ceiling assembly as a walking surface and constructed with laminated glass shall comply with ASTM E 2751 or with the load requirements specified in Chapter 16. Such assemblies shall comply with the *fire-resistance rating* requirements of this code where applicable.

2409.2 Glass in elevator hoistway enclosures. Glass in elevator hoistway enclosures and hoistway doors shall be laminated glass conforming to ANSI Z97.1 or CPSC 16 CFR Part 1201.

2409.2.1 Fire-resistance-rated hoistways. Glass installed in hoistways and hoistway doors where the hoistway is required to have a fire-resistance rating shall also comply with Section 716.

2409.2.2 Glass hoistway doors. The glass in glass hoistway doors shall be not less than 60 percent of the total visible door panel surface area as seen from the landing side.

2409.3 Visions panels in elevator hoistway doors. Glass in vision panels in elevator hoistway doors shall be permitted to be any transparent glazing material not less than $^1/_4$ inch (6.4 mm) in thickness conforming to Class A in accordance with ANSI Z97.1 or Category II in accordance with CPSC 16 CFR Part 1201. The area of any single vision panel shall be not less than 24 square inches (15 484 mm^2) and the total area of one or more vision panels in any hoistway door shall be not more than 85 square inches (54 839 mm^2).

2409.4 Glass in elevator cars. Glass in elevator cars shall be in accordance with this section.

2409.4.1 Glass types. Glass in elevator car enclosures, glass elevator car doors and glass used for lining walls and ceilings of elevator cars shall be laminated glass conforming to Class A in accordance with ANSI Z97.1 or Category II in accordance with CPSC 16 CFR Part 1201.

Exception: Tempered glass shall be permitted to be used for lining walls and ceilings of elevator cars provided:

1. The glass is bonded to a nonpolymeric coating, sheeting or film backing having a physical integrity to hold the fragments when the glass breaks.
2. The glass is not subjected to further treatment such as sandblasting; etching; heat treatment or painting that could alter the original properties of the glass.
3. The glass is tested to the acceptance criteria for laminated glass as specified for Class A in accordance with ANSI Z97.1 or Category II in accordance with CPSC 16 CFR Part 1201.

2409.4.2 Surface area. The glass in glass elevator car doors shall be not less than 60 percent of the total visible door panel surface area as seen from the car side of the doors.

CHAPTER 25

GYPSUM BOARD, GYPSUM PANEL PRODUCTS AND PLASTER

User note: Code change proposals to this chapter will be considered by the IBC – Structural Code Development Committee during the 2016 (Group B) Code Development Cycle. See explanation on page iv.

SECTION 2501 GENERAL

2501.1 Scope. Provisions of this chapter shall govern the materials, design, construction and quality of gypsum board, gypsum panel products, lath, gypsum plaster, cement plaster and reinforced gypsum concrete.

2501.2 Performance. Lathing, plastering, gypsum board and gypsum panel product construction shall be done in the manner and with the materials specified in this chapter and, when required for fire protection, shall also comply with the provisions of Chapter 7.

2501.3 Other materials. Other *approved* wall or ceiling coverings shall be permitted to be installed in accordance with the recommendations of the manufacturer and the conditions of approval.

SECTION 2502 DEFINITIONS

2502.1 Definitions. The following terms are defined in Chapter 2:

CEMENT PLASTER.

EXTERIOR SURFACES.

GYPSUM BOARD.

GYPSUM PANEL PRODUCTS.

GYPSUM PLASTER.

GYPSUM VENEER PLASTER.

INTERIOR SURFACES.

WEATHER-EXPOSED SURFACES.

WIRE BACKING.

SECTION 2503 INSPECTION

2503.1 Inspection. Lath, gypsum board and gypsum panel products shall be inspected in accordance with Section 110.3.5.

SECTION 2504 VERTICAL AND HORIZONTAL ASSEMBLIES

2504.1 Scope. The following requirements shall be met where construction involves gypsum board, gypsum panel products or lath and plaster in vertical and horizontal assemblies.

2504.1.1 Wood framing. Wood supports for lath, gypsum board or gypsum panel products, as well as wood stripping or furring, shall be not less than 2 inches (51 mm) nominal thickness in the least dimension.

Exception: The minimum nominal dimension of wood furring strips installed over solid backing shall be not less than 1 inch by 2 inches (25 mm by 51 mm).

2504.1.2 Studless partitions. The minimum thickness of vertically erected studless solid plaster partitions of $^3/_8$-inch (9.5 mm) and $^3/_4$-inch (19.1 mm) rib metal lath, $^1/_2$-inch-thick (12.7 mm) gypsum lath, gypsum board or gypsum panel product shall be 2 inches (51 mm).

SECTION 2505 SHEAR WALL CONSTRUCTION

2505.1 Resistance to shear (wood framing). Wood-frame shear walls sheathed with gypsum board, gypsum panel products or lath and plaster shall be designed and constructed in accordance with Section 2306.3 and are permitted to resist wind and seismic loads. Walls resisting seismic loads shall be subject to the limitations in Section 12.2.1 of ASCE 7.

2505.2 Resistance to shear (steel framing). Cold-formed steel-frame shear walls sheathed with gypsum board or gypsum panel products and constructed in accordance with the materials and provisions of Section 2211.6 are permitted to resist wind and seismic loads. Walls resisting seismic loads shall be subject to the limitations in Section 12.2.1 of ASCE 7.

SECTION 2506 GYPSUM BOARD AND GYPSUM PANEL PRODUCT MATERIALS

2506.1 General. Gypsum board, gypsum panel products and accessories shall be identified by the manufacturer's designation to indicate compliance with the appropriate standards referenced in this section and stored to protect such materials from the weather.

2506.2 Standards. Gypsum board and gypsum panel products shall conform to the appropriate standards listed in Table 2506.2 and Chapter 35 and, where required for fire protection, shall conform to the provisions of Chapter 7.

2506.2.1 Other materials. Metal suspension systems for acoustical and lay-in panel ceilings shall comply with ASTM C 635 listed in Chapter 35 and Section 13.5.6 of ASCE 7 for installation in high seismic areas.

SECTION 2507
LATHING AND PLASTERING

2507.1 General. Lathing and plastering materials and accessories shall be marked by the manufacturer's designation to indicate compliance with the appropriate standards referenced in this section and stored in such a manner to protect them from the weather.

2507.2 Standards. Lathing and plastering materials shall conform to the standards listed in Table 2507.2 and Chapter 35 and, where required for fire protection, shall also conform to the provisions of Chapter 7.

SECTION 2508
GYPSUM CONSTRUCTION

2508.1 General. Gypsum board, gypsum panel products and gypsum plaster construction shall be of the materials listed in Tables 2506.2 and 2507.2. These materials shall be assembled and installed in compliance with the appropriate standards listed in Tables 2508.1 and 2511.1.1 and Chapter 35.

TABLE 2506.2
GYPSUM BOARD AND GYPSUM PANEL PRODUCTS MATERIALS AND ACCESSORIES

MATERIAL	STANDARD
Cold-formed steel studs and track, structural	AISI S200 and ASTM C 955, Section 8
Cold-formed steel studs and track, nonstructural	AISI S220 and ASTM C 645, Section 10
Elastomeric joint sealants	ASTM C 920
Fiber-reinforced gypsum panels	ASTM C 1278
Glass mat gypsum backing panel	ASTM C 1178
Glass mat gypsum panel 5	ASTM C 1658
Glass mat gypsum substrate	ASTM C 1177
Joint reinforcing tape and compound	ASTM C 474; C 475
Nails for gypsum boards	ASTM C 514, F 547, F 1667
Steel screws	ASTM C 954; C 1002
Standard specification for gypsum board	ASTM C 1396
Testing gypsum and gypsum products	ASTM C 22; C 472; C 473

TABLE 2507.2
LATH, PLASTERING MATERIALS AND ACCESSORIES

MATERIAL	STANDARD
Cold-formed steel studs and track, structural	AISI S200 and ASTM C 955, Section 8
Cold-formed steel studs and track, nonstructural	AISI S220 and ASTM C 645, Section 10
Hydraulic cement	ASTM C 1157; C 1600
Gypsum casting and molding plaster	ASTM C 59
Gypsum Keene's cement	ASTM C 61
Gypsum plaster	ASTM C 28
Gypsum veneer plaster	ASTM C 587
Interior bonding compounds, gypsum	ASTM C 631
Lime plasters	ASTM C 5; C 206
Masonry cement	ASTM C 91
Metal lath	ASTM C 847
Plaster aggregates	
Sand	ASTM C 35; C 897
Perlite	ASTM C 35
Vermiculite	ASTM C 35
Plastic cement	ASTM C 1328
Portland cement	ASTM C 150
Steel screws	ASTM C 1002; C 954
Welded wire lath	ASTM C 933
Woven wire plaster base	ASTM C 1032

TABLE 2508.1
INSTALLATION OF GYPSUM CONSTRUCTION

MATERIAL	STANDARD
Gypsum board and gypsum panel products	GA-216; ASTM C 840
Gypsum sheathing and gypsum panel products	ASTM C 1280
Gypsum veneer base	ASTM C 844
Interior lathing and furring	ASTM C 841
Steel framing for gypsum board and gypsum panel products	ASTM C 754; C 1007

2508.2 Limitations. Gypsum wallboard or gypsum plaster shall not be used in any exterior surface where such gypsum construction will be exposed directly to the weather. Gypsum wallboard shall not be used where there will be direct exposure to water or continuous high humidity conditions. Gypsum sheathing shall be installed on exterior surfaces in accordance with ASTM C 1280.

2508.2.1 Weather protection. Gypsum wallboard, gypsum lath or gypsum plaster shall not be installed until weather protection for the installation is provided.

2508.3 Single-ply application. Edges and ends of gypsum board and gypsum panel products shall occur on the framing members, except those edges and ends that are perpendicular to the framing members. Edges and ends of gypsum board and gypsum panel products shall be in moderate contact except in concealed spaces where fire-resistance-rated construction, shear resistance or diaphragm action is not required.

2508.4 Joint treatment. Gypsum board and gypsum panel product fire-resistance-rated assemblies shall have joints and fasteners treated.

Exception: Joint and fastener treatment need not be provided where any of the following conditions occur:

1. Where the gypsum board or the gypsum panel product is to receive a decorative finish such as wood paneling, battens, acoustical finishes or any similar application that would be equivalent to joint treatment.
2. On single-layer systems where joints occur over wood framing members.
3. Square edge or tongue-and-groove edge gypsum board (V-edge), gypsum panel products, gypsum backing board or gypsum sheathing.
4. On multilayer systems where the joints of adjacent layers are offset.
5. Assemblies tested without joint treatment.

2508.5 Horizontal gypsum board or gypsum panel product diaphragm ceilings. Gypsum board or gypsum panel products shall be permitted to be used on wood joists to create a horizontal diaphragm ceiling in accordance with Table 2508.5.

2508.5.1 Diaphragm proportions. The maximum allowable diaphragm proportions shall be $1^1/_2$:1 between shear resisting elements. Rotation or cantilever conditions shall not be permitted.

2508.5.2 Installation. Gypsum board or gypsum panel products used in a horizontal diaphragm ceiling shall be installed perpendicular to ceiling framing members. End joints of adjacent courses of gypsum board shall not occur on the same joist.

2508.5.3 Blocking of perimeter edges. Perimeter edges shall be blocked using a wood member not less than 2-inch by 6-inch (51 mm by 152 mm) nominal dimension. Blocking material shall be installed flat over the top plate of the wall to provide a nailing surface not less than 2 inches (51 mm) in width for the attachment of the gypsum board or gypsum panel product.

2508.5.4 Fasteners. Fasteners used for the attachment of gypsum board or gypsum panel products to a horizontal diaphragm ceiling shall be as defined in Table 2508.5. Fasteners shall be spaced not more than 7 inches (178 mm) on center at all supports, including perimeter blocking, and not more than $^3/_8$ inch (9.5 mm) from the edges and ends of the gypsum board or gypsum panel product.

2508.5.5 Lateral force restrictions. Gypsum board or gypsum panel products shall not be used in diaphragm ceilings to resist lateral forces imposed by masonry or concrete construction.

TABLE 2508.5
SHEAR CAPACITY FOR HORIZONTAL WOOD-FRAME GYPSUM BOARD DIAPHRAGM CEILING ASSEMBLIES

MATERIAL	THICKNESS OF MATERIAL (MINIMUM) (inches)	SPACING OF FRAMING MEMBERS (inches)	SHEAR VALUE[a, b] (PLF OF CEILING)	MIMIMUM FASTENER SIZE
Gypsum board or gypsum panel product	$^1/_2$	16 o.c.	90	5d cooler or wallboard nail; $1^5/_8$-inch long; 0.086-inch shank; $^{15}/_{64}$-inch head[c]
Gypsum board or gypsum panel product	$^1/_2$	24 o.c.	70	5d cooler or wallboard nail; $1^5/_8$-inch long; 0.086-inch shank; $^{15}/_{64}$-inch head[c]

For SI: 1 inch = 25.4 mm, 1 pound per foot = 14.59 N/m.

a. Values are not cumulative with other horizontal diaphragm values and are for short-term wind or seismic loading. Values shall be reduced 25 percent for normal loading.

b. Values shall be reduced 50 percent in Seismic Design Categories D, E and F.

c. $1^1/_4$-inch, No. 6 Type S or W screws are permitted to be substituted for the listed nails.

SECTION 2509
SHOWERS AND WATER CLOSETS

2509.1 Wet areas. Showers and public toilet walls shall conform to Section 1210.2.

2509.2 Base for tile. Materials used as a base for wall tile in tub and shower areas and wall and ceiling panels in shower areas shall be of materials listed in Table 2509.2 and installed in accordance with the manufacturer's recommendations. Water-resistant gypsum backing board shall be used as a base for tile in water closet compartment walls when installed in accordance with GA-216 or ASTM C 840 and the manufacturer's recommendations. Regular gypsum wallboard is permitted under tile or wall panels in other wall and ceiling areas when installed in accordance with GA-216 or ASTM C 840.

TABLE 2509.2
BACKERBOARD MATERIALS

MATERIAL	STANDARD
Glass mat gypsum backing panel	ASTM C 1178
Nonasbestos fiber-cement backer board	ASTM C 1288 or ISO 8336, Category C
Nonasbestos fiber-mat reinforced cementitious backer unit	ASTM C 1325

2509.3 Limitations. Water-resistant gypsum backing board shall not be used in the following locations:

1. Over a vapor retarder in shower or bathtub compartments.
2. Where there will be direct exposure to water or in areas subject to continuous high humidity.

SECTION 2510
LATHING AND FURRING FOR CEMENT PLASTER (STUCCO)

2510.1 General. Exterior and interior cement plaster and lathing shall be done with the appropriate materials listed in Table 2507.2 and Chapter 35.

2510.2 Weather protection. Materials shall be stored in such a manner as to protect them from the weather.

2510.3 Installation. Installation of these materials shall be in compliance with ASTM C 926 and ASTM C 1063.

2510.4 Corrosion resistance. Metal lath and lath attachments shall be of corrosion-resistant material.

2510.5 Backing. Backing or a lath shall provide sufficient rigidity to permit plaster applications.

2510.5.1 Support of lath. Where lath on vertical surfaces extends between rafters or other similar projecting members, solid backing shall be installed to provide support for lath and attachments.

2510.5.2 Use of gypsum backing board. Gypsum backing for cement plaster shall be in accordance with Section 2510.5.2.1 or 2510.5.2.2.

2510.5.2.1 Gypsum board as a backing board. Gypsum lath or gypsum wallboard shall not be used as a backing for cement plaster.

Exception: Gypsum lath or gypsum wallboard is permitted, with a *water-resistive barrier*, as a backing for self-furred metal lath or self-furred wire fabric lath and cement plaster where either of the following conditions occur:

1. On horizontal supports of ceilings or roof soffits.
2. On interior walls.

2510.5.2.2 Gypsum sheathing backing. Gypsum sheathing is permitted as a backing for metal or wire fabric lath and cement plaster on walls. A *water-resistive barrier* shall be provided in accordance with Section 2510.6.

2510.5.3 Backing not required. Wire backing is not required under expanded metal lath or paperbacked wire fabric lath.

2510.6 Water-resistive barriers. *Water-resistive barriers* shall be installed as required in Section 1404.2 and, where applied over wood-based sheathing, shall include a water-resistive vapor-permeable barrier with a performance at least equivalent to two layers of *water-resistive barrier* complying with ASTM E 2556, Type I. The individual layers shall be installed independently such that each layer provides a separate continuous plane and any flashing (installed in accordance with Section 1405.4) intended to drain to the *water-resistive barrier* is directed between the layers.

Exception: Where the *water-resistive barrier* that is applied over wood-based sheathing has a water resistance equal to or greater than that of a *water-resistive barrier* complying with ASTM E 2556, Type II and is separated from the stucco by an intervening, substantially nonwater-absorbing layer or drainage space.

2510.7 Preparation of masonry and concrete. Surfaces shall be clean, free from efflorescence, sufficiently damp and rough for proper bond. If the surface is insufficiently rough, *approved* bonding agents or a Portland cement dash bond coat mixed in proportions of not more than two parts volume of sand to one part volume of Portland cement or plastic cement shall be applied. The dash bond coat shall be left undisturbed and shall be moist cured not less than 24 hours.

SECTION 2511
INTERIOR PLASTER

2511.1 General. Plastering gypsum plaster or cement plaster shall be not less than three coats where applied over metal lath or wire fabric lath and not less than two coats where applied over other bases permitted by this chapter.

Exception: Gypsum veneer plaster and cement plaster specifically designed and *approved* for one-coat applications.

2511.1.1 Installation. Installation of lathing and plaster materials shall conform to Table 2511.1.1 and Section 2507.

TABLE 2511.1.1
INSTALLATION OF PLASTER CONSTRUCTION

MATERIAL	STANDARD
Cement plaster	ASTM C 926
Gypsum plaster	ASTM C 842
Gypsum veneer plaster	ASTM C 843
Interior lathing and furring (gypsum plaster)	ASTM C 841
Lathing and furring (cement plaster)	ASTM C 1063
Steel framing	ASTM C 754; C 1007

2511.2 Limitations. Plaster shall not be applied directly to fiber insulation board. Cement plaster shall not be applied directly to gypsum lath or gypsum plaster except as specified in Sections 2510.5.1 and 2510.5.2.

2511.3 Grounds. Where installed, grounds shall ensure the minimum thickness of plaster as set forth in ASTM C 842 and ASTM C 926. Plaster thickness shall be measured from the face of lath and other bases.

2511.4 Interior masonry or concrete. Condition of surfaces shall be as specified in Section 2510.7. *Approved* specially prepared gypsum plaster designed for application to concrete surfaces or *approved* acoustical plaster is permitted. The total thickness of base coat plaster applied to concrete ceilings shall be as set forth in ASTM C 842 or ASTM C 926. Should ceiling surfaces require more than the maximum thickness permitted in ASTM C 842 or ASTM C 926, metal lath or wire fabric lath shall be installed on such surfaces before plastering.

2511.5 Wet areas. Showers and public toilet walls shall conform to Sections 1210.2 and 1210.3. When wood frame walls and partitions are covered on the interior with cement plaster or tile of similar material and are subject to water splash, the framing shall be protected with an *approved* moisture barrier.

SECTION 2512
EXTERIOR PLASTER

2512.1 General. Plastering with cement plaster shall be not less than three coats when applied over metal lath or wire fabric lath or gypsum board backing as specified in Section 2510.5 and shall be not less than two coats when applied over masonry or concrete. If the plaster surface is to be completely covered by veneer or other facing material, or is completely concealed by another wall, plaster application need only be two coats, provided the total thickness is as set forth in ASTM C 926.

2512.1.1 On-grade floor slab. On wood frame or steel stud construction with an on-grade concrete floor slab system, exterior plaster shall be applied in such a manner as to cover, but not to extend below, the lath and paper. The application of lath, paper and flashing or drip screeds shall comply with ASTM C 1063.

2512.1.2 Weep screeds. A minimum 0.019-inch (0.48 mm) (No. 26 galvanized sheet gage), corrosion-resistant weep screed with a minimum vertical attachment flange of $3^1/_2$ inches (89 mm) shall be provided at or below the foundation plate line on exterior stud walls in accordance with ASTM C 926. The weep screed shall be placed a minimum of 4 inches (102 mm) above the earth or 2 inches (51 mm) above paved areas and be of a type that will allow trapped water to drain to the exterior of the building. The *water-resistive barrier* shall lap the attachment flange. The exterior lath shall cover and terminate on the attachment flange of the weep screed.

2512.2 Plasticity agents. Only *approved* plasticity agents and *approved* amounts thereof shall be added to Portland cement or blended cements. When plastic cement or masonry cement is used, no additional lime or plasticizers shall be added. Hydrated lime or the equivalent amount of lime putty used as a plasticizer is permitted to be added to cement plaster or cement and lime plaster in an amount not to exceed that set forth in ASTM C 926.

2512.3 Limitations. Gypsum plaster shall not be used on exterior surfaces.

2512.4 Cement plaster. Plaster coats shall be protected from freezing for a period of not less than 24 hours after set has occurred. Plaster shall be applied when the ambient temperature is higher than 40°F (4°C), unless provisions are made to keep cement plaster work above 40°F (4°C) during application and 48 hours thereafter.

2512.5 Second-coat application. The second coat shall be brought out to proper thickness, rodded and floated sufficiently rough to provide adequate bond for the finish coat. The second coat shall have no variation greater than $^1/_4$ inch (6.4 mm) in any direction under a 5-foot (1524 mm) straight edge.

2512.6 Curing and interval. First and second coats of cement plaster shall be applied and moist cured as set forth in ASTM C 926 and Table 2512.6.

2512.7 Application to solid backings. Where applied over gypsum backing as specified in Section 2510.5 or directly to unit masonry surfaces, the second coat is permitted to be applied as soon as the first coat has attained sufficient hardness.

TABLE 2512.6
CEMENT PLASTERS

COAT	MINIMUM PERIOD MOIST CURING	MINIMUM INTERVAL BETWEEN COATS
First	48 hours[a]	48 hours[b]
Second	48 hours	7 days[c]
Finish	—	Note c

a. The first two coats shall be as required for the first coats of exterior plaster, except that the moist-curing time period between the first and second coats shall be not less than 24 hours. Moist curing shall not be required where job and weather conditions are favorable to the retention of moisture in the cement plaster for the required time period.

b. Twenty-four-hour minimum interval between coats of interior cement plaster. For alternative method of application, see Section 2512.8.

c. Finish coat plaster is permitted to be applied to interior cement plaster base coats after a 48-hour period.

2512.8 Alternate method of application. The second coat is permitted to be applied as soon as the first coat has attained sufficient rigidity to receive the second coat.

2512.8.1 Admixtures. When using this method of application, calcium aluminate cement up to 15 percent of the weight of the Portland cement is permitted to be added to the mix.

2512.8.2 Curing. Curing of the first coat is permitted to be omitted and the second coat shall be cured as set forth in ASTM C 926 and Table 2512.6.

2512.9 Finish coats. Cement plaster finish coats shall be applied over base coats that have been in place for the time periods set forth in ASTM C 926. The third or finish coat shall be applied with sufficient material and pressure to bond and to cover the brown coat and shall be of sufficient thickness to conceal the brown coat.

SECTION 2513
EXPOSED AGGREGATE PLASTER

2513.1 General. Exposed natural or integrally colored aggregate is permitted to be partially embedded in a natural or colored bedding coat of cement plaster or gypsum plaster, subject to the provisions of this section.

2513.2 Aggregate. The aggregate shall be applied manually or mechanically and shall consist of marble chips, pebbles or similar durable, moderately hard (three or more on the Mohs hardness scale), nonreactive materials.

2513.3 Bedding coat proportions. The bedding coat for interior or exterior surfaces shall be composed of one part Portland cement and one part Type S lime; or one part blended cement and one part Type S lime; or masonry cement; or plastic cement and a maximum of three parts of graded white or natural sand by volume. The bedding coat for interior surfaces shall be composed of 100 pounds (45.4 kg) of neat gypsum plaster and a maximum of 200 pounds (90.8 kg) of graded white sand. A factory-prepared bedding coat for interior or exterior use is permitted. The bedding coat for exterior surfaces shall have a minimum compressive strength of 1,000 pounds per square inch (psi) (6895 kPa).

2513.4 Application. The bedding coat is permitted to be applied directly over the first (scratch) coat of plaster, provided the ultimate overall thickness is a minimum of $^7/_8$ inch (22 mm), including lath. Over concrete or masonry surfaces, the overall thickness shall be a minimum of $^1/_2$ inch (12.7 mm).

2513.5 Bases. Exposed aggregate plaster is permitted to be applied over concrete, masonry, cement plaster base coats or gypsum plaster base coats installed in accordance with Section 2511 or 2512.

2513.6 Preparation of masonry and concrete. Masonry and concrete surfaces shall be prepared in accordance with the provisions of Section 2510.7.

2513.7 Curing of base coats. Cement plaster base coats shall be cured in accordance with ASTM C 926. Cement plaster bedding coats shall retain sufficient moisture for hydration (hardening) for 24 hours minimum or, where necessary, shall be kept damp for 24 hours by light water spraying.

**

SECTION 2514
REINFORCED GYPSUM CONCRETE

2514.1 General. Reinforced gypsum concrete shall comply with the requirements of ASTM C 317 and ASTM C 956.

2514.2 Minimum thickness. The minimum thickness of reinforced gypsum concrete shall be 2 inches (51 mm) except the minimum required thickness shall be reduced to $1^1/_2$ inches (38 mm), provided the following conditions are satisfied:

1. The overall thickness, including the formboard, is not less than 2 inches (51 mm).
2. The clear span of the gypsum concrete between supports does not exceed 33 inches (838 mm).
3. Diaphragm action is not required.
4. The design live load does not exceed 40 pounds per square foot (psf) (1915 Pa).

CHAPTER 26

PLASTIC

SECTION 2601
GENERAL

2601.1 Scope. These provisions shall govern the materials, design, application, construction and installation of foam plastic, foam plastic insulation, plastic veneer, interior plastic finish and *trim*, light-transmitting plastics and plastic composites, including plastic lumber. See Chapter 14 for requirements for *exterior wall* finish and *trim*.

SECTION 2602
DEFINITIONS

2602.1 Definitions. The following terms are defined in Chapter 2:

FIBER-REINFORCED POLYMER.

FOAM PLASTIC INSULATION.

LIGHT-DIFFUSING SYSTEM.

LIGHT-TRANSMITTING PLASTIC ROOF PANELS.

LIGHT-TRANSMITTING PLASTIC WALL PANELS.

PLASTIC, APPROVED.

PLASTIC COMPOSITE.

PLASTIC GLAZING.

PLASTIC LUMBER.

THERMOPLASTIC MATERIAL.

THERMOSETTING MATERIAL.

WOOD/PLASTIC COMPOSITE.

SECTION 2603
FOAM PLASTIC INSULATION

2603.1 General. The provisions of this section shall govern the requirements and uses of foam plastic insulation in buildings and structures.

2603.2 Labeling and identification. Packages and containers of foam plastic insulation and foam plastic insulation components delivered to the job site shall bear the *label* of an *approved agency* showing the manufacturer's name, product listing, product identification and information sufficient to determine that the end use will comply with the code requirements.

2603.3 Surface-burning characteristics. Unless otherwise indicated in this section, foam plastic insulation and foam plastic cores of manufactured assemblies shall have a flame spread index of not more than 75 and a smoke-developed index of not more than 450 where tested in the maximum thickness intended for use in accordance with ASTM E 84 or UL 723. Loose fill-type foam plastic insulation shall be tested as board stock for the flame spread and smoke-developed indexes.

Exceptions:

1. Smoke-developed index for interior *trim* as provided for in Section 2604.2.
2. In cold storage buildings, ice plants, food plants, food processing rooms and similar areas, foam plastic insulation where tested in a thickness of 4 inches (102 mm) shall be permitted in a thickness up to 10 inches (254 mm) where the building is equipped throughout with an automatic fire sprinkler system in accordance with Section 903.3.1.1. The approved *automatic sprinkler system* shall be provided in both the room and that part of the building in which the room is located.
3. Foam plastic insulation that is a part of a Class A, B or C roof-covering assembly provided the assembly with the foam plastic insulation satisfactorily passes NFPA 276 or UL 1256. The smoke-developed index shall not be limited for roof applications.
4. Foam plastic insulation greater than 4 inches (102 mm) in thickness shall have a maximum flame spread index of 75 and a smoke-developed index of 450 where tested at a minimum thickness of 4 inches (102 mm), provided the end use is approved in accordance with Section 2603.9 using the thickness and density intended for use.
5. Flame spread and smoke-developed indexes for foam plastic interior signs in *covered and open mall buildings* provided the signs comply with Section 402.6.4.

2603.4 Thermal barrier. Except as provided for in Sections 2603.4.1 and 2603.9, foam plastic shall be separated from the interior of a building by an approved thermal barrier of $^1/_2$-inch (12.7 mm) gypsum wallboard or a material that is tested in accordance with and meets the acceptance criteria of both the Temperature Transmission Fire Test and the Integrity Fire Test of NFPA 275. Combustible concealed spaces shall comply with Section 718.

2603.4.1 Thermal barrier not required. The thermal barrier specified in Section 2603.4 is not required under the conditions set forth in Sections 2603.4.1.1 through 2603.4.1.14.

2603.4.1.1 Masonry or concrete construction. A thermal barrier is not required for foam plastic installed in a masonry or concrete wall, floor or roof system where the foam plastic insulation is covered on each face by not less than 1-inch (25 mm) thickness of masonry or concrete.

2603.4.1.2 Cooler and freezer walls. Foam plastic installed in a maximum thickness of 10 inches (254 mm) in cooler and freezer walls shall:

1. Have a flame spread index of 25 or less and a smoke-developed index of not more than 450, where tested in a minimum 4-inch (102 mm) thickness.
2. Have flash ignition and self-ignition temperatures of not less than 600°F and 800°F (316°C and 427°C), respectively.
3. Have a covering of not less than 0.032-inch (0.8 mm) aluminum or corrosion-resistant steel having a base metal thickness not less than 0.0160 inch (0.4 mm) at any point.
4. Be protected by an *automatic sprinkler system* in accordance with Section 903.3.1.1. Where the cooler or freezer is within a building, both the cooler or freezer and that part of the building in which it is located shall be sprinklered.

2603.4.1.3 Walk-in coolers. In nonsprinklered buildings, foam plastic having a thickness that does not exceed 4 inches (102 mm) and a maximum flame spread index of 75 is permitted in walk-in coolers or freezer units where the aggregate floor area does not exceed 400 square feet (37 m^2) and the foam plastic is covered by a metal facing not less than 0.032-inch-thick (0.81 mm) aluminum or corrosion-resistant steel having a minimum base metal thickness of 0.016 inch (0.41 mm). A thickness of up to 10 inches (254 mm) is permitted where protected by a thermal barrier.

2603.4.1.4 Exterior walls-one-story buildings. For one-*story* buildings, foam plastic having a flame spread index of 25 or less, and a smoke-developed index of not more than 450, shall be permitted without thermal barriers in or on *exterior walls* in a thickness not more than 4 inches (102 mm) where the foam plastic is covered by a thickness of not less than 0.032-inch-thick (0.81 mm) aluminum or corrosion-resistant steel having a base metal thickness of 0.0160 inch (0.41 mm) and the building is equipped throughout with an *automatic sprinkler system* in accordance with Section 903.3.1.1.

2603.4.1.5 Roofing. A thermal barrier is not required for foam plastic insulation that is a part of a Class A, B or C roof-covering assembly that is installed in accordance with the code and the manufacturer's instructions and is either constructed as described in Item 1 or tested as described in Item 2.

1. The roof assembly is separated from the interior of the building by wood structural panel sheathing not less than 0.47 inch (11.9 mm) in thickness bonded with exterior glue, with edges supported by blocking, tongue-and-groove joints, other approved type of edge support or an equivalent material.
2. The assembly with the foam plastic insulation satisfactorily passes NFPA 276 or UL 1256.

2603.4.1.6 Attics and crawl spaces. Within an attic or crawl space where entry is made only for service of utilities, foam plastic insulation shall be protected against ignition by $1^1/_2$-inch-thick (38 mm) mineral fiber insulation; $^1/_4$-inch-thick (6.4 mm) wood structural panel, particleboard or hardboard; $^3/_8$-inch (9.5 mm) gypsum wallboard, corrosion-resistant steel having a base metal thickness of 0.016 inch (0.4 mm); $1^1/_2$-inch-thick (38 mm) self-supported spray-applied cellulose insulation in attic spaces only or other approved material installed in such a manner that the foam plastic insulation is not exposed. The protective covering shall be consistent with the requirements for the type of construction.

2603.4.1.7 Doors not required to have a fire protection rating. Where pivoted or side-hinged doors are permitted without a fire protection rating, foam plastic insulation, having a flame spread index of 75 or less and a smoke-developed index of not more than 450, shall be permitted as a core material where the door facing is of metal having a minimum thickness of 0.032-inch (0.8 mm) aluminum or steel having a base metal thickness of not less than 0.016 inch (0.4 mm) at any point.

2603.4.1.8 Exterior doors in buildings of Group R-2 or R-3. In occupancies classified as Group R-2 or R-3, foam-filled exterior entrance doors to individual *dwelling units* that do not require a fire-resistance rating shall be faced with aluminum, steel, fiberglass, wood or other approved materials.

2603.4.1.9 Garage doors. Where garage doors are permitted without a fire-resistance rating and foam plastic is used as a core material, the door facing shall be metal having a minimum thickness of 0.032-inch (0.8 mm) aluminum or 0.010-inch (0.25 mm) steel or the facing shall be minimum 0.125-inch-thick (3.2 mm) wood. Garage doors having facings other than those described above shall be tested in accordance with, and meet the acceptance criteria of, DASMA 107.

> **Exception:** Garage doors using foam plastic insulation complying with Section 2603.3 in detached and attached garages associated with one- and two-family dwellings need not be provided with a thermal barrier.

2603.4.1.10 Siding backer board. Foam plastic insulation of not more than 2,000 British thermal units per square feet (Btu/sq. ft.) (22.7 mJ/m^2) as determined by NFPA 259 shall be permitted as a siding backer board with a maximum thickness of $^1/_2$ inch (12.7 mm), provided it is separated from the interior of the building by not less than 2 inches (51 mm) of mineral fiber insulation or equivalent or where applied as insulation with residing over existing wall construction.

2603.4.1.11 Interior trim. Foam plastic used as interior *trim* in accordance with Section 2604 shall be permitted without a thermal barrier.

2603.4.1.12 Interior signs. Foam plastic used for interior signs in *covered mall buildings* in accordance with Section 402.6.4 shall be permitted without a thermal barrier. Foam plastic signs that are not affixed to interior building surfaces shall comply with Chapter 8 of the *International Fire Code*.

2603.4.1.13 Type V construction. Foam plastic spray applied to a sill plate, joist header and rim joist in Type V construction is subject to all of the following:

1. The maximum thickness of the foam plastic shall be $3^1/_4$ inches (82.6 mm).
2. The density of the foam plastic shall be in the range of 1.5 to 2.0 pcf (24 to 32 kg/m^3).
3. The foam plastic shall have a flame spread index of 25 or less and an accompanying smoke-developed index of 450 or less when tested in accordance with ASTM E 84 or UL 723.

2603.4.1.14 Floors. The thermal barrier specified in Section 2603.4 is not required to be installed on the walking surface of a structural floor system that contains foam plastic insulation when the foam plastic is covered by a minimum nominal $^1/_2$-inch-thick (12.7 mm) wood structural panel or approved equivalent. The thermal barrier specified in Section 2603.4 is required on the underside of the structural floor system that contains foam plastic insulation when the underside of the structural floor system is exposed to the interior of the building.

Exception: Foam plastic used as part of an interior floor finish.

2603.5 Exterior walls of buildings of any height. *Exterior walls* of buildings of Type I, II, III or IV construction of any height shall comply with Sections 2603.5.1 through 2603.5.7. *Exterior walls* of cold storage buildings required to be constructed of noncombustible materials, where the building is more than one *story* in height, shall comply with the provisions of Sections 2603.5.1 through 2603.5.7. *Exterior walls* of buildings of Type V construction shall comply with Sections 2603.2, 2603.3 and 2603.4.

2603.5.1 Fire-resistance-rated walls. Where the wall is required to have a fire-resistance rating, data based on tests conducted in accordance with ASTM E 119 or UL 263 shall be provided to substantiate that the fire-resistance rating is maintained.

2603.5.2 Thermal barrier. Any foam plastic insulation shall be separated from the building interior by a thermal barrier meeting the provisions of Section 2603.4, unless special approval is obtained on the basis of Section 2603.9.

Exception: One-story buildings complying with Section 2603.4.1.4.

2603.5.3 Potential heat. The potential heat of foam plastic insulation in any portion of the wall or panel shall not exceed the potential heat expressed in Btu per square feet (mJ/m^2) of the foam plastic insulation contained in the wall assembly tested in accordance with Section 2603.5.5. The potential heat of the foam plastic insulation shall be determined by tests conducted in accordance with NFPA 259 and the results shall be expressed in Btu per square feet (mJ/m^2).

Exception: One-story buildings complying with Section 2603.4.1.4.

2603.5.4 Flame spread and smoke-developed indexes. Foam plastic insulation, exterior coatings and facings shall be tested separately in the thickness intended for use, but not to exceed 4 inches (102 mm), and shall each have a flame spread index of 25 or less and a smoke-developed index of 450 or less as determined in accordance with ASTM E 84 or UL 723.

Exception: Prefabricated or factory-manufactured panels having minimum 0.020-inch (0.51 mm) aluminum facings and a total thickness of $^1/_4$ inch (6.4 mm) or less are permitted to be tested as an assembly where the foam plastic core is not exposed in the course of construction.

2603.5.5 Vertical and lateral fire propagation. The exterior wall assembly shall be tested in accordance with and comply with the acceptance criteria of NFPA 285.

Exceptions:

1. One-story buildings complying with Section 2603.4.1.4.
2. Wall assemblies where the foam plastic insulation is covered on each face by not less than 1-inch (25 mm) thickness of masonry or concrete and meeting one of the following:
   - 2.1. There is no airspace between the insulation and the concrete or masonry.
   - 2.2. The insulation has a flame spread index of not more than 25 as determined in accordance with ASTM E 84 or UL 723 and the maximum airspace between the insulation and the concrete or masonry is not more than 1 inch (25 mm).

2603.5.6 Label required. The edge or face of each piece, package or container of foam plastic insulation shall bear the *label* of an *approved agency*. The *label* shall contain the manufacturer's or distributor's identification, model number, serial number or definitive information describing the product or materials' performance characteristics and *approved agency*'s identification.

2603.5.7 Ignition. *Exterior walls* shall not exhibit sustained flaming where tested in accordance with NFPA 268. Where a material is intended to be installed in more than one thickness, tests of the minimum and maximum thickness intended for use shall be performed.

Exception: Assemblies protected on the outside with one of the following:

1. A thermal barrier complying with Section 2603.4.
2. A minimum 1-inch (25 mm) thickness of concrete or masonry.

3. Glass-fiber-reinforced concrete panels of a minimum thickness of $^3/_8$ inch (9.5 mm).
4. Metal-faced panels having minimum 0.019-inch-thick (0.48 mm) aluminum or 0.016-inch-thick (0.41 mm) corrosion-resistant steel outer facings.
5. A minimum $^7/_8$-inch (22.2 mm) thickness of stucco complying with Section 2510.
6. A minimum $^1/_4$-inch (6.4 mm) thickness of fiber-cement lap, panel or shingle siding complying with Sections 1405.16 and 1405.16.1 or 1405.16.2.

2603.6 Roofing. Foam plastic insulation meeting the requirements of Sections 2603.2, 2603.3 and 2603.4 shall be permitted as part of a roof-covering assembly, provided the assembly with the foam plastic insulation is a Class A, B or C roofing assembly where tested in accordance with ASTM E 108 or UL 790.

2603.7 Foam plastic insulation used as interior finish or interior trim in plenums. Foam plastic insulation used as interior wall or ceiling finish or as interior trim in plenums shall exhibit a flame spread index of 75 or less and a smoke-developed index of 450 or less when tested in accordance with ASTM E 84 or UL 723 and shall comply with one or more of Sections 2603.7.1, 2603.7.2 and 2607.3.

2603.7.1 Separation required. The foam plastic insulation shall be separated from the plenum by a thermal barrier complying with Section 2603.4 and shall exhibit a flame spread index of 75 or less and a smoke-developed index of 450 or less when tested in accordance with ASTM E 84 or UL 723 at the thickness and density intended for use.

2603.7.2 Approval. The foam plastic insulation shall exhibit a flame spread index of 25 or less and a smoke-developed index of 50 or less when tested in accordance with ASTM E 84 or UL 723 at the thickness and density intended for use and shall meet the acceptance criteria of Section 803.1.2 when tested in accordance with NFPA 286. The foam plastic insulation shall be approved based on tests conducted in accordance with Section 2603.9.

2603.7.3 Covering. The foam plastic insulation shall be covered by corrosion-resistant steel having a base metal thickness of not less than 0.0160 inch (0.4 mm) and shall exhibit a flame spread index of 75 or less and a smoke-developed index of 450 or less when tested in accordance with ASTM E 84 or UL 723 at the thickness and density intended for use.

2603.8 Protection against termites. In areas where the probability of termite infestation is very heavy in accordance with Figure 2603.8, extruded and expanded polystyrene, polyisocyanurate and other foam plastics shall not be installed on the exterior face or under interior or exterior foundation walls or slab foundations located below grade. The clearance between foam plastics installed above grade and exposed earth shall be not less than 6 inches (152 mm).

Exceptions:

1. Buildings where the structural members of walls, floors, ceilings and roofs are entirely of noncombustible materials or preservative-treated wood.

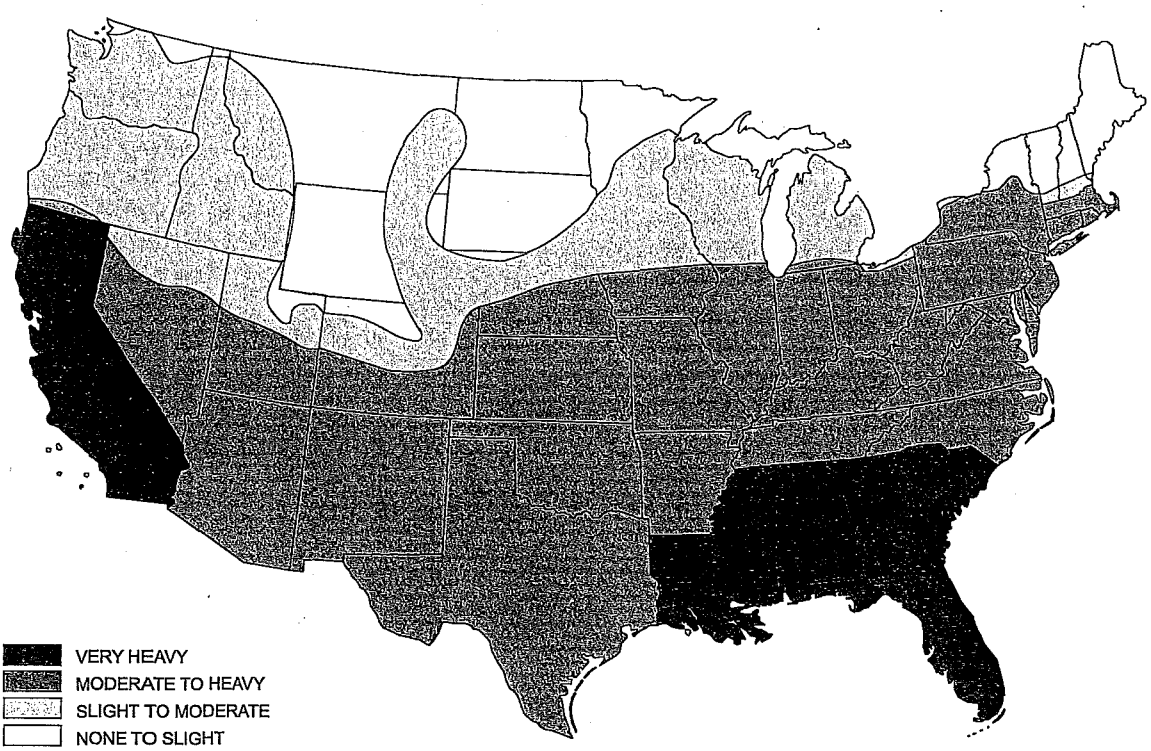

FIGURE 2603.8
TERMITE INFESTATION PROBABILITY MAP

2. An approved method of protecting the foam plastic and structure from subterranean termite damage is provided.
3. On the interior side of basement walls.

2603.9 Special approval. Foam plastic shall not be required to comply with the requirements of Section 2603.4 or those of Section 2603.6 where specifically approved based on large-scale tests such as, but not limited to, NFPA 286 (with the acceptance criteria of Section 803.2), FM 4880, UL 1040 or UL 1715. Such testing shall be related to the actual end-use configuration and be performed on the finished manufactured foam plastic assembly in the maximum thickness intended for use. Foam plastics that are used as interior finish on the basis of special tests shall also conform to the flame spread and smoke-developed requirements of Chapter 8. Assemblies tested shall include seams, joints and other typical details used in the installation of the assembly and shall be tested in the manner intended for use.

2603.10 Wind resistance. Foam plastic insulation complying with ASTM C 578 and ASTM C 1289 and used as exterior wall sheathing on framed wall assemblies shall comply with ANSI/FS 100 for wind pressure resistance.

2603.11 Cladding attachment over foam sheathing to masonry or concrete wall construction. Cladding shall be specified and installed in accordance with Chapter 14 and the cladding manufacturer's installation instructions or an approved design. Foam sheathing shall be attached to masonry or concrete construction in accordance with the insulation manufacturer's installation instructions or an approved design. Furring and furring attachments through foam sheathing shall be designed to resist design loads determined in accordance with Chapter 16, including support of cladding weight as applicable. Fasteners used to attach cladding or furring through foam sheathing to masonry or concrete substrates shall be approved for application into masonry or concrete material and shall be installed in accordance with the fastener manufacturer's installation instructions.

Exceptions:

1. Where the cladding manufacturer has provided approved installation instructions for application over foam sheathing and connection to a masonry or concrete substrate, those requirements shall apply.
2. For exterior insulation and finish systems, refer to Section 1408.
3. For anchored masonry or stone veneer installed over foam sheathing, refer to Section 1405.

2603.12 Cladding attachment over foam sheathing to cold-formed steel framing. Cladding shall be specified and installed in accordance with Chapter 14 and the cladding manufacturer's approved installation instructions, including any limitations for use over foam plastic sheathing, or an approved design. Where used, furring and furring attachments shall be designed to resist design loads determined in accordance with Chapter 16. In addition, the cladding or furring attachments through foam sheathing to framing shall meet or exceed the minimum fastening requirements of Sections 2603.12.1 and 2603.12.2, or an approved design for support of cladding weight.

Exceptions:

1. Where the cladding manufacturer has provided approved installation instructions for application over foam sheathing, those requirements shall apply.
2. For exterior insulation and finish systems, refer to Section 1408.

TABLE 2603.12.1
CLADDING MINIMUM FASTENING REQUIREMENTS FOR DIRECT ATTACHMENT OVER FOAM PLASTIC SHEATHING TO SUPPORT CLADDING WEIGHT[a]

CLADDING FASTENER THROUGH FOAM SHEATHING INTO:	CLADDING FASTENER TYPE AND MINIMUM SIZE[b]	CLADDING FASTENER VERTICAL SPACING (inches)	MAXIMUM THICKNESS OF FOAM SHEATHING[c] (inches)					
			16″o.c. fastener horizontal spacing			24″o.c. fastener horizontal spacing		
			Cladding weight			Cladding weight		
			3 psf	11 psf	25 psf	3 psf	11 psf	25 psf
Steel framing (minimum penetration of steel thickness plus 3 threads)	#8 screw into 33 mil steel or thicker	6	3	3	1.5	3	2	DR
		8	3	2	0.5	3	1.5	DR
		12	3	1.5	DR	3	0.75	DR
	#10 screw into 33 mil steel	6	4	3	2	4	3	0.5
		8	4	3	1	4	2	DR
		12	4	2	DR	3	1	DR
	#10 screw into 43 mil steel or thicker	6	4	4	3	4	4	2
		8	4	4	2	4	3	1.5
		12	4	3	1.5	4	3	DR

For SI: 1 inch = 25.4 mm; 1 pound per square foot (psf) = 0.0479 kPa, 1 pound per square inch = 0.00689 MPa.
DR = design required; o.c. = on center.
a. Steel framing shall be minimum 33 ksi steel for 33 mil and 43 mil steel and 50 ksi steel for 54 mil steel or thicker.
b. Screws shall comply with the requirements of AISI S200.
c. Foam sheathing shall have a minimum compressive strength of 15 pounds per square inch in accordance with ASTM C 578 or ASTM C 1289.

3. For anchored masonry or stone veneer installed over foam sheathing, refer to Section 1405.

2603.12.1 Direct attachment. Where cladding is installed directly over foam sheathing without the use of furring, cladding minimum fastening requirements to support the cladding weight shall be as specified in Table 2603.12.1.

2603.12.2 Furred cladding attachment. Where steel or wood furring is used to attach cladding over foam sheathing, furring minimum fastening requirements to support the cladding weight shall be as specified in Table 2603.12.2. Where placed horizontally, wood furring shall be preservative-treated wood in accordance with Section 2303.1.9 or naturally durable wood and fasteners shall be corrosion resistant in accordance Section 2304.10.5. Steel furring shall have a minimum G60 galvanized coating.

SECTION 2604
INTERIOR FINISH AND TRIM

2604.1 General. Plastic materials installed as interior finish or *trim* shall comply with Chapter 8. Foam plastics shall only be installed as interior finish where approved in accordance with the special provisions of Section 2603.9. Foam plastics that are used as interior finish shall also meet the flame spread and smoke-developed index requirements for interior finish in accordance with Chapter 8. Foam plastics installed as interior *trim* shall comply with Section 2604.2.

[F] 2604.2 Interior trim. Foam plastic used as interior *trim* shall comply with Sections 2604.2.1 through 2604.2.4.

[F] 2604.2.1 Density. The minimum density of the interior *trim* shall be 20 pcf (320 kg/m^3).

[F] 2604.2.2 Thickness. The maximum thickness of the interior *trim* shall be $^1/_2$ inch (12.7 mm) and the maximum width shall be 8 inches (204 mm).

[F] 2604.2.3 Area limitation. The interior *trim* shall not constitute more than 10 percent of the specific wall or ceiling areas to which it is attached.

[F] 2604.2.4 Flame spread. The flame spread index shall not exceed 75 where tested in accordance with ASTM E 84 or UL 723. The smoke-developed index shall not be limited.

Exception: When the interior *trim* material has been tested as an interior finish in accordance with NFPA 286 and complies with the acceptance criteria in Section 803.1.2.1, it shall not be required to be tested for flame spread index in accordance with ASTM E 84 or UL 723.

TABLE 2603.12.2
FURRING MINIMUM FASTENING REQUIREMENTS FOR APPLICATION OVER FOAM PLASTIC SHEATHING TO SUPPORT CLADDING WEIGHT[a]

FURRING MATERIAL	FRAMING MEMBER	FASTENER TYPE AND MINIMUM SIZE[b]	MINIMUM PENETRATION INTO WALL FRAMING (inches)	FASTENER SPACING IN FURRING (inches)	MAXIMUM THICKNESS OF FOAM SHEATHING[d] (inches)					
					16″ o.c. furring[e]			24″ o.c. furring[e]		
					Cladding weight			Cladding weight		
					3 psf	11 psf	25 psf	3 psf	11 psf	25 psf
Minimum 33 mil steel furring or minimum 1x wood furring[c]	33 mil steel stud	#8 screw	Steel thickness plus 3 threads	12	3	1.5	DR	3	0.5	DR
				16	3	1	DR	2	DR	DR
				24	2	DR	DR	2	DR	DR
		#10 screw	Steel thickness plus 3 threads	12	4	2	DR	4	1	DR
				16	4	1.5	DR	3	DR	DR
				24	3	DR	DR	2	DR	DR
	43 mil or thicker steel stud	#8 Screw	Steel thickness plus 3 threads	12	3	1.5	DR	3	0.5	DR
				16	3	1	DR	2	DR	DR
				24	2	DR	DR	2	DR	DR
		#10 screw	Steel thickness plus 3 threads	12	4	3	1.5	4	3	DR
				16	4	3	0.5	4	2	DR
				24	4	2	DR	4	0.5	DR

For SI: 1 inch = 25.4 mm; 1 pound per square foot (psf) = 0.0479 kPa, 1 pound per square inch = 0.00689 MPa.

DR = design required: o.c. = on center.

a. Wood furring shall be Spruce-Pine fir or any softwood species with a specific gravity of 0.42 or greater. Steel furring shall be minimum 33 ksi steel. Steel studs shall be minimum 33 ksi steel for 33 mil and 43 mil thickness and 50 ksi steel for 54 mil steel or thicker.

b. Screws shall comply with the requirements of AISI S200.

c. Where the required cladding fastener penetration into wood material exceeds $^3/_4$ inch and is not more than $1^1/_2$ inches, a minimum 2-inch nominal wood furring shall be used or an approved design.

d. Foam sheathing shall have a minimum compressive strength of 15 pounds per square inch in accordance with ASTM C 578 or ASTM C 1289.

e. Furring shall be spaced not more than 24 inches on center, in a vertical or horizontal orientation. In a vertical orientation, furring shall be located over wall studs and attached with the required fastener spacing. In a horizontal orientation, the indicated 8-inch and 12-inch fastener spacing in furring shall be achieved by use of two fasteners into studs at 16 inches and 24 inches on center, respectively.

SECTION 2605
PLASTIC VENEER

2605.1 Interior use. Where used within a building, plastic veneer shall comply with the interior finish requirements of Chapter 8.

2605.2 Exterior use. Exterior plastic veneer, other than plastic siding, shall be permitted to be installed on the *exterior walls* of buildings of any type of construction in accordance with all of the following requirements:

1. Plastic veneer shall comply with Section 2606.4.
2. Plastic veneer shall not be attached to any exterior wall to a height greater than 50 feet (15 240 mm) above grade.
3. Sections of plastic veneer shall not exceed 300 square feet (27.9 m^2) in area and shall be separated by not less than 4 feet (1219 mm) vertically.

Exception: The area and separation requirements and the smoke-density limitation are not applicable to plastic veneer applied to buildings constructed of Type VB construction, provided the walls are not required to have a fire-resistance rating.

2605.3 Plastic siding. Plastic siding shall comply with the requirements of Sections 1404 and 1405.

SECTION 2606
LIGHT-TRANSMITTING PLASTICS

2606.1 General. The provisions of this section and Sections 2607 through 2611 shall govern the quality and methods of application of light-transmitting plastics for use as light-transmitting materials in buildings and structures. Foam plastics shall comply with Section 2603. Light-transmitting plastic materials that meet the other code requirements for walls and roofs shall be permitted to be used in accordance with the other applicable chapters of the code.

2606.2 Approval for use. Sufficient technical data shall be submitted to substantiate the proposed use of any light-transmitting material, as approved by the *building official* and subject to the requirements of this section.

2606.3 Identification. Each unit or package of light-transmitting plastic shall be identified with a *mark* or decal satisfactory to the *building official*, which includes identification as to the material classification.

2606.4 Specifications. Light-transmitting plastics, including thermoplastic, thermosetting or reinforced thermosetting plastic material, shall have a self-ignition temperature of 650°F (343°C) or greater where tested in accordance with ASTM D 1929; a smoke-developed index not greater than 450 where tested in the manner intended for use in accordance with ASTM E 84 or UL 723, or a maximum average smoke density rating not greater than 75 where tested in the thickness intended for use in accordance with ASTM D 2843 and shall conform to one of the following combustibility classifications:

Class CC1: Plastic materials that have a burning extent of 1 inch (25 mm) or less where tested at a nominal thickness of 0.060 inch (1.5 mm), or in the thickness intended for use, in accordance with ASTM D 635.

Class CC2: Plastic materials that have a burning rate of $2^1/_2$ inches per minute (1.06 mm/s) or less where tested at a nominal thickness of 0.060 inch (1.5 mm), or in the thickness intended for use, in accordance with ASTM D 635.

2606.5 Structural requirements. Light-transmitting plastic materials in their assembly shall be of adequate strength and durability to withstand the loads indicated in Chapter 16. Technical data shall be submitted to establish stresses, maximum unsupported spans and such other information for the various thicknesses and forms used as deemed necessary by the *building official*.

2606.6 Fastening. Fastening shall be adequate to withstand the loads in Chapter 16. Proper allowance shall be made for expansion and contraction of light-transmitting plastic materials in accordance with accepted data on the coefficient of expansion of the material and other material in conjunction with which it is employed.

2606.7 Light-diffusing systems. Unless the building is equipped throughout with an *automatic sprinkler system* in accordance with Section 903.3.1.1, light-diffusing systems shall not be installed in the following occupancies and locations:

1. Group A with an *occupant load* of 1,000 or more.
2. Theaters with a stage and proscenium opening and an *occupant load* of 700 or more.
3. Group I-2.
4. Group I-3.
5. Interior exit stairways and ramps and *exit* passageways.

2606.7.1 Support. Light-transmitting plastic diffusers shall be supported directly or indirectly from ceiling or roof construction by use of noncombustible hangers. Hangers shall be not less than No. 12 steel-wire gage (0.106 inch) galvanized wire or equivalent.

2606.7.2 Installation. Light-transmitting plastic diffusers shall comply with Chapter 8 unless the light-transmitting plastic diffusers will fall from the mountings before igniting, at an ambient temperature of not less than 200°F (111°C) below the ignition temperature of the panels. The panels shall remain in place at an ambient room temperature of 175°F (79°C) for a period of not less than 15 minutes.

2606.7.3 Size limitations. Individual panels or units shall not exceed 10 feet (3048 mm) in length nor 30 square feet (2.79 m^2) in area.

2606.7.4 Fire suppression system. In buildings that are equipped throughout with an *automatic sprinkler system* in accordance with Section 903.3.1.1, plastic light-diffusing systems shall be protected both above and below unless the sprinkler system has been specifically approved for installation only above the light-diffusing system. Areas of light-diffusing systems that are protected in accordance with this section shall not be limited.

2606.7.5 Electrical luminaires. Light-transmitting plastic panels and light-diffuser panels that are installed in approved electrical luminaires shall comply with the requirements of Chapter 8 unless the light-transmitting plastic panels conform to the requirements of Section 2606.7.2. The area of approved light-transmitting plastic materials that is used in required *exits* or *corridors* shall not exceed 30 percent of the aggregate area of the ceiling in which such panels are installed, unless the building is equipped throughout with an *automatic sprinkler system* in accordance with Section 903.3.1.1.

2606.8 Partitions. Light-transmitting plastics used in or as partitions shall comply with the requirements of Chapters 6 and 8.

2606.9 Bathroom accessories. Light-transmitting plastics shall be permitted as glazing in shower stalls, shower doors, bathtub enclosures and similar accessory units. Safety glazing shall be provided in accordance with Chapter 24.

2606.10 Awnings, patio covers and similar structures. *Awnings* constructed of light-transmitting plastics shall be constructed in accordance with the provisions specified in Section 3105 and Chapter 32 for projections. Patio covers constructed of light-transmitting plastics shall comply with Section 2606. Light-transmitting plastics used in canopies at motor fuel-dispensing facilities shall comply with Section 2606, except as modified by Section 406.7.2.

2606.11 Greenhouses. Light-transmitting plastics shall be permitted in lieu of plain glass in greenhouses.

2606.12 Solar collectors. Light-transmitting plastic covers on solar collectors having noncombustible sides and bottoms shall be permitted on buildings not over three *stories above grade plane* or 9,000 square feet (836.1 m^2) in total floor area, provided the light-transmitting plastic cover does not exceed 33.33 percent of the roof area for CC1 materials or 25 percent of the roof area for CC2 materials.

Exception: Light-transmitting plastic covers having a thickness of 0.010 inch (0.3 mm) or less shall be permitted to be of any plastic material provided the area of the solar collectors does not exceed 33.33 percent of the roof area.

SECTION 2607
LIGHT-TRANSMITTING PLASTIC WALL PANELS

2607.1 General. Light-transmitting plastics shall not be used as wall panels in *exterior walls* in occupancies in Groups A-1, A-2, H, I-2 and I-3. In other groups, light-transmitting plastics shall be permitted to be used as wall panels in *exterior walls*, provided that the walls are not required to have a fire-resistance rating and the installation conforms to the requirements of this section. Such panels shall be erected and anchored on a foundation, waterproofed or otherwise protected from moisture absorption and sealed with a coat of mastic or other approved waterproof coating. Light-transmitting plastic wall panels shall comply with Section 2606.

2607.2 Installation. *Exterior wall* panels installed as provided for herein shall not alter the type of construction classification of the building.

2607.3 Height limitation. Light-transmitting plastics shall not be installed more than 75 feet (22 860 mm) above *grade plane*, except as allowed by Section 2607.5.

2607.4 Area limitation and separation. The maximum area of a single wall panel and minimum vertical and horizontal separation requirements for exterior light-transmitting plastic wall panels shall be as provided for in Table 2607.4. The maximum percentage of wall area of any *story* in light-transmitting plastic wall panels shall not exceed that indicated in Table 2607.4 or the percentage of unprotected openings permitted by Section 705.8, whichever is smaller.

Exceptions:

1. In structures provided with approved flame barriers extending 30 inches (760 mm) beyond the *exterior wall* in the plane of the floor, a vertical separation is not required at the floor except that provided by the vertical thickness of the flame barrier projection.
2. Veneers of approved weather-resistant light-transmitting plastics used as exterior siding in buildings of Type V construction in compliance with Section 1406.

TABLE 2607.4
AREA LIMITATION AND SEPARATION REQUIREMENTS FOR LIGHT-TRANSMITTING PLASTIC WALL PANELS[a]

FIRE SEPARATION DISTANCE (feet)	CLASS OF PLASTIC	MAXIMUM PERCENTAGE AREA OF EXTERIOR WALL IN PLASTIC WALL PANELS	MAXIMUM SINGLE AREA OF PLASTIC WALL PANELS (square feet)	MINIMUM SEPARATION OF PLASTIC WALL PANELS (feet)	
				Vertical	Horizontal
Less than 6	—	Not Permitted	Not Permitted	—	—
6 or more but less than 11	CC1	10	50	8	4
	CC2	Not Permitted	Not Permitted	—	—
11 or more but less than or equal to 30	CC1	25	90	6	4
	CC2	15	70	8	4
Over 30	CC1	50	Not Limited	3[b]	0
	CC2	50	100	6[b]	3

For SI: 1 foot = 304.8 mm, 1 square foot = 0.0929 m^2.

a. For combinations of plastic glazing and plastic wall panel areas permitted, see Section 2607.6.

b. For reductions in vertical separation allowed, see Section 2607.4.

3. The area of light-transmitting plastic wall panels in *exterior walls* of greenhouses shall be exempt from the area limitations of Table 2607.4 but shall be limited as required for unprotected openings in accordance with Section 704.8.

2607.5 Automatic sprinkler system. Where the building is equipped throughout with an *automatic sprinkler system* in accordance with Section 903.3.1.1, the maximum percentage area of *exterior wall* in any *story* in light-transmitting plastic wall panels and the maximum square footage of a single area given in Table 2607.4 shall be increased 100 percent, but the area of light-transmitting plastic wall panels shall not exceed 50 percent of the wall area in any story, or the area permitted by Section 705.8 for unprotected openings, whichever is smaller. These installations shall be exempt from height limitations.

2607.6 Combinations of glazing and wall panels. Combinations of light-transmitting plastic glazing and light-transmitting plastic wall panels shall be subject to the area, height and percentage limitations and the separation requirements applicable to the class of light-transmitting plastic as prescribed for light-transmitting plastic wall panel installations.

SECTION 2608
LIGHT-TRANSMITTING PLASTIC GLAZING

2608.1 Buildings of Type VB construction. Openings in the *exterior walls* of buildings of Type VB construction, where not required to be protected by Section 705, shall be permitted to be glazed or equipped with light-transmitting plastic. Light-transmitting plastic glazing shall comply with Section 2606.

2608.2 Buildings of other types of construction. Openings in the *exterior walls* of buildings of types of construction other than Type VB, where not required to be protected by Section 705, shall be permitted to be glazed or equipped with light-transmitting plastic in accordance with Section 2606 and all of the following:

1. The aggregate area of light-transmitting plastic glazing shall not exceed 25 percent of the area of any wall face of the *story* in which it is installed. The area of a single pane of glazing installed above the first *story above grade plane* shall not exceed 16 square feet (1.5 m^2) and the vertical dimension of a single pane shall not exceed 4 feet (1219 mm).

   Exception: Where an *automatic sprinkler system* is provided throughout in accordance with Section 903.3.1.1, the area of allowable glazing shall be increased to not more than 50 percent of the wall face of the *story* in which it is installed with no limit on the maximum dimension or area of a single pane of glazing.

2. Approved flame barriers extending 30 inches (762 mm) beyond the *exterior wall* in the plane of the floor, or vertical panels not less than 4 feet (1219 mm) in height, shall be installed between glazed units located in adjacent stories.

   Exception: Buildings equipped throughout with an *automatic sprinkler system* in accordance with Section 903.3.1.1.

3. Light-transmitting plastics shall not be installed more than 75 feet (22 860 mm) above grade level.

   Exception: Buildings equipped throughout with an *automatic sprinkler system* in accordance with Section 903.3.1.1.

SECTION 2609
LIGHT-TRANSMITTING PLASTIC ROOF PANELS

2609.1 General. Light-transmitting plastic roof panels shall comply with this section and Section 2606. Light-transmitting plastic roof panels shall not be installed in Groups H, I-2 and I-3. In all other groups, light-transmitting plastic roof panels shall comply with any one of the following conditions:

1. The building is equipped throughout with an *automatic sprinkler system* in accordance with Section 903.3.1.1.
2. The roof construction is not required to have a fire-resistance rating by Table 601.
3. The roof panels meet the requirements for roof coverings in accordance with Chapter 15.

2609.2 Separation. Individual roof panels shall be separated from each other by a distance of not less than 4 feet (1219 mm) measured in a horizontal plane.

Exceptions:

1. The separation between roof panels is not required in a building equipped throughout with an *automatic sprinkler system* in accordance with Section 903.3.1.1.
2. The separation between roof panels is not required in low-hazard occupancy buildings complying with the conditions of Section 2609.4, Exception 2 or 3.

2609.3 Location. Where *exterior wall* openings are required to be protected by Section 705.8, a roof panel shall not be installed within 6 feet (1829 mm) of such *exterior wall.*

2609.4 Area limitations. Roof panels shall be limited in area and the aggregate area of panels shall be limited by a percentage of the floor area of the room or space sheltered in accordance with Table 2609.4.

Exceptions:

1. The area limitations of Table 2609.4 shall be permitted to be increased by 100 percent in buildings equipped throughout with an *automatic sprinkler system* in accordance with Section 903.3.1.1.
2. Low-hazard occupancy buildings, such as swimming pool shelters, shall be exempt from the area limitations of Table 2609.4, provided that the buildings do not exceed 5,000 square feet (465 m^2) in

area and have a minimum fire separation distance of 10 feet (3048 mm).

3. Greenhouses that are occupied for growing plants on a production or research basis, without public access, shall be exempt from the area limitations of Table 2609.4 provided they have a minimum fire separation distance of 4 feet (1220 mm).
4. Roof coverings over terraces and patios in occupancies in Group R-3 shall be exempt from the area limitations of Table 2609.4 and shall be permitted with light-transmitting plastics.

TABLE 2609.4
AREA LIMITATIONS FOR LIGHT-TRANSMITTING PLASTIC ROOF PANELS

CLASS OF PLASTIC	MAXIMUM AREA OF INDIVIDUAL ROOF PANELS (square feet)	MAXIMUM AGGREGATE AREA OF ROOF PANELS (percent of floor area)
CC1	300	30
CC2	100	25

For SI: 1 square foot = 0.0929 m^2.

SECTION 2610
LIGHT-TRANSMITTING PLASTIC SKYLIGHT GLAZING

2610.1 Light-transmitting plastic glazing of skylight assemblies. Skylight assemblies glazed with light-transmitting plastic shall conform to the provisions of this section and Section 2606. Unit skylights glazed with light-transmitting plastic shall comply with Section 2405.5.

Exception: Skylights in which the light-transmitting plastic conforms to the required roof-covering class in accordance with Section 1505.

2610.2 Mounting. The light-transmitting plastic shall be mounted above the plane of the roof on a curb constructed in accordance with the requirements for the type of construction classification, but not less than 4 inches (102 mm) above the plane of the roof. Edges of the light-transmitting plastic skylights or domes shall be protected by metal or other approved noncombustible material, or the light transmitting plastic dome or skylight shall be shown to be able to resist ignition where exposed at the edge to a flame from a Class B brand as described in ASTM E 108 or UL 790. The Class B brand test shall be conducted on a skylight that is elevated to a height as specified in the manufacturer's installation instructions, but not less than 4 inches (102 mm).

Exceptions:

1. Curbs shall not be required for skylights used on roofs having a minimum slope of three units vertical in 12 units horizontal (25-percent slope) in occupancies in Group R-3 and on buildings with a nonclassified roof covering.
2. The metal or noncombustible edge material is not required where nonclassified roof coverings are permitted.

2610.3 Slope. Flat or corrugated light-transmitting plastic skylights shall slope not less than four units vertical in 12 units horizontal (4:12). Dome-shaped skylights shall rise above the mounting flange a minimum distance equal to 10 percent of the maximum width of the dome but not less than 3 inches (76 mm).

Exception: Skylights that pass the Class B Burning Brand Test specified in ASTM E 108 or UL 790.

2610.4 Maximum area of skylights. Each skylight shall have a maximum area within the curb of 100 square feet (9.3 m^2).

Exception: The area limitation shall not apply where the building is equipped throughout with an *automatic sprinkler system* in accordance with Section 903.3.1.1 or the building is equipped with smoke and heat vents in accordance with Section 910.

2610.5 Aggregate area of skylights. The aggregate area of skylights shall not exceed $33^1/_3$ percent of the floor area of the room or space sheltered by the roof in which such skylights are installed where Class CC1 materials are utilized, and 25 percent where Class CC2 materials are utilized.

Exception: The aggregate area limitations of light-transmitting plastic skylights shall be increased 100 percent beyond the limitations set forth in this section where the building is equipped throughout with an *automatic sprinkler system* in accordance with Section 903.3.1.1 or the building is equipped with smoke and heat vents in accordance with Section 910.

2610.6 Separation. Skylights shall be separated from each other by a distance of not less than 4 feet (1219 mm) measured in a horizontal plane.

Exceptions:

1. Buildings equipped throughout with an *automatic sprinkler system* in accordance with Section 903.3.1.1.
2. In Group R-3, multiple skylights located above the same room or space with a combined area not exceeding the limits set forth in Section 2610.4.

2610.7 Location. Where *exterior wall* openings are required to be protected in accordance with Section 705, a skylight shall not be installed within 6 feet (1829 mm) of such *exterior wall.*

2610.8 Combinations of roof panels and skylights. Combinations of light-transmitting plastic roof panels and skylights shall be subject to the area and percentage limitations and separation requirements applicable to roof panel installations.

SECTION 2611
LIGHT-TRANSMITTING PLASTIC INTERIOR SIGNS

2611.1 General. Light-transmitting plastic interior wall signs shall be limited as specified in Sections 2611.2 through 2611.4. Light-transmitting plastic interior wall signs in *covered and open mall buildings* shall comply with Section 402.6.4. Light-transmitting plastic interior signs shall also comply with Section 2606.

2611.2 Aggregate area. The sign shall not exceed 20 percent of the wall area.

2611.3 Maximum area. The sign shall not exceed 24 square feet (2.23 m^2).

2611.4 Encasement. Edges and backs of the sign shall be fully encased in metal.

SECTION 2612
PLASTIC COMPOSITES

2612.1 General. Plastic composites shall consist of either wood/plastic composites or plastic lumber. Plastic composites shall comply with the provisions of this code and with the additional requirements of Section 2612.

2612.2 Labeling and identification. Packages and containers of plastic composites used in exterior applications shall bear a *label* showing the manufacturer's name, product identification and information sufficient to determine that the end use will comply with code requirements.

2612.2.1 Performance levels. The label for plastic composites used in exterior applications as deck boards, stair treads, handrails and guards shall indicate the required performance levels and demonstrate compliance with the provisions of ASTM D 7032.

2612.2.2 Loading. The label for plastic composites used in exterior applications as deck boards, stair treads, handrails and guards shall indicate the type and magnitude of the load determined in accordance with ASTM D 7032.

2612.3 Flame spread index. Plastic composites shall exhibit a flame spread index not exceeding 200 when tested in accordance with ASTM E 84 or UL 723 with the test specimen remaining in place during the test.

Exception: Materials determined to be noncombustible in accordance with Section 703.5.

2612.4 Termite and decay resistance. Plastic composites containing wood, cellulosic or any other biodegradable materials shall be termite and decay resistant as determined in accordance with ASTM D 7032.

2612.5 Construction requirements. Plastic composites shall be permitted to be used as exterior deck boards, stair treads, handrails and guards in buildings of Type VB construction.

2612.5.1 Span rating. Plastic composites used as exterior deck boards shall have a span rating determined in accordance with ASTM D 7032.

2612.6 Plastic composite decking, handrails and guards. Plastic composite decking, handrails and guards shall be installed in accordance with this code and the manufacturer's instructions.

SECTION 2613
FIBER-REINFORCED POLYMER

2613.1 General. The provisions of this section shall govern the requirements and uses of fiber-reinforced polymer in and on buildings and structures.

2613.2 Labeling and identification. Packages and containers of fiber-reinforced polymer and their components delivered to the job site shall bear the *label* of an *approved agency* showing the manufacturer's name, product listing, product identification and information sufficient to determine that the end use will comply with the code requirements.

2613.3 Interior finishes. Fiber-reinforced polymer used as *interior finishes, decorative materials or trim* shall comply with Chapter 8.

2613.3.1 Foam plastic cores. Fiber-reinforced polymer used as interior finish and which contains foam plastic cores shall comply with Chapter 8 and this chapter.

2613.4 Light-transmitting materials. Fiber-reinforced polymer used as light-transmitting materials shall comply with Sections 2606 through 2611 as required for the specific application.

2613.5 Exterior use. Fiber-reinforced polymer shall be permitted to be installed on the *exterior walls* of buildings of any type of construction when such polymers meet the requirements of Section 2603.5. Fireblocking shall be installed in accordance with Section 718.

Exceptions:

1. Compliance with Section 2603.5 is not required when all of the following conditions are met:
   - 1.1. The fiber-reinforced polymer shall not exceed an aggregate total of 20 percent of the area of the specific wall to which it is attached, and no single architectural element shall exceed 10 percent of the area of the specific wall to which it is attached, and no contiguous set of architectural elements shall exceed 10 percent of the area of the specific wall to which they are attached.
   - 1.2. The fiber-reinforced polymer shall have a flame spread index of 25 or less. The flame spread index requirement shall not be required for coatings or paints having a thickness of less than 0.036 inch (0.9 mm) that are applied directly to the surface of the fiber-reinforced polymer.
   - 1.3. Fireblocking complying with Section 718.2.6 shall be installed.
   - 1.4. The fiber-reinforced polymer shall be installed directly to a noncombustible substrate or be separated from the exterior wall by one of the following materials: corrosion-resistant steel having a minimum base metal thickness of 0.016 inch (0.41 mm) at any point, aluminum having a minimum thickness of 0.019 inch (0.5 mm) or other approved noncombustible material.
2. Compliance with Section 2603.5 is not required when the fiber-reinforced polymer is installed on buildings that are 40 feet (12 190 mm) or less above grade when all of the following conditions are met:
   - 2.1. The fiber-reinforced polymer shall meet the requirements of Section 1406.2.
   - 2.2. Where the fire separation distance is 5 feet (1524 mm) or less, the area of the fiber-rein-

forced polymer shall not exceed 10 percent of the wall area. Where the fire separation distance is greater than 5 feet (1524 mm), there shall be no limit on the area of the *exterior wall* coverage using fiber-reinforced polymer.

2.3. The fiber-reinforced polymer shall have a flame spread index of 200 or less. The flame spread index requirements do not apply to coatings or paints having a thickness of less than 0.036 inch (0.9 mm) that are applied directly to the surface of the fiber-reinforced polymer.

2.4. Fireblocking complying with Section 718.2.6 shall be installed.

SECTION 2614
REFLECTIVE PLASTIC CORE INSULATION

2614.1 General. The provisions of this section shall govern the requirements and uses of reflective plastic core insulation in buildings and structures. Reflective plastic core insulation shall comply with the requirements of Section 2614 and of one of the following: Section 2614.3 or 2614.4.

2614.2 Identification. Packages and containers of reflective plastic core insulation delivered to the job site shall show the manufacturer's or supplier's name, product identification and information sufficient to determine that the end use will comply with the code requirements.

2614.3 Surface-burning characteristics. Reflective plastic core insulation shall have a flame spread index of not more than 25 and a smoke-developed index of not more than 450 when tested in accordance with ASTM E 84 or UL 723. The reflective plastic core insulation shall be tested at the maximum thickness intended for use. Test specimen preparation and mounting shall be in accordance with ASTM E 2599.

2614.4 Room corner test heat release. Reflective plastic core insulation shall comply with the acceptance criteria of Section 803.1.2.1 when tested in accordance with NFPA 286 or UL 1715 in the manner intended for use and at the maximum thickness intended for use.

CHAPTER 27

ELECTRICAL

SECTION 2701
GENERAL

2701.1 Scope. This chapter governs the electrical components, equipment and systems used in buildings and structures covered by this code. Electrical components, equipment and systems shall be designed and constructed in accordance with the provisions of NFPA 70.

SECTION 2702
EMERGENCY AND STANDBY POWER SYSTEMS

[F] 2702.1 Installation. Emergency power systems and standby power systems shall comply with Sections 2702.1.1 through 2702.1.7.

[F] 2702.1.1 Stationary generators. Stationary emergency and standby power generators required by this code shall be listed in accordance with UL 2200.

[F] 2702.1.2 Electrical. Emergency power systems and standby power systems required by this code or the *International Fire Code* shall be installed in accordance with the *International Fire Code*, NFPA 70, NFPA 110 and NFPA 111.

[F] 2702.1.3 Load transfer. Emergency power systems shall automatically provide secondary power within 10 seconds after primary power is lost, unless specified otherwise in this code. Standby power systems shall automatically provide secondary power within 60 seconds after primary power is lost, unless specified otherwise in this code.

[F] 2702.1.4 Load duration. Emergency power systems and standby power systems shall be designed to provide the required power for a minimum duration of 2 hours without being refueled or recharged, unless specified otherwise in this code.

[F] 2702.1.5 Uninterruptable power source. An uninterrupted source of power shall be provided for equipment when required by the manufacturer's instructions, the listing, this code or applicable referenced standards.

[F] 2702.1.6 Interchangeability. Emergency power systems shall be an acceptable alternative for installations that require standby power systems.

[F] 2702.1.7 Group I-2 occupancies. In Group I-2 occupancies, in new construction or where the building is substantially damaged, where an essential electrical system is located in flood hazard areas established in Section 1612.3, the system shall be located and installed in accordance with ASCE 24.

[F] 2702.2 Where required. Emergency and standby power systems shall be provided where required by Sections 2702.2.1 through 2702.2.16.

[F] 2702.2.1 Emergency alarm systems. Emergency power shall be provided for emergency alarm systems as required by Section 415.5.

[F] 2702.2.2 Elevators and platform lifts. Standby power shall be provided for elevators and platform lifts as required in Sections 1009.4, 1009.5, 3003.1, 3007.8 and 3008.8.

[F] 2702.2.3 Emergency responder radio coverage systems. Standby power shall be provided for emergency responder radio coverage systems required in Section 915 and the *International Fire Code*. The standby power supply shall be capable of operating the emergency responder radio coverage system for a duration of not less than 24 hours.

[F] 2702.2.4 Emergency voice/alarm communication systems. Emergency power shall be provided for emergency voice/alarm communication systems as required in Section 907.5.2.2.5. The system shall be capable of powering the required load for a duration of not less than 24 hours, as required in NFPA 72.

[F] 2702.2.5 Exit signs. Emergency power shall be provided for exit signs as required in Section 1013.6.3. The system shall be capable of powering the required load for a duration of not less than 90 minutes.

[F] 2702.2.6 Group I-2 occupancies. Essential electrical systems for Group I-2 occupancies shall be in accordance with Section 407.10.

[F] 2702.2.7 Group I-3 occupancies. Emergency power shall be provided for power-operated doors and locks in Group I-3 occupancies as required in Section 408.4.2.

[F] 2702.2.8 Hazardous materials. Emergency or standby power shall be provided in occupancies with hazardous materials where required by the *International Fire Code*.

[F] 2702.2.9 High-rise buildings. Emergency and standby power shall be provided in high-rise buildings as required in Sections 403.4.8.

[F] 2702.2.10 Horizontal sliding doors. Standby power shall be provided for horizontal sliding doors as required in Section 1010.1.4.3. The standby power supply shall have a capacity to operate not fewer than 50 closing cycles of the door.

[F] 2702.2.11 Means of egress illumination. Emergency power shall be provided for means of egress illumination as required in Section 1008.3. The system shall be capable of powering the required load for a duration of not less than 90 minutes.

[F] 2702.2.12 Membrane structures. Standby power shall be provided for auxiliary inflation systems in perma-

nent membrane structures as required in Section 3102.8.2. Standby power shall be provided for a duration of not less than 4 hours. Auxiliary inflation systems in temporary air-supported and air-inflated membrane structures shall be provided in accordance with Section 3103.10.4 of the *International Fire Code.*

[F] 2702.2.13 Pyrophoric materials. Emergency power shall be provided for occupancies with silane gas in accordance with the *International Fire Code.*

[F] 2702.2.14 Semiconductor fabrication facilities. Emergency power shall be provided for semiconductor fabrication facilities as required in Section 415.11.10.

[F] 2702.2.15 Smoke control systems. Standby power shall be provided for smoke control systems as required in Sections 404.7, 909.11, 909.20.6.2 and 909.21.5.

[F] 2702.2.16 Underground buildings. Emergency and standby power shall be provided in underground buildings as required in Section 405.

[F] 2702.3 Critical circuits. Cables used for survivability of required critical circuits shall be listed in accordance with UL 2196. Electrical circuit protective systems shall be installed in accordance with their listing requirements.

[F] 2702.4 Maintenance. Emergency and standby power systems shall be maintained and tested in accordance with the *International Fire Code.*

CHAPTER 28

MECHANICAL SYSTEMS

SECTION 2801
GENERAL

[M] 2801.1 Scope. Mechanical appliances, equipment and systems shall be constructed, installed and maintained in accordance with the *International Mechanical Code* and the *International Fuel Gas Code*. Masonry chimneys, fireplaces and barbecues shall comply with the *International Mechanical Code* and Chapter 21 of this code.

CHAPTER 29

PLUMBING SYSTEMS

SECTION 2901
GENERAL

[P] 2901.1 Scope. The provisions of this chapter and the *International Plumbing Code* shall govern the erection, installation, *alteration*, repairs, relocation, replacement, addition to, use or maintenance of plumbing equipment and systems. Toilet and bathing rooms shall be constructed in accordance with Section 1210. Plumbing systems and equipment shall be constructed, installed and maintained in accordance with the *International Plumbing Code*. Private sewage disposal systems shall conform to the *International Private Sewage Disposal Code*.

SECTION 2902
MINIMUM PLUMBING FACILITIES

[P] 2902.1 Minimum number of fixtures. Plumbing fixtures shall be provided in the minimum number as shown in Table 2902.1 based on the actual use of the building or space. Uses not shown in Table 2902.1 shall be considered individually by the code official. The number of occupants shall be determined by this code.

[P] 2902.1.1 Fixture calculations. To determine the *occupant load* of each sex, the total *occupant load* shall be divided in half. To determine the required number of fixtures, the fixture ratio or ratios for each fixture type shall be applied to the *occupant load* of each sex in accordance with Table 2902.1. Fractional numbers resulting from applying the fixture ratios of Table 2902.1 shall be rounded up to the next whole number. For calculations involving multiple occupancies, such fractional numbers for each occupancy shall first be summed and then rounded up to the next whole number.

> **Exception:** The total *occupant load* shall not be required to be divided in half where *approved* statistical data indicate a distribution of the sexes of other than 50 percent of each sex.

[P] 2902.1.2 Family or assisted-use toilet and bath fixtures. Fixtures located within family or assisted-use toilet and bathing rooms required by Section 1109.2.1 are permitted to be included in the number of required fixtures for either the male or female occupants in assembly and mercantile occupancies.

[P] TABLE 2902.1
MINIMUM NUMBER OF REQUIRED PLUMBING FIXTURES[a]
(See Sections 2902.1.1 and 2902.2)

No.	CLASSIFICATION	OCCUPANCY	DESCRIPTION	WATER CLOSETS (URINALS SEE SECTION 419.2 OF THE *INTERNATIONAL PLUMBING CODE*)		LAVATORIES		BATHTUBS/ SHOWERS	DRINKING FOUNTAINS (SEE SECTION 410 OF THE *INTERNATIONAL PLUMBING CODE*)	OTHER
				Male	Female	Male	Female			
1	Assembly (continued)	A-1[d]	Theaters and other buildings for the performing arts and motion pictures	1 per 125	1 per 65	1 per 200		—	1 per 500	1 service sink
		A-2[d]	Nightclubs, bars, taverns, dance halls and buildings for similar purposes	1 per 40	1 per 40	1 per 75		—	1 per 500	1 service sink
			Restaurants, banquet halls and food courts	1 per 75	1 per 75	1 per 200		—	1 per 500	1 service sink
		A-3[d]	Auditoriums without permanent seating, art galleries, exhibition halls, museums, lecture halls, libraries, arcades and gymnasiums	1 per 125	1 per 65	1 per 200		—	1 per 500	1 service sink
			Passenger terminals and transportation facilities	1 per 500	1 per 500	1 per 750		—	1 per 1,000	1 service sink
			Places of worship and other religious services	1 per 150	1 per 75	1 per 200		—	1 per 1,000	1 service sink

(continued)

[P] TABLE 2902.1—(continued)
MINIMUM NUMBER OF REQUIRED PLUMBING FIXTURES[a]
(See Sections 2902.1.1 and 2902.2)

No.	CLASSIFICATION	OCCUPANCY	DESCRIPTION	WATER CLOSETS (URINALS SEE SECTION 419.2 OF THE *INTERNATIONAL PLUMBING CODE*)		LAVATORIES		BATHTUBS/ SHOWERS	DRINKING FOUNTAINS (SEE SECTION 410 OF THE *INTERNATIONAL PLUMBING CODE*)	OTHER
				Male	Female	Male	Female			
1	Assembly	A-4	Coliseums, arenas, skating rinks, pools and tennis courts for indoor sporting events and activities	1 per 75 for the first 1,500 and 1 per 120 for the remainder exceeding 1,500	1 per 40 for the first 1,520 and 1 per 60 for the remainder exceeding 1,520	1 per 200	1 per 150	—	1 per 1,000	1 service sink
		A-5	Stadiums, amusement parks, bleachers and grandstands for outdoor sporting events and activities	1 per 75 for the first 1,500 and 1 per 120 for the remainder exceeding 1,500	1 per 40 for the first 1,520 and 1 per 60 for the remainder exceeding 1,520	1 per 200	1 per 150	—	1 per 1,000	1 service sink
2	Business	B	Buildings for the transaction of business, professional services, other services involving merchandise, office buildings, banks, light industrial and similar uses	1 per 25 for the first 50 and 1 per 50 for the remainder exceeding 50		1 per 40 for the first 80 and 1 per 80 for the remainder exceeding 80		—	1 per 100	1 service sink[e]
3	Educational	E	Educational facilities	1 per 50		1 per 50		—	1 per 100	1 service sink
4	Factory and industrial	F-1 and F-2	Structures in which occupants are engaged in work fabricating, assembly or processing of products or materials	1 per 100		1 per 100		See Section 411 of the *International Plumbing Code*	1 per 400	1 service sink
5	Institutional	I-1	Residential care	1 per 10		1 per 10		1 per 8	1 per 100	1 service sink
		I-2	Hospitals, ambulatory nursing home care recipient[b]	1 per room[c]		1 per room[c]		1 per 15	1 per 100	1 service sink
			Employees, other than residential care[b]	1 per 25		1 per 35		—	1 per 100	—
			Visitors, other than residential care	1 per 75		1 per 100		—	1 per 500	—
		I-3	Prisons[b]	1 per cell		1 per cell		1 per 15	1 per 100	1 service sink
		I-3	Reformatories, detention centers and correctional centers[b]	1 per 15		1 per 15		1 per 15	1 per 100	1 service sink
			Employees[b]	1 per 25		1 per 35		—	1 per 100	—
		I-4	Adult day care and child day care	1 per 15		1 per 15		1	1 per 100	1 service sink

(continued)

[P] TABLE 2902.1—continued
MINIMUM NUMBER OF REQUIRED PLUMBING FIXTURES[a]
(See Sections 2902.1.1 and 2902.2)

No.	CLASSIFICATION	OCCUPANCY	DESCRIPTION	WATER CLOSETS (URINALS SEE SECTION 419.2 OF THE *INTERNATIONAL PLUMBING CODE*)		LAVATORIES		BATHTUBS OR SHOWERS	DRINKING FOUNTAINS (SEE SECTION 410 OF THE *INTERNATIONAL PLUMBING CODE*)	OTHER
				Male	Female	Male	Female			
6	Mercantile	M	Retail stores, service stations, shops, salesrooms, markets and shopping centers	1 per 500		1 per 750		—	1 per 1,000	1 service sink[e]
7	Residential	R-1	Hotels, motels, boarding houses (transient)	1 per sleeping unit		1 per sleeping unit		1 per sleeping unit	—	1 service sink
		R-2	Dormitories, fraternities, sororities and boarding houses (not transient)	1 per 10		1 per 10		1 per 8	1 per 100	1 service sink
		R-2	Apartment house	1 per dwelling unit		1 per dwelling unit		1 per dwelling unit	—	1 kitchen sink per dwelling unit; 1 automatic clothes washer connection per 20 dwelling units
		R-3	One- and two-family dwellings and lodging houses with five or fewer guest rooms	1 per dwelling unit		1 per 10		1 per dwelling unit	—	1 kitchen sink per dwelling unit; 1 automatic clothes washer connection per dwelling unit
		R-3	Congregate living facilities with 16 or fewer persons	1 per 10		1 per 10		1 per 8	1 per 100	1 service sink
		R-4	Congregate living facilities with 16 or fewer persons	1 per 10		1 per 10		1 per 8	1 per 100	1 service sink
8	Storage	S-1 S-2	Structures for the storage of goods, warehouses, storehouses and freight depots, low and moderate hazard	1 per 100		1 per 100		See Section 411 of the *International Plumbing Code*	1 per 1,000	1 service sink

a. The fixtures shown are based on one fixture being the minimum required for the number of persons indicated or any fraction of the number of persons indicated. The number of occupants shall be determined by this code.
b. Toilet facilities for employees shall be separate from facilities for inmates or care recipients.
c. A single-occupant toilet room with one water closet and one lavatory serving not more than two adjacent patient *sleeping units* shall be permitted, provided that each patient *sleeping unit* has direct access to the toilet room and provisions for privacy for the toilet room user are provided.
d. The occupant load for seasonal outdoor seating and entertainment areas shall be included when determining the minimum number of facilities required.
e. For business and mercantile occupancies with an occupant load of 15 or fewer, service sinks shall not be required.

[P] 2902.2 Separate facilities. Where plumbing fixtures are required, separate facilities shall be provided for each sex.

Exceptions:

1. Separate facilities shall not be required for *dwelling units* and *sleeping units*.
2. Separate facilities shall not be required in structures or tenant spaces with a total *occupant load*, including both employees and customers, of 15 or fewer.
3. Separate facilities shall not be required in mercantile occupancies in which the maximum occupant load is 100 or less.

[P] 2902.2.1 Family or assisted-use toilet facilities serving as separate facilities. Where a building or tenant space requires a separate toilet facility for each sex and each toilet facility is required to have only one water closet, two family or assisted-use toilet facilities shall be permitted to serve as the required separate facilities. Family or assisted-use toilet facilities shall not be required to be identified for exclusive use by either sex as required by Section 2902.4.

[P] 2902.3 Employee and public toilet facilities. Customers, patrons and visitors shall be provided with public toilet facilities in structures and tenant spaces intended for public utilization. The number of plumbing fixtures located within the required toilet facilities shall be provided in accordance with Section 2902.1 for all users. Employees shall be provided with toilet facilities in all occupancies. Employee toilet facilities shall be either separate or combined employee and public toilet facilities.

Exception: Public toilet facilities shall not be required in:

1. Open or enclosed parking garages where there are no parking attendants.
2. Structures and tenant spaces intended for quick transactions, including takeout, pickup and drop-off, having a public access area less than or equal to 300 square feet (28 m^2).

[P] 2902.3.1 Access. The route to the public toilet facilities required by Section 2902.3 shall not pass through kitchens, storage rooms or closets. Access to the required facilities shall be from within the building or from the exterior of the building. Routes shall comply with the accessibility requirements of this code. The public shall have access to the required toilet facilities at all times that the building is occupied.

[P] 2902.3.2 Location of toilet facilities in occupancies other than malls. In occupancies other than covered and open mall buildings, the required public and employee toilet facilities shall be located not more than one *story* above or below the space required to be provided with toilet facilities, and the path of travel to such facilities shall not exceed a distance of 500 feet (152 m).

Exception: The location and maximum distances of travel to required employee facilities in factory and industrial occupancies are permitted to exceed that required by this section, provided that the location and maximum distance of travel are *approved*.

[P] 2902.3.3 Location of toilet facilities in malls. In covered and open mall buildings, the required public and employee toilet facilities shall be located not more than one story above or below the space required to be provided with toilet facilities, and the path of travel to such facilities shall not exceed a distance of 300 feet (91 mm). In mall buildings, the required facilities shall be based on total square footage (m^2) within a covered mall building or within the perimeter line of an open mall building, and facilities shall be installed in each individual store or in a central toilet area located in accordance with this section. The maximum distance of travel to central toilet facilities in mall buildings shall be measured from the main entrance of any store or tenant space. In mall buildings, where employees' toilet facilities are not provided in the individual store, the maximum distance of travel shall be measured from the employees' work area of the store or tenant space.

[P] 2902.3.4 Pay facilities. Where pay facilities are installed, such facilities shall be in excess of the required minimum facilities. Required facilities shall be free of charge.

[P] 2902.3.5 Door locking. Where a toilet room is provided for the use of multiple occupants, the egress door for the room shall not be lockable from the inside of the room. This section does not apply to family or assisted-use toilet rooms.

[P] 2902.3.6 Prohibited toilet room location. Toilet rooms shall not open directly into a room used for the preparation of food for service to the public. **

[P] 2902.4 Signage. Required public facilities shall be provided with signs that designate the sex as required by Section 2902.2. Signs shall be readily visible and located near the entrance to each toilet facility. Signs for accessible toilet facilities shall comply with Section 1111.

[P] 2902.4.1 Directional signage. Directional signage indicating the route to the required public toilet facilities shall be posted in a lobby, corridor, aisle or similar space, such that the sign can be readily seen from the main entrance to the building or tenant space.

[P] 2902.5 Drinking fountain location. Drinking fountains shall not be required to be located in individual tenant spaces provided that public drinking fountains are located within a distance of travel of 500 feet (152 m) of the most remote location in the tenant space and not more than one story above or below the tenant space. Where the tenant space is in a covered or open mall, such distance shall not exceed 300 feet (91 440 mm). Drinking fountains shall be located on an accessible route.

[P] 2902.6 Small occupancies. Drinking fountains shall not be required for an occupant load of 15 or fewer.

CHAPTER 30

ELEVATORS AND CONVEYING SYSTEMS

User note: Code change proposals to sections preceded by the designation [F] will be considered by the International Fire Code Development Committee during the 2016 (Group B) Code Development Cycle. See explanation on page iv.

SECTION 3001
GENERAL

3001.1 Scope. This chapter governs the design, construction, installation, *alteration* and repair of elevators and conveying systems and their components.

3001.2 Referenced standards. Except as otherwise provided for in this code, the design, construction, installation, *alteration*, repair and maintenance of elevators and conveying systems and their components shall conform to ASME A17.1/CSA B44, ASME A17.7/CSA B44.7, ASME A90.1, ASME B20.1, ANSI MH29.1, ALI ALCTV and ASCE 24 for construction in flood hazard areas established in Section 1612.3.

3001.3 Accessibility. Passenger elevators required to be accessible or to serve as part of an *accessible means of egress* shall comply with Sections 1009 and 1109.7.

3001.4 Change in use. A change in use of an elevator from freight to passenger, passenger to freight, or from one freight class to another freight class shall comply with Section 8.7 of ASME A17.1/CSA B44.

SECTION 3002
HOISTWAY ENCLOSURES

3002.1 Hoistway enclosure protection. Elevator, dumbwaiter and other hoistway enclosures shall be *shaft enclosures* complying with Section 713.

3002.1.1 Opening protectives. Openings in hoistway enclosures shall be protected as required in Chapter 7.

Exception: The elevator car doors and the associated hoistway enclosure doors at the floor level designated for recall in accordance with Section 3003.2 shall be permitted to remain open during Phase I Emergency Recall Operation.

3002.1.2 Hardware. Hardware on opening protectives shall be of an *approved* type installed as tested, except that *approved* interlocks, mechanical locks and electric contacts, door and gate electric contacts and door-operating mechanisms shall be exempt from the fire test requirements.

3002.2 Number of elevator cars in a hoistway. Where four or more elevator cars serve all or the same portion of a building, the elevators shall be located in not fewer than two separate hoistways. Not more than four elevator cars shall be located in any single hoistway enclosure.

3002.3 Emergency signs. An *approved* pictorial sign of a standardized design shall be posted adjacent to each elevator call station on all floors instructing occupants to use the *exit stairways* and not to use the elevators in case of fire. The sign shall read: IN CASE OF FIRE, ELEVATORS ARE OUT OF SERVICE. USE EXIT STAIRS.

Exceptions:

1. The emergency sign shall not be required for elevators that are part of an *accessible means of egress* complying with Section 1009.4.
2. The emergency sign shall not be required for elevators that are used for occupant self-evacuation in accordance with Section 3008.

3002.4 Elevator car to accommodate ambulance stretcher. Where elevators are provided in buildings four or more *stories* above, or four or more *stories* below, *grade plane*, not fewer than one elevator shall be provided for fire department emergency access to all floors. The elevator car shall be of such a size and arrangement to accommodate an ambulance stretcher 24 inches by 84 inches (610 mm by 2134 mm) with not less than 5-inch (127 mm) radius corners, in the horizontal, open position and shall be identified by the international symbol for emergency medical services (star of life). The symbol shall be not less than 3 inches (76 mm) in height and shall be placed inside on both sides of the hoistway door frame.

3002.5 Emergency doors. Where an elevator is installed in a single blind hoistway or on the outside of a building, there shall be installed in the blind portion of the hoistway or blank face of the building, an emergency door in accordance with ASME A17.1/CSA B44.

3002.6 Prohibited doors. Doors, other than hoistway doors and the elevator car door, shall be prohibited at the point of access to an elevator car unless such doors are readily openable from the car side without a key, tool, special knowledge or effort.

3002.7 Common enclosure with stairway. Elevators shall not be in a common *shaft enclosure* with a *stairway*.

Exception: Elevators within *open parking garages need not be separated from stairway enclosures.*

3002.8 Glass in elevator enclosures. Glass in elevator enclosures shall comply with Section 2409.2. **

3002.9 Plumbing and mechanical systems. Plumbing and mechanical systems shall not be located in an elevator hoistway enclosure.

Exception: Floor drains, sumps and sump pumps shall be permitted at the base of the hoistway enclosure provided they are indirectly connected to the plumbing system.

SECTION 3003
EMERGENCY OPERATIONS

[F] 3003.1 Standby power. In buildings and structures where standby power is required or furnished to operate an elevator, the operation shall be in accordance with Sections 3003.1.1 through 3003.1.4.

[F] 3003.1.1 Manual transfer. Standby power shall be manually transferable to all elevators in each bank.

[F] 3003.1.2 One elevator. Where only one elevator is installed, the elevator shall automatically transfer to standby power within 60 seconds after failure of normal power.

[F] 3003.1.3 Two or more elevators. Where two or more elevators are controlled by a common operating system, all elevators shall automatically transfer to standby power within 60 seconds after failure of normal power where the standby power source is of sufficient capacity to operate all elevators at the same time. Where the standby power source is not of sufficient capacity to operate all elevators at the same time, all elevators shall transfer to standby power in sequence, return to the designated landing and disconnect from the standby power source. After all elevators have been returned to the designated level, at least one elevator shall remain operable from the standby power source.

[F] 3003.1.4 Venting. Where standby power is connected to elevators, the machine room *ventilation* or air conditioning shall be connected to the standby power source.

[F] 3003.2 Fire fighters' emergency operation. Elevators shall be provided with Phase I emergency recall operation and Phase II emergency in-car operation in accordance with ASME A17.1/CSA B44.

[F] 3003.3 Standardized fire service elevator keys. All elevators shall be equipped to operate with a standardized fire service elevator key in accordance with the *International Fire Code*.

➡ *

SECTION 3004
CONVEYING SYSTEMS

3004.1 General. Escalators, moving walks, conveyors, personnel hoists and material hoists shall comply with the provisions of Sections 3004.2 through 3004.4.

3004.2 Escalators and moving walks. Escalators and moving walks shall be constructed of *approved* noncombustible and fire-retardant materials. This requirement shall not apply to electrical equipment, wiring, wheels, handrails and the use of $^1/_{28}$-inch (0.9 mm) wood veneers on balustrades backed up with noncombustible materials.

3004.2.1 Enclosure. Escalator floor openings shall be enclosed with *shaft enclosures* complying with Section 713.

3004.2.2 Escalators. Where provided in below-grade transportation stations, escalators shall have a clear width of not less than 32 inches (815 mm).

Exception: The clear width is not required in existing facilities undergoing *alterations*.

3004.3 Conveyors. Conveyors and conveying systems shall comply with ASME B20.1.

3004.3.1 Enclosure. Conveyors and related equipment connecting successive floors or levels shall be enclosed with *shaft enclosures* complying with Section 713.

3004.3.2 Conveyor safeties. Power-operated conveyors, belts and other material-moving devices shall be equipped with automatic limit switches that will shut off the power in an emergency and automatically stop all operation of the device.

3004.4 Personnel and material hoists. Personnel and material hoists shall be designed utilizing an *approved* method that accounts for the conditions imposed during the intended operation of the hoist device. The design shall include, but is not limited to, anticipated loads, structural stability, impact, vibration, stresses and seismic restraint. The design shall account for the construction, installation, operation and inspection of the hoist tower, car, machinery and control equipment, guide members and hoisting mechanism. Additionally, the design of personnel hoists shall include provisions for field testing and maintenance that will demonstrate that the hoist device functions in accordance with the design. Field tests shall be conducted upon the completion of an installation or following a major *alteration* of a personnel hoist.

SECTION 3005
MACHINE ROOMS

3005.1 Access. An *approved* means of access shall be provided to elevator machine rooms, control rooms, control spaces and machinery spaces.

3005.2 Venting. Elevator machine rooms, machinery spaces that contain the driving machine, and control rooms or spaces that contain the operation or motion controller for elevator operation shall be provided with an independent *ventilation* or air-conditioning system to protect against the overheating of the electrical equipment. The system shall be capable of maintaining temperatures within the range established for the elevator equipment.

3005.3 Pressurization. The elevator machine room, control rooms or control space with openings into a pressurized elevator hoistway shall be pressurized upon activation of a *heat or smoke detector* located in the elevator machine room, control room or control space.

3005.4 Machine rooms, control rooms, machinery spaces, and control spaces. Elevator machine rooms, control rooms, control spaces and machinery spaces outside of but attached to a hoistway that have openings into the hoistway shall be

enclosed with *fire barriers* constructed in accordance with Section 707 or *horizontal assemblies* constructed in accordance with Section 711, or both. The *fire-resistance rating* shall be not less than the required rating of the hoistway enclosure served by the machinery. Openings in the *fire barriers* shall be protected with assemblies having a *fire protection rating* not less than that required for the hoistway enclosure doors.

Exceptions:

1. For other than fire service access elevators and occupant evacuation elevators, where machine rooms, machinery spaces, control rooms and control spaces do not abut and have no openings to the hoistway enclosure they serve, the *fire barriers* constructed in accordance with Section 707 or *horizontal assemblies* constructed in accordance with Section 711, or both, shall be permitted to be reduced to a 1-hour *fire-resistance rating*.
2. For other than fire service access elevators and occupant evacuation elevators, in buildings four *stories* or less above *grade plane* where machine room, machinery spaces, control rooms and control spaces do not abut and have no openings to the hoistway enclosure they serve, the machine room, machinery spaces, control rooms and control spaces are not required to be fire-resistance rated.

3005.5 Shunt trip. Where elevator hoistways, elevator machine rooms, control rooms and control spaces containing elevator control equipment are protected with automatic sprinklers, a means installed in accordance with Section 21.4 of NFPA 72 shall be provided to disconnect automatically the main line power supply to the affected elevator prior to the application of water. This means shall not be self-resetting. The activation of automatic sprinklers outside the hoistway, machine room, machinery space, control room or control space shall not disconnect the main line power supply.

3005.6 Plumbing systems. Plumbing systems shall not be located in elevator equipment rooms.

**

SECTION 3006
ELEVATOR LOBBIES AND HOISTWAY OPENING PROTECTION

3006.1 General. Elevator hoistway openings and enclosed elevator lobbies shall be provided in accordance with the following:

1. Where hoistway opening protection is required by Section 3006.2, such protection shall be in accordance with Section 3006.3.
2. Where enclosed elevator lobbies are required for underground buildings, such lobbies shall comply with Section 405.4.3.
3. Where an area of refuge is required and an enclosed elevator lobby is provided to serve as an area of refuge, the enclosed elevator lobby shall comply with Section 1009.6.
4. Where fire service access elevators are provided, enclosed elevator lobbies shall comply with Section 3007.6.
5. Where occupant evacuation elevators are provided, enclosed elevator lobbies shall comply with Section 3008.6.

3006.2 Hoistway opening protection required. Elevator hoistway door openings shall be protected in accordance with Section 3006.3 where an elevator hoistway connects more than three stories, is required to be enclosed within a shaft enclosure in accordance with Section 712.1.1 and any of the following conditions apply:

1. The building is not protected throughout with an *automatic sprinkler system* in accordance with Section 903.3.1.1 or 903.3.1.2.
2. The building contains a Group I-1 Condition 2 occupancy.
3. The building contains a Group I-2 occupancy.
4. The building contains a Group I-3 occupancy.
5. The building is a high rise and the elevator hoistway is more than 75 feet (22 860 mm) in height. The height of the hoistway shall be measured from the lowest floor to the highest floor of the floors served by the hoistway.

Exceptions:

1. Protection of elevator hoistway door openings is not required where the elevator serves only open parking garages in accordance with Section 406.5.
2. Protection of elevator hoistway door openings is not required at the level(s) of exit discharge, provided the level(s) of exit discharge is equipped with an *automatic sprinkler system* in accordance with Section 903.3.1.1.
3. Enclosed elevator lobbies and protection of elevator hoistway door openings are not required on levels where the elevator hoistway opens to the exterior.

3006.3 Hoistway opening protection. Where Section 3006.2 requires protection of the elevator hoistway door opening, the protection shall be provided by one of the following:

1. An enclosed elevator lobby shall be provided at each floor to separate the elevator hoistway shaft enclosure doors from each floor by fire partitions in accordance with Section 708. In addition, doors protecting openings in the elevator lobby enclosure walls shall comply with Section 716.5.3 as required for corridor walls. Penetrations of the enclosed elevator lobby by ducts and air transfer openings shall be protected as required for corridors in accordance with Section 717.5.4.1.
2. An enclosed elevator lobby shall be provided at each floor to separate the elevator hoistway shaft enclosure doors from each floor by smoke partitions in accordance with Section 710 where the building is equipped throughout with an *automatic sprinkler system* installed in accordance with Section 903.3.1.1 or 903.3.1.2. In addition, doors protecting openings in the smoke partitions shall comply with Sections 710.5.2.2, 710.5.2.3

and 716.5.9. Penetrations of the enclosed elevator lobby by ducts and air transfer openings shall be protected as required for corridors in accordance with Section 717.5.4.1.

3. Additional doors shall be provided at each elevator hoistway door opening in accordance with Section 3002.6. Such door shall comply with the smoke and draft control door assembly requirements in Section 716.5.3.1 when tested in accordance with UL 1784 without an artificial bottom seal.
4. The elevator hoistway shall be pressurized in accordance with Section 909.21.

3006.4 Means of egress. Elevator lobbies shall be provided with at least one means of egress complying with Chapter 10 and other provisions in this code. Egress through an elevator lobby shall be permitted in accordance with Item 1 of Section 1016.2.

SECTION 3007
FIRE SERVICE ACCESS ELEVATOR

3007.1 General. Where required by Section 403.6.1, every floor of the building shall be served by fire service access elevators complying with Sections 3007.1 through 3007.9. Except as modified in this section, fire service access elevators shall be installed in accordance with this chapter and ASME A17.1/CSA B44.

3007.2 Automatic sprinkler system. The building shall be equipped throughout with an *automatic sprinkler system* in accordance with Section 903.3.1.1, except as otherwise permitted by Section 903.3.1.1.1 and as prohibited by Section 3007.2.1.

3007.2.1 Prohibited locations. Automatic sprinklers shall not be installed in machine rooms, elevator machinery spaces, control rooms, control spaces and elevator hoistways of fire service access elevators.

3007.2.2 Sprinkler system monitoring. The sprinkler system shall have a sprinkler control valve supervisory switch and water-flow-initiating device provided for each floor that is monitored by the building's *fire alarm system.*

3007.3 Water protection. An *approved* method to prevent water from infiltrating into the hoistway enclosure from the operation of the *automatic sprinkler system* outside the enclosed fire service access elevator lobby shall be provided.

3007.4 Shunt trip. Means for elevator shutdown in accordance with Section 3005.5 shall not be installed on elevator systems used for fire service access elevators.

3007.5 Hoistway enclosures. The fire service access elevator hoistway shall be located in a *shaft enclosure* complying with Section 713.

3007.5.1 Structural integrity of hoistway enclosures. The fire service access elevator hoistway enclosure shall comply with Sections 403.2.3.1 through 403.2.3.4.

3007.5.2 Hoistway lighting. When fire-fighters' emergency operation is active, the entire height of the hoistway shall be illuminated at not less than 1 footcandle (11 lux) as measured from the top of the car of each fire service access elevator.

3007.6 Fire service access elevator lobby. The fire service access elevator shall open into a fire service access elevator lobby in accordance with Sections 3007.6.1 through 3007.6.5. Egress is permitted through the elevator lobby in accordance with Item 1 of Section 1016.2.

Exception: Where a fire service access elevator has two entrances onto a floor, the second entrance shall be permitted to open into an elevator lobby in accordance with Section 3006.3.

3007.6.1 Access to interior exit stairway or ramp. The fire service access elevator lobby shall have direct access from the enclosed elevator lobby to an enclosure for an *interior exit stairway* or *ramp*.

Exception: Access to an *interior exit stairway* or *ramp* shall be permitted to be through a protected path of travel that has a level of fire protection not less than the elevator lobby enclosure. The protected path shall be separated from the enclosed elevator lobby through an opening protected by a smoke and draft control assembly in accordance Section 716.5.3.

3007.6.2 Lobby enclosure. The fire service access elevator lobby shall be enclosed with a *smoke barrier* having a *fire-resistance rating* of not less than 1 hour, except that lobby doorways shall comply with Section 3007.6.3.

Exception: Enclosed fire service access elevator lobbies are not required at the *levels of exit discharge.*

3007.6.3 Lobby doorways. Other than doors to the hoistway, elevator control room or elevator control space, each doorway to a fire service access elevator lobby shall be provided with a $^3/_4$-hour *fire door assembly* complying with Section 716.5. The *fire door assembly* shall comply with the smoke and draft control door assembly requirements of Section 716.5.3.1 with the UL 1784 test conducted without the artificial bottom seal.

3007.6.4 Lobby size. Regardless of the number of fire service access elevators served by the same elevator lobby, the enclosed fire service access elevator lobby shall be not less than 150 square feet (14 m^2) in an area with a dimension of not less than 8 feet (2440 mm).

3007.6.5 Fire service access elevator symbol. A pictorial symbol of a standardized design designating which elevators are fire service access elevators shall be installed on each side of the hoistway door frame on the portion of the frame at right angles to the fire service access elevator lobby. The fire service access elevator symbol shall be designed as shown in Figure 3007.6.5 and shall comply with the following:

1. The fire service access elevator symbol shall be not less than 3 inches (76 mm) in height.
2. The helmet shall contrast with the background, with either a light helmet on a dark background or a dark helmet on a light background.
3. The vertical center line of the fire service access elevator symbol shall be centered on the hoistway door

frame. Each symbol shall be not less than 78 inches (1981 mm), and not more than 84 inches (2134 mm) above the finished floor at the threshold.

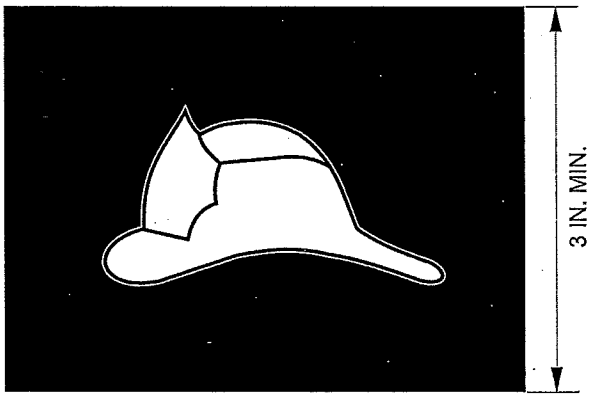

For SI: 1 inch = 25.4 mm.

FIGURE 3007.6.5
FIRE SERVICE ACCESS ELEVATOR SYMBOL

3007.7 Elevator system monitoring. The fire service access elevator shall be continuously monitored at the *fire command center* by a standard emergency service interface system meeting the requirements of NFPA 72.

3007.8 Electrical power. The following features serving each fire service access elevator shall be supplied by both normal power and Type 60/Class 2/Level 1 standby power:

1. Elevator equipment.
2. Elevator hoistway lighting.
3. *Ventilation* and cooling equipment for elevator machine rooms, control rooms, machine spaces and control spaces.
4. Elevator car lighting.

3007.8.1 Protection of wiring or cables. Wires or cables that are located outside of the elevator hoistway and machine room and that provide normal or standby power, control signals, communication with the car, lighting, heating, air conditioning, *ventilation* and fire-detecting systems to fire service access elevators shall be protected by construction having a *fire-resistance rating* of not less than 2 hours, shall be a circuit integrity cable having a *fire-resistance rating* of not less than 2 hours or shall be protected by a listed electrical protective system having a *fire-resistance rating* of not less than 2 hours.

Exception: Wiring and cables to control signals are not required to be protected provided that wiring and cables do not serve Phase II emergency in-car operations.

3007.9 Standpipe hose connection. A Class I standpipe hose connection in accordance with Section 905 shall be provided in the *interior exit stairway* and *ramp* having direct access from the fire service access elevator lobby.

3007.9.1 Access. The *exit* enclosure containing the standpipe shall have access to the floor without passing through the fire service access elevator lobby.

SECTION 3008
OCCUPANT EVACUATION ELEVATORS

3008.1 General. Where elevators are to be used for occupant self-evacuation during fires, all passenger elevators for general public use shall comply with Sections 3008.1 through 3008.10. Where other elevators are used for occupant self-evacuation, those elevators shall comply with these sections.

3008.1.1 Additional exit stairway. Where an additional *means of egress* is required in accordance with Section 403.5.2, an additional *exit stairway* shall not be required to be installed in buildings provided with occupant evacuation elevators complying with Section 3008.1.

3008.1.2 Fire safety and evacuation plan. The building shall have an *approved* fire safety and evacuation plan in accordance with the applicable requirements of Section 404 of the *International Fire Code*. The fire safety and evacuation plan shall incorporate specific procedures for the occupants using evacuation elevators.

3008.1.3 Operation. The occupant evacuation elevators shall be used for occupant self-evacuation in accordance with the occupant evacuation operation requirements in ASME A17.1/CSA B44 and the building's fire safety and evacuation plan.

3008.2 Automatic sprinkler system. The building shall be equipped throughout with an *approved*, electrically supervised *automatic sprinkler system* in accordance with Section 903.3.1.1, except as otherwise permitted by Section 903.3.1.1.1 and as prohibited by Section 3008.2.1.

3008.2.1 Prohibited locations. Automatic sprinklers shall not be installed in elevator machine rooms, machinery spaces, control rooms, control spaces and elevator hoistways of occupant evacuation elevators.

3008.2.2 Sprinkler system monitoring. The automatic sprinkler system shall have a sprinkler control valve supervisory switch and water-flow-initiating device provided for each floor that is monitored by the building's *fire alarm system*.

3008.3 Water protection. An *approved* method to prevent water from infiltrating into the hoistway enclosure from the operation of the *automatic sprinkler system* outside the enclosed occupant evacuation elevator lobby shall be provided.

3008.4 Shunt trip. Means for elevator shutdown in accordance with Section 3005.5 shall not be installed on elevator systems used for occupant evacuation elevators.

3008.5 Hoistway enclosure protection. Occupant evacuation elevator hoistways shall be located in *shaft enclosures* complying with Section 713.

3008.5.1 Structural integrity of hoistway enclosures. Occupant evacuation elevator hoistway enclosures shall comply with Sections 403.2.3.1 through 403.2.3.4.

3008.6 Occupant evacuation elevator lobby. Occupant evacuation elevators shall open into an elevator lobby in accordance with Sections 3008.6.1 through 3008.6.6. Egress is permitted through the elevator lobby in accordance with Item 1 of Section 1016.2.

3008.6.1 Access to interior exit stairway or ramp. The occupant evacuation elevator lobby shall have direct access from the enclosed elevator lobby to an *interior exit stairway* or *ramp*.

Exception: Access to an *interior exit stairway* or *ramp* shall be permitted to be through a protected path of travel that has a level of fire protection not less than the elevator lobby enclosure. The protected path shall be separated from the enclosed elevator lobby through an opening protected by a smoke and draft control assembly in accordance Section 716.5.3.

3008.6.2 Lobby enclosure. The occupant evacuation elevator lobby shall be enclosed with a *smoke barrier* having a *fire-resistance rating* of not less than 1 hour, except that lobby doorways shall comply with Section 3008.6.3.

Exception: Enclosed occupant evacuation elevator lobbies are not required at the *levels of exit discharge*.

3008.6.3 Lobby doorways. Other than the doors to the hoistway, elevator machine rooms, machinery spaces, control rooms and control spaces within the lobby enclosure smoke barrier, each doorway to an occupant evacuation elevator lobby shall be provided with a $^3/_4$-hour *fire door assembly* complying with Section 716.5. The *fire door assembly* shall comply with the smoke and draft control assembly requirements of Section 716.5.3.1 with the UL 1784 test conducted without the artificial bottom seal.

3008.6.3.1 Vision panel. A vision panel shall be installed in each *fire door assembly* protecting the lobby doorway. The vision panel shall consist of fire-protection-rated glazing and shall be located to furnish clear vision of the occupant evacuation elevator lobby.

3008.6.3.2 Door closing. Each *fire door assembly* protecting the lobby doorway shall be automatic-closing upon receipt of any fire alarm signal from the *emergency voice/alarm communication system* serving the building.

3008.6.4 Lobby size. Each occupant evacuation elevator lobby shall have minimum floor area as follows:

1. The occupant evacuation elevator lobby floor area shall accommodate, at 3 square feet (0.28 m^2) per person, not less than 25 percent of the *occupant load* of the floor area served by the lobby.
2. The occupant evacuation elevator lobby floor area shall accommodate one *wheelchair space* of 30 inches by 48 inches (760 mm by 1220 mm) for each 50 persons, or portion thereof, of the *occupant load* of the floor area served by the lobby.

Exception: The size of lobbies serving multiple banks of elevators shall have the minimum floor area *approved* on an individual basis and shall be consistent with the building's fire safety and evacuation plan.

3008.6.5 Signage. An *approved* sign indicating elevators are suitable for occupant self-evacuation shall be posted on all floors adjacent to each elevator call station serving occupant evacuation elevators.

3008.6.6 Two-way communication system. A two-way communication system shall be provided in each occupant evacuation elevator lobby for the purpose of initiating communication with the *fire command center* or an alternate location *approved* by the fire department. The two-way communication system shall be designed and installed in accordance with Sections 1009.8.1 and 1009.8.2.

3008.7 Elevator system monitoring. The occupant evacuation elevators shall be continuously monitored at the *fire command center* or a central control point *approved* by the fire department and arranged to display all of the following information:

1. Floor location of each elevator car.
2. Direction of travel of each elevator car.
3. Status of each elevator car with respect to whether it is occupied.
4. Status of normal power to the elevator equipment, elevator machinery and electrical apparatus cooling equipment where provided, elevator machine room, control room and control space *ventilation* and cooling equipment.
5. Status of standby or emergency power system that provides backup power to the elevator equipment, elevator machinery and electrical cooling equipment where provided, elevator machine room, control room and control space *ventilation* and cooling equipment.
6. Activation of any fire alarm initiating device in any elevator lobby, elevator machine room, machine space containing a motor controller or electric driving machine, control space, control room or elevator hoistway.

3008.7.1 Elevator recall. The *fire command center* or an alternate location *approved* by the fire department shall be provided with the means to manually initiate a Phase I Emergency Recall of the occupant evacuation elevators in accordance with ASME A17.1/CSA B44.

3008.8 Electrical power. The following features serving each occupant evacuation elevator shall be supplied by both normal power and Type 60/Class 2/Level 1 standby power:

1. Elevator equipment.
2. *Ventilation* and cooling equipment for elevator machine rooms, control rooms, machinery spaces and control spaces.
3. Elevator car lighting.

3008.8.1 Protection of wiring or cables. Wires or cables that are located outside of the elevator hoistway, machine room, control room and control space and that provide normal or standby power, control signals, communication with the car, lighting, heating, air conditioning, *ventilation* and fire-detecting systems to fire service access elevators shall be protected by construction having a *fire-resistance rating* of not less than 2 hours, shall be circuit integrity cable having a fire-resistance rating of not less than 2

hours or shall be protected by a listed electrical circuit protective system having a *fire-resistance rating* of not less than 2 hours.

Exception: Wiring and cables to control signals are not required to be protected provided that wiring and cables do not serve Phase II emergency in-car operation.

3008.9 Emergency voice/alarm communication system. The building shall be provided with an *emergency voice/alarm communication system*. The *emergency voice/alarm communication system* shall be accessible to the fire department. The system shall be provided in accordance with Section 907.5.2.2.

3008.9.1 Notification appliances. Not fewer than one audible and one visible notification appliance shall be installed within each occupant evacuation elevator lobby.

3008.10 Hazardous material areas. No building areas shall contain hazardous materials exceeding the maximum allowable quantities per *control area* as addressed in Section 414.2.

CHAPTER 31

SPECIAL CONSTRUCTION

User note: Code change proposals to sections preceded by the designation [BS] will be considered by the IBC – Structural Code Development Committee during the 2016 (Group B) Code Development Cycle. See explanation on page iv.

SECTION 3101
GENERAL

3101.1 Scope. The provisions of this chapter shall govern special building construction including membrane structures, temporary structures, *pedestrian walkways* and tunnels, automatic *vehicular gates*, *awnings* and *canopies*, *marquees*, signs, and towers and antennas.

SECTION 3102
MEMBRANE STRUCTURES

3102.1 General. The provisions of Sections 3102.1 through 3102.8 shall apply to air-supported, air-inflated, membrane-covered cable, membrane-covered frame and *tensile membrane structures*, collectively known as membrane structures, erected for a period of 180 days or longer. Those erected for a shorter period of time shall comply with the *International Fire Code*. Membrane structures covering water storage facilities, water clarifiers, water treatment plants, sewage treatment plants, greenhouses and similar facilities not used for human occupancy are required to meet only the requirements of Sections 3102.3.1 and 3102.7. Membrane structures erected on a building, balcony, deck or other structure for any period of time shall comply with this section.

3102.1.1 Tensile membrane structures. Tensile membrane structures, including permanent and temporary structures, shall be designed and constructed in accordance with ASCE 55. The provisions in Sections 3102.3 through 3102.6 shall apply.

3102.2 Definitions. The following terms are defined in Chapter 2:

AIR-INFLATED STRUCTURE.

AIR-SUPPORTED STRUCTURE.

Double skin.

Single skin.

CABLE-RESTRAINED, AIR-SUPPORTED STRUCTURE.

MEMBRANE-COVERED CABLE STRUCTURE.

MEMBRANE-COVERED FRAME STRUCTURE.

NONCOMBUSTIBLE MEMBRANE STRUCTURE.

TENSILE MEMBRANE STRUCTURE.

3102.3 Type of construction. Noncombustible membrane structures shall be classified as Type IIB construction. Noncombustible frame or cable-supported structures covered by an approved membrane in accordance with Section 3102.3.1 shall be classified as Type IIB construction. Heavy timber frame-supported structures covered by an *approved* membrane in accordance with Section 3102.3.1 shall be classified as Type IV construction. Other membrane structures shall be classified as Type V construction.

Exception: Plastic less than 30 feet (9144 mm) above any floor used in greenhouses, where occupancy by the general public is not authorized, and for aquaculture pond covers is not required to meet the fire propagation performance criteria of Test Method 1 or Test Method 2, as appropriate, of NFPA 701.

3102.3.1 Membrane and interior liner material. Membranes and interior liners shall be either noncombustible as set forth in Section 703.5 or meet the fire propagation performance criteria of Test Method 1 or Test Method 2, as appropriate, of NFPA 701 and the manufacturer's test protocol.

Exception: Plastic less than 20 mil (0.5 mm) in thickness used in greenhouses, where occupancy by the general public is not authorized, and for aquaculture pond covers is not required to meet the fire propagation performance criteria of Test Method 1 or Test Method 2, as appropriate, of NFPA 701.

3102.4 Allowable floor areas. The area of a membrane structure shall not exceed the limitations specified in Section 506.

3102.5 Maximum height. Membrane structures shall not exceed one story nor shall such structures exceed the height limitations in feet specified in Section 504.3.

Exception: Noncombustible membrane structures serving as roofs only.

3102.6 Mixed construction. Membrane structures shall be permitted to be utilized as specified in this section as a portion of buildings of other types of construction. Height and area limits shall be as specified for the type of construction and occupancy of the building.

3102.6.1 Noncombustible membrane. A noncombustible membrane shall be permitted for use as the roof or as a skylight of any building or atrium of a building of any type of construction provided the membrane is not less than 20 feet (6096 mm) above any floor, balcony or gallery.

3102.6.1.1 Membrane. A membrane meeting the fire propagation performance criteria of Test Method 1 or Test Method 2, as appropriate, of NFPA 701 shall be permitted to be used as the roof or as a skylight on buildings of Type IIB, III, IV and V construction, provided the membrane is not less than 20 feet (6096 mm) above any floor, balcony or gallery.

3102.7 Engineering design. The structure shall be designed and constructed to sustain dead loads; loads due to tension or inflation; live loads including wind, snow or flood and seismic loads and in accordance with Chapter 16.

3102.7.1 Lateral restraint. For membrane-covered frame structures, the membrane shall not be considered to provide lateral restraint in the calculation of the capacities of the frame members.

3102.8 Inflation systems. Air-supported and air-inflated structures shall be provided with primary and auxiliary inflation systems to meet the minimum requirements of Sections 3102.8.1 through 3102.8.3.

3102.8.1 Equipment requirements. This inflation system shall consist of one or more blowers and shall include provisions for automatic control to maintain the required inflation pressures. The system shall be so designed as to prevent overpressurization of the system.

3102.8.1.1 Auxiliary inflation system. In addition to the primary inflation system, in buildings larger than 1,500 square feet (140 m^2) in area, an auxiliary inflation system shall be provided with sufficient capacity to maintain the inflation of the structure in case of primary system failure. The auxiliary inflation system shall operate automatically when there is a loss of internal pressure and when the primary blower system becomes inoperative.

3102.8.1.2 Blower equipment. Blower equipment shall meet all of the following requirements:

1. Blowers shall be powered by continuous-rated motors at the maximum power required for any flow condition as required by the structural design.
2. Blowers shall be provided with inlet screens, belt guards and other protective devices as required by the *building official* to provide protection from injury.
3. Blowers shall be housed within a weather-protecting structure.
4. Blowers shall be equipped with backdraft check dampers to minimize air loss when inoperative.
5. Blower inlets shall be located to provide protection from air contamination. The location of inlets shall be *approved*.

3102.8.2 Standby power. Wherever an auxiliary inflation system is required, an *approved* standby power-generating system shall be provided. The system shall be equipped with a suitable means for automatically starting the generator set upon failure of the normal electrical service and for automatic transfer and operation of all of the required electrical functions at full power within 60 seconds of such service failure. Standby power shall be capable of operating independently for not less than 4 hours.

3102.8.3 Support provisions. A system capable of supporting the membrane in the event of deflation shall be provided for in air-supported and air-inflated structures having an *occupant load* of 50 or more or where covering a swimming pool regardless of *occupant load*. The support system shall be capable of maintaining membrane structures used as a roof for Type I construction not less than 20 feet (6096 mm) above floor or seating areas. The support system shall be capable of maintaining other membranes not less than 7 feet (2134 mm) above the floor, seating area or surface of the water.

SECTION 3103
TEMPORARY STRUCTURES

3103.1 General. The provisions of Sections 3103.1 through 3103.4 shall apply to structures erected for a period of less than 180 days. Tents and other membrane structures erected for a period of less than 180 days shall comply with the *International Fire Code*. Those erected for a longer period of time shall comply with applicable sections of this code.

3103.1.1 Conformance. Temporary structures and uses shall conform to the structural strength, fire safety, *means of egress*, accessibility, light, ventilation and sanitary requirements of this code as necessary to ensure public health, safety and general welfare.

3103.1.2 Permit required. Temporary structures that cover an area greater than 120 square feet (11.16 m^2), including connecting areas or spaces with a common *means of egress* or entrance that are used or intended to be used for the gathering together of 10 or more persons, shall not be erected, operated or maintained for any purpose without obtaining a *permit* from the *building official*.

3103.2 Construction documents. A *permit* application and *construction documents* shall be submitted for each installation of a temporary structure. The *construction documents* shall include a site plan indicating the location of the temporary structure and information delineating the *means of egress* and the *occupant load*.

3103.3 Location. Temporary structures shall be located in accordance with the requirements of Table 602 based on the *fire-resistance rating* of the *exterior walls* for the proposed type of construction.

3103.4 Means of egress. Temporary structures shall conform to the *means of egress* requirements of Chapter 10 and shall have an *exit access* travel distance of 100 feet (30 480 mm) or less.

SECTION 3104
PEDESTRIAN WALKWAYS AND TUNNELS

3104.1 General. This section shall apply to connections between buildings such as *pedestrian walkways* or tunnels, located at, above or below grade level, that are used as a means of travel by persons. The *pedestrian walkway* shall not contribute to the *building area* or the number of *stories* or height of connected buildings.

3104.1.1 Application. Pedestrian walkways shall be designed and constructed in accordance with Sections 3104.2 through 3104.9. Tunnels shall be designed and constructed in accordance with Sections 3104.2 and 3104.10.

3104.2 Separate structures. Buildings connected by *pedestrian walkways* or tunnels shall be considered to be separate structures.

Exceptions:

1. Buildings that are on the same lot and considered as portions of a single building in accordance with Section 503.1.2.
2. For purposes of calculating the number of Type B units required by Chapter 11, structurally connected buildings and buildings with multiple wings shall be considered one structure.

3104.3 Construction. The *pedestrian walkway* shall be of noncombustible construction.

Exceptions:

1. Combustible construction shall be permitted where connected buildings are of combustible construction.
2. *Fire-retardant-treated wood*, in accordance with Section 603.1, Item 1.3, shall be permitted for the roof construction of the *pedestrian walkway* where connected buildings are a minimum of Type I or II construction.

3104.4 Contents. Only materials and decorations *approved* by the *building official* shall be located in the *pedestrian walkway*.

3104.5 Connections of pedestrian walkways to buildings. The connection of a *pedestrian walkway* to a building shall comply with Section 3104.5.1, 3104.5.2, 3104.5.3 or 3104.5.4.

Exception: Buildings that are on the same lot and considered as portions of a single building in accordance with Section 503.1.2.

3104.5.1 Fire barriers. *Pedestrian walkways* shall be separated from the interior of the building by not less than 2-hour *fire barriers* constructed in accordance with Section 707 and Sections 3104.5.1.1 through 3104.5.1.3.

3104.5.1.1 Exterior walls. Exterior walls of buildings connected to *pedestrian walkways* shall be 2-hour fire-resistance rated. This protection shall extend not less than 10 feet (3048 mm) in every direction surrounding the perimeter of the pedestrian walkway.

3104.5.1.2 Openings in exterior walls of connected buildings. Openings in exterior walls required to be fire-resistance rated in accordance with Section 3104.5.1.1 shall be equipped with opening protectives providing a not less than $^3/_4$-hour *fire protection rating* in accordance with Section 716.

3104.5.1.3 Supporting construction. The fire barrier shall be supported by construction as required by Section 707.5.1.

3104.5.2 Alternative separation. The wall separating the *pedestrian walkway* and the building shall comply with Section 3104.5.2.1 or 3104.5.2.2 where:

1. The distance between the connected buildings is more than 10 feet (3048 mm).
2. The *pedestrian walkway* and connected buildings are equipped throughout with an *automatic sprinkler system* in accordance with Section 903.3.1.1, and the roof of the walkway is not more than 55 feet (16 764 mm) above grade connecting to the fifth, or lower, story above grade plane, of each building.

   Exception: Open parking garages need not be equipped with an automatic sprinkler system.

3104.5.2.1 Passage of smoke. The wall shall be capable of resisting the passage of smoke.

3104.5.2.2 Glass. The wall shall be constructed of a tempered, wired or laminated glass wall and doors or glass separating the interior of the building from the *pedestrian walkway*. The glass shall be protected by an *automatic sprinkler system* in accordance with Section 903.3.1.1 that, when actuated, shall completely wet the entire surface of interior sides of the wall or glass. Obstructions shall not be installed between the sprinkler heads and the wall or glass. The glass shall be in a gasketed frame and installed in such a manner that the framing system will deflect without breaking (loading) the glass before the sprinkler operates.

3104.5.3 Open sides on walkway. Where the distance between the connected buildings is more than 10 feet (3048 mm), the walls at the intersection of the *pedestrian walkway* and each building need not be fire-resistance rated provided both sidewalls of the pedestrian walkway are not less than 50 percent open with the open area uniformly distributed to prevent the accumulation of smoke and *toxic* gases. The roof of the walkway shall be located not more than 40 feet (12 160 mm) above grade plane, and the walkway shall only be permitted to connect to the third or lower story of each building.

Exception: Where the *pedestrian walkway* is protected with a sprinkler system in accordance with Section 903.3.1.1, the roof of the walkway shall be located not more than 55 feet (16 764 mm) above grade plane and the walkway shall only be permitted to connect to the fifth or lower story of each building.

3104.5.4 Exterior walls greater than 2 hours. Where *exterior walls* of connected buildings are required by Section 705 to have a *fire-resistance rating* greater than 2 hours, the walls at the intersection of the pedestrian walkway and each building need not be fire-resistance rated provided:

1. The *pedestrian walkway* is equipped throughout with an *automatic sprinkler system* installed in accordance with Section 903.3.1.1.
2. The roof of the walkway is not located more than 55 feet (16 764 mm) above grade plane and the walkway connects to the fifth, or lower, story above grade plane of each building.

3104.6 Public way. *Pedestrian walkways* over a *public way* shall comply with Chapter 32.

3104.7 Egress. Access shall be provided at all times to a *pedestrian walkway* that serves as a required *exit*.

3104.8 Width. The unobstructed width of *pedestrian walkways* shall be not less than 36 inches (914 mm). The total width shall be not greater than 30 feet (9144 mm).

3104.9 Exit access travel. The length of *exit access* travel shall be 200 feet (60 960 mm) or less.

Exceptions:

1. *Exit access* travel distance on a *pedestrian walkway* equipped throughout with an *automatic sprinkler system* in accordance with Section 903.3.1.1 shall be 250 feet (76 200 mm) or less.
2. *Exit access* travel distance on a *pedestrian walkway* constructed with both sides not less than 50 percent open shall be 300 feet (91 440 mm) or less.
3. *Exit access* travel distance on a *pedestrian walkway* constructed with both sides not less than 50 percent open, and equipped throughout with an *automatic sprinkler system* in accordance with Section 903.3.1.1, shall be 400 feet (122 m) or less.

3104.10 Tunneled walkway. Separation between the tunneled walkway and the building to which it is connected shall be not less than 2-hour fire-resistant construction and openings therein shall be protected in accordance with Table 716.5.

SECTION 3105
AWNINGS AND CANOPIES

3105.1 General. *Awnings* and *canopies* shall comply with the requirements of Sections 3105.2 through 3105.4 and other applicable sections of this code.

3105.2 Definition. The following term is defined in Chapter 2:

RETRACTABLE AWNING.

3105.3 Design and construction. *Awnings* and *canopies* shall be designed and constructed to withstand wind or other lateral loads and live loads as required by Chapter 16 with due allowance for shape, open construction and similar features that relieve the pressures or loads. Structural members shall be protected to prevent deterioration. *Awnings* shall have frames of noncombustible material, *fire-retardant-treated wood*, wood of Type IV size, or 1-hour construction with combustible or noncombustible covers and shall be either fixed, retractable, folding or collapsible.

3105.4 Awnings and canopy materials. Awnings and *canopies* shall be provided with an *approved* covering that meets the fire propagation performance criteria of Test Method 1 or Test Method 2, as appropriate, of NFPA 701 or has a *flame spread index* not greater than 25 when tested in accordance with ASTM E 84 or UL 723.

Exception: The fire propagation performance and flame spread index requirements shall not apply to awnings installed on detached one- and two-family dwellings.

SECTION 3106
MARQUEES

3106.1 General. Marquees shall comply with Sections 3106.2 through 3106.5 and other applicable sections of this code.

3106.2 Thickness. The height or thickness of a marquee measured vertically from its lowest to its highest point shall be not greater than 3 feet (914 mm) where the marquee projects more than two-thirds of the distance from the *lot line* to the curb line, and shall be not greater than 9 feet (2743 mm) where the marquee is less than two-thirds of the distance from the lot line to the curb line.

3106.3 Roof construction. Where the roof or any part thereof is a skylight, the skylight shall comply with the requirements of Chapter 24. Every roof and skylight of a marquee shall be sloped to downspouts that shall conduct any drainage from the marquee in such a manner so as not to spill over the sidewalk.

3106.4 Location prohibited. Every marquee shall be so located as not to interfere with the operation of any exterior standpipe, and such that the marquee does not obstruct the clear passage of *stairways* or *exit discharge* from the building or the installation or maintenance of street lighting.

3106.5 Construction. A marquee shall be supported entirely from the building and constructed of noncombustible materials. Marquees shall be designed as required in Chapter 16. Structural members shall be protected to prevent deterioration.

SECTION 3107
SIGNS

3107.1 General. Signs shall be designed, constructed and maintained in accordance with this code.

SECTION 3108
TELECOMMUNICATION AND BROADCAST TOWERS

[BS] 3108.1 General. Towers shall be designed and constructed in accordance with the provisions of TIA-222. Towers shall be designed for seismic loads; exceptions related to seismic design listed in Section 2.7.3 of TIA-222 shall not apply. In Section 2.6.6.2 of TIA 222, the horizontal extent of Topographic Category 2, escarpments, shall be 16 times the height of the escarpment.

Exception: Single free-standing poles used to support antennas not greater than 75 feet (22 860 mm), measured from the top of the pole to grade, shall not be required to be noncombustible.

[BS] 3108.2 Location and access. Towers shall be located such that guy wires and other accessories shall not cross or encroach upon any street or other public space, or over

above-ground electric utility lines, or encroach upon any privately owned property without the written consent of the owner of the encroached-upon property, space or above-ground electric utility lines. Towers shall be equipped with climbing and working facilities in compliance with TIA-222. Access to the tower sites shall be limited as required by applicable OSHA, FCC and EPA regulations.

SECTION 3109
SWIMMING POOL ENCLOSURES AND SAFETY DEVICES

3109.1 General. Swimming pools shall comply with the requirements of Sections 3109.2 through 3109.5 and other applicable sections of this code.

3109.2 Definition. The following term is defined in Chapter 2:

SWIMMING POOLS.

3109.3 Public swimming pools. Public swimming pools shall be completely enclosed by a fence not less than 4 feet (1290 mm) in height or a screen enclosure. Openings in the fence shall not *permit* the passage of a 4-inch-diameter (102 mm) sphere. The fence or screen

enclosure shall be equipped with self-closing and self-latching gates.

3109.4 Residential swimming pools. Residential swimming pools shall be completely enclosed by a barrier complying with Sections 3109.4.1 through 3109.4.3.

Exception: A swimming pool with a power safety cover or a spa with a safety cover complying with ASTM F 1346 need not comply with this section.

3109.4.1 Barrier height and clearances. The top of the barrier shall be not less than 48 inches (1219 mm) above grade measured on the side of the barrier that faces away from the swimming pool. The vertical clearance between grade and the bottom of the barrier shall be not greater than 2 inches (51 mm) measured on the side of the barrier that faces away from the swimming pool. Where the top of the pool structure is above grade, the barrier is authorized to be at ground level or mounted on top of the pool structure, and the vertical clearance between the top of the pool structure and the bottom of the barrier shall be not greater than 4 inches (102 mm).

3109.4.1.1 Openings. Openings in the barrier shall not allow passage of a 4-inch-diameter (102 mm) sphere.

3109.4.1.2 Solid barrier surfaces. Solid barriers which do not have openings shall not contain indentations or protrusions except for normal construction tolerances and tooled masonry joints.

3109.4.1.3 Closely spaced horizontal members. Where the barrier is composed of horizontal and vertical members and the distance between the tops of the horizontal members is less than 45 inches (1143 mm), the horizontal members shall be located on the swimming pool side of the fence. Spacing between vertical members shall be not greater than $1^3/_4$ inches (44 mm) in width. Where there are decorative cutouts within vertical members, spacing within the cutouts shall be not greater than $1^3/_4$ inches (44 mm) in width.

3109.4.1.4 Widely spaced horizontal members. Where the barrier is composed of horizontal and vertical members and the distance between the tops of the horizontal members is 45 inches (1143 mm) or more, spacing between vertical members shall be not greater than 4 inches (102 mm). Where there are decorative cutouts within vertical members, spacing within the cutouts shall be not greater than $1^3/_4$ inches (44 mm) in width.

3109.4.1.5 Chain link dimensions. Mesh size for chain link fences shall be not greater than a $2^1/_4$-inch square (57 mm square) unless the fence is provided with slats fastened at the top or the bottom that reduce the openings to not more than $1^3/_4$ inches (44 mm).

3109.4.1.6 Diagonal members. Where the barrier is composed of diagonal members, the opening formed by the diagonal members shall be not greater than $1^3/_4$ inches (44 mm).

3109.4.1.7 Gates. Access doors or gates shall comply with the requirements of Sections 3109.4.1.1 through 3109.4.1.6 and shall be equipped to accommodate a locking device. Pedestrian access doors or gates shall open outward away from the pool and shall be self-closing and have a self-latching device. Doors or gates other than pedestrian access doors or gates shall have a self-latching device. Release mechanisms shall be in accordance with Sections 1010.1.9 and 1109.13. Where the release mechanism of the self-latching device is located less than 54 inches (1372 mm) from the bottom of the door or gate, the release mechanism shall be located on the pool side of the door or gate 3 inches (76 mm) or more, below the top of the door or gate, and the door or gate and barrier shall be without openings greater than $^1/_2$ inch (12.7 mm) within 18 inches (457 mm) of the release mechanism.

3109.4.1.8 Dwelling wall as a barrier. Where a wall of a *dwelling* serves as part of the barrier, one of the following shall apply:

1. Doors with direct access to the pool through that wall shall be equipped with an alarm that produces an audible warning when the door or its screen, if present, are opened. The alarm shall be *listed* and labeled in accordance with UL 2017. In dwellings not required to be *Accessible units*, *Type A units* or *Type B units*, the deactivation switch shall be located 54 inches (1372 mm) or more above the threshold of the door. In dwellings required to be *Accessible units*, *Type A units* or *Type B units*, the deactivation switch shall be located not higher than 54 inches (1372 mm) and not less than 48 inches (1219 mm) above the threshold of the door.
2. The pool shall be equipped with a power safety cover that complies with ASTM F 1346.

3. Other means of protection, such as self-closing doors with self-latching devices, which are *approved*, shall be accepted so long as the degree of protection afforded is not less than the protection afforded by Item 1 or 2 above.

3109.4.1.9 Pool structure as barrier. Where an above-ground pool structure is used as a barrier or where the barrier is mounted on top of the pool structure, and the means of access is a ladder or steps, then the ladder or steps either shall be capable of being secured, locked or removed to prevent access, or the ladder or steps shall be surrounded by a barrier that meets the requirements of Sections 3109.4.1.1 through 3109.4.1.8. Where the ladder or steps are secured, locked or removed, any opening created shall not allow the passage of a 4-inch-diameter (102 mm) sphere.

3109.4.2 Indoor swimming pools. Walls surrounding indoor swimming pools shall not be required to comply with Section 3109.4.1.8.

3109.4.3 Prohibited locations. Barriers shall be located so as to prohibit permanent structures, equipment or similar objects from being used to climb the barriers.

3109.5 Entrapment avoidance. Suction outlets shall be designed and installed in accordance with ANSI/APSP-7.

SECTION 3110
AUTOMATIC VEHICULAR GATES

3110.1 General. *Automatic vehicular gates* shall comply with the requirements of Sections 3110.2 through 3110.4 and other applicable sections of this code.

3110.2 Definition. The following term is defined in Chapter 2:

VEHICULAR GATE.

3110.3 Vehicular gates intended for automation. *Vehicular gates* intended for automation shall be designed, constructed and installed to comply with the requirements of ASTM F 2200.

3110.4 Vehicular gate openers. *Vehicular gate* openers, where provided, shall be *listed* in accordance with UL 325.

SECTION 3111
PHOTOVOLTAIC PANELS AND MODULES

3111.1 General. Photovoltaic panels and modules shall comply with the requirements of this code and the *International Fire Code*.

3111.1.1 Rooftop-mounted photovoltaic panels and modules. Photovoltaic panels and modules installed on a roof or as an integral part of a roof assembly shall comply with the requirements of Chapter 15 and the *International Fire Code*.

CHAPTER 32

ENCROACHMENTS INTO THE PUBLIC RIGHT-OF-WAY

SECTION 3201
GENERAL

3201.1 Scope. The provisions of this chapter shall govern the encroachment of structures into the public right-of-way.

3201.2 Measurement. The projection of any structure or portion thereof shall be the distance measured horizontally from the *lot line* to the outermost point of the projection.

3201.3 Other laws. The provisions of this chapter shall not be construed to permit the violation of other laws or ordinances regulating the use and occupancy of public property.

3201.4 Drainage. Drainage water collected from a roof, *awning*, canopy or marquee, and condensate from mechanical equipment shall not flow over a public walking surface.

SECTION 3202
ENCROACHMENTS

3202.1 Encroachments below grade. Encroachments below grade shall comply with Sections 3202.1.1 through 3202.1.3.

3202.1.1 Structural support. A part of a building erected below grade that is necessary for structural support of the building or structure shall not project beyond the *lot lines*, except that the footings of street walls or their supports that are located not less than 8 feet (2438 mm) below grade shall not project more than 12 inches (305 mm) beyond the street *lot line*.

3202.1.2 Vaults and other enclosed spaces. The construction and utilization of vaults and other enclosed spaces below grade shall be subject to the terms and conditions of the applicable governing authority.

3202.1.3 Areaways. Areaways shall be protected by grates, *guards* or other *approved* means.

3202.2 Encroachments above grade and below 8 feet in height. Encroachments into the public right-of-way above grade and below 8 feet (2438 mm) in height shall be prohibited except as provided for in Sections 3202.2.1 through 3202.2.3. Doors and windows shall not open or project into the public right-of-way.

3202.2.1 Steps. Steps shall not project more than 12 inches (305 mm) and shall be guarded by *approved* devices not less than 3 feet (914 mm) in height, or shall be located between columns or pilasters.

3202.2.2 Architectural features. Columns or pilasters, including bases and moldings, shall not project more than 12 inches (305 mm). Belt courses, lintels, sills, architraves, pediments and similar architectural features shall not project more than 4 inches (102 mm).

3202.2.3 Awnings. The vertical clearance from the public right-of-way to the lowest part of any *awning*, including valances, shall be not less than 7 feet (2134 mm).

3202.3 Encroachments 8 feet or more above grade. Encroachments 8 feet (2438 mm) or more above grade shall comply with Sections 3202.3.1 through 3202.3.4.

3202.3.1 Awnings, canopies, marquees and signs. *Awnings*, canopies, marquees and signs shall be constructed so as to support applicable loads as specified in Chapter 16. *Awnings*, canopies, marquees and signs with less than 15 feet (4572 mm) clearance above the sidewalk shall not extend into or occupy more than two-thirds the width of the sidewalk measured from the building. Stanchions or columns that support *awnings*, canopies, marquees and signs shall be located not less than 2 feet (610 mm) in from the curb line.

3202.3.2 Windows, balconies, architectural features and mechanical equipment. Where the vertical clearance above grade to projecting windows, balconies, architectural features or mechanical equipment is more than 8 feet (2438 mm), 1 inch (25 mm) of encroachment is permitted for each additional 1 inch (25 mm) of clearance above 8 feet (2438 mm), but the maximum encroachment shall be 4 feet (1219 mm).

3202.3.3 Encroachments 15 feet or more above grade. Encroachments 15 feet (4572 mm) or more above grade shall not be limited.

3202.3.4 Pedestrian walkways. The installation of a pedestrian walkway over a public right-of-way shall be subject to the approval of the applicable governing authority. The vertical clearance from the public right-of-way to the lowest part of a *pedestrian walkway* shall be not less than 15 feet (4572 mm).

3202.4 Temporary encroachments. Where allowed by the applicable governing authority, vestibules and storm enclosures shall not be erected for a period of time exceeding seven months in any one year and shall not encroach more than 3 feet (914 mm) nor more than one-fourth of the width of the sidewalk beyond the street *lot line*. Temporary entrance *awnings* shall be erected with a clearance of not less than 7 feet (2134 mm) to the lowest portion of the hood or *awning* where supported on removable steel or other *approved* noncombustible support.

CHAPTER 33

SAFEGUARDS DURING CONSTRUCTION

User note: Code change proposals to sections preceded by the designation [F] will be considered by the International Fire Code Development Committee during the 2016 (Group B) Code Development Cycle. See explanation on page iv.

SECTION 3301
GENERAL

3301.1 Scope. The provisions of this chapter shall govern safety during construction and the protection of adjacent public and private properties.

3301.2 Storage and placement. Construction equipment and materials shall be stored and placed so as not to endanger the public, the workers or adjoining property for the duration of the construction project.

SECTION 3302
CONSTRUCTION SAFEGUARDS

3302.1 Alterations, repairs and additions. Required *exits*, existing structural elements, fire protection devices and sanitary safeguards shall be maintained at all times during *alterations*, *repairs* or *additions* to any building or structure.

Exceptions:

1. Where such required elements or devices are being altered or repaired, adequate substitute provisions shall be made.
2. Maintenance of such elements and devices is not required when the existing building is not occupied.

3302.2 Manner of removal. Waste materials shall be removed in a manner that prevents injury or damage to persons, adjoining properties and public rights-of-way.

3302.3 Fire safety during construction. Fire safety during construction shall comply with the applicable requirements of this code and the applicable provisions of Chapter 33 of the *International Fire Code.*

SECTION 3303
DEMOLITION

3303.1 Construction documents. *Construction documents* and a schedule for demolition shall be submitted where required by the *building official.* Where such information is required, no work shall be done until such *construction documents* or schedule, or both, are *approved.*

3303.2 Pedestrian protection. The work of demolishing any building shall not be commenced until pedestrian protection is in place as required by this chapter.

3303.3 Means of egress. A *horizontal exit* shall not be destroyed unless and until a substitute *means of egress* has been provided and *approved.*

3303.4 Vacant lot. Where a structure has been demolished or removed, the vacant lot shall be filled and maintained to the existing grade or in accordance with the ordinances of the jurisdiction having authority.

3303.5 Water accumulation. Provision shall be made to prevent the accumulation of water or damage to any foundations on the premises or the adjoining property.

3303.6 Utility connections. Service utility connections shall be discontinued and capped in accordance with the *approved* rules and the requirements of the applicable governing authority.

3303.7 Fire safety during demolition. Fire safety during demolition shall comply with the applicable requirements of this code and the applicable provisions of Chapter 56 of the *International Fire Code.*

SECTION 3304
SITE WORK

3304.1 Excavation and fill. Excavation and fill for buildings and structures shall be constructed or protected so as not to endanger life or property. Stumps and roots shall be removed from the soil to a depth of not less than 12 inches (305 mm) below the surface of the ground in the area to be occupied by the building. Wood forms that have been used in placing concrete, if within the ground or between foundation sills and the ground, shall be removed before a building is occupied or used for any purpose. Before completion, loose or casual wood shall be removed from direct contact with the ground under the building.

3304.1.1 Slope limits. Slopes for permanent fill shall be not steeper than one unit vertical in two units horizontal (50-percent slope). Cut slopes for permanent excavations shall be not steeper than one unit vertical in two units horizontal (50-percent slope). Deviation from the foregoing limitations for cut slopes shall be permitted only upon the presentation of a soil investigation report acceptable to the *building official.*

3304.1.2 Surcharge. No fill or other surcharge loads shall be placed adjacent to any building or structure unless such building or structure is capable of withstanding the additional loads caused by the fill or surcharge. Existing footings or foundations that can be affected by any excavation shall be underpinned adequately or otherwise protected against settlement and shall be protected against lateral movement.

3304.1.3 Footings on adjacent slopes. For footings on adjacent slopes, see Chapter 18.

3304.1.4 Fill supporting foundations. Fill to be used to support the foundations of any building or structure shall

comply with Section 1804.6. *Special inspections* of compacted fill shall be in accordance with Section 1705.6.

SECTION 3305
SANITARY

3305.1 Facilities required. Sanitary facilities shall be provided during construction, remodeling or demolition activities in accordance with the *International Plumbing Code*.

SECTION 3306
PROTECTION OF PEDESTRIANS

3306.1 Protection required. Pedestrians shall be protected during construction, remodeling and demolition activities as required by this chapter and Table 3306.1. Signs shall be provided to direct pedestrian traffic.

3306.2 Walkways. A walkway shall be provided for pedestrian travel in front of every construction and demolition site unless the applicable governing authority authorizes the sidewalk to be fenced or closed. Walkways shall be of sufficient width to accommodate the pedestrian traffic, but in no case shall they be less than 4 feet (1219 mm) in width. Walkways shall be provided with a durable walking surface. Walkways shall be *accessible* in accordance with Chapter 11 and shall be designed to support all imposed loads and in no case shall the design live load be less than 150 pounds per square foot (psf) (7.2 kN/m^2).

3306.3 Directional barricades. Pedestrian traffic shall be protected by a directional barricade where the walkway extends into the street. The directional barricade shall be of sufficient size and construction to direct vehicular traffic away from the pedestrian path.

3306.4 Construction railings. Construction railings shall be not less than 42 inches (1067 mm) in height and shall be sufficient to direct pedestrians around construction areas.

3306.5 Barriers. Barriers shall be not less than 8 feet (2438 mm) in height and shall be placed on the side of the walkway nearest the construction. Barriers shall extend the entire length of the construction site. Openings in such barriers shall be protected by doors that are normally kept closed.

3306.6 Barrier design. Barriers shall be designed to resist loads required in Chapter 16 unless constructed as follows:

1. Barriers shall be provided with 2-inch by 4-inch (51 mm by 102 mm) top and bottom plates.
2. The barrier material shall be boards not less than $^3/_4$-inch (19.1 mm) thick or wood structural panels not less than $^1/_4$-inch (6.4 mm) thick.
3. Wood structural use panels shall be bonded with an adhesive identical to that for exterior wood structural use panels.
4. Wood structural use panels $^1/_4$ inch (6.4 mm) or $^5/_{16}$ inch (23.8 mm) in thickness shall have studs spaced not more than 2 feet (610 mm) on center.
5. Wood structural use panels $^3/_8$ inch (9.5 mm) or $^1/_2$ inch (12.7 mm) in thickness shall have studs spaced not more than 4 feet (1219 mm) on center provided a 2-inch by 4-inch (51 mm by 102 mm) stiffener is placed horizontally at mid-height where the stud spacing is greater than 2 feet (610 mm) on center.
6. Wood structural use panels $^5/_8$ inch (15.9 mm) or thicker shall not span over 8 feet (2438 mm).

3306.7 Covered walkways. Covered walkways shall have a clear height of not less than 8 feet (2438 mm) as measured from the floor surface to the canopy overhead. Adequate lighting shall be provided at all times. Covered walkways shall be designed to support all imposed loads. In no case shall the design live load be less than 150 psf (7.2 kN/m^2) for the entire structure.

Exception: Roofs and supporting structures of covered walkways for new, light-frame construction not exceeding two *stories* above *grade plane* are permitted to be designed for a live load of 75 psf (3.6kN/m^2) or the loads imposed on them, whichever is greater. In lieu of such designs, the roof and supporting structure of a covered walkway are permitted to be constructed as follows:

1. Footings shall be continuous 2-inch by 6-inch (51 mm by 152 mm) members.
2. Posts not less than 4 inches by 6 inches (102 mm by 152 mm) shall be provided on both sides of the roof and spaced not more than 12 feet (3658 mm) on center.
3. Stringers not less than 4 inches by 12 inches (102 mm by 305 mm) shall be placed on edge upon the posts.
4. Joists resting on the stringers shall be not less than 2 inches by 8 inches (51 mm by 203 mm) and shall be spaced not more than 2 feet (610 mm) on center.

TABLE 3306.1
PROTECTION OF PEDESTRIANS

HEIGHT OF CONSTRUCTION	DISTANCE FROM CONSTRUCTION TO LOT LINE	TYPE OF PROTECTION REQUIRED
8 feet or less	Less than 5 feet	Construction railings
	5 feet or more	None
More than 8 feet	Less than 5 feet	Barrier and covered walkway
	5 feet or more, but not more than one-fourth the height of construction	Barrier and covered walkway
	5 feet or more, but between one-fourth and one-half the height of construction	Barrier
	5 feet or more, but exceeding one-half the height of construction	None

5. The deck shall be planks not less than 2 inches (51 mm) thick or wood structural panels with an exterior exposure durability classification not less than $^{23}/_{32}$ inch (18.3 mm) thick nailed to the joists.
6. Each post shall be knee braced to joists and stringers by members not less than 2 inches by 4 inches (51 mm by 102 mm); 4 feet (1219 mm) in length.
7. A curb that is not less than 2 inches by 4 inches (51 mm by 102 mm) shall be set on edge along the outside edge of the deck.

3306.8 Repair, maintenance and removal. Pedestrian protection required by this chapter shall be maintained in place and kept in good order for the entire length of time pedestrians are subject to being endangered. The *owner* or the *owner's* authorized agent, upon the completion of the construction activity, shall immediately remove walkways, debris and other obstructions and leave such public property in as good a condition as it was before such work was commenced.

3306.9 Adjacent to excavations. Every excavation on a site located 5 feet (1524 mm) or less from the street *lot line* shall be enclosed with a barrier not less than 6 feet (1829 mm) in height. Where located more than 5 feet (1524 mm) from the street *lot line*, a barrier shall be erected where required by the *building official*. Barriers shall be of adequate strength to resist wind pressure as specified in Chapter 16.

SECTION 3307
PROTECTION OF ADJOINING PROPERTY

3307.1 Protection required. Adjoining public and private property shall be protected from damage during construction, remodeling and demolition work. Protection shall be provided for footings, foundations, party walls, chimneys, skylights and roofs. Provisions shall be made to control water runoff and erosion during construction or demolition activities. The person making or causing an excavation to be made shall provide written notice to the *owners* of adjoining buildings advising them that the excavation is to be made and that the adjoining buildings should be protected. Said notification shall be delivered not less than 10 days prior to the scheduled starting date of the excavation.

SECTION 3308
TEMPORARY USE OF STREETS, ALLEYS AND PUBLIC PROPERTY

3308.1 Storage and handling of materials. The temporary use of streets or public property for the storage or handling of materials or of equipment required for construction or demolition, and the protection provided to the public shall comply with the provisions of the applicable governing authority and this chapter.

3308.1.1 Obstructions. Construction materials and equipment shall not be placed or stored so as to obstruct access to fire hydrants, standpipes, fire or police alarm boxes, catch basins or manholes, nor shall such material or equipment be located within 20 feet (6096 mm) of a street intersection, or placed so as to obstruct normal observations of traffic signals or to hinder the use of public transit loading platforms.

3308.2 Utility fixtures. Building materials, fences, sheds or any obstruction of any kind shall not be placed so as to obstruct free approach to any fire hydrant, fire department connection, utility pole, manhole, fire alarm box or catch basin, or so as to interfere with the passage of water in the gutter. Protection against damage shall be provided to such utility fixtures during the progress of the work, but sight of them shall not be obstructed.

SECTION 3309
FIRE EXTINGUISHERS

[F] 3309.1 Where required. Structures under construction, *alteration* or demolition shall be provided with no fewer than one *approved* portable fire extinguisher in accordance with Section 906 and sized for not less than ordinary hazard as follows:

1. At each *stairway* on all floor levels where combustible materials have accumulated.
2. In every storage and construction shed.
3. Additional portable fire extinguishers shall be provided where special hazards exist, such as the storage and use of flammable and combustible liquids.

[F] 3309.2 Fire hazards. The provisions of this code and the *International Fire Code* shall be strictly observed to safeguard against all fire hazards attendant upon construction operations.

SECTION 3310
MEANS OF EGRESS

3310.1 Stairways required. Where a building has been constructed to a *building height* of 50 feet (15 240 mm) or four *stories*, or where an existing building exceeding 50 feet (15 240 mm) in *building height* is altered, no fewer than one temporary lighted *stairway* shall be provided unless one or more of the permanent stairways are erected as the construction progresses.

3310.2 Maintenance of means of egress. Required *means of egress* shall be maintained at all times during construction, demolition, remodeling or *alterations* and *additions* to any building.

Exception: Existing means of egress need not be maintained where *approved* temporary *means of egress* systems and facilities are provided.

SECTION 3311
STANDPIPES

[F] 3311.1 Where required. In buildings required to have standpipes by Section 905.3.1, no fewer than one standpipe shall be provided for use during construction. Such standpipes shall be installed prior to construction exceeding 40 feet (12 192 mm) in height above the lowest level of fire depart-

ment vehicle access. Such standpipes shall be provided with fire department hose connections at accessible locations adjacent to usable *stairways*. Such standpipes shall be extended as construction progresses to within one floor of the highest point of construction having secured decking or flooring.

[F] 3311.2 Buildings being demolished. Where a building is being demolished and a standpipe exists within such a building, such standpipe shall be maintained in an operable condition so as to be available for use by the fire department. Such standpipe shall be demolished with the building but shall not be demolished more than one floor below the floor being demolished.

[F] 3311.3 Detailed requirements. Standpipes shall be installed in accordance with the provisions of Chapter 9.

Exception: Standpipes shall be either temporary or permanent in nature, and with or without a water supply, provided that such standpipes conform to the requirements of Section 905 as to capacity, outlets and materials.

SECTION 3312
AUTOMATIC SPRINKLER SYSTEM

[F] 3312.1 Completion before occupancy. In buildings where an *automatic sprinkler system* is required by this code, it shall be unlawful to occupy any portion of a building or structure until the *automatic sprinkler system* installation has been tested and *approved*, except as provided in Section 111.3.

[F] 3312.2 Operation of valves. Operation of sprinkler control valves shall be permitted only by properly authorized personnel and shall be accompanied by notification of duly designated parties. When the sprinkler protection is being regularly turned off and on to facilitate connection of newly completed segments, the sprinkler control valves shall be checked at the end of each work period to ascertain that protection is in service.

SECTION 3313
WATER SUPPLY FOR FIRE PROTECTION

[F] 3313.1 Where required. An *approved* water supply for fire protection, either temporary or permanent, shall be made available as soon as combustible material arrives on the site.

CHAPTER 34

RESERVED

Action taken during the 2012 Code Development Process removed Chapter 34, Existing Structures, from the IBC. The provisions of this chapter are contained in the International Existing Building Code. See Section 101.4.7.

CHAPTER 35
REFERENCED STANDARDS

This chapter lists the standards that are referenced in various sections of this document. The standards are listed herein by the promulgating agency of the standard, the standard identification, the effective date and title, and the section or sections of this document that reference the standard. The application of the referenced standards shall be as specified in Section 102.4.

AA

Aluminum Association
1525 Wilson Boulevard, Suite 600
Arlington, VA 22209

Standard reference number	Title	Referenced in code section number
ADM1—2015	Aluminum Design Manual: Part 1—A Specification for Aluminum Structures	1604.3.5, 2002.1
ASM 35—00	Aluminum Sheet Metal Work in Building Construction (Fourth Edition)	2002.1

AAMA

American Architectural Manufacturers Association
1827 Waldon Office Square, Suite 550
Schaumburg, IL 60173

Standard reference number	Title	Referenced in code section number
1402—09	Standard Specifications for Aluminum Siding, Soffit and Fascia	1404.5.1
AAMA/WDMA/CSA 101/I.S.2/A440—11	North American Fenestration Standard/Specifications for Windows, Doors and Skylights	1709.5.1, 2405.5

ACI

American Concrete Institute
38800 Country Club Drive
Farmington Hills, MI 48331

Standard reference number	Title	Referenced in code section number
216.1—14	Code Requirements for Determining Fire Resistance of Concrete and Masonry Construction Assemblies	Table 721.1(2), 722.1
318—14	Building Code Requirements for Structural Concrete	1604.3.2, 1615.3.1, 1615.4.1, 1704.5, Table 1705.3, 1705.3.2, 1705.12.1, 1808.8.2, Table 1808.8.2, 1808.8.5, 1808.8.6, 1810.1.3, 1810.2.4.1, 1810.3.2.1.1, 1810.3.2.1.2, 1810.3.8.3.1, 1810.3.8.3.3, 1810.3.9.4.2.1, 1810.3.9.4.2.2, 1810.3.10.1, 1810.3.11.1, 1901.2, 1901.3, 1902.1, 1903.1, 1904.1, 1904.2, 1905.1, 1905.1.1, 1905.1.2, 1905.1.3, 1905.1.4, 1905.1.5, 1905.1.6, 1905.1.7, 1905.1.8 1906.1, 2108.3, 2206.1
530—13	Building Code Requirements for Masonry Structures	1405.6, 1405.6.1, 1405.6.2, 1405.10, 1604.3.4, 1705.4, 1705.4.1, 1807.1.6.3, 1807.1.6.3.2, 1808.9 2101.2, 2106.1, 2107.1, 2107.2, 2107.3, 2107.4, 2108.1, 2108.2, 2108.3, 2109.1, 2109.1.1, 2109.2, 2109.2.1, 2109.3, 2110.1
530.1—13	Specifications for Masonry Structures	1405.6.1, 1705.4, 1807.1.6.3, 2103.1, 2103. 2.1, 2103.3, 2103.4, 2105.1

AISC

American Institute of Steel
Construction One East Wacker Drive, Suite 700
Chicago, IL 60601-18021

Standard reference number	Title	Referenced in code section number
341—10	Seismic Provisions for Structural Steel Buildings	1613.4.1, 1705.12.1.1, 1705.12.1.2, 1705.13.1.1, 1705.13.1.2, 2205.2.1.1, 2205.2.1.2, 2205.2.2, 2206.2.1
360—10	Specification for Structural Steel Buildings	722.5.2.2.1, 1604.3.3, 1705.2.1, 2203.1, 2203.2, 2205.1, 2205.2.1.1, 2206.1

AISI

American Iron and Steel Institute
25 Massachusetts Avenue, NW Suite 800
Washington, DC 20001

Standard reference number	Title	Referenced in code section number
AISI S100—12	North American Specification for the Design of Cold-formed Steel Structural Members, 2012	1604.3.3, 1905.1.8, 2203.1, 2203.2, 2210.1, 2210.2, 2211.2, 2211.4, 2211.6
AISI S110—07/ S1-09 (2012)	Standard for Seismic Design of Cold-Formed Steel Structural Systems—Special Moment Frames, 2007 with Supplement 1, dated 2009 (Reaffirmed 2012)	2210.2
AISI S200—12	North American Standard for Cold-Formed Steel Framing-General Provisions	2203.1, 2203.2, 2211.1, Table 2603.12.1, Table 2603.12.2
AISI S210—07(2012)	North American Standard for Cold-Formed Steel Framing-Floor and Roof System Design (Reaffirmed 2012)	2211.5
AISI S211—07/ S1-12(2012)	North American Standard for Cold-Formed Steel Framing-Wall Stud Design, 2007 including Supplement 1, dated 2012 (Reaffirmed 2012)	2211.4
AISI S212—07(2012)	North American Standard for Cold-Formed Steel Framing-Header Design, 2007, (Reaffirmed 2012)	2211.2
AISI S213—07/ S1-09 (2012)	North American Standard for Cold-Formed Steel Framing-Lateral Design, with Supplement 1, dated 2009, (Reaffirmed 2012)	2211.6
S214—12	North American Standard for Cold-formed Steel Framing-Truss Design, 2012	2211.3, 2211.3.1, 2211.3.2
AISI S220—11	North American Standard for Cold-formed Steel Framing-Nonstructural Members	2203.1, 2203.2, 2211.1, Table 2506.2, Table 2507.2
AISI S230—07/ S3-12(2012)	Standard for Cold-formed Steel Framing-Prescriptive Method for One- and Two-family Dwellings, 2007, with Supplement 3, dated 2012 (Reaffirmed 2012)	1609.1.1, 1609.1.1.1, 2211.7

ALI

Automotive Lift Institute
P.O. Box 85
Courtland, NY 13045

Standard reference number	Title	Referenced in code section number
ALI ALCTV—2011	Standard for Automotive Lifts—Safety Requirements for Construction, Testing and Validation (ANSI)	3001.2

AMCA

Air Movement and Control Association International
30 West University Drive
Arlington Heights, IL 60004

Standard reference number	Title	Referenced in code section number
540—08	Test Method for Louvers Impacted by Wind Borne Debris	1609.1.2.1

ANSI

American National Standards Institute
25 West 43rd Street, Fourth Floor
New York, NY 10036

Standard reference number	Title	Referenced in code section number
A13.1—2007	Scheme for the Identification of Piping Systems	415.11.6.5
A108.1A—99	Installation of Ceramic Tile in the Wet-set Method, with Portland Cement Mortar	2103.2.3
A108.1B—99	Installation of Ceramic Tile, quarry Tile on a Cured Portland Cement Mortar Setting Bed with Dry-set or Latex-Portland Mortar	2103.2.3
A108.4—99	Installation of Ceramic Tile with Organic Adhesives or Water-cleanable Tile-setting Epoxy Adhesive	2103.2.3.6
A108.5—99	Installation of Ceramic Tile with Dry-set Portland Cement Mortar or Latex-Portland Cement Mortar	2103.2.3.1, 2103.2.3.2
A108.6—99	Installation of Ceramic Tile with Chemical-resistant, Water Cleanable Tile-setting and -grouting Epoxy	2103.2.3.3
A108.8—99	Installation of Ceramic Tile with Chemical-resistant Furan Resin Mortar and Grout	2103.2.3.4
A108.9—99	Installation of Ceramic Tile with Modified Epoxy Emulsion Mortar/Grout	2103.2.3.5
A108.10—99	Installation of Grout in Tilework	2103.2.3.7
A118.1—99	American National Standard Specifications for Dry-set Portland Cement Mortar	2103.2.3.1
A118.3—99	American National Standard Specifications for Chemical-resistant, Water-cleanable Tile-setting and -grouting Epoxy and Water Cleanable Tile-setting Epoxy Adhesive	2103.2.3.3
A118.4—99	American National Standard Specifications for Latex-Portland Cement Mortar	2103.2.3.2, 2103.3.2.4
A118.5—99	American National Standard Specifications for Chemical Resistant Furan Mortar and Grouts for Tile Installation	2103.2.3.4
A118.6—99	American National Standard Specifications for Cement Grouts for Tile Installation	2103.2.3.7
A118.8—99	American National Standard Specifications for Modified Epoxy Emulsion Mortar/Grout	2103.2.3.5
A136.1—99	American National Standard Specifications for Organic Adhesives for Installation of Ceramic Tile	2103.2.3.6
A137.1—12	American National Standard Specifications for Ceramic Tile	202
ANSI/A 190.1—12	Structural Glued Laminated Timber	2303.1.3, 2306.1
Z 97.1—14	Safety Glazing Materials Used in Buildings—Safety Performance Specifications and Methods of Test	2406.1.2, 2406.2, Table 2406.2(2), 2406.3.1, 2407.1, 2407.1.4.1, 2408.2.1, 2408.3, 2409.2, 2409.3, 2409.4.1

APA

APA - Engineered Wood Association
7011 South 19th
Tacoma, WA 98466

Standard reference number	Title	Referenced in code section number
ANSI/A 190.1—12	Structural Glued Laminated Timber	2303.1.3, 2306.1
ANSI/APA PRP 210—08	Standard for Performance-Rated Engineered Wood Siding	2303.1.5, 2304.7, 2306.3, Table 2306.3(1)
ANSI/APA PRR 410—11	Standard for Performance-Rated Engineered Wood Rim Boards	2303.1.13
APA PDS—12	Panel Design Specification	2306.1
APA PDS Supplement 1—12	Design and Fabrication of Plywood Curved Panels (revised 2013)	2306.1
APA PDS Supplement 2—12	Design and Fabrication of Plywood-lumber Beams (revised 2013)	2306.1
APA PDS Supplement 3—12	Design and Fabrication of Plywood Stressed-skin Panels (revised 2013)	2306.1

APA—continued

APA PDS Supplement 4—12	Design and Fabrication of Plywood Sandwich Panels (revised 2013)	2306.1
APA PDS Supplement 5—12	Design and Fabrication of All-plywood Beams (revised 2013)	2306.1
APA PRG 320—11	Standard for Performance-Rated Cross-Laminated Timber	2303.1.4
EWS R540—12	Builders Tips: Proper Storage and Handling of Glulam Beams	2306.1
EWS S475—07	Glued Laminated Beam Design Tables	2306.1
EWS S560—10	Field Notching and Drilling of Glued Laminated Timber Beams	2306.1
EWS T300—07	Glulam Connection Details	2306.1
EWS X440—08	Product Guide-Glulam	2306.1
EWS X450—01	Glulam in Residential Construction-Western Edition	2306.1

APSP

The Association of Pool & Spa Professionals
2111 Eisenhower Avenue
Alexandria, VA 22314

Standard reference number	Title	Referenced in code section number
ANSI/APSP 7—2013	Standard for Suction Entrapment Avoidance in Swimming Pools, Wading Pools, Spas, Hot Tubs and Catch Basins	3109.5

ASABE

American Society of Agricultural and Biological Engineers
2950 Niles Road
St. Joseph, MI 49085

Standard reference number	Title	Referenced in code section number
EP 484.2 June 1998 (R2008)	Diaphragm Design of Metal-clad, Wood-frame Rectangular Buildings	2306.1
EP 486.2 OCT 2012	Shallow-post and Pier Foundation Design	2306.1
EP 559.1 W/Corr.1 AUG 2010	Design Requirements and Bending Properties for Mechanically Laminated Wood Assemblies	2306.1

ASCE/SEI

American Society of Civil Engineers
Structural Engineering Institute
1801 Alexander Bell Drive
Reston, VA 20191-4400

Standard reference number	Title	Referenced in code section number
5—13	Building Code Requirements for Masonry Structures	1405.6, 1405.6.1, 1405.6.2, 1405.10, 1604.3.4, 1705.4, 1705.4.1, 1807.1.6.3, 1807.1.6.3.2, 1808.9, 2101.2, 2106.1, 2107.1, 2107.2, 2107.3, 2107.4, 2108.1, 2108.2, 2108.3, 2109.1, 2109.1.1, 2109.2, 2109.2.1, 2109.3, 2110.1
6—13	Specification for Masonry Structures	1405.6.1, 1705.4, 1807.1.6.3, 2103.1, 2103.2.1, 2103.3, 2103.4, 2104.1, 2105.1

ASCE/SEI—continued

7—10	Minimum Design Loads for Buildings and Other Structures with Supplement No. 1	202, Table 1504.8, 1602.1, 1604.3, Table 1604.5, 1604.8.2, 1604.10, 1605.1, 1605.2.1, 1605.3.1, 1605.3.1.2, 1605.3.2, 1605.3.2.1, 1607.8.1, 1607.8.1.1, 1607.8.1.2, 1607.8.3, 1607.12.1, 1608.1, 1608.2, 1608.3, 1609.1.1, 1609.1.2, 1609.3, 1609.5.1, 1609.5.3, 1609.6, 1609.6.1, 1609.6.1.1, 1609.6.2, Table 1609.6.2, 1609.6.3, 1609.6.4.1, 1609.6.4.2, 1609.6.4.4.1, 1611.2, 1612.4, 1613.1, 1613.3.2, Table 1613.3.3(1), Table 1613.3.3(2), 1613.3.5, 1613.3.5.1, 1613.3.5.2, 1613.4, 1613.4.1, 1613.5.1, 1613.6, 1614.1, 1704.6.1, 1705.12, 1705.12.4, 1705.13.2, 1705.13.3, 1705.13.4, 1803.5.12, 1808.3.1, 1810.3.6.1, 1810.3.9.4, 1810.3.11.2, 1810.3.12, 1905.1.1, 1905.1.2, 1905.1.8, 2205.2.1.1, 2205.2.1.2, 2205.2.2, 2206.2.1, 2209.1, 2210.2, 2304.6.1, 2404.1, 2505.1, 2505.2, 2506.2.1
8—14	Standard Specification for the Design of Cold-formed Stainless Steel Structural Members	1604.3.3, 2210.1, 2210.2
19—09	Structural Applications of Steel Cables for Buildings	2208.1, 2208.2
24—13	Flood Resistant Design and Construction	1203.4.2, 1612.4, 1612.5, 2702.1.7, 3001.2
29—14	Standard Calculation Methods for Structural Fire Protection	722.1
32—01	Design and Construction of Frost Protected Shallow Foundations	1809.5
49—07	Wind Tunnel Testing for Buildings and Other Structures	1609.1.1
55—10	Tensile Membrane Structures	3102.1.1

ASME

American Society of Mechanical Engineers
Two Park Avenue
New York, NY 10016-5990

Standard reference number	Title	Referenced in code section number
ASME/A17.1—13 CSA B44—2013	Safety Code for Elevators and Escalators	907.3.3, 911.1.5, 1009.4, 1607.9.1, 3001.2, 3001.4, 3002.5, 3003.2, 3007.1, 3008.1.3, 3008.7.1
A17.7—2007/ CSA B44—07	Performance-Based Safety Code for Elevators and Escalators	3001.2
A18.1—2008	Safety Standard for Platform Lifts and Stairway Chairlifts	1109.8
A90.1—09	Safety Standard for Belt Manlifts	3001.2
B16.18—2012	Cast Copper Alloy Solder Joint Pressure Fittings	909.13.1
B16.22—2001(R2010)	Wrought Copper and Copper Alloy Solder Joint Pressure Fittings	909.13.1
B20.1—2009	Safety Standard for Conveyors and Related Equipment	3001.2, 3004.3
B31.3—2012	Process Piping	415.11.6

ASSE

American Society of Safety Engineers
1800 East Oakton Street
Des Plaines, IL 60018

Standard reference number	Title	Referenced in code section number
ANSI/ASSE Z359.1-2007	Safety Requirements for Personal Fall Arrest Systems, Subsystems and Components, Part of the Fall Protection Code	1015.6, 1015.7

ASTM

ASTM International
100 Barr Harbor Drive
West Conshohocken, PA 19428-2959

Standard reference number	Title	Referenced in code section number
A 6/A 6M—11	Standard Specification for General Requirements for Rolled Structural Steel Bars, Plates, Shapes and Sheet	1810.3.2.3, 1810.3.5.3.1, 1810.3.5.3.3
A 36/A 36M—08	Specification for Carbon Structural Steel	1810.3.2.3

ASTM—continued

A 153/A 153M—09	Specification for Zinc Coating (Hot-dip) on Iron and Steel Hardware	2304.10.5
A 240/A 240M—13A	Standard Specification for Chromium and Chromium-nickel Stainless Steel Plate, Sheet and Strip for Pressure Vessels and for General Applications	Table 1507.4.3(1)
A 252—10	Specification for Welded and Seamless Steel Pipe Piles	1810.3.2.3
A 283/A 283M—12A	Specification for Low and Intermediate Tensile Strength Carbon Steel Plates	1810.3.2.3
A 416/A 416M—12A	Specification for Steel Strand, Uncoated Seven-wire for Prestressed Concrete	1810.3.2.2
A 463/A 463M—10	Standard Specification for Steel Sheet, Aluminum-coated, by the Hot-dip Process	Table 1507.4.3(2)
A 572/A 572M—12A	Specification for High-strength Low-alloy Columbium-Vanadium Structural Steel	1810.3.2.3
A 588/A 588M—10	Specification for High-strength Low-alloy Structural Steel with 50 ksi (345 MPa) Minimum Yield Point with Atmospheric Corrosion Resistance	1810.3.2.3
A 615/A 615M—12	Specification for Deformed and Plain Billet-steel Bars for Concrete Reinforcement	1704.5, 1810.3.10.2
A 653/A 653M—11	Specification for Steel Sheet, Zinc-coated Galvanized or Zinc-iron Alloy-coated Galvannealed by the Hot-dip Process	Table 1507.4.3(1), Table 1507.4.3(2), 2304.10.5.1
A 690/A 690M—07(2012)	Standard Specification for High-strength Low-alloy Nickel, Copper, Phosphorus Steel H-piles and Sheet Piling with Atmospheric Corrosion Resistance for Use in Marine Environments	1810.3.2.3
A 706/A 706M—09b	Specification for Low-alloy Steel Deformed and Plain Bars for Concrete Reinforcement	1704.5, 2107.4, 2108.3
A 722/A 722M—12	Specification for Uncoated High-strength Steel Bar for Prestressing Concrete	1810.3.10.2
A 755/A 755M—2011	Specification for Steel Sheet, Metallic-coated by the Hot-dip Process and Prepainted by the Coil-coating Process for Exterior Exposed Building Products	Table 1507.4.3(1), Table 1507.4.3(2)
A 792/A 792M—10	Specification for Steel Sheet, 55% Aluminum-zinc Alloy-coated by the Hot-dip Process	Table 1507.4.3(1), Table 1507.4.3(2)
A 875/A 875M—13	Standard Specification for Steel Sheet Zinc-5 percent, Aluminum Alloy-coated by the Hot-dip Process	Table 1507.4.3(2)
A 924/A 924M—13	Standard Specification for General Requirements for Steel Sheet, Metallic-coated by the Hot-dip Process	Table 1507.4.3(1)
B 42—10	Specification for Seamless Copper Pipe, Standard Sizes	909.13.1
B 43—09	Specification for Seamless Red Brass Pipe, Standard Sizes	909.13.1
B 68—11	Specification for Seamless Copper Tube, Bright Annealed (Metric)	909.13.1
B 88—09	Specification for Seamless Copper Water Tube	909.13.1
B 101—12	Specification for Lead-coated Copper Sheet and Strip for Building Construction	1404.5.3, Table 1507.2.9.2, Table 1507.4.3(1)
B 209—10	Specification for Aluminum and Aluminum Alloy Steel and Plate	Table 1507.4.3(1)
B 251—10	Specification for General Requirements for Wrought Seamless Copper and Copper-alloy Tube	909.13.1
B 280—08	Specification for Seamless Copper Tube for Air Conditioning and Refrigeration Field Service	909.13.1
B 370—12	Specification for Copper Sheet and Strip for Building Construction	1404.5.2, Table 1507.2.9.2, Table 1507.4.3(1)
B 695—04(2009)	Standard Specification for Coatings of Zinc Mechanically Deposited on Iron and Steel Strip for Building Construction	2304.10.5.1, 2304.10.5.3
C 5—10	Specification for Quicklime for Structural Purposes	Table 2507.2
C 22/C 22M-00(2010)	Specification for Gypsum	Table 2506.2
C 27—98(2008)	Specification for Classification of Fireclay and High-alumina Refractory Brick	2111.6
C 28/C 28M—10	Specification for Gypsum Plasters	Table 2507.2
C 31/C 31M—12	Practice for Making and Curing Concrete Test Specimens in the Field	Table 1705.3
C 33/C 33M—13	Specification for Concrete Aggregates	722.3.1.4, 722.4.1.1.3
C 35/C 35M-1995(2009)	Specification for Inorganic Aggregates for Use in Gypsum Plaster	Table 2507.2
C 55—2011	Specification for Concrete Building Brick	Table 722.3.2
C 59/C 59M—00 (2011)	Specification for Gypsum Casting Plaster and Molding Plaster	Table 2507.2
C 61/C 61M—00 (2011)	Specification for Gypsum Keene's Cement	Table 2507.2
C 62—13	Standard Specification for Building Brick (Solid Masonry Units Made from Clay or Shale)	1807.1.6.3
C 67—13	Test Methods of Sampling and Testing Brick and Structural Clay Tile	721.4.1.1.1, 2109.3.1.1
C 73—10	Specification for Calcium Silicate Brick (Sand-lime Brick)	Table 722.3.2
C 90—13	Specification for Loadbearing Concrete Masonry Units	Table 722.3.2, 1807.1.6.3
C 91—12	Specification for Masonry Cement	Table 2507.2
C 94/C 94M—13	Specification for Ready-Mixed Concrete	110.3.1
C 140—13	Test Method Sampling and Testing Concrete Masonry Units and Related Units	722.3.1.2
C 150—12	Specification for Portland Cement	1903.1, Table 2507.2
C 172/C 172M—10	Practice for Sampling Freshly Mixed Concrete	Table 1705.3
C 199—84 (2011)	Test Method for Pier Test for Refractory Mortars	2111.6, 2111.9, 2113.12
C 206—13	Specification for Finishing Hydrated Lime	Table 2507.2

ASTM—continued

C 208—12	Specification for Cellulosic Fiber Insulating Board	Table 1508.2, 2303.1.6
C 216—13	Specification for Facing Brick (Solid Masonry Units Made from Clay or Shale)	1807.1.6.3
C 270—12a	Specification for Mortar for Unit Masonry	2103.3.2.4
C 315—07(2011)	Specification for Clay Flue Liners and Chimney Pots	2111.9, 2113.11.1, Table 2113.16(1)
C 317/C 317M—00(2010)	Specification for Gypsum Concrete	2514.1
C 330/C 330M—2009	Specification for Lightweight Aggregates for Structural Concrete	202
C 331/C 331M—2010	Specification for Lightweight Aggregates for Concrete Masonry Units	722.3.1.4, 722.4.1.1.3
C 406/C 406M—2010	Specification for Roofing Slate	1507.7.5
C 472—99 (2009)	Specification for Standard Test Methods for Physical Testing of Gypsum, Gypsum Plasters and Gypsum Concrete	Table 2506.2
C 473—12	Test Method for Physical Testing of Gypsum Panel Products	Table 2506.2
C 474—13	Test Methods for Joint Treatment Materials for Gypsum Board Construction	Table 2506.2
C 475/C 475M—12	Specification for Joint Compound and Joint Tape for Finishing Gypsum Board	Table 2506.2
C 514—04(2009)e1	Specification for Nails for the Application of Gypsum Board	Table 721.1(2), Table 721.1(3), Table 2306.7, Table 2506.2
C 516—08	Specifications for Vermiculite Loose Fill Thermal Insulation	722.3.1.4, 722.4.1.1.3
C 547—12	Specification for Mineral Fiber Pipe Insulation	Table 721.1(2), Table 721.1(3)
C 549—06(2012)	Specification for Perlite Loose Fill Insulation	722.3.1.4, 722.4.1.1.3
C 552—12b	Standard Specification for Cellular Glass Thermal Insulation	Table 1508.2
C 557—03(2009)e01	Specification for Adhesives for Fastening Gypsum Wallboard to Wood Framing	Table 2506.2
C 578—12b	Standard Specification for Rigid, Cellular Polystyrene Thermal Insulation	Table 1508.2, 2603.10, Table 2603.12.1, Table 2603.12.2
C 587—04(2009)	Specification for Gypsum Veneer Plaster	Table 2507.2
C 595/C 595—13	Specification for Blended Hydraulic Cements	1903.1, Table 2507.2
C 631—09	Specification for Bonding Compounds for Interior Gypsum Plastering	Table 2507.2
C 635/C 635M—13	Specification for the Manufacture, Performance and Testing of Metal Suspension Systems for Acoustical Tile and Lay-in Panel Ceilings	808.1.1, 2506.2.1
C 636/C 636M—08	Practice for Installation of Metal Ceiling Suspension Systems for Acoustical Tile and Lay-in Panels	808.1.1.1
C 645—13	Specification for Nonstructural Steel Framing Members	Table 2506.2, Table 2507.2
C 652—13	Specification for Hollow Brick (Hollow Masonry Units Made from Clay or Shale)	1807.1.6.3
C 726—12	Standard Specification for Mineral Roof Insulation Board	Table 1508.2
C 728—05(2013)	Standard Specification for Perlite Thermal Insulation Board	Table 1508.2
C 744—11	Specification for Prefaced Concrete and Calcium Silicate Masonry Units	Table 722.3.2
C 754—11	Specification for Installation of Steel Framing Members to Receive Screw-attached Gypsum Panel Products	Table 2508.1, Table 2511.1.1
C 836/C 836M—12	Specification for High-solids Content, Cold Liquid-applied Elastomeric Waterproofing Membrane for Use with Separate Wearing Course	1507.15.2
C 840—11	Specification for Application and Finishing of Gypsum Board	Table 2508.1, 2509.2
C 841—03(2008)E1	Specification for Installation of Interior Lathing and Furring	Table 2508.1, Table 2511.1.1
C 842—05(2010)E1	Specification for Application of Interior Gypsum Plaster	Table 2511.1.1, 2511.3, 2511.4
C 843—99 (2012)	Specification for Application of Gypsum Veneer Plaster	Table 2511.1.1
C 844—04(2010)	Specification for Application of Gypsum Base to Receive Gypsum Veneer Plaster	Table 2508.1
C 847—12	Specification for Metal Lath	Table 2507.2
C 887—05(2010)	Specification for Packaged, Dry Combined Materials for Surface Bonding Mortar	1805.2.2, 2103.2.2
C 897—05(2009)	Specification for Aggregate for Job-Mixed Portland Cement-based Plaster	Table 2507.2
C 920—11	Standard for Specification for Elastomeric Joint Sealants	Table 2506.2
C 926—13	Specification for Application of Portland Cement-based Plaster	2109.3.4.8, 2510.3, Table 2511.1.1, 2511.3, 2511.4, 2512.1, 2512.1.2, 2512.2, 2512.6, 2512.8.2, 2512.9, 2513.7
C 932—06(2013)	Specification for Surface-applied Bonding Compounds for Exterior Plastering	Table 2507.2
C 933—13	Specification for Welded Wire Lath	Table 2507.2
C 946—10	Specification for Construction of Dry-stacked, Surface-bonded Walls	2103.2.2, 2109.2.2
C 954—11	Specification for Steel Drill Screws for the Application of Gypsum Panel Products or Metal Plaster Bases to Steel Studs from 0.033 inch (0.84 mm) to 0.112 inch (2.84 mm) in Thickness	Table 2506.2, Table 2507.2
C 955—11C	Standard Specification for Load-bearing Transverse and Axial Steel Studs, Runners Tracks, and Bracing or Bridging, for Screw Application of Gypsum Panel Products and Metal Plaster Bases	Table 2506.2, Table 2507.2
C 956—04(2010)	Specification for Installation of Cast-in-place Reinforced Gypsum Concrete	2514.1
C 957—10	Specification for High-solids Content, Cold Liquid-applied Elastomeric Waterproofing Membrane with Integral Wearing Surface	1507.15.2
C 1002—07	Specification for Steel Self-piercing Tapping Screws for the Application of Gypsum Panel Products or Metal Plaster Bases to Wood Studs or Steel Studs	Table 2506.2, Table 2507.2
C 1007—11a	Specification for Installation of Load Bearing (Transverse and Axial) Steel Studs and Related Accessories	Table 2508.1, Table 2511.1.1

ASTM—continued

C 1029—13	Specification for Spray-applied Rigid Cellular Polyurethane Thermal Insulation	1507.14.2
C 1032—06(2011)	Specification for Woven Wire Plaster Base	Table 2507.2
C 1047—10A	Specification for Accessories for Gypsum Wallboard and Gypsum Veneer Base	Table 2506.2, Table 2507.2
C 1063—12D	Specification for Installation of Lathing and Furring to Receive Interior and Exterior Portland Cement-based Plaster	2109.3.4.8, 2510.3, Table 2511.1.1, 2512.1.1
C 1088—13	Specification for Thin Veneer Brick Units Made from Clay or Shale	Table 721.1(2)
C 1157/C 1157M—11	Standard Performance Specification for Hydraulic Cement	1903.1, Table 2507.2
C 1167—11	Specification for Clay Roof Tiles	1507.3.4
C 1177/C 1177M—08	Specification for Glass Mat Gypsum Substrate for Use as Sheathing	Table 1508.2, Table 2506.2
C 1178/C 1178M—11	Specification for Coated Mat Water-resistant Gypsum Backing Panel	Table 2506.2, Table 2509.2
C 1186—08(2012)	Specification for Flat Fiber Cement Sheets	1404.10, 1405.16.1, 1405.16.2
C 1261—10	Specification for Firebox Brick for Residential Fireplaces	2111.6, 2111.9
C 1278/ C 1278M—07a(2011)	Specification for Fiber-reinforced Gypsum Panels	Table 1508.2, Table 2506.2
C 1280—13	Specification for Application of Exterior Gypsum Panel Products for Use as Sheathing	Table 2508.1, 2508.2
C 1283—11	Practice for Installing Clay Flue Lining	2113.9.1, 2113.12
C 1288—99(2010)	Standard Specification for Discrete Nonasbestos Fiber-cement Interior Substrate Sheets	Table 2509.2
C 1289—13E1	Standard Specification for Faced Rigid Cellular Polyisocyanurate Thermal Insulation Board	Table 1508.2 2603.0, Table 2603.12.1, Table 2603.12.2
C 1313/C 1313M—12	Standard Specification for Sheet Radiant Barriers for Building Construction Applications	1509.4
C 1325—08b	Standard Specification for Nonasbestos Fiber-mat Reinforced Cement Backer Units	Table 2509.2
C 1328/C 1328M—12	Specification for Plastic (Stucco Cement)	Table 2507.2
C 1364—10B	Standard Specification for Architectural Cast Stone	2103.1
C 1386—07	Specification for Precast Autoclaved Aerated Concrete (AAC) Wall Construction Units	202
C 1396M/C 1396M—13	Specification for Gypsum Board	Figure 722.5.1(2), Figure 722.5.1(3)
C 1492—03(2009)	Standard Specification for Concrete Roof Tile	1507.3.5
C 1600/C 1600M—11	Standard Specification for Rapid Hardening Hydraulic Cement	Table 2507.2
C 1629/ C 1629M—06(2011)	Standard Classification for Abuse-resistant Nondecorated Interior Gypsum Panel Products and Fiber-reinforced Cement Panels	403.2.3.1, 403.2.3.2, 403.2.3.4
C 1658/C 1658M—12	Standard Specification for Glass Mat Gypsum Panels	Table 2506.2
D 25—12	Specification for Round Timber Piles	1810.3.2.4, 2303.1.12
D 41—05	Specification for Asphalt Primer Used in Roofing, Dampproofing and Waterproofing	Table 1507.10.2
D 43—00 (2006)	Specification for Coal Tar Primer Used in Roofing, Dampproofing and Waterproofing	Table 1507.10.2
D 56—05(2010)	Test Method for Flash Point By Tag Closed Tester	202
D 86—2012	Test Method for Distillation of Petroleum Products at Atmospheric Pressure	202
D 93—2012	Test Method for Flash Point By Pensky-Martens Closed Cup Tester	202
D 225—07	Specification for Asphalt Shingles (Organic Felt) Surfaced with Mineral Granules	1507.2.5
D 226/D 226M—09	Specification for Asphalt-saturated Organic Felt Used in Roofing and Waterproofing	1404.2, 1505.2, 1507.2.3, 1507.2.8.1, 1507.3.3, 1507.4.5 1507.5.3, 1507.6.3, 1507.6.3.1, 1507.7.3, Table 1507.8, 1507.8.3, 1507.9.3, 1507.9.5, Table 1507.10.2, 1507.17.3, 1507.17.4.1
D 227/D 227M—03(2011)E1	Specification for Coal-tar-saturated Organic Felt Used in Roofing and Waterproofing	Table 1507.10.2
D 312—00 (2006)	Specification for Asphalt Used in Roofing	Table 1507.10.2
D 422—63 (2007)	Test Method for Particle-size Analysis of Soils	1803.5.3
D 448—08	Standard Classification for Sizes of Aggregate for Road and Bridge Construction	1507.12.3, 1507.13.3
D 450—07	Specification for Coal-tar Pitch Used in Roofing, Dampproofing and Waterproofing	Table 1507.10.2
D 635—10	Test Method for Rate of Burning and/or Extent and Time of Burning of Plastics in a Horizontal Position	2606.4
D 1143/D 1143M—07e1	Test Method for Piles Under Static Axial Compressive Load	1810.3.3.1.2
D 1227—95 (2007)	Specification for Emulsified Asphalt Used as a Protective Coating for Roofing	Table 1507.10.2, 1507.15.2
D 1557—12	Test Method for Laboratory Compaction Characteristics of Soil Using Modified Effort [56,000 ft-lb/ft^3 (2,700 KN m/m^3)]	1705.6, 1804.5
D 1863/D 1863M—05(2011)E1	Specification for Mineral Aggregate Used on Built-up Roofs	Table 1507.10.2
D 1929—12	Test Method for Determining Ignition Temperature of Plastics	402.6.4.4, 406.7.2, 1407.11.2.1, 1407.11.3.3, 1407.11.4.2, 2606.4

ASTM—continued

D 1970/D 1970M—2013	Specification for Self-adhering Polymer Modified Bituminous Sheet Materials Used as Steep Roof Underlayment for Ice Dam Protection	1507.2.4, 1502.2.8.1, 1507.2.9.2, 1507.3.3.3 1507.3.9, 1507.4.5, 1507.5.3.1, 1507.5.7, 1507.6.3.1, 1507.7.3.1, 1507.8.3.1, 1507.8.8, 1507.9.3.1, 1507.9.9, 1507.17.4.1
D 2178—04	Specification for Asphalt Glass Felt Used in Roofing and Waterproofing	Table 1507.10.2
D 2487—2011	Practice for Classification of Soils for Engineering Purposes (Unified Soil Classification System)	Table 1610.1, 1803.5.1
D 2626/D 2626M—04(2012)E1	Specification for Asphalt Saturated and Coated Organic Felt Base Sheet Used in Roofing	1507.3.3 Table 1507.10.2
D 2822/D 2822M-05(2011)E1	Specification for Asphalt Roof Cement, Asbestos Containing	Table 1507.10.2
D 2823/D 2823M—05(2011)E1	Specification for Asphalt Roof Coatings, Asbestos Containing	Table 1507.10.2
D 2824—06(2012)E1	Standard Specification for Aluminum-Pigmented Asphalt Roof Coating, Nonfibered, Asbestos Fibered and Fibered without Asbestos	Table 1507.10.2
D 2843—10	Test for Density of Smoke from the Burning or Decomposition of Plastics	2606.4
D 2859—06(2011)	Standard Test Method for Ignition Characteristics of Finished Textile Floor Covering Materials	804.4.1
D 2898—10	Test Methods for Accelerated Weathering of Fire-retardant-treated Wood for Fire Testing	1505.1, 2303.2.4, 2303.2.6
D 3019—08	Specification for Lap Cement Used with Asphalt Roll Roofing, Nonfibered, Asbestos Fibered and Nonasbestos Fibered	Table 1507.10.2
D 3161/D 3161M—13	Test Method for a Wind Resistance of Asphalt Shingles (Fan Induced Method)	1504.1.1, Table 1504.1.1, 1507.17.8
D 3200—74 (2012)	Standard Specification and Test Method for Establishing Recommended Design Stresses for Round Timber Construction Poles	2303.1.12
D 3201—2013	Test Method for Hygroscopic Properties of Fire-retardant-treated Wood and Wood-based Products	2303.2.7
D 3278—1996 (2011)	Test Methods for Flash Point of Liquids by Small Scale Closed-cup Apparatus	202
D 3462/D 3462M—10A	Specification for Asphalt Shingles Made from Glass Felt and Surfaced with Mineral Granules	1507.2.5
D 3468—99 (2006) e01	Specification for Liquid-applied Neoprene and Chlorosulfonated Polyethylene Used in Roofing and Waterproofing	1507.15.2
D 3679—11	Specification for Rigid Poly (Vinyl Chloride) (PVC) Siding	1404.9, 1405.14
D 3689—2013E1	Test Methods for Deep Foundations Under Static Axial Tensile Load	1810.3.3.1.5
D 3737—2012	Practice for Establishing Allowable Properties for Structural Glued Laminated Timber (Glulam)	2303.1.3
D 3746—85 (2008)	Test Method for Impact Resistance of Bituminous Roofing Systems	1504.7
D 3747—79 (2007)	Specification for Emulsified Asphalt Adhesive for Adhering Roof Insulation	Table 1507.10.2
D 3909/D 3909M—97b (2012)e1	Specification for Asphalt Roll Roofing (Glass Felt) Surfaced with Mineral Granules	1507.2.9.2, 1507.6.5, Table 1507.10.2
D 3957—09	Standard Practices for Establishing Stress Grades for Structural Members Used in Log Buildings	2303.1.11
D 4022/D 4022M—2007(2012)E1	Specification for Coal Tar Roof Cement, Asbestos Containing	Table 1507.10.2
D 4272—09	Test Method for Total Energy Impact of Plastic Films by Dart Drop	1504.7
D 4318—10	Test Methods for Liquid Limit, Plastic Limit and Plasticity Index of Soils	1803.5.3
D 4434/D 4434M—12	Specification for Poly (Vinyl Chloride) Sheet Roofing	1507.13.2
D 4479/D 4479M—07(2012)E1	Specification for Asphalt Roof Coatings-Asbestos-free	Table 1507.10.2
D 4586/D 4586M—07(2012)E1	Specification for Asphalt Roof Cement-Asbestos-free	Table 1507.10.2
D 4601/D 4601M—04(2012)E1	Specification for Asphalt-coated Glass Fiber Base Sheet Used in Roofing	Table 1507.10.2
D 4637/D 4637M—13	Specification for EPDM Sheet Used in Single-ply Roof Membrane	1507.12.2
D 4829—11	Test Method for Expansion Index of Soils	1803.5.3
D 4869/D 4869M—05(2011)e01	Specification for Asphalt-saturated (Organic Felt) Underlayment Used in Steep Slope Roofing	1507.2.3, 1507.2.8.1, 1507.4.5, 1507.5.3, 1507.5.3.1, 1507.6.3, 1507.7.3, 1507.7.3.1, 1507.8.3, 1507.8.3.1, 1507.9.3, 1507.9.3.1, 1507.17.3, 1507.17.4.1
D 4897/D 4897M—01(2009)	Specification for Asphalt-coated Glass Fiber Venting Base Sheet Used in Roofing	Table 1507.10.2
D 4945—12	Test Method for High-strain Dynamic Testing of Piles	1810.3.3.1.2
D 4990—97a (2005) e01	Specification for Coal Tar Glass Felt Used in Roofing and Waterproofing	Table 1507.10.2
D 5019—07a	Specification for Reinforced Nonvulcanized Polymeric Sheet Used in Roofing Membrane	1507.12.2

ASTM—continued

D 5055—13	Specification for Establishing and Monitoring Structural Capacities of Prefabricated Wood I-joists	2303.1.2
D 5456—13	Specification for Evaluation of Structural Composite Lumber Products	2303.1.10
D 5516—09	Test Method of Evaluating the Flexural Properties of Fire-retardant-treated Softwood Plywood Exposed to the Elevated Temperatures	2303.2.5.1
D 5643/D 5643M—06(2012)E1	Specification for Coal Tar Roof Cement, Asbestos-free	Table 1507.10.2
D 5664—10	Test Methods for Evaluating the Effects of Fire-retardant Treatment and Elevated Temperatures on Strength Properties of Fire-retardant-treated Lumber	2303.2.5.2
D 5665—99a (2006)	Specification for Thermoplastic Fabrics Used in Cold-applied Roofing and Waterproofing	Table 1507.10.2
D 5726—98 (2005)	Specification for Thermoplastic Fabrics Used in Hot-applied Roofing and Waterproofing	Table 1507.10.2
D 6083—05e01	Specification for Liquid Applied Acrylic Coating Used in Roofing	Table 1507.10.2, Table 1507.14.3, 1507.15.2
D 6162—2000A (2008)	Specification for Styrene-butadiene-styrene (SBS) Modified Bituminous Sheet Materials Using a Combination of Polyester and Glass Fiber Reinforcements	1507.11.2
D 6163—00 (2008)	Specification for Styrene-butadiene-styrene (SBS) Modified Bituminous Sheet Materials Using Glass Fiber Reinforcements	1507.11.2
D 6164/D 6164M—11	Specification for Styrene-butadiene-styrene (SBS) Modified Bituminous Sheet Metal Materials Using Polyester Reinforcements	1507.11.2
D 6222/D 6222M—11	Specification for Atactic Polypropylene (APP) Modified Bituminous Sheet Materials Using Polyester Reinforcements	1507.11.2
D 6223/D 6223M—02(2011)E1	Specification for Atactic Polypropylene (APP) Modified Bituminous Sheet Materials Using a Combination of Polyester and Glass Fiber Reinforcements	1507.11.2
D 6298—05e1	Specification for Fiberglass Reinforced Styrene-butadiene-styrene (SBS) Modified Bituminous Sheets with a Factory Applied Metal Surface	1507.11.2
D 6305—08	Practice for Calculating Bending Strength Design Adjustment Factors for Fire-retardant-treated Plywood Roof Sheathing	2303.2.5.1
D 6380—03 (2009)	Standard Specification for Asphalt Roll Roofing (Organic) Felt	1507.2.9.2, 1507.3.3, 1507.6.5
D 6509/D 6509M—09	Standard Specification for Atactic Polypropylene (APP) Modified Bituminous base Sheet Materials Using Glass Fiber Reinforcements	1507.11.2
D 6694—08	Standard Specification for Liquid-applied Silicone Coating Used in Spray Polyurethane Foam Roofing Systems	Table 1507.14.3, 1507.15.2
D 6754/D 6745M—10	Standard Specification for Ketone Ethylene Ester Based Sheet Roofing	1507.13.2
D 6757—2013	Standard Specification for Underlayment for Use with Steep Slope Roofing	1507.2.3, 1507.17.3, 1507.17.4.1
D 6841—08	Standard Practice for Calculating Design Value Treatment Adjustment Factors for Fire-retardant-treated Lumber	2303.2.5.2
D 6878/D 6878M—11a	Standard Specification for Thermoplastic Polyolefin Based Sheet Roofing	1507.13.2
D 6947—07	Standard Specification for Liquid Applied Moisture Cured Polyurethane Coating Used in Spray Polyurethane Foam Roofing System	Table 1507.14.3, 1507.15.2
D 7032—10a	Standard Specification for Establishing Performance Ratings for Wood, Plastic Composite Deck Boards and Guardrail Systems (Guards or Rails)	2612.2.1, 2612.4, 2612.5.1
D 7147—05	Specification for Testing and Establishing Allowable Loads of Joist Hangers	2303.5, 2304.10.3
D 7158/D 7158M—11	Standard Test Method for Wind Resistance of Sealed Asphalt Shingles (Uplift Force/Uplift Resistance Method)	1504.1.1, Table 1504.1.1
D 7254—07	Standard Specification for polypropylene (PP) siding	1404.12
D 7655—12	Standard Classification for Size of Aggregate Used as Ballast for Roof Membrane Systems	1507.12.3, 1507.13.3
D 7672—2012	Standard Specification for Evaluating Structural Capacities of Rim Board Products and Assemblies	2303.1.13
E 84—2013A	Test Methods for Surface Burning Characteristics of Building Materials	202, 402.6.4.4, 406.7.2, 703.5.2, 720.1, 720.4, 803.1.1, 803.1.4, 803.10, 803.11, 806.7, 1404.12.1, 1407.9, 1407.10.1, 1409.9, 1409.10.1, 1510.6.2, 1510.6.3, 2303.2, 2603.3, 2603.4.1.13, 2606.3.5.4, 2603.7.1, 2603.7.2, 2603.7.3, 2604.2.4, 2606.4, 2612.3, 2614.3, 3105.4
E 90—09	Test Method for Laboratory Measurement of Airborne Sound Transmission Loss of Building Partitions and Elements	1207.2, 1207.2.1
E 96/E 96M—2013	Test Method for Water Vapor Transmission of Materials	202
E 108—2011	Test Methods for Fire Tests of Roof Coverings	1505.1, 2603.6, 2610.2, 2610.3
E 119—2012A	Standard Test Methods for Fire Tests of Building Construction and Materials	703.2, 703.2.1, 703.2.3, 703.3, 703.4, 703.6, 704.12, 705.7, 705.8.5, 711.3.2, 714.3.1, 714.4.1, 715.1, 716.2, Table 716.3, 716.5.6, 716.5.8.1.1, Table 716.6, 716.6.7.1, 717.5.2, 717.5.3, 717.6.1, 716.6.2.1, Table 721.1(1), 1409.10.2, 2103.1, 2603.5.1
E 136—2012	Test Method for Behavior of Materials in a Vertical Tube Furnace at 750°C	703.5.1

ASTM—continued

E 283—04	Standard Test Method for Determining Rate of Air Leakage Through Exterior Windows Curtain Walls, and Doors Under Specified Pressure Difference Across the Specimen 202
E 330—02	Test Method for Structural Performance of Exterior Windows, Curtain Walls and Doors by Uniform Static Air Pressure Difference 1409.10.2, 1709.5.2
E 331—00 (2009)	Test Method for Water Penetration of Exterior Windows, Skylights, Doors and Curtain Walls by Uniform Static Air Pressure Difference 1403.2
E 492—09	Test Method for Laboratory Measurement of Impact Sound Transmission Through Floor-ceiling Assemblies Using the Tapping Machine 1207.3
E 605—93 (2011)	Test Method for Thickness and Density of Sprayed Fire-resistive Material (SFRM) Applied to Structural Members 1705.14.4.1, 1705.14.4.2, 1705.14.4.5, 1705.14.5
E 681—2009	Test Methods for Concentration Limits of Flammability of Chemical Vapors and Gases 202
E 736—00 (2011)	Test Method for Cohesion/Adhesion of Sprayed Fire-resistive Materials Applied to Structural Members 704.13.2, 1705.14.6
E 814—2013	Test Method of Fire Tests of Through-penetration Firestops 202, 714.3.1.2, 714.3.2, 7143.4.1.1.2
E 970—2010	Test Method for Critical Radiant Flux of Exposed Attic Floor Insulation Using a Radiant Heat Energy Source 720.3.1
E 1300—12AE1	Practice for Determining Load Resistance of Glass in Buildings 2404.1, 2404.2, 2404.3.1, 2404.3.2, 2404.3.3, 2404.3.4, 2404.3.5
E 1354—2013	Standard Test Method for Heat and Visible Smoke Release Rates for Materials and Products Using an Oxygen Consumption Calorimeter 424.2
E 1592—05(2012)	Test Method for Structural Performance of Sheet Metal Roof and Siding Systems by Uniform Static Air Pressure Difference 1504.3.2
E 1602—02(2010)E1	Guide for Construction of Solid Fuel-burning Masonry Heaters 2112.2
E 1886—05	Test Method for Performance of Exterior Windows, Curtain Walls, Doors and Storm Shutters Impacted by Missiles and Exposed to Cyclic Pressure Differentials 1609.1.2
E 1966—07A(2011)	Test Method for Fire-resistant Joint Systems 202, 715.3
E 1996—2012A	Specification for Performance of Exterior Windows, Curtain Walls, Doors and Impact Protective Systems Impacted by Windborne Debris in Hurricanes . . . 1609.1.2, 1609.1.2.2
E 2072—10	Standard Specification for Photoluminescent (Phosphorescent) Safety Markings 1025.3
E 2174—10AE1	Standard Practice for On-Site Inspection of Installed Fire Stops 1705.17.1
E 2178—13	Standard Test Method for Air Permeance of Building Materials 202
E 2273—03(2011)	Standard Test Method for Determining the Drainage Efficiency of Exterior Insulation and Finish Systems (EIFS) Clad Wall Assemblies 1408.4.1
E 2307—2010	Standard Test Method for Determining Fire Resistance of a Perimeter Joint System Between an Exterior Wall Assembly and Floor Assembly Using the Intermediate-scale, Multistory Test Apparatus 715.4
E 2393—10A	Standard Practice for On-Site Inspection of Installed Fire Resistive Joint Systems and Perimeter Fire Barrier 1705.17.2
E 2397—11	Standard Practice for Determination of Dead Loads and Live Loads Associated with Green Roof Systems 1607.12.3.1
E 2404—2013E1	Standard Practice for Specimen Preparation and Mounting of Textile, Paper or Vinyl Wall or Ceiling Coverings to Assess Surface Burning Characteristics 803.1.4
E 2556—10	Standard Specification for Vapor Permeable Flexible Sheet Water-Resistive Barriers Intended for Mechanical Attachment 1404.2, 2510.6
E 2568—09e1	Standard Specification for PB Exterior Insulation and Finish Systems 1408.2
E 2570—07	Standard Test Method for Evaluating Water-resistive Barrier (WRB) Coatings Used Under Exterior Insulation and Finish Systems (EIFS) for EIFS with Drainage 1408.4.1.1, 1705.16.1
E 2573—12	Standard Practice for Specimen Preparation and Mounting of Site-fabricated Stretch Systems to Assess Surface Burning Characteristics 803.13
E 2599—11	Standard Practice for Specimen Preparation and Mounting of Reflective Insulation Materials and Vinyl Stretch Ceiling Materials for Building Applications to Assess Surface Burning Characteristics 2614.3
E 2634—11	Standard Specification for Flat Wall Insulating Concrete Form (ICF) Systems 1903.4
E 2751—11	Standard Practice for Design and Performance of Supported Glass Walkways 2409.1
F 547—(2012)	Terminology of Nails for Use with Wood and Wood-based Materials . . . . . Table 2506.2
F 1346—91 (2010)	Performance Specification for Safety Covers and Labeling Requirements for All Covers for Swimming Pools, Spas and Hot Tubs 3109.4, 3109.4.1.8
F 1667—11AE1	Specification for Driven Fasteners: Nails, Spikes and Staples . . . . . Table 721.1(2), Table 721.1(3), 1507.2.6, 1507.17.5, 2303.6, Table 2506.2
F 2006—00 (2005) 10	Standard/Safety Specification for Window Fall Prevention Devices for Nonemergency Escape (Egress) and Rescue (Ingress) Windows 1015.8
F 2090—10	Specification for Window Fall Prevention Devices with Emergency Escape (Egress) Release Mechanisms 1015.8, 1015.8.1
F 2200—2013	Standard Specification for Automated Vehicular Gate Construction 3110.3

ASTM—continued

G 152—06	Practice for Operating Open Flame Carbon Arc Light Apparatus for Exposure of Nonmetallic Materials	1504.6
G 154—06	Practice for Operating Fluorescent Light Apparatus for UV Exposure of Nonmetallic Materials	1504.6
G 155—05a	Practice for Operating Xenon Arc Light Apparatus for Exposure of Nonmetallic Materials	1504.6

AWC

American Wood Council
222 Catoctin SE, Suite 201
Leesburg, VA 20175

Standard reference number	Title	Referenced in code section number
AWC WCD No. 4—2003	Wood Construction Data—Plank and Beam Framing for Residential Buildings	2306.1.2
AWC WFCM—2015	Wood Frame Construction Manual for One- and Two-Family Dwellings	1609.1.1, 1609.1.1.1, 2301.2, 2308.2.4, 2309.1
ANSI/AWC NDS—2015	National Design Specification (NDS) for Wood Construction with 2012 Supplement	202, 722.1, 722.6.3.2, Table 1604.3, 1711.1.1, 1711.1.2.1, 1809.12, 1810.3.2.4, Table 1810.3.2.6, 1905.1.8, 2302.1, 2304.13, 2306.1, 2306.2, Table 2306.2(1), Table 2306.2(2), Table 2306.3(1), Table 2306.3(2), 2307.1
AWC STJR—2015	Span Tables for Joists and Rafters	2306.1.1, 2308.4.2.1, 2308.7.1, 2308.7.2
ANSI/AWC PWF—2015	Permanent Wood Foundation Design Specification	1805.2, 1807.1.4, 2304.10.5.2
AWC SDPWS—2015	Special Design Provisions for Wind and Seismic	202, 2305.1, 2305.2, 2305.3, 2306.2, 2306.3, Table 2306.3(1), Table 2306.3(3), 2307.1

AWCI

Association of the Wall and Ceiling Industry
513 West Broad Street, Suite 210
Falls Church, VA 22046

Standard reference number	Title	Referenced in code section number
12-B—04	Technical Manual 12-B Standard Practice for the Testing and Inspection of Field Applied Thin Film Intumescent Fire-resistive Materials; an Annotated Guide, Second Edition	1705.15

AWPA

American Wood Protection Association
P.O. Box 361784
Birmingham, AL 35236-1784

Standard reference number	Title	Referenced in code section number
C1—03	All Timber Products-Preservative Treatment by Pressure Processes	1505.6
M4—11	Standard for the Care of Preservative-treated Wood Products	1810.3.2.4.1, 2303.1.9
U1—14	USE CATEGORY SYSTEM: User Specification for Treated Wood Except Section 6, Commodity Specification H	1403.6, Table 1507.9.6, 1807.1.4, 1807.3.1, 1809.12, 1810.3.2.4.1, 2303.1.9, 2304.12.1, 2304.12.2, 2304.12.3, 2304.2.4, 2304.12.5

AWS

American Welding Society
8669 NW 36 Street, #130
Doral, FL 33166

Standard reference number	Title	Referenced in code section number
D1.4/D1.4M—2011	Structural Welding Code-Reinforcing Steel Including Metal Inserts and Connections In Reinforced Concrete Construction	1704.5, 1705.3.1, Table 1705.3, 2107.4

BHMA

Builders Hardware Manufacturers' Association
355 Lexington Avenue, 17th Floor
New York, NY 10017-6603

Standard reference number	Title	Referenced in code section number
A 156.10—2011	Power Operated Pedestrian Doors	1010.1.4.2
A 156.19—2013	Standard for Power Assist and Low Energy Operated Doors	1010.1.4.2
A 156.27—11	Power and Manual Operated Revolving Pedestrian Doors	1010.1.4.1

CEN

European Committee for Standardization (CEN)
Central Secretariat
Rue de Stassart 36
B-10 50 Brussels

Standard reference number	Title	Referenced in code section number
EN 1081—98	Resilient Floor Coverings—Determination of the Electrical Resistance	406.7.1
BS EN 15250—2007	Slow Heat Release Appliances Fired By Solid Fuel Requirements and Test Methods	2112.2, 2112.5

CGSB

Canadian General Standards Board
Place du Portage 111, 6B1
11 Laurier Street
Gatineau, Quebec, Canada KIA 1G6

Standard reference number	Title	Referenced in code section number
37-GP-52M (1984)	Roofing and Waterproofing Membrane, Sheet Applied, Elastomeric	1504.7, 1507.12.2
37-GP-56M (1980)	Membrane, Modified, Bituminous, Prefabricated and Reinforced for Roofing—with December 1985 Amendment	1507.11.2
CAN/CGSB 37.54—95	Polyvinyl Chloride Roofing and Waterproofing Membrane	1507.13.2

CPA

Composite Panel Association
19465 Deerfield Avenue, Suite 306
Leesburg, VA 20176

Standard reference number	Title	Referenced in code section number
ANSI A135.4—2012	Basic Hardboard	1404.3.1, 2303.1.7
ANSI A135.5—2012	Prefinished Hardboard Paneling	2303.1.7, 2304.7
ANSI A135.6—2012	Engineered Wood Siding	1404.3.2, 2303.1.7
A208.1—09	Particleboard	2303.1 8, 2303.1. 8.1

CPSC

Consumer Product Safety Commission
4330 East West Highway
Bethesda, MD 20814-4408

Standard reference number	Title	Referenced in code section number
16 CFR Part 1201 (2002)	Safety Standard for Architectural Glazing Material	2406.2, Table 2406.2(1), 2406.3.1, 2407.1, 2407.1.4.1, 2408.2.1, 2408.3, 2409.2, 2409.3.1, 2409.4.1
16 CFR Part 1209 (2002)	Interim Safety Standard for Cellulose Insulation	720.6
16 CFR Part 1404 (2002)	Cellulose Insulation	720.6
16 CFR Part 1500 (2009)	Hazardous Substances and Articles; Administration and Enforcement Regulations	202
	CPSC—continued	
16 CFR Part 1500.44(2009)	Method for Determining Extremely Flammable and Flammable Solids	202
16 CFR Part 1507 (2002)	Fireworks Devices	202
16 CFR Part 1630 (2007)	Standard for the Surface Flammability of Carpets and Rugs	804.4.1

CSA

Canadian Standards Association
8501 East Pleasant Valley
Cleveland, OH 44131-5516

Standard reference number	Title	Referenced in code section number
AAMA/WDMA/CSA 101/I.S.2/A440—11	Specifications for Windows, Doors and Unit Skylights	1709.5.1, 2405.5

CSSB

Cedar Shake and Shingle Bureau
P. O. Box 1178
Sumas, WA 98295-1178

Standard reference number	Title	Referenced in code section number
CSSB—97	Grading and Packing Rules for Western Red Cedar Shakes and Western Red Shingles of the Cedar Shake and Shingle Bureau	Table 1507.8.5, Table 1507.9.6

DASMA

Door and Access Systems Manufacturers Association International
1300 Summer Avenue
Cleveland, OH 44115-2851

Standard reference number	Title	Referenced in code section number
ANSI/DASMA 107—1997 (R2012)	Room Fire Test Standard for Garage Doors Using Foam Plastic Insulation	2603.4.1.9
108—12	Standard Method for Testing Sectional Garage Doors and Rolling Doors: Determination of Structural Performance Under Uniform Static Air Pressure Difference	1709.5.2
115—12	Standard Method for Testing Sectional Garage Doors and Rolling Doors: Determination of Structural Performance Under Missile Impact and Cyclic Wind Pressure	1609.1.2.3

DOC

U.S. Department of Commerce
National Institute of Standards and Technology
1401 Constitution Avenue NW
Washington, DC 20230

Standard reference number	Title	Referenced in code section number
PS-1—09	Structural Plywood	2303.1.5, 2304.7, Table 2304.7(4), Table 2304.7(5), Table 2306.2(1), Table 2306.2(2)
PS-2—10	Performance Standard for Wood-based Structural-use Panels	2303.1.5, 2304.7, Table 2304.7(5), Table 2306.2(1), Table 2306.2(2)
PS 20—05	American Softwood Lumber Standard	202, 1810.3.2.4, 2303.1.1

DOL

U.S. Department of Labor
Frances Perkins Building
200 Constitution Avenue NW
Washington, DC 20210

Standard reference number	Title	Referenced in code section number
29 CFR Part 1910.1000 (2009)	Air Contaminants	202

DOTn

U.S. Department of Transportation
c/o Superintendent of Documents
East Building, 2nd floor
Washington, DC 20590

Standard reference number	Title	Referenced in code section number
49 CFR Parts 100—185 2005	Hazardous Materials Regulations	202
49 CFR Parts 173.137 (2009)	Shippers—General Requirements for Shipments and Packaging—Class 8—Assignment of Packing Group	202
49 CFR—1998	Specification of Transportation of Explosive and Other Dangerous Articles, UN 0335, UN 0336 Shipping Containers	202

FEMA

Federal Emergency Management Agency
Federal Center Plaza
500 C Street S.W.
Washington, DC 20472

Standard reference number	Title	Referenced in code section number
FEMA-TB-11—01	Crawlspace Construction for Buildings Located in Special Flood Hazard Areas	1805.1.2.1

FM

Factory Mutual Global Research
Standards Laboratories Department
1301 Atwood Avenue, P.O. Box 7500
Johnston, RI 02919

Standard reference number	Title	Referenced in code section number
4430 (2012)	Approval Standard for Heat and Smoke Vents	910.3.1
4470 (2012)	Approval Standard for Single-Ply Polymer-Modified Bitumen Sheet, Built-Up Roof (BUR) And Liquid Applied Roof Assemblies for use in Class 1 and Noncombustible Roof Deck Construction	1504.7
4474 (2011)	American National Standard for Evaluating the Simulated Wind Uplift Resistance of Roof Assemblies Using Static Positive and/or Negative Differential Pressures	1504.3.1, 1504.3.2
4880-2010	Approval Standard for Class 1 Fire Rating of Insulated Wall or Wall and Roof/Ceiling Panels, Interior Finish Materials or Coatings and Exterior Wall Systems	2603.4, 2603.9

GA

Gypsum Association
6525 Belcrest Road, Suite 480
Hyattsville, MD 20782

Standard reference number	Title	Referenced in code section number
GA 216—13	Application and Finishing of Gypsum Panel Products	Table 2508.1, 2509.2
GA 600—09	Fire-Resistance Design Manual, 20th Edition	Table 721.1(1), Table 721.1(2), Table 721.1(3)

HPVA

Hardwood Plywood Veneer Association
1825 Michael Faraday Drive
Reston, VA 20190

Standard reference number	Title	Referenced in code section number
HP-1—2013	Standard for Hardwood and Decorative Plywood	2303.3, 2304.7

ICC

International Code Council, Inc.
500 New Jersey Ave, NW
6th Floor
Washington, DC 20001

Standard reference number	Title	Referenced in code section number
ICC A117.1—09	Accessible and Usable Buildings and Facilities	202, 907.5.2.3.3, 1009.8.2, 1009.9, 1009.11, 1010.1.9.7, 1012.1, 1012.6.5, 1012.10, 1013.4, 1023.9, 1101.2, 1111.2, 1111.3, 1111.4, 1111.4.2
ICC 300—12	ICC Standard on Bleachers, Folding and Telescopic Seating and Grandstands	1029.1.1 Table 1607.1
ICC 400—12	Standard on Design and Construction of Log Structures	2301.2
ICC 500—14	ICC/NSSA Standard on the Design and Construction of Storm Shelters	202, 423.1, 423.3, 423.4
ICC 600—14	Standard for Residential Construction in High-wind Regions	1609.1.1, 1609.1.1.1, 2308.2.1
IEBC—15	International Existing Building Code®	101.4.7, 116.5, 201.3
IECC—15	International Energy Conservation Code®	101.4.6, 201.3, 202, 1203.1, 1301.1.1, 1405.3

ICC—continued

IFC—15	International Fire Code®	101.4.5, 102.6, 201.3, 202, 307.1, Table 307.1(1), Table 307.1(2), 307.1.1, 307.1.2, 403.4.5, 404.2, 406.7, 406.8, 407.2.6, 407.4, 410.3.6, 411.1, 412.1, 412.6.1, 413.1, 414.1.1, 414.1.2, 414.1.2.1, 414.2, 414.2.5, Table 414.2.5(1), Table 414.2.5(2), 414.3, 414.5, 414.5.1, Table 414.5.1, 414.5.2, 414.5.3, 414.5.4, 414.6, 415.1, 415.6, 415.6.1, 415.6.1.1, 415.6.1.4, Table 415.6.2, 415.7.3, 415.8.2, 415.9, 415.9.1, 415.9.1.3, 415.9.1.4, 415.9.1.6, 415.9.1.7, 415.9.1.8, 415.9.2, 415.9.3, 415.10, 415.11, 415.11.1.7, 415.11.4, 415.11.7.2, 415.11.9.3, 415.11.10.1, 416.1, 416.4, 421.1, 422.3.1, 426.1.4, Table 504.3, Table 504.4, Table 506.2, 507.4, 507.8.1.1.1, 507.8.1.1.2, 507.8.1.1.3, 705.8.1, 707.1, 901.2, 901.3, 901.5, 901.6.2, 901.6.3, 903.1.1, 903.2.7.1, 903.2.11.6, 903.2.12, 903.5, 904.2.1, 904.12.3, 905.1, 905.3.6, 906.1, 907.1.8, 907.2.5, 907.2.13.2, 907.2.15, 907.2.16, 907.6.5, 907.8, 909.20, 910.2.2, 1001.3, 1001.4, 1010.1.9.6, 1203.5.2, 1203.6, 1507.16, 1512.1, Table 1604.5, 2603.4.1.12, 2702.1, 2702.1.2, 2702.2.3, 2702.2.8, 2702.2.9, 2702.2.11, 2702.2.12, 2702.2.13, 2702.4, 3003.3, 3008.1.2, 3102.1, 3103.1, 3111.1, 3111.1.1, 3302.3, 3303.7, 3309.2
IFGC—15	International Fuel Gas Code®	101.4.1, 201.3, Table 307.1(1), 415.9.2, 2113.11.1.2, 2113.15, 2801.1
IMC—15	International Mechanical Code®	101.4.2, 201.3, 307.1.1, Table 307.1(1), 406.6.2, 406.8.2, 406.8.4, 409.3, 412.6.6, 414.1.2, 414.3, 415.8.1.4, 415.8.2, 415.8.2.7, 415.8.3, 415.8.4, 415.10.11, 415.10.11.1, 416.2.2, 413.3, 416.3, 417.1, 419.8, 421.5, 603.1, 603.1.1, 603.1.2, 712.1.6, 717.2.2, 717.5.3, 717.5.4, 717.6.1, 717.6.2, 717.6.3, 718.5, 720.1, 720.7, 903.2.11.4, 904.2.1, 904.11, 907.3.1, 908.6, 909.1, 909.10.2, 909.13.1, 1006.2.2.3, 1011.6, 1020.5.1, 1203.1, 1203.2.1, 1203.5.2, 1203.5.2.1, 1203.6, 1209.3, 2801.1
IPC—15	International Plumbing Code®	101.4.3, 201.3, 415.9.3, 603.1.2, 718.5, 903.3.5, 904.12.1.3, 912.6, 1206.3.3, 1503.4, 1503.4.1, 1805.4.3, 2901.1, Table 2902.1, 3305.1, A101.2
IPMC—15	International Property Maintenance Code®	101.4.4, 102.6, 103.3
IPSDC—15	International Private Sewage Disposal Code®	101.4.3, 2901.1
IRC—15	International Residential Code®	101.2, 305.2.3, 308.3.4, 308.4.2, 308.6.4, 310.1, 310.5.1, 310.5.2, 2308.1
IWUIC—15	International Wildland-Urban Interface Code®	Table 1505.1
SBCCI SSTD 11—97	Test Standard for Determining Wind Resistance of Concrete or Clay Roof Tiles	1504.2.1.1, 1504.2.1.2

ISO

International Organization for Standardization
ISO Central Secretariat
1 ch, de la Voie-Creuse, Case Postale 56
CH-1211 Geneva 20, Switzerland

Standard reference number	Title	Referenced in code section number
ISO 8115—86	Cotton Bales—Dimensions and Density	Table 307.1(1), Table 415.11.1.1.1
ISO 8336—09	Fiber-Cement Flat Sheets - Product Specification and Test Methods	1404.10, 1405.16.1, 1405.16.2, Table 2509.2

MHI

Material Handling Institute
8720 Red Oak Blvd. Suite 201
Charlotte, NC 28217

Standard reference number	Title	Referenced in code section number
ANSI MH29.1—08	Safety Requirements for Industrial Scissors Lifts	3001.2

NAAMM

National Association of Architectural Metal Manufacturers
800 Roosevelt Road, Bldg. C, Suite 312
Glen Ellyn, IL 60137

Standard reference number	Title	Referenced in code section number
FP 1001—07	Guide Specifications for Design of Metal Flag Poles	1609.1.1

NCMA

National Concrete Masonry Association
13750 Sunrise Valley
Herndon, VA 22071-4662

Standard reference number	Title	Referenced in code section number
TEK 5—84 (1996)	Details for Concrete Masonry Fire Walls	Table 721.1(2)

NFPA

National Fire Protection Association
1 Batterymarch Park
Quincy, MA 02169-7471

Standard reference number	Title	Referenced in code section number
10—13	Standard for Portable Fire Extinguishers	906.2, 906.3.2, 906.3.4, Table 906.3(1), Table 906.3(2)
11—10	Standard for Low Expansion Foam	904.7
12—11	Standard on Carbon Dioxide Extinguishing Systems	904.8, 904.11
12A—09	Standard on Halon 1301 Fire Extinguishing Systems	904.9
13—13	Installation of Sprinkler Systems	708.2, 903.3.1.1, 903.3.2, 903.3.8.2, 903.3.8.5 904.11, 905.3.4, 907.6.4, 1019.3
13D—13	Standard for the Installation of Sprinkler Systems in One- and Two-family Dwellings and Manufactured Homes	903.3.1.3
13R—13	Standard for the Installation of Sprinkler Systems in Low Rise Residential Occupancies	903.3.1.2, 903.3.5.2, 903.4
14—13	Standard for the Installation of Standpipe and Hose System	905.2, 905.3.4, 905.4.2, 905.6.2, 905.8
16—15	Standard for the Installation of Foam-water Sprinkler and Foam-water Spray Systems	904.7, 904.11
17—13	Standard for Dry Chemical Extinguishing Systems	904.6, 904.11
17A—13	Standard for Wet Chemical Extinguishing Systems	904.5, 904.11
20—13	Standard for the Installation of Stationary Pumps for Fire Protection	913.1, 913.2.1, 913.5
30—12	Flammable and Combustible Liquids Code	415.6, 507.8.1.1.1, 507.8.1.1.2
31—11	Standard for the Installation of Oil-burning Equipment	2113.15
32—11	Standard for Dry Cleaning Plants	415.9.3
40—11	Standard for the Storage and Handling of Cellulose Nitrate Film	409.1
58—14	Liquefied Petroleum Gas Code	415.9.2
61—13	Standard for the Prevention of Fires and Dust Explosions in Agricultural and Food Product Facilities	426.1
70—14	National Electrical Code	108.3, 415.11.1.8, 904.3.1, 907.6.1, 909.12.2, 909.16.3, 1205.4.1, 2701.1, 2702.1.2, G501.4, G1001.6, H106.1, H106.2, K101, K111.1
72—13	National Fire Alarm and Signaling Code	407.4.4.3, 407.4.4.5, 407.4.4.5.1, 901.6, 903.4.1, 904.3.5, 907.2, 907.2.6, 907.2.11, 907.2.13.2, 907.3, 907.3.3, 907.3.4, 907.5.2.1.2, 907.5.2.2, 907.5.2.2.5, 907.6, 907.6.1, 907.6.2, 907.6.6, 907.7, 907.7.1, 907.7.2, 907.2.9.3, 911.1.5, 2702.2.4, 3005.5; 3007.7
80—13	Standard for Fire Doors and Other Opening Protectives	410.3.5, 509.4.2, 716.5, 716.5.7, 716.5.8.1, 716.5.9.2, 716.6, 716.6.4, 1010.1.4.3
82—14	Standard on Incinerators and Waste and Linen Handling Systems and Equipment	713.13
85—11	Boiler and Combustion System Hazards Code	415.8.1
92—15	Standard for Smoke Control Systems	909.7, 909.8
99—15	Health Care Facilities Code	407.10, 425.1
101—15	Life Safety Code	1028.6.2

NFPA—continued

105—13	Standard for Smoke Door Assemblies and Other Opening Protectives	405.4.2, 710.5.2.2, 716.5.3.1, 909.20.4.1
110—13	Standard for Emergency and Standby Power Systems	2702.1.2
111—13	Standard on Stored Electrical Energy Emergency and Standby Power Systems	2702.1.2
120—15	Standard for Fire Prevention and Control in Coal Mines	426.1
170—15	Standard for Fire Safety and Emergency Symbols	1025.2.6.1
211—13	Standard for Chimneys, Fireplaces, Vents and Solid Fuel-burning Appliances	2112.5
221—15	Standard for High Challenge Fire Walls, Fire Walls, and Fire Barrier Walls	706.2
252—12	Standard Methods of Fire Tests of Door Assemblies	715.4.2, 715.4.3, 715.4.7.3.1, Table 716.3, 716.3.1, 716.4, 716.5.1, 716.5.3, 716.5.8, 716.5.8.1.1
253—15	Standard Method of Test for Critical Radiant Flux of Floor Covering Systems Using a Radiant Heat Energy Source	406.8.3, 424.2, 804.2, 804.3
257—12	Standard for Fire Test for Window and Glass Block Assemblies	Table 716.3, 716.4, 716.5.3.2, 716.6, 716.6.1, 716.6.2, 716.6.7.3
259—13	Standard Test Method for Potential Heat of Building Materials	2603.4.1.10, 2603.5.3
265—11	Standard Methods of Fire Tests for Evaluating Room Fire Growth Contribution of Textile Wall Coverings on Full Height Panels and Walls	803.1.3, 803.1.3.1
268—12	Standard Test Method for Determining Ignitability of Exterior Wall Assemblies Using a Radiant Heat Energy Source	1406.2.1.1, 1406.2.1.1.1, 1406.2.1.1.2, 2603.5.7, D105.1
275—13	Standard Method of Fire Tests for the Evaluation of Thermal Barriers	1407.10.2, 2603.4
276—11	Standard Method of Fire Tests for Determining the Heat Release Rate of Roofing Assemblies With Combustible Above-Deck Roofing Components	1508.1, 2603.3, 2603.4.1.5
285—12	Standard Fire Test Method for the Evaluation of Fire Propagation Characteristics of Exterior Nonload-bearing Wall Assemblies Containing Combustible Components	718.2.6, 1403.5, 1407.10.4, 1409.10.4, 1510.6.2, 2603.5.5
286—15	Standard Methods of Fire Test for Evaluating Contribution of Wall and Ceiling Interior Finish to Room Fire Growth	402.6.4.4, 803.1.2, 803.1.2.1, 803.11, 2603.4, 2603.7.2, 2603.9, 2604.2.4, 2614.4
288—12	Standard Methods of Fire Tests of Horizontal Fire Door Assemblies Installed in Horizontal in Fire-resistance-rated Floor Systems	712.1.13.1
289—13	Standard Method of Fire Test for Individual Fuel Packages	402.6.2, 424.2
409—11	Standard for Aircraft Hangars	412.4.6, Table 412.4.6, 412.4.6.1, 412.6.5
418—11	Standard for Heliports	412.8.4
484—15	Standard for Combustible Metals	426.1
654—13	Standard for the Prevention of Fire & Dust Explosions from the Manufacturing, Processing and Handling of Combustible Particulate Solids	426.1
655—12	Standard for the Prevention of Sulfur Fires and Explosions	426.1
664—12	Standard for the Prevention of Fires and Explosions in Wood Processing and Woodworking Facilities	426.1
701—10	Standard Method of Fire Tests for Flame-Propagation of Textiles and Films	410.3.6, 424.2, 801.4, 806.1, 806.3, 806.4, 3102.3, 3102.3.1, 3102.6.1.1, 3105.4, D102.2.8, H106.1.1
704—12	Standard System for the Identification of the Hazards of Materials for Emergency Response	202, 415.5.2
720—15	Standard for the Installation of Carbon Monoxide (CO) Detection and Warning Equipment	9151.6.1, 915.1.6.2
750—14	Standard on Water Mist Fire Protection Systems	904.12.1.1
1124—06	Code for the Manufacture, Transportation and Storage of Fireworks and Pyrotechnic Articles	415.6.1.1
2001—15	Standard on Clean Agent Fire Extinguishing Systems	904.10

PCI

Precast Prestressed Concrete Institute
200 West Adams Street, Suite 2100
Chicago, IL 60606-6938

Standard reference number	Title	Referenced in code section number
MNL 124—11	Design for Fire Resistance of Precast Prestressed Concrete	722.2.3.1
MNL 128—01	Recommended Practice for Glass Fiber Reinforced Concrete Panels	1903.3

PTI

Post-Tensioning Institute
38800 Country Club Drive
Farmington Hills, MI 48331

Standard reference number	Title	Referenced in code section number
PTI DC—10.5-12	Standard Requirements for Design and Analysis of Shallow Concrete Foundations on Expansive Soils	1808.6.2

RMI

Rack Manufacturers Institute
8720 Red Oak Boulevard, Suite 201
Charlotte, NC 28217

Standard reference number	Title	Referenced in code section number
ANSI/MH16.1—12	Specification for Design, Testing and Utilization of Industrial Steel Storage Racks	2209.1

SBCA

Structural Building Components Association
6300 Enterprise Lane
Madison, WI 53719

Standard reference number	Title	Referenced in code section number
ANSI/FS 100-12	Standard Requirements for Wind Pressure Resistance of Foam Plastic Insulating Sheathing Used in Exterior Wall Covering Assemblies	2603.10

SDI

Steel Deck Institute
P. O. Box 426
Glenshaw, PA 15116

Standard reference number	Title	Referenced in code section number
ANSI/NC1.0—10	Standard for Noncomposite Steel Floor Deck	2210.1.1.1
ANSI/RD1.0—10	Standard for Steel Roof Deck	2210.1.1.2
SDI-C—2011	Standard for Composite Steel Floor Deck Slabs	2210.1.1.3
SDI-QA/QC—2011	Standard for Quality Control and Quality Assurance for Installation of Steel Deck	1705.2.2

SJI

Steel Joist Institute
1173B London Links Drive
Forest, VA 24551

Standard reference number	Title	Referenced in code section number
CJ—10	Standard Specification for Composite Steel Joists, CJ-series	1604.3.3, 2203.2, 2207.1
JG—10	Standard Specification for Joist Girders	1604.3.3, 2203.2, 2207.1
K—10	Standard Specification for Open Web Steel Joists, K-series	1604.3.3, 2203.2, 2207.1
LH/DLH—10	Standard Specification for Longspan Steel Joists, LH-series and Deep Longspan Steel Joists, DLH-series	1604.3.3, 2203.2, 2207.1

SPRI

Single-Ply Roofing Institute
411 Waverly Oaks Road, Suite 331B
Waltham, MA 02452

Standard reference number	Title	Referenced in code section number
ANSI/SPRI/ FM4435-ES-1—11	Wind Design Standard for Edge Systems Used with Low Slope Roofing Systems	1504.5
ANSI/SPRI RP-4—13	Wind Design Guide for Ballasted Single-ply Roofing Systems	1504.4
ANSI/SPRI VF1—10	External Fire Design Standard for Vegetative Roofs	1505.10

TIA

Telecommunications Industry Association
1320 N. Courthouse Road
Arlington, VA 22201-3834

Standard reference number	Title	Referenced in code section number
222-G—05	Structural Standards for Antenna Supporting Structures and Antennas, including—Addendum 1, 222-G-1, Dated 2007, Addendum 2, 222-G-2 Dated 2009 Addendum 3, 222-3 dated 2013 and Addendum 4, 222-G-4 dated 2014	1609.1.1, 3108.1, 3108.2

TMS

The Masonry Society
105 South Sunset Street, Suite Q
Longmont, CO 80501

Standard reference number	Title	Referenced in code section number
216—2013	Standard Method for Determining Fire Resistance of Concrete and Masonry Construction Assemblies	Table 721.1(2), 722.1
302—2012	Standard Method for Determining the Sound Transmission Class Rating for Masonry Walls	1207.2.1
402—2013	Building Code for Masonry Structures	1405.6, 1405.6.1, 1405.6.2, 1405.10, 1604.3.4, 1705.4, 1705.4.1, 1807.1.6.3, 1807.1.6.3.2, 1808.9 2101.2, 2106.1, 2107.1, 2107.2, 2107.3, 2107.4, 2108.1, 2108.2, 2108.3, 2109.1, 2109.1.1, 2109.2, 2109.2.1, 2109.3, 2110.1
602—2013	Specification for Masonry Structures	1405.6.1, 1705.4, 1807.1.6.3, 2103.1, 2103.2.1, 2103.3, 2103.4, 2104.1, 2105.1

TPI

Truss Plate Institute
218 N. Lee Street, Suite 312
Alexandria, VA 22314

Standard reference number	Title	Referenced in code section number
TPI 1—2014	National Design Standard for Metal-plate-connected Wood Truss Construction	2303.4.6, 2306.1

UL

UL LLC
333 Pfingsten Road
Northbrook, IL 60062-2096

Standard reference number	Title	Referenced in code section number
9—2009	Fire Tests of Window Assemblies	715.5.2, 716.3.2, 716.4, 716.5.3.2, 716.6, 716.6.1, 716.6.2, 716.6.8.1

UL—continued

10A—2009	Tin Clad Fire Doors	716.5
10B—2008	Fire Tests of Door Assemblies—with Revisions through April 2009	716.5.2
10C—2009	Positive Pressure Fire Tests of Door Assemblies	716.5.1, 716.5.3, 1010.1.10.1
14B—2008	Sliding Hardware for Standard Horizontally mounted Tin Clad Fire Doors—with Revisions Through May 3, 2013	716.5
14C—06	Swinging Hardware for Standard Tin Clad Fire Doors Mounted Singly and in Pairs—with Revisions through May 2013	716.5
55A—04	Materials for Built-Up Roof Coverings	1507.10.2
103—2010	Factory-built Chimneys, for Residential Type and Building Heating Appliances—with Revisions through July 2012	718.2.5.1
127—2011	Factory-built Fireplaces	718.2.5.1, 2111.11
199E—04	Outline of Investigation for Fire Testing of Sprinklers and Water Spray Nozzles for Protection of Deep Fat Fryers	904.11.4.1
217—06	Single and Multiple Station Smoke Alarms—with Revisions through April 2012	907.2.11
263—11	Standard for Fire Tests of Building Construction and Materials	703.2, 703.2.1, 703.2.3, 703.3, 703.4, 703.6, 704.12, 705.7, 705.8.5, 707.7, 711.3.2, 714.3.1, 714.4.1.1, 715.1, 716.2, Table 716.3, 716.5.6, 716.5.8.1.1, 716.7.1, 717.5.2, 717.5.3, 717.6.2.1, Table 721.1(1), 1407.10.2, 2103.1, 2603.4, 2603.5.1
268—09	Smoke Detectors for Fire Alarm Systems	407.8, 907.2.6.2, 907.2.11.7
294—1999	Access Control System Units—with Revisions through September 2010	1010.1.9.6, 1010.1.9.8, 1010.1.9.9
300—05(R2010)	Fire Testing of Fire Extinguishing Systems for Protection of Commercial Cooking Equipment—with Revisions through July 16, 2010	904.11
300A—06	Outline of Investigation for Extinguishing System Units for Residential Range Top Cooking Surfaces	407.2.6, 904.13
305—2012	Panic Hardware	1010.1.10.1
325—02	Door, Drapery, Gate, Louver and Window Operations and Systems—with Revisions through June 2013	406.3.6, 3110.4
555—2006	Fire Dampers—with Revisions through May 2012	717.3
555C—2006	Ceiling Dampers—with Revisions through May 2010	717.3
555S—99	Smoke Dampers—with Revisions through May 2012	717.3, 717.3.1
580—2006	Test for Uplift Resistance of Roof Assemblies—with Revisions through July 2009	1504.3.1, 1504.3.2
641—2010	Type L Low-temperature Venting Systems—with Revisions through May 2013	2113.11.1.4
710B—2011	Recirculating Systems	904.11
723—2008	Standard for Test for Surface Burning Characteristics of Building Materials—with Revisions through September 2010	202, 402.6.4.4, 406.7.2, 703.5.2, 720.1, 720.4, 803.1.1, 803.1.4, 803.10, 803.11, 806.7, 1404.12.1, 1407.9, 1407.10.1, 1409.9, 1409.10.1, 1510.6.2, 1510.6.3, 2303.2, 2603.3, 2603.4.1.13, 2606.3.5.4, 2603.7.1, 2603.7.2, 2603.7.3, 2604.2.4, 2606.4, 2612.3, 2614.3, 3105.4
790—04	Standard Test Methods for Fire Tests of Roof Coverings—with Revisions through October 2008	1505.1, 2603.6, 2610.2, 2610.3
793—08	Standards for Automatically Operated Roof Vents for Smoke and Heat—with Revisions through September 2011	406.8.5.1.1, 910.3.1
864—03	Standards for Control Units and Accessories for Fire Alarm Systems—with Revisions through August 2012	421.6.2, 909.12
924—06	Standard for Safety Emergency Lighting and Power Equipment—with Revisions through February 2011	1013.5
1040—96	Fire Test of Insulated Wall Construction—with Revisions through October 2012	1407.10.3, 1409.10.3, 2603.4, 2603.9
1256—02	Fire Test of Roof Deck Construction—with Revisions through January 2007	1508.1, 2603.3, 2603.4.1.5
1479—03	Fire Tests of Through-penetration Firestops—with Revisions through October 2012	202, 714.3.1.2, 714.3.2, 714.4.1.2, 714.4.4
1482—2011	Solid-Fuel-type Room Heaters	2112.2, 2112.5
1703—02	Flat-Plate Photovoltaic Modules and Panels—with Revisions through November 2014	1505.9, 1507.17.1, 1507.17.6, 1509.7.4
1715—97	Fire Test of Interior Finish Material—with Revisions through January 2013	1407.10.3, 1409.10.2, 1409.10.3, 2603.4, 2603.9, 2614.4
1777—2007	Chimney Liners—with Revisions through July 2009	2113.11.1, 2113.19
1784—01	Air Leakage Tests of Door Assemblies—with Revisions through July 2009	710.5.2.2, 710.5.2.2.1, 716.5.3.1, 716.5.7.1, 716.5.7.3, 3006.3, 3007.6.3, 3008.6.3
1897—12	Uplift Tests for Roof Covering Systems	1504.3.1
1975—06	Fire Test of Foamed Plastics Used for Decorative Purposes	402.6.2, 402.6.4.5, 424.2

UL—continued

1994—04	Luminous Egress Path Marking Systems—with Revisions through November 2010	411.7, 1025.2.1, 1025.2.3, 1025.2.4, 1025.4
2017—2008	Standards for General-purpose Signaling Devices and Systems—with Revisions through May 2011	406.8.5.1.1, 3109.4.1.8
2034—2008	Standard for Single- and Multiple-Station Carbon Monoxide Alarm—with Revisions through February 2009	915.4.2, 915.4.3
2075—2013	Standard for Gas and Vapor Detectors and Sensors	421.6.2, 406.8.5.1.1, 915.5.1, 915.5.3
2079—04	Tests for Fire Resistance of Building Joint Systems—with Revisions through December 2012	202, 715.3, 715.6
2196—2001	Tests for Fire Resistive Cables—with Revisions through March 2012	913.2.2, 2702.3
2200—2012	Stationary Engine Generator Assemblies—with Revisions through June 2013	2702.1.1

ULC

Underwriters Laboratories of Canada
7 Underwriters Road
Toronto, Ontario, Canada M1R3B4

Standard reference number	Title	Referenced in code section number
CAN/ULC S 102.2—2010	Standard Method of Test for Surface Burning Characteristics of Flooring, Floor Coverings and Miscellaneous Materials and Assemblies—with 2000 Revisions	720.4

USC

United States Code
c/o Superintendent of Documents
U.S. Government Printing Office
732 North Capitol Street NW
Washington, DC 20401

Standard reference number	Title	Referenced in code section number
18 USC Part 1, Ch.40	Importation, Manufacture, Distribution and Storage of Explosive Materials	202

WCLIB

West Coast Lumber Inspection Bureau
P. O. Box 23145
Portland, OR 97281

Standard reference number	Title	Referenced in code section number
AITC Technical Note 7—96	Calculation of Fire Resistance of Glued Laminated Timbers	722.6.3.3
AITC 104—03	Typical Construction Details	2306.1
AITC 110—01	Standard Appearance Grades for Structural Glued Laminated Timber	2306.1
AITC 113—10	Standard for Dimensions of Structural Glued Laminated Timber	2306.1
AITC 117—10	Standard Specifications for Structural Glued Laminated Timber of Softwood Species	2306.1
AITC 119—96	Standard Specifications for Structural Glued Laminated Timber of Hardwood Species	2306.1
AITC 200—09	Manufacturing Quality Control Systems Manual for Structural Glued Laminated Timber	2306.1

WDMA

Window and Door Manufacturers Association
2025 M Street, NW Suite 800
Washington, DC 20036-3309

Standard reference number	Title	Referenced in code section number
AAMA/WDMA/CSA 101/I.S.2/A440—11	Specifications for Windows, Doors and Unit Skylights	1709.5.1, 2405.5

WRI

Wire Reinforcement Institute, Inc.
942 Main Street, Suite 300
Hartford, CT 06103

Standard reference number	Title	Referenced in code section number
WRI/CRSI—81	Design of Slab-on-ground Foundations—with 1996 Update	1808.6.2

APPENDIX A

EMPLOYEE QUALIFICATIONS

The provisions contained in this appendix are not mandatory unless specifically referenced in the adopting ordinance.

SECTION A101
BUILDING OFFICIAL QUALIFICATIONS

A101.1 Building official. The *building official* shall have at least 10 years' experience or equivalent as an architect, engineer, inspector, contractor or superintendent of construction, or any combination of these, 5 years of which shall have been supervisory experience. The *building official* should be certified as a *building official* through a recognized certification program. The building official shall be appointed or hired by the applicable governing authority.

A101.2 Chief inspector. The *building official* can designate supervisors to administer the provisions of this code and the *International Mechanical*, *Plumbing* and *Fuel Gas Codes*. Each supervisor shall have at least 10 years' experience or equivalent as an architect, engineer, inspector, contractor or superintendent of construction, or any combination of these, 5 years of which shall have been in a supervisory capacity. They shall be certified through a recognized certification program for the appropriate trade.

A101.3 Inspector and plans examiner. The *building official* shall appoint or hire such number of officers, inspectors, assistants and other employees as shall be authorized by the jurisdiction. A person shall not be appointed or hired as inspector of construction or plans examiner who has not had at least 5 years' experience as a contractor, engineer, architect, or as a superintendent, foreman or competent mechanic in charge of construction. The inspector or plans examiner shall be certified through a recognized certification program for the appropriate trade.

A101.4 Termination of employment. Employees in the position of *building official*, chief inspector or inspector shall not be removed from office except for cause after full opportunity has been given to be heard on specific charges before such applicable governing authority.

SECTION A102
REFERENCED STANDARDS

IBC—15	International Building Code	A101.2
IMC—15	International Mechanical Code	A101.2
IPC—15	International Plumbing Code	A101.2
IFGC—15	International Fuel Gas Code	A101.2

APPENDIX B

BOARD OF APPEALS

The provisions contained in this appendix are not mandatory unless specifically referenced in the adopting ordinance.

SECTION B101
GENERAL

B101.1 Application. The application for appeal shall be filed on a form obtained from the *building official* within 20 days after the notice was served.

B101.2 Membership of board. The board of appeals shall consist of persons appointed by the chief appointing authority as follows:

1. One for 5 years; one for 4 years; one for 3 years; one for 2 years; and one for 1 year.
2. Thereafter, each new member shall serve for 5 years or until a successor has been appointed.

The *building official* shall be an ex officio member of said board but shall have no vote on any matter before the board.

B101.2.1 Alternate members. The chief appointing authority shall appoint two alternate members who shall be called by the board chairperson to hear appeals during the absence or disqualification of a member. Alternate members shall possess the qualifications required for board membership and shall be appointed for 5 years, or until a successor has been appointed.

B101.2.2 Qualifications. The board of appeals shall consist of five individuals, one from each of the following professions or disciplines:

1. Registered design professional with architectural experience or a builder or superintendent of building construction with at least 10 years' experience, 5 of which shall have been in responsible charge of work.
2. Registered design professional with structural engineering experience.
3. Registered design professional with mechanical and plumbing engineering experience or a mechanical contractor with at least 10 years' experience, 5 of which shall have been in responsible charge of work.
4. Registered design professional with electrical engineering experience or an electrical contractor with at least 10 years' experience, 5 of which shall have been in responsible charge of work.
5. Registered design professional with fire protection engineering experience or a fire protection contractor with at least 10 years' experience, 5 of which shall have been in responsible charge of work.

B101.2.3 Rules and procedures. The board is authorized to establish policies and procedures necessary to carry out its duties.

B101.2.4 Chairperson. The board shall annually select one of its members to serve as chairperson.

B101.2.5 Disqualification of member. A member shall not hear an appeal in which that member has a personal, professional or financial interest.

B101.2.6 Secretary. The chief administrative officer shall designate a qualified clerk to serve as secretary to the board. The secretary shall file a detailed record of all proceedings in the office of the chief administrative officer.

B101.2.7 Compensation of members. Compensation of members shall be determined by law.

B101.3 Notice of meeting. The board shall meet upon notice from the chairperson, within 10 days of the filing of an appeal or at stated periodic meetings.

B101.3.1 Open hearing. All hearings before the board shall be open to the public. The appellant, the appellant's representative, the building official and any person whose interests are affected shall be given an opportunity to be heard.

B101.3.2 Procedure. The board shall adopt and make available to the public through the secretary procedures under which a hearing will be conducted. The procedures shall not require compliance with strict rules of evidence, but shall mandate that only relevant information be received.

B101.3.3 Postponed hearing. When five members are not present to hear an appeal, either the appellant or the appellant's representative shall have the right to request a postponement of the hearing.

B101.4 Board decision. The board shall modify or reverse the decision of the *building official* by a concurring vote of two-thirds of its members.

B101.4.1 Resolution. The decision of the board shall be by resolution. Certified copies shall be furnished to the appellant and to the *building official.*

B101.4.2 Administration. The *building official* shall take immediate action in accordance with the decision of the board.

APPENDIX C

GROUP U—AGRICULTURAL BUILDINGS

The provisions contained in this appendix are not mandatory unless specifically referenced in the adopting ordinance.

SECTION C101
GENERAL

C101.1 Scope. The provisions of this appendix shall apply exclusively to agricultural buildings. Such buildings shall be classified as Group U and shall include the following uses:

1. Livestock shelters or buildings, including shade structures and milking barns.
2. Poultry buildings or shelters.
3. Barns.
4. Storage of equipment and machinery used exclusively in agriculture.
5. Horticultural structures, including detached production greenhouses and crop protection shelters.
6. Sheds.
7. Grain silos.
8. Stables.

SECTION C102
ALLOWABLE HEIGHT AND AREA

C102.1 General. Buildings classified as Group U Agricultural shall not exceed the area or height limits specified in Table C102.1.

C102.2 One-story unlimited area. The area of a one-story Group U agricultural building shall not be limited if the building is surrounded and adjoined by *public ways* or yards not less than 60 feet (18 288 mm) in width.

C102.3 Two-story unlimited area. The area of a two-story Group U agricultural building shall not be limited if the building is surrounded and adjoined by *public ways* or *yards* not less than 60 feet (18 288 mm) in width and is provided with an *approved automatic sprinkler system* throughout in accordance with Section 903.3.1.1.

SECTION C103
MIXED OCCUPANCIES

C103.1 Mixed occupancies. Mixed occupancies shall be protected in accordance with Section 508.

SECTION C104
EXITS

C104.1 Exit facilities. Exits shall be provided in accordance with Chapters 10 and 11.

Exceptions:

1. The maximum travel distance from any point in the building to an approved exit shall not exceed 300 feet (91 440 mm).
2. One exit is required for each 15,000 square feet (1393.5 m^2) of area or fraction thereof.

TABLE C102.1
BASIC ALLOWABLE AREA FOR A GROUP U, ONE STORY IN HEIGHT AND MAXIMUM HEIGHT OF SUCH OCCUPANCY

I		II		III and IV		V	
A	B	A	B	III A and IV	III B	A	B
ALLOWABLE AREA (square feet)[a]							
Unlimited	60,000	27,100	18,000	27,100	18,000	21,100	12,000
MAXIMUM HEIGHT IN STORIES							
Unlimited	12	4	2	4	2	3	2
MAXIMUM HEIGHT IN FEET							
Unlimited	160	65	55	65	55	50	40

For SI: 1 square foot = 0.0929 m^2.

a. See Section C102 for unlimited area under certain conditions.

APPENDIX D

FIRE DISTRICTS

The provisions contained in this appendix are not mandatory unless specifically referenced in the adopting ordinance.

SECTION D101
GENERAL

D101.1 Scope. The fire district shall include such territory or portion as outlined in an ordinance or law entitled "An Ordinance (Resolution) Creating and Establishing a Fire District." Wherever, in such ordinance creating and establishing a fire district, reference is made to the fire district, it shall be construed to mean the fire district designated and referred to in this appendix.

D101.1.1 Mapping. The fire district complying with the provisions of Section D101.1 shall be shown on a map that shall be available to the public.

D101.2 Establishment of area. For the purpose of this code, the fire district shall include that territory or area as described in Sections D101.2.1 through D101.2.3.

D101.2.1 Adjoining blocks. Two or more adjoining blocks, exclusive of intervening streets, where at least 50 percent of the ground area is built upon and more than 50 percent of the built-on area is devoted to hotels and motels of Group R-1; Group B occupancies; theaters, nightclubs, restaurants of Group A-1 and A-2 occupancies; garages, express and freight depots, warehouses and storage buildings used for the storage of finished products (not located with and forming a part of a manufactured or industrial plant); or Group S occupancy. Where the average height of a building is two and one-half *stories* or more, a block should be considered if the ground area built upon is at least 40 percent.

D101.2.2 Buffer zone. Where four contiguous blocks or more comprise a fire district, there shall be a buffer zone of 200 feet (60 960 mm) around the perimeter of such district. Streets, rights-of-way and other open spaces not subject to building construction can be included in the 200-foot (60 960 mm) buffer zone.

D101.2.3 Developed blocks. Where blocks adjacent to the fire district have developed to the extent that at least 25 percent of the ground area is built upon and 40 percent or more of the built-on area is devoted to the occupancies specified in Section D101.2.1, they can be considered for inclusion in the fire district, and can form all or a portion of the 200-foot (60 960 mm) buffer zone required in Section D101.2.2.

SECTION D102
BUILDING RESTRICTIONS

D102.1 Types of construction permitted. Within the fire district every building hereafter erected shall be either Type I, II, III or IV, except as permitted in Section D104.

D102.2 Other specific requirements.

D102.2.1 Exterior walls. Exterior walls of buildings located in the fire district shall comply with the requirements in Table 601 except as required in Section D102.2.6.

D102.2.2 Group H prohibited. Group H occupancies shall be prohibited from location within the fire district.

D102.2.3 Construction type. Every building shall be constructed as required based on the type of construction indicated in Chapter 6.

D102.2.4 Roof covering. Roof covering in the fire district shall conform to the requirements of Class A or B roof coverings as defined in Section 1505.

D102.2.5 Structural fire rating. Walls, floors, roofs and their supporting structural members shall be a minimum of 1-hour fire-resistance-rated construction.

Exceptions:

1. Buildings of Type IV construction.
2. Buildings equipped throughout with an *automatic sprinkler system* in accordance with Section 903.3.1.1.
3. Automobile parking structures.
4. Buildings surrounded on all sides by a permanently open space of not less than 30 feet (9144 mm).
5. Partitions complying with Section 603.1, Item 11.

D102.2.6 Exterior walls. Exterior load-bearing walls of Type II buildings shall have a *fire-resistance rating* of 2 hours or more where such walls are located within 30 feet (9144 mm) of a common property line or an assumed property line. Exterior nonload-bearing walls of Type II buildings located within 30 feet (9144 mm) of a common property line or an assumed property line shall have fire-resistance ratings as required by Table 601, but not less than 1 hour. Exterior walls located more than 30 feet (9144 mm) from a common property line or an assumed property line shall comply with Table 601.

Exception: In the case of one-story buildings that are 2,000 square feet (186 m^2) or less in area, exterior walls located more than 15 feet (4572 mm) from a common property line or an assumed property line need only comply with Table 601.

D102.2.7 Architectural trim. Architectural *trim* on buildings located in the fire district shall be constructed of *approved* noncombustible materials or *fire-retardant-treated wood.*

D102.2.8 Permanent canopies. Permanent canopies are permitted to extend over adjacent open spaces provided all of the following are met:

1. The canopy and its supports shall be of noncombustible material, *fire-retardant-treated wood*, Type IV construction or of 1-hour fire-resistance-rated construction.

   Exception: Any textile covering for the canopy shall be flame resistant as determined by tests conducted in accordance with NFPA 701 after both accelerated water leaching and accelerated weathering.

2. Any canopy covering, other than textiles, shall have a *flame spread index* not greater than 25 when tested in accordance with ASTM E 84 or UL 723 in the form intended for use.
3. The canopy shall have at least one long side open.
4. The maximum horizontal width of the canopy shall not exceed 15 feet (4572 mm).
5. The *fire resistance* of *exterior walls* shall not be reduced.

D102.2.9 Roof structures. Structures, except aerial supports 12 feet (3658 mm) high or less, flagpoles, water tanks and cooling towers, placed above the roof of any building within the fire district shall be of noncombustible material and shall be supported by construction of noncombustible material.

D102.2.10 Plastic signs. The use of plastics complying with Section 2611 for signs is permitted provided the structure of the sign in which the plastic is mounted or installed is noncombustible.

D102.2.11 Plastic veneer. Exterior plastic veneer is not permitted in the fire district.

SECTION D103
CHANGES TO BUILDINGS

D103.1 Existing buildings within the fire district. An existing building shall not hereafter be increased in height or area unless it is of a type of construction permitted for new buildings within the fire district or is altered to comply with the requirements for such type of construction. Nor shall any existing building be hereafter extended on any side, nor square footage or floors added within the existing building unless such modifications are of a type of construction permitted for new buildings within the fire district.

D103.2 Other alterations. Nothing in Section D103.1 shall prohibit other alterations within the fire district provided there is no change of occupancy that is otherwise prohibited and the fire hazard is not increased by such *alteration*.

D103.3 Moving buildings. Buildings shall not hereafter be moved into the fire district or to another lot in the fire district unless the building is of a type of construction permitted in the fire district.

SECTION D104
BUILDINGS LOCATED PARTIALLY IN THE FIRE DISTRICT

D104.1 General. Any building located partially in the fire district shall be of a type of construction required for the fire district, unless the major portion of such building lies outside of the fire district and no part is more than 10 feet (3048 mm) inside the boundaries of the fire district.

SECTION D105
EXCEPTIONS TO RESTRICTIONS IN FIRE DISTRICT

D105.1 General. The preceding provisions of this appendix shall not apply in the following instances:

1. Temporary buildings used in connection with duly authorized construction.
2. A private garage used exclusively as such, not more than one *story* in height, nor more than 650 square feet (60 m^2) in area, located on the same lot with a *dwelling*.
3. Fences not over 8 feet (2438 mm) high.
4. Coal tipples, material bins and trestles of Type IV construction.
5. Water tanks and cooling towers conforming to Sections 1509.3 and 1509.4.
6. Greenhouses less than 15 feet (4572 mm) high.
7. Porches on dwellings not over one *story* in height, and not over 10 feet (3048 mm) wide from the face of the building, provided such porch does not come within 5 feet (1524 mm) of any property line.
8. Sheds open on a long side not over 15 feet (4572 mm) high and 500 square feet (46 m^2) in area.
9. One- and two-family *dwellings* where of a type of construction not permitted in the fire district can be extended 25 percent of the floor area existing at the time of inclusion in the fire district by any type of construction permitted by this code.
10. Wood decks less than 600 square feet (56 m^2) where constructed of 2-inch (51 mm) nominal wood, pressure treated for exterior use.
11. Wood veneers on *exterior walls* conforming to Section 1405.5.
12. Exterior plastic veneer complying with Section 2605.2 where installed on exterior walls required to have a *fire-resistance rating* not less than 1 hour, provided the exterior plastic veneer does not exhibit sustained flaming as defined in NFPA 268.

SECTION D106
REFERENCED STANDARDS

ASTM E 84—2013A	Test Method for Surface Burning Characteristics of Building Materials	D102.2.8
NFPA 268—12	Test Method for Determining Ignitability of Exterior Wall Assemblies Using a Radiant Heat Energy Source	D105.1
NFPA 701—10	Methods of Fire Tests for Flame-Propagation of Textiles and Films	D102.2.8
UL 723—08	Standard for Test for Surface Burning Characteristics of Building Materials, with Revisions through September 2010	D102.2.8

APPENDIX E

SUPPLEMENTARY ACCESSIBILITY REQUIREMENTS

The provisions contained in this appendix are not mandatory unless specifically referenced in the adopting ordinance.

SECTION E101
GENERAL

E101.1 Scope. The provisions of this appendix shall control the supplementary requirements for the design and construction of facilities for *accessibility* for individuals with disabilities.

E101.2 Design. Technical requirements for items herein shall comply with this code and ICC A117.1.

SECTION E102
DEFINITIONS

E102.1 General. The following words and terms shall, for the purposes of this appendix, have the meanings shown herein. Refer to Chapter 2 of this code for general definitions.

CLOSED-CIRCUIT TELEPHONE. A telephone with a dedicated line such as a house phone, courtesy phone or phone that must be used to gain entrance to a facility.

MAILBOXES. Receptacles for the receipt of documents, packages or other deliverable matter. *Mailboxes* include, but are not limited to, post office boxes and receptacles provided by commercial mail-receiving agencies, apartment houses and schools.

TRANSIENT LODGING. A building, facility or portion thereof, excluding inpatient medical care facilities and long-term care facilities, that contains one or more *dwelling units* or *sleeping units*. Examples of *transient lodging* include, but are not limited to, resorts, group homes, hotels, motels, dormitories, homeless shelters, halfway houses and social service lodging.

SECTION E103
ACCESSIBLE ROUTE

E103.1 Raised platforms. In banquet rooms or spaces where a head table or speaker's lectern is located on a raised platform, an *accessible* route shall be provided to the platform.

SECTION E104
SPECIAL OCCUPANCIES

E104.1 General. *Transient lodging* facilities shall be provided with *accessible* features in accordance with Section E104.2. Group I-3 occupancies shall be provided with *accessible* features in accordance with Section E104.2.

E104.2 Communication features. *Accessible* communication features shall be provided in accordance with Sections E104.2.1 through E104.2.4.

E104.2.1 Transient lodging. In *transient lodging* facilities, *sleeping units* with *accessible* communication features shall be provided in accordance with Table E104.2.1. Units required to comply with Table E104.2.1 shall be dispersed among the various classes of units.

E104.2.2 Group I-3. In Group I-3 occupancies at least 2 percent, but no fewer than one of the total number of general holding cells and general housing cells equipped with audible *emergency alarm systems* and permanently installed telephones within the cell, shall comply with Section E104.2.4.

E104.2.3 Dwelling units and sleeping units. Where *dwelling units* and *sleeping units* are altered or added, the requirements of Section E104.2 shall apply only to the units being altered or added until the number of units with

TABLE E104.2.1
DWELLING OR SLEEPING UNITS WITH ACCESSIBLE COMMUNICATION FEATURES

TOTAL NUMBER OF DWELLING OR SLEEPING UNITS PROVIDED	MINIMUM REQUIRED NUMBER OF DWELLING OR SLEEPING UNITS WITH ACCESSIBLE COMMUNICATION FEATURES
1	1
2 to 25	2
26 to 50	4
51 to 75	7
76 to 100	9
101 to 150	12
151 to 200	14
201 to 300	17
301 to 400	20
401 to 500	22
501 to 1,000	5% of total
1,001 and over	50 plus 3 for each 100 over 1,000

accessible communication features complies with the minimum number required for new construction.

E104.2.4 Notification devices. Visual notification devices shall be provided to alert room occupants of incoming telephone calls and a door knock or bell. Notification devices shall not be connected to visual alarm signal appliances. Permanently installed telephones shall have volume controls and an electrical outlet complying with ICC A117.1 located within 48 inches (1219 mm) of the telephone to facilitate the use of a TTY.

SECTION E105
OTHER FEATURES AND FACILITIES

E105.1 Portable toilets and bathing rooms. Where multiple single-user portable toilet or bathing units are clustered at a single location, at least 5 percent, but not less than one toilet unit or bathing unit at each cluster, shall be *accessible*. Signs containing the International Symbol of Accessibility shall identify *accessible* portable toilets and bathing units.

Exception: Portable toilet units provided for use exclusively by construction personnel on a construction site.

E105.2 Laundry equipment. Where provided in spaces required to be *accessible*, washing machines and clothes dryers shall comply with this section.

E105.2.1 Washing machines. Where three or fewer washing machines are provided, at least one shall be *accessible*. Where more than three washing machines are provided, at least two shall be *accessible*.

E105.2.2 Clothes dryers. Where three or fewer clothes dryers are provided, at least one shall be *accessible*. Where more than three clothes dryers are provided, at least two shall be *accessible*.

E105.3 Gaming machines, depositories, vending machines, change machines and similar equipment. At least one of each type of depository, vending machine, change machine and similar equipment shall be *accessible*. Two percent of gaming machines shall be *accessible* and provided with a front approach. *Accessible* gaming machines shall be distributed throughout the different types of gaming machines provided.

Exception: Drive-up-only depositories are not required to comply with this section.

E105.4 Mailboxes. Where *mailboxes* are provided in an interior location, at least 5 percent, but not less than one, of each type shall be *accessible*. In residential and institutional facilities, where *mailboxes* are provided for each *dwelling unit* or *sleeping unit*, *accessible mailboxes* shall be provided for each unit required to be an *Accessible unit*.

E105.5 Automatic teller machines and fare machines. Where automatic teller machines or self-service fare vending, collection or adjustment machines are provided, at least one machine of each type at each location where such machines are provided shall be *accessible*. Where bins are provided for envelopes, wastepaper or other purposes, at least one of each type shall be *accessible*.

E105.6 Two-way communication systems. Where two-way communication systems are provided to gain admittance to a building or facility or to restricted areas within a building or facility, the system shall be *accessible*.

SECTION E106
TELEPHONES

E106.1 General. Where coin-operated public pay telephones, coinless public pay telephones, public *closed-circuit telephones*, courtesy phones or other types of public telephones are provided, *accessible* public telephones shall be provided in accordance with Sections E106.2 through E106.5 for each type of public telephone provided. For purposes of this section, a bank of telephones shall be considered two or more adjacent telephones.

E106.2 Wheelchair-accessible telephones. Where public telephones are provided, wheelchair-accessible telephones shall be provided in accordance with Table E106.2.

Exception: Drive-up-only public telephones are not required to be *accessible*.

TABLE E106.2
WHEELCHAIR-ACCESSIBLE TELEPHONES

NUMBER OF TELEPHONES PROVIDED ON A FLOOR, LEVEL OR EXTERIOR SITE	MINIMUM REQUIRED NUMBER OF WHEELCHAIR-ACCESSIBLE TELEPHONES
1 or more single unit	1 per floor, level and exterior site
1 bank	1 per floor, level and exterior site
2 or more banks	1 per bank

E106.3 Volume controls. All public telephones provided shall have *accessible* volume control.

E106.4 TTYs. TTYs shall be provided in accordance with Sections E106.4.1 through E106.4.9.

E106.4.1 Bank requirement. Where four or more public pay telephones are provided at a bank of telephones, at least one public TTY shall be provided at that bank.

Exception: TTYs are not required at banks of telephones located within 200 feet (60 960 mm) of, and on the same floor as, a bank containing a public TTY.

E106.4.2 Floor requirement. Where four or more public pay telephones are provided on a floor of a privately owned building, at least one public TTY shall be provided on that floor. Where at least one public pay telephone is provided on a floor of a publicly owned building, at least one public TTY shall be provided on that floor.

E106.4.3 Building requirement. Where four or more public pay telephones are provided in a privately owned building, at least one public TTY shall be provided in the building. Where at least one public pay telephone is provided in a publicly owned building, at least one public TTY shall be provided in the building.

E106.4.4 Site requirement. Where four or more public pay telephones are provided on a site, at least one public TTY shall be provided on the site.

E106.4.5 Rest stops, emergency road stops and service plazas. Where a public pay telephone is provided at a public rest stop, emergency road stop or service plaza, at least one public TTY shall be provided.

E106.4.6 Hospitals. Where a public pay telephone is provided in or adjacent to a hospital emergency room, hospital recovery room or hospital waiting room, at least one public TTY shall be provided at each such location.

E106.4.7 Transportation facilities. Transportation facilities shall be provided with TTYs in accordance with Sections E109.2.5 and E110.2 in addition to the TTYs required by Sections E106.4.1 through E106.4.4.

E106.4.8 Detention and correctional facilities. In detention and correctional facilities, where a public pay telephone is provided in a secured area used only by detainees or inmates and security personnel, then at least one TTY shall be provided in at least one secured area.

E106.4.9 Signs. Public TTYs shall be identified by the International Symbol of TTY complying with ICC A117.1. Directional signs indicating the location of the nearest public TTY shall be provided at banks of public pay telephones not containing a public TTY. Additionally, where signs provide direction to public pay telephones, they shall also provide direction to public TTYs. Such signs shall comply with visual signage requirements in ICC A117.1 and shall include the International Symbol of TTY.

E106.5 Shelves for portable TTYs. Where a bank of telephones in the interior of a building consists of three or more public pay telephones, at least one public pay telephone at the bank shall be provided with a shelf and an electrical outlet.

Exceptions:

1. In secured areas of detention and correctional facilities, if shelves and outlets are prohibited for purposes of security or safety shelves and outlets for TTYs are not required to be provided.
2. The shelf and electrical outlet shall not be required at a bank of telephones with a TTY.

SECTION E107
SIGNAGE

E107.1 Signs. Required *accessible* portable toilets and bathing facilities shall be identified by the International Symbol of Accessibility.

E107.2 Designations. Interior and exterior signs identifying permanent rooms and spaces shall be visual characters, raised characters and braille complying with ICC A117.1. Where pictograms are provided as designations of interior rooms and spaces, the pictograms shall have visual characters, raised characters and braille complying with ICC A117.1.

Exceptions:

1. Exterior signs that are not located at the door to the space they serve are not required to comply.
2. Building directories, menus, seat and row designations in assembly areas, occupant names, building addresses and company names and logos are not required to comply.
3. Signs in parking facilities are not required to comply.
4. Temporary (seven days or less) signs are not required to comply.
5. In detention and correctional facilities, signs not located in public areas are not required to comply.

E107.3 Directional and informational signs. Signs that provide direction to, or information about, permanent interior spaces of the site and facilities shall contain visual characters complying with ICC A117.1.

Exception: Building directories, personnel names, company or occupant names and logos, menus and temporary (seven days or less) signs are not required to comply with ICC A117.1.

E107.4 Other signs. Signage indicating special accessibility provisions shall be provided as follows:

1. At bus stops and terminals, signage must be provided in accordance with Section E108.4.
2. At fixed facilities and stations, signage must be provided in accordance with Sections E109.2.2 through E109.2.2.3.
3. At airports, terminal information systems must be provided in accordance with Section E110.3.

SECTION E108
BUS STOPS

E108.1 General. Bus stops shall comply with Sections E108.2 through E108.5.

E108.2 Bus boarding and alighting areas. Bus boarding and alighting areas shall comply with Sections E108.2.1 through E108.2.4.

E108.2.1 Surface. Bus boarding and alighting areas shall have a firm, stable surface.

E108.2.2 Dimensions. Bus boarding and alighting areas shall have a clear length of 96 inches (2440 mm) minimum, measured perpendicular to the curb or vehicle roadway edge, and a clear width of 60 inches (1525 mm) minimum, measured parallel to the vehicle roadway.

E108.2.3 Connection. Bus boarding and alighting areas shall be connected to streets, sidewalks or pedestrian paths by an *accessible route* complying with Section 1104.

E108.2.4 Slope. Parallel to the roadway, the slope of the bus boarding and alighting area shall be the same as the roadway, to the maximum extent practicable. For water drainage, a maximum slope of 1:48 perpendicular to the roadway is allowed.

E108.3 Bus shelters. Where provided, new or replaced bus shelters shall provide a minimum clear floor or ground space complying with ICC A117.1, Section 305, entirely within the shelter. Such shelters shall be connected by an *accessible route* to the boarding area required by Section E108.2.

E108.4 Signs. New bus route identification signs shall have finish and contrast complying with ICC A117.1. Additionally, to the maximum extent practicable, new bus route identification signs shall provide visual characters complying with ICC A117.1.

Exception: Bus schedules, timetables and maps that are posted at the bus stop or bus bay are not required to meet this requirement.

E108.5 Bus stop siting. Bus stop sites shall be chosen such that, to the maximum extent practicable, the areas where lifts or ramps are to be deployed comply with Sections E108.2 and E108.3.

SECTION E109
TRANSPORTATION FACILITIES AND STATIONS

E109.1 General. Fixed transportation facilities and stations shall comply with the applicable provisions of Section E109.2.

E109.2 New construction. New stations in rapid rail, light rail, commuter rail, intercity rail, high speed rail and other fixed guideway systems shall comply with Sections E109.2.1 through E109.2.8.

E109.2.1 Station entrances. Where different entrances to a station serve different transportation fixed routes or groups of fixed routes, at least one entrance serving each group or route shall comply with Section 1104.

E109.2.2 Signs. Signage in fixed transportation facilities and stations shall comply with Sections E109.2.2.1 through E109.2.2.3.

E109.2.2.1 Raised character and braille signs. Where signs are provided at entrances to stations identifying the station or the entrance, or both, at least one sign at each entrance shall be raised characters and braille. A minimum of one raised character and braille sign identifying the specific station shall be provided on each platform or boarding area. Such signs shall be placed in uniform locations at entrances and on platforms or boarding areas within the transit system to the maximum extent practicable.

Exceptions:

1. Where the station has no defined entrance but signs are provided, the raised characters and braille signs shall be placed in a central location.
2. Signs are not required to be raised characters and braille where audible signs are remotely transmitted to hand-held receivers, or are user or proximity actuated.

E109.2.2.2 Identification signs. Stations covered by this section shall have identification signs containing visual characters complying with ICC A117.1. Signs shall be clearly visible and within the sightlines of a standing or sitting passenger from within the train on both sides when not obstructed by another train.

E109.2.2.3 Informational signs. Lists of stations, routes and destinations served by the station that are located on boarding areas, *platforms* or *mezzanines* shall provide visual characters complying with ICC A117.1. Signs covered by this provision shall, to the maximum extent practicable, be placed in uniform locations within the transit system.

E109.2.3 Fare machines. Self-service fare vending, collection and adjustment machines shall comply with ICC A117.1, Section 707. Where self-service fare vending, collection or adjustment machines are provided for the use of the general public, at least one *accessible* machine of each type provided shall be provided at each *accessible* point of entry and *exit*.

E109.2.4 Rail-to-platform height. Station platforms shall be positioned to coordinate with vehicles in accordance with the applicable provisions of 36 CFR, Part 1192. Low-level platforms shall be 8 inches (250 mm) minimum above top of rail.

Exception: Where vehicles are boarded from sidewalks or street level, low-level platforms shall be permitted to be less than 8 inches (250 mm).

E109.2.5 TTYs. Where a public pay telephone is provided in a transit facility (as defined by the Department of Transportation), at least one public TTY complying with ICC A117.1, Section 704.4, shall be provided in the station. In addition, where one or more public pay telephones serve a particular entrance to a transportation facility, at least one TTY telephone complying with ICC A117.1, Section 704.4, shall be provided to serve that entrance.

E109.2.6 Track crossings. Where a circulation path serving boarding platforms crosses tracks, an *accessible* route shall be provided.

Exception: Openings for wheel flanges shall be permitted to be $2^1/_2$ inches (64 mm) maximum.

E109.2.7 Public address systems. Where public address systems convey audible information to the public, the same or equivalent information shall be provided in a visual format.

E109.2.8 Clocks. Where clocks are provided for use by the general public, the clock face shall be uncluttered so that its elements are clearly visible. Hands, numerals and digits shall contrast with the background either light-on-dark or dark-on-light. Where clocks are mounted overhead, numerals and digits shall comply with visual character requirements.

SECTION E110
AIRPORTS

E110.1 New construction. New construction of airports shall comply with Sections E110.2 through E110.4.

E110.2 TTYs. Where public pay telephones are provided, at least one TTY shall be provided in compliance with ICC A117.1, Section 704.4. Additionally, if four or more public pay telephones are located in a main terminal outside the

security areas, a concourse within the security areas or a baggage claim area in a terminal, at least one public TTY complying with ICC A117.1, Section 704.4, shall also be provided in each such location.

E110.3 Terminal information systems. Where terminal information systems convey audible information to the public, the same or equivalent information shall be provided in a visual format.

E110.4 Clocks. Where clocks are provided for use by the general public, the clock face shall be uncluttered so that its elements are clearly visible. Hands, numerals and digits shall contrast with the background either light-on-dark or dark-on-light. Where clocks are mounted overhead, numerals and digits shall comply with visual character requirements.

SECTION E111
REFERENCED STANDARDS

DOJ 36 CFR Part 1192	Americans with Disabilities Act (ADA) Accessibility Guidelines for Transportation Vehicles (ADAAG). Washington, DC: Department of Justice, 1991	E109.2.4
IBC-15	*International Building Code*	E102.1
ICC A117.1-09	Accessible and Usable Buildings and Facilities	E101.2, E104.2.4, E106.4.9, E107.2, E107.3, E108.3, E108.4, E109.2.2.2, E109.2.2.3, E109.2.3, E109.2.5, E110.2

APPENDIX F

RODENTPROOFING

The provisions contained in this appendix are not mandatory unless specifically referenced in the adopting ordinance.

User note: Code change proposals to this chapter will be considered by the IBC – Structural Code Development Committee during the 2016 (Group B) Code Development Cycle. See explanation on page iv.

SECTION F101 GENERAL

F101.1 General. Buildings or structures and the walls enclosing habitable or occupiable rooms and spaces in which persons live, sleep or work, or in which feed, food or foodstuffs are stored, prepared, processed, served or sold, shall be constructed in accordance with the provisions of this section.

F101.2 Foundation wall ventilation openings. Foundation wall ventilation openings shall be covered for their height and width with perforated sheet metal plates no less than 0.070 inch (1.8 mm) thick, expanded sheet metal plates not less than 0.047 inch (1.2 mm) thick, cast-iron grills or grating, extruded aluminum load-bearing vents or with hardware cloth of 0.035 inch (0.89 mm) wire or heavier. The openings therein shall not exceed $^1/_4$ inch (6.4 mm).

F101.3 Foundation and exterior wall sealing. Annular spaces around pipes, electric cables, conduits or other openings in the walls shall be protected against the passage of rodents by closing such openings with cement mortar, concrete masonry or noncorrosive metal.

F101.4 Doors. Doors on which metal protection has been applied shall be hinged so as to be free swinging. When closed, the maximum clearance between any door, door jambs and sills shall be not greater than $^3/_8$ inch (9.5 mm).

F101.5 Windows and other openings. Windows and other openings for the purpose of light or ventilation located in exterior walls within 2 feet (610 mm) above the existing ground level immediately below such opening shall be covered for their entire height and width, including frame, with hardware cloth of at least 0.035-inch (0.89 mm) wire or heavier.

F101.5.1 Rodent-accessible openings. Windows and other openings for the purpose of light and ventilation in the exterior walls not covered in this chapter, accessible to rodents by way of exposed pipes, wires, conduits and other appurtenances, shall be covered with wire cloth of at least 0.035-inch (0.89 mm) wire. In lieu of wire cloth covering, said pipes, wires, conduits and other appurtenances shall be blocked from rodent usage by installing solid sheet metal guards 0.024 inch (0.61 mm) thick or heavier. Guards shall be fitted around pipes, wires, conduits or other appurtenances. In addition, they shall be fastened securely to and shall extend perpendicularly from the exterior wall for a minimum distance of 12 inches (305 mm) beyond and on either side of pipes, wires, conduits or appurtenances.

F101.6 Pier and wood construction.

F101.6.1 Sill less than 12 inches above ground. Buildings not provided with a continuous foundation shall be provided with protection against rodents at grade by providing either an apron in accordance with Section F101.6.1.1 or a floor slab in accordance with Section F101.6.1.2.

F101.6.1.1 Apron. Where an apron is provided, the apron shall be not less than 8 inches (203 mm) above, nor less than 24 inches (610 mm) below, grade. The apron shall not terminate below the lower edge of the siding material. The apron shall be constructed of an approved nondecayable, water-resistant rodentproofing material of required strength and shall be installed around the entire perimeter of the building. Where constructed of masonry or concrete materials, the apron shall be not less than 4 inches (102 mm) in thickness.

F101.6.1.2 Grade floors. Where continuous concrete-grade floor slabs are provided, open spaces shall not be left between the slab and walls, and openings in the slab shall be protected.

F101.6.2 Sill at or above 12 inches above ground. Buildings not provided with a continuous foundation and that have sills 12 inches (305 mm) or more above ground level shall be provided with protection against rodents at grade in accordance with any of the following:

1. Section F101.6.1.1 or F101.6.1.2.
2. By installing solid sheet metal collars at least 0.024 inch (0.6 mm) thick at the top of each pier or pile and around each pipe, cable, conduit, wire or other item that provides a continuous pathway from the ground to the floor.
3. By encasing the pipes, cables, conduits or wires in an enclosure constructed in accordance with Section F101.6.1.1.

APPENDIX G

FLOOD-RESISTANT CONSTRUCTION

The provisions contained in this appendix are not mandatory unless specifically referenced in the adopting ordinance.

User note: Code change proposals to this chapter will be considered by the IBC – Structural Code Development Committee during the 2016 (Group B) Code Development Cycle. See explanation on page iv.

SECTION G101 ADMINISTRATION

G101.1 Purpose. The purpose of this appendix is to promote the public health, safety and general welfare and to minimize public and private losses due to flood conditions in specific *flood hazard areas* through the establishment of comprehensive regulations for management of *flood hazard areas* designed to:

1. Prevent unnecessary disruption of commerce, access and public service during times of flooding.
2. Manage the alteration of natural flood plains, stream channels and shorelines.
3. Manage filling, grading, dredging and other development that may increase flood damage or erosion potential.
4. Prevent or regulate the construction of flood barriers that will divert floodwaters or that can increase flood hazards.
5. Contribute to improved construction techniques in the flood plain.

G101.2 Objectives. The objectives of this appendix are to protect human life, minimize the expenditure of public money for flood control projects, minimize the need for rescue and relief efforts associated with flooding, minimize prolonged business interruption, minimize damage to public facilities and utilities, help maintain a stable tax base by providing for the sound use and development of flood-prone areas, contribute to improved construction techniques in the flood plain and ensure that potential owners and occupants are notified that property is within *flood hazard areas*.

G101.3 Scope. The provisions of this appendix shall apply to all proposed development in a *flood hazard area* established in Section 1612 of this code, including certain building work exempt from permit under Section 105.2.

G101.4 Violations. Any violation of a provision of this appendix, or failure to comply with a *permit* or variance issued pursuant to this appendix or any requirement of this appendix, shall be handled in accordance with Section 114.

SECTION G102 APPLICABILITY

G102.1 General. This appendix, in conjunction with this code, provides minimum requirements for development located in flood hazard areas, including:

1. The subdivision of land.
2. Site improvements and installation of utilities.
3. Placement and replacement of manufactured homes.
4. Placement of recreational vehicles.
5. New construction and repair, reconstruction, rehabilitation or additions to new construction.
6. Substantial improvement of existing buildings and structures, including restoration after damage.
7. Installation of tanks.
8. Temporary structures.
9. Temporary or permanent storage, utility and miscellaneous Group U buildings and structures.
10. Certain building work exempt from permit under Section 105.2 and other buildings and development activities.

G102.2 Establishment of flood hazard areas. *Flood hazard areas* are established in Section 1612.3 of this code, adopted by the applicable governing authority on **[INSERT DATE]**.

SECTION G103 POWERS AND DUTIES

G103.1 Permit applications. All applications for permits must comply with the following:

1. The *building official* shall review all *permit* applications to determine whether proposed development is located in *flood hazard areas* established in Section G102.2.
2. Where a proposed development site is in a *flood hazard area*, all development to which this appendix is applicable as specified in Section G102.1 shall be designed and constructed with methods, practices and materials that minimize *flood* damage and that are in accordance with this code and ASCE 24.

G103.2 Other permits. It shall be the responsibility of the *building official* to ensure that approval of a proposed development shall not be given until proof that necessary permits have been granted by federal or state agencies having jurisdiction over such development.

G103.3 Determination of design flood elevations. If design flood elevations are not specified, the *building official* is authorized to require the applicant to:

1. Obtain, review and reasonably utilize data available from a federal, state or other source; or
2. Determine the design flood elevation in accordance with accepted hydrologic and hydraulic engineering techniques. Such analyses shall be performed and sealed by a *registered design professional.* Studies, analyses and computations shall be submitted in sufficient detail to allow review and approval by the *building official.* The accuracy of data submitted for such determination shall be the responsibility of the applicant.

G103.4 Activities in riverine flood hazard areas. In riverine *flood hazard areas* where design flood elevations are specified but *floodways* have not been designated, the *building official* shall not permit any new construction, substantial improvement or other development, including fill, unless the applicant submits an engineering analysis prepared by a *registered design professional,* demonstrating that the cumulative effect of the proposed development, when combined with all other existing and anticipated *flood hazard area* encroachment, will not increase the design flood elevation more than 1 foot (305 mm) at any point within the community.

G103.5 Floodway encroachment. Prior to issuing a *permit* for any *floodway* encroachment, including fill, new construction, substantial improvements and other development or land-disturbing activity, the *building official* shall require submission of a certification, prepared by a *registered design professional,* along with supporting technical data, demonstrating that such development will not cause any increase of the base flood level.

G103.5.1 Floodway revisions. A *floodway* encroachment that increases the level of the base flood is authorized if the applicant has applied for a conditional Flood Insurance Rate Map (FIRM) revision and has received the approval of the Federal Emergency Management Agency (FEMA).

G103.6 Watercourse alteration. Prior to issuing a *permit* for any alteration or relocation of any watercourse, the *building official* shall require the applicant to provide notification of the proposal to the appropriate authorities of all affected adjacent government jurisdictions, as well as appropriate state agencies. A copy of the notification shall be maintained in the permit records and submitted to FEMA.

G103.6.1 Engineering analysis. The *building official* shall require submission of an engineering analysis, prepared by a *registered design professional,* demonstrating that the flood-carrying capacity of the altered or relocated portion of the watercourse will not be decreased. Such watercourses shall be maintained in a manner that preserves the channel's flood-carrying capacity.

G103.7 Alterations in coastal areas. Prior to issuing a *permit* for any alteration of sand dunes and mangrove stands in coastal high-hazard areas and coastal A zones, the *building official* shall require submission of an engineering analysis, prepared by a *registered design professional,* demonstrating that the proposed alteration will not increase the potential for flood damage.

G103.8 Records. The *building official* shall maintain a permanent record of all *permits* issued in *flood hazard areas,* including copies of inspection reports and certifications required in Section 1612.

G103.9 Inspections. Development for which a *permit* under this appendix is required shall be subject to inspection. The *building official* or the *building official's* designee shall make, or cause to be made, inspections of all development in *flood hazard areas* authorized by issuance of a *permit* under this appendix.

SECTION G104
PERMITS

G104.1 Required. Any person, owner or owner's authorized agent who intends to conduct any development in a *flood hazard area* shall first make application to the *building official* and shall obtain the required *permit.*

G104.2 Application for permit. The applicant shall file an application in writing on a form furnished by the *building official.* Such application shall:

1. Identify and describe the development to be covered by the *permit.*
2. Describe the land on which the proposed development is to be conducted by legal description, street address or similar description that will readily identify and definitely locate the site.
3. Include a site plan showing the delineation of *flood hazard areas, floodway* boundaries, flood zones, design flood elevations, ground elevations, proposed fill and excavation and drainage patterns and facilities.
4. Include in subdivision proposals and other proposed developments with more than 50 lots or larger than 5 acres (20 234 m^2), base flood elevation data in accordance with Section 1612.3.1 if such data are not identified for the *flood hazard areas* established in Section G102.2.
5. Indicate the use and occupancy for which the proposed development is intended.
6. Be accompanied by construction documents, grading and filling plans and other information deemed appropriate by the *building official.*
7. State the valuation of the proposed work.
8. Be signed by the applicant or the applicant's authorized agent.

G104.3 Validity of permit. The issuance of a *permit* under this appendix shall not be construed to be a *permit* for, or approval of, any violation of this appendix or any other ordi-

nance of the jurisdiction. The issuance of a *permit* based on submitted documents and information shall not prevent the *building official* from requiring the correction of errors. The *building official* is authorized to prevent occupancy or use of a structure or site that is in violation of this appendix or other ordinances of this jurisdiction.

G104.4 Expiration. A *permit* shall become invalid if the proposed development is not commenced within 180 days after its issuance, or if the work authorized is suspended or abandoned for a period of 180 days after the work commences. Extensions shall be requested in writing and justifiable cause demonstrated. The *building official* is authorized to grant, in writing, one or more extensions of time, for periods not more than 180 days each.

G104.5 Suspension or revocation. The *building official* is authorized to suspend or revoke a *permit* issued under this appendix wherever the *permit* is issued in error or on the basis of incorrect, inaccurate or incomplete information, or in violation of any ordinance or code of this jurisdiction.

SECTION G105
VARIANCES

G105.1 General. The *board of appeals* established pursuant to Section 113 shall hear and decide requests for variances. The *board of appeals* shall base its determination on technical justifications, and has the right to attach such conditions to variances as it deems necessary to further the purposes and objectives of this appendix and Section 1612.

G105.2 Records. The *building official* shall maintain a permanent record of all variance actions, including justification for their issuance.

G105.3 Historic structures. A variance is authorized to be issued for the repair or rehabilitation of a historic structure upon a determination that the proposed repair or rehabilitation will not preclude the structure's continued designation as a historic structure, and the variance is the minimum necessary to preserve the historic character and design of the structure.

Exception: Within *flood hazard areas, historic structures* that do not meet one or more of the following designations:

1. Listed or preliminarily determined to be eligible for listing in the National Register of Historic Places.
2. Determined by the Secretary of the U.S. Department of Interior as contributing to the historical significance of a registered historic district or a district preliminarily determined to qualify as an historic district.
3. Designated as *historic* under a state or local historic preservation program that is approved by the Department of Interior.

G105.4 Functionally dependent facilities. A variance is authorized to be issued for the construction or substantial improvement of a functionally dependent facility provided the criteria in Section 1612.1 are met and the variance is the minimum necessary to allow the construction or substantial improvement, and that all due consideration has been given to methods and materials that minimize flood damages during the design flood and create no additional threats to public safety.

G105.5 Restrictions. The *board of appeals* shall not issue a variance for any proposed development in a floodway if any increase in flood levels would result during the base flood discharge.

G105.6 Considerations. In reviewing applications for variances, the *board of appeals* shall consider all technical evaluations, all relevant factors, all other portions of this appendix and the following:

1. The danger that materials and debris may be swept onto other lands resulting in further injury or damage.
2. The danger to life and property due to flooding or erosion damage.
3. The susceptibility of the proposed development, including contents, to flood damage and the effect of such damage on current and future owners.
4. The importance of the services provided by the proposed development to the community.
5. The availability of alternate locations for the proposed development that are not subject to flooding or erosion.
6. The compatibility of the proposed development with existing and anticipated development.
7. The relationship of the proposed development to the comprehensive plan and flood plain management program for that area.
8. The safety of access to the property in times of flood for ordinary and emergency vehicles.
9. The expected heights, velocity, duration, rate of rise and debris and sediment transport of the floodwaters and the effects of wave action, if applicable, expected at the site.
10. The costs of providing governmental services during and after flood conditions including maintenance and repair of public utilities and facilities such as sewer, gas, electrical and water systems, streets and bridges.

G105.7 Conditions for issuance. Variances shall only be issued by the *board of appeals* where all of the following criteria are met:

1. A technical showing of good and sufficient cause that the unique characteristics of the size, configuration or topography of the site renders the elevation standards inappropriate.
2. A determination that failure to grant the variance would result in exceptional hardship by rendering the lot undevelopable.
3. A determination that the granting of a variance will not result in increased flood heights, additional threats to public safety, extraordinary public expense, nor create nuisances, cause fraud on or victimization of the public or conflict with existing local laws or ordinances.

4. A determination that the variance is the minimum necessary, considering the flood hazard, to afford relief.
5. Notification to the applicant in writing over the signature of the building official that the issuance of a variance to construct a structure below the base flood level will result in increased premium rates for flood insurance up to amounts as high as $25 for $100 of insurance coverage, and that such construction below the base flood level increases risks to life and property.

SECTION G201
DEFINITIONS

G201.1 General. The following words and terms shall, for the purposes of this appendix, have the meanings shown herein. Refer to Chapter 2 of this code for general definitions.

G201.2 Definitions.

DEVELOPMENT. Any man-made change to improved or unimproved real estate, including but not limited to, buildings or other structures, temporary structures, temporary or permanent storage of materials, mining, dredging, filling, grading, paving, excavations, operations and other land-disturbing activities.

FUNCTIONALLY DEPENDENT FACILITY. A facility that cannot be used for its intended purpose unless it is located or carried out in close proximity to water, such as a docking or port facility necessary for the loading or unloading of cargo or passengers, shipbuilding or ship repair. The term does not include long-term storage, manufacture, sales or service facilities.

MANUFACTURED HOME. A structure that is transportable in one or more sections, built on a permanent chassis, designed for use with or without a permanent foundation when attached to the required utilities, and constructed to the Federal Mobile Home Construction and Safety Standards and rules and regulations promulgated by the U.S. Department of Housing and Urban Development. The term also includes mobile homes, park trailers, travel trailers and similar transportable structures that are placed on a site for 180 consecutive days or longer.

MANUFACTURED HOME PARK OR SUBDIVISION. A parcel (or contiguous parcels) of land divided into two or more manufactured home lots for rent or sale.

RECREATIONAL VEHICLE. A vehicle that is built on a single chassis, 400 square feet (37.16 m^2) or less when measured at the largest horizontal projection, designed to be self-propelled or permanently towable by a light-duty truck, and designed primarily not for use as a permanent dwelling but as temporary living quarters for recreational, camping, travel or seasonal use. A recreational vehicle is ready for highway use if it is on its wheels or jacking system, is attached to the site only by quick disconnect-type utilities and security devices and has no permanently attached additions.

VARIANCE. A grant of relief from the requirements of this section that permits construction in a manner otherwise prohibited by this section where specific enforcement would result in unnecessary hardship.

VIOLATION. A development that is not fully compliant with this appendix or Section 1612, as applicable.

SECTION G301
SUBDIVISIONS

G301.1 General. Any subdivision proposal, including proposals for manufactured home parks and subdivisions, or other proposed new development in a flood hazard area shall be reviewed to verify all of the following:

1. All such proposals are consistent with the need to minimize flood damage.
2. All public utilities and facilities, such as sewer, gas, electric and water systems, are located and constructed to minimize or eliminate flood damage.
3. Adequate drainage is provided to reduce exposure to flood hazards.

G301.2 Subdivision requirements. The following requirements shall apply in the case of any proposed subdivision, including proposals for manufactured home parks and subdivisions, any portion of which lies within a *flood hazard area*:

1. The *flood hazard area*, including *floodways*, coastal high-hazard areas and coastal A zones, as appropriate, shall be delineated on tentative and final subdivision plats.
2. Design flood elevations shall be shown on tentative and final subdivision plats.
3. Residential building lots shall be provided with adequate buildable area outside the *floodway*.
4. The design criteria for utilities and facilities set forth in this appendix and appropriate International Codes shall be met.

SECTION G401
SITE IMPROVEMENT

G401.1 Development in floodways. Development or land-disturbing activity shall not be authorized in the *floodway* unless it has been demonstrated through hydrologic and hydraulic analyses performed in accordance with standard engineering practice, and prepared by a *registered design professional*, that the proposed encroachment will not result in any increase in the base flood level.

G401.2 Coastal high-hazard areas and coastal A zones. In coastal high-hazard areas and coastal A zones:

1. New buildings and buildings that are substantially improved shall only be authorized landward of the reach of mean high tide.
2. The use of fill for structural support of buildings is prohibited.

G401.3 Sewer facilities. All new or replaced sanitary sewer facilities, private sewage treatment plants (including all pumping stations and collector systems) and on-site waste disposal systems shall be designed in accordance with Chapter 7, ASCE 24, to minimize or eliminate infiltration of flood-

waters into the facilities and discharge from the facilities into floodwaters, or impairment of the facilities and systems.

G401.4 Water facilities. All new or replacement water facilities shall be designed in accordance with the provisions of Chapter 7, ASCE 24, to minimize or eliminate infiltration of floodwaters into the systems.

G401.5 Storm drainage. Storm drainage shall be designed to convey the flow of surface waters to minimize or eliminate damage to persons or property.

G401.6 Streets and sidewalks. Streets and sidewalks shall be designed to minimize potential for increasing or aggravating flood levels.

SECTION G501
MANUFACTURED HOMES

G501.1 Elevation. All new and replacement manufactured homes to be placed or substantially improved in a *flood hazard area* shall be elevated such that the lowest floor of the manufactured home is elevated to or above the design flood elevation.

G501.2 Foundations. All new and replacement manufactured homes, including substantial improvement of existing manufactured homes, shall be placed on a permanent, reinforced foundation that is designed in accordance with Section R322 of the *International Residential Code*.

G501.3 Anchoring. All new and replacement manufactured homes to be placed or substantially improved in a *flood hazard area* shall be installed using methods and practices that minimize flood damage. Manufactured homes shall be securely anchored to an adequately anchored foundation system to resist flotation, collapse and lateral movement. Methods of anchoring are authorized to include, but are not limited to, use of over-the-top or frame ties to ground anchors. This requirement is in addition to applicable state and local anchoring requirements for resisting wind forces.

G501.4 Protection of mechanical equipment and outside appliances. Mechanical equipment and outside appliances shall be elevated to or above the *design flood elevation*.

> **Exception:** Where such equipment and appliances are designed and installed to prevent water from entering or accumulating within their components and the systems are constructed to resist hydrostatic and hydrodynamic loads and stresses, including the effects of buoyancy, during the occurrence of flooding up to the elevation required by Section R322 of the *International Residential Code*, the systems and equipment shall be permitted to be located below the elevation required by Section R322 of the *International Residential Code*. Electrical wiring systems shall be permitted below the *design flood elevation* provided they conform to the provisions of NFPA 70.

G501.5 Enclosures. Fully enclosed areas below elevated manufactured homes shall comply with the requirements of Section R322 of the *International Residential Code*.

SECTION G601
RECREATIONAL VEHICLES

G601.1 Placement prohibited. The placement of recreational vehicles shall not be authorized in coastal high-hazard areas and in *floodways*.

G601.2 Temporary placement. Recreational vehicles in *flood hazard areas* shall be fully licensed and ready for highway use, and shall be placed on a site for less than 180 consecutive days.

G601.3 Permanent placement. Recreational vehicles that are not fully licensed and ready for highway use, or that are to be placed on a site for more than 180 consecutive days, shall meet the requirements of Section G501 for manufactured homes.

SECTION G701
TANKS

G701.1 Tanks. Underground and above-ground tanks shall be designed, constructed, installed and anchored in accordance with ASCE 24.

SECTION G801
OTHER BUILDING WORK

G801.1 Garages and accessory structures. Garages and accessory structures shall be designed and constructed in accordance with ASCE 24.

G801.2 Fences. Fences in floodways that may block the passage of floodwaters, such as stockade fences and wire mesh fences, shall meet the requirement of Section G103.5.

G801.3 Oil derricks. Oil derricks located in *flood hazard areas* shall be designed in conformance with the flood loads in Sections 1603.1.7 and 1612.

G801.4 Retaining walls, sidewalks and driveways. Retaining walls, sidewalks and driveways shall meet the requirements of Section 1804.4.

G801.5 Swimming pools. Swimming pools shall be designed and constructed in accordance with ASCE 24. Above-ground swimming pools, on-ground swimming pools and in-ground swimming pools that involve placement of fill in *floodways* shall also meet the requirements of Section G103.5.

G801.6 Decks, porches, and patios. Decks, porches and patios shall be designed and constructed in accordance with ASCE 24.

G801.7 Nonstructural concrete slabs in coastal high-hazard areas and coastal A zones. In coastal high-hazard areas and coastal A zones, nonstructural concrete slabs used as parking pads, enclosure floors, landings, decks, walkways, patios and similar nonstructural uses are permitted beneath or adjacent to buildings and structures provided that the concrete slabs shall be constructed in accordance with ASCE 24.

G801.8 Roads and watercourse crossings in regulated floodways. Roads and watercourse crossings that encroach into regulated *floodways*, including roads, bridges, culverts, low-water crossings and similar means for vehicles or pedestrians to travel from one side of a watercourse to the other, shall meet the requirement of Section G103.5.

SECTION G901
TEMPORARY STRUCTURES AND TEMPORARY STORAGE

G901.1 Temporary structures. Temporary structures shall be erected for a period of less than 180 days. Temporary structures shall be anchored to prevent flotation, collapse or lateral movement resulting from hydrostatic loads, including the effects of buoyancy, during conditions of the design flood. Fully enclosed temporary structures shall have flood openings that are in accordance with ASCE 24 to allow for the automatic entry and exit of floodwaters.

G901.2 Temporary storage. Temporary storage includes storage of goods and materials for a period of less than 180 days. Stored materials shall not include hazardous materials.

G901.3 Floodway encroachment. Temporary structures and temporary storage in floodways shall meet the requirements of G103.5.

SECTION G1001
UTILITY AND MISCELLANEOUS GROUP U

G1001.1 Utility and miscellaneous Group U. Utility and miscellaneous Group U includes buildings that are accessory in character and miscellaneous structures not classified in any specific occupancy in this code, including, but not limited to, agricultural buildings, aircraft hangars (accessory to a one- or two-family residence), barns, carports, fences more than 6 feet (1829 mm) high, grain silos (accessory to a residential occupancy), greenhouses, livestock shelters, private garages, retaining walls, sheds, stables and towers.

G1001.2 Flood loads. Utility and miscellaneous Group U buildings and structures, including substantial improvement of such buildings and structures, shall be anchored to prevent flotation, collapse or lateral movement resulting from flood loads, including the effects of buoyancy, during conditions of the design flood.

G1001.3 Elevation. Utility and miscellaneous Group U buildings and structures, including substantial improvement of such buildings and structures, shall be elevated such that the lowest floor, including basement, is elevated to or above the design flood elevation in accordance with Section 1612 of this code.

G1001.4 Enclosures below design flood elevation. Fully enclosed areas below the design flood elevation shall be constructed in accordance with ASCE 24.

G1001.5 Flood-damage-resistant materials. Flood-damage-resistant materials shall be used below the design flood elevation.

G1001.6 Protection of mechanical, plumbing and electrical systems. Mechanical, plumbing and electrical systems, including plumbing fixtures, shall be elevated to or above the design flood elevation.

Exception: Electrical systems, equipment and components; heating, ventilating, air conditioning and plumbing appliances; plumbing fixtures, duct systems and other service equipment shall be permitted to be located below the design flood elevation provided that they are designed and installed to prevent water from entering or accumulating within the components and to resist hydrostatic and hydrodynamic loads and stresses, including the effects of buoyancy, during the occurrence of flooding to the design flood elevation in compliance with the flood-resistant construction requirements of this code. Electrical wiring systems shall be permitted to be located below the design flood elevation provided they conform to the provisions of NFPA 70.

SECTION G1101
REFERENCED STANDARDS

ASCE 24—13	Flood Resistant Design and Construction	G103.1, G401.3, G401.4, G701.1, G801.1, G801.5, G801.6, G801.7, G901.1, G1001.4
HUD 24 CFR Part 3280 (2008)	Manufactured Home Construction and Safety Standards	G201
IBC—15	*International Building Code*	G102.2, G1001.1, G1001.3
IRC—15	*International Residential Code*	G501.2, G501.4, G501.5
NFPA 70—11	*National Electrical Code*	G501.4, G1001.6

APPENDIX H

SIGNS

The provisions contained in this appendix are not mandatory unless specifically referenced in the adopting ordinance.

SECTION H101
GENERAL

H101.1 General. A sign shall not be erected in a manner that would confuse or obstruct the view of or interfere with exit signs required by Chapter 10 or with official traffic signs, signals or devices. Signs and sign support structures, together with their supports, braces, guys and anchors, shall be kept in repair and in proper state of preservation. The display surfaces of signs shall be kept neatly painted or posted at all times.

H101.2 Signs exempt from permits. The following signs are exempt from the requirements to obtain a *permit* before erection:

1. Painted nonilluminated signs.
2. Temporary signs announcing the sale or rent of property.
3. Signs erected by transportation authorities.
4. Projecting signs not exceeding 2.5 square feet (0.23 m^2).
5. The changing of moveable parts of an approved sign that is designed for such changes, or the repainting or repositioning of display matter shall not be deemed an alteration.

SECTION H102
DEFINITIONS

H102.1 General. The following words and terms shall, for the purposes of this appendix, have the meanings shown herein. Refer to Chapter 2 of this code for general definitions.

COMBINATION SIGN. A sign incorporating any combination of the features of pole, projecting and roof signs.

DISPLAY SIGN. The area made available by the sign structure for the purpose of displaying the advertising message.

ELECTRIC SIGN. A sign containing electrical wiring, but not including signs illuminated by an exterior light source.

GROUND SIGN. A billboard or similar type of sign that is supported by one or more uprights, poles or braces in or upon the ground other than a combination sign or pole sign, as defined by this code.

POLE SIGN. A sign wholly supported by a sign structure in the ground.

PORTABLE DISPLAY SURFACE. A display surface temporarily fixed to a standardized advertising structure that is regularly moved from structure to structure at periodic intervals.

PROJECTING SIGN. A sign other than a wall sign that projects from and is supported by a wall of a building or structure.

ROOF SIGN. A sign erected on or above a roof or parapet of a building or structure.

SIGN. Any letter, figure, character, mark, plane, point, marquee sign, design, poster, pictorial, picture, stroke, stripe, line, trademark, reading matter or illuminated service, which shall be constructed, placed, attached, painted, erected, fastened or manufactured in any manner whatsoever, so that the same shall be used for the attraction of the public to any place, subject, person, firm, corporation, public performance, article, machine or merchandise, whatsoever, which is displayed in any manner outdoors. Every sign shall be classified and conform to the requirements of that classification as set forth in this chapter.

SIGN STRUCTURE. Any structure that supports or is capable of supporting a sign as defined in this code. A sign structure is permitted to be a single pole and is not required to be an integral part of the building.

WALL SIGN. Any sign attached to or erected against the wall of a building or structure, with the exposed face of the sign in a plane parallel to the plane of said wall.

SECTION H103
LOCATION

H103.1 Location restrictions. Signs shall not be erected, constructed or maintained so as to obstruct any fire escape or any window or door or opening used as a *means of egress* or so as to prevent free passage from one part of a roof to any other part thereof. A sign shall not be attached in any form, shape or manner to a fire escape, nor be placed in such manner as to interfere with any opening required for ventilation.

SECTION H104
IDENTIFICATION

H104.1 Identification. Every outdoor advertising display sign hereafter erected, constructed or maintained, for which a permit is required, shall be plainly marked with the name of the person, firm or corporation erecting and maintaining such sign and shall have affixed on the front thereof the permit number issued for said sign or other method of identification *approved* by the *building official*.

SECTION H105
DESIGN AND CONSTRUCTION

H105.1 General requirements. Signs shall be designed and constructed to comply with the provisions of this code for use of materials, loads and stresses.

H105.2 Permits, drawings and specifications. Where a permit is required, as provided in Chapter 1, construction documents shall be required. These documents shall show the dimensions, material and required details of construction, including loads, stresses and anchors.

H105.3 Wind load. Signs shall be designed and constructed to withstand wind pressure as provided for in Chapter 16.

H105.4 Seismic load. Signs designed to withstand wind pressures shall be considered capable of withstanding earthquake loads, except as provided for in Chapter 16.

H105.5 Working stresses. In outdoor advertising display signs, the allowable working stresses shall conform to the requirements of Chapter 16. The working stresses of wire rope and its fastenings shall not exceed 25 percent of the ultimate strength of the rope or fasteners.

Exceptions:

1. The allowable working stresses for steel and wood shall be in accordance with the provisions of Chapters 22 and 23.
2. The working strength of chains, cables, guys or steel rods shall not exceed one-fifth of the ultimate strength of such chains, cables, guys or steel.

H105.6 Attachment. Signs attached to masonry, concrete or steel shall be safely and securely fastened by means of metal anchors, bolts or approved expansion screws of sufficient size and anchorage to safely support the loads applied.

SECTION H106
ELECTRICAL

H106.1 Illumination. A sign shall not be illuminated by other than electrical means, and electrical devices and wiring shall be installed in accordance with the requirements of NFPA 70. Any open spark or flame shall not be used for display purposes unless specifically approved.

H106.1.1 Internally illuminated signs. Except as provided for in Sections 402.16 and 2611, where internally illuminated signs have facings of wood or approved plastic, the area of such facing section shall be not more than 120 square feet (11.16 m^2) and the wiring for electric lighting shall be entirely enclosed in the sign cabinet with a clearance of not less than 2 inches (51 mm) from the facing material. The dimensional limitation of 120 square feet (11.16 m^2) shall not apply to sign facing sections made from flame-resistant-coated fabric (ordinarily known as "flexible sign face plastic") that weighs less than 20 ounces per square yard (678 g/m^2) and that, when tested in accordance with NFPA 701, meets the fire propagation performance requirements of both Test 1 and Test 2 or that, when tested in accordance with an approved test method, exhibits an average burn time of 2 seconds or less and a burning extent of 5.9 inches (150 mm) or less for 10 specimens.

H106.2 Electrical service. Signs that require electrical service shall comply with NFPA 70.

SECTION H107
COMBUSTIBLE MATERIALS

H107.1 Use of combustibles. Wood, approved plastic or plastic veneer panels as provided for in Chapter 26, or other materials of combustible characteristics similar to wood, used for moldings, cappings, nailing blocks, letters and latticing, shall comply with Section H109.1 and shall not be used for other ornamental features of signs, unless approved.

H107.1.1 Plastic materials. Notwithstanding any other provisions of this code, plastic materials that burn at a rate no faster than 2.5 inches per minute (64 mm/s) when tested in accordance with ASTM D 635 shall be deemed approved plastics and can be used as the display surface material and for the letters, decorations and facings on signs and outdoor display structures.

H107.1.2 Electric sign faces. Individual plastic facings of electric signs shall not exceed 200 square feet (18.6 m^2) in area.

H107.1.3 Area limitation. If the area of a display surface exceeds 200 square feet (18.6 m^2), the area occupied or covered by approved plastics shall be limited to 200 square feet (18.6 m^2) plus 50 percent of the difference between 200 square feet (18.6 m^2) and the area of display surface. The area of plastic on a display surface shall not in any case exceed 1,100 square feet (102 m^2).

H107.1.4 Plastic appurtenances. Letters and decorations mounted on an approved plastic facing or display surface can be made of approved plastics.

SECTION H108
ANIMATED DEVICES

H108.1 Fail-safe device. Signs that contain moving sections or ornaments shall have fail-safe provisions to prevent the section or ornament from releasing and falling or shifting its center of gravity more than 15 inches (381 mm). The fail-safe device shall be in addition to the mechanism and the mechanism's housing that operate the movable section or ornament. The fail-safe device shall be capable of supporting the full dead weight of the section or ornament when the moving mechanism releases.

SECTION H109
GROUND SIGNS

H109.1 Height restrictions. The structural frame of ground signs shall not be erected of combustible materials to a height of more than 35 feet (10 668 mm) above the ground. Ground signs constructed entirely of noncombustible material shall not be erected to a height of greater than 100 feet (30 480 mm) above the ground. Greater heights are permitted where

approved and located so as not to create a hazard or danger to the public.

H109.2 Required clearance. The bottom coping of every ground sign shall be not less than 3 feet (914 mm) above the ground or street level, which space can be filled with platform decorative trim or light wooden construction.

H109.3 Wood anchors and supports. Where wood anchors or supports are embedded in the soil, the wood shall be pressure treated with an approved preservative.

SECTION H110
ROOF SIGNS

H110.1 General. Roof signs shall be constructed entirely of metal or other approved noncombustible material except as provided for in Sections H106.1.1 and H107.1. Provisions shall be made for electric grounding of metallic parts. Where combustible materials are permitted in letters or other ornamental features, wiring and tubing shall be kept free and insulated therefrom. Roof signs shall be so constructed as to leave a clear space of not less than 6 feet (1829 mm) between the roof level and the lowest part of the sign and shall have at least 5 feet (1524 mm) clearance between the vertical supports thereof. No portion of any roof sign structure shall project beyond an exterior wall.

Exception: Signs on flat roofs with every part of the roof accessible.

H110.2 Bearing plates. The bearing plates of roof signs shall distribute the load directly to or upon masonry walls, steel roof girders, columns or beams. The building shall be designed to avoid overstress of these members.

H110.3 Height of solid signs. A roof sign having a solid surface shall not exceed, at any point, a height of 24 feet (7315 mm) measured from the roof surface.

H110.4 Height of open signs. Open roof signs in which the uniform open area is not less than 40 percent of total gross area shall not exceed a height of 75 feet (22 860 mm) on buildings of Type 1 or Type 2 construction. On buildings of other construction types, the height shall not exceed 40 feet (12 192 mm). Such signs shall be thoroughly secured to the building upon which they are installed, erected or constructed by iron, metal anchors, bolts, supports, chains, stranded cables, steel rods or braces and they shall be maintained in good condition.

H110.5 Height of closed signs. A closed roof sign shall not be erected to a height greater than 50 feet (15 240 mm) above the roof of buildings of Type 1 or Type 2 construction or more than 35 feet (10 668 mm) above the roof of buildings of Type 3, 4 or 5 construction.

SECTION H111
WALL SIGNS

H111.1 Materials. Wall signs that have an area exceeding 40 square feet (3.72 m^2) shall be constructed of metal or other approved noncombustible material, except for nailing rails and as provided for in Sections H106.1.1 and H107.1.

H111.2 Exterior wall mounting details. Wall signs attached to *exterior walls* of solid masonry, concrete or stone shall be safely and securely attached by means of metal anchors, bolts or expansion screws of not less than $^3/_8$ inch (9.5 mm) diameter and shall be embedded at least 5 inches (127 mm). Wood blocks shall not be used for anchorage, except in the case of wall signs attached to buildings with walls of wood. A wall sign shall not be supported by anchorages secured to an unbraced parapet wall.

H111.3 Extension. Wall signs shall not extend above the top of the wall or beyond the ends of the wall to which the signs are attached unless such signs conform to the requirements for roof signs, projecting signs or ground signs.

SECTION H112
PROJECTING SIGNS

H112.1 General. Projecting signs shall be constructed entirely of metal or other noncombustible material and securely attached to a building or structure by metal supports such as bolts, anchors, supports, chains, guys or steel rods. Staples or nails shall not be used to secure any projecting sign to any building or structure. The *dead load* of projecting signs not parallel to the building or structure and the load due to wind pressure shall be supported with chains, guys or steel rods having net cross-sectional dimension of not less than $^3/_8$ inch (9.5 mm) diameter. Such supports shall be erected or maintained at an angle of at least 45 percent (0.78 rad) with the horizontal to resist the *dead load* and at angle of 45 percent (0.78 rad) or more with the face of the sign to resist the specified wind pressure. If such projecting sign exceeds 30 square feet (2.8 m^2) in one facial area, there shall be provided at least two such supports on each side not more than 8 feet (2438 mm) apart to resist the wind pressure.

H112.2 Attachment of supports. Supports shall be secured to a bolt or expansion screw that will develop the strength of the supporting chains, guys or steel rods, with a minimum $^5/_8$-inch (15.9 mm) bolt or lag screw, by an expansion shield. Turnbuckles shall be placed in chains, guys or steel rods supporting projecting signs.

H112.3 Wall mounting details. Chains, cables, guys or steel rods used to support the live or dead load of projecting signs are permitted to be fastened to solid masonry walls with expansion bolts or by machine screws in iron supports, but such supports shall not be attached to an unbraced parapet wall. Where the supports must be fastened to walls made of wood, the supporting anchor bolts must go through the wall and be plated or fastened on the inside in a secure manner.

H112.4 Height limitation. A projecting sign shall not be erected on the wall of any building so as to project above the roof or cornice wall or above the roof level where there is no cornice wall; except that a sign erected at a right angle to the building, the horizontal width of which sign is perpendicular to such a wall and does not exceed 18 inches (457 mm), is permitted to be erected to a height not exceeding 2 feet (610 mm) above the roof or cornice wall or above the roof level where there is no cornice wall. A sign attached to a corner of a building and parallel to the vertical line of such corner shall be deemed to be erected at a right angle to the building wall.

H112.5 Additional loads. Projecting sign structures that will be used to support an individual on a ladder or other servicing device, whether or not specifically designed for the servicing device, shall be capable of supporting the anticipated additional load, but not less than a 100-pound (445 N) concentrated horizontal load and a 300-pound (1334 N) concentrated vertical load applied at the point of assumed or most eccentric loading. The building component to which the projecting sign is attached shall also be designed to support the additional loads.

SECTION H113
MARQUEE SIGNS

H113.1 Materials. Marquee signs shall be constructed entirely of metal or other approved noncombustible material except as provided for in Sections H106.1.1 and H107.1.

H113.2 Attachment. Marquee signs shall be attached to approved marquees that are constructed in accordance with Section 3106.

H113.3 Dimensions. Marquee signs, whether on the front or side, shall not project beyond the perimeter of the marquee.

H113.4 Height limitation. Marquee signs shall not extend more than 6 feet (1829 mm) above, nor 1 foot (305 mm) below such marquee, but under no circumstances shall the sign or signs have a vertical dimension greater than 8 feet (2438 mm).

SECTION H114
PORTABLE SIGNS

H114.1 General. Portable signs shall conform to requirements for ground, roof, projecting, flat and temporary signs where such signs are used in a similar capacity. The requirements of this section shall not be construed to require portable signs to have connections to surfaces, tie-downs or foundations where provisions are made by temporary means or configuration of the structure to provide stability for the expected duration of the installation.

TABLE 4-A
SIZE, THICKNESS AND TYPE OF GLASS PANELS IN SIGNS

MAXIMUM SIZE OF EXPOSED PANEL		MINIMUM THICKNESS OF GLASS (inches)	TYPE OF GLASS
Any dimension (inches)	Area (square inches)		
30	500	$^1/_8$	Plain, plate or wired
45	700	$^3/_{16}$	Plain, plate or wired
144	3,600	$^1/_4$	Plain, plate or wired
> 144	> 3,600	$^1/_4$	Wired glass

For SI: 1 inch = 25.4 mm, 1 square inch = 645.16 mm^2.

TABLE 4-B
THICKNESS OF PROJECTION SIGN

PROJECTION (feet)	MAXIMUM THICKNESS (feet)
5	2
4	2.5
3	3
2	3.5
1	4

For SI: 1 foot = 304.8 mm.

SECTION H115
REFERENCED STANDARDS

ASTM D 635—10	Test Method for Rate of Burning and/or Extent and Time of Burning of Plastics in a Horizontal Position	H107.1.1
NFPA 70—11	National Electrical Code	H106.1, H106.2
NFPA 701—10	Methods of Fire Test for Flame Propagation of Textiles and Films	H106.1.1

APPENDIX I

PATIO COVERS

The provisions contained in this appendix are not mandatory unless specifically referenced in the adopting ordinance.

SECTION I101
GENERAL

I101.1 General. Patio covers shall be permitted to be detached from or attached to *dwelling units*. Patio covers shall be used only for recreational, outdoor living purposes and not as carports, garages, storage rooms or habitable rooms.

SECTION I102
DEFINITION

I102.1 General. The following term shall, for the purposes of this appendix, have the meaning shown herein. Refer to Chapter 2 of this code for general definitions.

PATIO COVER. A structure with open or glazed walls that is used for recreational, outdoor living purposes associated with a *dwelling unit.*

SECTION I103
EXTERIOR WALLS AND OPENINGS

I103.1 Enclosure walls. Enclosure walls shall be permitted to be of any configuration, provided the open or glazed area of the longer wall and one additional wall is equal to at least 65 percent of the area below a minimum of 6 feet 8 inches (2032 mm) of each wall, measured from the floor. Openings shall be permitted to be enclosed with insect screening, approved translucent or transparent plastic not more than 0.125 inch (3.2 mm) in thickness, glass conforming to the provisions of Chapter 24 or any combination of the foregoing.

I103.2 Light, ventilation and emergency egress. Exterior openings of the *dwelling unit* required for light and ventilation shall be permitted to open into a patio structure. However, the patio structure shall be unenclosed if such openings are serving as emergency egress or rescue openings from sleeping rooms. Where such exterior openings serve as an exit from the dwelling unit, the patio structure, unless unenclosed, shall be provided with exits conforming to the provision of Chapter 10.

SECTION I104
HEIGHT

I104.1 Height. Patio covers shall be limited to one-story structures not more than 12 feet (3657 mm) in height.

SECTION I105
STRUCTURAL PROVISIONS

I105.1 Design loads. Patio covers shall be designed and constructed to sustain, within the stress limits of this code, all *dead loads* plus a minimum vertical live load of 10 pounds per square foot (0.48 kN/m^2) except that snow loads shall be used where such snow loads exceed this minimum. Such patio covers shall be designed to resist the minimum wind and seismic loads set forth in this code.

I105.2 Footings. In areas with a frost depth of zero, a patio cover shall be permitted to be supported on a concrete slab on grade without footings, provided the slab conforms to the provisions of Chapter 19 of this code, is not less than $3^1/_2$ inches (89 mm) thick and further provided that the columns do not support loads in excess of 750 pounds (3.36 kN) per column.

APPENDIX J

GRADING

The provisions contained in this appendix are not mandatory unless specifically referenced in the adopting ordinance.

User note: Code change proposals to this chapter will be considered by the IBC – Structural Code Development Committee during the 2016 (Group B) Code Development Cycle. See explanation on page iv.

SECTION J101
GENERAL

J101.1 Scope. The provisions of this chapter apply to grading, excavation and earthwork construction, including fills and embankments. Where conflicts occur between the technical requirements of this chapter and the geotechnical report, the geotechnical report shall govern.

J101.2 Flood hazard areas. Unless the applicant has submitted an engineering analysis, prepared in accordance with standard engineering practice by a *registered design professional,* that demonstrates the proposed work will not result in any increase in the level of the base flood, grading, excavation and earthwork construction, including fills and embankments, shall not be permitted in *floodways* that are in *flood hazard areas* established in Section 1612.3 or in *flood hazard areas* where design flood elevations are specified but *floodways* have not been designated.

SECTION J102
DEFINITIONS

J102.1 Definitions. The following words and terms shall, for the purposes of this appendix, have the meanings shown herein. Refer to Chapter 2 of this code for general definitions.

BENCH. A relatively level step excavated into earth material on which fill is to be placed.

COMPACTION. The densification of a fill by mechanical means.

CUT. See "Excavation."

DOWN DRAIN. A device for collecting water from a swale or ditch located on or above a slope, and safely delivering it to an approved drainage facility.

EROSION. The wearing away of the ground surface as a result of the movement of wind, water or ice.

EXCAVATION. The removal of earth material by artificial means, also referred to as a cut.

FILL. Deposition of earth materials by artificial means.

GRADE. The vertical location of the ground surface.

GRADE, EXISTING. The grade prior to grading.

GRADE, FINISHED. The grade of the site at the conclusion of all grading efforts.

GRADING. An excavation or fill or combination thereof.

KEY. A compacted fill placed in a trench excavated in earth material beneath the toe of a slope.

SLOPE. An inclined surface, the inclination of which is expressed as a ratio of horizontal distance to vertical distance.

TERRACE. A relatively level step constructed in the face of a graded slope for drainage and maintenance purposes.

SECTION J103
PERMITS REQUIRED

J103.1 Permits required. Except as exempted in Section J103.2, no grading shall be performed without first having obtained a *permit* therefor from the *building official.* A grading *permit* does not include the construction of retaining walls or other structures.

J103.2 Exemptions. A grading *permit* shall not be required for the following:

1. Grading in an isolated, self-contained area, provided there is no danger to the public and that such grading will not adversely affect adjoining properties.
2. Excavation for construction of a structure permitted under this code.
3. Cemetery graves.
4. Refuse disposal sites controlled by other regulations.
5. Excavations for wells, or trenches for utilities.
6. Mining, quarrying, excavating, processing or stockpiling rock, sand, gravel, aggregate or clay controlled by other regulations, provided such operations do not affect the lateral support of, or significantly increase stresses in, soil on adjoining properties.
7. Exploratory excavations performed under the direction of a *registered design professional.*

Exemption from the *permit* requirements of this appendix shall not be deemed to grant authorization for any work to be done in any manner in violation of the provisions of this code or any other laws or ordinances of this jurisdiction.

SECTION J104
PERMIT APPLICATION AND SUBMITTALS

J104.1 Submittal requirements. In addition to the provisions of Section 105.3, the applicant shall state the estimated quantities of excavation and fill.

J104.2 Site plan requirements. In addition to the provisions of Section 107, a grading plan shall show the existing grade and finished grade in contour intervals of sufficient clarity to indicate the nature and extent of the work and show in detail that it complies with the requirements of this code. The plans shall show the existing grade on adjoining properties in sufficient detail to identify how grade changes will conform to the requirements of this code.

J104.3 Geotechnical report. A geotechnical report prepared by a *registered design professional* shall be provided. The report shall contain at least the following:

1. The nature and distribution of existing soils.
2. Conclusions and recommendations for grading procedures.
3. Soil design criteria for any structures or embankments required to accomplish the proposed grading.
4. Where necessary, slope stability studies, and recommendations and conclusions regarding site geology.

Exception: A geotechnical report is not required where the *building official* determines that the nature of the work applied for is such that a report is not necessary.

J104.4 Liquefaction study. For sites with mapped maximum considered earthquake spectral response accelerations at short periods (S_s) greater than 0.5g as determined by Section 1613, a study of the liquefaction potential of the site shall be provided and the recommendations incorporated in the plans.

Exception: A liquefaction study is not required where the *building official* determines from established local data that the liquefaction potential is low.

SECTION J105
INSPECTIONS

J105.1 General. Inspections shall be governed by Section 110 of this code.

J105.2 Special inspections. The *special inspection* requirements of Section 1705.6 shall apply to work performed under a grading permit where required by the *building official.*

SECTION J106
EXCAVATIONS

J106.1 Maximum slope. The slope of cut surfaces shall be no steeper than is safe for the intended use, and shall be not more than one unit vertical in two units horizontal (50-percent slope) unless the owner or the owner's authorized agent furnishes a geotechnical report justifying a steeper slope.

Exceptions:

1. A cut surface shall be permitted to be at a slope of 1.5 units horizontal to one unit vertical (67-percent slope) provided that all of the following are met:
   - 1.1. It is not intended to support structures or surcharges.
   - 1.2. It is adequately protected against erosion.
   - 1.3. It is no more than 8 feet (2438 mm) in height.
   - 1.4. It is approved by the building code official.
   - 1.5. Ground water is not encountered.
2. A cut surface in bedrock shall be permitted to be at a slope of one unit horizontal to one unit vertical (100-percent slope).

SECTION J107
FILLS

J107.1 General. Unless otherwise recommended in the geotechnical report, fills shall comply with the provisions of this section.

J107.2 Surface preparation. The ground surface shall be prepared to receive fill by removing vegetation, topsoil and other unsuitable materials, and scarifying the ground to provide a bond with the fill material.

J107.3 Benching. Where existing grade is at a slope steeper than one unit vertical in five units horizontal (20-percent slope) and the depth of the fill exceeds 5 feet (1524 mm) benching shall be provided in accordance with Figure J107.3. A key shall be provided that is at least 10 feet (3048 mm) in width and 2 feet (610 mm) in depth.

J107.4 Fill material. Fill material shall not include organic, frozen or other deleterious materials. No rock or similar irreducible material greater than 12 inches (305 mm) in any dimension shall be included in fills.

J107.5 Compaction. All fill material shall be compacted to 90 percent of maximum density as determined by ASTM D 1557, Modified Proctor, in lifts not exceeding 12 inches (305 mm) in depth.

J107.6 Maximum slope. The slope of fill surfaces shall be no steeper than is safe for the intended use. Fill slopes steeper than one unit vertical in two units horizontal (50-percent slope) shall be justified by a geotechnical report or engineering data.

SECTION J108
SETBACKS

J108.1 General. Cut and fill slopes shall be set back from the property lines in accordance with this section. Setback dimensions shall be measured perpendicular to the property line and shall be as shown in Figure J108.1, unless substantiating data is submitted justifying reduced setbacks.

J108.2 Top of slope. The setback at the top of a cut slope shall be not less than that shown in Figure J108.1, or than is required to accommodate any required interceptor drains, whichever is greater.

J108.3 Slope protection. Where required to protect adjacent properties at the toe of a slope from adverse effects of the grading, additional protection, approved by the *building official*, shall be included. Such protection may include but shall not be limited to:

1. Setbacks greater than those required by Figure J108.1.

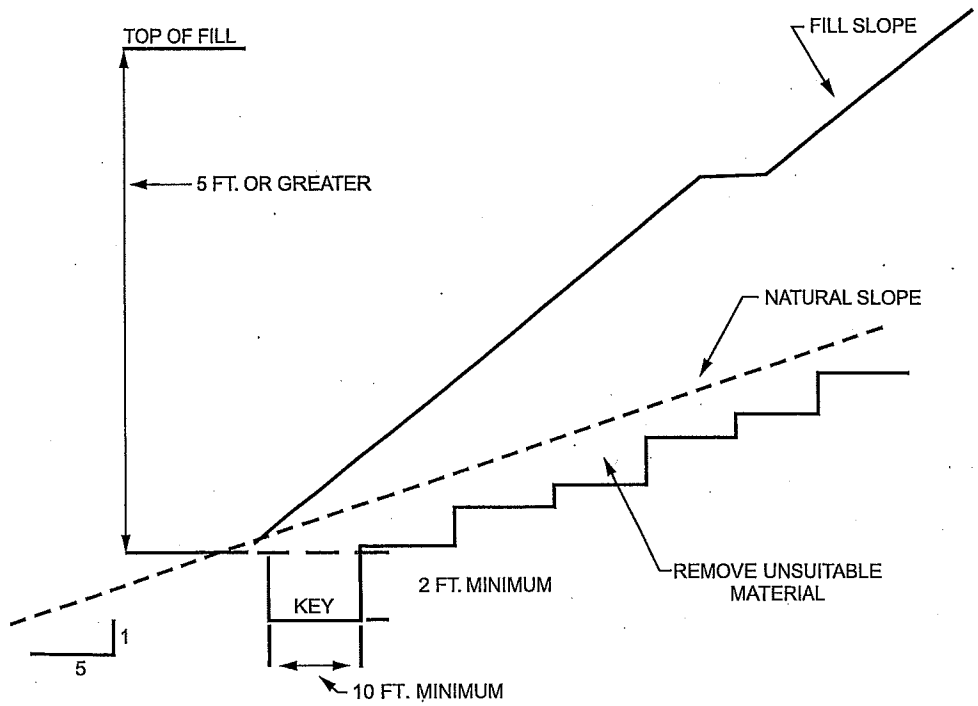

For SI: 1 foot = 304.8 mm.

FIGURE J107.3
BENCHING DETAILS

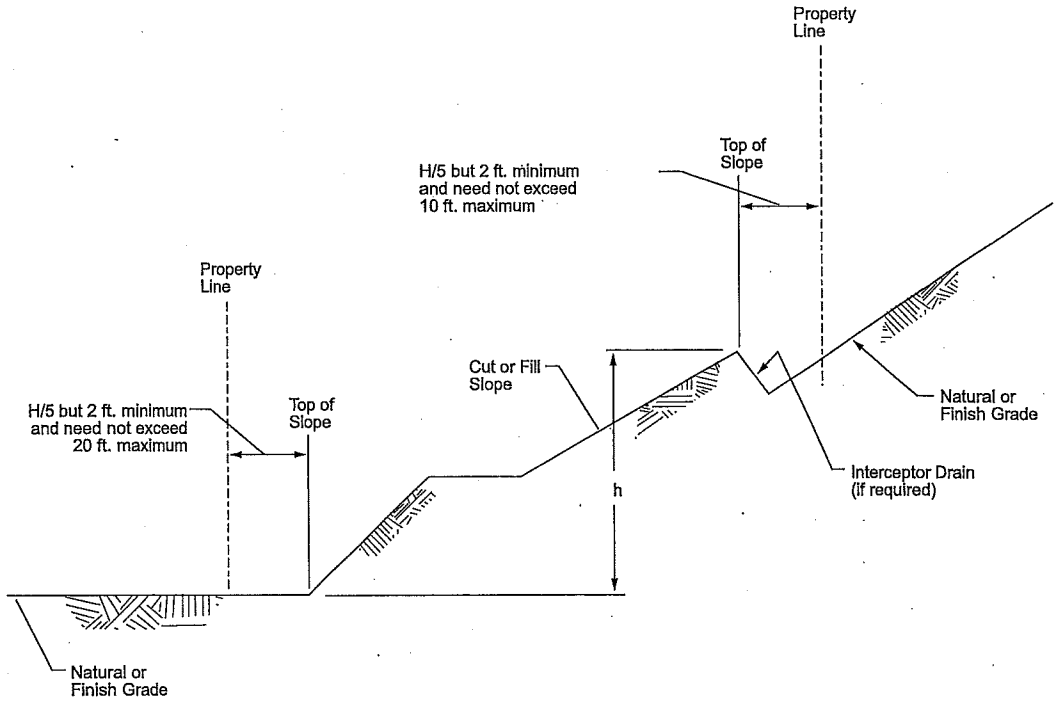

For SI: 1 foot = 304.8 mm.

FIGURE J108.1
DRAINAGE DIMENSIONS

2. Provisions for retaining walls or similar construction.
3. Erosion protection of the fill slopes.
4. Provision for the control of surface waters.

SECTION J109
DRAINAGE AND TERRACING

J109.1 General. Unless otherwise recommended by a *registered design professional*, drainage facilities and terracing shall be provided in accordance with the requirements of this section.

Exception: Drainage facilities and terracing need not be provided where the ground slope is not steeper than one unit vertical in three units horizontal (33-percent slope).

J109.2 Terraces. Terraces at least 6 feet (1829 mm) in width shall be established at not more than 30-foot (9144 mm) vertical intervals on all cut or fill slopes to control surface drainage and debris. Suitable access shall be provided to allow for cleaning and maintenance.

Where more than two terraces are required, one terrace, located at approximately mid-height, shall be at least 12 feet (3658 mm) in width.

Swales or ditches shall be provided on terraces. They shall have a minimum gradient of one unit vertical in 20 units horizontal (5-percent slope) and shall be paved with concrete not less than 3 inches (76 mm) in thickness, or with other materials suitable to the application. They shall have a depth not less than 12 inches (305 mm) and a width not less than 5 feet (1524 mm).

A single run of swale or ditch shall not collect runoff from a tributary area exceeding 13,500 square feet (1256 m^2) (projected) without discharging into a down drain.

J109.3 Interceptor drains. Interceptor drains shall be installed along the top of cut slopes receiving drainage from a tributary width greater than 40 feet (12 192 mm), measured horizontally. They shall have a minimum depth of 1 foot (305 mm) and a minimum width of 3 feet (915 mm). The slope shall be approved by the *building official*, but shall be not less than one unit vertical in 50 units horizontal (2-percent slope). The drain shall be paved with concrete not less than 3 inches (76 mm) in thickness, or by other materials suitable to the application. Discharge from the drain shall be accomplished in a manner to prevent erosion and shall be approved by the *building official*.

J109.4 Drainage across property lines. Drainage across property lines shall not exceed that which existed prior to grading. Excess or concentrated drainage shall be contained on site or directed to an approved drainage facility. Erosion of the ground in the area of discharge shall be prevented by installation of nonerosive down drains or other devices.

SECTION J110
EROSION CONTROL

J110.1 General. The faces of cut and fill slopes shall be prepared and maintained to control erosion. This control shall be permitted to consist of effective planting.

Exception: Erosion control measures need not be provided on cut slopes not subject to erosion due to the erosion-resistant character of the materials.

Erosion control for the slopes shall be installed as soon as practicable and prior to calling for final inspection.

J110.2 Other devices. Where necessary, check dams, cribbing, riprap or other devices or methods shall be employed to control erosion and provide safety.

SECTION J111
REFERENCED STANDARDS

ASTM D 1557-12	Test Method for Laboratory Compaction Characteristics of Soil Using Modified Effort [56,000 ft-lb/ft^3 (2,700kN-m/m^3)].	J107.5

APPENDIX K

ADMINISTRATIVE PROVISIONS

The provisions contained in this appendix are not mandatory unless specifically referenced in the adopting ordinance.

With the exception of Section K111, this appendix contains only administrative provisions that are intended to be used by a jurisdiction to implement and enforce NFPA 70, the National Electrical Code. Annex H of NFPA 70 also contains administrative and enforcement provisions, and these provisions may or may not be completely compatible with or consistent with Chapter 1 of the IBC, whereas the provisions in IBC Appendix K are compatible and consistent with Chapter 1 of the IBC and other ICC codes. Section K111 contains technical provisions that are unique to this appendix and are in addition to those of NFPA 70.

The provisions of Appendix K are specific to what might be designated as an Electrical Department of Inspection and Code Enforcement and could be implemented where other such provisions are not adopted.

SECTION K101
GENERAL

K101.1 Purpose. A purpose of this code is to establish minimum requirements to safeguard public health, safety and general welfare by regulating and controlling the design, construction, installation, quality of materials, location, operation and maintenance or use of electrical systems and equipment.

K101.2 Scope. This code applies to the design, construction, installation, *alteration*, repairs, relocation, replacement, *addition* to, use or maintenance of electrical systems and equipment.

SECTION K102
APPLICABILITY

K102.1 General. The provisions of this code apply to all matters affecting or relating to structures and premises, as set forth in Section K101.

K102.2 Existing installations. Except as otherwise provided for in this chapter, a provision in this code shall not require the removal, *alteration* or abandonment of, or prevent the continued utilization and maintenance of, existing electrical systems and equipment lawfully in existence at the time of the adoption of this code.

K102.3 Maintenance. Electrical systems, equipment, materials and appurtenances, both existing and new, and parts thereof shall be maintained in proper operating condition in accordance with the original design and in a safe, hazard-free condition. Devices or safeguards that are required by this code shall be maintained in compliance with the code edition under which installed. The *owner* or the *owner's* authorized agent shall be responsible for the maintenance of the electrical systems and equipment. To determine compliance with this provision, the *building official* shall have the authority to require that the electrical systems and equipment be reinspected.

K102.4 Additions, alterations and repairs. *Additions*, *alterations*, renovations and *repairs* to electrical systems and equipment shall conform to that required for new electrical systems and equipment without requiring that the existing electrical systems or equipment comply with all of the requirements of this code. *Additions*, *alterations* and *repairs* shall not cause existing electrical systems or equipment to become unsafe, hazardous or overloaded.

Minor *additions*, *alterations*, renovations and *repairs* to existing electrical systems and equipment shall meet the provisions for new construction, except where such work is performed in the same manner and arrangement as was in the existing system, is not hazardous and is *approved*.

K102.5 Subjects not regulated by this code. Where no applicable standards or requirements are set forth in this code, or are contained within other laws, codes, regulations, ordinances or bylaws adopted by the jurisdiction, compliance with applicable standards of nationally recognized standards as are *approved* shall be deemed as prima facie evidence of compliance with the intent of this code. Nothing herein shall derogate from the authority of the *building official* to determine compliance with codes or standards for those activities or installations within the building official's jurisdiction or responsibility.

SECTION K103
PERMITS

K103.1 Types of permits. An *owner*, authorized agent or contractor who desires to construct, enlarge, alter, *repair*, move, demolish or change the occupancy of a building or structure, or to erect, install, enlarge, alter, *repair*, remove, convert or replace electrical systems or equipment, the installation of which is regulated by this code, or to cause such work to be done, shall first make application to the *building official* and obtain the required *permit* for the work.

Exception: Where *repair* or replacement of electrical systems or equipment must be performed in an emergency situation, the *permit* application shall be submitted within the next working business day of the department of electrical inspection.

K103.2 Work exempt from permit. The following work shall be exempt from the requirement for a *permit*:

1. Listed cord- and plug-connected temporary decorative lighting.
2. Reinstallation of attachment plug receptacles, but not the outlets therefor.

3. Replacement of branch circuit overcurrent devices of the required capacity in the same location.
4. Temporary wiring for experimental purposes in suitable experimental laboratories.
5. Electrical wiring, devices, appliances, apparatus or equipment operating at less than 25 volts and not capable of supplying more than 50 watts of energy.

Exemption from the permit requirements of this code shall not be deemed to grant authorization for work to be done in violation of the provisions of this code or other laws or ordinances of this jurisdiction.

SECTION K104
CONSTRUCTION DOCUMENTS

K104.1 Information on construction documents. *Construction documents* shall be drawn to scale upon suitable material. Electronic media documents are permitted to be submitted where *approved* by the *building official*. *Construction documents* shall be of sufficient clarity to indicate the location, nature and extent of the work proposed and show in detail that such work will conform to the provisions of this code and relevant laws, ordinances, rules and regulations, as determined by the *building official*.

K104.2 Penetrations. *Construction documents* shall indicate where penetrations will be made for electrical systems and shall indicate the materials and methods for maintaining required structural safety, *fire-resistance rating* and *fireblocking*.

K104.3 Load calculations. Where an *addition* or *alteration* is made to an existing electrical system, an electrical load calculation shall be prepared to determine if the existing electrical service has the capacity to serve the added load.

SECTION K105
ALTERNATIVE ENGINEERED DESIGN

K105.1 General. The design, documentation, inspection, testing and approval of an alternative engineered design electrical system shall comply with this section.

K105.2 Design criteria. An alternative engineered design shall conform to the intent of the provisions of this code and shall provide an equivalent level of quality, strength, effectiveness, *fire resistance*, durability and safety. Materials, equipment or components shall be designed and installed in accordance with the manufacturer's instructions.

K105.3 Submittal. The *registered design professional* shall indicate on the *permit* application that the electrical system is an alternative engineered design. The *permit* and permanent *permit* records shall indicate that an alternative engineered design was part of the *approved* installation.

K105.4 Technical data. The *registered design professional* shall submit sufficient technical data to substantiate the proposed alternative engineered design and to prove that the performance meets the intent of this code.

K105.5 Construction documents. The *registered design professional* shall submit to the *building official* two complete sets of signed and sealed *construction documents* for the alternative engineered design. The *construction documents* shall include floor plans and a diagram of the work.

K105.6 Design approval. Where the *building official* determines that the alternative engineered design conforms to the intent of this code, the electrical system shall be *approved*. If the alternative engineered design is not *approved*, the *building official* shall notify the *registered design professional* in writing, stating the reasons therefor.

K105.7 Inspection and testing. The alternative engineered design shall be tested and inspected in accordance with the requirements of this code.

SECTION K106
REQUIRED INSPECTIONS

K106.1 General. The *building official*, upon notification, shall make the inspections set forth in this section.

K106.2 Underground. Underground inspection shall be made after trenches or ditches are excavated and bedded, piping and conductors installed, and before backfill is put in place. Where excavated soil contains rocks, broken concrete, frozen chunks and other rubble that would damage or break the raceway, cable or conductors, or where corrosive action will occur, protection shall be provided in the form of granular or selected material, *approved* running boards, sleeves or other means.

K106.3 Rough-in. Rough-in inspection shall be made after the roof, framing, *fireblocking* and bracing are in place and all wiring and other components to be concealed are complete, and prior to the installation of wall or ceiling membranes.

K106.4 Contractors' responsibilities. It shall be the responsibility of every contractor who enters into contracts for the installation or repair of electrical systems for which a *permit* is required to comply with adopted state and local rules and regulations concerning licensing.

SECTION K107
PREFABRICATED CONSTRUCTION

K107.1 Prefabricated construction. Prefabricated construction is subject to Sections K107.2 through K107.5.

K107.2 Evaluation and follow-up inspection services. Prior to the approval of a prefabricated construction assembly having concealed electrical work and the issuance of an electrical *permit*, the *building official* shall require the submittal of an evaluation report on each prefabricated construction assembly, indicating the complete details of the electrical system, including a description of the system and its components, the basis upon which the system is being evaluated, test results and similar information, and other data as necessary for the *building official* to determine conformance to this code.

K107.3 Evaluation service. The *building official* shall designate the evaluation service of an *approved* agency as the evaluation agency and review such agency's evaluation report for adequacy and conformance to this code.

K107.4 Follow-up inspection. Except where ready access is provided to electrical systems, service equipment and accessories for complete inspection at the site without disassembly or dismantling, the *building official* shall conduct the in-plant inspections as frequently as necessary to ensure conformance to the *approved* evaluation report or shall designate an independent, *approved* inspection agency to conduct such inspections. The inspection agency shall furnish the *building official* with the follow-up inspection manual and a report of inspections upon request, and the electrical system shall have an identifying label permanently affixed to the system indicating that factory inspections have been performed.

K107.5 Test and inspection records. Required test and inspection records shall be available to the *building official* at all times during the fabrication of the electrical system and the erection of the building; or such records as the *building official* designates shall be filed.

SECTION K108
TESTING

K108.1 Testing. Electrical work shall be tested as required in this code. Tests shall be performed by the *permit* holder and observed by the *building official.*

K108.1.1 Apparatus, material and labor for tests. Apparatus, material and labor required for testing an electrical system or part thereof shall be furnished by the *permit* holder.

K108.1.2 Reinspection and testing. Where any work or installation does not pass an initial test or inspection, the necessary corrections shall be made so as to achieve compliance with this code. The work or installation shall then be resubmitted to the *building official* for inspection and testing.

SECTION K109
RECONNECTION

K109.1 Connection after order to disconnect. A person shall not make utility service or energy source connections to systems regulated by this code, which have been disconnected or ordered to be disconnected by the *building official*, or the use of which has been ordered to be discontinued by the *building official* until the *building official* authorizes the reconnection and use of such systems.

SECTION K110
CONDEMNING ELECTRICAL SYSTEMS

K110.1 Authority to condemn electrical systems. Wherever the *building official* determines that any electrical system, or portion thereof, regulated by this code has become hazardous to life, health or property, the *building official* shall order in writing that such electrical systems either be removed or restored to a safe condition. A time limit for compliance with such order shall be specified in the written notice. A person shall not use or maintain a defective electrical system or equipment after receiving such notice.

Where such electrical system is to be disconnected, written notice as prescribed in this code shall be given. In cases of immediate danger to life or property, such disconnection shall be made immediately without such notice.

SECTION K111
ELECTRICAL PROVISIONS

K111.1 Adoption. Electrical systems and equipment shall be designed, constructed and installed in accordance with the *International Residential Code* or NFPA 70 as applicable, except as otherwise provided in this code.

[F] K111.2 Abatement of electrical hazards. All identified electrical hazards shall be abated. All identified hazardous electrical conditions in permanent wiring shall be brought to the attention of the *building official* responsible for enforcement of this code. Electrical wiring, devices, appliances and other equipment that is modified or damaged and constitutes an electrical shock or fire hazard shall not be used.

[F] K111.3 Appliance and fixture listing. Electrical appliances and fixtures shall be tested and *listed* in published reports of inspected electrical equipment by an *approved* agency and installed in accordance with all instructions included as part of such listing.

K111.4 Nonmetallic-sheathed cable. The use of Type NM, NMC and NMS (nonmetallic sheathed) cable wiring methods shall not be limited based on height, number of stories or construction type of the building or structure.

K111.5 Cutting, notching and boring. The cutting, notching and boring of wood and steel framing members, structural members and engineered wood products shall be in accordance with this code.

K111.6 Smoke alarm circuits. Single- and multiple-station smoke alarms required by this code and installed within *dwelling* units shall not be connected as the only load on a branch circuit. Such alarms shall be supplied by branch circuits having lighting loads consisting of lighting outlets in habitable spaces.

K111.7 Equipment and door labeling. Doors into electrical control panel rooms shall be marked with a plainly visible and legible sign stating ELECTRICAL ROOM or similar *approved* wording. The disconnecting means for each service, feeder or branch circuit originating on a switchboard or panelboard shall be legibly and durably marked to indicate its purpose unless such purpose is clearly evident.

APPENDIX L

EARTHQUAKE RECORDING INSTRUMENTATION

The provisions contained in this appendix are not mandatory unless specifically referenced in the adopting ordinance.

User note: Code change proposals to this chapter will be considered by the IBC – Structural Code Development Committee during the 2016 (Group B) Code Development Cycle. See explanation on page iv.

SECTION L101
GENERAL

L101.1 General. Every structure located where the 1-second spectral response acceleration, S_1, in accordance with Section 1613.3 is greater than 0.40 that either 1 exceeds six stories in height with an aggregate floor area of 60,000 square feet (5574 m^2) or more, or 2 exceeds 10 *stories* in height regardless of floor area, shall be equipped with not less than three approved recording accelerographs. The accelerographs shall be interconnected for common start and common timing.

L101.2 Location. As a minimum, instruments shall be located at the lowest level, mid-height, and near the top of the structure. Each instrument shall be located so that access is maintained at all times and is unobstructed by room contents. A sign stating "MAINTAIN CLEAR ACCESS TO THIS INSTRUMENT" in 1-inch (25 mm) block letters shall be posted in a conspicuous location.

L101.3 Maintenance. Maintenance and service of the instrumentation shall be provided by the owner of the structure. Data produced by the instrument shall be made available to the *building official* on request.

Maintenance and service of the instruments shall be performed annually by an approved testing agency. The owner shall file with the *building official* a written report from an approved testing agency certifying that each instrument has been serviced and is in proper working condition. This report shall be submitted when the instruments are installed and annually thereafter. Each instrument shall have affixed to it an externally visible tag specifying the date of the last maintenance or service and the printed name and address of the testing agency.

APPENDIX M

TSUNAMI-GENERATED FLOOD HAZARD

The provisions contained in this appendix are not mandatory unless specifically referenced in the adopting ordinance.

User note: Code change proposals to this chapter will be considered by the IBC – Structural Code Development Committee during the 2016 (Group B) Code Development Cycle. See explanation on page iv.

SECTION M101
TSUNAMI-GENERATED FLOOD HAZARD

M101.1 General. The purpose of this appendix is to provide tsunami regulatory criteria for those communities that have a tsunami hazard and have elected to develop and adopt a map of their tsunami hazard inundation zone.

M101.2 Definitions. The following words and terms shall, for the purposes of this appendix, have the meanings shown herein. Refer to Chapter 2 of this code for general definitions.

TSUNAMI HAZARD ZONE. The area vulnerable to being flooded or inundated by a design event tsunami as identified on a community's Tsunami Hazard Zone Map.

TSUNAMI HAZARD ZONE MAP. A map adopted by the community that designates the extent of inundation by a design event tsunami. This map shall be based on the tsunami inundation map that is developed and provided to a community by either the applicable state agency or the National Atmospheric and Oceanic Administration (NOAA) under the National Tsunami Hazard Mitigation Program, but shall be permitted to utilize a different probability or hazard level.

M101.3 Establishment of tsunami hazard zone. Where applicable, if a community has adopted a Tsunami Hazard Zone Map, that map shall be used to establish a community's tsunami hazard zone.

M101.4 Construction within the tsunami hazard zone. Construction of structures designated Risk Categories III and IV as specified under Section 1604.5 shall be prohibited within a tsunami hazard zone.

Exceptions:

1. A vertical evacuation tsunami refuge shall be permitted to be located in a tsunami hazard zone provided it is constructed in accordance with FEMA P646.
2. Community critical facilities shall be permitted to be located within the tsunami hazard zone when such a location is necessary to fulfill their function, providing suitable structural and emergency evacuation measures have been incorporated.

SECTION M102
REFERENCED STANDARDS

FEMA P646—12	Guidelines for Design of Structures for Vertical Evacuation from Tsunamis	M101.4

INDEX

A

ACCESS OPENINGS
Attic 1209.2
Crawl space 1209.1
Doors 712.3.2
Fire damper 716.4
Fire department 402.7.5
Mechanical appliances 1209.3
Refuse/laundry chutes 708.13.3
ACCESSIBILITY . . . . . 1009, Chapter 11, Appendix E
Airports 412.3.5, E110
Assembly 1009.1, 1108.2, 1109.11, 1110
Bus stops E108
Construction sites 1103.2.5
Controls 1109.13
Detectable warnings 1109.10
Detention and correctional facilities 1103.2.13, 1107.5.5,1108.4.2, E104.1
Dining areas 1108.2.9, 1109.11
Dressing rooms 1109.12.1
Drinking fountains 1109.5
Dwelling units 1103.2.3, 1105.1.6, 1107
Egress (see ACCESSIBLE MEANS OF EGRESS) . . . 1009
Elevators 1009.2.1, 1009.4, 1009.7.3, 1109.7, 3001.3
Employee work areas 907.5.2.31, 1103.2.2, 1104.3.1
Entrances 1105
Exceptions 1103.2, 1104.4, 1107.7
Existing buildings 1009.1
Fuel dispensing 1109.14
Gaming tables and machines 1109.15, E105.3
Institutional 1103.2.12, 1103.2.13, 1107, 1109.11.2
Judicial facilities 1108.4, 1109.11.2
Kitchens 1109.4
Laundry E105.2
Lifts 1009.5, 1109.8
Live/work unit 419.7, 1107.6.2.1
Parking and passenger loading facilities 1106
Performance areas 1108.2.8
Platform 1108.2.8, E103.1
Press box 1104.3.2
Ramps 1012
Recreational facilities (see RECREATION FACILITIES) . . . 1104.2, 1110
Religious worship, places of 1103.2.8
Residential 1103.2.3, 1103.2.11, 1107
Route 1003.3.4, 1104, 1107.4
Saunas and steam rooms 1109.6
Scoping 1101, 1103.1, E101.1
Seating 1108.2, 1109.11
Service facility 1109.12
Signage . . . . . 1009.8 through 1009.11, 1110, E107
Sleeping units 1107, 1105.1.6
Storage 1108.3, 1109.9
Telephone E106
Toilet and bathing facilities 1107.6.1.1, 1109.2, 1109.3E105.1
Train and light-rail stations E109
Transient lodging 1103.2.11, 1107.6.1E104.2
Utility 1103.2.4
ACCESSIBLE MEANS OF EGRESS 1009
Areas of refuge (see AREA OF REFUGE)
Assembly 1009.1, 1029.8
Elevators 1009.2.1, 1009.4, 1009.8
Existing building 1009.1
Exterior area for assisted rescue (see EXTERIOR AREA FOR ASSISTED RESCUE)
Horizontal exit (see HORIZONTAL EXIT)
Mezzanine 1009.1
Platform lift 1009.5
Required 1009.1
Stairways 1009.3
Signage . . . . . 1009.8 through 1009.11, 3002.3
ACCESSORY OCCUPANCIES 303.1.2, 303.1.4, 305.1.1, 312.1, 419.1, 508.2
ADDITION 101.4.8, D103.1
Means of egress 3302.1, 3310
ADMINISTRATION . . . . . Chapter 1
ADOBE CONSTRUCTION 202, 2109.3
AEROSOLS 202, 307.1, 311.2, 414.1.2.1, 414.2.5, 907.2.16
AGGREGATE 202
Ballast 1504.8
AGRICULTURAL BUILDINGS (see GROUP U) . . . . . 312.1, 1103.2.4, Appendix C
AIR CONDITIONING (see MECHANICAL) 2801.1, 3005.2
AIR INTAKES (see YARDS OR COURTS) . . . 1206.3.2
AIRCRAFT HANGARS 412.4
Aircraft paint hangars 412.6, 507.10
Basements 412.4.2
Construction 412.4.1, 412.4.5, 412.6.2
Fire area 412.4.6.2
Fire suppression system 412.4.6, 412.6.5

Heliports and helistops 412.5, 905.3.6, 906.1, 1605.4
Residential 412.5, 907.2.21
Unlimited height and area 504.1, 507.10
AIRCRAFT MANUFACTURING FACILITIES . . . 412.7
AIRCRAFT-RELATED OCCUPANCIES . . . 412, E110
Airport traffic control towers 412.3, 907.2.22
Traffic control towers 412.3
Alarms and detection . . 412.3.4, 412.3.5, 907.2.22
Construction type 412.3.1, 412.3.2
Egress 412.3.2, 412.3.3, 412.3.4
AISLE 1018, 1029.9, 1029.13
Aisle accessways 1018.4, 1029.12
Assembly seating 1018.2, 1029.6
Bleachers 1029.1.1
Business 1018.3
Check-out 1109.12.2
Construction 1029.11
Converging 1029.9.3
Egress 1018, 1029
Folding and telescopic seating 1029.1.1
Grandstands 1029.1.1
Mercantile 1018.3, 1018.4
Obstructions 1029.9.6
Tables 1029.12.1
Tents 3103.4
Transitions 1029.10
Width 1029.9
ALARM SYSTEMS, EMERGENCY 908
ALARMS, FIRE (see FIRE ALARM AND SMOKE DETECTION SYSTEMS)
ALARMS, VISIBLE 907.5.2.3
Common areas 907.5.2.3.1
Employee work areas 907.5.2.3.1
Group I-1 . . . . . 907.5.2.3.2
Group R-1 . . . . . 907.5.2.3.2
Group R-2 . . . . . 907.5.2.3.3
Public areas 907.5.2.3.1
ALARMS, VOICE 907.5.2.2
Amusement buildings, special 411.6, 907.2.12.3
Covered and open mall buildings 402.7.4, 907.2.20,
Emergency power 2702.2.4
High-rise buildings 403.4.4, 907.2.13
Occupant evacuation elevators 3008.9
Underground buildings 405.8.2, 907.2.19
ALLOWABLE STRESS DESIGN 202
Load combinations 1605.3
Masonry design 2107
Wood design 2301.2, 2306
ALTERATIONS 101.4.8, D103.1
Means of egress 3302.1, 3310.2
ALTERNATING TREAD DEVICES 1011.14
Construction 1011.14.2
Equipment platform 505.5
Heliports 412.8.3
Technical production areas 410.6.3.4
ALTERNATIVE MATERIALS, DESIGN AND METHODS 104.11
ALUMINUM . . . . . 1404.5.1, 1604.3.5, Chapter 20
AMBULATORY CARE FACILITIES 422
Alarm and detection 907.2.2.1
Smoke compartment 422.2, 422.3
AMUSEMENT BUILDING, SPECIAL 411
Alarm and detection 411.3, 411.5, 907.2.12
Classification 411.1
Emergency voice/alarm communications system 411.6, 907.2.12.3
Exit marking 411.7, 411.7.1
Interior finish 411.8
Sprinklers protection 411.4
AMUSEMENT PARK STRUCTURES 303
Accessibility 1110.4.8
ANCHOR STORE (see COVERED MALL AND OPEN MALL BUILDINGS) 402
Construction type 402.4.12
Means of egress 402.8.4.1
Occupant load 402.8.2.3
Separation 402.4.2.2, 402.4.2.3
Sprinkler protection 402.5
ANCHORAGE 1604.8
Braced wall line sills 2308.6.7.3
Concrete 1901.3
Conventional light-frame construction 2308.3.1, 2308.3.2, 2308.4.10
Decks 1604.8.3
Seismic anchorage for masonry chimneys . . . 2113.4
Seismic anchorage for masonry fireplaces . . . 2111.5
Walls 1604.8.2
Wood sill plates 2308.3
APARTMENT HOUSES 310.4
APPEALS 113
APPROVED AGENCY 202, 1703.1
ARCHITECT (see definition for REGISTERED DESIGN PROFESSIONAL)
ARCHITECTURAL TRIM 603.1, 1406.2.2, D102.2.7
AREA, BUILDING . . . . . Chapter 5, 506
Accessory uses 508.2.3
Aircraft hangars, residential 412.5.5
Covered and open mall building 402.4.1
Enclosed parking garage 406.6.1, 510.3

Equipment platforms 505.3.1
Incidental uses 509.3
Limitations 503, 506
Membrane structures 3102.4
Mezzanines 505.2.1
Mixed construction types 3102.6
Mixed occupancy 508.2.3, 508.3.2, 508.4.2
Modifications 506, 510
Open mall building 402.4.1
Open parking garage 406.5.4, 406.5.4.1, 406.5.5, 510.2, 510.3, 510.4, 510.7, 510.8, 510.9
Private garages and carports 406.3.1
Unlimited area 503.1.1, 503.1.3, 506.1.1, 506.2, 507

AREA FOR ASSISTED RESCUE, EXTERIOR (see EXTERIOR AREAS FOR ASSISTED RESCUE)

AREA OF REFUGE (see ACCESSIBLE MEANS OF EGRESS)
Requirements 1009.6
Signage 1009.9, 1009.10, 1009.11
Two-way communication 1009.6.5
Where required 1009.2, 1009.3, 1009.4

ASSEMBLY OCCUPANCY (GROUP A) 303, 1029
Accessibility 1108.2, 1108.4, 1109.2.1, 1110
Alarms and detection 907.2.1
Area 503, 506, 507, 508
Bleachers (see BLEACHERS)
Folding and telescopic seating (see BLEACHERS)
Grandstands (see GRANDSTANDS)
Group-specific provisions
A-1 . . . . . 303.2
A-2 . . . . . 303.3
A-3 . . . . . 303.4
A-4 . . . . . 303.5
A-5 . . . . . 303.6
Motion picture theater 409, 507.12
Special amusement buildings 411
Stages and platforms 410
Height 503, 504, 505, 508, 510
Incidental uses 509
Interior finishes . . . . . Table 803.11, 804
Live load . . . . . Table 1607.1, 1607.12.3
Means of egress
Aisles 1018.2, 1029.9, 1029.10
Assembly spaces 1029
Exit signs 1013.1
Guards 1015.2, 1029.16
Main exit 1029.3
Outdoors 1005.3.1, 1005.3.2, 1006.3, 1009.6.4, 1019.3, 1027, 1029.6.2
Panic hardware 1010.1.10, 1010.2.1
Stairway, exit access 1019
Travel distance 1016.2.1, 1017.2, 1006.3.1, 1006.3.2, 1029.7
Mixed occupancies 508.3, 508.4
Accessory 508.2
Education 303.1.3
Live/work units 419
Mall buildings 402
Other occupancies 303.1.1, 303.1.2, 303.1.3
Parking below/above 510.7, 510.9
Religious facilities 303.1.4
Special mixed 510.2
Motion picture theaters 409, 507.11
Occupancy exceptions 303.1.1, 303.1.2, 303.1.3, 303.1.4, 305.1.1, 305.2.1
Plumbing fixtures 2902
Risk category . . . . . Table 1604.5
Seating, fixed (see SEATING, FIXED)
Seating, smoke-protected 1029.6.2
Sprinkler protection 410, 504.3, 506.2, 507.3, 507.4, 507.6, 507.7, 507.12, 903.2.1
Stages and platforms 410, 905.3.4
Standpipes 905.3.2, 905.3.4, 905.5.1
Unlimited area 507.4, 507.4.1, 507.6, 507.7, 507.12

ASSISTED LIVING (see GROUP I-1) 308.3, 310.6
Sixteen or fewer residents (see Group R-4) 308.3.1, 308.3.2, 310.5.1

ATMOSPHERIC ICE LOADS 1614

ATRIUM 404
Alarms and detection 404.4, 907.2.14
Enclosure 404.6, 707.3.5
Interior finish 404.8
Smoke control 404.5, 909
Sprinkler protection 404.3
Standby power 404.7
Travel distance 404.9, 1016.2.1, 1017.2, 1006.3.2
Use 404.2

ATTIC
Access 1209.2
Combustible storage 413.2
Draftstopping 718.4
Insulation 719.3.1
Live load . . . . . Table 1607.1
Unusable space fire protection 711.3.3
Ventilation 1203.2

AUDITORIUM 303, 305.1.1
Accessibility 1108.2
Foyers and lobbies 1029.4
Interior balconies 1029.5

Motion picture projection rooms. 409
Stages and platforms. 410
AUTOMOBILE PARKING GARAGE (see GARAGE, AUTOMOBILE PARKING) 406
AWNINGS. 3105
Design and construction 3105.3
Drainage, water 3201.4
Encroachment, public right-of-way 3202.2.3, 3202.3.1, 3202.4
Fire district D102.2.8
Live load . . . . Table 1607.1, 1607.12.2.1, 1607.12.4
Materials 3105.4
Motor vehicle service stations 406.7.2
Permanent D102.2.8
Plastic 2606.10

B

BALCONIES
Accessibility 1108.2.4
Assembly 1029.5
Construction, exterior. 1406.3
Guards 1015.2
Live load . . . . . .Table 1607.1
Means of egress 1021, 1029.5
Open mall building 402.4.3, 402.5
Projection. 705.2, 1406.3
Public right-of-way encroachments 3202.3.2, 3202.3.3
Travel distance 1017.2.1
BARBECUES 2801
BARRIERS
Fire (see FIRE BARRIER)
Pedestrian protection. 3306
Smoke (see SMOKE BARRIER)
Vehicle 406.4.3, 1602.1, 1607.8.3
BASEMENT
Aircraft hangars 412.4.2
Area modification. 506.1.3
Considered a story. 202
Emergency escape 1030.1
Exits 106.3.2.2
Flood loads 1612.2, 1612.5
Height modifications for 510.5
Prohibited. 415.6, 415.7, 415.11.5.2, 418.1
Rodentproofing . . . . . Appendix F
Sprinkler protection 903.2.11.1
Waterproofing and dampproofing 1805
BASEMENT WALLS
Soil loads 1610.1
Waterproofing and dampproofing 1805
BATH AND BATHING ROOMS (see TOILET AND TOILET ROOMS) . . . . . .101.4.3, 105.2, Chapter 29
BAY AND ORIEL WINDOWS. 1406.4
Public right-of-way encroachments 3202.3.2, 3202.3.3
BLEACHERS 303.6, 1029.1.1
Accessibility 1108.2
Egress 1029.1.1
Live load. . . . . .Table 1607.1
Occupant load 1004.7
Separation 1029.1.1.1
BLOCK (see CONCRETE BLOCK AND GLASS UNIT MASONRY)
BOARD OF APPEALS . . . . . 113, Appendix B
Alternate members. B101.2.1
Application for appeal. B101.1
Board decision B101.4
Limitations on authority 113.2
Membership of board. B101.2
Notice of meeting B101.3
Qualifications 113.3, B101.2.2
BOILER ROOM
Exits 1006.2.2.1
BOLTS 2204.2
Anchor rods 1908, 1909, 2204.2.1
BONDING, MASONRY. 2204.3, 2109.2
BRACED WALL LINE 202
Bracing. 2308.6
Seismic requirements. 2308.6.10.2, 2308.6.6.2, 2308.6.8
Sill anchorage 2308.6.7.3
Spacing 2308.6.1
Support. 2308.6.8
BRACED WALL PANEL 202
Alternative bracing 2308.6.5.1, 2308.6.5.2
Connections 2308.6.7
Length 2308.6.4
Location 2308.6.2
Method 2308.6.3
BRICK (see MASONRY)
BUILDING
Area (see AREA, BUILDING). 502.1, 503, 505, 506, 507, 508, 510
Demolition 3303
Existing. 101.4.8
Fire walls 706.1
Height (see HEIGHT, BUILDING) 502.1, 503, 504, 505, 508, 510
Occupancy classification . . . . . Chapter 3
Party walls 706.1.1

BUILDING DEPARTMENT 103
BUILDING OFFICIAL
Approval 202
Duties and powers 103
Qualifications A101.1
Records 104.7
Termination. A101.4
BUILT-UP ROOFS 1507.10
BUSINESS OCCUPANCY (GROUP B) 303.1.1, 303.1.2, 304
Alarms and detection 907.2.2
Ambulatory care facilities 304, 422
Area 503, 505, 506, 507, 508
Height 503, 504, 505, 508, 510
Incidental uses 509
Interior finishes . . . . . Table 803.11, 804
Live load . . . . . Table 1607.1
Means of egress
Aisles 1018.3
Stairway, exit access 1019
Travel distance 1016.2.1, 1017.2, 1006.3.2
Mixed occupancies 508.2, 508.3, 508.4
Accessory. 303.1.2, 508.2
Ambulatory care facilities 422
Assembly 303.1.2
Educational. 303.1, 304.1
Live/work units 419
Mall buildings 402
Parking below/above 510.7, 510.8, 510.9
Special mixed 510.2
Occupancy exceptions 303.1.1, 303.1.2
Plumbing fixtures 2902
Risk category . . . . . Table 1604.5
Sprinkler protection. 903.2.2
Unlimited area 507.4, 507.5

C

CABLES, STEEL STRUCTURAL. 2208
CALCULATED FIRE RESISTANCE
(see FIRE RESISTANCE, CALCULATED)
CANOPIES 3105
Design and construction 3105.3
Drainage, water 3201.4
Encroachment, public right-of-way 3202.3.1
Fire district D102.2.8
Live load . . . . . Table 1607.1, 1607.12.2.1, 1607.12.4
Materials 3105.4
Motor vehicle service stations 406.7.2
Permanent D102.2.8
Plastic 2606.10
CARBON MONOXIDE
ALARMS AND DETECTION 915
CARE FACILITIES (see HEALTH CARE)
CARE PROVIDER STATIONS 407.2.2
CARE SUITES. 202, 407.4.4
CARPET
Floor covering 804.2
Textile ceiling finish. 803.6
Textile wall coverings 803.5
CATWALKS
(see TECHNICAL PRODUCTION AREAS)
Construction 410.3.2
Live loads . . . . . Table 1607.1
Means of egress 410.6.3
Sprinkler protection. 410.7
CEILING
Acoustical 808
Height 406.4.1, 409.2, 909.20.4.3, 1003.2, 1011.3, 1010.5.2, 1205.2.2, 1208.2
Interior finish 803
Penetration of fire-resistant assemblies 713.4, 716.2, 716.6
Suspended acoustical. 808.1.1
CELLULOSE NITRATE FILM 409.1, 903.2.5.3
CERAMIC TILE
Mortar 2103.2.3
CERTIFICATE OF OCCUPANCY 106.2, 111
CHANGE OF OCCUPANCY 101.4.8, D103.2
CHILD CARE (see DAY CARE) 305.2, 308.6, 310.5.1
CHILDREN'S PLAY STRUCTURES. 424
Accessibility 1110
Covered and open mall building 402.6.3
CHIMNEYS 202
Factory-built 718.2.5
Flashing 1503.6
Masonry 2111, 2112, 2113
Protection from adjacent construction. 3307.1
CHURCHES
(see RELIGIOUS WORSHIP, PLACES OF)
CIRCULAR STAIRWAYS
(see CURVED STAIRWAYS)
CLAY ROOF TILE. 1507.3
Testing 1504.2
CLINIC
Hospital
[see INSTITUTIONAL (GROUP I-2)]. 308.3
Outpatient
(see AMBULATORY CARE FACILITIES) 202, 304.1, 422
COAL POCKETS. 426.1.6
CODES 101.2, 101.4, 102.2, 102.4, 102.6, Chapter 35

COLD STORAGE
(see FOAM PLASTIC INSULATION)
COLD-FORMED STEEL 202, 2210
Light-frame construction 2211
Special inspection 1705.2.2, 1705.2.4, 1705.11.2, 1705.12.3
COMBUSTIBLE DUSTS 307.4, 414.5.1, 426.1
COMBUSTIBLE LIQUIDS 307.1, 307.4, 307.5, 414.2.5, 414.5.3, 415.9.2, 415.10.1, 418.6
COMBUSTIBLE MATERIAL
Concealed spaces 413.2, 718.5
Exterior side of exterior wall 1406
High-pile stock or rack storage 413.1, 910.2.2
Type I and Type II 603, 805
COMBUSTIBLE PROJECTIONS 705.2, 1406.3
COMBUSTIBLE STORAGE 413, 910.2.2
COMMON PATH OF EGRESS TRAVEL 1016.2.1
COMPARTMENTATION
Ambulatory care facilities 422.2, 422.3
Group I-2 . . . . . 407.5, 407.6
Group I-3 . . . . . 408.6
Underground buildings 405.4, 405.5.2
COMPLIANCE ALTERNATIVES 101.4.8
COMPRESSED GAS 307.2, 415.11.7
CONCEALED SPACES 413.2, 718
CONCRETE . . . . . Chapter 19
ACI 318 modifications 1901.2, 1903.1, 1905
Anchorage 1901.3
Calculated fire resistance 721.2
Construction documents 1901.5
Durability 1904
Footings 1809
Foundation walls 1807.1.5, 1808.8
Materials 1705.3.2, 1903
Plain, structural 1906
Reinforced gypsum concrete 2514
Rodentproofing . . . . . Appendix F
Roof tile 1507.3, 1504.2
Shotcrete 1908
Slab, minimum 1907
Special inspections . . . . . 1705.3, Table 1705.3
Specifications 1903
Strength testing 1705.3.2
Wood support 2304.13
CONCRETE MASONRY
Calculated fire resistance 721.3
Construction 2104
Design 2101.2, 2108, 2109
Materials 2103.1
Surface bonding 2109.2
Wood support 2304.13
CONCRETE ROOF TILE 1507.3
Wind resistance 1504.2, 1609.5.3
CONDOMINIUM (see APARTMENT HOUSES)
CONDUIT, PENETRATION PROTECTION 713.3, 1023.5
CONFLICTS IN CODE 102
CONGREGATE LIVING FACILITIES 202, 310
CONSTRUCTION
(see SAFEGUARDS DURING CONSTRUCTION)
CONSTRUCTION DOCUMENTS 107, 202, 1603
Alarms and detection 907.1.1
Concrete construction 1901.5
Design load-bearing capacity 1803.6
Fire-resistant joint systems 714
Flood 1603.1.7
Floor live load 1603.1.1
Geotechnical 1603.1.6
Means of egress 107.2.3
Penetrations 713
Permit application 105.1
Retention 107.5
Review 107.3
Roof assemblies 1503
Roof live load 1603.1.2
Roof snow load 1603.1.3
Seismic 1603.1.5,
Seismic certification 1705.13.2, 1705.13.3
Site plan 107.2.5
Special loads 1603.1.8
Temporary structures 3103.2
Wind load 1603.1.4
CONSTRUCTION JOINTS
Shotcrete 1908.7
CONSTRUCTION TYPES . . . . . Chapter 6
Aircraft paint hangers 412.6.2
Classification 602
Combustible material in
Type I and Type II construction 603, 805
Covered and open mall buildings 402.4.1
Fire district D102.2.3
Fire resistance . . . . . Table 601, Table 602
High-rise 403.2
Type I . . . . . Table 601, 602.2, 603
Type II . . . . . Table 601, 602.2, 603
Type III . . . . . Table 601, 602.3
Type IV . . . . . Table 601, 602.4
Type V . . . . . Table 601, 602.5
Underground buildings 405.2
CONTRACTOR'S
RESPONSIBILITIES 901.5, 1704.4

CONTROL AREA 414.2, 707.3.7
Fire-resistance rating 414.2.4
Maximum allowed quantities 414.2.2
Number 414.2.3
CONVENTIONAL LIGHT-FRAME CONSTRUCTION 202, 2301.2, 2308
Additional seismic requirements 2308.6.6, 2308.6.8, 2308.6.10
Braced wall lines 2308.6
Connections and fasteners 2308.1.2
Design of elements 2308.8
Floor joists 2308.4.2
Foundation plates or sills 2308.3
Girders 2308.7
Limitations 2308.2
Roof and ceiling framing 2308.7
Wall framing 2308.5
CONVEYING SYSTEMS 3004
CORNICES
Definition 202
Draftstopping 718.2.6
Live load . . . . . Table 1607.1
Masonry 2104.1.2
Projection 705.2, 1406.3
Public right-of-way encroachments 3202.3.2, 3202.3.3
CORRIDOR (see CORRIDOR PROTECTION, EXIT ACCESS, FIRE PARTITIONS and SERVICE CORRIDORS) 1020
Air movement 1020.5
Continuity 1020.6
Covered and open mall buildings . . . 402.8.1, 402.8.6
Dead end 1020.4
Encroachment 1020.3
Elevation change 1003.5
Group I-2 . . . . . 407.2, 407.3, 407.4.1, 407.4.3
Hazardous 415.11
Headroom 1003.2, 1003.3
HPM service 903.2.5.2
Live load . . . . . Table 1607.1
Walls 709.1, 1020.1
Width/capacity 1003.3.4, 1003.6, 1005.2, 1005.7, 1020.2, 1020.3
CORRIDOR PROTECTION, EXIT ACCESS
Construction, fire protection . . . . . 709.1, Table 1020.1, 1020.6
Doors 715.4
Glazing 715.5
Group I-2 . . . . . 407.3
Interior finish . . . . . Table 803.11, 804.4
Opening protection 715, 716.5.4.1
Ventilation 1020.5, 1020.5.1
CORROSIVES . . . . . 307.2, 307.6, Table 414.2.5(1), 414.3, 415.10.3, Table 415.11.1.1.1
COURTS (see YARDS OR COURTS) 1206
COVERED AND OPEN MALL BUILDINGS 402
Alarms and detection 402.7.4, 907.2.20, 2702.2.14
Children's play structures 402.6.3, 424
Construction type 402.4
Fire department 402.3, 402.7.5
Interior finish 402.6.1
Kiosk 402.6.2
Means of egress 402.8
Occupant load 402.8.3
Open mall construction 402.4.3
Perimeter line 402.1.2
Separation 402.4.2
Signs 402.6.4
Smoke control 402.7.2
Sprinkler protection 402.5
Standby power 402.7.3, 2702.2.14
Standpipe system 402.7.1, 905.3.3
Travel distance 402.8.5, 1016.2.1, 1017.2, 1006.3.2
COVERED WALKWAY (see PEDESTRIAN WALKWAY) 3104, 3306.7
CRAWL SPACE
Access 1209.1
Drainage 1805.1.2
Unusable space fire protection 711.3.3
Ventilation 1203.4
CRIPPLE WALL 202, 2308.6.6.2, 2308.9.4,
CROSS-LAMINATED TIMBER 602.4.2
CRYOGENIC . . . . . Table 307.1, Table 414.5.1, Table 415.11.1.1.1

D

DAMPERS (see FIRE DAMPERS AND SMOKE DAMPERS) . . . . . 716.2 through 716.5
DAMPPROOFING AND WATERPROOFING 1805
Required 1805.2, 1805.3
Subsoil drainage system 1805.4
DAY CARE 305.2, 308.6, 310.5
Accessibility 1103.2.12
Adult care 308.6
Child care 308.6, 310.5
Egress . . . . . 308.6, Table 1004.1.1, 1006.2.2.4
DAY SURGERY CENTER (see AMBULATORY CARE FACILITIES)
DEAD END 1020.4

DEAD LOAD 202, 1606
Foundation design load 1808.3
DECK
Anchorage 1604.8.3
Live loads . . . . . Table 1607.1
DEFLECTIONS 1604.3.1
Framing supporting glass 2403.3
Preconstruction load tests 1709.3.1
Wood diaphragms 2305
Wood shear walls 2305
DEMOLITION 3303
DESIGN STRENGTH 202
Conformance to standards 1706.1
New materials 1706.2
DESIGNATED SEISMIC SYSTEM 202
Seismic certification 1705.13.3
Special inspection 1705.12.4
DIAPHRAGMS 202
Analysis 1604.4
Ceilings 2508.5
Special inspection 1705.5.1, 1705.11.1, 1705.12.2
Wood 2305, 2306.2
DOORS 1010
Access-controlled 1010.1.9.8
Atrium enclosures 404.6
Configuration 1007
Dwelling unit separations 406.3.4, 412.5.1
Emergency escape 1030.1
Fabrication (HPM) areas 415.11.1.2
Fire
(see OPENING PROTECTIVES) . . . 715.4, 1023.4
Glazing 715.4.7, 715.5, 1405.13
Hazardous storage 415.11.5.7
Hardware
(see LOCKS AND LATCHES) 1005.7.1, 1010.1.9.8, 1010.1.9, 1010.1.10
Horizontal sliding 1010.1.4.3
I-2 occupancies 407.3.1
I-3 occupancies 408.3, 408.4, 408.8.4
Landings 1010.1.5, 1010.1.6
Operation 1010.1.3, 1010.1.9, 1010.1.10
Panic and fire exit hardware 1010.1.10
Power-operated 1010.1.4.2
Revolving 1010.1.4.1
Security grilles 402.8.8, 1010.1.4.4
Side swinging 1010.1.2
Smoke 710.5
Stairways 1010.1.9.11
Stairways, high-rise 403.5.3
Structural testing, exterior 1709.5
Thresholds 1003.5, 1010.1.5, 1010.1.7
Vestibule 1010.1.8
Width 1010.1.1, 1010.1.1.1
DRAFTSTOPPING
Attics 718.4
Floor-ceiling assemblies 718.3
DRINKING FOUNTAINS 1109.5, 2902.5, 2902.6
DRY CLEANING PLANTS 415.9.3
DRYING ROOMS 417
DUCTS AND AIR TRANSFER OPENINGS (see MECHANICAL)
DUMBWAITERS 708.14
DWELLING UNITS 202
Accessibility 1103.2.3, 1103.2.12, 1105.1.6, 1106.2, 1107
Alarms and detection 420.6, 907.2.8, 907.2.9, 907.2.11
Area 1208.3, 1208.4
Group R 310
Live/work units (see LIVE/WORK UNITS)
Scoping 101.2
Separation 420.2, 420.3
Sound transmission 1207
Sprinkler protection 420.5, 903.2.8

E

EARTHQUAKE LOADS (see SEISMIC) 1613
EARTHQUAKE RECORDING EQUIPMENT . . . . . Appendix L
EAVES (see COMBUSTIBLE PROJECTIONS AND CORNICES)
EDUCATIONAL OCCUPANCY (GROUP E) 305
Accessibility 1108.2, 1109.5.1, 1109.5.2
Alarms and detection 907.2.3
Area 503, 505, 506, 507, 508
Height 503, 504, 505, 508
Incidental uses 509
Interior finishes . . . . . Table 803.11, 804
Live load . . . . . Table 1607.1
Means of egress
Aisles 1018.5
Corridors 1020.1, 1020.2
Panic hardware 1010.1.10
Stairway, exit access 1019
Travel distance 1016.2.1, 1017.2, 1006.3.2
Mixed occupancies 508.3, 508.4
Accessory 303.1.3, 508.2
Assembly 303.1.3
Day care 305.2, 308.5, 310.1
Education for students above the 12th grade 304

Gyms (see GYMNASIUMS) 303.1.3
Libraries (see LIBRARIES) 303.4
Religious facilities 305.2
Stages and platforms 410
Plumbing fixtures 2902
Risk category . . . . . Table 1604.5
Sprinkler protection 903.2.3
Unlimited area 507.11
EGRESS (see MEANS OF EGRESS) . . . . . Chapter 10
ELECTRICAL . . . 105.2, 112, Chapter 27, Appendix K
ELEVATOR . . . . . Chapter 30
Accessibility 1009.2.1, 1009.4, 1009.8, 1109.6, 3001.3
Car size 403.6.1, 3001.3, 3002.4
Construction 708.14, 1607.9.1
Conveying systems 3004
Emergency operations 3002.3, 3002.5, 3003, 3007.1, 3008.1.3
Fire service access 403.6.1, 3007
Glass 2409, 3002.8
High-rise 403.2.3, 403.4.8, 403.6
Hoistway enclosures 403.2.3, 708, 1023.4, 1024.5, 3002, 3007.5, 3008.5
Hoistway lighting 3007.5.2
Hoistway pressurization 909.21
Keys 3003.3
Lobby 708.14.1, 709.1, 1009.4, 1009.8,3006, 3007.6, 3008.6
Machine rooms . . . . . Table 1607.1, 3005
Means of egress 403.6, 1003.7, 1009.2.1, 1009.4, 3008
Number of elevator cars in hoistway 3002.2
Occupant evacuation elevators 403.6.2, 3008
Personnel and material hoists 3004.4
Roof access 1011.12.2
Shaft enclosure 712, 3006
Signs 914, 1009.10, 3002.3, 3007.6.5, 3008.6.5
Stairway to elevator equipment 1011.12.2.1
Standards 3001
Standby power 2702.2.2, 3007.8, 3008.8
System monitoring 3007.7, 3008.7
Underground 405.4.3
EMERGENCY COMMUNICATIONS
Accessible means of egress 1009.8
Alarms (see FIRE ALARMS)
Elevators, occupant evacuation 3008.6.6
Fire command center 403.4.6, 911, 3007.7, 3008.6.6, 3008.7
Radio coverage 403.4.5, 916
EMERGENCY EGRESS OPENINGS 1030
Required . . . . . Table 1006.3.2(2), 1030.1
Window wells 1030.5
EMERGENCY LIGHTING 1008.3, 1205.5
EMERGENCY POWER 2702.1, 2702.4
Exit signs 1013.6.3, 2702.2.5, 2702.2.12
Group I-2 . . . . . 2702.2.6
Group I-3 . . . . . 408.4.2, 2702.2.7
Hazardous 415.11.10, 2702.2.13, 2702.2.14
High-rise 403.4.8, 2702.2.9
Means of egress illumination 1008.3, 2702.2.11
Semiconductor fabrication 415.11.10, 2702.2.14
Underground buildings 405.9, 2702.2.16
EMERGENCY RESPONDERS
Additional exit stairway 403.5.2
Elevators 403.6, 1009.2.1, 3002.4, 3003, 3007, 3008
Fire command center 403.4.6, 911, 3007.7, 3008.6.6, 3008.7
Mall access 402.7.5
Radio coverage 403.4.4, 916
Roof access 1011.12
Safety features 914
EMPIRICAL DESIGN OF MASONRY 2109
Adobe construction 2109.3
General 2109.1
Special inspection 1705.4
Surface-bonded 2109.2
EMPLOYEE
Accessibility for work areas 907.5.2.3.1, 1103.2.2, 1104.3.1
Deputies to building official 103.3
Liability 104.8
Qualifications A101
Termination of employment A101.4
ENCROACHMENTS INTO THE PUBLIC RIGHT-OF-WAY . . . . . Chapter 32
END-JOINTED LUMBER 2303.1.1.2
Relocated structures 101.4.8, D103.3
Rodentproofing . . . . . Appendix F
ENERGY EFFICIENCY . . . . . 101.4.6, 110.3.7, Chapter 13
ENGINEER (see definition for REGISTERED DESIGN PROFESSIONAL)
EQUIPMENT PLATFORM 505.5
EQUIVALENT OPENING FACTOR . . . . . Figure 705.7
ESCALATORS 3004
Floor opening protection 708.2
Means of egress 1003.7
ESSENTIAL FACILITIES (see RISK CATEGORY) . . . . . 202, Table 1604.5
EXCAVATION, GRADING AND FILL 1804, 3304
EXISTING BUILDING 101.4.8, 102.6
Additions D103.1
Alteration D103.1

Change of occupancy D103.2
Flood-resistant . . . . . Appendix G
Historic 101.4.8
Relocated structures D103.3
Repairs 101.4.8
Rodentproofing . . . . . Appendix F

EXIT
(see MEANS OF EGRESS) . . . . 1022 through 1027
Basement 1006.3.2.2
Boiler rooms 1006.2.2.1
Configuration 1007
Construction 713.2, 1019, 1023.2
Doorways 1007
Dwellings 1006.3.2.1
Enclosure 707.3, 1023.2
Fire resistance 707.3, 1019, 1023.2
Furnace rooms 1006.2.2.1
Group H 415.11.3.3, 415.11.5.6
Group I-2 . . . . . .407.4
Group I-3 . . . . . .408.3
High rise 403.5, 403.6, 1025
Horizontal 707.3.5, 1026
Incinerator rooms 1006.2.2.1
Interior finish . . . . . .Table 803.11, 804
Luminous 403.5.5, 411.7.1, 1025
Mall buildings 402.8
Mezzanines 505.3, 505.4, 1004.1.1.2
Number, minimum 402.8.3, 403.5, 1006.2, 1006
Occupant load 402.8.2, 1004.1.1
Passageway 1024
Ramps, exterior 1027
Ramp, interior 1023
Refrigerated rooms or spaces 1006.2.2.3
Refrigeration machinery rooms 1006.2.2.2
Signs 1013
Stairways, exterior 1027
Stairway, interior 1023
Stories 1004.1.1.3, 1006,3, 1017.3.1
Travel distance 402.8.3, 402.8.5, 402.8.6, 404.9, 407.4.2, 408.6.1, 408.8.1, 410.6.3.2, 411.4, 1006.3.2, 1016.2.1, 1017, 1029.7, 1029.8
Underground buildings 405.7

EXIT ACCESS (see MEANS OF EGRESS) . . . . . 1016 through 1021
Aisles 1018
Balconies 1017.2.1, 1021
Common path 1016.2.1
Corridors 1020
Doors 1005.7, 1006.2, 1007, 1010, 1022.2
Intervening space 1016.2
Path of egress travel, common 1016.2.1
Ramps 1019
Seating at tables 1029.12.1
Single exit 1006.2, 1006.3.2
Stages 410.6.2
Stairway 1019
Travel distance 402.8.3, 402.8.5, 402.8.6, 404.9, 408.6.1, 408.8.1, 410.6.3.2, 411.4, 1006.2, 1016.2.1, 1017, 1006.3.2, 1029.7

EXIT DISCHARGE
(see MEANS OF EGRESS) 1028
Atrium 404.10
Courts 1028.4
Horizontal exit 1028.1
Lobbies 1028.1
Marquees 3106.4
Public way 1028.5
Termination 1023.3
Vestibules 1028.1

EXIT PASSAGEWAY
(see MEANS OF EGRESS) 402.8.6.1, 707.3.4, 1024
Construction 1019, 1024.3
Discharge 1024.4, 1028.1
Elevators within 1024.5, 3002.7
Fire-resistant construction 1024.3
High-rise 403.5
Openings 1024.5
Penetrations 1024.6
Pressurization 909.6, 909.20.5
Smokeproof 403.5.4, 405.7.2, 909.20
Width 1024.2
Ventilation 1024.7

EXIT SIGNS 1013
Accessibility 1013.4
Floor level exit signs 1013.2
Group R-1 . . . . . .1013.2
Illumination 1013.3, 1013.5, 1013.6
Required 1013.1
Special amusement buildings 411.7

EXPLOSIVES . . . . . 202, Table 414.5.1, Table 415.6.2
Detached building 415.6.2, 415.8
Explosion control 415.7

EXPOSURE CATEGORY
(see WIND LOAD) 1609.4

EXTERIOR AREAS FOR ASSISTED RESCUE
Requirements 1009.7
Signage 1009.9, 1009.10, 1009.11
Where required 1009.2

EXTERIOR INSULATION AND FINISH SYSTEMS (EIFS) 1408
Special inspection. 1705.16
EXTERIOR WALLS (see WALLS, EXTERIOR) . . . . . Table 601, 602, 705, Chapter 14

F

FACTORY OCCUPANCY (GROUP F) 306
Alarm and detection 907.2.4
Area 503, 503.1.1, 505, 506, 507, 508
Equipment platforms. 505.2
Groups
Low-hazard occupancy. 306.3
Moderate-hazard occupancy 306.2
Height 503, 504, 505, 508
Incidental uses 509
Interior finishes . . . . . Table 803.11, 804
Live load . . . . . Table 1607.1
Means of Egress
Aisles 1018.5
Dead end corridor. 1020.4
Stairway, exit access 1019
Travel distance 1006.2, 1016.2.1, 1017.2, 1017.2.2, 1006.3.2
Mixed occupancies 508.2, 508.3, 508.4
Plumbing fixtures 2902
Risk category . . . . . Table 1604.5
Sprinkler protection. 903.2.4
Unlimited area 507.3, 507.4, 507.5
FARM BUILDINGS . . . . . Appendix C
FEES, PERMIT 109
Refunds 109.6
Related fees 109.5
Work commencing before issuance 109.4
FENCES 105.2, 312.1
FIBERBOARD 202, 2303.1.6
Shear wall. . . . . Table 2306.3(2)
FILL MATERIAL 1804, 3304
FINGER-JOINTED LUMBER (see END-JOINTED LUMBER)
FIRE ALARM AND SMOKE DETECTION SYSTEMS
Aerosol storage 907.2.16
Aircraft hangars, residential 412.5.3, 907.2.21
Airport traffic control towers 412.3.5, 907.2.22
Ambulatory care facilities 422.5, 907.2.2.1
Assembly 907.2.1
Atriums 404.4, 907.2.14
Audible alarm 907.5.2.1
Battery room 907.2.23
Children's play structure 424.3
Construction documents 907.1.1
Covered and open mall building 402.6.2, 402.7, 907.2.20
Education 907.2.3
Emergency alarm system 908
Factory 907.2.4
Group H 907.2.5
Group I 907.2.6, 907.5.2.3.2
Group M 907.2.7
Group R 420.6, 907.2.8, 907.2.9, 907.2.10, 907.2.11, 907.5.2.3.2, 907.5.2.3.3
High-rise 403.4.1, 403.4.2, 907.2.13
Live/work. 419.5
Lumber mills 907.2.17
Occupancy requirements 907.2
Special amusement buildings 411.3, 411.5, 907.2.12
Underground buildings 405.6, 907.2.18, 907.2.19
Visible alarm 907.5.2.3
FIRE ALARM BOX, MANUAL. 907.4.2
FIRE AREA 202, 901.7
Ambulatory care facilities 903.2.2, 907.2.2
Assembly 903.2.1
Education 903.2.3
Enclosed parking garages 903.2.10
Factory 903.2.4
Institutional 903.2.6
Mercantile 903.2.7
Residential 903.2.8
Storage 903.2.9, 903.2.10
FIRE BARRIERS 202, 707
Continuity 707.5, 713.5
Exterior walls. . . . . Table 602, 707.4, 713.6
Fire-resistance rating of walls . . . . . 603.1(1), 603.1(22), 603.1(23), 703, 707.3, 713.4
Glazing, rated 716.6
Incidental. 509.4
Inspection 110.3.6
Joints. 707.8, 713.9, 715, 2508.4
Marking 703.7
Materials 707.2, 713.3
Opening protection 707.6, 707.10, 713.7, 713.10, 714.3, 716, 717.5.2
Penetrations 707.7, 713.8
Shaft enclosure. 713.1
Special provisions
Aircraft hangars 412.4.4
Atriums 404.3, 404.6

Covered and open mall buildings 402.4.2,
Fire pumps. 403.3.4, 901.8, 913.2.1
Flammable finishes 416.2
Group H-2 . . . . . 415.9.1.2, 426.1.2
Group H-3 and H-4 . . . . . 415.10
Group H-5 . . . . . 415.11.1.2, 415.11.1.5, 415.11.5.1, 415.11.6.4
Group I-3 . . . . . 408.5, 408.7
Hazardous materials 414.2
High-rise 403.2.1.2, 403.2.3, 403.3, 403.4.8.1
Organic coating 418.4, 418.5, 418.6
Stages and platforms. 410.5.1, 410.5.2

FIRE COMMAND CENTER 403.4.6, 911, 3007.7, 3008.6.6, 3008.7

FIRE DAMPERS. . . . . 717.2 through 717.5

FIRE DEPARTMENT (see EMERGENCY RESPONDERS)

FIRE DETECTION SYSTEM (see FIRE ALARM AND SMOKE DETECTION SYSTEMS)

FIRE DISTRICT . . . . . Appendix D

FIRE DOOR (see OPENING PROTECTIVES) 716, 1023.4

FIRE ESCAPE 412.8.3

FIRE EXTINGUISHERS, PORTABLE 906, 3309

FIRE EXTINGUISHING SYSTEMS 416.5, 417.4, 903, 904

FIRE PARTITION 202, 709
Continuity. 708.4
Elevator lobby 3006.3
Exterior walls . . . . . Table 602, 709.5
Fire-resistance rating. . . . . 603.1(1), 603.1(22), 603.1(23), 703, 708.3
Glazing, rated 716.6
Inspection 110.3.6
Joint treatment gypsum 2508.4
Joints 708.8, 715
Marking 703.6
Materials 708.2
Opening protection 709.6, 714.3, 716, 717.5.4
Penetrations. 708.7, 708.9, 714, 717
Special provisions
Covered and open mall buildings 402.4.2.1
Group I-3 . . . . . 408.7
Group I-1, R-1, R-2, R-3 . . . . . 420.2

FIRE PREVENTION 101.4.5

FIRE PROTECTION
Explosion control 414.5.1, 415.6, 421.7, 426.1.4
Fire extinguishers, portable 906
Glazing, rated 716.2
Smoke and heat removal. 910
Smoke control systems 909
Sprinkler systems, automatic. 903

FIRE PROTECTION SYSTEMS . . . . . Chapter 9

FIRE PUMPS 403.3.4, 901.8, 913, 914.2

FIRE RESISTANCE
Calculated 722
Conditions of restraint 703.2.3
Ducts and air transfer openings. 717
Exterior walls . . . . . Table 602, 705.5, 708.5
Fire district D102.2.5
High-rise. 403.2
Joint systems 715
Multiple use fire assemblies. 701.2
Prescriptive 721
Ratings. . . . . Chapter 6, 703, 705.5, 707.3.10
Roof assemblies. 1505
Structural members 704
Tests 703
Thermal and sound insulating materials 720.1

FIRE RESISTANCE, CALCULATED 722
Clay brick and tile masonry 722.4
Concrete assemblies 722.2
Concrete masonry 722.3
Steel assemblies 722.5
Wood assemblies. 722.6

FIRE-RETARDANT-TREATED WOOD 202, 2303.2
Awnings 3105.3
Balconies 1406.3
Canopies 3105.3
Concealed spaces 718.5
Fastening 2304.10.5
Fire wall vertical continuity. 706.6
Partitions . . . . . 603.1(1)
Platforms 410.4
Projections 705.2.3
Roof construction. . . . . Table 601, 705.11, 706.6, 1505
Shakes and shingles 1505.6
Type I and II construction. . . . . 603.1(1), 603.1(11)
Type III construction. 602.3
Type IV construction 602.4
Veneer 1405.5

FIRE SEPARATION DISTANCE . . . . . 202, Table 602, 702
Exterior walls 1406.2.1.1.1, 1406.2.1.1.2

FIRE SERVICE ACCESS ELEVATORS 403.6.1, 3007

FIRE SHUTTER (see OPENING PROTECTIVES). 716.5, 716.5.10, 716.5.11

FIRE WALLS 706
Aircraft 412.4.6.2
Combustible framing 706.7

Continuity 706.5, 706.6
Exterior walls . . . . . Table 602, 706.5.1
Fire-resistance rating 703, 706.4
Glazing, rated 716.6
Inspection 110.3.6
Joints 706.10, 715
Marking 703.6
Materials 706.3
Opening protection 706.8, 706.11, 714.3, 716, 717.5.1
Penetration 706.9, 714.3
Special provisions
Aircraft hangars 412.4.6.2
Covered and open mall buildings 402.4.2.2
Group H-5 . . . . . 415.11.1.6
Structural stability 706.2

FIRE WINDOWS (see OPENING PROTECTIVES)

FIREBLOCKING 718.2
Chimneys 718.2.5.1, 2113.20
Fireplaces 2111.13
Wood construction 718.2.1, 718.2.7, 1406.2.3
Wood stairways 718.2.4

FIREPLACES, FACTORY-BUILT 2111.14.1

FIREPLACES, MASONRY 202
Combustibles 2111.12
Drawings 2111.2
General provisions 2111
Hearth extension 2111.10, 2111.11
Steel units 2111.6.1

FIREWORKS 202, 307.2, 307.3, 307.5

FLAMESPREAD . . . . . 802, 803.1.1, Table 803.11

FLAMMABLE FINISHES 307.1, 416

FLAMMABLE LIQUIDS 307.4, 307.5, 406, 412, 414, 415

FLAMMABLE SOLIDS 307.5, 415

FLASHING
Roof 1503.2, 1503.6, 1507.2.9, 1507.3.9, 1507.5.7, 1507.7.7, 1507.8.8, 1507.9.9, 1511.6
Wall, veneer 1405.4, 1405.12.7

FLOOD HAZARD AREAS 202, 1612.3
Coastal A zone 202
Coastal high hazard area 202
Flood insurance rate map 202

FLOOD-RESISTANT CONSTRUCTION
Accessibility 1107.7.5
Administration . . . . . G101 through G105
Elevation certificate 110.3.3
Existing 101.4.8
Flood elevation 107.2.5.1, 1612
Flood loads 1603.1, 1603.1.7, 1612, 3001.2, 3102.7
Flood resistance 1403.6, 1403.7
Flood-resistant construction . . . . . Appendix G
Grading and fill 1804.5, 1805.1.2.1
Historic buildings G105.3
Interior finishes 801.1.3
Manufactured homes G501
Modifications 104.10.1
Recreational vehicles G601
Site improvements G401
Site plan 107.2.5
Subdivisions G301
Tank G701
Temporary G901
Utility G1001
Ventilation, under floor 1203.3.2

FLOOR/CEILING (see FLOOR CONSTRUCTION)

FLOOR CONSTRUCTION (see FLOOR CONSTRUCTION, WOOD)
Draftstopping 718.3
Finishes 804, 805, 1003.4, 1210.1
Fire resistance . . . . . Table 601, 711
Loads (see FLOOR LOADS)
Materials . . . . . Chapter 6
Penetration of fire-resistant assemblies 711, 714.4, 717.2, 717.6

FLOOR CONSTRUCTION, WOOD
Beams and girders 2304.12.1.1, 2308.4.1
Bridging/blocking 2308.4.6, 2308.7.8
Diaphragms 2305.1
Fastening schedule 2304.10.1
Framing . . . . . Table 602.4, 602.4.2, 602.4.4, 2304.4
Joists 2308.4.2
Sheathing 2304.8

FLOOR LEVEL 1003.5, 1010.1.5

FLOOR LOADS
Construction documents 107.2
Live 1603.1.1, 1607
Posting 106.1

FLOOR OPENING PROTECTION (see VERTICAL OPENING PROTECTION)

FOAM PLASTICS
Attics 720.1, 2603.4.1.6
Cladding attachment 2603.11, 2603.12
Cold storage 2603.3, 2603.4.1.2, 2603.5
Concealed 603
Covered mall and open mall buildings 402.6.2, 402.6.4.5
Crawl space 2603.4.1.6
Doors . . . . . 2603.4.1.7 through 2603.4.1.9
Exterior wall covering 806.5
Exterior walls of multistory buildings 1404.13, 2603.5

Interior finish 801.2.2, 2603.10, 2604
Label/identification 2603.2
Metal composite materials (MCM) 1407.13
Roofing 2603.4.1.5
Siding backer board 2603.4.1.10
Stages and platform scenery 410.3.6
Surface burning characteristics 2603.3
Termites, protection from 2603.9
Thermal barrier requirements 2603.5.2
Trim 806.5, 2604.2
Type I and II construction . . . . . 603.1(2), 603.1(3)
Walk-in coolers 2603.4.1.3
Wind resistance 2603.10
FOLDING AND TELESCOPIC SEATING . . . 1029.1.1
Accessibility 1108.2
Egress 1029.1.1
Live load . . . . . Table 1607.1
Occupant load 1004.7
Separation 1029.1.1.1
FOOD COURT 202
Occupant load 402.8.2.4
Separation 402.4.2
FOOTBOARDS 1029.16.2
FOUNDATION (see FOUNDATION, DEEP and FOUNDATION, SHALLOW) . . . . . Chapter 18
Basement 1610, 1805.1.1, 1806.3, 1807
Concrete 1808.8, 1809.8, 1810.3.2.1
Dampproofing 1805.2
Encroachment, public right-of-way 3202.1
Formwork 3304.1
Geotechnical investigation (see SOILS AND FOUNDATIONS) 1803
Inspection 110.3.1
Load-bearing value 1806, 1808, 1810
Masonry 1808.9
Pedestrian protection 3306.9
Pier (see FOUNDATION, SHALLOW)
Pile (see FOUNDATION, DEEP)
Plates or sills 2308.3
Protection from adjacent construction 3303.5, 3307.1
Rodentproofing . . . . . Appendix F
Special inspections 1705.3, 1705.4.2, 1705.7, 1705.8, 1705.9
Steel 1809.11, 1810.3.2.3, 1810.3.5.3
Timber 1809.12, 1810.3.2.4
Waterproofing 1805.3
FOUNDATION, DEEP 202, 1810
Drilled shaft 202
Existing 1810.10.1.2
Geotechnical investigation 1803.5.5
Grade beams 1810.3.12
Helical pile . . . . . 202, 1810.3.1.5, Table 1810.3.2.6, 1810.3.3.1.9, 1810.3.5.3.3, 1810.4.11, 1810.4.12
Micropile . . . . . 202, Table 1808.8.1, Table 1810.3.2.6, 1810.3.5.2.3, 1810.3.10, 1810.4.10
Piles . . . . Table 1808.8.1, 1809.12, 1810, 1810.3.1.4
FOUNDATION, SHALLOW 202, 1809
Pier and curtain wall 1809.10
Slab-on-grade 1808.6.2
Strip footing 1808.8, 1809
FOYERS
Assembly occupancy 1029.4, 1029.9.5
Corridors 1020.6
Covered and open mall building 402.1
FRAME INSPECTION 110.3.4
FRATERNITIES 310.4
FROST PROTECTION 1809.5
FURNACE ROOMS 1006.2.2.1

G

GALLERIES (see TECHNICAL PRODUCTION AREAS)
GARAGE, AUTOMOBILE PARKING (see PARKING GARAGES)
GARAGE, REPAIR 406.8
Floor surface 406.8.3
Gas detection system 406.8.5, 908.5
Sprinkler protection 406.8.6, 903.2.9.1
Ventilation 406.8.2
GARAGES, TRUCK AND BUS
Live load 1607.7
Sprinkler protection 903.2.10.1
GARAGES AND CARPORTS, PRIVATE
Area limitations 406.3.1
Classification 406.3.1
Parking surfaces 406.3.3, 406.3.5
Separation 406.3.4, 406.3.5.1
GAS 101.4.1, 105.2, 112
Accessibility 1109.14
Gas detection system 406.6.6, 406.8.5, 415.8.7, 415.11.7, 421.6, 908
Hydrogen cutoff room 421.6
Motor fuel-dispensing 406.7
GATES 1010.2
Vehicular 3110
GIFT SHOPS 407.2.4
GIRDERS
Fire resistance . . . . . Table 601

Materials . . . . . Chapter 6
Wood construction 2304.12.1.1, 2308.4.1
GLASS (see GLAZING)
GLASS BLOCK (see GLASS UNIT MASONRY)
GLASS UNIT MASONRY 202, 2110
Atrium enclosure 404.6
Fire resistance 2110.1.1
Hazardous locations 2406.1.3
GLAZING
Athletic facilities 2408
Atrium enclosure 404.6
Doors 705.8, 709.5, 710.5, 716.4.3.2, 1405.13, 1709.1
Elevator hoistway and car 2409
Fire doors 716.5.5.1, 716.5.8
Fire-resistant walls 716.5.3.2
Fire windows 703.5, 716.5
Group I-3 . . . . . 408.7
Guards 1015.2.1, 2406.4.4, 2407
Handrail 1011.11, 2407
Identification 2403.1, 2406.3
Impact loads 2406.1, 2407.1.4.2, 2408.2.1, 2408.3
Impact resistant 1609.1.2
Jalousies 2403.5
Label/identification 716.3.1, 716.3.2, 716.5.7.1, 716.5.8.3, 716.6.8
Loads 2404
Louvered windows 2403.5
Opening protection 716.2
Replacement 2401.2
Safety 716.5.8.4, 716.6.3, 2406
Security 408.7
Skylights 2405
Sloped 2404.2, 2405
Supports 2403.2
Swimming pools 2406.4
Testing 1709.5, 2406.1.1, 2408.2.1
Veneer 1405.12
Vertical 2404.1
Walkways 2409.1
GRADE, LUMBER (see LUMBER) 202
GRADE PLANE 202
GRAIN ELEVATORS 426.1.5
GRANDSTANDS 303.1, 1029.1.1
Accessibility 1108.2
Egress 1029.1.1
Exit sign 1013.1
Live load . . . . . Table 1607.1
Occupant load 1004.4
Separation 1029.1.1.1
GREENHOUSES 312.1
Area 503, 506, 507, 508
Deflections . . . . . Table 1604.3
Live load 1607.12.2.1
Membrane structure 3102.1
Plastic 2606.11
Sloped glazing 2405
Wind load 1609.1.2
GRIDIRON (see TECHNICAL PRODUCTION AREAS)
GRINDING ROOMS 426.1.2
GROSS LEASABLE AREA (see COVERED MALL AND OPEN MALL BUILDINGS) 202, 402.3, 402.8.2
GROUT 714.3.1.1, 714.4.1
GUARDS 1015
Assembly seating 1029.1.1, 1029.16
Equipment platform 505.3.3
Exceptions 1015.2
Glazing 1015.2.1, 2406.4.4, 2407
Height 1015.3
Loads 1607.8
Mechanical equipment 1015.6
Opening limitations 1015.4
Parking garage 406.4.2
Ramps 1012.9
Residential 1015.3
Roof access 1015.7
Screen porches 1015.5
Stairs 1015.2
Vehicle barrier 406.4.3, 1607.8.3
Windows 1015.8
GUTTERS 1503.4.3
GYMNASIUMS 303.1
Group E 303.1.3
Live load . . . . . Table 1607.1
Occupant load 1004.1
GYPSUM . . . . . Chapter 25
Aggregate, exposed 2513
Board . . . . . 202, Chapter 25
Ceiling diaphragms 2508.5
Concrete, reinforced 2514
Construction 2508
Draftstopping 718.3.1
Exterior soffit . . . . . Table 2506.2
Fastening . . . . . Table 2306.3(3), 2508.1
Fire resistance 719, 722.2.1.4, 722.6.2
Fire-resistant joint treatment 2508.4
Inspection 2503
Lath 2507, 2510
Lathing and furring for cement plaster 719, 2510

Lathing and plastering 2507
Materials 2506
Panel products. . . . . 202, Chapter 25
Plaster, exterior 2512
Plaster, interior. 2511
Shear wall construction . . . . . Table 2306.3(3), 2308.9.3, 2505
Sheathing. . . . . Table 2308.5.11
Showers and water closets 2509
Stucco 2510
Veneer base 2507.2
Veneer plaster 2507.2
Vertical and horizontal assemblies 2504
Wallboard. . . . . .Table 2506.2
Water-resistant backing board. 2506.2, 2509.2

H

HANDRAILS. 1014
Alternating tread devices 1011.14
Assembly aisles 1029.15
Construction. 1014.4, 1014.5, 1014.6
Extensions 1014.6
Glazing. 2407
Graspability 1014.3
Guards 1015.3
Height 1014.2
Loads 1607.8
Location 1014.1, 1014.7, 1014.8, 1014.9
Ramps 1012.8
Stairs 1011.11
HARDBOARD. 202, 1404.3.2, 2303.1.7
HARDWARE
(see DOORS and LOCKS AND LATCHES)
HARDWOOD
Fastening 2304.10
Quality 2303.3
Veneer 1404.3.2
HAZARDOUS MATERIALS. 307, 414, 415
Control areas 414.2
Explosion control . . . . . .414.5.1, Table 414.5.1, 415.8, 415.11.5.5, 426.1.4
Special provisions 415.7
Sprinkler protection . . . . . .Table 414.2.5(1), Table 414.2.5(2), 415.4, 415.11.11, 903.2.5
Ventilation 414.3, 414.5.4, 415.8.11.3, 415.9.1.7, 415.11.1.6, 415.11.1.8.1, 415.11.3.2, 415.11.5.8, 415.11.6.4, 415.11.7, 415.11.10, 1203.6
Weather protection 414.6.1
HAZARDOUS OCCUPANCY (GROUP H),
(see HAZARDOUS MATERIALS). . . . 307, 414, 415
Alarm and detection 415.3, 415.5, 415.11.2, 415.11.3.5, 415.11.5.9, 415.11.8, 901.6.3, 907.2.5, 908.1, 908.2
Area 503, 505, 506, 507, 508
Dispensing 414.5, 414.6, 414.7.2, 415.6
Gas detection systems. 415.11.7
Group provisions
H-1 (detonation). 307.3, 415.6.1.1, 415.6.2 415.7, 415.7.1
H-2 (deflagration). 307.4, 415.8, 415.9
H-3 (physical hazard). 307.5, 415.8, 415.10
H-4 (health hazard) 307.6, 415.10
H-5 (semiconductor 307.7, 415.11
Height. 415.7, 415.8.1, 415.9.1.1, 415.8.1.6, 426.1.1, 503, 504, 505, 508
Incidental uses 509
Interior finishes. . . . . .416.2.1, 416.3.1, Table 803.11, 804
Live load. . . . . .Table 1607.1
Location on property 414.6.1.2, 415.6
Low hazard (See Factory – Group F-2 and Storage – Group S-2)
Means of egress
Aisles 107.5
Corridors 415.11.2
One means of egress. . . . . .Table 1006.2.1, Table 1006.3.2
Panic hardware 1010.1.10
Stairway, exit access 1019
Travel distance. .Table 1017.2, 1016.2.1, 1006.3.2
Mixed occupancies. 508.3, 508.4
Accessory 508.2
Moderate hazard (See Factory – Group F-1 and Storage – Group S-1)
Multiple hazards. 307.8
Occupancy exceptions. 307.1
Plumbing fixtures . . . . . Chapter 29
Prohibited locations 419.2
Risk category . . . . . .Table 1604.5
Smoke and heat removal. 910.2
Special provisions—General
Detached buildings 415.6.2, 415.8
Dry cleaning (see DRY CLEANING PLANTS)
Equipment platforms 505.3
Fire district D102.2.2
Fire separation distance. 415.6
Grain elevators. 426.1, 426.1.5
Grinding rooms 426.1.2

Separation from other occupancies 415.6.1, 508.2.4, 508.3.3, 508.4
Special provisions based on materials
Combustible liquids . . . . . Table 307.1(1), 307.4, 307.5, 414.2.5, 414.5.3, 415.9.2
Corrosives . . . . . 307.6, Table 414.2.5(1), 414.3, 415.10.3, Table 415.11.1.1.1
Cryogenic . . . . . Table 307.1(1), Table 414.5.1, Table 415.11.1.1.1
Explosives . . . 202, 307.3, 307.3.1, Table 415.6.2
Flammable liquids. 307.4, 307.5, 415.9.1
Flammable solids 307.5, 415.11.1.1.1
Health-hazard materials . . . . . 202, Table 414.2.5(1), 415.6, Table 415.11.1.1.1, 415.11.6.1, 415.11.7.2
Irritants . . . . . Table 414.2.5(1), Table 415.11.1.1.1
Liquid, highly toxic and toxic. . . . . 307.6, Table 414.2.5(1), 415.8.3, 415.9.3, Table 415.11.1.1.1, 908.3
Organic peroxides . . . . . Table 414.5.1, 415.6.1, 415.8.4, Table 415.11.1.1.1, 418
Oxidizers, liquid and solid. . . . . Table 414.2.5(1), Table 414.5.1, 415.8.4, Table 415.11.1.1.1,
Pyrophoric materials. . . . . 307.4, Table 307.1(1), Table 414.5.1, 415.7.1, 415.8.4, Table 415.11.1.1.1
Sensitizers . . . . . Table 415.11.1.1.1
Solids, highly toxic and toxic. . . . . 307.6, Table 414.2.5(1), 415.10.4, Table 415.11.1.1.1, 908.3
Unstable materials . . . . . 307.3, Table 414.2.5(1), Table 414.5.1, 415.5.4, Table 415.11.1.1.1
Water-reactive materials. . . . . Table 414.5.1, 415.8.3, 415.8.4, 415.8.5, 415.11, Table 415.11.1.1.1
Sprinkler protection. 415.2, 415.11.6.4, 415.11.9, 415.11.10.1, 415.11.11, 705.8.1, 903.2.5
Standby, emergency power 2702.2.8, 2702.2.13, 2702.2.14
Storage . . . . . 413, 414.1, 414.2.5, 414.5, 414.6, 414.7.1, 415.6, Table 415.6.2, 415.7.1, 415.9.1, 426.1
Unlimited area 507.8
HEAD JOINT, MASONRY. 202
HEADROOM 406.4.1, 505.1, 1003.2, 1003.3, 1010.1.1, 1010.1.1.1, 1011.3, 1012.5.2, 1208.2
HEALTH CARE (see INSTITUTIONAL I-1 AND INSTITUTIONAL I-2)
Ambulatory care facilities 202, 422
Clinics, outpatient 304.1
Hospitals 308.4
HEALTH-HAZARD MATERIALS . . . . . 307.2, Table 414.2.5(1), 415.2, 415.11.1.1.1, Table 415.11.6.1
HEAT VENTS 910
HEATING (see MECHANICAL) 101.4.2
Aircraft hangars. 412.4.4
Fire pump rooms. 913.3
Fireplace 2111
Masonry heaters 2112
Parking garages 406.4.7
Repair garages 406.8.4
HEIGHT, BUILDING 503, 504, 505, 508, 510
Limitations. 503
Mixed construction types 510
Modifications. 504
Roof structures 504.3
HELIPORT
Definition. 202
Live loads 1607.6
HIGH-PILED COMBUSTIBLE STORAGE 413, 907.2.15, 910.2.2
HIGH-RISE BUILDINGS 403
Alarms and detection 403.4.1, 403.4.2, 907.2.13
Application 403.1
Construction 403.2
Elevators. 403.6, 1009.2.1, 3007, 3008
Emergency power. 403.4.8, 2702.2.9
Emergency systems. 403.4
Fire command station 403.4.6
Fire department communication 403.4.3, 403.4.4
Fire service elevators 403.6.1, 3007
Occupant evacuation elevators. 403.6.2, 3008
Smoke removal. 403.4.6
Smokeproof enclosure 403.5.4, 1023.11
Sprayed fire-resistant materials (SFRM). 403.2.4
Sprinkler protection. 403.3, 903.2.11.3
Stairways 403.5
Standby power 403.4.7, 2702.2.2, 2702.2.9
Structural integrity. 403.2.3, 1615
Super high-rise (over 420 feet) 403.2.1, 403.2.3, 403.2.4, 403.3.1, 403.5.2
Voice alarm. 403.4.3, 907.2.13
Zones 907.6.3, 907.6.4
HISTORIC BUILDINGS. 101.4.8
Flood provisions G105.3

HORIZONTAL ASSEMBLY 711
Continuity 508.2.5.1, 711.2.2, 711.2.3, 713.11, 713.12
Fire-resistance rating . . . . . 603.1(1), 603.1(22), 603.1(23), 703, 704.4.2, 707.3.10, 711.2.4
Glazing, rated 716.6
Group I-1 . . . . . 420.3
Group R 420.3
Incidental 509.4
Insulation 720, 807, 808
Joints 715, 2508.4
Non-fire-resistance rating 711.3
Opening protection . . . 712.1.13.1, 714.4, 716, 717.6
Shaft enclosure 713.1
Special provisions
Aircraft hangars 412.4.4
Atrium 404.3, 404.6
Covered and open mall buildings 402.4.2.3, 402.8.7
Fire pumps 913.2.1
Flammable finishes 416.2
Group H-2 . . . . . 415.9.1.1, 415.9.1.2
Groups H-3 and H-4 . . . . . 415.10.2
Group H-5 . . . . . 415.11.1.2, 415.11.5.1
Group I-2 . . . . . 407.5.3
Groups I-1, R-1, R-2 and R-3 . . . . . 420.3
Hazardous materials 414.2
High-rise 403.2.1, 403.3, 403.4.7.1
Hydrogen fuel gas 421.4
Organic coating 418.4, 418.5, 418.6
Stages and platforms 410.4, 410.5.1
HORIZONTAL EXIT 1026
Accessible means of egress 1009.2, 1009.2.1, 1009.3, 1009.4, 1009.6, 1009.6.2
Doors 1026.3
Exit discharge 1028.1
Fire resistance 1026.2
Institutional I-2 occupancy 407.4, 1026.1
Institutional I-3 occupancy 408.2, 1026.1
Refuge area (see REFUGE AREAS)
HORIZONTAL FIRE SEPARATION (see HORIZONTAL ASSEMBLY)
HOSE CONNECTIONS (see STANDPIPES, REQUIRED)
HOSPITAL (see INSTITUTIONAL GROUP I-2) 308.4, 407
HURRICANE-PRONE REGIONS (see WIND LOADS) 202
HURRICANE SHELTER (see STORM SHELTER)
HURRICANE SHUTTERS 1609.1.2
HYDROGEN FUEL GAS ROOMS . . . . 421, Table 509
HYPERBARIC FACILITIES 425

I

ICE-SENSITIVE STRUCTURE
Atmospheric ice loads 1614.1
Definition 202
IDENTIFICATION, REQUIREMENTS FOR
Fire barriers 703.6
Fire partitions 703.6
Fire wall 703.6
Glazing 2403.1, 2406.3
Inspection certificate 1702.1
Labeling 1703.5
Preservative-treated wood 2303.1.9.1
Smoke barrier 703.6
Smoke partition 703.6
Steel 2203.1
IMPACT LOAD 202, 1603.1.1, 1607.9
INCIDENTAL USES
Area 509.3
Occupancy classification 509.2
Separation and protection 509.4
INCINERATOR ROOMS . . . . . Table 509, 1006.2.2.2
INDUSTRIAL (see FACTORY OCCUPANCY)
INSPECTIONS 110, 1704, 1705
Alternative methods and materials 1705.1.1
Approval required 110.6
Concrete construction 110.3.1, 110.3.2, 110.3.9, 1705.3
Concrete slab 110.3.2
EIFS 110.3.9, 1705.16
Energy efficiency 110.3.7
Fabricators 1704.2.5
Fees 109
Final 110.3.10
Fire-extinguishing systems 904.4
Fire-resistant materials 110.3.9, 1705.14, 1705.15
Fire-resistant penetrations 110.3.6, 1705.17
Footing or foundation 110.3.1, 110.3.9, 1705.3, 1705.4, 1705.7, 1705.8, 1705.9
Flood hazard 110.3.3, 110.3.10.1
Frame 110.3.4
Lath or gypsum board 110.3.5, 2503
Liability 104.8
Masonry 110.3.9, 1705.4
Preliminary 110.2
Required 110.3
Right of entry 104.6
Seismic 1705.12
Smoke control 104.16, 909.18.8, 1705.18

Soils 110.3.9, 1705.6
Special (see SPECIAL INSPECTIONS AND TESTS) 110.3.9, 1704, 1705
Sprayed fire-resistant materials 1705.14
Sprinkler protection 903.5
Steel 110.3.4, 110.3.9, 1705.2
Third party 110.4
Welding 110.3.9, 1705.2, 2204.1
Wind 110.3.9, 1705.10
Wood 110.3.9, 1705.5

INSTITUTIONAL I-1
[see INSTITUTIONAL OCCUPANCY (GROUP I) and RESIDENTIAL (GROUP R-4)] 308.3, 420
Accessibility 1106.2, 1107.2, 1107.3, 1107.4, 1107.5.1
Alarm and detection 420.6, 907.2.6.1, 907.2.10, 907.2.11.2, 907.5.2.3.2
Combustible decorations 806.1
Emergency escape and rescue 1030
Means of egress
Aisles 1018.5
Corridors 1020.1
Stairway, exit access 1019
Travel distance 1017.2, 1006.3.2
Occupancy exceptions . . . . . 308.3.1 through 308.3.4
Separation, unit 420.2, 420.3
Sprinkler protection 420.4, 903.2.6, 903.3.2

INSTITUTIONAL I-2
[see INSTITUTIONAL OCCUPANCY (GROUP I)] 308.4, 407
Accessibility 1106.3, 1106.4, 1106.7.2, 1107.2, 1107.3, 1107.4, 1107.5.2, 1107.5.3, 1107.5.4, 1109.2, E106.4.6
Alarms and detection 407.7, 407.8, 907.2.6.2
Care suites 407.4.4
Combustible decorations 806.1
Electrical systems 407.10, 2702.1.7, 2702.2.6
Hyperbaric facilities 425
Means of egress 407.4
Aisles 1018.5
Corridors 407.2, 407.3, 407.4, 1020.2
Doors 407.3.1, 1010.1.9.6, 1010.1.9.8
Exterior exit stairway 1027.2
Hardware 1010.1.9.3, 1010.1.9.6
Stairway, exit access 1019.3
Travel distance 407.4
Occupancy exceptions . . . . . 308.4.1 through 308.4.4
Separation 410
Smoke barriers 407.5
Smoke compartment 407.2.1, 407.2.3, 407.5
Smoke partitions 407.3
Sprinkler protection 407.6, 903.2.6, 903.3.2
Yards 407.9

INSTITUTIONAL I-3
[see INSTITUTIONAL OCCUPANCY (GROUP I)] 308.5, 408
Accessibility 1103.2.13, 1105.4, 1107.2, 1107.3, 1107.4, 1107.5.5, 1108.4.2, 1109.11.2, E104.2.2, E106.4.8
Alarm and detection 408.10, 907.2.6.3
Combustible decorations 806.1
Means of egress 408.2, 408.3, 408.4
Aisles 1018.5
Doors 408.4, 1010.1.1, 1010.1.2
Exit discharge 408.3.6
Exit sign exemption 1013.1
Hardware 408.4, 1010.1.9.3, 1010.1.9.7, 1010.1.9.8
Stairway, exit access 1019.3
Travel distance 408.6.1, 408.8.1, 1017.2, 1006.3.2
Security glazing 408.7
Separation 408.5, 408.8
Smoke barrier 408.6
Smoke compartment 408.4.1, 408.6, 408.9
Sprinkler protection 408.11, 903.2.6
Standby/emergency power 2702.2.7

INSTITUTIONAL I-4
[see INSTITUTIONAL OCCUPANCY (GROUP I)] 308.6
Accessibility 1103.2.12
Alarms and detection 907.2.6
Corridor rating 1020.1
Educational 303.1.3, 305.1
Means of egress
Day care 1006.2.2.4
Stairway, exit access 1019
Travel distance 1016.2.1, 1017.2, 1006.3.2
Occupancy exceptions 308.6.1, 308.6.2, 308.6.3, 308.6.4
Sprinkler protection 903.2.6

INSTITUTIONAL OCCUPANCY (GROUP I) 308
Accessory 508.2
Adult care 308.6
Area 503, 505, 506, 507, 508
Child care 303.1.3, 308.6.4, 308.11, 310.1
Group specific provisions
Group I-1 (see INSTITUTIONAL I-1) 308.2
Group I-2 (see INSTITUTIONAL I-2) . . . 308.3, 407
Group I-3 (see INSTITUTIONAL I-3) . . . 308.4, 408
Group I-4 (see INSTITUTIONAL I-4) 308.1, 310.5.1
Height 503, 504, 505, 508

Incidental uses 509
Interior finishes . . . . . Table 803.11, 804
Live load . . . . . Table 1607.1
Means of egress
Corridors 1020.2
Stairway, exit access 1019
Travel distance 407, 1006.3.2, 1016.2.1, 1017.2,
Mixed occupancies 508.3, 508.4
Occupancy exceptions . . . . . 303.1.1, 303.1.2, 308.3.3, 308.3.4, 308.4.2, 308.6.1 through 308.6.4, 310.5.1
Plumbing fixtures 2902
Risk category . . . . . Table 1604.5
Standby, emergency power 2702.2
INSULATION
Concealed 720.2
Duct insulation 720.1
Exposed 720.3
Fiberboard 720.1, 1508.1.1, 2303.1.6.2, 2303.1.6.3
Foam plastic (see FOAM PLASTICS) 720.1
Loose fill 720.4, 720.6
Pipe insulation 720.1, 720.7
Reflective plastic core 2614
Roof 720.5, 1508
Sound 720, 807, 1207
Thermal 720, 807, 1508
INTERIOR ENVIRONMENT
Lighting 1205
Rodentproofing . . . . . 415.11.1.6, Appendix F
Sound transmission 1207
Space dimensions 1208
Temperature control 1204
Ventilation 409.3, 414.3, 415.9.1.7, 1203.5
Yards or courts 1206.2, 1206.3
INTERIOR FINISHES . . . . . Chapter 8
Acoustical ceiling systems 807, 808
Application 803.12, 804.4
Atriums 404.8
Children's play structures 424
Covered and open mall buildings 402.6
Decorative materials 801.1.2, 806
Floor finish 804, 805
Foam plastic insulation 2603.3, 2603.4
Foam plastic trim 806.5, 2604.2
Insulation 807
Light-transmitting plastics 2606
Signs 402.6.4, 2611
Trim 806.7, 806.8
Wall and ceiling finishes 803
Wet location 1210
INTERPRETATION, CODE 104.1

J

JAILS (see INSTITUTIONAL I-3) 308.5, 408
JOINT
Gypsum board 2508.4
Lumber sheathing 2308.7.11
Shotcrete 1908.7
Waterproofing 1805.3.3
JOINTS, FIRE-RESISTANT SYSTEMS 715
Special inspection 1705.17

K

KIOSKS 402.6.2
KITCHENS 303.3, 306.2
Accessibility 1109.4
Dimensions 1208
Means of egress 1016.2
Occupant load . . . . . Table 1004.1.1
Sinks 2902.1

L

LABORATORIES
Classification of 304.1
Hazardous materials 414, 415
Incidental uses . . . . . Table 509
LADDERS
Boiler, incinerator and furnace rooms 1006.2.2.1
Construction 1011.15, 1011.16, 1014.2, 1014.6, 1015.3, 1015.4
Emergency escape window wells 1030.5.2
Group I-3 . . . . . 408.3.5, 1011.15, 1011.16
Heliport 412.8.3
Refrigeration machinery room 1006.2.2.2
Ships ladders 1011.14
Stage 410.6.3.4
LAMINATED TIMBER, STRUCTURAL GLUED 602.4, 2303.1, 2303.1.3, 2304.12.2.4, 2306.1, 2308.4.3, 2308.7.9
LANDINGS
Doors 1010.1.6
Ramp 1012.6
Stair 1011.6
LATH, METAL OR WIRE . . . . . Table 2507.2
LAUNDRIES . . . . . 304.1, 306.2, Table 509
LAUNDRY CHUTE 713.13, 903.2.11.2
LEGAL
Federal and state authority 102.2

Liability 104.8
Notice of violation 114.2, 116.3
Registered design professional 107.1, 107.3.4
Right of entry 104.6
Unsafe buildings or systems 116
Violation penalties 114.4
LIBRARIES
Classification, other than school 303.1.3, 303.4
Classification, school 303.1.3, 305.1
Live load . . . . . Table 1607.1
LIGHT, REQUIRED 1205
Artificial 1205.3
Emergency (see EMERGENCY LIGHTING)
Means of egress 1008.2
Natural 1205.2
Stairways 1205.4
Yards and courts 1206
LIGHT-FRAME CONSTRUCTION
Definition 202
Cold-formed steel 2211
Conventional (wood) 2308
LIGHTS, PLASTIC CEILING DIFFUSERS 2606.7
LINEN CHUTE 713.13, 903.2.11.2
LINTEL
Adobe 2109.3.4.9
Fire resistance 704.11
Masonry, wood support 2304.13
LIQUEFIED PETROLEUM GAS . . . . . Table 414.5.1, 415.9.2
LIVE LOADS 202, 1607
Construction documents 107.2, 1603.1.1
Posting of 106.1
LIVE/WORK UNITS 202, 310.4, 419
Accessibility 1107.6.2.1
Separation 508.1
LOAD AND RESISTANCE FACTOR DESIGN (LRFD) 1602.1
Factored load 202
Limit state 202
Load combinations 1605.2
Load factor 202
Resistance factor 202
Wood design 2301.2, 2307
LOAD COMBINATIONS 1605
Allowable stress design 1605.3
Load and resistance factor design 1605.2
Strength design 1605.2
LOADS 106, 202
Atmospheric ice 1614
Combinations 1605
Dead 202, 1606
Factored load 202, 1604.2
Flood 1603.1.7, 1612
Impact 202, 1607.9
Live 419.6, 1603.1.1, 1607
Load effects 202
Nominal load 202, 1604.2
Rain 1611
Seismic 1603.1.5, 1613
Snow 1603.1.3, 1608
Soil lateral 1610
Wind 1603.1.4, 1609
LOBBIES
Assembly occupancy 1029.4
Elevator 405.4.3, 1009.2.1, 1009.4, 3006, 3007.6, 3008.6
Exit discharge 1028.1
Underground buildings 405.4.3
LOCKS AND LATCHES 1010.1.9, 1010.1.10
Access-controlled egress 1010.1.9.8
Delayed egress locks 1010.1.9.7
Electromagnetically locked 1010.1.9.9
Group I-2 . . . . . 407.4.1.1, 1010.1.9.6
Group I-3 . . . . . 408.4, 1010.1.9.10
Group R-4 . . . . . 1010.1.9.5.1
High-rise 403.5.3
Toilet rooms 2902.3.5
LUMBER
General provisions . . . . . Chapter 23
Quality standards 2303

M

MAINTENANCE . . . . . .
Means of egress 1001.3, 3310.2
Property 101.4.4
MALL
(see COVERED AND OPEN MALL BUILDINGS)
MANUAL FIRE ALARM BOX 907.4.2
MANUFACTURED HOMES
Flood resistant G501
MARQUEES 202, 3106, H113
Drainage, water 3201.4
Construction 3106.5
Live load . . . . . Table 1607.1, 1607.12
Prohibited location 3106.4
Roof construction 3106.3
MASONRY
Adhered veneer 1405.10
Adobe 2109.3
Anchorage 1604.8.2
Anchored veneer 1405.6

Architectural cast stone 2103.1
Ashlar stone 202
Autoclaved aerated concrete (AAC) 202
Calculated fire resistance 722.4
Chimneys 2113
Construction 2104, 2109.2.2
Corbelled 2104.1.2
Dampproofing 1805.2.2
Design, methods 2101.2, 2107, 2108, 2109
Fire resistance, calculated 722.3.2, 722.3.4
Fireplaces 2111
Floor anchorage 1604.8.2
Foundation walls 1807.1.5
Foundations, adobe 2109.3.4.5
Glass unit 2110
Grouted 202
Headers (see BONDING, MASONRY) 2109.2
Heaters 2112
Inspection, special 1705.4
Joint reinforcement 2103.4
Materials 2103
Penetrations 714
Quality assurance 2105
Rodentproofing . . . . . Appendix F
Roof anchorage 1604.8.1
Rubble stone 202
Seismic provisions 2106
Serviceability 1604.3.4
Stone 2109.2
Support 2304.13
Surface bonding 2103.2.2
Veneer 1405.6, 1405.10, 2101.2.1, 2308.6.10
Wall, composite 202
Wall, hollow 202
Wall anchorage 1604.8.2
Waterproofing 1805.3.2
Wythe 202

MATERIALS
Alternates 104.11
Aluminum . . . . . Chapter 20
Concrete . . . . . Chapter 19
Glass and glazing . . . . . Chapter 24
Gypsum . . . . . Chapter 25
Masonry . . . . . Chapter 21
Noncombustible 703.4
Plastic . . . . . Chapter 26
Steel . . . . . Chapter 22
Testing (see TESTING) 1707
Wood . . . . . Chapter 23

MEANS OF EGRESS . . . . . Chapter 10
Accessible 1009, 2702.2.2
Aircraft related 412.3.2, 412.3.3, 412.3.4, 412.5.2, 412.7.1
Alternating tread device 412.7.3, 505.3, 1006.2.2.1, 1006.2.2.2, 1011.14,
Ambulatory care facilities 422.3.1, 422.3.3
Assembly 1009.1, 1029
Atrium 404.9, 404.10, 707.3.6
Capacity 1005.3
Ceiling height 1003.2
Child care facilities (see Day care facilities)
Construction drawings 107.2.3
Configuration 1007
Convergence 1005.6
Covered and open mall buildings 402.8
Day care facilities . . . . . 308.6, 310.5.1, Table 1004.1.1, 1006.2.2.4
Distribution 1005.5
Doors 1005.7, 1006.2, 1010, 1022.2, 2702.2.10
During construction 3303.3, 3310
Elevation change 1003.5
Elevators 403.5.2, 403.6.1, 1003.7, 1009, 3008
Emergency escape and rescue 1030
Encroachment 1005.7
Equipment platform 505.3
Escalators 1003.7
Existing buildings 1009.1, 3310
Exit (see EXIT) . . . . . 1022 through 1027
Exit access (see EXIT ACCESS) . . . . . 1016 through 1021
Exit discharge (see EXIT DISCHARGE) 1028
Exit enclosures 1023.2
Exit passageway (see EXIT PASSAGWAY) 1024
Exit signs 1013, 2702.2.5,
Fire escapes 412.8.3
Floor surface 804, 1003.4
Gates 1010.2
Group I-2 . . . . . 407.2, 407.3, 407.4, 1019.3
Group I-3 . . . . . 408.2, 408.3, 408.4, 408.6, 408.8, 1019.3
Guards 1015
Handrails 1014
Hazardous materials 414.6.1.2, 415.11.2, 415.11.5.6
Headroom 1003.2, 1003.3
Heliports 412.8.3
High-hazard Group H 415.11.2
High-rise 403.5, 403.6
Illumination 1008, 2702.2.4
Interior finish 803.11, 804

Ladders (see LADDERS)
Live loads . . . . . Table 1607.1
Live/work units 419.3
Mezzanines 505.2.2, 505.2.3, 1004.1.1.2, 1009.1
Moving walk 1003.7
Number 1006
Occupant load 1004.1, 1004.1.2, 1004.2
Parking 406.5.7
Protruding objects 1003.3, 1005.7
Ramps 1012, 1027
Scoping 101.3, 105.2.2, 108.2, 1001.1
Seating, fixed 1009.1, 1029
Special amusement 411.7
Stages 410.3.3, 410.6
Stairways 403.5, 404.6, 1005.3.1, 1011, 1023.2, 1027
Temporary structures 3103.4
Travel distance (see TRAVEL DISTANCE) 1016.2.1, 1017
Turnstile 1010.3
Underground buildings 405.5.1, 405.7
Width 1005.1, 1005.2, 1005.4, 1011.2, 1012.5.1, 1020.2, 1029.6, 1029.8

MECHANICAL (see AIR CONDITIONING, HEATING, REFRIGERATION, AND VENTILATION) . . . 101.4.2
Access 1011.12, 1209.3
Air transfer openings 705.10, 706.11, 707.10, 708.9, 709.8, 711.7, 713.10, 714.1.1, 717
Chimneys (see CHIMNEYS)
Code . . . . . Chapter 28
Disconnected 3303.6
Ducts 704.8, 705.10, 706.11, 707.10, 712.1.6, 712.1.10.3, 713.10, 708.9, 709.8, 710.8, 711.7, 714.1.1, 717
Encroachment, public right-of-way 3202.3.2
Equipment on roof 1510, 1511.2
Equipment platforms 505.3
Factory-built fireplace 2111.14.1
Fireplaces 2111
Incidental use room . . . . . Table 509
Motion picture projection room 409.3
Permit required 105.1, 105.2
Roof access 1011.12
Seismic inspection and testing 1705.12.6, 1705.13.2
Smoke control systems 909
Systems . . . . . 202, Chapter 28

MECHANICALLY LAMINATED DECKING 2304.9.3

MEMBRANE ROOF COVERINGS 1507.11, 1507.12, 1507.13

MEMBRANE STRUCTURES 2702.2.12, 3102

MENTAL HOSPITALS (see INSTITUTIONAL I-2)

MERCANTILE OCCUPANCY (GROUP M) 309
Accessible 1109.12
Alarm and detection 907.2.7
Area 503, 505, 506, 507, 508
Covered and open mall buildings 402
Hazardous material display and storage 414.2.5
Height 503, 504, 505, 508
Incidental uses 509
Interior finishes . . . . . Table 803.11, 804
Live load . . . . . Table 1607.1
Means of egress
  Aisles 1018.3, 1018.4
  Stairway, exit access 1019
  Travel distance 402.8, 1016.2.1, 1017.2, 1006.3.2
Mixed occupancies 508.3, 508.4
  Accessory 508.2
  Live/work units 419
  Mall buildings 402
  Parking below/above 510.7, 510.8, 510.9
  Special mixed 510.2
Occupancy exceptions 307.1.1
Plumbing fixtures 2902
Sprinkler protection 903.2.7
Standpipes 905.3.3
Unlimited area 507.5, 507.4, 507.13

METAL
Aluminum . . . . . Chapter 20
Roof coverings 1504.3.2, 1507.5
Steel . . . . . Chapter 22
Veneer 1404.5

MEZZANINES 505
Accessibility 1104.4, 1108.2.4, 1108.2.9
Area limitations 505.2.1, 505.3.1
Egress 505.2.2, 505.2.3, 1004.6, 1009.1
Equipment platforms 505.3
Guards 505.3.3, 1015.1
Height 505.2, 1003.2
Occupant load 1004.1.1.2
Stairways 712.1.11, 1011.14, 1023.2

MIRRORS 1010.1, 2406.1

MIXED OCCUPANCY (see OCCUPANCY SEPARATION)

MODIFICATIONS 104.4, 104.10

MOISTURE PROTECTION 1210, 1403.2, 1503

MONASTERIES 310.4

MORTAR 202
Ceramic tile 2103.2.3
Dampproofing 1805.2.2
Fire resistance 714.3.1, 714.4.1
Glass unit masonry 2110.1.1
Masonry 2103.2
Rodentproofing . . . . . Appendix F
MOTELS 310.3, 310.4
MOTION PICTURE PROJECTION ROOMS 409
Construction 409.2
Exhaust air 409.3.2, 409.3.3
Lighting control 409.4
Projection room 409.3
Supply air 409.3.1
Ventilation 409.3
MOTOR FUEL-DISPENSING SYSTEM 406.5
Accessibility 1109.14
MOTOR VEHICLE FACILITIES 304, 311, 406.7
MOVING, BUILDINGS 101.4.8, D103.3
MOVING WALKS 3004.2
Means of egress 1003.7

N

NAILING 202, 2303.6, 2304, 2304.10
NONCOMBUSTIBLE BUILDING MATERIAL 703.4
NURSES STATIONS (See CARE PROVIDER STATIONS)
NURSING HOMES (see INSTITUTIONAL, GROUP I-2) 308.4, 407

O

OCCUPANCY
Accessory 508.2
Certificates (see CERTIFICATE OF OCCUPANCY)
Change (see CHANGE OF OCCUPANCY)
Floor loads . . . . . Table 1607.1
Special . . . . . Chapter 4
OCCUPANCY CLASSIFICATION 302
Covered and open mall buildings 402
HPM 415.11
Mixed 508, 510
Special . . . . . Chapter 4
OCCUPANCY SEPARATION
Accessory 508.2
Aircraft related 412.5.1
Covered mall and open mall building 402.4.2
Mixed occupancy 508, 510, 707.3.9
Private parking garages . . . . . 406.3.4, Table 508.4
Repair garages 406.8.1
Required fire resistance . . . . . Table 508.4, 510
OCCUPANT EVACUATION ELEVATORS 403.5.2, 403.6.2, 3008
OCCUPANT LOAD
Actual 1004.1.2
Certificate of occupancy 111
Covered and open mall building 402.8.2
Cumulative 1004.1.1
Determination of 1004.1, 1004.1.1, 1004.6
Increased 1004.2
Outdoors 1004.5
Seating, fixed 1004.4
Signs 1004.3
OFFICE BUILDINGS (See GROUP B OCCUPANCIES)
Classification 304
Live loads . . . . . Table 1607.1, 1607.5
OPEN MALL BUILDINGS (see COVERED AND OPEN MALL BUILDINGS)
OPENING PROTECTION, EXTERIOR WALLS 705.8
OPENING PROTECTION, FLOORS (see VERTICAL OPENING PROTECTION)
OPENING PROTECTIVES 705.8, 706.8, 707.6, 708.6, 709.5, 712.1.13.1, 713.7, 716
Automatic-closing devices 909.5.3
Fire door and shutter assemblies 705.8.2, 712.1.13.1, 716.5
Fire windows 716.6
Glass unit masonry (see GLASS UNIT MASONRY) 2110.1.1
Glazing 716.6
ORGANIC COATINGS 418
ORGANIC PEROXIDES 307.4, 307.5
OXIDIZERS, LIQUID AND SOLID 307.3, 307.4, 307.5

P

PANIC HARDWARE 1010.1.10
PARAPET, EXTERIOR WALL 705.11, 2109.3.4.3
Construction 705.11.1
Fire wall 706.6
Height 705.11.1
PARKING, ACCESSIBLE 1106, 1111.1
PARKING GARAGES 406.4, 406.5, 406.6
Accessibility 1105.1.1, 1106.1, 1106.7.4, 1111.1
Barriers, vehicle 202, 406.4.3, 1607.8.3
Classification 311, 406.3, 406.4

Construction type . . . . . 406.5.1, Table 601
Enclosed
(see PARKING GARAGE, ENCLOSED) 406.6
Gates 3110
Guards 406.4.2, 2407.1.3
Height, clear 406.4.1
Live loads . . . . . Table 1607.1, 1607.10.1.3
Means of egress 1006.3.1, 1006.2.2.5, 1019
Occupancy separation 508, 510
Open (see PARKING GARAGE, OPEN) 406.5
Special provisions 510
Sprinkler protection 903.2.10
Underground 405
Vertical openings 712.1.10
PARKING GARAGES, ENCLOSED 406.6
Area and height [see STORAGE
OCCUPANCY (GROUP S)] 406.6.1
Means of egress 1003.2, 1006.3.2, 1012.1
Ventilation 406.6.2
PARKING GARAGES, OPEN 202, 406.5
Area and height [see STORAGE
OCCUPANCY (GROUP S)] 406.5,
406.5.1, Table 406.5.4
Construction type 406.5.1
Means of egress 406.5.7, 1003.2,
Table 1006.2.1, 1006.3,
1009.3, 1009.4, 1012.1,
1017.3, 1019, 1020.1, 1028.1
Mixed occupancy 406.5.3
Standpipes 406.5.8
Ventilation 406.5.10
PARTICLEBOARD 202
Draftstopping 718.3.1
Moisture protection 1403.2, 1405.2
Quality 2303.1.8
Veneer 1405.5
Wall bracing 2308.6.3
PARTITIONS
Fabric partition 202, 1607.14.1
Fire (see FIRE PARTITION)
Live loads 1607.5, 1607.14
Materials . . . . . 602.4.6, 603.1(1), 603.1(11)
Occupancy, specific 708.1
Smoke (see SMOKE PARTITION)
Toilets 1210
PARTY WALLS
(see FIRE WALLS) . . . . . 706.1.1, Table 716.6
PASSAGEWAY, EXIT (see EXIT) 1024.1
PASSENGER STATIONS 303.4
PATIO COVERS . . . . . 2606.10, Appendix I
PEDESTRIAN
Protection at construction site 3303.2, 3306
Walkways and tunnels 3104, 3202.3.4
PENALTIES 114.4
PENETRATION-FIRESTOP SYSTEM
Fire-rated walls 714.3.2
Fire-rated horizontal assemblies 714.4.2
PENETRATIONS 714, 717
Fire-resistant assemblies
Exterior wall 705.10
Fire barrier 707.7, 707.10
Fire partition 708.7, 708.9
Fire wall 706.9, 706.11
Horizontal assemblies 714.4
Shaft enclosures 712.1, 713.1, 713.8, 713.10
Smoke barriers 709.6, 709.8, 714.4.4
Smoke partitions 710.6, 710.7
Special inspection 1705.17
Walls 714.3
Nonfire-resistant assemblies 714.5
PERFORMANCE CATEGORY
Definition 202
Wood structural panels 2302.1.5
PERLITE . . . . . Table 721.1(1), Table 2507.2
PERMITS 105
Application for 104.2, 105.1, 105.3
Drawings and specifications 107.2.1
Expiration 105.5
Fees 109
Liability for issuing 104.8
Placement of permit 105.7
Plan review 104.2, 107.3
Suspension or revocation 105.6
Time limitations 105.3.2, 105.5
PHOTOVOLTAIC PANEL SYSTEMS 202
Fire classification 1505.8, 1505.9
Panels/modules 1512
Photovoltaic module 202
Photovoltaic panel 202
Roof live loads 1607.12.5
Rooftop mounted 1510.7
PIER FOUNDATIONS
(see FOUNDATION, SHALLOW)
PILE FOUNDATIONS (see FOUNDATION, DEEP)
PIPES
Embedded in fire protection 704.8
Insulation covering 720.1, 720.7
Penetration protection 714, 1023.5
Under platform 410.4
PLAIN CONCRETE (see CONCRETE) 1906
PLAN REVIEW 107.3
PLASTER
Fire-resistance requirements 719

Gypsum 719.1, 719.2
Inspection 110.3.5
Portland cement. . . . . 719.5, Table 2507.2, Table 2511.1.1
PLASTIC. . . . . Chapter 26
Approval for use. 2606.2
Composites 2612
Core insulation, reflective plastic 2614
Decking 1410, 2612
Fiber-reinforced polymer 2613
Finish and trim, interior 2604
Light-transmitting panels 2401.1, 2607
Roof panels 2609
Signs 402.6.4, 2611, D102.2.10, H107.1.1
Thermal barrier 2603.4
Veneer 1404.8, 2605, D102.2.11
Walls, exterior 2603.4.1.4, 2603.5
PLASTIC, FOAM
Children's play structures 424.2
Insulation (see FOAM PLASTICS) 2603
Interior finish 803.4, 2603.9
Malls 402.6.2, 402.6.4.5
Stages and platforms. 410.3.6
PLASTIC, LIGHT-TRANSMITTING
Awnings and patio covers 2606.10
Bathroom accessories 2606.9
Exterior wall panels 2607
Fiber-reinforced polymer 2613.4
Fiberglass-reinforced polymer 2613.4
Glazing. 2608
Greenhouses 2606.11
Light-diffusing systems 2606.7
Roof panels 2609
Signs, interior. 2611
Skylight 2610
Solar collectors 2606.12
Structural requirements 2606.5
Unprotected openings 2608.1, 2608.2
Veneer, exterior . . . . . 603.1(15), 603.1(17), 2605
Wall panels 2607
PLATFORM
(see STAGES AND PLATFORMS) 410
Construction. 410.4
Temporary 410.4.1
PLATFORM, EQUIMENT
(see EQUIPMENT PLATFORM)
PLATFORM LIFTS, WHEELCHAIR
Accessible means of egress 1009.2, 1009.5, 1109.4, 2702.2.2
Accessibility 1109.8
PLUMBING
(see TOILET AND TOILET ROOMS) . . . . . .101.4.3, 105.2, Chapter 29
Aircraft hangars, residential 412.5.4
Facilities, minimum. 2902, 3305.1
Fixtures . . . . . .Table 2902.1
Room requirements 1210, 2606.9
PLYWOOD
(see WOOD STRUCTURAL PANELS). 202
Preservative-treated. 2303.1.9.1
PRESCRIPTIVE FIRE RESISTANCE. 721
PRESERVATIVE-TREATED WOOD 202
Fastenings 2304.10.5
Quality 2303.1.9
Required. 1403.6, 2304.12
Shakes, roof covering 1507.9.6, 1507.9.8
PROJECTION ROOMS
Motion picture. 409
PROJECTIONS, COMBUSTIBLE 705.2.3, 1406.3
PROPERTY LINE
(see FIRE SEPARATION DISTANCE) 705.3
PROPERTY MAINTENANCE. 101.4.4
PROSCENIUM
Opening protection. 410.3.5
Wall 410.3.4
PSYCHIATRIC HOSPITALS
(see INSTITUTIONAL I-2). 308.4
PUBLIC ADDRESS SYSTEM
(see EMERGENCY COMMUNICATIONS)
Covered and open mall buildings. 402.7, 907.2.20, 2702.2.4
Special amusement buildings 411.6
PUBLIC PROPERTY . . . . . Chapter 32, Chapter 33
PUBLIC RIGHT-OF-WAY
Encroachments . . . . . Chapter 32
PYROPHORIC MATERIALS . . . Table 307.1(1), 307.4

R

RAILING (see GUARDS AND HANDRAILS)
RAMPS 1012
Assembly occupancy 1029.13
Construction. . . . . 1012.2 through 1012.5.3, 1012.7, 1012.10
Exit. 1023
Exit access. 1019
Exterior. 1027
Guards 1012.9, 1015, 1607.8
Handrails 1012.8, 1014, 1607.8
Interior 1012.2
Landings. 1012.6

Parking garage 406.4.4
Slope 1012.2
RECREATIONAL FACILITIES
Accessibility 1110
Amusement rides 1110.4.8
Animal containment areas 1110.4.7
Areas of sports activity 202, 1110.4.1
Boat slips 1110.4.9
Boxing rings 1110.4.5
Bowling lanes 1110.4.3
Court sports 1110.4.4
Exercise equipment 1110.4.10
Fishing piers 1110.4.11
Hot tubs 1110.4.13
Miniature golf 1110.4.12
Referee stands 1110.4.6
Shooting facilities 1110.4.14
Swimming pools 1110.4.13
Team or player seating 1110.4.2
Children's play structure 402.6.3, 424
Special amusement buildings (see AMUSEMENT BUILDINGS, SPECIAL)
REFERENCED STANDARDS . . . . . Chapter 35
Applicability 102.3, 102.4
Fire resistance 703.2
List . . . . . Chapter 35
Organizations . . . . . Chapter 35
REFORMATORIES 308.4
REFRIGERATION (see MECHANICAL) 101.4.2
Machinery room 1006.2.2.2
REFUGE AREAS (see HORIZONTAL EXIT, SMOKE COMPARTMENTS, STORM SHELTERS) 407.5.1, 408.6.2, 420.4.1, 422.3.2, 423.1.1, 423.3, 423.4, 1026.4
REFUSE CHUTE 713.13
REINFORCED CONCRETE (see CONCRETE)
General 1901.2
Inspections 1705.3
REINFORCEMENT
Concrete 1908.4
Masonry 2103.4
RELIGIOUS WORSHIP, PLACES OF
Accessibility 1103.2.8, 1108.2.4
Alarms and detection 907.2.1
Balcony 1029.5, 1108.2.4
Classification 303.1.4, 303.4, 305.1.1, 305.2.1, 308.6.2
Door operations 1010.1.9.3
Egress 1029
Interior finishes . . . . . Table 803.11, 804
Unlimited area 507.6, 507.7
RELOCATING, BUILDING 101.4.8, D103.3
REPAIRS, BUILDING 101.4.8, 202
Flood 1612.1, 1612.2
Minor 105.2.2
Permit required 105.1
RESIDENTIAL OCCUPANCY (GROUP R) 310
Accessibility 1103.2.3, 1103.2.11, 1105.1.7, 1106.2, 1107.2, 1107.3, 1107.4, 1107.6, E104.2
Alarm and detection 907.5.2.3.2, 907.5.2.3.3, 907.2.8, 907.2.9, 907.2.10, 907.2.11
Area 503, 505, 506, 508, 510
Draftstopping 718.3.2, 718.4.2
Group provisions
Group R-1 (transient) 310.3
Group R-2 (apartment) 310.4
Group R-3 (two dwellings per building) 310.5
Group R-4 (group homes) 310.6, 1010.1.9.5.1
Height 503, 504, 505, 508, 510
Incidental uses 509
Interior finishes . . . . . Table 803.11, 804
Live load . . . . . Table 1607.1
Live/work units 419
Means of egress
Aisles 1018.5
Corridors 1020.1, 1020.2
Doors 1010.1.1, 1010.1.9.5.1
Emergency escape and rescue 1030.1
Exit signs 1013.1, 1013.2
Single exits 1006.3.2,
Stairway, exit access 1019
Travel distance 1016.2.1, 1017.2, 1006.3.2
Mixed occupancies 508.3, 508.4
Accessory 508.2, G801.1
Live/work units 419
Parking, private 406.3
Parking below/above 510.4, 510.7, 510.9
Special mixed 510.2
Plumbing fixtures 2902
Risk category . . . . . Table 1604.5.1
Special provisions 510.2, 510.5, 510.6
Separation 419, 420, 508.2.4, 508.3.3
Swimming pools 3109.4
Sprinkler protection 903.2.8, 903.3.2
RETAINING WALLS 1807.2, 2304.12.5
Flood provisions G801.4
Seismic 1803.5.12
REVIEWING STANDS (see BLEACHERS AND GRANDSTANDS)
RISERS, STAIR (see STAIRWAY CONSTRUCTION)
Alternating tread device 1011.14

Assembly 1011.5.2, 1029.6, 1029.7, 1029.9, 1029.13
Closed 1011.5.5.3
General 1011.5
Spiral 1011.10
Uniformity 1011.5.4
RISK CATEGORY (Structural Design) . . . 202, 1604.5
Multiple occupancies 1604.5.1
RODENTPROOFING . . . . . Appendix F
ROLL ROOFING 1507.6
ROOF ACCESS 1011.12
ROOF ASSEMBLIES AND ROOFTOP STRUCTURES 202
Cooling towers 1510.4
Drainage 1503.4, 3201.4
Fire classification 1505
Fire district D102.2.9
Height modifications 504.3
Impact resistance 1504.7
Insulation 1508
Materials 1506
Mechanical equipment screen 1510.6
Parapet walls 1503.3, 1503.6
Penthouses 1510.2
Photovoltaic panels and modules . . . 1510.7, 1512.1
Radiant barrier 202, 1509
Roof ventilation 202
Tanks 1510.3
Towers, spires, domes and cupolas 1510.5
Weather protection 1503
Wind resistance 1504.1, 1609.5
ROOF CONSTRUCTION
Construction walkways 3306.7
Coverings (see ROOF COVERINGS) 1609.5.2
Deck 1609.5.1
Draftstopping 718.4
Fire resistance . . . . . Table 601
Fireblocking 718.2
Live loads . . . . . Table 1607.1, 1607.12
Materials . . . . . Chapter 6
Penetration of fire-resistant assemblies 714
Protection from adjacent construction 3307.1
Rain loads 1611
Roof structures 504.3, 1509, D102.2.9
Signs, roof mounted H110
Slope, minimum . . . . . Chapter 15
Snow load 1608
Trusses 2211.3, 2303.4, 2308.7.13
Wood (see ROOF CONSTRUCTION, WOOD)
ROOF CONSTRUCTION, WOOD . . . 602.4.3, 602.4.5
Anchorage to walls 1604.8.2
Attic access 1209.2
Ceiling joists 2308.7.1
Diaphragms 2305.1, 2306.2
Fastening requirements 2304.10
Fire-retardant-treated . . . . . Table 601, 603.1(1)
Framing 2304.11.3, 2308.7
Rafters 2306.1.1
Sheathing 2304.7, 2308.7.10
Trusses 2303.4, 2308.7.13
Ventilation, attic 1203.2
Wind uplift 2308.7.5
ROOF COVERINGS 1507
Asphalt shingles 1507.2
Built up 1507.10
Clay tile 1507.3
Concrete tile 1507.3
Fire district D102.2.4
Fire resistance . . . . . 603.1(3), 1505
Flashing 1503.2, 1503.6, 1507.2.9, 1507.3.9, 1507.5.7, 1507.7.7, 1507.8.8, 1507.9.9, 1510.6
Impact resistance 1504.7
Insulation 1508
Liquid-applied coating 1507.15
Membrane 3102
Metal roof panels 1507.4
Metal roof shingles 1507.5
Modified bitumen 1507.11
Photovoltaic shingles 1507.17
Plastics, light-transmitting panels 2609
Roof replacement 202, 1511.3
Reroofing 202, 1511
Roll 1507.6
Roof recover 202, 1511.3.1
Single-ply 202, 1507.12
Slate shingles 1507.7
Sprayed polyurethane foam 1507.14
Thermoplastic single-ply 1507.13
Wind loads 1504.1, 1609.5
Wood shakes 1507.9
Wood shingles 1507.8
ROOF DECK 202
ROOF DRAINAGE 1503.4
Scuppers 202, 1503.4.2
ROOF REPLACEMENT/RECOVERING 1511.3
ROOF STRUCTURE (see ROOF ASSEMBLIES AND ROOFTOP STRUCTURES)
ROOM DIMENSIONS 1208
ROOMING HOUSE (see BOARDING HOUSE) . . . 310

S

SAFEGUARDS
DURING CONSTRUCTION . . . . . Chapter 33
Accessibility 1103.2.5
Adjoining property protection 3307
Construction 3302
Demolition 3303
Excavations 1804.1
Fire extinguishers 3309
Means of egress 3310
Protection of pedestrians 3306
Sanitary facilities 3305
Site work 3304
Sprinkler protection 3312
Standpipes 3308.1.1, 3311
Temporary use of streets, alleys and public property 3308
SAFETY GLAZING 716.5.8.4, 2406
SCHOOLS (see EDUCATIONAL OCCUPANCY)
SEATING
Accessibility 1108.2, 1109.11
Tables 1029.9, 1029.12.1
SEATING, FIXED 1029
Accessibility 1108.2, 1109.11
Aisles 1029.9, 1029.12
Bleachers (see BLEACHERS)
Grandstands (see GRANDSTANDS)
Guards 1029.16
Live load . . . . . Table 1607.1
Occupant load 1004.4
Stability 1029.14
Temporary 108
SECURITY GLAZING 408.7
SECURITY GRILLES 402.8.8, 1010.1.4.4
SEISMIC 1613
Construction documents 107, 1603.1.5, 1603.1.9
Earthquake recording equipment . . . . . Appendix L
Fire resistance 704.12
Geotechnical investigation 1803.5.11, 1803.5.12
Glazing 2404
Loads 1613
Mapped acceleration parameters . . . . . 1613.3.1, Figures 1613.3.1(1) through1613.3.1(8)
Masonry 2106
Membrane structure 3102.7
Seismic design category 202, 1613.5.6
Seismic detailing 1604.10
Site class 202, 1613.5.2
Site coefficients 202, 1613.5.3
Special inspection 1705.12
Statement of special inspections 1704.3
Steel 2205.2, 2206.2
Structural observations 1704.6.1
Structural testing 1705.13
Wood 2305, 2308.6.6, 2308.6.8, 2308.6.10
SERVICE SINKS . . . . . 1109.3, Table 2902.1
SERVICE STATION
(see MOTOR FUEL-DISPENSING FACILITIES)
SHAFT (see SHAFT ENCLOSURE AND VERTICAL OPENING PROTECTION) 202
SHAFT ENCLOSURE
(see VERTICAL OPENING PROTECTION) 713
Continuity 713.5, 713.11, 713.12
Elevators 713.14
Exceptions 713.2, 1019, 1023,
Exterior walls 713.6
Fire-resistance rating 707.3.1, 713.4
Group I-3 . . . . . 408.5
High-rise buildings 403.2.1.2, 403.2.3, 403.3.1.1, 403.5.1
Joints 713.9, 715
Materials 713.3
Opening protection 713.8, 713.10, 714, 717.5.3
Penetrations 713.8
Refuse and laundry chutes 713.13
Required 713.1
SHEAR WALL
Gypsum board and plaster 2505
Masonry 202
Wood 202, 2305.1, 2306.3
SHEATHING
Clearance from earth 2304.12.1.2
Fastening 2304.10
Fiberboard . . . . . Table 2306.3(2)
Floor 2304.8, 2308.4.7
Gypsum . . . . . Table 2506.2, 2508
Moisture protection 2304.12.1.2
Roof 2304.8
Roof sheathing 2308.7.10
Wall 2304.6, 2308.5.11
Wood structural panels 2303.1.5, 2211.3
SHOPPING CENTERS
(see COVERED AND OPEN MALL BUILDINGS)
SHOTCRETE 1908
SHUTTERS, FIRE
(see OPENING PROTECTIVES) 716.5
SIDEWALKS . . . . . 105.2(6), G801.4
Live loads . . . . . Table 1607.1
SIGNS . . . . . 3107, Appendix H
Accessibility 1013.4, 1110, E106.4.9, E107, E109.2.2
Accessible means of egress . . . . . 1009.8.2, 1009.9 through 1009.11

Animated devices H108
Construction. H105, H107
Covered and open mall building 402.6.4
Doors 1010.1.9.3, 1010.1.9.7, 1010.1.9.8
Electrical H106
Elevators 1109.7, 1111.2, 3002.3, 3007.6.5, 3008.6.5
Encroachment, public right-of-way 3202.3.1
Exit. 1013, 2702.2.5
Floor loads 106.1
Ground. H109
Height limitation H109.1, H112.4
Illumination. H106.1
Luminous 403.5.5, 1013.5, 1025
Marquee. H113
Obstruction 1003.3.2, 1003.3.3, H103
Occupant load, assembly 1004.3
Parking spaces 1111.1
Plastic 2611, D102.2.10
Portable H114
Projecting. H112
Protruding objects 1003.3
Roof H110
Stairway identification 1023.8, 1023.9, 1111.2, 1111.3
Standpipe control valve 905.7.1
Toilet room. 1111.1, 1111.2, 2902.4, 2902.4.1
Variable message 1111.4
Walls 703.6, H111
SITE DRAWINGS 107.2.5
SITE WORK 3304
SKYLIGHTS 2405, 3106.3
Light, required 1205.2
Loads. 2404
Plastic 2610
Protection from adjacent construction 3307.1
Vertical opening protective 712.1.15
SLAB ON GROUND, CONCRETE. 1907, 2304.12.1.4
SLATE SHINGLES. 1507.7
SLEEPING UNITS 202
Accessibility 1103.2.11, 1105.1.6, 1106.2, 1106.7.2, 1107
Group I. 308
Group R 310
Scoping 101.2
Separation 420.2, 420.3
SMOKE ALARMS
Bathrooms 907.2.11.4
Cooking appliances 907.2.11.3
Live/work unit. 419.5, 907.2.11.2
Multiple-station. 907.2.11
Residential aircraft hangars 412.5.3, 412.5.4, 907.2.21
Residential occupancies 420.5, 907.2.11.1, 907.2.11.2
Single-station 907.2.11
SMOKE BARRIERS 202
Construction. 407.4.3, 709.4, 909.5
Doors 709.5, 716.5.3, 909.5.3
Fire-resistance rating 703, 709.3
Glazing, rated. 716.6
Inspection. 110.3.6
Joints 709.7, 715
Marking 703.6
Materials. 709.2
Opening protection. 709.5, 714.3, 714.4.4, 716, 717.5.5, 909.5.3
Penetrations. 709.6, 714
Smoke control 909.5
Special provisions
Ambulatory care facilities. 422.2, 422.3, 709.5.1
Group I-1 . . . . . .420.4, 709.5.1
Group I-2 . . . . . .407.5
Group I-3 . . . . . 408.6, 408.7
Underground 405.4.2, 405.4.3
SMOKE COMPARTMENT 407, 408, 422
Refuge area (see REFUGE AREA)
SMOKE CONTROL 909
Amusement buildings, special 411.1
Atrium buildings 404.5
Covered and open mall building. 402.7.2
Group I-3 . . . . . .408.9
High-rise (smoke removal). 403.4.7, 1023.11
Special inspections 1705.18
Stages 410.3.7.2
Standby power systems. 909.11, 909.20.6.2, 2702.2.15
Underground buildings. 405.5
SMOKE DAMPERS . . . . . 717.2 through 717.5
SMOKE DETECTION SYSTEM (see FIRE ALARM AND SMOKE DETECTION SYSTEMS). 907
SMOKE DETECTORS
Covered and open mall building. 402.8.6.1, 907.2.20
High-rise buildings 403.4.1, 907.2.13
HPM 415.11.9.3
Institutional I-2 . . . . . .407.8
Smoke-activated doors 716.5.9.3
Special amusement buildings 411.5
Underground buildings. 907.2.18,

SMOKE DEVELOPMENT . . . . . 802, 803.1.1, Table 803.11
SMOKE EXHAUST SYSTEMS
Underground buildings 405.5, 907.2.18, 909.2
SMOKE PARTITIONS 202, 710
Continuity 710.4
Doors 710.5
Ducts and air transfer openings 710.8
Fire-resistance rating 710.3
Inspection 110.3.6
Joints 710.7
Marking 703.6
Materials 710.2
Opening protection 710.5, 717.5.7
Penetrations 710.6
Special provisions
Atriums 404.6
Group I-2 . . . . . 407.3
SMOKE REMOVAL (High rise) 403.4.7
SMOKE VENTS 410.3.7.1, 910
SMOKEPROOF ENCLOSURES 403.5.4, 1023.11
Design 909.20
SNOW LOAD 1608
Glazing 2404
SOILS AND FOUNDATIONS (see FOUNDATION) . . . . . Chapter 18
Depth of footings 1809.4
Excavation, grading and fill . . . 1804, 3304, J106, J107
Expansive 1803.5.3, 1808.6
Flood hazard 1808.4
Footings and foundations 1808
Footings on or adjacent to slopes . . 1808.7, 3304.1.3
Foundation walls 1807.1.5, 3304.1.4
Geotechnical investigation 1803
Grading . . . . . 1804.4, Appendix J
Load-bearing values 1806
Soil boring and sampling 1803.4
Soil lateral load 1610
Special inspection 1705.6
SORORITIES 310.4
SOUND-INSULATING MATERIALS (see INSULATION) 720
SOUND TRANSMISSION 1207
SPECIAL CONSTRUCTION . . . . . Chapter 31
Automatic vehicular gates 3110
Awnings and canopies (see AWNINGS and CANOPIES) 3105
Marquees (see MARQUEES) 3106
Membrane structures (see MEMBRANE STRUCTURES) 3102
Pedestrian walkways and tunnels (see WALKWAYS and TUNNELED WALKWAYS) 3104
Photovoltaic panels and modules 3111
Signs (see SIGNS) 3107
Swimming pool enclosures and safety devices (see SWIMMING POOL) 3109
Telecommunication and broadcast towers (see TOWERS) 3108
Temporary structures (see TEMPORARY STRUCTURES) 3103
SPECIAL INSPECTIONS AND TESTS (see INSPECTIONS) . . . . . 110.3.9, Chapter 17
Alternative test procedure 1707
Approvals 1703
Continuous special inspection 202
Contractor responsibilities 1704.4
Design strengths of materials 1706
General 1701
In-situ load tests 1708
Periodic special inspection 202
Preconstruction load tests 1709
Special inspections 1705
Statement of special inspections 1704.3
Structural observations 1704.6
Testing seismic resistance 1705.13
SPECIAL INSPECTOR 202
Qualifications 1704.2.1
SPIRAL STAIRWAYS 1011.10
Construction 1011.2, 1011.3, 1011.10
Exceptions 1011.5.2, 1011.5.3, 1011.5.5.3, 1011.10
Group I-3 . . . . . 408.3.4
Live/work 419.3.2
Stages 410.6.3.4
SPORTS ACTIVITY, AREA OF (see RECREATIONAL FACILITIES) 202, 1110.4.1
SPRAYED FIRE-RESISTANT MATERIALS 202, 1702.1
Application 704.13
Inspection 1705.14, 1705.15
Steel column calculated fire resistance 722.5.2.2
SPRINKLER SYSTEM, AUTOMATIC 903, 3312
Exempt locations 903.3.1.1.1, 903.3.1.1.2
Fire department location 912
Limited area sprinkler systems 903.3.8
Signs 914.2
Substitute for fire rating . . . . . Table 601(4)
SPRINKLER SYSTEM, REQUIRED 903
Aircraft related 412.4.6, 412.6.5
Ambulatory care facilities 422.4, 903.2.2
Amusement buildings, special 411.4
Assembly 903.2.1, 1029.6.2.3
Atrium 404.3

Basements 903.2.11.1
Building area 506.2
Children's play structures 424.3
Combustible storage 413
Commercial kitchen 903.2.11.5
Construction 903.2.12
Covered and open mall building 402.5
Drying rooms 417.4
Education 903.2.3
Exempt locations 903.3.1.1.1, 903.3.1.1.2
Factory 903.2.4
Fire areas 707.3.10
Hazardous materials . . . . . Table 414.2.5(1), Table 414.2.5(2), 903.2.11.4
Hazardous occupancies 415.4, 415.11.6.4, 415.11.11, 705.8.1, 903.2.5
Height increase . . . . . Table 504.3
High-rise buildings 403.3, 903.2.11.3
Incidental uses . . . . . Table 509
Institutional 407.6, 408.11, 420.5, 903.2.6, 903.3.2
Laundry chutes, refuse chutes, termination rooms and incinerator rooms 713.13, 903.2.11.2
Live/work units 419.5, 903.2.8
Mercantile 903.2.7
Mezzanines 505.2.1, 505.2.3, 505.3.2
Multistory buildings 903.2.11.3
Parking garages 406.6.3, 903.2.9.1, 903.2.10.1
Residential 420.5, 903.2.8, 903.3.2
Special amusement buildings 411.4
Spray finishing booth 416.5
Stages 410.7
Storage 903.2.9, 903.2.10
Supervision (see SPRINKLER SYSTEM, SUPERVISION) 903.4
Underground buildings 405.3, 903.2.11.1
Unlimited area 507

SPRINKLER SYSTEM, SUPERVISION 903.4
Service 901.6
Underground buildings 405.3

STAGES AND PLATFORMS 303, 410
Dressing rooms 410.5
Fire barrier wall 410.5.1, 410.5.2
Floor finish and floor covering 410.3, 410.4, 804.4, 805.1
Horizontal assembly 410.5.1, 410.5.2
Means of egress 410.6
Platform, temporary 410.4.1
Platform construction . . . . . 410.4, 603.1(12)
Proscenium curtain 410.3.5
Proscenium wall 410.3.4
Roof vents 410.3.7.1
Scenery 410.3.6
Smoke control 410.3.7.2
Sprinkler protection 410.7
Stage construction . . . . . 410.3, 603.1(12)
Standpipes 410.8, 905.3.4
Technical production areas 202, 410.3.2, 410.6.3
Ventilation 410.3.7

STAIRWAY (see ALTERNATING TREAD DEVICES, SPIRAL STAIRWAYS, STAIRWAY CONSTRUCTION and STAIRWAY ENCLOSURE)

STAIRWAY CONSTRUCTION
Alternating tread 1011.14
Circular (see Curved)
Construction 1011.7
Curved 1011.4, 1011.9
Discharge barrier 1023.8
During construction 3310.1
Elevators 1011.12.1, 1023.4, 1023.10, 3002.7
Enclosure under 1011.7.3, 1011.7.4
Exit access 1019
Exterior exit 1027, 1028.1
Fireblocking 718.2.4
Guards 1015.2, 1015.3, 1607.7
Handrails 1011.11, 1014, 1607.7
Headroom 1011.3
Interior exit 1022
Illumination 1008.2, 1205.4, 1205.5
Ladders 408.3.5, 410.6.3.4, 1011.15, 1011.16
Landings 1011.6, 1011.8
Live load . . . . . Table 1607.1, 1607.8
Luminous 403.5.5, 411.7.1, 1025
Roof access 1011.12
Seismic anchorage 2308.4.7
Spiral (see SPIRAL STAIRWAYS) 408.3.4, 410.6.3.4, 419.3.2, 1011.10
Stepped aisles 1029.13.2
Transitions 1029.9.7, 1029.9.8, 1029.10
Travel distance 1017.3.1
Treads and risers 1011.4, 1011.5
Width/capacity 1005.3.1, 1011.2
Winders 1011.4, 1011.5, 1011.10

STAIRWAY ENCLOSURE 713.1, 1019, 1023
Accessibility 1009.3
Construction 1019, 1023.2
Discharge 1023.3.1, 1028.1
Doors 716.5.9, 1010.1.9.11
Elevators within 1023.4, 3002.7

Exit access 1019
Exterior walls 705.2, 707.4, 708.5, 713.6, 1009.3.1.8, 1023.2, 1027.6
Fire-resistant construction 1019.3, 1023.2
Group I-2 . . . . . 1019.4
Group I-3 . . . . . 408.3.8, 1019.4
High-rise 403.5
Penetrations 1023.5
Pressurization 909.6, 909.20.5, 1023.11
Smokeproof 403.5.4, 405.7.2, 909.20, 1023.11
Space below, use 1011.7.3, 1011.7.4
Ventilation 1023.6

STANDARDS (see REFERENCED STANDARDS)

STANDBY POWER 2702.1, 2702.2, 2702.4
Atriums 404.7, 2702.2.15
Covered and open mall buildings 402.7.3, 2702.2.4
Elevators 1009.4, 2702.2.2, 3003.1, 3007.8, 3008.8
Hazardous occupancy 414.5.2, 415.11.10, 421.8, 2702.2.8, 2702.2.13,
High-rise 403.4.5, 2702.2.9
Horizontal sliding doors 1010.1.4.3, 2702.2.10
Membrane structures 2702.2.12, 3102.8.2
Platform lifts 1009.5, 2702.2.2
Smoke control 909.11, 2702.2.15
Smokeproof enclosure 909.20.6.2, 2702.2.15
Special inspection 1705.12.6
Underground buildings 405.8, 2702.2.16

STANDPIPE AND HOSE SYSTEMS (see STANDPIPES, REQUIRED) 905, 3106.4, 3308.1.1, 3311
Cabinet locks 905.7.2
Dry 905.8
Hose connection location . . . . . 905.1, 905.4 through 905.6, 912

STANDPIPES, REQUIRED
Assembly 905.3.1, 905.3.2, 905.3.4
Covered and open mall buildings 402.7.1, 905.3.3
During construction 905.10, 3311
Elevators, fire service access 3007.9
Helistops 905.3.6
Marinas 905.3.7
Parking garages 406.5.8
Roof gardens and landscaped roofs 905.3.8
Stages 410.8, 905.3.4
Underground buildings 405.9, 905.3.5

STATE LAW 102.2

STEEL . . . . . Chapter 22
Bolting 2204.2
Cable structures 2208
Calculated fire resistance 722.5
Cold-formed 202, 2210, 2211
Composite structural steel and concrete 2206
Conditions of restraint 703.2.3
Decks 2210.1.1
Identification and protection 2203
Joists 202, 2207
Open web joist 2207
Parapet walls 1503.3, 1503.6
Seismic provisions 2205.2, 2206.2, 2207.1.1, 2210.2
Special inspections 1705.3
Storage racks 2209
Structural steel 2205
Welding 2204.1

STONE VENEER 1405.7
Slab-type 1405.8

STOP WORK ORDERS 115

STORAGE OCCUPANCY (GROUP S) 311
Accessibility 1108.3
Area 406.5.4, 406.5.5, 406.6.1, 503, 505, 506, 507, 508
Equipment platforms 505.2
Group provisions
Hazard storage, low, Group S-2 . . . . . 311.3
Hazard storage, moderate, Group S-1 . . . . . 311.2
Hazardous material display and storage 414.2.5
Height 406.5.4, 406.6.1, 503, 504, 505, 508, 510
Incidental uses 509
Interior finishes . . . . . Table 803.11, 804
Live loads . . . . . Table 1607.1
Means of egress
Aisles 1018.5
Stairway, exit access 1019
Travel distance 1016.2.1, 1017.2, 1017.2.2, 1006.3.2
Mixed occupancies 508.3, 508.4
Accessory 508.2
Parking above/below 510.3, 510.4, 510.7, 510.8, 510.9
Special mixed 510.2
Plumbing fixtures 2902
Special provisions
Aircraft related occupancies 412
High-piled combustible 413
Parking garages 406
Sprinkler protection 903.2.10
Unlimited area 507.3, 507.4, 507.5

STORM SHELTER 423
Emergency operation facilities 423.3

Education 423.4
Refuge area (see REFUGE AREA)
STRENGTH
Design requirements 1604.2
Masonry 202
Nominal 202
Required 202
STRENGTH DESIGN 202, 1604.1
Factored load 202
Limit state 202
Load combinations 1605.2
Load factor 202
Masonry 2108
STRUCTURAL DESIGN . . . . . Chapter 16
Aluminum . . . . . Chapter 20
Concrete . . . . . Chapter 19
Foundations . . . . . Chapter 18
Masonry . . . . . Chapter 21
Steel . . . . . Chapter 22
Wood . . . . . Chapter 23
STRUCTURAL OBSERVATION 202, 1704.6
STUCCO 2512
SUSCEPTIBLE BAY
Definition 202
Ponding instability 1611.2
SWIMMING POOL 3109
Accessibility 1110.2, 1110.3, 1110.4.13
Flood provisions G801.5
Gates, access 3109.4.1.7
Glass 2406.4
Indoor 3109.4.2
Public 3109.3
Residential 3109.4

T

TECHNICAL PRODUCTION AREAS 410.3.2, 410.6.3
TELEPHONE EXCHANGES 304
TELESCOPIC SEATING
(see FOLDING AND TELESCOPIC SEATING)
TEMPORARY STRUCTURES 3103
Certificate of occupancy 108.3
Conformance 108.2, 3103.1.1
Construction documents 3103.2
Encroachment, public rights-of-way 3202.3
Flood provisions G901
Means of egress 3103.4
Permit 108.1, 3103.1.2
Power, temporary 108.3
Termination of approval 108.4
TENANT SEPARATION
Covered and open mall building 402.4.2.1, 708.1
TENTS (see TEMPORARY STRUCTURES)
TERMITES, PROTECTION FROM 2304.12
TERRA COTTA 1405.9
TESTING
Automatic fire-extinguishing systems 904.4
Automatic water mist systems 904.11.3
Building official required 104.11.1
Carbon dioxide systems 904.8
Clean agent system 904.10
Dry chemical systems 904.6
Emergency and standby power 2702.4
Fire-resistant materials 703.2
Fire alarm systems 907.7, 907.8
Fire pumps 913.5
Foam systems 904.7
Glazing 2406, 2408.2.1
Halon systems 904.9
Personnel and material hoists 3004.4
Roof tile 1711.2
Seismic 1705.13
Sound transmission 1207
Smoke control 909.3, 909.5.2, 909.10.2, 909.12.1, 909.13.3, 909.18, 909.20.6.3, 909.21.7 1705.18
Soils 1803
Sprinkler protection 903.5
Structural
(see SPECIAL INSPECTIONS AND TESTS)
Wet chemical systems 904.5
THEATERS
[see ASSEMBLY OCCUPANCY (GROUP A, PROJECTION ROOMS and STAGES AND PLATFORMS)] 303.2
THERMAL BARRIER, FOAM PLASTIC INSULATION 2603.4, 2603.5.2
THERMAL-INSULATING MATERIALS
(see INSULATION) 719
TILE 202
Ceramic (see CERAMIC TILE)
Fire resistance, clay or shale 721.1
TOILETS and TOILET ROOMS . . . . Chapter 29, 3305
Accessible 1109.2, 1109.3, 1607.8.2
Construction/finish materials 1210
Door locking 1010.1.9.5.1, 1109.2.1.7, 2902.3.5
Family or assisted-use 1109.2.1, 2902.1.2, 2902.2.1
Fixture count . . . . . Table 2902.1
Grab bar live loads 1607.8.2
Location 2902.3.1, 2902.3.2, 2902.3.3, 2903.3.6

Partitions 1210.3
Privacy 1210.3
Public facilities 2902.3
Signs 1111.1, 1111.2, 2902.4, 2902.4.1
Ventilation 1203.5.2.1
TORNADO SHELTER (see STORM SHELTER)
TOWERS
Airport traffic control 412.3
Cooling 1510.4
Location and access 3108.2
Radio 3108
Television 3108
TOXIC MATERIALS
[see HIGH-HAZARD OCCUPANCY (GROUP H)]
Classification 307.6, 414, 415
Gas detection system 415.11.7, 421.6, 908.3
TRAVEL DISTANCE
Area of refuge 1009.6.1
Assembly seating 1029.7
Atrium 404.9
Balcony, exterior 1017.2.1
Care suites (Group I-2) 407.4.2, 407.4.4
Common path of travel 1016.2.1
Drinking fountains 2902.5
Exit access 1017.2
Mall 402.8.5, 402.8.6
Measurement 1017.3
Refrigeration machinery/
refrigerated rooms 1006.2.2.2, 1006.2.2.3
Smoke compartments (Group I-2 and I-3) 407.5, 408.6., 408.9
Special amusement building 411.4
Stories with one exit 1006.3.2
Toilet facilities 2902.3.2, 2902.3.3
TREADS, STAIR
(see STAIRWAY CONSTRUCTION)
Concentrated live load . . . . . Table 1607.1
TREATED WOOD 202
Fire-retardant-treated wood 2303.2
Pressure-treated wood 2303.1.9
Stress adjustments 2306.1.3
TRUSSES
Cold-formed steel 2211.3
Fire resistance 704.5
Materials . . . . . Chapter 6
Metal-plate-connected wood 2303.4.6
Wood 2303.4
TSUNAMI-
GENERATED FLOOD HAZARD . . . . . Appendix M
TUNNELED WALKWAY 3104, 3202.1
TURNSTILES 1010.3

U

UNDERGROUND BUILDINGS 405
Alarms and detection 405.6
Compartmentation 405.4
Construction type 405.2
Elevators 405.4.3
Emergency power loads 405.8, 2702.2.16
Means of egress 405.7
Smoke barrier 405.4.2, 405.4.3
Smoke exhaust/control 405.5
Smokeproof enclosure 405.7.2, 1023.11
Sprinkler protection 405.3
Standby power 405.8, 2702.2.16
Standpipe system 405.9, 905.3.5
UNDERLAYMENT . . . . . 202, 1707.2.3, 1507.3.3, 1507.5.3, 1507.6.3, 1507.7.3, Table 1507.8, 1507.8.3, 1507.9.3, 1507.17.3
Application 1507.2.8, 1507.3.3, 1507.4.5, 1507.5.3.1, 1507.6.3.1, 1507.7.3.1, 1507.8.3.1, 1507.9.3.1, 1507.17.4
Ice barrier 1507.2.8.2, 1507.5.4, 1507.6.4, 1507.7.4, 1507.8.4, 1507.9.4, 1507.17.4.2
UNLIMITED AREA BUILDINGS 507
UNSAFE STRUCTURES AND EQUIPMENT
(see STRUCTURES, UNSAFE) 115
Appeals . . . . . 113, Appendix B
Restoration 115.5
Revocation of permit 105.6
Stop work orders 115
Utilities disconnection 112.3
UNSTABLE MATERIALS . . . . 307.3, Table 414.2.5(1), Table 414.5.1, Table 415.6.2, 415.7.1, 415.9
UNUSABLE SPACE 712.3.3
USE AND OCCUPANCY . . . . . Chapter 3
Accessory 508.2
Incidental uses . . . . . 509, Table 509
Mixed 508.3, 508.4
Special . . . . . Chapter 4
UTILITIES 112
Service connection 112.1
Service disconnection 112.3
Temporary connection 112.2
UTILITY AND MISCELLANEOUS OCCUPANCY
(GROUP U) 312
Accessibility 1103.2.4, 1104.3.1
Agricultural buildings . . . . . Appendix C
Area 503, 505, 506, 507, 508
Flood provisions G1001

Height 503, 504, 508
Incidental uses 509
Live loads . . . . . Table 1607.1
Means of egress
Exit signs 1013.1
Stairway, exit access 1019
Mixed occupancies 508.3, 508.4
Special provisions
Private garages and carports 406.3
Residential aircraft hangers 412.5
Sprinkler protection 903.2.11
Travel distance 1016.2.1, 1017.1, 1006.3.2

V

VALUATION OR VALUE (see FEES, PERMIT) 109.3
VEHICLE BARRIER SYSTEMS 202, 406.4.3, 1607.8.3
VEHICLE SHOW ROOMS 304
VEHICULAR FUELING 406.7
VEHICULAR GATES 3110
VEHICULAR REPAIR 406.8
VENEER
Cement plaster 1405.15
Fastening 1405.17
Fiber-cement siding 1405.16
Glazing 1405.12
Masonry, adhered 1405.10, 2101.2.1, 2103.2.4
Masonry, anchored 1405.6, 2101.2.1
Metal 1405.11
Plastic 2605
Slab-type 1405.8
Stone 1405.7
Terra cotta 1405.9
Vinyl 1405.14
Wood 1405.5
VENTILATION (see MECHANICAL) 101.4.2
Attic 1203.2, 1503.5
Aircraft paint hangars 412.6.6
Bathrooms 1203.4.2.1
Crawl space 1203.3
Exhaust, hazardous 1203.6
Exhaust, HPM 415.11.10.2
Exit enclosure 1023.6
Fabrication areas, HPM 415.11.1.6
Hazardous 414.3, 415.9.1.7, 415.11.1.6, 415.11.5.8, 415.11.6.4, 415.11.7, 415.11.9.3
High-rise stairways 1022.10
HPM service corridors 415.11.3.2
Live/work unit 419.8
Mechanical 1203.1
Natural 1203.5
Parking 406.5.2, 406.5.5, 406.5.10, 406.6.2
Projection rooms 409.3
Repair garages 406.8.2
Roof 1203.2
Smoke exhaust 910
Smoke removal, high-rise buildings 403.4.7
Smokeproof enclosures 909.20.3, 909.20.4, 909.20.6, 1023.11
Spray rooms and spaces 416.2.2, 416.3
Stages 410.3.5, 410.3.7
Under-floor ventilation 1203.4
VENTS, PENETRATION PROTECTION 714
VERMICULITE, FIRE RESISTANT 721
VERTICAL OPENING PROTECTION
Atriums 404.6
Duct penetrations 717.1
Elevators 713.14, 3007.6.1, 3008.6.1
Exceptions 1022.1
Group I-3 . . . . . 408.5
High-rise 403.2.1.2, 403.2.3, 403.5.1
Live/work units 419.4
Open parking garages 406.5.9
Permitted vertical openings 712
Shaft enclosure 713, 1019, 1023.2
VESTIBULES, EXIT DISCHARGE 1028.1
VINYL
Expanded 802, 803.7, 803.8
Rigid 1405.14
VIOLATIONS 114
VOICE ALARM (see ALARMS, VOICE)

W

WALKWAY 3104
During construction 3306
Encroachment, public right-of-way 3202.3.4
Fire resistance . . . . . Table 601
Live load . . . . . Table 1607.1
Materials per construction type . . . . . Chapter 6
Opening protection 716, 717
WALL, EXTERIOR 705
Bearing . . . . . Chapter 6
Coverings 1405
Exterior Insulation and Finish Systems (EIFS) . . 1408
Exterior structural members 704.10
Fire district D102.1, D102.2.6
Fire-resistance ratings . . . . . Table 602, 703, 705.5, 706.5.1, 707.4, 1403.4
Flashing, veneered walls 1405.4, 1405.10.1
Foam plastic insulation 2603.4.1.4, 2603.5

Glazing, rated 715.5
Joints 705.9, 714
Light-transmitting plastic panels 2607
Materials 705.4, 1406
Metal Composite Materials (MCM) 1407
Nonbearing . . . . . Chapter 6
Opening protection 705.8, 705.10, 716.5.6
Parapets 705.11
Projections 705.2
Structural stability 705.6
Vapor retarders 1405.3
Veneer (see VENEER)
Weather resistance 1403.2, 1405.2, 1407.6, 1408.4
Weather-resistant barriers 1405.2

WALL, FIRE (see FIRE WALLS)
WALL, FOUNDATION (see FOUNDATION)
WALL, INTERIOR
Finishes 803, 1210.2
Opening protection 716, 717
WALL, INTERIOR NONBEARING (see PARTITIONS)
WALL, MASONRY 202
Wood contact 2304.12.1.3, 2304.12.1.5
WALL, PARAPET 705.11, 1503.3, 1503.6, 2109.3.4.3
WALL, PARTY (see FIRE WALLS)
WALL, PENETRATIONS 714.3
WALL, RETAINING (see RETAINING WALL)
WALL, VENEERED (see VENEER) . . . . . Chapter 14
WALL, WOOD CONSTRUCTION
Bracing 2308.6
Cutting, notching, boring 2308.5.9
Exterior framing 2308.5
Fastening schedule . . . . . Table 2304.10.1
Framing 2304.3, 2308.5
Interior bearing partition 2308.5.1
Interior nonbearing partition 2308.5.1
Openings 2308.5.5
Shear walls 2305.1, 2306.3
Sheathing (see SHEATHING)
Studs 2308.5.1
Top plates 2308.5.3.2
WATER-REACTIVE MATERIALS . . . . Table 307.1(1), 307.4, 307.5. 415.8.4
WEATHER PROTECTION
Exterior walls 1405.2
Roofs 1503
WELDING 2204.1
Materials, verification of steel reinforcement 1705.3.2
Special inspections 1705.2, 1705.3.1, 1705.12.3
Splices of reinforcement in masonry 2107.4
WIND LOAD 1609
Alternate all-heights method 1609.6
Construction documents 107, 1603.1.4
Exposure category 1609.4
Glazing 1609.1.2, 2404
Hurricane-prone regions 202
Masonry, empirical design 2109.1.1
Nominal design wind speed 1609.3.1
Roofs 1504.1, 1609.5, 2308.7.5
Seismic detailing required 1604.10
Special inspection 1705.11
Statement of special inspections 1704.3
Structural observation 1704.6.2
Ultimate design wind speed 1609.3
Wind-borne debris region 202
Wind tunnel testing 1504.2.1.2, 1609.1.1
WINDERS, STAIR (see STAIRWAY CONSTRUCTION)
WINDOW
Accessibility 1109.13.1
Emergency egress 1030
Exterior, structural testing 1709.5
Fire (see OPENING PROTECTIVES) 716.5.10, 716.5.11
Glass (see GLAZING) 1405.13
Guards 1015.8
Required light 1205.2
Wells 1030.5
WIRES, PENETRATION PROTECTION 714
WOOD . . . . . Chapter 23
Allowable stress design 2306
Bracing, walls 2308.6
Calculated fire resistance 722.6
Ceiling framing 2308.7
Connectors and fasteners 2304.10
Contacting concrete, masonry or earth 2304.1.4, 2304.12.1.3, 2304.12.2.1, 2304.12.2.2, 2304.12.3
Decay, protection against 2304.12
Diaphragms 2305.1, 2305.2, 2306.2
Draftstopping 718.3, 718.4
End-jointed lumber 2303.1.1.2
Fiberboard . . . . . 2303.1.5, Table 2306.3(2)
Fire-retardant treated 2303.2
Fireblocking 718.2
Floor and roof framing (see FLOOR CONSTRUCTION, WOOD) 2304.4
Floor sheathing 2304.8
Foundation 1807.1.4, 2308.6.7.4
Grade, lumber 2303.1.1
Hardboard 2303.1.7

Heavy timber construction 602.4, 2304.11
Hurricane shutters 1609.1.2
I-joist 2303.1.2
Inspection, special 1705.5, 1705.11.1, 1705.12.2
Lateral force-resisting systems 2305
Light-frame construction, conventional 2308
Load and resistance factor design 2307
Moisture content 2303.1.9.2, 2303.2.6
Nails and staples 2303.6
Plywood, hardwood 2303.3
Preservative treated 1403.5, 1403.6, 2303.1.9
Roof framing
(see ROOF CONSTRUCTION, WOOD) . . . 2304.4
Roof sheathing 2304.8
Seismic provisions 2305, 2306, 2308.6.6, 2308.6.8, 2308.6.10
Shear walls 2305, 2306.3
Standards and quality, minimum 2303
Structural panels 202, 2303.1.5
Supporting concrete or masonry 2304.13
Termite, protection against 2304.12
Trusses 2303.4
Veneer . . . . . Chapter 14
Wall framing
(see WALL, WOOD CONSTRUCTION) 2304.3
Wall sheathing, exterior 2304.6
WOOD SHINGLES AND SHAKES . . . 1507.8, 1507.9
WOOD STRUCTURAL PANELS
(see WOOD) 202, 2303.1.5
Bracing 2308.6
Decorative 2303.3
Diaphragms 2305.2, 2306.2
Fastening 2304.10
Fire-retardant-treated 2303.2
Performance category 202
Quality 2303.1.5
Roof sheathing 2304.8, 2308.7.10
Seismic shear panels 2305.1, 2308.6.6.2
Shear walls 2306.3
Sheathing 2304.6.1
Standards 2306.1
Subfloors 804.4
Veneer 1405.5

Y

YARDS OR COURTS 1206
Exit discharge 1028.4
Group I-2 . . . . . 407.9
Group I-3 . . . . . 408.3.6, 408.6.2
Light, natural 1205
Motor fuel-dispensing facilities 406.7.2
Occupant load 1004.5
Parking garage, open 406.5.5
Unlimited area building 507.2, 507.2.1

INTERNATIONAL CODE COUNCIL®

People Helping People Build a Safer World®

Valuable Guides to Changes in the 2015 I-Codes®

NEW!

FULL COLOR! HUNDREDS OF PHOTOS AND ILLUSTRATIONS!

SIGNIFICANT CHANGES TO THE 2015 INTERNATIONAL CODES®

Practical resources that offer a comprehensive analysis of the critical changes made between the 2012 and 2015 editions of the codes. Authored by ICC code experts, these useful tools are "must-have" guides to the many important changes in the 2015 International Codes.

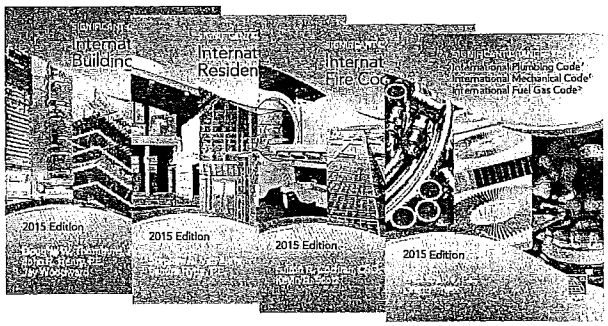

SIGNIFICANT CHANGES TO THE IBC, 2015 EDITION
#7024S15

SIGNIFICANT CHANGES TO THE IRC, 2015 EDITION
#7101S15

SIGNIFICANT CHANGES TO THE IFC, 2015 EDITION
#7404S15

SIGNIFICANT CHANGES TO THE IPC/IMC/IFGC, 2015 EDITION
#7202S15

Changes are identified then followed by in-depth discussion of how the change affects real world application. Photos, tables and illustrations further clarify application.

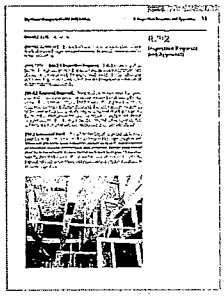

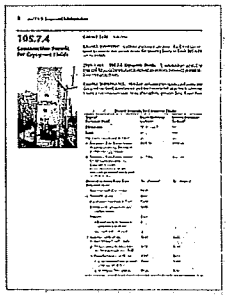

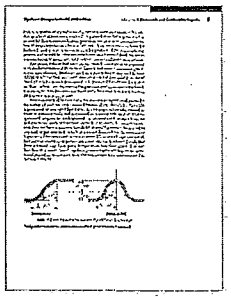

ORDER YOUR HELPFUL GUIDES TODAY!

1-800-786-4452 | www.iccsafe.org/books

HIRE ICC TO TEACH

Want your group to learn the Significant Changes to the I-Codes from an ICC expert instructor? Schedule a seminar today!
email: **ICCTraining@iccsafe.org** | phone: **1-888-422-7233 ext. 33818**

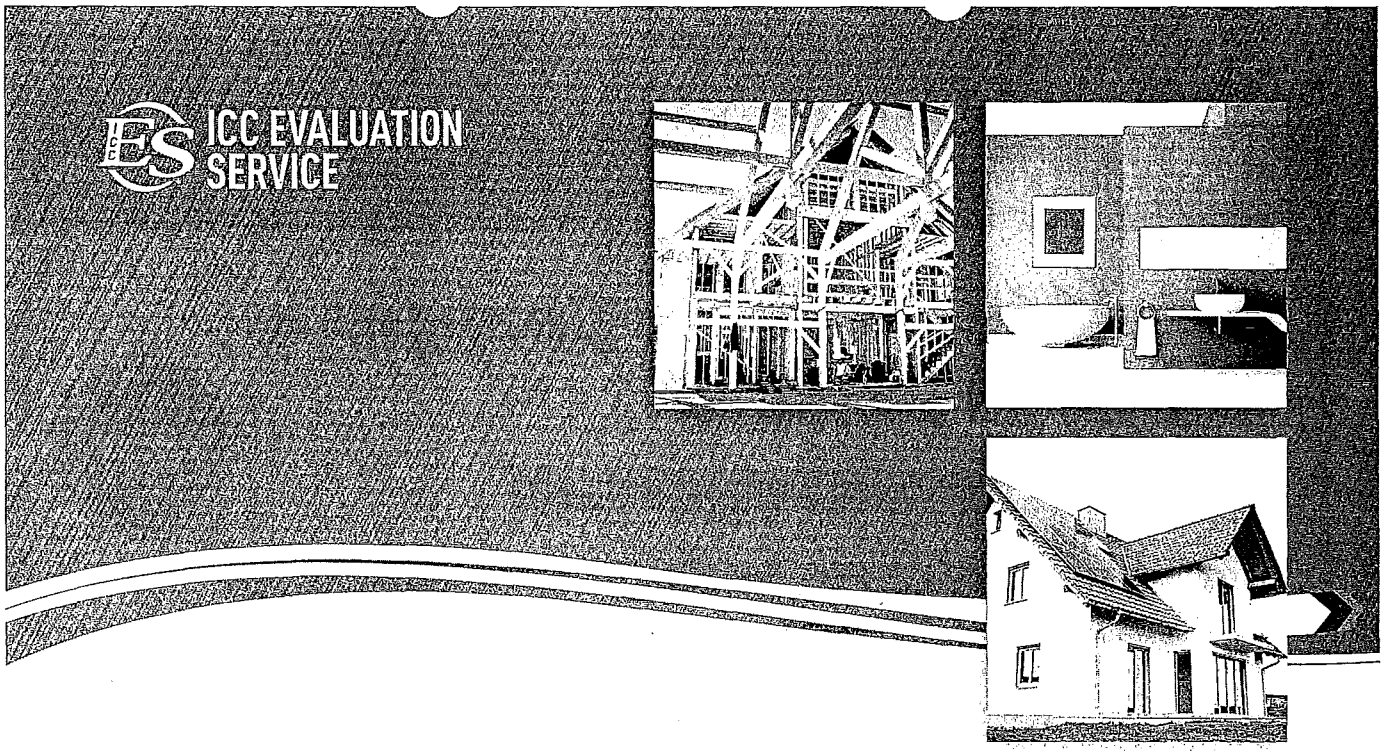

APPROVE WITH
CONFIDENCE

- ICC-ES® Evaluation Reports are the most widely accepted and trusted in the nation.
- ICC-ES is dedicated to providing evaluation reports, PMG and Building Product Listings to the highest quality and technical excellence.
- ICC-ES is a subsidiary of ICC®, the publisher of the IBC®, IRC®, IPC® and other I-Codes®.

We do thorough evaluations. You approve with confidence.

ICC ES ICC ES PMG ICC ES LISTED

Look for the ICC-ES marks of conformity before approving for installation

Code Officials — Contact Us With Your Questions About ICC-ES Reports at:
800-423-6587 ext. ES help (374357) or email EShelp@icc-es.org
www.icc-es.org

Subsidiary of ICC INTERNATIONAL CODE COUNCIL®

14-09329

INTERNATIONAL CODE COUNCIL®

People Helping People Build a Safer World®

The International Code Council's Training and Education Department

Industry professionals look to ICC to provide the critical knowledge and experiences necessary to excel in today's challenging world. ICC's educational programs cover a broad spectrum of code and construction related topics, offering some of the highest quality instruction direct from the source.

INSTITUTES

Acquire Skills, Share Experiences, Earn CEUs

ICC's training institutes offer a comprehensive education experience and a great way to earn much needed CEUs. Learn best practices from the leading experts in the field, build your network of professional contacts and share experiences. Institutes are held across the country throughout the year. To see the full schedule go to www.iccsafe.org/training.

HIRE ICC TO TEACH

Bring ICC On-Site and Earn CEUs

Give your group the confidence they need to meet tough challenges head-on so they can reach their full potential. ICC's course catalog contains a wide variety of educational topics that are available for contract at a location of your choice. Customized training is also available to fit your needs. For our full course catalogue go to www.iccsafe.org/hireicc.

ICC ONLINE CAMPUS

Earn CEUs at Your Own Pace

Online courses offer access to a comprehensive training and education portal, providing you with an effective and convenient tool to enhance your professional skills. Courses are available anytime for 99 days following registration. For a quick and easy way to earn CEUs towards your certification, try our Online Certifications Renewal section. Go to www.iccsafe.org/onlinecampus for our full offerings.

For more information about ICC's Training please contact us at
888-ICC-SAFE (422-7233) ext. 33818 *or email us at* **icctraining@iccsafe.org.**

14-09372

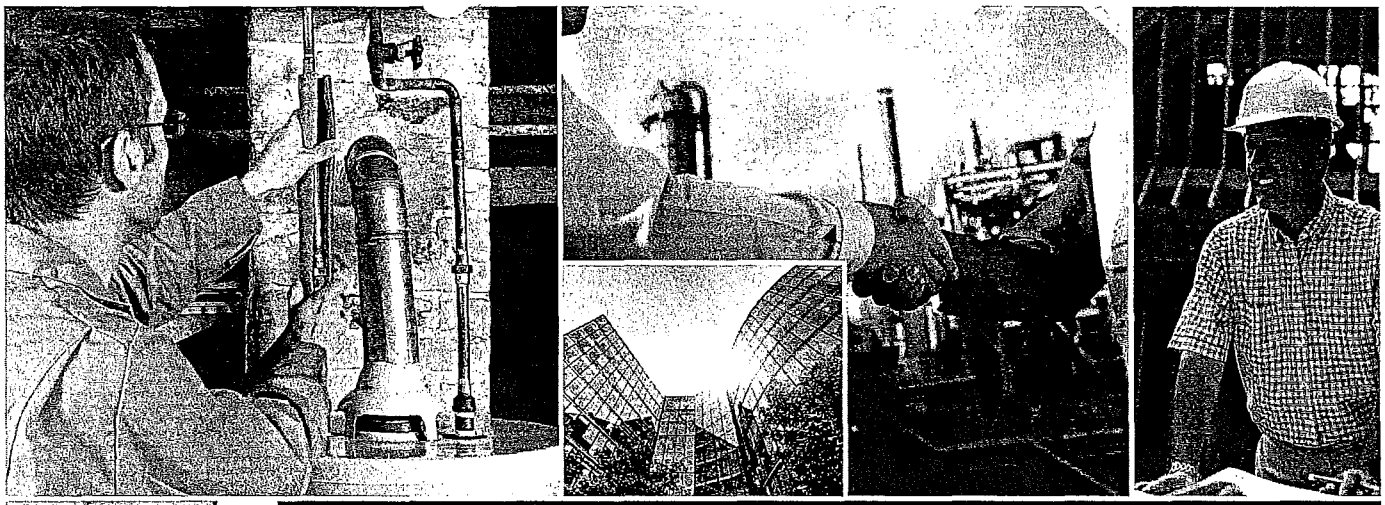

ICC INTERNATIONAL CODE COUNCIL®

People Helping People Build a Safer World®

Growing your career is what ICC Membership is all about

As your building career grows, so does the need to expand your code knowledge and job skills. Whether you're seeking a higher level of certification or professional quality training, Membership in ICC offers the best in I-Code resources and training for growing your building career today and for the future.

- **Learn** new job skills to prepare for a higher level of responsibility within your organization
- **Improve** your code knowledge to keep pace with the latest International Codes (I-Codes)
- **Achieve** additional ICC Certifications to open the door to better job opportunities

Plus, an affordable ICC Membership provides exclusive Member-only benefits including:

- Free code opinions from I-Code experts
- Free I-Code book(s) to new Members*
- Access to employment opportunities in the ICC Career Center
- Discounts on professional training & Certification renewal exams
- Savings of up to 25% off on code books & training materials
- Free benefits - Governmental Members: Your staff can receive free ICC benefits too*
- And much more!

Join the International Code Council (ICC) and start growing your building career now! Visit our Member page at www.iccsafe.org/membership for an application.

*Some restrictions apply. Speak with an ICC Member Services Representative for details.

14-09333

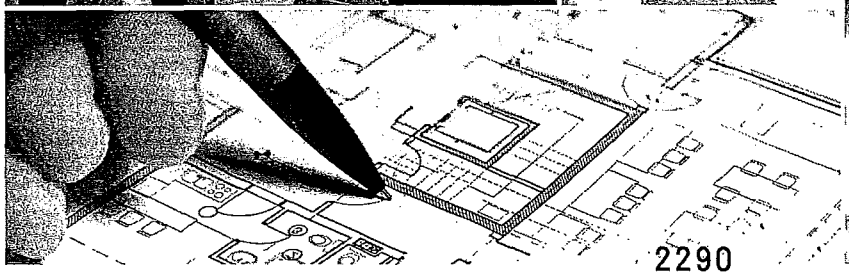

CALIFORNIA
ADOPTED THE FOLLOWING:

FINAL EXPRESS TERMS
FOR STATE AGENCY APPROVED CHANGES TO THE 2015 INTERNATIONAL RESIDENTIAL CODE (IRC)
FOR THE **2016 CALIFORNIA RESIDENTIAL CODE (CRC)** CALIFORNIA CODE OF REGULATIONS (CCR), TITLE 24, PART 2.5

- THE DEPARTMENT OF HOUSING AND COMMUNITY DEVELOPEMENT (HCD)
- THE OFFICE OF THE STATE FIRE MARSHAL (SFM)

Disclaimer: All Final Express Terms for the above mentioned agencies are available and were obtained from the Building Standards Commission at the following link:
http://www.bsc.ca.gov/Rulemaking/adoptcycle/2015CodeAdoptionCycle/ApprovedStandardsDecember2015.aspxhttp://www.bsc.ca.gov/Rulemaking/adoptcycle/2015CodeAdoptionCycle/ApprovedStandardsJanuary2016.aspx

TABLE OF CONTENTS

DIVISION	AGENCY PROPOSAL #
1. THE DEPARTMENT OF HOUSING AND COMMUNITY DEVELOPMENT	(HCD 02/15)
2. THE OFFICE OF THE STATE FIRE MARSHAL	(SFM 01/15)

Disclaimer: All Final Express Terms for the above mentioned agencies are available and were obtained from the Building Standards Commission at the following links:
http://www.bsc.ca.gov/Rulemaking/adoptcycle/2015CodeAdoptionCycle/ApprovedStandardsDecember2015.aspxhttp://www.bsc.ca.gov/Rulemaking/adoptcycle/2015CodeAdoptionCycle/ApprovedStandardsJanuary2016.aspx

FINAL EXPRESS TERMS
FOR
PROPOSED BUILDING STANDARDS
OF THE
DEPARTMENT OF HOUSING AND COMMUNITY DEVELOPMENT
REGARDING THE ADOPTION BY REFERENCE OF THE
2015 EDITION OF THE INTERNATIONAL RESIDENTIAL CODE
WITH PROPOSED AMENDMENTS INTO THE 2016 CALIFORNIA RESIDENTIAL CODE
CALIFORNIA CODE OF REGULATIONS, TITLE 24, PART 2.5

(HCD 02/15)

The Department of Housing and Community Development (HCD) proposes to adopt the 2015 edition of the International Residential Code (IRC) for codification and effectiveness into the 2016 edition of the California Residential Code (CRC) as presented on the following pages, including any necessary amendments. HCD further proposes to:

- Repeal the 2012 edition of the International Residential Code;
- Repeal the 2013 edition of the California Residential Code, which includes amendments to the model code that are no longer necessary;
- Repeal or amend building standards that are not addressed by a model code;
- Relocate or codify existing adopted and necessary amendments to the model code into the format of the model code proposed for adoption, the action of which has no regulatory effect; and/or
- Adopt new building standards that are not addressed by the model code proposed for adoption.

LEGEND FOR EXPRESS TERMS:

1. **IRC language with new California amendments:** IRC language shown in normal Arial 9-point; California amendments to IRC text shown *underlined and in italics* with vertical bar in left margin.

2. **Existing California amendments being modified:** All such language shown in *italics,* modified language is *underlined* or shown in ~~*strikeout*~~ with vertical bar in left margin.

3. **Existing California amendments with no modifications:** All such existing language shown in *italics,* modified model code language shown in ~~strikeout~~.

4. **Text not being modified:** All language not displayed in full is shown as "..." (i.e., ellipsis).

5. **Repealed text:** All language shown in ~~strikeout.~~

6. **Notation:** Authority and Reference citations are provided at the end of each action.

The Express Terms include amendments which correct references from the International Residential Code (IRC) to the *California Residential Code* (*CRC*). Similar amendments are also proposed to correct references to other International model codes to the appropriate California code and to correct reference to IRC sections not proposed for adoption by HCD.

SUMMARY OF REGULATORY ACTION

HCD PROPOSES TO:

- Adopt standards from the 2015 International Residential Code into the 2016 California Residential Code **without amendment**.
- Adopt standards from the 2015 International Residential Code into the 2016 California Residential Code **with amendment**.
- Bring forward existing California Amendments from the 2013 California Residential Code for adoption into the 2016 California Residential Code **with modifications**.
- Bring forward existing California Amendments from the 2013 California Residential Code for adoption into the 2016 California Residential Code **without modifications**, except for editorial corrections.
- Repeal 2013 California Amendments, which are **not** brought forward into the 2016 California Residential Code.

1. HCD proposes to bring forward existing California Amendments in Chapter 1, Division I, from the 2013 California Residential Code for adoption into the 2016 California Residential Code with modifications as follows:

CHAPTER 1
SCOPE AND ADMINISTRATION

DIVISION I
CALIFORNIA ADMINISTRATION

SECTION 1.1
GENERAL

1.1.1 Title. *These regulations shall be known as the California Residential Code, may be cited as such and will be referred to herein as "this code." The California Residential Code is Part 2.5 of twelve parts of the official compilation and publication of the adoption, amendment, and repeal of building regulations to the California Code of Regulations, Title 24, also referred to as the California Building Standards Code. This part incorporates by adoption the ~~2012~~ 2015 International Residential Code of the International Code Council with necessary California amendments.*

1.1.2 Purpose. *The purpose of this code is to establish the minimum requirements to safeguard the public health, safety and general welfare through structural strength, means of egress facilities, stability, access to persons with disabilities, sanitation, adequate lighting and ventilation and energy conservation; safety to life and property from fire and other hazards attributed to the built environment; and to provide safety to fire fighters and emergency responders during emergency operations.*

1.1.3 Scope. *The provisions of this code shall apply to the construction, alteration, movement, enlargement, replacement, repair, equipment, use and occupancy, location, maintenance, removal and demolition of every detached one-and two-family dwelling, efficiency dwelling unit, and townhouse not more than three stories above grade plane in height with a separate means of egress and structures accessory thereto throughout the State of California.*

Exceptions:

1. *Live/work units complying with the requirements of Section 419 of the California Building Code shall be permitted to be built as one- and two-family dwellings or townhouses.*
2. *Owner-occupied lodging houses with five or fewer guestrooms shall be permitted to be constructed in accordance with the California Residential Code for One- and Two-family Dwellings.*

1.1.3.1 Classification. *Structures or portions of structures shall be classified with respect to occupancy in one or more of the groups listed below. A room or space that is intended to be occupied at different times for different purposes shall comply with all of the requirements that are applicable to each of the purposes for which the room or space will be occupied. Structures with multiple occupancies or uses shall comply with Section 508 of the California Building Code. Where a structure is proposed for a purpose that is not specifically provided for in this code, such structure shall be classified in the group that the occupancy most nearly resembles, according to the fire safety and relative hazard involved in accordance with this code or the California Building Code.*

1.1.3.1.1 Residential Group R. *Residential Group R includes, among others, the use of a building or structure, or a portion thereof, for sleeping purposes when not classified as an Institutional Group I. Residential occupancies shall include the following:*

R-3 Residential occupancies where the occupants are primarily permanent in nature and not classified as Group R-1, R-2, R-2.1, R-3.1, R-4 or I, including:

Buildings that do not contain more than two dwelling units.

Townhouses not more than three stories above grade in height with a separate means of egress.

Adult facilities that provide accommodations for six or fewer persons of any age for less than 24-hours. Licensing categories that may use this classification include, but are not limited to:

Adult Day Programs.

Child care facilities that provide accommodations for six or fewer persons of any age for less than 24-hours. Licensing categories that may use this classification include, but are not limited to:

Day-care Center for Mildly Ill Children, Infant Care Center and School Age Child Day-care Center.

Family Day-care Homes that provide accommodations for 14 or fewer children, in the provider's own home for less than 24-hours.

Congregate living facilities or congregate residences with 16 or fewer persons.

R-3.1 This occupancy group may include facilities licensed by a governmental agency for a residentially based 24-hour care facility providing accommodations for six or fewer clients of any age. Clients may be classified as ambulatory, nonambulatory or bedridden. A Group R-3.1 occupancy shall meet the requirements for construction as defined for Group R-3, except as otherwise provided for in Section ~~R325~~ R335 Special Provisions For Licensed 24-HourCare Facilities in a Group R-3.1 Occupancy. This group may include:

Adult Residential Facilities Congregate Living

Health Facilities

Foster Family Homes

Group Homes

Intermediate Care Facilities for the developmentally disabled habilitative

Intermediate Care Facilities for the developmentally disabled nursing

Nurseries for the full-time care of children under the age of six, but not including "infants" as defined in Section 202

Residential Care Facilities for the Elderly

Small Family Homes and Residential Care Facilities for the chronically ill

***Exception:** Foster Family Homes or Group Homes licensed by the Department of Social Services which provide nonmedical board, room and care for six or fewer ambulatory children or children two years of age or younger, and which do not have any nonambulatory clients shall not be subject to regulations found in Section ~~R325~~ R335.*

Pursuant to Health and Safety Code Section 13143 with respect to these exempted facilities, no city, county or public district shall adopt or enforce any requirement for the prevention of fire or for the protection of life and property against fire and panic unless the requirement would be applicable to a structure regardless of the special occupancy. Nothing shall restrict the application of state or local housing standards to such facilities if the standards are applicable to residential occupancies and are not based on the use of the structure as a facility for ambulatory children. For the purpose of this exception, ambulatory children does not include relatives of the licensee or the licensee's spouse.

Large Family Day-Care Homes. See Section ~~R326~~ R336.

***1.1.3.1.2 Utility and Miscellaneous Group U.** Buildings and structures of an accessory character and miscellaneous structures not classified in any specific occupancy shall be constructed, equipped and maintained to conform to the requirements of this code commensurate with the fire and life hazard incidental to their occupancy. Group U shall include, but not be limited to, the following:*

Agricultural buildings
Aircraft hangars, accessory to a one- or two-family residence (see Section 412.5 of the California Building Code)
Barns
Carports
Fences more than ~~6~~ 7 feet (2134 mm) high
Grain silos, accessory to a residential occupancy
Greenhouses
Livestock shelters
Private garages
Retaining walls
Sheds
Stables
Tanks

Towers

1.1.3.2 Regulated buildings, structures and applications. *The model code, state amendments to the model code, and/or state amendments where there are no relevant model code provisions shall apply to detached one- and two-family dwellings, townhouses, efficiency dwelling units, and structures accessory thereto. State agencies with regulatory authority as specified in Sections 1.2 through 1.14, except where modified by local ordinance pursuant to Section 1.1.8. When adopted by a state agency, the provisions of this code shall be enforced by the appropriate enforcing agency, but only to the extent of authority granted to such agency by the state legislature.*

Note: *See Preface to distinguish the model code provisions from the California provisions.*

1. *One- and two-family dwellings, townhouses, employee housing, factory-built housing and other types of dwellings containing sleeping accommodations with common toilets or cooking facilities. See Section 1.8.2.1.1.*
2. *Permanent buildings and permanent accessory buildings or structures constructed within mobile-home parks and special occupancy parks regulated by the Department of Housing and Community Development. See Section 1.8.2.1.3.*

1.1.4 Appendices. *Provisions contained in the appendices of this code shall not apply unless specifically adopted by a state agency or adopted by a local enforcing agency in compliance with Health and Safety Code Section 18901 et seq. for Building Standards Law, Health and Safety Code Section 17950 for State Housing Law and Health and Safety Code Section 13869.7 for Fire Protection Districts. See Section 1.1.8 of this code.*

1.1.5 Referenced codes. *The codes, standards and publications adopted and set forth in this code, including other codes, standards and publications referred to therein are, by title and date of publication, hereby adopted as standard reference documents of this code. When this code does not specifically cover any subject related to building design and construction, recognized architectural or engineering practices shall be employed. The National Fire Codes, standards and the Fire Protection Handbook of the National Fire Protection Association are permitted to be used as authoritative guides in determining recognized fire prevention engineering practices.*

1.1.6 Nonbuilding standards, orders and regulations. *Requirements contained in the International Residential Code, or in any other referenced standard, code or document, which are not building standards as defined in Health and Safety Code Section 18909, shall not be construed as part of the provisions of this code. For nonbuilding standards, orders and regulations see other titles of the California Code of Regulations.*

1.1.7 Order of precedence and use.

1.1.7.1 Differences. *In the event of any differences between these building standards and the standard reference documents, the text of these building standards shall govern.*

1.1.7.2 Specific provisions. *Where a specific provision varies from a general provision, the specific provision shall apply.*

1.1.7.3 Conflicts. *When the requirements of this code conflict with the requirements of any other part of the California Building Standards Code, Title 24, the most restrictive requirements shall prevail.*

> ***1.1.7.3.1 Detached one- and two-family dwellings.*** *Detached one-and two-family dwellings, efficiency dwelling units and townhouses not more than three stories above grade plane in height with a separate means of egress and their accessory structures ~~shall not be required to comply with the more restrictive requirements contained in Title 24, Part 2,~~ may be designed and constructed in accordance with this code or the California Building Code, but not both, unless the proposed structure(s) or element(s) exceed the design limitations established in ~~the California Residential Code~~ this code and the code user is specifically directed by this code to use the California Building Code.*

1.1.8 City, county, or city and county amendments, additions or deletions. *The provisions of this code do not limit the authority of city, county, or city and county governments to establish more restrictive and reasonably necessary differences to the provisions contained in this code pursuant to complying with Section 1.1.8.1. The effective date of amendments, additions or deletions to this code by a city, county, or city and county filed pursuant to Section 1.1.8.1 shall be the date filed. However, in no case shall the amendments, additions or deletions to this code be effective any sooner than the effective date of this code.*

Local modifications shall comply with Health and Safety Code Section 18941.5 for Building Standards Law, Health and Safety Code Section 17958 for State Housing Law or Health and Safety Code Section 13869.7 for Fire Protection Districts.

1.1.8.1 Findings and filings.

1. *The city, county, or city and county shall make express findings for each amendment, addition or deletion based upon climatic, topographical or geological conditions.*

   Exception: *Hazardous building ordinances and programs mitigating unreinforced masonry buildings.*

2. *The city, county, or city and county shall file the amendments, additions or deletions expressly marked and identified as to the applicable findings. Cities, counties, cities and counties, and fire departments shall file the amendments, additions or deletions, and the findings with the California Building Standards Commission at 2525 Natomas Park Drive, Suite 130, Sacramento, CA 95833.*

3. *Findings prepared by fire protection districts shall be ratified by the local city, county, or city and county and filed with the California Department of Housing and Community Development, Division of Codes and Standards, P.O. Box 1407, Sacramento, CA 95812-1407 or ~~1800 3rd Street, Room 260, Sacramento, CA 95811~~ 2020 W. El Camino Avenue, Suite 250, Sacramento, CA 95833-1829.*

1.1.9 Effective date of this code. *Only those standards approved by the California Building Standards Commission that are effective at the time an application for building permit is submitted shall apply to the plans and specifications for, and to the construction performed under, that permit. For the effective dates of the provisions contained in this code, see the History Note page of this code.*

1.1.10 Availability of codes. *At least one complete copy each of Titles 8, 19, 20, 24 and 25 with all revisions shall be maintained in the office of the building official responsible for the administration and enforcement of this code. Each state department concerned and each city, county, or city and county shall have an up-to-date copy of the code available for public inspection. See Health and Safety Code Section 18942~~(d)~~ (e) (1) and (2).*

1.1.11 Format. *This part fundamentally adopts the International Residential Code by reference on a chapter-by-chapter basis. When a specific chapter of the International Residential Code is not printed in the code and is marked "Reserved", such chapter of the International Residential Code is not adopted as a portion of this code. When a specific chapter of the International Residential Code is marked "Not Adopted by the State of California" but appears in the code, it may be available for adoption by local ordinance.*

Note: *Matrix Adoption Tables at the front of each chapter may aid the code user in determining which chapter or sections within a chapter are applicable to buildings under the authority of a specific state agency, but they are not considered regulatory.*

1.1.12 Validity. *If any chapter, section, subsection, sentence, clause or phrase of this code is for any reason held to be unconstitutional, contrary to statute, exceeding the authority of the state as stipulated by statutes or otherwise inoperative, such decision shall not affect the validity of the remaining portion of this code.*

SECTION 1.8
DEPARTMENT OF HOUSING AND COMMUNITY DEVELOPMENT (HCD)

1.8.1 Purpose. *The purpose of this code is to establish the minimum requirements necessary to protect the health, safety and general welfare of the occupants and the public by governing accessibility, erection, construction, reconstruction, enlargement, conversion, alteration, repair, moving, removal, demolition, occupancy, use, height, court, area, sanitation, ventilation, maintenance and safety to life and property from fire and other hazards attributed to the built environment.*

SECTION 1.8.2
AUTHORITY AND ABBREVIATIONS

1.8.2.1 General. *The Department of Housing and Community Development is authorized by law to promulgate and adopt building standards and regulations for several types of building applications. The applications under the authority of the Department of Housing and Community Development are listed in Sections 1.8.2.1.1 through 1.8.2.1.3.*

1.8.2.1.1 Housing construction.

Application *–Hotels, motels, lodging houses, ~~apartment houses~~ apartments, dwellings, dormitories, condominiums, shelters for homeless persons, congregate residences, employee housing, factory-built housing and other types of dwellings containing sleeping accommodations with or without common toilet or cooking facilities including accessory buildings, facilities and uses thereto. Sections of this code which pertain to applications listed in this section are identified using the abbreviation "HCD 1."*

Enforcing Agency*–Local building department or the Department of Housing and Community Development.*

Authority Cited*–Health and Safety Code Sections 17040, 17050, 17920.9, 17921, 17921.3, 17921.6, 17921.10, 17922, 17922.6, 17922.12, 17927, 17928, 17959.6, 18300, 18552, 18554, 18620, 18630, 18640, 18670, 18690, 18691, 18865, 18871.3, 18871.4, 18873, 18873.1, 18873.2, 18873.3, 18873.4, 18873.5, 18938.3, 18944.11 and 19990; and Government Code Section 12955.1.*

Reference*–Health and Safety Code Sections 17000 through 17062.5, 17910 through 17995.5, 18200 through 18700, 18860 through 18874, and 19960 through 19997; and Government Code Sections 12955.1 and 12955.1.1.*

1.8.2.1.2 Housing accessibility.

Application *– ~~"COVERED MULTIFAMILY DWELLINGS"~~ Covered multifamily dwellings as defined in Chapter ~~11A~~ 2 of the California Building Code ~~(CBC)~~ including, but not limited to, lodging houses, dormitories, timeshares, condominiums, shelters for homeless persons, congregate residences, ~~apartment houses~~ apartments, dwellings, employee housing, factory-built housing and other types of dwellings containing sleeping accommodations with or without common toilet or cooking facilities.*

Disabled access regulations promulgated under HCD authority are located in Chapter 11A of the California Building Code ~~(CBC)~~ and are identified by the abbreviation "HCD 1-AC." The application of such provisions shall be in conjunction with other requirements of the Building Standards Code and apply only to newly constructed ~~"COVERED MULTIFAMILY DWELLINGS"~~ covered multifamily dwellings as defined in ~~CBC~~ Chapter ~~11A~~ 2 of the California Building Code. "HCD 1-AC" applications include, but are not limited to, the following:

1. *All newly constructed ~~"COVERED MULTIFAMILY DWELLINGS"~~ covered multifamily dwellings as defined in ~~CBC~~ Chapter ~~11A~~ 2 of the California Building Code.*
2. *New ~~"COMMON USE AREAS"~~ common use areas as defined in ~~CBC~~ Chapter ~~11A~~ 2 of the California Building Code serving existing covered multifamily dwellings.*
3. *Additions to existing buildings, where the addition alone meets the definition of ~~"COVERED MULTIFAMILY DWELLINGS"~~ covered multifamily dwellings as defined in ~~CBC~~ Chapter ~~11A~~ 2 of the California Building Code.*
4. *Common use areas serving covered multifamily dwellings.*
5. *Where any portion of a building's exterior is preserved, but the interior of the building is removed, including all structural portions of floors and ceilings, the building is considered a new building for the purpose of determining the application of ~~CBC~~ California Building Code, Chapter 11A.*

"HCD 1-AC" building standards generally do not apply to public use areas or public accommodations such as hotels and motels or public housing. Public use areas, public accommodations, and public housing ~~and housing which is publicly funded~~ as defined in Chapter 2 of the ~~CBC~~ California Building Code are subject to the Division of the State Architect (DSA-AC) in Chapter 11B and are referenced in ~~CBC~~ California Building Code Section 1.9.1.

Enforcing Agency*–Local building department or the Department of Housing and Community Development.*

Authority cited*–Health and Safety Code Sections 17040, 17050, 17920.9, 17921, 17921.3, 17921.6, 17921.10, 17922, 17922.6, 17922.12, 17927, 17928, 17959.6, 18300, 18552, 18554, 18620, 18630, 18640, 18670, 18690, 18691, 18865, 18871.3, 18871.4, 18873, 18873.1, 18873.2, 18873.3, 18873.4, 18873.5, 18938.3, 18944.11 and 19990; and Government Code Section 12955.1.*

***Reference**–Health and Safety Code Sections 17000 through 17062.5, 17910 through 17995.5, 18200 through 18700, 18860 through 18874, and 19960 through 19997; and Government Code Sections 12955.1 and 12955.1.1.*

1.8.2.1.3 Permanent buildings in mobilehome parks and special occupancy parks.

***Application**–Permanent buildings, and permanent accessory buildings or structures, constructed within mobilehome parks and special occupancy parks that are under the control and ownership of the park operator. Sections of this code which pertain to applications listed in this section are identified using the abbreviation "HCD 2."*

***Enforcing agency**–The Department of Housing and Community Development, local building department or other local agency that has assumed responsibility for the enforcement of Health and Safety Code, Division 13, Part 2.1, commencing with Section 18200 for mobilehome parks and Health and Safety Code, Division 13, Part 2.3, commencing with Section 18860 for special occupancy parks.*

***Authority cited**–Health and Safety Code Sections 17040, 17050, 17920.9, 17921, 17921.3, 17921.6, 17921.10, 17922, 17922.6, 17922.12, 17927, 17928, 17959.6, 18300, 18552, 18554, 18620, 18630, 18640, 18670, 18690, 18691, 18865, 18871.3, 18871.4, 18873, 18873.1, 18873.2, 18873.3, 18873.4, 18873.5, 18938.3, 18944.11 and 19990; and Government Code Section 12955.1.*

***Reference**–Health and Safety Code Sections 17000 through 17062.5, 17910 through 17995.5, 18200 through 18700, 18860 through 18874, and 19960 through 19997; and Government Code Sections 12955.1 and 12955.1.1.*

SECTION 1.8.3
LOCAL ENFORCING AGENCY

***1.8.3.1 Duties and powers.** The building department of every city, county, or city and county shall enforce all the provisions of law, this code, and the other rules and regulations promulgated by the Department of Housing and Community Development pertaining to the installation, erection, construction, reconstruction, movement, enlargement, conversion, alteration, repair, removal, demolition or arrangement of ~~apartment houses~~ apartments, condominiums, hotels, motels, lodging houses and dwellings, including accessory buildings, facilities and uses thereto.*

The provisions regulating the erection and construction of dwellings and appurtenant structures shall not apply to existing structures as to which construction is commenced or approved prior to the effective date of these regulations. Requirements relating to use, maintenance and occupancy shall apply to all dwellings and appurtenant structures approved for construction or constructed before or after the effective date of this code.

For additional information regarding the use and occupancy of existing buildings and appurtenant structures, see California Code of Regulations, Title 25, Division 1, Chapter 1, Subchapter 1, commencing with Article 1, Section 1.

***1.8.3.2 Laws, rules and regulations.** Other than the building standards contained in this code, and notwithstanding other provisions of law, the statutory authority and location of the laws, rules and regulations to be enforced by local enforcing agencies are listed by statute in Sections 1.8.3.2.1 through 1.8.3.2.5 below:*

***1.8.3.2.1 State Housing Law.** Refer to the State Housing Law, California Health and Safety Code, Division 13, Part 1.5, commencing with Section 17910 and California Code of Regulations, Title 25, Division 1, Chapter 1, Subchapter 1, commencing with Section 1, for the erection, construction, reconstruction, movement, enlargement, conversion, alteration, repair, removal, demolition or arrangement of ~~apartment houses~~ apartments, condominiums, hotels, motels, lodging houses and dwellings, including accessory buildings, facilities and uses thereto.*

***1.8.3.2.2 Mobilehome Parks Act.** Refer to the Mobilehome Parks Act, California Health and Safety Code, Division 13, Part 2.1, commencing with Section 18200 and California Code of Regulations, Title 25, Division 1, Chapter 2, commencing with Section 1000 for mobilehome park administrative and enforcement authority, permits, plans, fees, violations, inspections and penalties both within and outside mobilehome parks.*

***Exception:** Mobilehome parks where the Department of Housing and Community Development is the enforcing agency.*

***1.8.3.2.3 Special Occupancy Parks Act.** Refer to the Special Occupancy Parks Act, California Health and Safety Code, Division 13, Part 2.3, commencing with Section 18860 and California Code of Regulations, Title 25, Division 1,*

Chapter 2.2, commencing with Section 2000 for special occupancy park administrative and enforcement authority, permits, fees, violations, inspections and penalties both within and outside of special occupancy parks.

Exception: *Special occupancy parks where the Department of Housing and Community Development is the enforcing agency.*

1.8.3.2.4 Employee Housing Act. *Refer to the Employee Housing Act, California Health and Safety Code, Division 13, Part 1, commencing with Section 17000 and California Code of Regulations, Title 25, Division 1, Chapter 1, Subchapter 3, commencing with Section 600 for employee housing administrative and enforcement authority, permits, fees, violations, inspections and penalties.*

1.8.3.2.5 Factory-Built Housing Law. *Refer to the Factory-Built Housing Law, California Health and Safety Code, Division 13, Part 6, commencing with Section 19960 and California Code of Regulations, Title 25, Division 1, Chapter 3, Subchapter 1, commencing with Section 3000 for factory-built housing administrative and enforcement authority, permits, fees, violations, inspections and penalties.*

SECTION 1.8.4
PERMITS, FEES, APPLICATIONS AND INSPECTIONS

1.8.4.1 Permits. *A written construction permit shall be obtained from the enforcing agency prior to the erection, construction, reconstruction, installation, moving or alteration of any building or structure.*

Exceptions:

1. *Work exempt from permits as specified in Chapter 1, Scope and Application, Division II, Administration, Section R105.2.*
2. *Changes, alterations or repairs of a minor nature not affecting structural features, egress, sanitation, safety or accessibility as determined by the enforcing agency.*

Exemptions from permit requirements shall not be deemed to grant authorization for any work to be done in any manner in violation of other provisions of law or this code.

1.8.4.2 Fees. *Subject to other provisions of law, the governing body of any city, county, or city and county may prescribe fees to defray the cost of enforcement of rules and regulations promulgated by the Department of Housing and Community Development. The amount of the fees shall not exceed the amount reasonably necessary to administer or process permits, certificates, forms or other documents, or to defray the costs of enforcement. For additional information, see State Housing Law, Health and Safety Code, Division 13, Part 1.5, Section 17951 and California Code of Regulations, Title 25, Division 1, Chapter 1, Subchapter 1, Article 3, commencing with Section 6.*

1.8.4.3 Plan review and time limitations. *Subject to other provisions of law, provisions related to plan checking, prohibition of excessive delays and contracting with or employment of private parties to perform plan checking are set forth in State Housing Law, Health and Safety Code Section 17960.1, and for employee housing, in Health and Safety Code Section 17021.*

1.8.4.3.1 Retention of plans. *The building department of every city, county, or city and county shall maintain an official copy, microfilm, electronic or other type of photographic copy of the plans of every building, during the life of the building, for which the department issued a building permit.*

Exceptions:

1. *Single or multiple dwellings not more than two stories and basement in height.*
2. *Garages and other structures appurtenant to buildings listed in Exception 1.*
3. *Farm or ranch buildings appurtenant to buildings listed in Exception 1.*
4. *Any one-story building where the span between bearing walls does not exceed 25 feet (7620 mm), except a steel frame or concrete building.*

All plans for common interest developments as defined in Section ~~1351~~ 4100 of the California Civil Code shall be retained. For additional information regarding plan retention and reproduction of plans by an enforcing agency, see Health and Safety Code Sections 19850 through 19852.

1.8.4.4 Inspections. *Construction or work for which a permit is required shall be subject to inspection by the building official, and such construction or work shall remain accessible and exposed for inspection purposes until approved.*

Approval as a result of an inspection shall not be construed to be an approval of a violation of the provisions of this code or other regulations of the Department of Housing and Community Development. Required inspections are listed in Chapter 1, Scope and Application, Division II, Administration, Sections R109.1.1, R109.1.1.1, R109.1.3, R109.1.4, R109.1.4.1, R109.1.4.2, R109.1.5, R109.1.5.1, R109.1.5.2, R109.1.6, R109.1.6.1 and R109.1.6.2.

SECTION 1.8.5
RIGHT OF ENTRY FOR ENFORCEMENT

1.8.5.1 General. *Subject to other provisions of law, officers and agents of the enforcing agency may enter and inspect public and private properties to secure compliance with the rules and regulations promulgated by the Department of Housing and Community Development. For limitations and additional information regarding enforcement, see the following:*

1. *For applications subject to the State Housing Law as referenced in Section 1.8.3.2.1 of this code, refer to Health and Safety Code, Division 13, Part 1.5, commencing with Section 17910 and California Code of Regulations, Title 25, Division 1, Chapter 1, Subchapter 1, commencing with Section 1.*
2. *For applications subject to the Mobilehome Parks Act as referenced in Section 1.8.3.2.2 of this code, refer to Health and Safety Code, Division 13, Part 2.1, commencing with Section 18200 and California Code of Regulations, Title 25, Division 1, Chapter 2, commencing with Section 1000.*
3. *For applications subject to the Special Occupancy Parks Act as referenced in Section 1.8.3.2.3 of this Code, refer to Health and Safety Code, Division 13, Part 2.3, commencing with Section 18860 and California Code of Regulations, Title 25, Division 1, Chapter 2.2, commencing with Section 2000.*
4. *For applications subject to the Employee Housing Act as referenced in Section 1.8.3.2.4 of this code, refer to Health and Safety Code, Division 13, Part 1, Section 17000 and California Code of Regulations, Title 25, Division 1, Chapter 1, Subchapter 3, commencing with Section 600.*
5. *For applications subject to the Factory-Built Housing Law as referenced in Section 1.8.3.2.5 of this code, refer to Health and Safety Code, Division 13, Part 6, commencing with Sections 19960 and California Code of Regulations, Title 25, Division 1, Chapter 3, Subchapter 1, commencing with Section 3000.*

SECTION 1.8.6
LOCAL MODIFICATION BY ORDINANCE OR REGULATION

1.8.6.1 General. *Subject to other provisions of law, a city, county, or city and county may make changes to the provisions adopted by the Department of Housing and Community Development. If any city, county, or city and county does not amend, add or repeal by local ordinances or regulations the provisions published in this code or other regulations promulgated by the Department of Housing and Community Development, those provisions shall be applicable and shall become effective 180 days after publication by the California Building Standards Commission. Amendments, additions and deletions to this code adopted by a city, county, or city and county pursuant to California Health and Safety Code Sections 17958.5, 17958.7 and 18941.5, together with all applicable portions of this code, shall also become effective 180 days after publication of the California Building Standards Code by the California Building Standards Commission.*

1.8.6.2 Findings, filings and rejections of local modifications. *Prior to making any modifications or establishing more restrictive building standards, the governing body shall make express findings and filings, as required by California Health and Safety Code Section 17958.7, showing that such modifications are reasonably necessary due to local climatic, geological or topographical conditions. No modification shall become effective or operative unless the following requirements are met:*

1. *The express findings shall be made available as a public record.*
2. *A copy of the modification and express finding, each document marked to cross-reference the other, shall be filed with the California Building Standards Commission for a city, county, or city and county and with the Department of Housing and Community Development for fire protection districts.*
3. *The California Building Standards Commission has not rejected the modification or change.*

Nothing in this section shall limit the authority of fire protection districts pursuant to California Health and Safety Code Section 13869.7(a).

SECTION 1.8.7
ALTERNATE MATERIALS, DESIGNS, TESTS AND METHODS OF CONSTRUCTION

1.8.7.1 General. *The provisions of this code as adopted by the Department of Housing and Community Development, are not intended to prevent the use of any alternate material, appliance, installation, device, arrangement, design or method of construction not specifically prescribed by this code. Consideration and approval of alternates shall comply with Section 1.8.7.2 for local building departments and Section 1.8.7.3 for the Department of Housing and Community Development.*

1.8.7.2 Local building departments. *The building department of any city, county, or city and county may approve alternates for use in the erection, construction, reconstruction, movement, enlargement, conversion, alteration, repair, removal, demolition or arrangement of ~~an apartment house~~ apartments, condominiums, hotels, motels, lodging houses, dwellings, or ~~an~~ accessory structures, except for the following:*

1. *Structures located in mobilehome parks as defined in California Health and Safety Code Section 18214.*
2. *Structures located in special occupancy parks as defined in California Health and Safety Code Section 18862.43.*
3. *Factory-built housing as defined in California Health and Safety Code Section 19971.*

1.8.7.2.1 Approval of alternates. *The consideration and approval of alternates by a local building department shall comply with the following procedures and limitations:*

1. *The approval shall be granted on a case-by-case basis.*
2. *Evidence shall be submitted to substantiate claims that the proposed alternate, in performance, safety and protection of life and health, conforms to, or is at least equivalent to, the standards contained in this code and other rules and regulations promulgated by the Department of Housing and Community Development.*
3. *The local building department may require tests performed by an approved testing agency at the expense of the owner or owner's agent as proof of compliance.*
4. *If the proposed alternate is related to accessibility in covered multifamily dwellings or in facilities serving ~~"COVERED MULTIFAMILY DWELLINGS"~~ covered multifamily dwellings as defined in CBC Chapter ~~11A~~ 2, the proposed alternate must also meet the threshold set for ~~"EQUIVALENT FACILITATION"~~ equivalent facilitation as defined in ~~CBC~~ Chapter ~~11A~~ 2 of the California Building Code.*

For additional information regarding approval of alternates by a building department pursuant to the State Housing Law, see California Health and Safety Code Section 17951(e) and California Code of Regulations, Title 25, Division 1, Chapter 1, Subchapter 1.

1.8.7.3 Department of Housing and Community Development. *The Department of Housing and Community Development may approve alternates for use in the erection, construction, reconstruction, movement, enlargement, conversion, alteration, repair, removal or demolition of ~~an apartment house~~ apartments, condominiums, hotels, motels, lodging houses, dwellings or an accessory thereto and permanent buildings in mobilehome parks and special occupancy parks. The consideration and approval of alternates shall comply with the following:*

1. *The department may require tests at the expense of the owner or owner's agent to substantiate compliance with the California Building Standards Code.*
2. *The approved alternate shall, for its intended purpose, be at least equivalent in performance and safety to the materials, designs, tests or methods of construction prescribed by this code.*

SECTION 1.8.8
APPEALS BOARD

1.8.8.1 General. *Every city, county, or city and county shall establish a process to hear and decide appeals of orders, decisions and determinations made by the enforcing agency relative to the application and interpretation of this code and other regulations governing construction, use, maintenance and change of occupancy. The governing body of any city, county, or city and county may establish a local appeals board and a housing appeals board to serve this purpose. Members of the appeals board(s) shall not be employees of the enforcing agency and shall be knowledgeable in the applicable building codes, regulations and ordinances as determined by the governing body of the city, county, or city and county.*

Where no such appeals boards or agencies have been established, the governing body of the city, county, or city and county shall serve as the local appeals board or housing appeals board as specified in California Health and Safety Code Sections 17920.5 and 17920.6.

1.8.8.2 Definitions. *The following terms shall for the purposes of this section have the meaning shown.*

HOUSING APPEALS BOARD. *The board or agency of a city, county, or city and county which is authorized by the governing body of the city, county, or city and county to hear appeals regarding the requirements of the city, county or city and county relating to the use, maintenance and change of occupancy of buildings and structures, including requirements governing alteration, additions, repair, demolition and moving. In any area in which there is no such board or agency, "Housing Appeals Board" means the local appeals board having jurisdiction over the area.*

LOCAL APPEALS BOARD. *The board or agency of a city, county, or city and county which is authorized by the governing body of the city, county, or city and county to hear appeals regarding the building requirements of the city, county, or city and county. In any area in which there is no such board or agency, "Local Appeals Board" means the governing body of the city, county, or city and county having jurisdiction over the area.*

1.8.8.3 Appeals. *Except as otherwise provided in law, any person, firm or corporation adversely affected by a decision, order or determination by a city, county, or city and county relating to the application of building standards published in the California Building Standards Code, or any other applicable rule or regulation adopted by the Department of Housing and Community Development, or any lawfully enacted ordinance by a city, county, or city and county, may appeal the issue for resolution to the local appeals board or housing appeals board as appropriate.*

The local appeals board shall hear appeals relating to new building construction and the housing appeals board shall hear appeals relating to existing buildings.

SECTION 1.8.9
UNSAFE BUILDINGS OR STRUCTURES

1.8.9.1 Authority to enforce. *Subject to other provisions of law, the administration, enforcement, actions, proceedings, abatement, violations and penalties for unsafe buildings and structures are contained in the following statutes and regulations:*

1. *For applications subject to the State Housing Law as referenced in Section 1.8.3.2.1 of this code, refer to Health and Safety Code, Division 13, Part 1.5, commencing with Section 17910 and California Code of Regulations, Title 25, Division 1, Chapter 1, Subchapter 1, commencing with Section 1.*
2. *For applications subject to the Mobilehome Parks Act as referenced in Section 1.8.3.2.2 of this code, refer to Health and Safety Code, Division 13, Part 2.1, commencing with Section 18200 and California Code of Regulations, Title 25, Division 1, Chapter 2, commencing with Section 1000.*
3. *For applications subject to the Special Occupancy Parks Act as referenced in Section 1.8.3.2.3 of this code, refer to Health and Safety Code, Division 13, Part 2.3, commencing with Section 18860 and California Code of Regulations, Title 25, Division 1, Chapter 2.2, commencing with Section 2000.*
4. *For applications subject to the Employee Housing Act as referenced in Section 1.8.3.2.4 of this code, refer to Health and Safety Code, Division 13, Part 1, commencing with Section 17000 and California Code of Regulations, Title 25, Division 1, Chapter 1, Subchapter 3, commencing with Section 600.*
5. *For applications subject to the Factory-Built Housing Law as referenced in Section ~~1.8..2.5~~ 1.8.3.2.5 of this code, refer to Health and Safety Code, Division 13, Part 6, commencing with Section 19960 and California Code of Regulations, Title 25, Division 1, Chapter 3, Subchapter 1, commencing with Section 3000.*

1.8.9.2 Actions and proceedings. *Subject to other provisions of law, punishments, penalties and fines for violations of building standards are contained in the following statutes and regulations:*

1. *For applications subject to the State Housing Law as referenced in Section 1.8.3.2.1 of this code, refer to Health and Safety Code, Division 13, Part 1.5, commencing with Section 17910 and California Code of Regulations, Title 25, Division 1, Chapter 1, Subchapter 1, commencing with Section 1.*
2. *For applications subject to the Mobilehome Parks Act as referenced in Section 1.8.3.2.2 of this code, refer to Health and Safety Code, Division 13, Part 2.1, commencing with Section 18200 and California Code of Regulations, Title 25, Division 1, Chapter 2, commencing with Section 1000.*
3. *For applications subject to the Special Occupancy Parks Act as referenced in Section 1.8.3.2.3 of this code, refer to the Health and Safety Code, Division 13, Part 2.3, commencing with Section 18860 and California Code of Regulations, Title 25, Division 1, Chapter 2.2, commencing with Section 2000.*

4. *For applications subject to the Employee Housing Act as referenced in Section 1.8.3.2.4 of this code, refer to Health and Safety Code, Division 13, Part 1, commencing with Section 17000 and California Code of Regulations, Title 25, Division 1, Chapter 1, Subchapter 3, commencing with Section 600.*

5. *For applications subject to the Factory-Built Housing Law as referenced in Section 1.8.3.2.5 of this code, refer to Health and Safety Code, Division 13, Part 6, commencing with Section 19960 and California Code of Regulations, Title 25, Division 1, Chapter 3, Subchapter 1, commencing with Section 3000.*

SECTION 1.8.10
OTHER BUILDING REGULATIONS

1.8.10.1 Existing structures. *Subject to the requirements of California Health and Safety Code Sections 17912, 17920.3, 17922, 17922.3, 17958.8 and 17958.9, provisions relating to existing structures (additions, alterations and repairs) shall only apply as identified in the ~~California Building Code Chapter 34~~ California Existing Building Code, Matrix Adoption Table under the authority of the Department of Housing and Community Development as listed in Sections 1.8.2.1.1 through 1.8.2.1.3 of this code.*

1.8.10.2 Moved structures. *Subject to the requirements of California Health and Safety Code Sections 17922.3 and 17958.9, provisions relating to a moved residential structure are located in ~~CBC Chapter 34~~ the California Existing Building Code and shall only apply as identified in the ~~CBC Chapter 34~~ California Existing Building Code, Matrix Adoption Table under the authority of the Department of Housing and Community Development as listed in Sections 1.8.2.1.1 through 1.8.2.1.3 of this code.*

NOTE:
Authority cited: Health and Safety Code Sections 17040, 17050, 17920.9, 17921, 17921.3, 17921.6, 17921.10, 17922, 17922.6, 17922.12, 17927, 17928, 17959.6, 18300, 18552, 18554, 18620, 18630, 18640, 18670, 18690, 18691, 18865, 18871.3, 18871.4, 18873, 18873.1, 18873.2, 18873.3, 18873.4, 18873.5, 18938.3, 18944.11 and 19990; and Government Code Section 12955.1.

Reference: Health and Safety Code Sections 17000 through 17062.5, 17910 through 17995.5, 18200 through 18700, 18860 through 18874 and 19960 through 19997; and Government Code Sections 12955.1 and 12955.1.1.

---

2. HCD proposes to adopt Chapter 1, Division II, Sections R105.2 (*Building: 1 – 10 only*), R106.1, R106.1.1, R106.1.3, R106.1.4, R106.2, R109.1, R109.1.1, R109.1.1.1, R109.1.3, R109.1.4, R109.1.4.1, R109.1.4.2, R109.1.5, R109.1.5.1, R109.1.5.2, R109.1.6, R109.1.6.1 and R109.1.6.2 ONLY from the 2015 International Residential Code with new amendments, into the 2016 California Residential Code and to bring forward existing California amendments as follows:

DIVISION II
ADMINISTRATION

Division II is not adopted by the Department of Housing and Community Development or the State Fire Marshal except where specifically indicated.

SECTION R105
PERMITS

R105.2 Work exempt from permit. Exemption from permit requirements of this code shall not be deemed to grant authorization for any work to be done in any manner in violation of the provisions of this code or any other laws or ordinances of this jurisdiction. Permits shall not be required for the following:

Building:

1. One-story detached accessory structures, provided the floor area does not exceed ~~200~~ *120* square feet (~~18.58~~ *11.15* m²).

SECTION R109
INSPECTIONS

R109.1 Types of inspections. For on-site construction, from time to time the building official, upon notification from the permit holder or his agent, shall make or cause to be made any necessary inspections and shall either approve that portion of the construction as completed or shall notify the permit holder or his or her agent wherein the same fails to comply with this code. *The enforcing agency upon notification of the permit holder or their agent shall within a reasonable time make the inspections set forth in Sections R109.1.1, R109.1.1.1, R109.1.3, R109.1.4, R109.1.4.1, R109.1.4.2, R109.1.5, R109.1.5.1, R109.1.5.2, R109.1.6, R109.1.6.1 and R109.1.6.2.*

Note: *Reinforcing steel or structural framework of any part of any building or structure shall not be covered or concealed without first obtaining the approval of the enforcing agency.*

R109.1.1 Foundation inspection. Inspection of the foundation *and footings* shall be made after poles or piers are set or trenches or basement areas are excavated and any required forms erected and any required reinforcing steel is in place and supported prior to the placing of concrete. The foundation *or footing* inspection shall include excavations for thickened slabs intended for the support of bearing walls, partitions, structural supports, or equipment and special requirements for wood foundations. *Materials for the foundation shall be on the job site except where concrete is ready-mixed in accordance with ASTM C 94. Under this circumstance concrete is not required to be at the job site.*

R109.1.1.1 Concrete slab and under-floor inspection. *Concrete slab and under-floor inspections shall be made after in-slab or under-floor reinforcing steel and building service equipment, conduits, piping or other ancillary building trade products or equipment are installed, but before any concrete is placed or floor sheathing is installed, including the subfloor.*

R109.1.4 Frame and masonry inspection. Inspection of framing and masonry construction shall be made after the roof, masonry, framing, firestopping, draftstopping and bracing are in place and after ~~the plumbing, mechanical and electrical rough inspections~~ *chimneys and vents to be concealed are completed and the rough electrical, plumbing, heating, wires, pipes and ducts* are approved.

R109.1.4.1 Moisture content verification. *Moisture content of framing members shall be verified in accordance with the California Green Building Standards Code, Chapter 4, Division 4.5.*

R109.1.4.2 Lath and gypsum board inspection. *Lath and gypsum board inspections shall be made after lathing and gypsum board, interior and exterior, is in place, but before any plastering is applied or gypsum board joints and fasteners are taped and finished.*

R109.1.5 Other inspections. In addition to inspections in Sections R109.1.1 through ~~R109.1.4~~ *R109.1.4.2*, the building official shall have the authority to make or require any other inspections to ascertain compliance with this code and other laws enforced by the building official.

R109.1.5.1 Fire-resistance-rated construction inspection. Where fire-resistance-rated construction is required between dwelling units or due to location on property, the building official shall require an inspection of such construction after lathing or gypsum board or gypsum panel products are in place, but before any plaster is applied, or before board or panel joints and fasteners are taped and finished. *Protection of joints and penetrations in fire-resistance-rated assemblies shall not be concealed from view until inspected and approved.*

R109.1.5.2 Special Inspections. *For special inspections, see California Building Code, Chapter 17.*

R109.1.6.2 Operation and maintenance manual. *At the time of final inspection, a manual, compact disc, web-based reference or other media acceptable to the enforcing agency shall be placed in the building in accordance with the California Green Building Standards Code, Chapter 4, Division 4.4.*

NOTE:
Authority cited: Health and Safety Code Sections 17040, 17050, 17920.9, 17921, 17921.3, 17921.6, 17921.10, 17922, 17922.6, 17922.12, 17927, 17928, 17959.6, 18300, 18552, 18554, 18620, 18630, 18640, 18670, 18690, 18691, 18865, 18871.3, 18871.4, 18873, 18873.1, 18873.2, 18873.3, 18873.4, 18873.5, 18938.3, 18944.11 and 19990; and Government Code Section 12955.1.

Reference: Health and Safety Code Sections 17000 through 17062.5, 17910 through 17995.5, 18200 through 18700, 18860 through 18874 and 19960 through 19997; and Government Code Sections 12955.1 and 12955.1.1.

3. HCD proposes to adopt Chapter 2, from the 2015 International Residential Code with new amendments, and bring forward California existing amendments from the 2013 California Residential Code into the 2016 California Residential Code with modification as follows:

CHAPTER 2
DEFINITIONS

SECTION R201
GENERAL

R201.3 Terms defined in other codes. Where terms are not defined in this code such terms shall have meanings ascribed to them as in ~~other code publications of the International Code Council~~ *the California Building Standards Code, Title 24, California Code of Regulations.*

SECTION R202
DEFINITIONS

ALTERATION. Any construction~~, retrofit~~ or renovation to an existing structure other than repair or addition ~~that requires a permit. Also, a change in a building, electrical, gas, mechanical or plumbing system that involves an extension, addition or change to the arrangement, type or purpose of the original installation that requires a permit.~~

APPROVED. (HCD 1) *Meeting the approval of the enforcing agency, except as otherwise provided by law, when used in connection with any system, material, type of construction, fixture or appliance as the result of investigations and tests conducted by the agency, or by reason of accepted principles or tests by national authorities or technical, health, or scientific organizations or agencies.*

Notes:

1. *See Health and Safety Code Section 17920 for "Approved" as applied to residential construction and buildings or structures accessory thereto, as referenced in Section 1.8.2.1.1.*
2. *See Health and Safety Code Section 17921.1 for "Approved" as applied to the use of hotplates in residential construction referenced in Section 1.8.2.1.1.*
3. *See Health and Safety Code Section 19966 for "Approved" as applied to factory-built housing as referenced in Section 1.8.3.2.5.*
4. *See Health and Safety Code Section 18201 for "Approved" as applied to mobilehome parks as referenced in Section 1.8.3.2.2.*
5. *See Health and Safety Code Section 18862.1 for "Approved" as applied to special occupancy parks as referenced in Section 1.8.3.2.3.*

APPROVED AGENCY. An established and recognized agency regularly engaged in conducting tests or furnishing inspection services, when such agency has been approved by the building official. *(HCD 1) "Approved agency" shall mean "Listing agency" and "Testing agency."*

APPROVED LISTING AGENCY. *Any agency approved by the enforcing agency, unless otherwise provided by statute, which is in the business of listing and labeling and which makes available at least an annual published report of such listings in which specific information is included that the product has been tested to recognized standards and found to comply.*

APPROVED TESTING AGENCY. *Any agency which is determined by the enforcing agency, except as otherwise provided by statute, to have adequate personnel and expertise to carry out the testing of systems, materials, and construction fixtures or appliances.*

BUILDING. Building shall mean any one- and two-family dwelling or portion thereof, including *townhouses*, that is used, or designed or intended to be used for human habitation, for living, sleeping, cooking or eating purposes, or any combination thereof, and shall include *accessory structures* thereto.

Exceptions: *For applications listed in Section 1.8.2 regulated by the Department of Housing and Community Development, "Building" shall not include the following:*

1. *Any mobilehome as defined in Health and Safety Code Section 18008.*
2. *Any manufactured home as defined in Health and Safety Code Section 18007.*
3. *Any commercial modular as defined in Health and Safety Code Section 18001.8 or any special purpose commercial modular as defined in Section 18012.5.*
4. *Any recreational vehicle as defined in Section Health and Safety Code 18010.*
5. *Any multifamily manufactured home as defined in Section Health and Safety Code 18008.7.*

   For additional information, see Health and Safety Code Section 18908.

CLIMATE ZONES *are the 16 geographic areas of California for which the California Energy Commission has established typical weather data, prescriptive packages and energy budgets. Climate zones are defined by ZIP code and listed in Reference Joint Appendix JA2.*

DEPARTMENT. *The Department of Housing and Community Development.*

DUCT SYSTEM. ~~A continuous passageway for the transmission of air that, in addition to ducts, includes duct fittings, dampers, plenums, fans and accessory air handling equipment and appliances. For definition applicable in Chapter 11, see Section N1101.6~~ *All ducts, duct fittings, plenums and fans when assembled to form a continuous passageway for the distribution of air.*

EFFICIENCY DWELLING UNIT. *A dwelling unit containing only one habitable room and includes an efficiency unit as defined by Health and Safety Code Section 17958.1. See Section R304.*

ENFORCEMENT. *Notwithstanding other provisions of law, the applicable section of the Health and Safety Code, Section 17920, is repeated here for clarity:*

"Enforcement" means diligent effort to secure compliance, including review of plans and permit applications, response to complaints, citation of violations, and other legal process. Except as otherwise provided in this part, "enforcement" may, but need not, include inspections of existing buildings on which no complaint or permit application has been filed, and effort to secure compliance as to these existing buildings.

ENFORCEMENT AGENCY. *See "ENFORCING AGENCY."*

ENFORCING AGENCY. *The designated department or agency as specified by statute or regulation.*

FAMILY. (HCD 1) *An individual or two or more persons who are related by blood or marriage; or otherwise live together in a dwelling unit.*

FENESTRATION. ~~Skylights, roof windows, vertical windows (whether fixed or moveable); opaque doors; glazed doors; glass block; and combination opaque and glazed doors.~~
~~For definition applicable in Chapter 11, see Section N1101.6.~~*See "Fenestration Product" as defined in ~~Title 24, Part 6,~~ the California Energy Code.*

GUARD *OR GUARDRAIL.* A building component or a system of building components located near the open sides of elevated walking surfaces that minimizes the possibility of a fall from the walking surface to the lower level.

INSULATING SHEATHING. An insulating board having a thermal resistance of not less than R-2 of the core material. ~~For definition applicable in Chapter 11, see Section N1101.6.~~

LABELED. (HCD 1) *Labeled means equipment or materials to which has been attached a label, symbol or other identifying mark of an organization, approved by the Department, that maintains a periodic inspection program of production of labeled products, installations, equipment or materials and by whose labeling the manufacturer indicates compliance with appropriate standards or performance in a specified manner.*

LIMITED-DENSITY OWNER-BUILT RURAL DWELLINGS. *Any structure consisting of one or more habitable rooms intended or designed to be occupied by one family with facilities for living or sleeping, with use restricted to rural areas designated by local jurisdiction. Notwithstanding other sections of law, the applicable section of Health and Safety Code Section 17958.2 is repeated here for clarification purposes.*

Section 17958.2. *(a) Notwithstanding Section 17958, regulations of the department adopted for limited-density owner-built rural dwellings, which are codified in Article 8 (commencing with Section 74) of Subchapter 1 of Chapter 1 of Title 25 of the California Code of Regulations, shall not become operative within any city or county unless and until the governing body of the city or county makes an express finding that the application of those regulations within the city or county is reasonably necessary because of local conditions and the city or county files a copy of that finding with the department.*

(b) In adopting ordinances or regulations for limited-density owner-built rural dwellings, a city or county may make such changes or modifications in the requirements contained in Article 8 (commencing with Section 74) of Subchapter 1 of Chapter 1 of Title 25 of the California Code of Regulations that it determines are reasonably necessary because of local conditions, if the city or county files a copy of the changes or modifications and the express findings for the changes or modifications with the department. No change or modification of that type shall become effective or operative for any purpose until the finding and the change or modification has been filed with the department.

LISTED. ***(HCD 1)*** *All products that appear in a list published by an approved testing or listing agency. For additional information, see Health and Safety Code Section 17920(h).*

~~LISTED~~ LISTING AGENCY. (HCD 1 & HCD 2) *An agency approved by the department that is in the business of listing and labeling products, materials, equipment and installations tested by an approved testing agency, and that maintains a periodic inspection program on current production of listed products, equipment and installations, and that, at least annually, makes available a published report of these listings. For additional information, see Health and Safety Code Section 17920(i).*

LODGING HOUSE. ***(HCD 1)*** ~~A one-family dwelling where one or more occupants are primarily permanent in nature, and rent is paid for guestrooms.~~ *Any building or portion thereof containing not more than five guest rooms where rent is paid in money, goods, labor or otherwise, and that is occupied by the proprietor as the residence of such proprietor.*

MASONRY UNIT. Brick, tile, stone, architectural cast stone, glass block or concrete block conforming to the requirements specified in Section 2103 of the ~~International~~ *California* Building Code.

Clay. A building unit larger in size than a brick, composed of burned clay, shale, fire clay or mixtures thereof.

Concrete. A building unit or block larger in size than 12 inches by 4 inches by 4 inches (305 mm by 102 mm by 102 mm) made of cement and suitable aggregates.

Glass. Nonload-bearing masonry composed of glass units bonded by mortar.

Hollow. A masonry unit whose net cross-sectional area in any plane parallel to the loadbearing surface is less than 75 percent of its gross cross-sectional area measured in the same plane.

Solid. A masonry unit whose net cross-sectional area in every plane parallel to the loadbearing surface is 75 percent or more of its cross-sectional area measured in the same plane.

PASSIVE SOLAR ENERGY COLLECTOR. *Uses architectural components, rather than mechanical components, to provide heating or cooling for a building interior.*

REPAIR. The reconstruction or renewal of any part of an existing building for the purposes of its maintenance or to correct damage. ~~For definition applicable in Chapter 11, see Section N1101.6.~~

RISER.
~~1.~~ The vertical component of a step or stair.
~~2. A water pipe that extends vertically one full story or more to convey water to branches or to a group of fixtures.~~

SUNROOM. A one-story structure attached to a dwelling with a glazing area in excess of 40 percent of the gross area of the structure's exterior walls and roof. ~~For definition applicable in Chapter 11, see Section N1101.6~~

TESTING AGENCY. *An agency approved by the department as qualified and equipped for testing of products, materials, equipment and installations in accordance with nationally recognized standards. For additional information, see Health and Safety Code Section 17920(m).*

VENTILATION. The natural or mechanical process of supplying conditioned or unconditioned air to, or removing such air from, any space. ~~For definition applicable in Chapter 11, see Section N1101.6.~~

NOTE:
Authority cited: Health and Safety Code Sections 17040, 17050, 17920.9, 17921, 17921.3, 17921.6, 17921.10, 17922, 17922.6, 17922.12, 17927, 17928, 17959.6, 18300, 18552, 18554, 18620, 18630, 18640, 18670, 18690, 18691, 18865, 18871.3, 18871.4, 18873, 18873.1, 18873.2, 18873.3, 18873.4, 18873.5, 18938.3, 18944.11 and 19990; and Government Code Section 12955.1.

Reference: Health and Safety Code Sections 17000 through 17062.5, 17910 through 17995.5, 18200 through 18700, 18860 through 18874 and 19960 through 19997; and Government Code Sections 12955.1 and 12955.1.1.

---

4. HCD proposes to NOT adopt the following Chapter 2 definitions from the 2015 International Residential Code into the 2016 California Residential Code:

CHAPTER 2
DEFINITIONS

SECTION R202 DEFINITIONS (NON-ADOPTED)

~~**ACCESSIBLE.** Signifies access that requires the removal of an access panel or similar removable obstruction.~~

~~**ACCESSIBLE, READILY.** Signifies access without the necessity for removing a panel or similar obstruction.~~

~~**ACCESSORY STRUCTURE.** A structure that is accessory to and incidental to that of the dwelling(s) and that is located on the same lot.~~

~~**AIR ADMITTANCE VALVE.** A one-way valve designed to allow air into the plumbing drainage system where a negative pressure develops in the piping. This device shall close by gravity and seal the terminal under conditions of zero differential pressure (no flow conditions) and under positive internal pressure.~~

~~**AIR BARRIER.** See Section N1101.6 for definition applicable in Chapter 11.~~

~~**AIR BREAK (DRAINAGE SYSTEM).** An arrangement where a discharge pipe from a fixture, appliance or device drains indirectly into a receptor below the flood-level rim of the receptor, and above the trap seal.~~

~~**AIR CIRCULATION, FORCED.** A means of providing space conditioning utilizing movement of air through ducts or plenums by mechanical means.~~

~~**AIR CONDITIONING SYSTEM.** A system that consists of heat exchangers, blowers, filters, supply, exhaust and return air systems, and shall include any apparatus installed in connection therewith.~~

~~**AIR GAP, DRAINAGE SYSTEM.** The unobstructed vertical distance through free atmosphere between the outlet of a waste pipe and the flood-level rim of the fixture or receptor into which it is discharging.~~

~~**AIR GAP, WATER-DISTRIBUTION SYSTEM.** The unobstructed vertical distance through free atmosphere between the lowest opening from a water supply discharge to the flood-level rim of a plumbing fixture.~~

~~**ANTISIPHON.** A term applied to valves or mechanical devices that eliminate siphonage.~~

~~**APPLIANCE.** A device or apparatus that is manufactured and designed to utilize energy and for which this code provides specific requirements.~~

~~**BACKFLOW, DRAINAGE.** A reversal of flow in the drainage system.~~

~~**BACKFLOW PREVENTER.** A backflow prevention assembly, a backflow prevention device or other means or method to prevent backflow into the potable water supply.~~

~~**BACKFLOW PREVENTER, REDUCED-PRESSURE ZONE TYPE.** A backflow prevention device consisting of two independently acting check valves, internally force loaded to a normally closed position and separated by an intermediate chamber (or zone) in which there is an automatic relief means of venting to atmosphere internally loaded to a normally open position between two tightly closing shutoff valves and with means for testing for tightness of the checks and opening of relief means.~~

~~**BACKFLOW, WATER DISTRIBUTION.** The flow of water or other liquids into the potable water supply piping from any sources other than its intended source. Backsiphonage is one type of backflow.~~

~~**BACKPRESSURE.** Pressure created by any means in the water distribution system, which by being in excess of the pressure in the water supply mains causes a potential backflow condition.~~

~~**BACKPRESSURE, LOW HEAD.** A pressure less than or equal to 4.33 psi (29.88 kPa) or the pressure exerted by a 10 foot (3048 mm) column of water.~~

~~**BACKSIPHONAGE.** The flowing back of used or contaminated water from piping into a potable water supply pipe due to a negative pressure in such pipe.~~

~~**BACKWATER VALVE.** A device installed in a drain or pipe to prevent backflow of sewage.~~

~~**BATHROOM GROUP.** A group of fixtures, including or excluding a bidet, consisting of a water closet, lavatory, and bathtub or shower. Such fixtures are located together on the same floor level.~~

~~**BEND.** A drainage fitting, designed to provide a change in direction of a drain pipe of less than the angle specified by the amount necessary to establish the desired slope of the line (see "Elbow" and "Sweep").~~

~~**BOILER.** A self contained appliance from which hot water is circulated for heating purposes and then returned to the boiler, and that operates at water pressures not exceeding 160 pounds per square inch gage (psig) (1102 kPa gauge) and at water temperatures not exceeding 250°F (121°C).~~

~~**BRANCH.** Any part of the piping system other than a riser, main or stack.~~

~~**BRANCH, FIXTURE.** See "Fixture branch, drainage."~~

~~**BRANCH, HORIZONTAL.** See "Horizontal branch, drainage."~~

~~**BRANCH INTERVAL.** A vertical measurement of distance, 8 feet (2438 mm) or more in developed length, between the connections of horizontal branches to a drainage stack. Measurements are taken down the stack from the highest horizontal branch connection.~~

~~**BRANCH, MAIN.** A water distribution pipe that extends horizontally off a main or riser to convey water to branches or fixture groups.~~

~~**BRANCH, VENT.** A vent connecting two or more individual vents with a vent stack or stack vent.~~

~~**BTU/H.** The listed maximum capacity of an appliance, absorption unit or burner expressed in British thermal units input per hour.~~

~~**BUILDING DRAIN.** The lowest piping that collects the discharge from all other drainage piping inside the house and extends 30 inches (762 mm) in developed length of pipe, beyond the exterior walls and conveys the drainage to the building sewer.~~

~~**BUILDING SEWER.** That part of the drainage system that extends from the end of the building drain and conveys its discharge to a public sewer, private sewer, individual sewage disposal system or other point of disposal.~~

~~**CHIMNEY CONNECTOR.** A pipe that connects a fuel-burning appliance to a chimney.~~

~~**CHIMNEY TYPES.**~~

~~**Residential-type appliance.** An approved chimney for removing the products of combustion from fuel-burning, residential-type appliances producing combustion gases not in excess of 1,000°F (538°C) under normal operating conditions, but capable of producing combustion gases of 1,400°F (760°C) during intermittent forces firing for periods up to 1 hour. All temperatures shall be measured at the appliance flue outlet. Residential-type appliance chimneys include masonry and factory-built types.~~

~~**CIRCUIT VENT.** A vent that connects to a horizontal drainage branch and vents two traps to not more than eight traps or trapped fixtures connected into a battery.~~

~~**CIRCULATING HOT WATER SYSTEM.** A specifically designed water distribution system where one or more pumps are operated in the service hot water piping to circulate heated water from the water-heating equipment to fixtures and back to the water-heating equipment.~~

~~**CLEANOUT.** An accessible opening in the drainage system used for the removal of possible obstruction.~~

~~**CLIMATE ZONE.** A geographical region based on climatic criteria as specified in this code.~~

~~**COLLECTION PIPE.** Unpressurized pipe used within the collection system that drains on-site nonpotable water or rainwater to a storage tank by gravity.~~

~~**COMBINATION WASTE AND VENT SYSTEM.** A specially designed system of waste piping embodying the horizontal wet venting of one or more sinks, lavatories or floor drains by means of a common waste and vent pipe adequately sized to provide free movement of air above the flow line of the drain.~~

~~**COMMERCIAL, BUILDING.** See Section N1101.6.~~

~~**COMMON VENT.** A single pipe venting two trap arms within the same branch interval, either back-to-back or one above the other.~~

~~**CONDENSING APPLIANCE.** An appliance that condenses water generated by the burning of fuels.~~

~~**CONDITIONED AREA.** That area within a building provided with heating or cooling systems or appliances capable of maintaining, through design or heat loss/gain, 68°F (20°C) during the heating season and/or 80°F (27°C) during the cooling season, or has a fixed opening directly adjacent to a conditioned area.~~

~~**CONTAMINATION.** A high hazard or health hazard impairment of the quality of the potable water that creates an actual hazard to the public health through poisoning or through the spread of disease by sewage, industrial fluids or waste.~~

~~**CONTINUOUS WASTE.** A drain from two or more similar adjacent fixtures connected to a single trap.~~

~~**CONTROL, LIMIT.** An automatic control responsive to changes in liquid flow or level, pressure, or temperature for limiting the operation of an appliance.~~

~~**CONTROL, PRIMARY SAFETY.** A safety control responsive directly to flame properties that senses the presence or absence of flame and, in event of ignition failure or unintentional flame extinguishment, automatically causes shutdown of mechanical equipment.~~

~~**CONVECTOR.** A system incorporating heating element in an enclosure in which air enters an opening below the heating element, is heated and leaves the enclosure through an opening located above the heating element.~~

~~**CROSS CONNECTION.** Any connection between two otherwise separate piping systems that allows a flow from one system to the other.~~

~~**CURTAIN WALL.** See Section N1101.6 for definition applicable in Chapter 11.~~

~~**DAMPER, VOLUME.** A device that will restrict, retard or direct the flow of air in any duct, or the products of combustion of heat producing equipment, vent connector, vent or chimney.~~

~~**DEMAND RECIRCULATION WATER SYSTEM.** See Section N1101.6 for definition applicable in Chapter 11.~~

~~**DEVELOPED LENGTH.** The length of a pipeline measured along the center line of the pipe and fittings.~~

~~**DILUTION AIR.** Air that enters a draft hood or draft regulator and mixes with flue gases.~~

~~**DIRECT SYSTEM.** A solar thermal system in which the gas or liquid in the solar collector loop is not separated from the load.~~

~~**DIRECT-VENT APPLIANCE.** A fuel-burning appliance with a sealed combustion system that draws all air for combustion from the outside atmosphere and discharges all flue gases to the outside atmosphere.~~

~~**DRAFT.** The pressure difference existing between the appliance or any component part and the atmosphere, that causes a continuous flow of air and products of combustion through the gas passages of the appliance to the atmosphere.~~

~~**Induced draft.** The pressure difference created by the action of a fan, blower or ejector, that is located between the appliance and the chimney or vent termination.~~

~~**Natural draft.** The pressure difference created by a vent or chimney because of its height, and the temperature difference between the flue gases and the atmosphere.~~

~~**DRAFT HOOD.** A device built into an appliance, or a part of the vent connector from an appliance, that is designed to provide for the ready escape of the flue gases from the appliance in the event of no draft, backdraft or stoppage beyond the draft hood; prevent a backdraft from entering the appliance; and neutralize the effect of stack action of the chimney or gas vent on the operation of the appliance.~~

~~**DRAFT REGULATOR.** A device that functions to maintain a desired draft in the appliance by automatically reducing the draft to the desired value.~~

~~**DRAIN.** Any pipe that carries soil and water-borne wastes in a building drainage system.~~

~~**DRAIN-BACK SYSTEM.** A solar thermal system in which the fluid in the solar collector loop is drained from the collector into a holding tank under prescribed circumstances.~~

~~**DRAINAGE FITTING.** A pipe fitting designed to provide connections in the drainage system that have provisions for establishing the desired slope in the system. These fittings are made from a variety of both metals and plastics. The methods of coupling provide for required slope in the system.~~

~~**DWV.** Abbreviated term for drain, waste and vent piping as used in common plumbing practice.~~

~~**EFFECTIVE OPENING.** The minimum cross-sectional area at the point of water supply discharge, measured or expressed in terms of diameter of a circle and if the opening is not circular, the diameter of a circle of equivalent cross-sectional area. (This is applicable to air gap.)~~

~~**ELBOW.** A pressure pipe fitting designed to provide an exact change in direction of a pipe run. An elbow provides a sharp turn in the flow path (see "Bend" and "Sweep").~~

~~**EQUIPMENT.** Piping, ducts, vents, control devices and other components of systems other than appliances that are permanently installed and integrated to provide control of environmental conditions for buildings. This definition shall also include other systems specifically regulated in this code.~~

~~**EQUIVALENT LENGTH.** For determining friction losses in a piping system, the effect of a particular fitting equal to the friction loss through a straight piping length of the same nominal diameter.~~

~~**ERI REFERENCE DESIGN.** A version of the rated design that meets the minimum requirements of the 2006 International Energy Conservation Code.~~

~~**ESSENTIALLY NONTOXIC TRANSFER FLUIDS.** Fluids having a Gosselin rating of 1, including propylene glycol; mineral oil; polydimenthy oil oxane; hydrochlorofluorocarbon, chlorofluorocarbon and hydrofluorocarbon refrigerants; and FDA-approved boiler water additives for steam boilers.~~

~~**ESSENTIALLY TOXIC TRANSFER FLUIDS.** Soil, water or gray water and fluids having a Gosselin rating of 2 or more including ethylene glycol, hydrocarbon oils, ammonia refrigerants and hydrazine.~~

~~**EVAPORATIVE COOLER.** A device used for reducing air temperature by the process of evaporating water into an airstream.~~

~~**EXCESS AIR.** Air that passes through the combustion chamber and the appliance flue in excess of what is theoretically required for complete combustion.~~

~~**EXHAUST HOOD, FULL OPENING.** An exhaust hood with an opening not less than the diameter of the connecting vent.~~

~~**EXISTING INSTALLATIONS.** Any plumbing system regulated by this code that was legally installed prior to the effective date of this code, or for which a permit to install has been issued.~~

~~**FACTORY MADE AIR DUCT.** A listed and labeled duct manufactured in a factory and assembled in the field in accordance with the manufacturer's instructions and conditions of the listing.~~

~~**FIXTURE BRANCH, DRAINAGE.** A drain serving two or more fixtures that discharges into another portion of the drainage system.~~

~~**FIXTURE BRANCH, WATER SUPPLY.** A water supply pipe between the fixture supply and a main water distribution pipe or fixture group main.~~

~~**FIXTURE DRAIN.** The drain from the trap of a fixture to the junction of that drain with any other drain pipe.~~

~~**FIXTURE FITTING.**~~

~~**Supply fitting.** A fitting that controls the volume or directional flow or both of water and is either attached to or accessible from a fixture or is used with an open or atmospheric discharge.~~

~~**Waste fitting.** A combination of components that conveys the sanitary waste from the outlet of a fixture to the connection of the sanitary drainage system.~~

~~**FIXTURE GROUP, MAIN.** The main water distribution pipe (or secondary branch) serving a plumbing fixture grouping such as a bath, kitchen or laundry area to which two or more individual fixture branch pipes are connected.~~

~~**FIXTURE SUPPLY.** The water supply pipe connecting a fixture or fixture fitting to a fixture branch.~~

~~**FIXTURE UNIT, DRAINAGE (d.f.u.).** A measure of probable discharge into the drainage system by various types of plumbing fixtures, used to size DWV piping systems. The drainage fixture unit value for a particular fixture depends on its volume rate of drainage discharge, on the time duration of a single drainage operation and on the average time between successive operations.~~

~~**FIXTURE UNIT, WATER SUPPLY (w.s.f.u.).** A measure of the probable hydraulic demand on the water supply by various types of plumbing fixtures used to size water piping systems. The water supply fixture unit value for a particular fixture depends on its volume rate of supply, on the time duration of a single supply operation and on the average time between successive operations.~~

~~**FLEXIBLE AIR CONNECTOR.** A conduit for transferring air between an air duct or plenum and an air terminal unit, an air inlet or an air outlet. Such conduit is limited in its use, length and location.~~

~~**FLOOD LEVEL RIM.** The edge of the receptor or fixture from which water overflows.~~

~~**FLOOR DRAIN.** A plumbing fixture for recess in the floor having a floor level strainer intended for the purpose of the collection and disposal of waste water used in cleaning the floor and for the collection and disposal of accidental spillage to the floor.~~

~~**FLOOR FURNACE.** A self contained furnace suspended from the floor of the space being heated, taking air for combustion from outside such space, and with means for lighting the appliance from such space.~~

~~**FLOW PRESSURE.** The static pressure reading in the water supply pipe near the faucet or water outlet while the faucet or water outlet is open and flowing at capacity.~~

~~**FLUE, APPLIANCE.** The passages within an appliance through which combustion products pass from the combustion chamber to the flue collar.~~

~~**FLUE COLLAR.** The portion of a fuel-burning appliance designed for the attachment of a draft hood, vent connector or venting system.~~

~~**FLUSH VALVE.** A device located at the bottom of a flush tank that is operated to flush water closets.~~

~~**FLUSHOMETER TANK.** A device integrated within an air accumulator vessel that is designed to discharge a predetermined quantity of water to fixtures for flushing purposes.~~

~~**FLUSHOMETER VALVE.** A flushometer valve is a device that discharges a predetermined quantity of water to fixtures for flushing purposes and is actuated by direct water pressure.~~

~~**FUEL PIPING SYSTEM.** All piping, tubing, valves and fittings used to connect fuel utilization equipment to the point of fuel delivery.~~

~~**FULLWAY VALVE.** A valve that in the full open position has an opening cross-sectional area that is not less than 85 percent of the cross-sectional area of the connecting pipe.~~

~~**FURNACE.** A vented heating appliance designed or arranged to discharge heated air into a conditioned space or through a duct or ducts.~~

~~**GRADE, PIPING.** See "Slope."~~

~~**GRAY WATER.** Waste discharged from lavatories, bathtubs, showers, clothes washers and laundry trays.~~

~~**GRIDDED WATER DISTRIBUTION SYSTEM.** A water distribution system where every water distribution pipe is interconnected so as to provide two or more paths to each fixture supply pipe.~~

~~**GROUND-SOURCE HEAT PUMP LOOP SYSTEM.** Piping buried in horizontal or vertical excavations or placed in a body of water for the purpose of transporting heat transfer liquid to and from a heat pump. Included in this definition are closed loop systems in which the liquid is recirculated and open loop systems in which the liquid is drawn from a well or other source.~~

~~**HAZARDOUS LOCATION.** Any location considered to be a fire hazard for flammable vapors, dust, combustible fibers or other highly combustible substances.~~

~~**HEAT PUMP.** An appliance having heating or heating and cooling capability and that uses refrigerants to extract heat from air, liquid or other sources.~~

~~**HEATING DEGREE DAYS (HDD).** The sum, on an annual basis, of the difference between 65°F (18°C) and the mean temperature for each day as determined from "NOAA Annual Degree Days to Selected Bases Derived from the 1960-1990 Normals" or other weather data sources acceptable to the code official.~~

~~**HIGH-EFFICACY LAMPS.** See Section N1101.6 for definition applicable in Chapter 11.~~

~~**HIGH-TEMPERATURE (H.T.) CHIMNEY.** A high temperature chimney complying with the requirements of UL 103. A Type H.T. chimney is identifiable by the markings "Type H.T." on each chimney pipe section.~~

~~**HISTORIC BUILDING.** Buildings that are listed in or eligible for listing in the National Register of Historic Places, or designated as historic under an appropriate state or local law.~~

~~**HORIZONTAL BRANCH, DRAINAGE.** A drain pipe extending laterally from a soil or waste stack or building drain that receives the discharge from one or more fixture drains.~~

~~**HORIZONTAL PIPE.** Any pipe or fitting that makes an angle of less than 45 degrees (0.79 rad) with the horizontal.~~

~~**HOT WATER.** Water at a temperature greater than or equal to 110°F (43°C).~~

~~**HYDROGEN GENERATING APPLIANCE.** A self-contained package or factory-matched packages of integrated systems for generating gaseous hydrogen. Hydrogen generating appliances utilize electrolysis, reformation, chemical, or other processes to generate hydrogen.~~

~~**IGNITION SOURCE.** A flame, spark or hot surface capable of igniting flammable vapors or fumes. Such sources include appliance burners, burner ignitions and electrical switching devices.~~

~~**INDIRECT SYSTEM.** A solar thermal system in which the gas or liquid in the solar collector loop circulates between the solar collector and a heat exchanger and such gas or liquid is not drained from the system or supplied to the load during normal operation.~~

~~**INDIRECT WASTE PIPE.** A waste pipe that discharges into the drainage system through an air gap into a trap, fixture or receptor.~~

~~**INDIVIDUAL SEWAGE DISPOSAL SYSTEM.** A system for disposal of sewage by means of a septic tank or mechanical treatment, designed for use apart from a public sewer to serve a single establishment or building.~~

~~**INDIVIDUAL VENT.** A pipe installed to vent a single-fixture drain that connects with the vent system above or terminates independently outside the building.~~

~~**INDIVIDUAL WATER SUPPLY.** A supply other than an approved public water supply that serves one or more families.~~

~~**INSULATED SIDING.** A type of continuous insulation, with manufacturer-installed insulating material as an integral part of the cladding product, having a minimum R-value of R-2.~~

~~**MACERATING TOILET SYSTEMS.** A system comprised of a sump with macerating pump and with connections for a water closet and other plumbing fixtures, that is designed to accept, grind and pump wastes to an approved point of discharge.~~

~~**MAIN.** The principal pipe artery to which branches may be connected.~~

~~**MAIN SEWER.** See "Public sewer."~~

~~**MANIFOLD WATER DISTRIBUTION SYSTEMS.** A fabricated piping arrangement in which a large supply main is fitted with multiple branches in close proximity in which water is distributed separately to fixtures from each branch.~~

~~**MANUFACTURED HOME.** Manufactured home means a structure, transportable in one or more sections, that in the traveling mode is 8 body feet (2438 body mm) or more in width or 40 body feet (12,192 body mm) or more in length, or, where erected on site, is 320 square feet ($30m^2$) or more, and which is built on a permanent chassis and designed to be used as a dwelling with or without a permanent foundation when connected to the required utilities, and includes the plumbing, heating, air-conditioning and electrical systems contained therein; except that such term shall include any structure that meets all the requirements of this paragraph except the size requirements and with respect to which the manufacturer voluntarily files a certification required by the secretary (HUD) and complies with the standards established under this title. For mobile homes built prior to June 15, 1976, a label certifying compliance to the Standard for Mobile Homes, NFPA 501, in effect at the time of manufacture is required. For the purpose of these provisions, a mobile home shall be considered a manufactured home.~~

~~**MASS WALL.** Masonry or concrete walls having a mass greater than or equal to 30 pounds per square foot (146 kg/m^2), solid wood walls having a mass greater than or equal to 20 pounds per square foot (98 kg/m^2), and any other walls having a heat capacity greater than or equal to 6 $Btu/ft^2 \cdot °F$ (123 $J/(m^2 \cdot K)$).~~

~~**MECHANICAL DRAFT SYSTEM.** A venting system designed to remove flue or vent gases by mechanical means, that consists of an induced draft portion under nonpositive static pressure or a forced draft portion under positive static pressure.~~

~~**Forced-draft venting system.** A portion of a venting system using a fan or other mechanical means to cause the removal of flue or vent gases under positive static pressure.~~

~~**Induced draft venting system.** A portion of a venting system using a fan or other mechanical means to cause the removal of flue or vent gases under nonpositive static vent pressure.~~

~~**Power venting system.** A portion of a venting system using a fan or other mechanical means to cause the removal of flue or vent gases under positive static vent pressure.~~

~~**MECHANICAL EXHAUST SYSTEM.** A system for removing air from a room or space by mechanical means.~~

~~**MECHANICAL JOINT.**~~

1. ~~A connection between pipes, fittings or pipes and fittings that is not welded, brazed, caulked, soldered, solvent cemented or heat fused.~~
2. ~~A general form of gas- or liquid-tight connections obtained by the joining of parts through a positive holding mechanical construction such as, but not limited to, flanged, screwed, clamped or flared connections.~~

~~**MECHANICAL SYSTEM.** A system specifically addressed and regulated in this code and composed of components, devices, appliances and equipment.~~

~~**NATURAL DRAFT SYSTEM.** A venting system designed to remove flue or vent gases under nonpositive static vent pressure entirely by natural draft.~~

~~**OFFSET.** A combination of fittings that makes two changes in direction bringing one section of the pipe out of line but into a line parallel with the other section.~~

~~**ON-SITE NONPOTABLE WATER REUSE SYSTEMS.** Water systems for the collection, treatment, storage, distribution, and reuse of nonpotable water generated on site, including but not limited to graywater systems. This definition does not include rainwater harvesting systems.~~

~~**PITCH.** See "Slope."~~

~~**PLUMBING.** For the purpose of this code, plumbing refers to those installations, repairs, maintenance and alterations regulated by Chapters 25 through 33.~~

~~**PLUMBING APPURTENANCE.** A device or assembly that is an adjunct to the basic plumbing system and demands no additional water supply or add any discharge load to the system. It is presumed that it performs some useful function in the operation, maintenance, servicing, economy or safety of the plumbing system. Examples include filters, relief valves and aerators.~~

~~**POLLUTION.** A low hazard or non-health hazard impairment of the quality of the potable water to a degree that does not create a hazard to the public health and that does adversely and unreasonably affect the aesthetic qualities of such potable water for domestic use.~~

~~**PORTABLE FUEL CELL APPLIANCE.** A fuel cell generator of electricity that is not fixed in place. A portable fuel cell appliance utilizes a cord and plug connection to a grid-isolated load and has an integral fuel supply.~~

~~**POTABLE WATER.** Water free from impurities present in amounts sufficient to cause disease or harmful physiological effects and conforming in bacteriological and chemical quality to the requirements of the public health authority having jurisdiction.~~

~~**PRESSURE-RELIEF VALVE.** A pressure-actuated valve held closed by a spring or other means and designed to automatically relieve pressure at the pressure at which it is set.~~

~~**PUBLIC SEWER.** A common sewer directly controlled by public authority.~~

~~**PUBLIC WATER MAIN.** A water supply pipe for public use controlled by public authority.~~

~~**PURGE.** To clear of air, gas or other foreign substances.~~

~~**QUICK-CLOSING VALVE.** A valve or faucet that closes automatically where released manually or controlled by mechanical means for fast-action closing.~~

~~**R-VALUE, THERMAL RESISTANCE.** The inverse of the time rate of heat flow through a building thermal envelope element from one of its bounding surfaces to the other for a unit temperature difference between the two surfaces, under steady state conditions, per unit area ($h \cdot ft^2 \cdot °F/Btu$).~~

~~**RATED DESIGN.** A description of the proposed *building,* used to determine the energy rating index.~~

~~**RECEPTOR.** A fixture or device that receives the discharge from indirect waste pipes.~~

~~**RECLAIMED WATER.** Nonpotable water that has been derived from the treatment of waste water by a facility or system licensed or permitted to produce water meeting the *jurisdiction's* water requirements for its intended uses.~~

~~**REFLECTIVE DUCT INSULATION.** A thermal insulation assembly consisting of one or more surfaces that have an emittance of 0.1 or less, and that bound an enclosed air space or spaces.~~

~~**REFRIGERANT.** A substance used to produce refrigeration by its expansion or evaporation.~~

~~**REFRIGERANT COMPRESSOR.** A specific machine, with or without accessories, for compressing a given refrigerant vapor.~~

~~**REFRIGERATING SYSTEM.** A combination of interconnected parts forming a closed circuit in which refrigerant is circulated for the purpose of extracting, then rejecting, heat. A direct refrigerating system is one in which the evaporator or condenser of the refrigerating system is in direct contact with the air or other substances to be cooled or heated. An indirect refrigerating system is one in which a secondary coolant cooled or heated by the refrigerating system is circulated to the air or other substance to be cooled or heated.~~

~~**RELIEF VALVE, VACUUM.** A device to prevent excessive buildup of vacuum in a pressure vessel.~~

~~**RETURN AIR.** Air removed from an approved conditioned space or location and recirculated or exhausted.~~

~~**ROOM HEATER.** A freestanding heating appliance installed in the space being heated and not connected to ducts.~~

~~**ROUGH-IN.** The installation of all parts of the plumbing system that must be completed prior to the installation of fixtures. This includes DWV, water supply and built-in fixture supports.~~

~~**SANITARY SEWER.** A sewer that carries sewage and excludes storm, surface and groundwater.~~

~~**SEPTIC TANK.** A water-tight receptor that receives the discharge of a building sanitary drainage system and is constructed so as to separate solids from the liquid, digest organic matter through a period of detention, and allow the liquids to discharge into the soil outside of the tank through a system of open joint or perforated piping or a seepage pit.~~

~~**SEWAGE.** Any liquid waste containing animal matter, vegetable matter or other impurity in suspension or solution.~~

~~**SEWAGE PUMP.** A permanently installed mechanical device for removing sewage or liquid waste from a sump.~~

~~**SKYLIGHT.** See Section N1101.6 for definition applicable in Chapter 11.~~

~~**SKYLIGHT AND SLOPED GLAZING.** Glass or other transparent or translucent glazing material installed at a slope of 15 degrees (0.26 rad) or more from vertical. Glazing materials in skylights, including unit skylights, tubular daylighting devices, solariums, sunrooms, roofs and sloped walls are included in this definition.~~

~~**SKYLIGHT, UNIT.** A factory assembled, glazed fenestration unit, containing one panel of glazing material, that allows for natural daylighting through an opening in the roof assembly while preserving the weather-resistant barrier of the roof.~~

~~**SLEEPING UNIT.** See Section N1101.6 for definition applicable in Chapter 11.~~

~~**SLIP JOINT.** A mechanical-type joint used primarily on fixture traps. The joint tightness is obtained by compressing a friction-type washer such as rubber, nylon, neoprene, lead or special packing material against the pipe by the tightening of a (slip) nut.~~

~~**SLOPE.** The fall (pitch) of a line of pipe in reference to a horizontal plane. In drainage, the slope is expressed as the fall in units vertical per units horizontal (percent) for a length of pipe.~~

~~**SOIL STACK OR PIPE.** A pipe that conveys sewage containing fecal material.~~

~~**SOLAR HEAT GAIN COEFFICIENT (SHGC).** The solar heat gain through a fenestration or glazing assembly relative to the incident solar radiation (Btu/h • ft^2 • °F).~~

~~**STACK.** Any main vertical DWV line, including offsets, that extends one or more stories as directly as possible to its vent terminal.~~

~~**STACK VENT.** The extension of soil or waste stack above the highest horizontal drain connected.~~

~~**STANDARD TRUSS.** Any construction that does not permit the roof/ceiling insulation to achieve the required R-value over the exterior walls.~~

~~**STATIONARY FUEL CELL POWER PLANT.** A self contained package or factory matched packages which constitute an automatically operated assembly of integrated systems for generating useful electrical energy and recoverable thermal energy that is permanently connected and fixed in place.~~

~~**STORM SEWER, DRAIN.** A pipe used for conveying rainwater, surface water, subsurface water and similar liquid waste.~~

~~**SUBSOIL DRAIN.** A drain that collects subsurface water or seepage water and conveys such water to a place of disposal.~~

~~**SUMP.** A tank or pit that receives sewage or waste, located below the normal grade of the gravity system and that must be emptied by mechanical means.~~

~~**SUMP PUMP.** A pump installed to empty a sump. These pumps are used for removing storm water only. The pump is selected for the specific head and volume of the load and is usually operated by level controllers.~~

~~**SUPPLY AIR.** Air delivered to a conditioned space through ducts or plenums from the heat exchanger of a heating, cooling or ventilating system.~~

~~**SWEEP.** A drainage fitting designed to provide a change in direction of a drain pipe of less than the angle specified by the amount necessary to establish the desired slope of the line. Sweeps provide a longer turning radius than bends and a less turbulent flow pattern (see "Bend" and "Elbow").~~

~~**TEMPERATURE- AND PRESSURE-RELIEF (T AND P) VALVE.** A combination relief valve designed to function as both a temperature-relief and pressure-relief valve.~~

~~**TEMPERATURE-RELIEF VALVE.** A temperature-actuated valve designed to discharge automatically at the temperature at which it is set.~~

~~**THERMAL RESISTANCE, R-VALUE.** The inverse of the time rate of heat flow through a body from one of its bounding surfaces to the other for a unit temperature difference between the two surfaces, under steady state conditions, per unit area (h • ft^2 • °F/Btu) (m^2 • K)/W.~~

~~**THERMAL TRANSMITTANCE, U-FACTOR.** The coefficient of heat transmission (air to air) through a building envelope component or assembly, equal to the time rate of heat flow per unit area and unit temperature difference between the warm side and cold side air films (Btu/h • ft^2 • °F) W/(m^2 • K).~~

~~**THIRD PARTY CERTIFICATION AGENCY.** An approved agency operating a product or material certification system that incorporates initial product testing, assessment and surveillance of a manufacturer's quality control system.~~

~~**THIRD PARTY CERTIFIED.** Certification obtained by the manufacturer indicating that the function and performance characteristics of a product or material have been determined by testing and ongoing surveillance by an approved third-party certification agency. Assertion of certification is in the form of identification in accordance with the requirements of the third-party certification agency.~~

~~**THIRD PARTY TESTED.** Procedure by which an approved testing laboratory provides documentation that a product material or system conforms to specific requirements.~~

~~**TRAP.** A fitting, either separate or built into a fixture, that provides a liquid seal to prevent the emission of sewer gases without materially affecting the flow of sewage or waste water through it.~~

~~**TRAP ARM.** That portion of a fixture drain between a trap weir and the vent fitting.~~

~~**TRAP PRIMER.** A device or system of piping to maintain a water seal in a trap, typically installed where infrequent use of the trap would result in evaporation of the trap seal, such as floor drains.~~

~~**TRAP SEAL.** The trap seal is the maximum vertical depth of liquid that a trap will retain, measured between the crown weir and the top of the dip of the trap.~~

~~**U-FACTOR, THERMAL TRANSMITTANCE.** See Section N1101.6 for definition applicable to Chapter 11.~~

~~**VACUUM BREAKERS.** A device which prevents backsiphonage of water by admitting atmospheric pressure through ports to the discharge side of the device.~~

~~**VENT COLLAR.** See "Flue collar."~~

~~**VENT CONNECTOR.** That portion of a venting system which connects the flue collar or draft hood of an appliance to a vent.~~

~~**VENT DAMPER DEVICE, AUTOMATIC.** A device intended for installation in the venting system, in the outlet of an individual, automatically operated fuel burning appliance and that is designed to open the venting system automatically when the appliance is in operation and to close off the venting system automatically when the appliance is in a standby or shutdown condition.~~

~~**VENT GASES.** Products of combustion from fuel-burning appliances, plus excess air and dilution air, in the venting system above the draft hood or draft regulator.~~

~~**VENT STACK.** A vertical vent pipe installed to provide circulation of air to and from the drainage system and which extends through one or more stories.~~

~~**VENT SYSTEM.** Piping installed to equalize pneumatic pressure in a drainage system to prevent trap seal loss or blow-back due to siphonage or back pressure.~~

~~**VERTICAL PIPE.** Any pipe or fitting that makes an angle of 45 degrees (0.79 rad) or more with the horizontal.~~

~~**WASTE.** Liquid-borne waste that is free of fecal matter.~~

~~**WASTE PIPE OR STACK.** Piping that conveys only liquid sewage not containing fecal material.~~

~~**WASTE RECEPTOR.** A floor sink, standpipe, hub drain or a floor drain that receives the discharge of one or more indirect waste pipes.~~

~~**WATER DISTRIBUTION SYSTEM.** Piping which conveys water from the service to the plumbing fixtures, appliances, appurtenances, equipment, devices or other systems served, including fittings and control valves.~~

~~**WATER HEATER.** Any heating appliance or equipment that heats potable water and supplies such water to the potable hot water distribution system.~~

~~**WATER MAIN.** A water supply pipe for public use.~~

~~**WATER OUTLET.** A valved discharge opening, including a hose bibb, through which water is removed from the potable water system supplying water to a plumbing fixture or plumbing appliance that requires either an air gap or backflow prevention device for protection of the supply system.~~

~~**WATER SERVICE PIPE.** The outside pipe from the water main or other source of potable water supply to the water-distribution system inside the building, terminating at the service valve.~~

~~**WATER SUPPLY SYSTEM.** The water service pipe, the water-distributing pipes and the necessary connecting pipes, fittings, control valves and all appurtenances in or adjacent to the building or premises.~~

~~**WET VENT.** A vent that also receives the discharge of wastes from other fixtures.~~

~~**WHOLE-HOUSE MECHANICAL VENTILATION SYSTEM.** An exhaust system, supply system, or combination thereof that is designed to mechanically exchange indoor air for outdoor air when operating continuously or through a programmed intermittent schedule to satisfy the whole-house ventilation rate. For definition applicable in Chapter 11, see Section N1101.6.~~

~~**WINDBORNE DEBRIS REGION.** Areas within *hurricane-prone regions* located in accordance with one of the following:~~

~~1. Within 1 mile (1.61 km) of the coastal mean high water line where the ultimate design wind speed, Vult, is 130 mph (58 m/s) or greater.~~

NOTE:
Authority cited: Health and Safety Code Sections 17040, 17050, 17920.9, 17921, 17921.3, 17921.6, 17921.10, 17922, 17922.6, 17922.12, 17927, 17928, 17959.6, 18300, 18552, 18554, 18620, 18630, 18640, 18670, 18690, 18691, 18865, 18871.3, 18871.4, 18873, 18873.1, 18873.2, 18873.3, 18873.4, 18873.5, 18938.3, 18944.11 and 19990; and Government Code Section 12955.1.

Reference: Health and Safety Code Sections 17000 through 17062.5, 17910 through 17995.5, 18200 through 18700, 18860 through 18874 and 19960 through 19997; and Government Code Sections 12955.1 and 12955.1.1.

---

5. HCD proposes to repeal Chapter 3, Section R315 from the 2013 California Residential Code and not bring forward the existing California amendment into the 2016 California Residential Code as follows: *(See Informative Note Below)

Informative Note
HCD proposes to adopt new model code language for Carbon Monoxide Alarms from the 2015 International Residential Code into the 2016 California Residential Code in separate action, and is therefore proposing in this action to repeal the 2013 code language for carbon monoxide alarms as shown below. See item 6 in this document for proposed adoption of Carbon Monoxide Alarms.

SECTION R315
CARBON MONOXIDE ALARMS

~~***R315.1 Carbon monoxide alarms in new construction.*** *For new construction, an approved carbon monoxide alarm shall be installed in dwelling units and in sleeping units within which fuel-burning appliances are installed and in dwelling units that have attached garages. Carbon monoxide alarms shall be listed as complying with UL 2034 and be installed and maintained in accordance with NFPA 720 and the manufacturer's instructions.~~

~~***R315.1.1 Carbon monoxide detection systems.*** *Carbon monoxide detection systems that include carbon monoxide detectors and audible notification appliances installed and maintained in accordance with this section for carbon monoxide alarms and NFPA 720 shall be permitted. The carbon monoxide detectors shall be listed as complying with UL 2075.*~~

~~***R315.1.2 Power supply.*** *Carbon monoxide alarms shall receive their primary power from the building wiring where such wiring is served from a commercial source and shall be equipped with a battery back-up. Alarm wiring shall be directly connected to the permanent building wiring without a disconnecting switch other than as required for overcurrent protection.*~~

~~***Exceptions:***~~

~~1. *Where there is no commercial power supply, the carbon monoxide alarm may be solely battery operated.*~~

~~2. *Other power sources recognized for use by NFPA 720.*~~

~~***R315.1.3 Interconnection.*** *Where more than one carbon monoxide alarm is required to be installed within the dwelling unit or within a sleeping unit, the alarm shall be interconnected in a manner that activation of one alarm shall activate all of the alarms in the individual unit.*~~

~~**R315.1.4 Alarm requirements.** No person shall install, market, distribute, offer for sale or sell any carbon monoxide device in the State of California unless the device and instructions have been approved and listed by the State Fire Marshal.~~

~~Carbon monoxide alarms required by Section R315.1 shall be installed and maintained in the following locations:~~

~~1. Outside of each separate dwelling unit sleeping area in the immediate vicinity of the bedroom(s).~~

~~2. On every level of a dwelling unit including basements.~~

~~**R315.1.5 Multiple-purpose alarms.** Carbon monoxide alarms combined with smoke alarms shall comply with Section R315, all applicable standards, and requirements for listing and approval by the Office of the State Fire Marshal, for smoke alarms.~~

~~**R315.2 Carbon monoxide alarms in existing dwelling units and sleeping units.** An approved carbon monoxide alarm shall be installed in existing dwellings having a fossil fuel-burning heater or appliance, fireplace or an attached garage. Carbon monoxide alarms shall be listed as complying with UL 2034 and be installed and maintained in accordance with NFPA 720 and the manufacturer's instructions.~~

~~**R315.2.1 Carbon monoxide detection systems.** Carbon monoxide detection systems that include carbon monoxide detectors and audible notification appliances, installed and maintained in accordance with this section for carbon monoxide alarms and NFPA720 shall be permitted. The carbon monoxide detectors shall be listed as complying with UL 2075.~~

~~**R315.2.2 Existing dwellings or sleeping units requiring a permit.** When a permit is required for alterations, repairs or additions with a total cost or calculated valuation exceeding one thousand dollars ($1,000), existing dwellings or sleeping units with a fossil fuel-burning heater or appliance, fireplace, or an attached garage shall have a carbon monoxide alarm installed in accordance with Section R315.2.Carbon monoxide alarms shall only be required in the specific dwelling unit or sleeping unit for which the permit was obtained.~~

~~**R315.2.3 Existing dwellings or sleeping units not requiring a permit (no construction taking place).** Pursuant to Health and Safety Code Section 17926, a carbon monoxide alarm(s) shall be installed in every existing dwelling unit or sleeping unit with a fossil fuel-burning heater or appliance, fireplace, or an attached garage as follows:~~

~~**R315.2.3.1 Carbon monoxide alarms on or after July 1, 2011.** Carbon monoxide alarms shall be installed in accordance with Section R315.2 in existing detached single-family dwellings or sleeping units intended for human occupancy that have a fossil fuel-burning heater or appliance, fireplace or an attached garage. Carbon monoxide alarms in existing buildings are permitted to be solely battery operated or plug-in type with battery back-up in areas where no construction is taking place.~~

~~**R315.2.3.2 Carbon monoxide alarms on or after January 1, 2013.** Carbon monoxide alarms shall be installed in accordance with Section R315.2 in all other existing dwelling units intended for human occupancy as defined in Health and Safety Code Section 13262(b) that have a fossil fuel-burning heater or appliance, fireplace or an attached garage. Carbon monoxide alarms in existing buildings are permitted to be solely battery operated or plug-in type with battery back-up in areas where no construction is taking place.~~

~~**R315.2.4 Power supply.** Carbon monoxide alarms shall receive their primary power from the building wiring where such wiring is served from a commercial source and shall be equipped with a battery back-up. Alarm wiring shall be directly connected to the permanent building wiring without a disconnecting switch other than as required for overcurrent protection.~~

~~**Exceptions:**~~

~~1. In existing dwelling units where there is no commercial power supply, the carbon monoxide alarm may be solely battery operated.~~

~~2. In existing dwelling units, a carbon monoxide alarm is permitted to be solely battery operated or plug-in with battery back-up where repairs or alterations do not result in the removal of wall and ceiling finishes.~~

~~3. In existing dwelling units, a carbon monoxide alarm is permitted to be solely battery operated or plug-in with battery back-up where repairs or alterations are limited to the exterior surfaces of dwellings, such as~~

~~the replacement of roofing or siding, or the addition or replacement of windows or doors, or the addition of a porch or deck.~~

~~4. In existing dwelling units, a carbon monoxide alarm is permitted to be solely battery operated or plug-in with battery back-up when work is limited to the installation, alteration or repair of plumbing or mechanical systems or the installation, alteration or repair of electrical systems, which do not result in the removal of interior wall or ceiling finishes exposing the structure.~~

~~5. Other power sources recognized for use by NFPA 720.~~

~~**R315.2.5 Interconnection.** Where more than one carbon monoxide alarm is required to be installed within the dwelling unit or within a sleeping unit, the alarm shall be interconnected in a manner that activation of one alarm shall activate all of the alarms in the individual unit.~~

~~**Exceptions:**~~

~~1. In existing dwelling units, interconnection is not required where repairs do not result in the removal of wall and ceiling finishes and no previous method for interconnection existed.~~

~~2. In existing dwelling units, carbon monoxide alarms are not required to be interconnected where no construction is taking place.~~

~~3. In existing dwelling units, carbon monoxide alarms are not required to be interconnected where repairs or alterations are limited to the exterior surfaces of dwellings, such as the replacement of roofing or siding, or the addition or replacement of windows or doors, or the addition of a porch or deck.~~

~~4. In existing dwelling units, carbon monoxide alarms are not required to be interconnected when work is limited to the installation, alteration or repair of plumbing or mechanical systems or the installation, alteration or repair of electrical systems, which do not result in the removal of interior wall or ceiling finishes exposing the structure.~~

~~**R315.2.6 Alarm requirements.** No person shall install, market, distribute, offer for sale, or sell any carbon monoxide device in the State of California unless the device and instructions have been approved and listed by the State Fire Marshal.~~

~~Carbon monoxide alarms required by Section R315.2 shall be installed in the following locations:~~

~~1. Outside of each separate dwelling unit sleeping area in the immediate vicinity of the bedroom(s).~~

~~2. On every level of a dwelling unit including basements.~~

NOTE:
Authority cited: Health and Safety Code Sections 17040, 17050, 17920.9, 17921, 17921.3, 17921.6, 17921.10, 17922, 17922.6, 17922.12, 17927, 17928, 17959.6, 18300, 18552, 18554, 18620, 18630, 18640, 18670, 18690, 18691, 18865, 18871.3, 18871.4, 18873, 18873.1, 18873.2, 18873.3, 18873.4, 18873.5, 18938.3, 18944.11 and 19990; and Government Code Section 12955.1.

Reference: Health and Safety Code Sections 17000 through 17062.5, 17910 through 17995.5, 18200 through 18700, 18860 through 18874 and 19960 through 19997; and Government Code Sections 12955.1 and 12955.1.1.

---

6. HCD proposes to adopt Chapter 3, except Figure R307.1, and Sections R313, R322.1.9 and R326 from the 2015 International Residential Code into the 2016 California Residential Code with amendments as follows:

CHAPTER 3
BUILDING PLANNING

SECTION R300
SITE DRAINAGE

R300.1 Storm water drainage and retention during construction. *Projects which disturb less than one acre of soil and are not part of a larger common plan of development which in total disturbs one acre or more, shall manage*

storm water drainage during construction in accordance with the California Green Building Standards Code, Chapter 4, Division 4.1.

R300.2 Grading and paving. *Construction plans shall indicate how the site grading or drainage system will manage all surface water flows to keep water from entering buildings in accordance with the California Green Building Standards Code, Chapter 4, Division 4.1.*

SECTION R301
DESIGN CRITERIA

R301.1.1 Alternative provisions. As an alternative to the requirements in Section R301.1 the following standards are permitted subject to the limitations of this code and the limitations therein. Where engineered design is used in conjunction with these standards, the design shall comply with the ~~International~~ *California* Building Code.

1. AF&PA Wood Frame Construction Manual (WFCM).
2. AISI Standard for Cold-Formed Steel Framing—Prescriptive Method for One- and Two-Family Dwellings (AISI S230).
3. ICC Standard on the Design and Construction of Log Structures (ICC 400).

R301.1.1.1 Alternative provisions for limited-density owner-built rural dwellings. *The purpose of this subsection is to permit alternatives that provide minimum protection of life, limb, health, property, safety and welfare of the general public and the owners and occupants of limited-density owner-built rural dwellings as defined in Chapter 2 of this code. For additional information see Chapter 1, Subchapter 1, Article 8, of Title 25, California Code of Regulations, commencing with Section 74.*

To meet compliance with the requirements of this code, provisions of Section R301.1.1.1, Items 1 through 5 may be utilized for limited-density owner-built rural dwellings when the materials, methods of construction, or appliances are determined appropriate or suitable for their intended purpose by the local enforcing agency.

1. *A limited-density owner-built rural dwelling may be of any type of construction which will provide for a sound structural condition. Structural hazards which result in an unsound condition and which may constitute a substandard building are delineated in Section 17920.3 of the Health and Safety Code.*
2. *There shall be no requirements for room dimensions as required in Chapter 3, provided there is adequate light and ventilation and means of egress.*
3. *There shall be no specified requirement for heating capacity or for temperature maintenance. The use of solid-fuel or solar heating devices shall be deemed as complying with the requirements of Chapter 3. If nonrenewable fuel is used in these dwellings, rooms so heated shall meet current installation standards.*
4. *Pier foundations, stone masonry footings and foundations, pressure-treated lumber, poles or equivalent foundation materials or designs may be used provided that bearing is sufficient.*
5. *Owner-produced or used materials and appliances may be utilized unless found not to be of sufficient strength or durability to perform the intended function. Owner-produced or used lumber, or shakes and shingles may be utilized unless found to contain dry rot, excessive splitting or other defects obviously rendering the material unfit in strength or durability for the intended purpose.*

R301.1.3 Engineered design. When a building of otherwise conventional construction contains structural elements exceeding the limits of Section R301 or otherwise not conforming to this code, these elements shall be designed in accordance with accepted engineering practice. The extent of such design need only demonstrate compliance of nonconventional elements with other applicable provisions and shall be compatible with the performance of the conventional framed system. Engineered design in accordance with the ~~International~~ *California* Building Code is permitted for all buildings and structures, and parts thereof, included in the scope of this code.

R301.1.3.1 California licensed architect or engineer. *When any portion of any structure deviates from substantial compliance with conventional framing requirements for woodframe construction found in this code, the building official shall require the construction documents to be approved and stamped by a California licensed architect or engineer for that irregular or non-conforming portion of work. Notwithstanding other sections of law, the law establishing these provisions is found in Business and Professions Code Sections 5537 and 6737.1.*

R301.1.3.2 Woodframe structures greater than two-stories. *The building official shall require construction documents to be approved and stamped by a California licensed architect or engineer for all dwellings of*

woodframe construction more than two stories and basement in height. Notwithstanding other sections of law, the law establishing these provisions is found in Business and Professions Code Sections 5537 and 6737.1.

R301.1.3.3 Structures other than woodframe. *The building official shall require floor, wall or roof-ceiling structural elements in dwellings designed of cold-formed steel, concrete, masonry or structural insulated panels prescribed by this code to be approved and stamped by a California licensed architect or engineer. Notwithstanding other sections of law, the law establishing these provisions is found in Business and Professions Code Sections 5537 and 6737.1.*

TABLE R301.2(1)
CLIMATIC AND GEOGRAPHIC DESIGN CRITERIA

GROUND SNOW LOAD	WIND DESIGN				SEISMIC DESIGN CATEGORY[f]	SUBJECT TO DAMAGE FROM			WINTER DESIGN TEMP[e]	ICE BARRRIER UNDER-LAYMENT REQUIRED[h]	FLOOD HAZARDS[g]	AIR FREEZING INDEX[i]	MEAN ANNUAL TEMP[j]
	Speed[d] (mph)	Topographic Effects[k]	Special wind region[l]	Wind-borne debris zone[m]		Weathering[a]	Frostline depth[b]	Termite[c]					

For SI: 1 pound per square foot = 0.0479 kPa, 1 mile per hour = 0.447m/s.

a. Weathering may require a higher strength concrete or grade of masonry than necessary to satisfy the structural requirements of this code. The weathering column shall be filled in with the weathering index (i.e., "negligible," "moderate" or "severe") for concrete as determined from the Weathering Probability Map (Figure R301.2(3)). The grade of masonry units shall be determined from ASTM C 34, C 55, C 62, C 73, C 90, C 129, C 145, C 216 or C 652.
b. The frost line depth may require deeper footings than indicated in Figure R403.1(1). The jurisdiction shall fill in the frost line depth column with the minimum depth of footing below finish grade.
c. The jurisdiction shall fill in this part of the table to indicate the need for protection depending on whether there has been a history of local subterranean termite damage.
d. The jurisdiction shall fill in this part of the table with the wind speed from the basic wind speed map (Figure R301.2(4)A).Wind exposure category shall be determined on a site-specific basis in accordance with Section R301.2.1.4.
e. ~~The outdoor design dry-bulb temperature shall be selected from the columns of 97½ percent values for winter from Appendix D of the *International Plumbing Code*. Deviations from the Appendix D temperatures~~ *Temperatures* shall be permitted to reflect local climates or local weather experience as determined by the building official.
f. The jurisdiction shall fill in this part of the table with the seismic design category determined from Section R301.2.2.1.
g. The jurisdiction shall fill in this part of the table with (a) the date of the jurisdiction's entry into the National Flood Insurance Program (date of adoption of the first code or ordinance for management of flood hazard areas), (b) the date(s) of the Flood Insurance Study and (c) the panel numbers and dates of all currently effective FIRMs and FBFMs or other flood hazard map adopted by the authority having jurisdiction, as amended.
h. In accordance with Sections R905.1.2, R905.4.3.1, R905.5.3.1, R905.6.3.1, R905.7.3.1 and R905.8.3.1, where there has been a history of local damage from the effects of ice damming, the jurisdiction shall fill in this part of the table with "YES." Otherwise, the jurisdiction shall fill in this part of the table with "NO."
i. The jurisdiction shall fill in this part of the table with the 100-year return period air freezing index (BF-days) from Figure R403.3(2) or from the 100-year (99 percent) value on the National Climatic Data Center data table "Air Freezing Index- USA Method (Base 32°F)" at www.ncdc.noaa.gov/fpsf.html.
j. The jurisdiction shall fill in this part of the table with the mean annual temperature from the National Climatic Data Center data table "Air Freezing Index-USA Method (Base 32°F)" at www.ncdc.noaa.gov/fpsf.html.
k. In accordance with Section R301.2.1.5, where there is local historical data documenting structural damage to buildings due to topographic wind speed-up effects, the jurisdiction shall fill in this part of the table with "YES." Otherwise, the jurisdiction shall indicate "NO" in this part of the table.
l. In accordance with Figure R301.2(4)A, where there is local historical data documenting unusual wind conditions, the jurisdiction shall fill in this part of the table with "YES" and identify any specific requirements. Otherwise, the jurisdiction shall indicate "NO" in this part of the table.
m. In accordance with Section R301.2.1.2.1, the jurisdiction shall indicate the wind-borne debris wind zone(s). Otherwise, the jurisdiction shall indicate "NO" in this part of the table.

2328

R301.2.1.1 Wind limitations and wind design required. The wind provisions of this code shall not apply to design of buildings where wind design is required in accordance with Figure R301.2(4)B.

Exceptions: ... (No change to text)

In regions where wind design is required in accordance with Figure R301.2(4)B, the design of the buildings for wind loads shall be in accordance with one or more of the following methods:

1. AF&PA Wood Frame Construction Manual (WFCM).
2. ICC Standard for Residential Construction in High Wind Regions (ICC 600).
3. ASCE Minimum Design Loads for Buildings and Other Structures (ASCE 7).
4. AISI Standard for Cold-Formed Steel Framing—Prescriptive Method For One- and Two-Family Dwellings (AISI S230).
5. ~~International~~ *California* Building Code.

The elements of design not addressed by the methods in Items 1 through 5 shall be in accordance with the provisions of this code.

When ASCE 7 or the ~~International~~ *California* Building Code is used for the design of the building, the wind speed map and exposure category requirements as specified in ASCE 7 and the ~~International~~ *California* Building Code shall be used.

R301.2.2.1.1 Alternate determination of seismic design category. The seismic design categories and corresponding short-period design spectral response accelerations, S_{DS} shown in Figure R301.2(2) are based on soil Site Class D, as defined in Section 1613.3.2 of the ~~International~~ *California* Building Code. If soil conditions are other than Site Class D, the short period design spectral response accelerations, S_{DS}, for a site can be determined according to Section 1613.3 of the ~~International~~ *California* Building Code. The value of S_{DS} determined according to Section 1613.3 of the ~~International~~ *California* Building Code is permitted to be used to set the seismic design category according to Table R301.2.2.1.1, and to interpolate between values in Tables R602.10.1.3(3), R603.9.2(1) and other seismic design requirements of this code.

R301.2.2.1.2 Alternative determination of Seismic Design Category E. Buildings located in Seismic Design Category E in accordance with Figure R301.2(2) are permitted to be reclassified as being in Seismic Design Category D_2 provided one of the following is done:

1. A more detailed evaluation of the seismic design category is made in accordance with the provisions and maps of the ~~International~~ *California* Building Code. Buildings located in Seismic Design Category E per Table R301.2.2.1.1, but located in Seismic Design Category D per the ~~International~~ *California* Building Code, may be designed using the Seismic Design Category D_2 requirements of this code.
2. .... (No change to text)

R301.2.2.3.7 Anchorage of water heaters. Water heaters shall be anchored against movement and overturning in accordance with ~~Section M1307.2~~ *the California Plumbing Code*.

R301.2.2.4 Seismic Design Category E. Buildings in Seismic Design Category E shall be designed to resist seismic loads in accordance with the ~~International~~ *California* Building Code, except when the seismic design category is reclassified to a lower seismic design category in accordance with Section R301.2.2.1. Components of buildings not required to be designed to resist seismic loads shall be constructed in accordance with the provisions of this code.

R301.3 Story height. The wind and seismic provisions of this code shall apply to buildings with story heights not exceeding the following:

1. (No change to text)
2. (No change to text)
3. (No change to text)
4. (No change to text)
5. For structural insulated panel (SIP) walls, the story height shall be not greater than 11 feet 7 inches (3531 mm) and the bearing wall height per story as permitted by Section R610 tables shall not exceed 10 feet (3048 mm).

Individual walls or walls studs shall be permitted to exceed these limits as permitted by Chapter 6 provisions, provided that story heights are not exceeded. An engineered design shall be provided for the wall or wall framing members where the limits of Chapter 6 are exceeded. Where the story height limits of this section are exceeded, the design of the building, or the noncompliant portions thereof, to resist wind and seismic loads shall be in accordance with the ~~International~~ *California* Building Code.

SECTION R302
FIRE-RESISTANT CONSTRUCTION

R302.1 Exterior walls. Construction, projections, openings and penetrations of exterior walls of dwellings and accessory buildings shall comply with Table R302.1(1); or dwellings and accessory buildings equipped throughout with an automatic sprinkler system installed in accordance with Section ~~P2904~~ *R313* shall comply with Table 302.1(2).

Exceptions: ... (No change to text)

R302.2 Townhouses. Common walls separating townhouses shall be assigned a fire-resistance rating in accordance with Section R302.2, Item 1 or 2. The common wall shared by two townhouses shall be constructed without plumbing or mechanical equipment, ducts or vents in the cavity of the common wall. The wall shall be rated for fire exposure from both sides and shall extend to and be tight against exterior walls and the underside of the roof sheathing. Electrical installations shall be in accordance with ~~Chapter 34 through 43~~ *the California Electrical Code*. Penetrations of the membrane of common walls for electrical outlet boxes shall be in accordance with Section R302.4.

1. Where a fire sprinkler system in accordance with Section ~~P2904~~ *R313* is provided, the common wall shall be not less than a 1-hour fire-resistance-rated wall assembly tested in accordance with ASTM E 119 or UL 263.
2. Where a fire sprinkler system in accordance with Section ~~P2904~~ *R313* is not provided, the common wall shall be not less than a 2-hour fire-resistance-rated wall assembly tested in accordance with ASTM E 119 or UL 263.

R302.5.1 Opening protection. Openings from a private garage directly into a room used for sleeping purposes shall not be permitted. Other openings between the garage and residence shall be equipped with solid wood doors not less than 1 3/8 inches (35 mm) in thickness, solid or honeycomb-core steel doors not less than 1 3/8 inches (35 mm) thick, or 20-minute fire-rated doors, equipped with self-closing *and self-latching* devices.

R302.6 Dwelling-garage fire separation. The garage shall be separated as required by Table R302.6. Openings in garage walls shall comply with Section R302.5. Attachment of gypsum board shall comply with Table R702.3.5. The wall separation provisions of Table R302.6 shall not apply to garage walls that are perpendicular to the adjacent dwelling unit wall. *A separation is not required between the dwelling unit and a carport, provided the carport is entirely open on two or more sides and there are not enclosed areas above.*

R302.14 (formerly R302.13) Combustible insulation clearance. Combustible insulation shall be separated not less than 3 inches (76 mm) from recessed luminaires, fan motors and other heat-producing devices.

Exception: Where heat-producing devices are listed for lesser clearances, combustible insulation complying with the listing requirements shall be separated in accordance with the conditions stipulated in the listing.

Recessed luminaires installed in the building ~~thermal~~ envelope shall meet *or exceed* the requirements ~~of Section N1102.4.5 of this code~~ *specified in the California Energy Code for recessed luminaires installed in insulated ceilings.*

SECTION R303
LIGHT, VENTILATION AND HEATING

R303.1 Habitable rooms. All habitable rooms shall have an aggregate glazing area of not less than 8 percent of the floor area of such rooms. Natural ventilation shall be through windows, skylights, doors, louvers or other approved openings to the outdoor air. Such openings shall be provided with ready access or shall otherwise be readily controllable by the building occupants. The openable area to the outdoors shall be not less than 4 percent of the floor area being ventilated.

Exceptions:

1. The glazed areas need not be openable where the opening is not required by Section R310 and a whole-house mechanical ventilation system is installed in accordance with ~~Section M1507~~ *the California Mechanical Code.*

2. The glazed areas need not be installed in rooms where Exception 1 is satisfied and artificial light is provided that is capable of producing an average illumination of 6 footcandles (65 lux) over the area of the room at a height of 30 inches (762 mm) above the floor level.

3. Use of sunroom and patio covers, as defined in Section R202, shall be permitted for natural ventilation if in excess of 40 percent of the exterior sunroom walls are open, or are enclosed only by insect screening.

4. *The windows, doors, louvers and other approved closeable openings not required by Section R310 may open into a passive solar energy collector for ventilation required by this section. The area of ventilation openings to the outside of the passive solar energy collector shall be increased to compensate for the openings required by the interior space.*

5. *Glazed openings may open into a passive solar energy collector provided the area of exterior glazed opening(s) into the passive solar energy collector is increased to compensate for the area required by the interior space.*

R303.3 Bathrooms. Bathrooms, water closet compartments and other similar rooms shall be provided with aggregate glazing area in windows of not less than 3 square feet (0.3 m^2), one-half of which must be openable.

Exception: The glazed areas shall not be required where artificial light and a local exhaust system are provided. The minimum local exhaust rates shall be ~~determined~~ *50 cubic feet per minute (25 L/s) for intermittent ventilation or 20 cubic feet per minute (10 L/s) for continuous ventilation* in accordance with ~~Section M1507~~ *the California Mechanical Code, Chapter 4.* Exhaust air from the space shall be exhausted directly to the outdoors.

R303.3.1 Bathroom exhaust fans. *Each bathroom containing a bathtub, shower, or tub/shower combination shall be mechanically ventilated for purposes of humidity control in accordance with the California Mechanical Code, Chapter 4; and the California Green Building Standards Code, Chapter 4, Division 4.5.*

Note: *Window operation is not a permissible method of providing bathroom exhaust for humidity control.*

R303.4 ~~Mechanical~~ Ventilation. ~~Where the air infiltration rate of a dwelling unit is less than 5 air changes per hour where tested with a blower door at a pressure of 0.2 inch w.c (50 Pa) in accordance with Section N1102.4.1.2, the dwelling unit shall be provided with whole-house mechanical ventilation in accordance with M1507.3~~ *Ventilation air rates shall be in compliance with the California Mechanical Code.*

R303.8.1.1 Passive solar energy collectors. *When a passive solar energy collector is designed as a conditioned area it shall comply with the California Energy Code~~, Title 24, Part 6~~. Nonconditioned passive solar energy collectors are exempt from ~~Title 24, Part 6~~ the California Energy Code.*

R303.9 Required heating. Where the winter design temperature in Table R301.2(1) is below 60°F (16°C), every dwelling unit shall be provided with heating facilities capable of maintaining a minimum room temperature of not less than 68°F (20°C) at a point 3 feet (914 mm) above the floor and 2 feet (610 mm) from exterior walls in all habitable rooms at the design temperature. The installation of one or more portable space heaters shall not be used to achieve compliance with this section.

Note: *See Section R301.1.1.1 for limited-density owner-built rural dwellings.*

SECTION R304
MINIMUM ROOM AREAS

R304.2 (formerly R304.3) Minimum dimensions. Habitable rooms shall not be less than 7 feet (2134 mm) in any horizontal dimension.

Exceptions:

1. Kitchens.

2. *Limited-density owner-built rural dwellings. See Section R301.1.1.1.*

R304.5 Efficiency dwelling units. (HCD 1) *Unless modified by local ordinance pursuant to Health and Safety Code Section 17958.1, efficiency dwelling units shall comply with the following:*

1. *The unit shall have a living room of not less than 220 square feet (20.4 m^2) of floor area. An additional 100 square feet (9.3 m^2) of floor area shall be provided for each occupant of such unit in excess of two.*

2. *The unit shall be provided with a separate closet.*

3. *The unit shall be provided with a kitchen sink, cooking appliance and refrigeration facilities, each having a clear working space of not less than 30 inches (762 mm) in front. Light and ventilation conforming to this code shall be provided.*

4. *The unit shall be provided with a separate bathroom containing a water closet, lavatory and bathtub or shower.*

SECTION R307
TOILET, BATH AND SHOWER SPACES

R307.1 Space required. Fixtures shall be spaced in accordance with ~~Figure R307.1, and In accordance with the requirements of Section P2705.1~~ *the California Plumbing Code.*

~~**FIGURE R307.1**~~
~~**MINIMUM FIXTURE CLEARANCES**~~
(NOT ADOPTED IN CA)

SECTION R308
GLAZING

R308.5 Site built windows. Site built windows shall comply with Section 2404 of the ~~International~~ *California* Building Code.

SECTION R309
GARAGES AND CARPORTS

R309.4 Automatic garage door openers. Automatic garage door openers, if provided, shall be listed and labeled in accordance with UL 325. *See Health and Safety Code Sections 19890 and 19891 for additional provisions for residential garage door openers.*

R309.7 Extension garage door springs. *Every extension garage door spring sold or offered for sale, whether new or sold as a replacement, or installed in any garage or carport which is accessory to a dwelling covered by this code, shall conform to the requirements for garage door springs located in Section 1211 of the California Building Code.*

R309.8 Electric vehicle (EV) charging infrastructure. *Newly constructed one- and two-family dwellings and townhouses with attached private garages shall comply with EV infrastructure requirements in accordance with the California Green Building Standards Code, Chapter 4, Division 4.1.*

SECTION R310
EMERGENCY ESCAPE AND RESCUE OPENINGS

R310.2.2 Window sill height. Where a window is provided as the emergency escape and rescue opening, it shall have ~~a sill height of not more than 44 inches (1118 mm) above the floor~~ *the bottom of the clear opening not greater than 44 inches (1118 mm) measured from the floor*; where the sill height is below grade, it shall be provided with a window well in accordance with Section R310.2.3.

SECTION R312
GUARDS AND WINDOW FALL PROTECTION

R312.1.2 Height. Required guards at open-sided walking surfaces, including stairs, porches, balconies or landings, shall be not less than ~~36~~ *42* inches (~~914~~ *1067* mm) in height as measured vertically above the adjacent walking surface or the line connecting the leading edges of the treads.

Exceptions: ... (No change to text)

SECTION R315
CARBON MONOXIDE ALARMS

R315.1 General. Carbon monoxide alarms shall comply with Section R315.

R315.1.1 Listings. Carbon monoxide alarms shall be listed in accordance with UL 2034. Combination carbon monoxide and smoke alarms shall be listed in accordance with UL 2034 and UL 217.

No person shall install, market, distribute, offer for sale, or sell any carbon monoxide device in the State of California unless the device and instructions have been approved and listed by the Office of the State Fire Marshal.

R315.2 Where required. Carbon monoxide alarms shall be provided in accordance with Sections R315.2.1 and R315.2.2.

Pursuant to Health and Safety Code Section 17926, carbon monoxide device shall be installed in all existing dwelling units as required in this section.

R315.2.1 ***Existing buildings and*** **new construction.** For *existing buildings and* new construction, carbon monoxide alarms shall be provided in dwelling units where either or both of the following conditions exist.

1. The dwelling unit contains a fuel-fired appliance *or fireplace*.
2. The dwelling unit has an attached garage with an opening that communicates with the dwelling unit.

R315.2.2 Alterations, repairs and additions. ~~Where alterations, repairs or additions requiring a permit occur, or where one or more sleeping rooms are added or created in existing dwellings, the individual dwelling unit shall be equipped with carbon monoxide alarms located as required for new dwellings.~~

~~**Exceptions:**~~

~~1. Work involving the exterior surfaces of dwellings, such as the replacement of roofing or siding, or the addition or replacement of windows or doors, or the addition of a porch or deck, is exempt from the requirements of this section.~~
~~2. Installation, alteration or repairs of plumbing or mechanical systems are exempt from the requirements of this section.~~

Where an addition is made to an existing dwelling, or a fuel-burning heater, appliance, or fireplace is added to an existing dwelling, not previously required to be provided with carbon monoxide alarms, new carbon monoxide alarms shall be installed in accordance with Section R315.

R315.3 Location. Carbon monoxide alarms in dwelling units shall be installed *and maintained in accordance with the manufacturer's published instructions in the following locations:*

1. ~~outside~~ *Outside* of each separate sleeping area in the immediate vicinity of the bedrooms.
2. *On every occupiable level of a dwelling unit, including basements.*
3. Where a fuel-burning appliance is located within a bedroom or its attached bathroom, a carbon monoxide alarm shall be installed within the bedroom.

R315.4 Combination alarms. Combination carbon monoxide and smoke alarms shall be permitted to be used in lieu of carbon monoxide alarms.

Combination carbon monoxide/smoke alarms shall comply with Section R315, and all requirements for listing and approval by the Office of the State Fire Marshal for smoke alarms.

R315.5 Power source. Carbon monoxide alarms shall receive their primary power from the building wiring where such wiring is served from a commercial source and, where primary power is interrupted, shall receive power from a battery. Wiring shall be permanent and without a disconnecting switch other than those required for overcurrent protection.

Exceptions:

1. Carbon monoxide alarms shall be permitted to be battery operated where installed in buildings without commercial power.
2. Carbon monoxide alarms installed in accordance with Section R315.2.2 shall be permitted to be battery powered.
3. *Carbon monoxide alarms in Group R occupancies shall be permitted to receive their primary power from other power sources recognized for use by NFPA 720.*
4. *Carbon monoxide alarms in Group R occupancies shall be permitted to be battery-powered or plug-in with a battery backup in existing buildings built prior to January 1, 2011, under any of the following conditions:*

4.1. No construction is taking place.
4.2. Repairs or alterations do not result in the removal of interior wall and ceiling finishes exposing the structure in areas/spaces where carbon monoxide alarms are required.
4.3. Repairs or alterations are limited to the exterior surfaces of dwellings, such as the replacement of roofing or siding, or the addition or replacement of windows or doors, or the addition of a porch or deck.
4.4. Work is limited to the installation, alteration or repair of plumbing, mechanical or electrical systems, which do not result in the removal of interior wall or ceiling finishes exposing the structure in areas/spaces where carbon monoxide alarms are required.

R315.6 Carbon monoxide detection systems. Carbon monoxide detection systems shall be permitted to be used in lieu of carbon monoxide alarms and shall comply with Sections R315.6.1 through R315.6.4.

R315.6.1 General. Household carbon monoxide detection systems shall comply with NFPA 720. Carbon monoxide detectors shall be listed in accordance with UL 2075.

R315.6.2 Location. Carbon monoxide detectors shall be installed *and maintained* in the locations specified in Section R315.3 *or NFPA 720* ~~These locations supersede the locations specified in NFPA 720~~.

R315.6.3 Permanent fixture. Where a household carbon monoxide detection system is installed, it shall become a permanent fixture of the occupancy and owned by the homeowner.

R315.6.4 Combination detectors. Combination carbon monoxide and smoke detectors shall be permitted to be installed in carbon monoxide detection systems in lieu of carbon monoxide detectors, provided that they are listed in accordance with UL 2075 and UL 268.

Combination carbon monoxide/smoke detectors shall comply with all requirements for listing and approval by the Office of the State Fire Marshal for smoke alarms.

315.7 Interconnection. *Where more than one carbon monoxide alarm is required to be installed within a dwelling unit or within a sleeping unit in Group R occupancies, the alarms shall be interconnected in a manner that activation of one alarm shall activate all of the alarms in the individual unit.*

Exception: *Interconnection is not required in existing buildings, built prior to January 1, 2011, under any of the following conditions:*

1. *Physical interconnection is not required where listed wireless alarms are installed and all alarms sound upon activation of one alarm.*
2. *No construction is taking place.*
3. *Repairs or alterations do not result in the removal of interior wall and ceiling finishes exposing the structure in areas/spaces where carbon monoxide alarms are required.*
4. *Repairs or alterations are limited to the exterior surfaces of dwellings, such as the replacement of roofing or siding, or the addition or replacement of windows or doors, or the addition of a porch or deck.*
5. *Work is limited to the installation, alteration or repair of plumbing, mechanical, or electrical systems, which do not result in the removal of interior wall or ceiling finishes exposing the structure in areas/spaces where carbon monoxide alarms are required.*

SECTION R320
ACCESSIBILITY

R320.1 Scope. ~~Where there are four or more dwelling units or sleeping units in a single structure, the provisions of Chapter 11 of the International Building Code for Group R-3 shall apply.~~ *Dwelling units in a building consisting of three or more dwelling units or four or more condominium units shall meet the requirements of the California Building Code Chapter 11A. Covered Multifamily Dwellings include but are not limited to dwelling units listed in Section 1.8.2.1.2. Dwelling units within a single structure separated by firewalls do not constitute separate buildings.*

~~**R320.1.1 Guestrooms.** A dwelling with guestrooms shall comply with the provisions of Chapter 11 of the International Building Code for Group R-3. For the purpose of applying the requirements of Chapter 11of the International Building Code, guestrooms shall be considered to be sleeping units.~~

~~**Exception:** Owner-occupied lodging houses with five or fewer guestrooms constructed in accordance with the International Residential Code are not required to be accessible.~~

SECTION R321
ELEVATORS AND PLATFORM LIFTS

R321.3 Accessibility. Elevators or platform *(wheelchair)* lifts that are part of an accessible route required by Chapter 11*A* of the ~~International~~ *California* Building Code, shall comply with ~~ICC A117.1~~ *the requirements in* ~~*Section 1124A*~~ *Chapter 11A of the California Building Code.*

SECTION R322
FLOOD-RESISTANT CONSTRUCTION

R322.1.6 Protection of mechanical, plumbing and electrical systems. Electrical systems, equipment and components; heating, ventilating, air conditioning; plumbing appliances and plumbing fixtures; duct systems; and other service equipment shall be located at or above the elevation required in Section R322.2 or R322.3. If replaced as part of a substantial improvement, electrical systems, equipment and components; heating, ventilating, air conditioning and plumbing appliances and plumbing fixtures; duct systems; and other service equipment shall meet the requirements of this section. Systems, fixtures, and equipment and components shall not be mounted on or penetrate through walls intended to break away under flood loads.

Exception: Locating electrical systems, equipment and components; heating, ventilating, air conditioning; plumbing appliances and plumbing fixtures; duct systems; and other service equipment is permitted below the elevation required in Section R322.2 or R322.3 provided that they are designed and installed to prevent water from entering or accumulating within the components and to resist hydrostatic and hydrodynamic loads and stresses, including the effects of buoyancy, during the occurrence of flooding to the design flood elevation in accordance with ASCE 24. Electrical wiring systems are permitted to be located below the required elevation provided they conform to the provisions of the ~~electrical part of this code for~~ *California Electrical Code* for wet locations.

R322.1.7 Protection of water supply and sanitary sewage systems. ~~New and replacement w~~ *W*ater supply systems shall be designed to minimize or eliminate infiltration of flood waters into the ~~systems in accordance with the plumbing provisions of this code~~ *water supply and distribution system.* ~~New and replacement s~~*S*anitary sewage systems shall be designed to minimize or eliminate infiltration of floodwaters into *sanitary drainage* systems and discharges from *sanitary drainage* systems into floodwaters ~~in accordance with the plumbing provisions of this code and Chapter 3 of the International Private Sewage Disposal Code~~.

R322.1.9 Manufactured homes. ***(NOT ADOPTED IN CA)***

SECTION R324
SOLAR ENERGY SYSTEMS

R324.2 Solar thermal systems. Solar thermal systems shall be designed and installed in accordance with ~~Chapter 23~~ the California Plumbing Code and the ~~International~~ *California* Fire Code.

R324.3 Photovoltaic systems. Photovoltaic systems shall be designed and installed in accordance with Sections R324.3.1 through R324.7.2.5 and ~~NFPA 70~~ *the California Electrical Code*. Inverters shall be listed and labeled in accordance with UL 1741. Systems connected to the utility grid shall use inverters listed for utility interaction.

R324.6.1 Fire separation distances. Ground-mounted photovoltaic systems shall be subject to the fire separation distance requirements determined by the ~~local jurisdiction~~ *enforcing agency*.

R324.7 Access and pathways. Roof access, pathways and spacing requirements shall be provided in accordance with Sections R324.7.1 through R324.7.2.5.

Exceptions:

1. Detached garages and accessory structures to one- and two-family dwellings and townhouses, such as parking shade structures, carports, solar trellises and similar structures.
2. Roof access, pathways and spacing requirements need not be provided where an alternative ventilation method approved by the ~~code official~~ *enforcing agency* has been provided or where the ~~code official~~ *enforcing agency* has determined that vertical ventilation techniques will not be employed.

R324.7.2.5 Allowance for smoke ventilation operations. Panels and modules installed on dwellings shall not be located less than 3 feet (914 mm) below the roof ridge to allow for fire department smoke ventilation operations.

> **Exception:** Where an alternative ventilation method approved by the ~~code official~~ *enforcing agency* has been provided or where the ~~code official~~ *enforcing agency* has determined that vertical ventilation techniques will not be employed, clearance from the roof ridge is not required.

SECTION R334
(formerly R324)
CONSTRUCTION WASTE REDUCTION, DISPOSAL AND RECYCLING

***R334.1* (formerly R324.1) Construction waste management.** *Recycle and/or salvage for reuse a minimum of ~~50~~ 65 percent of the nonhazardous construction and demolition waste in accordance with the California Green Building Standards Code, Chapter 4, Division 4.4.*

SECTION R340
(formerly R330)
POLLUTANT CONTROL

***R340.1* (formerly R330.1) Finish material pollutant control.** *Finish materials including adhesives, sealants, caulks, paints and coatings, aerosol paints and coatings, carpet systems, carpet cushion, carpet adhesive, resilient flooring systems and composite wood products shall meet the volatile organic compound (VOC) emission limits in accordance with the California Green Building Standards Code, Chapter 4, Division 4.5.*

NOTE:
Authority cited: Health and Safety Code Sections 17040, 17050, 17920.9, 17921, 17921.3, 17921.6, 17921.10, 17922, 17922.6, 17922.12, 17927, 17928, 17959.6, 18300, 18552, 18554, 18620, 18630, 18640, 18670, 18690, 18691, 18865, 18871.3, 18871.4, 18873, 18873.1, 18873.2, 18873.3, 18873.4, 18873.5, 18938.3, 18944.11 and 19990; and Government Code Section 12955.1.

Reference: Health and Safety Code Sections 17000 through 17062.5, 17910 through 17995.5, 18200 through 18700, 18860 through 18874 and 19960 through 19997; and Government Code Sections 12955.1 and 12955.1.1.

---

7. HCD proposes to adopt Chapter 4 from the 2015 International Residential Code into the 2016 California Residential Code with amendment as follows:

CHAPTER 4
FOUNDATIONS

SECTION R401
GENERAL

R401.2 Requirements. Foundation construction shall be capable of accommodating all loads according to Section R301 and of transmitting the resulting loads to the supporting soil. Fill soils that support footings and foundations shall be designed, installed and tested in accordance with accepted engineering practice. Gravel fill used as footings for wood and precast concrete foundations shall comply with Section R403.

Note: *See Section R301.1.1.1 for limited-density owner-built rural dwellings.*

R401.4.1.1 General and where required for applications listed in Section 1.8.2.1.1 regulated by the Department of Housing and Community Development. *Foundations and soils investigations shall be conducted in conformance with Health and Safety Code Sections 17953 through 17957 as summarized below.*

R401.4.1.1.1 Preliminary soil report. *Each city, county, or city and county shall enact an ordinance which requires a preliminary soil report, prepared by a civil engineer who is registered by the state. The report shall be based upon adequate test borings or excavations, of every subdivision, where a tentative and final map is required pursuant to Section 66426 of the Government Code.*

The preliminary soil report may be waived if the building department of the city, county or city and county, or other enforcement agency charged with the administration and enforcement of the provisions of Section R401.4.1.1, shall determine that, due to the knowledge such department has as to the soil qualities of the soil of the subdivision or lot, no preliminary analysis is necessary.

R401.4.1.1.2 Soil investigation by lot, necessity, preparation, and recommendations. *If the preliminary soil report indicates the presence of critically expansive soils or other soil problems which, if not corrected, would lead to structural defects, such ordinance shall require a soil investigation of each lot in the subdivision.*

The soil investigation shall be prepared by a civil engineer who is registered in this state. It shall recommend corrective action which is likely to prevent structural damage to each dwelling proposed to be constructed on the expansive soil.

R401.4.1.1.3 Approval, building permit conditions, appeal. *The building department of each city, county or city and county, or other enforcement agency charged with the administration and enforcement of the provisions of this code, shall approve the soil investigation if it determines that the recommended action is likely to prevent structural damage to each dwelling to be constructed. As a condition to the building permit, the ordinance shall require that the approved recommended action be incorporated in the construction of each dwelling. Appeal from such determination shall be to the local appeals board.*

R401.4.1.1.4. Liability. *A city, county, or city and county or other enforcement agency charged with the administration and enforcement of the provisions of Section R401.4.1.1, is not liable for any injury which arises out of any act or omission of the city, county or city and county, or other enforcement agency, or a public employee or any other person under Sections R401.4.1.1.1, R401.4.1.1.2 or R401.4.1.1.3.*

R401.4.1.1.5. Alternate procedures. *The governing body of any city, county, or city and county may enact an ordinance prescribing an alternate procedure which is equal to or more restrictive than the procedures specified in Sections R401.4.1.1.1, R401.4.1.1.2 and R401.1.1.3.*

SECTION R403
FOOTINGS

R403.1.8 Foundations on expansive soils. Foundation and floor slabs for buildings located on expansive soils shall be designed in accordance with Section 1808.6 of the ~~International~~ *California* Building Code.

Exception: ...(no changes to text)

SECTION R404
FOUNDATION AND RETAINING WALLS

R404.5.1 Design. Precast concrete foundation walls shall be designed in accordance with accepted engineering practice. The design and manufacture of precast concrete foundation wall panels shall comply with the materials requirements of Section R402.3 or ACI 318. The panel design drawings shall be prepared by a registered design professional ~~where required by the statutes of the *jurisdiction* in which the project is to be constructed in accordance with Section R106.1~~.

SECTION R408
UNDER-FLOOR SPACE

R408.3 Unvented crawl space. Ventilation openings in under-floor spaces specified in Sections R408.1 and R408.2 shall not be required where the following items are provided:

1. Exposed earth is covered with a continuous Class I vapor retarder. Joints of the vapor retarder shall overlap by 6 inches (152 mm) and shall be sealed or taped. The edges of the vapor retarder shall extend at least 6 inches (152 mm) up the stem wall and shall be attached and sealed to the stem wall or insulation.
2. One of the following is provided for the under-floor space:

   2.1. Continuously operated mechanical exhaust ventilation at a rate equal to 1 cubic foot per minute (0.47 L/s) for each 50 square feet (4.7 m^2) of crawl space floor area, including an air pathway to the common area (such as a duct or transfer grille) ~~and *Crawl space* perimeter walls *shall be* insulated in accordance with Section N1102.2.11 of this code *the minimum insulation requirements established in the California Energy Code. Crawl space insulation shall be permanently fastened to the wall and extend downward from the*~~

~~*floor to the finished grade level and then vertically and/or horizontally for at least an additional 24 inches (610 mm)*~~.

2.2. Conditioned air supply sized to deliver at a rate equal to 1 cubic foot per minute (0.47 L/s) for each 50 square feet (4.7 m^2) of under-floor area, including a return air pathway to the common area (such as a duct or transfer grille)~~, and perimeter walls insulated in accordance with Section N1102.11 of this code.~~ *Crawl space perimeter walls shall be insulated in accordance with the minimum insulation requirements established in the California Energy Code. Crawl space insulation shall be permanently fastened to the wall and extend downward from the floor to the finished grade level and then vertically and/or horizontally for at least an additional 24 inches (610 mm).*

2.3. Plenum in ~~existing~~ structures complying with ~~Section M1601.5~~, *the California Mechanical Code*, if under-floor space is used as a plenum.

R408.4 Access. Access shall be provided to all under-floor spaces. Access openings through the floor shall be a minimum of 18 inches by 24 inches (457 mm by 610 mm). Openings through a perimeter wall shall be not less than 16 inches by 24 inches (407 mm by 610 mm). Where any portion of the through-wall access is below grade, an areaway not less than 16 inches by 24 inches (407 mm by 610 mm) shall be provided. The bottom of the areaway shall be below the threshold of the access opening. Through wall access openings shall not be located under a door to the residence. See ~~Section M1305.1.4~~ *the California Mechanical Code* for access requirements where mechanical equipment is located under floors.

NOTE:
Authority cited: Health and Safety Code Sections 17040, 17050, 17920.9, 17921, 17921.3, 17921.6, 17921.10, 17922, 17922.6, 17922.12, 17927, 17928, 17959.6, 18300, 18552, 18554, 18620, 18630, 18640, 18670, 18690, 18691, 18865, 18871.3, 18871.4, 18873, 18873.1, 18873.2, 18873.3, 18873.4, 18873.5, 18938.3, 18944.11 and 19990; and Government Code Section 12955.1.

Reference: Health and Safety Code Sections 17000 through 17062.5, 17910 through 17995.5, 18200 through 18700, 18860 through 18874 and 19960 through 19997; and Government Code Sections 12955.1 and 12955.1.1.

---

8. HCD proposes to adopt Chapter 5 from the 2015 International Residential Code into the 2016 California Residential Code with amendments as follows:

CHAPTER 5
FLOORS

SECTION R502
WOOD FLOOR FRAMING

R502.1.1 Sawn lumber. Sawn lumber shall be identified by a grade mark of an accredited lumber grading or inspection agency and have design values certified by an accreditation body that complies with DOC PS 20. In lieu of a grade mark, a certificate of inspection issued by a lumber grading or inspection agency meeting the requirements of this section shall be accepted.

Note: *See Section R301.1.1.1 for limited-density owner-built rural dwellings.*

R502.11.1 Design. Wood trusses shall be designed in accordance with approved engineering practice. The design and manufacture of metal plate connected wood trusses shall comply with ANSI/TPI 1. The truss design drawings shall be prepared by a registered *design* professional ~~where required by the statutes of the jurisdiction in which the project is to be constructed in accordance with Section R106.1~~.

SECTION R506
CONCRETE FLOORS (ON GROUND)

R506.2.3.1 Capillary break. *When a vapor retarder is required, a capillary break shall be installed in accordance with the California Green Building Standards Code, Chapter 4, Division 4.5.*

NOTE:
Authority cited: Health and Safety Code Sections 17040, 17050, 17920.9, 17921, 17921.3, 17921.6, 17921.10, 17922, 17922.6, 17922.12, 17927, 17928, 17959.6, 18300, 18552, 18554, 18620, 18630, 18640, 18670, 18690, 18691, 18865, 18871.3, 18871.4, 18873, 18873.1, 18873.2, 18873.3, 18873.4, 18873.5, 18938.3, 18944.11 and 19990; and Government Code Section 12955.1.

Reference: Health and Safety Code Sections 17000 through 17062.5, 17910 through 17995.5, 18200 through 18700, 18860 through 18874 and 19960 through 19997; and Government Code Sections 12955.1 and 12955.1.1.

---

9. HCD proposes to adopt Chapter 6 from the 2015 International Residential Code into the 2016 California Residential Code with amendments as follows:

CHAPTER 6
WALL CONSTRUCTION

SECTION R602
WOOD WALL FRAMING

R602.1.1 Sawn lumber. Sawn lumber shall be identified by a grade mark of an accredited lumber grading or inspection agency and have design values certified by an accreditation body that complies with DOC PS 20. In lieu of a grade mark, a certification of inspection issued by a lumber grading or inspection agency meeting the requirements of this section shall be accepted.

Note: *See Section R301.1.1.1 for limited-density owner-built rural dwellings.*

R602.3.4.1 Rodent proofing. *Annular spaces around pipes, electric cables, conduits or other openings in bottom/sole plates at exterior walls shall be protected against the passage of rodents by closing such openings in accordance with the California Green Building Standards Code, Chapter 4, Division 4.4.*

TABLE R602.10.3(3)
BRACING REQUIREMENTS BASED ON SEISMIC DESIGN CATEGORY

.... (No Changes to Table)

a. Linear interpolation shall be permitted.
b. Wall bracing lengths are based on a soil site class "D." Interpolation of bracing length between the S_{ds} values associated with the Seismic Design Categories shall be permitted when a site-specific S_{ds} value is determined in accordance with Section 1613.3 of the ~~International~~ *California Building Code.*
c. ... (No change to text)
d. ... (No change to text)
e. ... (No change to text)

SECTION R606
GENERAL MASONRY CONSTRUCTION

R606.1.1 Professional registration ~~**not required.** *When the*~~ Empirical design provisions of Appendix A of TMS 402/ACI 530/ASCE 5, the provisions of TMS 403, or the provisions of this section are used to design masonry, project drawings, typical details and specifications ~~are not required to bear the seal of the architect or engineer responsible for design, unless otherwise required by the state law of the jurisdiction having authority.~~ *shall not exempt construction documents from the requirement to be stamped by a California licensed architect or engineer. Notwithstanding other sections of law, the law establishing these provisions is found in Business and Professions Code Sections 5537.1 and 6737.1.*

TABLE R606.12.2.1
MINIMUM SOLID WALL LENGTH ALONG EXTERIOR WALL LINES

.... (No Changes to Table)

NP = Not permitted, except with design in accordance with the ~~International~~ *California* Building Code.

a. For all walls, the minimum required length of solid walls shall be based on the table percent multiplied by the dimension, parallel to the wall direction under consideration, of a rectangle inscribing the overall building plan.

SECTION R608
EXTERIOR CONCRETE WALL CONSTRUCTION

R608.1 General. (formerly R611.1) Exterior concrete walls shall be designed and constructed in accordance with the provisions of this section or in accordance with the provisions of PCA 100 or ACI 318. Where PCA 100, ACI 318 or the provisions of this section are used to design concrete walls, project drawings, typical details and specifications ~~are not required to bear the seal of the architect or engineer responsible for design, unless otherwise required by the state law of the jurisdiction having authority.~~ *shall not exempt construction documents from the requirement to be stamped by a California licensed architect or engineer. Notwithstanding other sections of law, the law establishing these provisions is found in Business and Professions Code Sections 5537.1 and 6737.1.*

SECTION R610
STRUCTURAL INSULATED PANEL WALL CONSTRUCTION

R610.1 (formerly R613.1) General. Structural insulated panel (SIP) walls shall be designed in accordance with the provisions of this section. Where the provisions of this section are used to design structural insulated panel walls, project drawings, typical details and specifications ~~are not required to bear the seal of the architect or engineer responsible for design, unless otherwise required by the state law of the jurisdiction having authority.~~ *shall not exempt construction documents from the requirement to be stamped by a California licensed architect or engineer. Notwithstanding other sections of law, the law establishing these provisions is found in Business and Professions Code Sections 5537.1 and 6737.1.*

R610.4.1 Labeling. Panels shall be identified by grade mark or certificate of inspection issued by an approved agency. Each (SIP) shall bear a stamp or label with the following minimum information:

1. Manufacturer name/logo.

2. Identification of the assembly.

3. Quality assurance agency.

(HCD 1 and HCD 2) Note: *See the California Factory-Built Housing Law, Health and Safety Code Section 19960 et seq.; and the California Code of Regulations, Title 25, Division 1, Chapter 3; which require building components as addressed in the definition of "factory-built housing" to bear insignia of approval issued by the Department of Housing and Community Development, as specified.*

NOTE:
Authority cited: Health and Safety Code Sections 17040, 17050, 17920.9, 17921, 17921.3, 17921.6, 17921.10, 17922, 17922.6, 17922.12, 17927, 17928, 17959.6, 18300, 18552, 18554, 18620, 18630, 18640, 18670, 18690, 18691, 18865, 18871.3, 18871.4, 18873, 18873.1, 18873.2, 18873.3, 18873.4, 18873.5, 18938.3, 18944.11 and 19990; and Government Code Section 12955.1.

Reference: Health and Safety Code Sections 17000 through 17062.5, 17910 through 17995.5, 18200 through 18700, 18860 through 18874 and 19960 through 19997; and Government Code Sections 12955.1 and 12955.1.1.

---

10. HCD proposes to adopt Chapter 7 from the 2015 International Residential Code into the 2016 California Residential Code with amendments as follows:

CHAPTER 7
WALL COVERING

SECTION R702
INTERIOR COVERING

R702.7 Vapor retarders. Class I or II vapor retarders are required on the interior side of frame walls in Climate Zones ~~5, 6, 7, 8 and Marine 4~~ *14 and 16. See ~~Title 24, Part 6~~ the California Energy Code, FIGURE 100.1-A — California Climate Zones.*

Exceptions:

1. Basement walls.
2. Below-grade portion of any wall.
3. Construction where moisture or its freezing will not damage the materials.

R702.7.1 Class III vapor retarders. Class III vapor retarders shall be permitted where any one of ~~the conditions in Table R702.7.1 is met.~~ *the following materials are used. The material options include vented cladding over fiberboard, vented cladding over gypsum, or insulated sheathing with an R value equal to or greater than R-4. If insulated sheathing is used the R-value shall be included as part of the compliance toward ~~Title 24, Part 6 Building Energy Efficiency Standards~~ the California Energy Code.*

Spray foam with a minimum density of 2 lb/ft^3 applied to the interior cavity side of OSB, plywood, fiberboard, insulated sheathing or gypsum is deemed to meet the insulated sheathing requirement where the spray foam R-value meets or exceeds the specified insulated sheathing R-value.

~~**TABLE R702.7.1**~~
~~**CLASS III VAPOR RETARDERS**~~

~~CLIMATE ZONE~~	~~CLASS III VAPOR RETARDERS PERMITTED FOR:[a]~~
~~Marine 4~~	~~Vented cladding over wood structural panels.~~ ~~Vented cladding over fiberboard.~~ ~~Vented cladding over gypsum.~~ ~~Continuous insulation with R-value ≥ 2.5 over 2 x 4 wall.~~ ~~Continuous insulation with R-value ≥ 3.75 over 2 x 6 wall.~~
~~5~~	~~Vented cladding over wood structural panels.~~ ~~Vented cladding over fiberboard.~~ ~~Vented cladding over gypsum.~~ ~~Continuous insulation with R-value ≥ 5 over 2 x 4 wall.~~ ~~Continuous insulation with R-value ≥ 7.5 over 2 x 6 wall.~~
~~6~~	~~Vented cladding over fiberboard~~ ~~Vented cladding over gypsum~~ ~~Continuous insulation with R-value ≥ 7.5 over 2 x 4 wall~~ ~~Continuous insulation with R-value ≥ 11.25 over 2 x 6 wall~~
~~7 and 8~~	~~Continuous insulation with R-value ≥ 10 over 2 x 4 wall~~ ~~Continuous insulation with R-value ≥ 15 over 2 x 6 wall~~

~~For SI: 1 pound per cubic foot = 16 kg/m^3~~

~~a. Spray foam with a maximum permeance of 1.5 perms at the installed thickness, applied to the interior cavity side of wood structural panels, fiberboard, insulating sheathing or gypsum is deemed to meet the continuous insulation requirement where the spray foam *R* value meets or exceeds the specified continuous insulation *R* value.~~

SECTION R703
EXTERIOR COVERING

R703.1.1 Water resistance. The exterior wall envelope shall be designed and constructed in a manner that prevents the accumulation of water within the wall assembly by providing a water-resistant barrier behind the exterior veneer as required by Section R703.2 and a means of draining to the exterior water that enters the assembly. Protection against condensation in the exterior wall assembly shall be provided in accordance with ~~Section R702.7 of this code~~ *the California Energy Code.*

Exceptions: ... (No change to text)

NOTE:
Authority cited: Health and Safety Code Sections 17040, 17050, 17920.9, 17921, 17921.3, 17921.6, 17921.10, 17922, 17922.6, 17922.12, 17927, 17928, 17959.6, 18300, 18552, 18554, 18620, 18630, 18640, 18670, 18690, 18691, 18865, 18871.3, 18871.4, 18873, 18873.1, 18873.2, 18873.3, 18873.4, 18873.5, 18938.3, 18944.11 and 19990; and Government Code Section 12955.1.

Reference: Health and Safety Code Sections 17000 through 17062.5, 17910 through 17995.5, 18200 through 18700, 18860 through 18874 and 19960 through 19997; and Government Code Sections 12955.1 and 12955.1.1.

---

11. HCD proposes to adopt Chapter 8 from the 2015 International Residential Code into the 2016 California Residential Code with amendments as follows:

CHAPTER 8
ROOF-CEILING CONSTRUCTION

SECTION R802
WOOD ROOF FRAMING

R802.1.1 (formerly R802.1) Sawn lumber. Sawn lumber shall be identified by a grade mark of an accredited lumber grading or inspection agency and have design values certified by an accreditation body that complies with DOC PS 20. In lieu of a grade mark, a certificate of inspection issued by a lumber grading or inspection agency meeting the requirements of this section shall be accepted.

Note: *See Section R301.1.1.1 for limited-density owner-built rural dwellings.*

R802.1.5.4 (formerly R802.1.3.4) Labeling. Fire-retardant-treated lumber and wood structural panels shall be labeled. The label shall contain:

1. The identification mark of an approved agency in accordance with Section 1703.5 of the ~~International~~ *California* Building Code.

2. – 8. (No change to text)

R802.10.2 Design. Wood trusses shall be designed in accordance with accepted engineering practice. The design and manufacture of metal-plate-connected wood trusses shall comply with ANSI/TPI 1. The truss design drawings shall be prepared by a registered *design* professional ~~where required by the statutes of the jurisdiction in which the project is to be constructed in accordance with Section R106.1~~.

SECTION R806
ROOF VENTILATION

R806.2 Minimum vent area. The minimum net free ventilation area shall be 1/150 of the area of the vented space.

Exception: The minimum net free ventilation area shall be 1/300 of the vented space provided one or more of the following conditions are met:

1. In Climate Zones ~~6, 7 and 8~~ *14 and 16*, a Class I or II vapor retarder is installed on the warm-in-winter side of the ceiling.

2. (No change to text)

R806.5 Unvented attic and unvented enclosed rafter assemblies. Unvented attics and unvented enclosed roof framing assemblies created by ceilings that are applied directly to the underside of the roof framing members and structural roof sheathing applied directly to the top of the roof framing members/rafters, shall be permitted where all the following conditions are met:

1. The unvented attic space is completely within the building thermal envelope.

2. No interior Class I vapor retarders are installed on the ceiling side (attic floor) of the unvented attic assembly or on the ceiling side of the unvented enclosed roof framing assembly.

3. Where wood shingles or shakes are used, a minimum 1/4-inch (6.4 mm) vented airspace separates the shingles or shakes and the roofing underlayment above the structural sheathing.

4. In Climate Zones ~~5, 6, 7 and 8,~~ *14 and 16,* any air-impermeable insulation shall be a Class II vapor retarder, or shall have a Class II vapor retarder coating or covering in direct contact with the underside of the insulation.

4.1 A Class I or Class II vapor retarder shall be installed on the indirectly conditioned space side of all insulation in an unvented attic with air-permeable insulation, for condensation control.

See ~~Title 24, Part 6~~ the California Energy Code, FIGURE 100.1-A —California Climate Zones.

5. Insulation shall be located in accordance with the following:

5.1. Item 5.1.1, 5.1.2, 5.1.3 or 5.1.4 shall be met, depending on the air permeability of the insulation directly under the structural roof sheathing. *No insulation shall be required when roof tiles, wood shingles or wood shakes, or any other roofing system using battens and no continuous underlayment is installed. A continuous ~~layer~~ underlayment shall be considered to exist if sheathing, roofing paper or any continuous layer ~~which has~~ having a perm rate of no more than one perm under the dry cup method is present.*

5.1.1. Where only air-impermeable insulation is provided, it shall be applied in direct contact with the underside of the structural roof sheathing.

5.1.2. Where air-permeable insulation is provided inside the building thermal envelope, it shall be installed in accordance with Section 5.1. In addition to the air-permeable insulation installed directly below the structural sheathing, rigid board or sheet insulation ~~with an R-value of R-4~~ shall be installed directly above the structural roof sheathing in accordance with the R-values in Table R806.5 for condensation control.

5.1.3. Where both air-impermeable and air-permeable insulation are provided, the air-impermeable insulation shall be applied in direct contact with the underside of the structural roof sheathing ~~in accordance with Item 5.1.1~~ and shall be in accordance with the R-values in Table R806.5 for condensation control. The air-permeable insulation shall be installed directly under the air-impermeable insulation.

5.1.4. Alternatively, sufficient rigid board or sheet insulation shall be installed directly above the structural roof sheathing to maintain the monthly average temperature of the underside of the structural roof sheathing above 45°F (7°C). For calculation purposes, an interior air temperature of 68°F (20°C) is assumed and the exterior air temperature is assumed to be the monthly average outside air temperature of the three coldest months.

5.2. Where preformed insulation board is used as the air-impermeable insulation layer, it shall be sealed at the perimeter of each individual sheet interior surface to form a continuous layer.

TABLE R806.5
INSULATION FOR CONDENSATION CONTROL

CLIMATE ZONE	MINIMUM RIGID BOARD ~~ON~~ *OR* AIR-IMPERMEABLE INSULATION R-VALUE[a, b]
~~2B and 3B~~ *6-15* tile roof only	0 (none required)
~~1, 2A, 2B, 3A, 3B, 3C~~ *3-15*	R-5
~~4C~~ *1&2*	R-10
~~4A, 4B~~ *16*	R-15
~~5~~	~~R-20~~
~~6~~	~~R-25~~
~~7~~	~~R-30~~
~~8~~	~~R-35~~

~~a. Contributes to but does not supersede the requirements in Section N1103.2.1.~~
~~b. Alternatively, sufficient continuous insulation shall be installed directly above the structural roof sheathing to~~

~~maintain the monthly average temperature of the underside of the structural roof sheathing above 45°F (7°C). For calculation purposes, an interior air temperature of 68°F (20°C) is assumed and the exterior air temperature is assumed to be the monthly average outside air temperature of the three coldest months.~~

SECTION R807
ATTIC ACCESS

R807.1 Attic access. Buildings with combustible ceiling or roof construction shall have an attic access opening to attic areas that have a vertical height of 30 inches (762 mm) or greater over an area of not less than 30 square feet (2.8 m^2). The vertical height shall be measured from the top of the ceiling framing members to the underside of the roof framing members.

The rough-framed opening shall be not less than 22 inches by 30 inches (559 mm by 762 mm) and shall be located in a hallway or other readily accessible location. Where located in a wall, the opening shall be not less than 22 inches wide by 30 inches high (559 mm wide by 762 mm high). Where the access is located in a ceiling, minimum unobstructed headroom in the attic space shall be 30 inches (762 mm) at some point above the access measured vertically from the bottom of ceiling framing members. See ~~Section M1305.1.3~~ *the California Mechanical Code* for access requirements where mechanical equipment is located in attics.

NOTE:
Authority cited: Health and Safety Code Sections 17040, 17050, 17920.9, 17921, 17921.3, 17921.6, 17921.10, 17922, 17922.6, 17922.12, 17927, 17928, 17959.6, 18300, 18552, 18554, 18620, 18630, 18640, 18670, 18690, 18691, 18865, 18871.3, 18871.4, 18873, 18873.1, 18873.2, 18873.3, 18873.4, 18873.5, 18938.3, 18944.11 and 19990; and Government Code Section 12955.1.

Reference: Health and Safety Code Sections 17000 through 17062.5, 17910 through 17995.5, 18200 through 18700, 18860 through 18874 and 19960 through 19997; and Government Code Sections 12955.1 and 12955.1.1.

---

12. HCD proposes to adopt Chapter 9 from the 2015 International Residential Code into the 2016 California Residential Code with amendments as follows:

CHAPTER 9
ROOF ASSEMBLIES

SECTION R903
WEATHER PROTECTION

R903.4.1 Secondary (emergency overflow) drains or scuppers. Where roof drains are required, secondary emergency overflow roof drains or scuppers shall be provided where the roof perimeter construction extends above the roof in such a manner that water will be entrapped if the primary drains allow buildup for any reason. Overflow drains having the same size as the roof drains shall be installed with the inlet flow line located 2 inches (51 mm) above the low point of the roof, or overflow scuppers having three times the size of the roof drains and having a minimum opening height of 4 inches (102 mm) shall be installed in the adjacent parapet walls with the inlet flow located 2 inches (51 mm) above the low point of the roof served. The installation and sizing of overflow drains, leaders and conductors shall comply with ~~Sections 1106 and 1108 of~~ the ~~International~~ *California* Plumbing Code~~, as applicable~~.

~~Overflow drains shall discharge to an approved location and shall not be connected to roof drain lines.~~

SECTION R905
REQUIREMENTS FOR ROOF COVERINGS

R905.10.3 Material standards. Metal-sheet roof covering systems that incorporate supporting structural members shall be designed in accordance with the ~~International~~ *California* Building Code. Metal-sheet roof coverings installed over structural decking shall comply with Table R905.10.3(1). The materials used for metal-sheet roof coverings shall be naturally corrosion resistant or provided with corrosion resistance in accordance with the standards and minimum thicknesses shown in Table R905.10.3(2).

R905.16 Photovoltaic shingles. The installation of photovoltaic shingles shall comply with the provisions of this section, Section R324 and ~~NFPA 70~~ *the California Electrical Code*.

SECTION R907
ROOFTOP-MOUNTED PHOTOVOLTAIC SYSTEMS

R907.1 Rooftop-mounted photovoltaic systems. Rooftop mounted photovoltaic panels or modules shall be installed in accordance with this section, Section R324 and ~~NFPA 70~~ *the California Electrical Code*.

SECTION R909
ROOFTOP-MOUNTED
PHOTOVOLTAIC PANEL SYSTEMS

R909.1 General. The installation of photovoltaic panel systems that are mounted on or above the roof covering shall comply with this section, Section R324 and ~~NFPA 70~~ *the California Electrical Code*.

NOTE:
Authority cited: Health and Safety Code Sections 17040, 17050, 17920.9, 17921, 17921.3, 17921.6, 17921.10, 17922, 17922.6, 17922.12, 17927, 17928, 17959.6, 18300, 18552, 18554, 18620, 18630, 18640, 18670, 18690, 18691, 18865, 18871.3, 18871.4, 18873, 18873.1, 18873.2, 18873.3, 18873.4, 18873.5, 18938.3, 18944.11 and 19990; and Government Code Section 12955.1.

Reference: Health and Safety Code Sections 17000 through 17062.5, 17910 through 17995.5, 18200 through 18700, 18860 through 18874 and 19960 through 19997; and Government Code Sections 12955.1 and 12955.1.1.

---

13. HCD proposes to adopt Chapter 10 except Section 1004.4, from the 2015 International Residential Code into the 2016 California Residential Code with amendments as follows:

CHAPTER 10
CHIMNEYS AND FIREPLACES

SECTION R1001
MASONRY FIREPLACES

R1001.3 Seismic reinforcing. Masonry or concrete chimneys in *all structures regulated by this code assigned to* Seismic Design Category *C*, D_0, D_1 or D_2 shall be reinforced. Reinforcing shall conform to the requirements set forth in Table R1001.1 and Section R606.

R1001.4 Seismic anchorage. Masonry or concrete chimneys in *all structures regulated by this code assigned to* Seismic Design Categories *C*, D_0, D_1 or D_2 shall be anchored at each floor, ceiling or roof line more than 6 feet (1829 mm) above grade, except where constructed completely within the exterior walls. Anchorage shall conform to the requirements of Section R1001.4.1.

TABLE R1001.1
SUMMARY OF REQUIREMENTS FOR MASONRY FIREPLACES AND CHIMNEYS

.... (No Changes to Table)

Note: This table provides a summary of major requirements for the construction of masonry chimneys and fireplaces. Letter references are to Figure R1001.1, which shows examples of typical construction. This table does not cover all requirements, nor does it cover all aspects of the indicated requirements. For the actual mandatory requirements of the code, see the indicated section of text.

a. The letters refer to Figure R1001.1.
b. Not required in Seismic Design Category ~~A, B or C~~ *A or B*.

SECTION R1003
MASONRY CHIMNEYS

R1003.3 Seismic reinforcing. Masonry or concrete chimneys shall be constructed, anchored, supported and reinforced as required in this chapter. In *all structures regulated by this code assigned to* Seismic Design Category *C,* D_0, D_1 or D_2 masonry and concrete chimneys shall be reinforced and anchored as detailed in Section R1003.3.1, R1003.3.2 and R1003.4. In Seismic Design Category ~~A, B or C~~ *A or B,* reinforcement and seismic anchorage are not required.

R1003.4 Seismic anchorage. Masonry and concrete chimneys and foundations in *all structures regulated by this code assigned to* Seismic Design Category *C,* D_0, D_1 or D_2 shall be anchored at each floor, ceiling or roof line more than 6 feet (1829 mm) above grade, except where constructed completely within the exterior walls. Anchorage shall conform to the requirements in Section R1003.4.1.

R1003.11.3 Gas appliances. Flue lining systems for gas appliances shall be in accordance with ~~Chapter 24~~ *the California Mechanical Code.*

R1003.14 Flue area (appliance). Chimney flues shall not be smaller in area than that of the area of the connector from the appliance (see Tables R1003.14(1) and R1003.14(2)). The sizing of a chimney flue to which multiple appliance venting systems are connected shall be in accordance with ~~Section M1805.3~~ *the California Mechanical Code.*

SECTION R1004
FACTORY-BUILT FIREPLACES

R1004.1.1 Factory-built wood burning fireplaces. *Factory-built wood burning fireplaces shall be qualified at the U.S. EPA's Voluntary Fireplace Program Phase 2 emissions level and be in accordance with the California Green Building Standards Code, Chapter 4, Division 4.5.*

~~**R1004.4 Unvented gas log heaters.** An unvented gas log heater shall not be installed in a factory-built fireplace unless the fireplace system has been specifically tested, listed and labeled for such use in accordance with UL 127.~~

NOTE:
Authority cited: Health and Safety Code Sections 17040, 17050, 17920.9, 17921, 17921.3, 17921.6, 17921.10, 17922, 17922.6, 17922.12, 17927, 17928, 17959.6, 18300, 18552, 18554, 18620, 18630, 18640, 18670, 18690, 18691, 18865, 18871.3, 18871.4, 18873, 18873.1, 18873.2, 18873.3, 18873.4, 18873.5, 18938.3, 18944.11 and 19990; and Government Code Section 12955.1.

Reference: Health and Safety Code Sections 17000 through 17062.5, 17910 through 17995.5, 18200 through 18700, 18860 through 18874 and 19960 through 19997; and Government Code Sections 12955.1 and 12955.1.1.

---

14. HCD proposes to NOT adopt Part IV, Energy Conservation, which includes Chapter 11, from the 2015 International Residential Code.

Part IV—Energy Conservation
(Note: Part IV is not adopted. See California Energy Code, Title 24, Part 6.)

NOTE:
Authority cited: Health and Safety Code Sections 17040, 17050, 17920.9, 17921, 17921.3, 17921.6, 17921.10, 17922, 17922.6, 17922.12, 17927, 17928, 17959.6, 18300, 18552, 18554, 18620, 18630, 18640, 18670, 18690, 18691, 18865, 18871.3, 18871.4, 18873, 18873.1, 18873.2, 18873.3, 18873.4, 18873.5, 18938.3, 18944.11 and 19990; and Government Code Section 12955.1.

Reference: Health and Safety Code Sections 17000 through 17062.5, 17910 through 17995.5, 18200 through 18700, 18860 through 18874 and 19960 through 19997; and Government Code Sections 12955.1 and 12955.1.1.

---

15. HCD proposes to NOT adopt Part V, Mechanical, which includes Chapters 12 through 23, from the 2015 International Residential Code.

Part V—Mechanical
(Note: Part V is not adopted. See California Mechanical Code, Title 24, Part 4.)

NOTE:
Authority cited: Health and Safety Code Sections 17040, 17050, 17920.9, 17921, 17921.3, 17921.6, 17921.10, 17922, 17922.6, 17922.12, 17927, 17928, 17959.6, 18300, 18552, 18554, 18620, 18630, 18640, 18670, 18690, 18691, 18865, 18871.3, 18871.4, 18873, 18873.1, 18873.2, 18873.3, 18873.4, 18873.5, 18938.3, 18944.11 and 19990; and Government Code Section 12955.1.

Reference: Health and Safety Code Sections 17000 through 17062.5, 17910 through 17995.5, 18200 through 18700, 18860 through 18874 and 19960 through 19997; and Government Code Sections 12955.1 and 12955.1.1.

---

16. HCD proposes to NOT adopt Part VI, Fuel Gas, which includes Chapter 24, from the 2015 International Residential Code.

Part VI—Fuel Gas
(Note: Part VI is not adopted. See California Mechanical Code and California Plumbing Code, Title 24, Parts 4 and 5.)

NOTE:
Authority cited: Health and Safety Code Sections 17040, 17050, 17920.9, 17921, 17921.3, 17921.6, 17921.10, 17922, 17922.6, 17922.12, 17927, 17928, 17959.6, 18300, 18552, 18554, 18620, 18630, 18640, 18670, 18690, 18691, 18865, 18871.3, 18871.4, 18873, 18873.1, 18873.2, 18873.3, 18873.4, 18873.5, 18938.3, 18944.11 and 19990; and Government Code Section 12955.1.

Reference: Health and Safety Code Sections 17000 through 17062.5, 17910 through 17995.5, 18200 through 18700, 18860 through 18874 and 19960 through 19997; and Government Code Sections 12955.1 and 12955.1.1.

---

17. HCD proposes to NOT adopt Part VII, Plumbing, which includes Chapters 25 through 33, from the 2015 International Residential Code.

Part VII—Plumbing
(Note: Part VII is not adopted. See California Plumbing Code, Title 24, Part 5.)

NOTE:
Authority cited: Health and Safety Code Sections 17040, 17050, 17920.9, 17921, 17921.3, 17921.6, 17921.10, 17922, 17922.6, 17922.12, 17927, 17928, 17959.6, 18300, 18552, 18554, 18620, 18630, 18640, 18670, 18690, 18691, 18865, 18871.3, 18871.4, 18873, 18873.1, 18873.2, 18873.3, 18873.4, 18873.5, 18938.3, 18944.11 and 19990; and Government Code Section 12955.1.

Reference: Health and Safety Code Sections 17000 through 17062.5, 17910 through 17995.5, 18200 through 18700, 18860 through 18874 and 19960 through 19997; and Government Code Sections 12955.1 and 12955.1.1.

---

18. HCD proposes to NOT adopt Part VIII, Electrical, which includes Chapters 34 through 43, from the 2015 International Residential Code.

Part VIII—Electrical
(Note: Part VIII is not adopted. See California Electrical Code, Title 24, Part 3.)

NOTE:
Authority cited: Health and Safety Code Sections 17040, 17050, 17920.9, 17921, 17921.3, 17921.6, 17921.10, 17922, 17922.6, 17922.12, 17927, 17928, 17959.6, 18300, 18552, 18554, 18620, 18630, 18640, 18670, 18690, 18691, 18865, 18871.3, 18871.4, 18873, 18873.1, 18873.2, 18873.3, 18873.4, 18873.5, 18938.3, 18944.11 and 19990; and Government Code Section 12955.1.

Reference: Health and Safety Code Sections 17000 through 17062.5, 17910 through 17995.5, 18200 through 18700, 18860 through 18874 and 19960 through 19997; and Government Code Sections 12955.1 and 12955.1.1.

---

19. HCD proposes to adopt Part IX, Chapter 44, from the 2015 International Residential Code into the 2016 California Residential Code with amendments as follows:

Part IX—Referenced Standards

CHAPTER 44
REFERENCED STANDARDS

Notwithstanding California laws and regulations, these referenced standards shall be applicable only to those California Residential Code sections that are adopted.

Part IX—Referenced Standards

ICC International Code Council, Inc.
500 New Jersey Avenue, NW
6th Floor
Washington, DC 20001

Standard reference number	Title	Referenced in code section number
IBC—15 International Building Code®.		~~R101.2, R110.2, R202, R301.1.1, R301.1.3, R301.2.2.1.1, R301.2.2.1.2, R301.2.2.4, R301.3, R308.5, R320.1, R320.1.1, R403.1.8, Table R602.10.3(3), Table R606.12.2.1, R609.2, R802.1.5.4, R905.10.3, N1107.4, G2402.3~~

...

Standard reference number	Title	Referenced in code section number
IPC—15 International Plumbing Code®		~~Table R301.2(1), R903.4.1,~~ G2402.3, ~~P2601.1, Table P2902.3, P2902.5.5~~

....

IPSDC—15 International Private Sewage Disposal Code®		~~R322.1.7~~
ISPSC—15 International Swimming Pool and Spa Code™		R326.1

NOTE:
Authority cited: Health and Safety Code Sections 17040, 17050, 17920.9, 17921, 17921.3, 17921.6, 17921.10, 17922, 17922.6, 17922.12, 17927, 17928, 17959.6, 18300, 18552, 18554, 18620, 18630, 18640, 18670, 18690,

18691, 18865, 18871.3, 18871.4, 18873, 18873.1, 18873.2, 18873.3, 18873.4, 18873.5, 18938.3, 18944.11 and 19990; and Government Code Section 12955.1.

Reference: Health and Safety Code Sections 17000 through 17062.5, 17910 through 17995.5, 18200 through 18700, 18860 through 18874 and 19960 through 19997; and Government Code Sections 12955.1 and 12955.1.1.

---

20. HCD proposes to NOT adopt Appendix A from the 2015 International Residential Code.

APPENDIX A
SIZING AND CAPACITIES OF GAS PIPING

(This appendix is informative and is not part of the *code*. This appendix is an excerpt from the 2015 *International Fuel Gas Code*, coordinated with the section numbering of the *International Residential Code*.)

The provisions contained in this appendix are not mandatory unless specifically referenced in the adopting ordinance.

NOTE:
Authority cited: Health and Safety Code Sections 17040, 17050, 17920.9, 17921, 17921.3, 17921.6, 17921.10, 17922, 17922.6, 17922.12, 17927, 17928, 17959.6, 18300, 18552, 18554, 18620, 18630, 18640, 18670, 18690, 18691, 18865, 18871.3, 18871.4, 18873, 18873.1, 18873.2, 18873.3, 18873.4, 18873.5, 18938.3, 18944.11 and 19990; and Government Code Section 12955.1.

Reference: Health and Safety Code Sections 17000 through 17062.5, 17910 through 17995.5, 18200 through 18700, 18860 through 18874 and 19960 through 19997; and Government Code Sections 12955.1 and 12955.1.1.

---

21. HCD proposes to NOT adopt Appendix B from the 2015 International Residential Code.

APPENDIX B

SIZING OF VENTING SYSTEMS SERVING APPLIANCES EQUIPPED WITH DRAFT HOODS, CATEGORY I APPLIANCES, AND APPLIANCES LISTED FOR USE WITH TYPE B VENTS

(This appendix is informative and is not part of the *code*. This appendix is an excerpt from the 2015 *International Fuel Gas Code*, coordinated with the section numbering of the *International Residential Code*.)

The provisions contained in this appendix are not mandatory unless specifically referenced in the adopting ordinance.

NOTE:
Authority cited: Health and Safety Code Sections 17040, 17050, 17920.9, 17921, 17921.3, 17921.6, 17921.10, 17922, 17922.6, 17922.12, 17927, 17928, 17959.6, 18300, 18552, 18554, 18620, 18630, 18640, 18670, 18690, 18691, 18865, 18871.3, 18871.4, 18873, 18873.1, 18873.2, 18873.3, 18873.4, 18873.5, 18938.3, 18944.11 and 19990; and Government Code Section 12955.1.

Reference: Health and Safety Code Sections 17000 through 17062.5, 17910 through 17995.5, 18200 through 18700, 18860 through 18874 and 19960 through 19997; and Government Code Sections 12955.1 and 12955.1.1.

---

22. HCD proposes to NOT adopt Appendix C from the 2015 International Residential Code.

APPENDIX C
EXIT TERMINALS OF MECHANICAL DRAFT AND DIRECT-VENT VENTING SYSTEMS

(This appendix is informative and is not part of the code. This appendix is an excerpt from the 2015 *International Fuel Gas Code*, coordinated with the section numbering of the *International Residential Code*.)

The provisions contained in this appendix are not mandatory unless specifically referenced in the adopting ordinance.

NOTE:
Authority cited: Health and Safety Code Sections 17040, 17050, 17920.9, 17921, 17921.3, 17921.6, 17921.10, 17922, 17922.6, 17922.12, 17927, 17928, 17959.6, 18300, 18552, 18554, 18620, 18630, 18640, 18670, 18690, 18691, 18865, 18871.3, 18871.4, 18873, 18873.1, 18873.2, 18873.3, 18873.4, 18873.5, 18938.3, 18944.11 and 19990; and Government Code Section 12955.1.

Reference: Health and Safety Code Sections 17000 through 17062.5, 17910 through 17995.5, 18200 through 18700, 18860 through 18874 and 19960 through 19997; and Government Code Sections 12955.1 and 12955.1.1.

---

23. HCD proposes to NOT adopt Appendix D from the 2015 International Residential Code.

APPENDIX D
RECOMMENDED PROCEDURE FOR SAFETY INSPECTION OF AN EXISTING APPLIANCE INSTALLATION

(This appendix is informative and is not part of the code. This appendix is an excerpt from the 2015 International Fuel Gas Code, coordinated with the section numbering of the International Residential Code.)

The provisions contained in this appendix are not mandatory unless specifically referenced in the adopting ordinance.

NOTE:
Authority cited: Health and Safety Code Sections 17040, 17050, 17920.9, 17921, 17921.3, 17921.6, 17921.10, 17922, 17922.6, 17922.12, 17927, 17928, 17959.6, 18300, 18552, 18554, 18620, 18630, 18640, 18670, 18690, 18691, 18865, 18871.3, 18871.4, 18873, 18873.1, 18873.2, 18873.3, 18873.4, 18873.5, 18938.3, 18944.11 and 19990; and Government Code Section 12955.1.

Reference: Health and Safety Code Sections 17000 through 17062.5, 17910 through 17995.5, 18200 through 18700, 18860 through 18874 and 19960 through 19997; and Government Code Sections 12955.1 and 12955.1.1.

---

24. HCD proposes to NOT adopt Appendix E from the 2015 International Residential Code.

APPENDIX E
MANUFACTURED HOUSING USED AS DWELLINGS

(Note: This appendix is not adopted. See California Code of Regulations, Title 25, Chapters 2 and 3.)

NOTE:
Authority cited: Health and Safety Code Sections 17040, 17050, 17920.9, 17921, 17921.3, 17921.6, 17921.10, 17922, 17922.6, 17922.12, 17927, 17928, 17959.6, 18300, 18552, 18554, 18620, 18630, 18640, 18670, 18690, 18691, 18865, 18871.3, 18871.4, 18873, 18873.1, 18873.2, 18873.3, 18873.4, 18873.5, 18938.3, 18944.11 and 19990; and Government Code Section 12955.1.

Reference: Health and Safety Code Sections 17000 through 17062.5, 17910 through 17995.5, 18200 through 18700, 18860 through 18874 and 19960 through 19997; and Government Code Sections 12955.1 and 12955.1.1.

25. HCD proposes to NOT adopt Appendix F from the 2015 International Residential Code.

APPENDIX F
PASSIVE RADON GAS CONTROLS

(The provisions contained in this appendix are not mandatory unless specifically referenced in the adopting ordinance.)

NOTE:
Authority cited: Health and Safety Code Sections 17040, 17050, 17920.9, 17921, 17921.3, 17921.6, 17921.10, 17922, 17922.6, 17922.12, 17927, 17928, 17959.6, 18300, 18552, 18554, 18620, 18630, 18640, 18670, 18690, 18691, 18865, 18871.3, 18871.4, 18873, 18873.1, 18873.2, 18873.3, 18873.4, 18873.5, 18938.3, 18944.11 and 19990; and Government Code Section 12955.1.

Reference: Health and Safety Code Sections 17000 through 17062.5, 17910 through 17995.5, 18200 through 18700, 18860 through 18874 and 19960 through 19997; and Government Code Sections 12955.1 and 12955.1.1.

26. HCD proposes to NOT adopt Appendix G from the 2015 International Residential Code.

APPENDIX G
PIPING STANDARDS FOR VARIOUS APPLICATIONS

The provisions contained in this appendix are not mandatory unless specifically referenced in the adopting ordinance.

NOTE:
Authority cited: Health and Safety Code Sections 17040, 17050, 17920.9, 17921, 17921.3, 17921.6, 17921.10, 17922, 17922.6, 17922.12, 17927, 17928, 17959.6, 18300, 18552, 18554, 18620, 18630, 18640, 18670, 18690, 18691, 18865, 18871.3, 18871.4, 18873, 18873.1, 18873.2, 18873.3, 18873.4, 18873.5, 18938.3, 18944.11 and 19990; and Government Code Section 12955.1.

Reference: Health and Safety Code Sections 17000 through 17062.5, 17910 through 17995.5, 18200 through 18700, 18860 through 18874 and 19960 through 19997; and Government Code Sections 12955.1 and 12955.1.1.

27. HCD proposes to adopt Appendix H from the 2015 International Residential Code into the 2016 California Residential Code without amendment.

APPENDIX H
PATIO COVERS

(The provisions contained in this appendix are not mandatory unless specifically referenced in the adopting ordinance.)

NOTE:
Authority cited: Health and Safety Code Sections 17040, 17050, 17920.9, 17921, 17921.3, 17921.6, 17921.10, 17922, 17922.6, 17922.12, 17927, 17928, 17959.6, 18300, 18552, 18554, 18620, 18630, 18640, 18670, 18690,

18691, 18865, 18871.3, 18871.4, 18873, 18873.1, 18873.2, 18873.3, 18873.4, 18873.5, 18938.3, 18944.11 and 19990; and Government Code Section 12955.1.

Reference: Health and Safety Code Sections 17000 through 17062.5, 17910 through 17995.5, 18200 through 18700, 18860 through 18874 and 19960 through 19997; and Government Code Sections 12955.1 and 12955.1.1.

---

28. HCD proposes to NOT adopt Appendix I from the 2015 International Residential Code.

APPENDIX I
PRIVATE SEWAGE DISPOSAL

(The provisions contained in this appendix are not mandatory unless specifically referenced in the adopting ordinance.)

NOTE:
Authority cited: Health and Safety Code Sections 17040, 17050, 17920.9, 17921, 17921.3, 17921.6, 17921.10, 17922, 17922.6, 17922.12, 17927, 17928, 17959.6, 18300, 18552, 18554, 18620, 18630, 18640, 18670, 18690, 18691, 18865, 18871.3, 18871.4, 18873, 18873.1, 18873.2, 18873.3, 18873.4, 18873.5, 18938.3, 18944.11 and 19990; and Government Code Section 12955.1.

Reference: Health and Safety Code Sections 17000 through 17062.5, 17910 through 17995.5, 18200 through 18700, 18860 through 18874 and 19960 through 19997; and Government Code Sections 12955.1 and 12955.1.1.

---

29. HCD proposes to NOT adopt Appendix J from the 2015 International Residential Code.

APPENDIX J
EXISTING BUILDINGS AND STRUCTURES

(The provisions contained in this appendix are not mandatory unless specifically referenced in the adopting ordinance.)

NOTE:
Authority cited: Health and Safety Code Sections 17040, 17050, 17920.9, 17921, 17921.3, 17921.6, 17921.10, 17922, 17922.6, 17922.12, 17927, 17928, 17959.6, 18300, 18552, 18554, 18620, 18630, 18640, 18670, 18690, 18691, 18865, 18871.3, 18871.4, 18873, 18873.1, 18873.2, 18873.3, 18873.4, 18873.5, 18938.3, 18944.11 and 19990; and Government Code Section 12955.1.

Reference: Health and Safety Code Sections 17000 through 17062.5, 17910 through 17995.5, 18200 through 18700, 18860 through 18874 and 19960 through 19997; and Government Code Sections 12955.1 and 12955.1.1.

---

30. HCD proposes to NOT adopt Appendix K from the 2015 International Residential Code. *(See Informative Note Below)*

Informative Note
HCD proposes to bring forward the note from the 2013 California Residential Code into the 2016 California Residential Code which references the California Building Code for requirements applicable to structures built to the California Residential Code.

APPENDIX K
SOUND TRANSMISSION

(Note: See Section 1207 "Sound Transmission" of the California Building Code, Title 24, Part 2, for requirements applicable to structures in this code.)

NOTE:
Authority cited: Health and Safety Code Sections 17040, 17050, 17920.9, 17921, 17921.3, 17921.6, 17921.10, 17922, 17922.6, 17922.12, 17927, 17928, 17959.6, 18300, 18552, 18554, 18620, 18630, 18640, 18670, 18690, 18691, 18865, 18871.3, 18871.4, 18873, 18873.1, 18873.2, 18873.3, 18873.4, 18873.5, 18938.3, 18944.11 and 19990; and Government Code Section 12955.1.

Reference: Health and Safety Code Sections 17000 through 17062.5, 17910 through 17995.5, 18200 through 18700, 18860 through 18874 and 19960 through 19997; and Government Code Sections 12955.1 and 12955.1.1.

---

31. HCD proposes to NOT adopt Appendix L from the 2015 International Residential Code.

APPENDIX L
PERMIT FEES

NOTE:
Authority cited: Health and Safety Code Sections 17040, 17050, 17920.9, 17921, 17921.3, 17921.6, 17921.10, 17922, 17922.6, 17922.12, 17927, 17928, 17959.6, 18300, 18552, 18554, 18620, 18630, 18640, 18670, 18690, 18691, 18865, 18871.3, 18871.4, 18873, 18873.1, 18873.2, 18873.3, 18873.4, 18873.5, 18938.3, 18944.11 and 19990; and Government Code Section 12955.1.

Reference: Health and Safety Code Sections 17000 through 17062.5, 17910 through 17995.5, 18200 through 18700, 18860 through 18874 and 19960 through 19997; and Government Code Sections 12955.1 and 12955.1.1.

---

32. HCD proposes to NOT adopt Appendix M from the 2015 International Residential Code.

APPENDIX M
HOME DAY CARE— R-3 OCCUPANCY

NOTE:
Authority cited: Health and Safety Code Sections 17040, 17050, 17920.9, 17921, 17921.3, 17921.6, 17921.10, 17922, 17922.6, 17922.12, 17927, 17928, 17959.6, 18300, 18552, 18554, 18620, 18630, 18640, 18670, 18690, 18691, 18865, 18871.3, 18871.4, 18873, 18873.1, 18873.2, 18873.3, 18873.4, 18873.5, 18938.3, 18944.11 and 19990; and Government Code Section 12955.1.

Reference: Health and Safety Code Sections 17000 through 17062.5, 17910 through 17995.5, 18200 through 18700, 18860 through 18874 and 19960 through 19997; and Government Code Sections 12955.1 and 12955.1.1.

---

33. HCD proposes to NOT adopt Appendix N from the 2015 International Residential Code.

APPENDIX N
VENTING METHODS

(This appendix is informative and is not part of the code. This appendix provides examples of various of venting methods.)

NOTE:
Authority cited: Health and Safety Code Sections 17040, 17050, 17920.9, 17921, 17921.3, 17921.6, 17921.10, 17922, 17922.6, 17922.12, 17927, 17928, 17959.6, 18300, 18552, 18554, 18620, 18630, 18640, 18670, 18690, 18691, 18865, 18871.3, 18871.4, 18873, 18873.1, 18873.2, 18873.3, 18873.4, 18873.5, 18938.3, 18944.11 and 19990; and Government Code Section 12955.1.

Reference: Health and Safety Code Sections 17000 through 17062.5, 17910 through 17995.5, 18200 through 18700, 18860 through 18874 and 19960 through 19997; and Government Code Sections 12955.1 and 12955.1.1.

---

34. HCD proposes to NOT adopt Appendix O from the 2015 International Residential Code.

APPENDIX O
AUTOMATIC VEHICULAR GATES

NOTE:
Authority cited: Health and Safety Code Sections 17040, 17050, 17920.9, 17921, 17921.3, 17921.6, 17921.10, 17922, 17922.6, 17922.12, 17927, 17928, 17959.6, 18300, 18552, 18554, 18620, 18630, 18640, 18670, 18690, 18691, 18865, 18871.3, 18871.4, 18873, 18873.1, 18873.2, 18873.3, 18873.4, 18873.5, 18938.3, 18944.11 and 19990; and Government Code Section 12955.1.

Reference: Health and Safety Code Sections 17000 through 17062.5, 17910 through 17995.5, 18200 through 18700, 18860 through 18874 and 19960 through 19997; and Government Code Sections 12955.1 and 12955.1.1.

---

35. HCD proposes to NOT adopt Appendix P from the 2015 International Residential Code.

APPENDIX P
SIZING OF WATER PIPING SYSTEM

NOTE:
Authority cited: Health and Safety Code Sections 17040, 17050, 17920.9, 17921, 17921.3, 17921.6, 17921.10, 17922, 17922.6, 17922.12, 17927, 17928, 17959.6, 18300, 18552, 18554, 18620, 18630, 18640, 18670, 18690, 18691, 18865, 18871.3, 18871.4, 18873, 18873.1, 18873.2, 18873.3, 18873.4, 18873.5, 18938.3, 18944.11 and 19990; and Government Code Section 12955.1.

Reference: Health and Safety Code Sections 17000 through 17062.5, 17910 through 17995.5, 18200 through 18700, 18860 through 18874 and 19960 through 19997; and Government Code Sections 12955.1 and 12955.1.1.

---

36. HCD proposes to NOT adopt Appendix Q from the 2015 International Residential Code.

APPENDIX Q
RESERVED

NOTE:
Authority cited: Health and Safety Code Sections 17040, 17050, 17920.9, 17921, 17921.3, 17921.6, 17921.10, 17922, 17922.6, 17922.12, 17927, 17928, 17959.6, 18300, 18552, 18554, 18620, 18630, 18640, 18670, 18690, 18691, 18865, 18871.3, 18871.4, 18873, 18873.1, 18873.2, 18873.3, 18873.4, 18873.5, 18938.3, 18944.11 and 19990; and Government Code Section 12955.1.

Reference: Health and Safety Code Sections 17000 through 17062.5, 17910 through 17995.5, 18200 through 18700, 18860 through 18874 and 19960 through 19997; and Government Code Sections 12955.1 and 12955.1.1.

---

37. HCD proposes to NOT adopt Appendix R from the 2015 International Residential Code.

APPENDIX R
LIGHT STRAW-CLAY CONSTRUCTION

NOTE:
Authority cited: Health and Safety Code Sections 17040, 17050, 17920.9, 17921, 17921.3, 17921.6, 17921.10, 17922, 17922.6, 17922.12, 17927, 17928, 17959.6, 18300, 18552, 18554, 18620, 18630, 18640, 18670, 18690, 18691, 18865, 18871.3, 18871.4, 18873, 18873.1, 18873.2, 18873.3, 18873.4, 18873.5, 18938.3, 18944.11 and 19990; and Government Code Section 12955.1.

Reference: Health and Safety Code Sections 17000 through 17062.5, 17910 through 17995.5, 18200 through 18700, 18860 through 18874 and 19960 through 19997; and Government Code Sections 12955.1 and 12955.1.1.

---

38. HCD proposes to adopt Appendix S from the 2015 International Residential Code into the 2016 California Residential Code with amendments as follows:

APPENDIX S
STRAWBALE CONSTRUCTION

SECTION AS102
DEFINITIONS

AS102.1 Definitions. The following words and terms shall, for the purposes of this appendix, have the meanings shown herein. Refer to Chapter 2 of the ~~International~~ *California* Residential Code for general definitions.

SECTION AS104
FINISHES

AS104.2 Purpose, and where required. Strawbale walls shall be finished so as to provide mechanical protection, fire resistance and protection from weather and to restrict the passage of air through the bales, in accordance with this appendix and this code. Vertical strawbale wall surfaces shall receive a coat of plaster not less than 3/8 inch (10 mm) thick, or greater where required elsewhere in this appendix, or shall fit tightly against a solid wall panel. The tops of strawbale walls shall receive a coat of plaster not less than 3/8 inch (10 mm) thick where straw would otherwise be exposed.

Exception: Truth windows shall be permitted where a fire-resistance rating is not required. Weather-exposed truth windows shall be fitted with a weather-tight cover. Interior truth windows in Climate Zones ~~5, 6, 7, 8 and Marine 4~~ *14 and 16* shall be fitted with an air-tight cover.

SECTION AS105
STRAWBALE WALLS—GENERAL

AS105.6.2 Vapor retarders. Wall finishes shall have an equivalent vapor permeance rating of a Class III vapor retarder on the interior side of exterior strawbale walls in Climate Zones ~~5, 6, 7, 8 and Marine 4~~ *14 and 16*, as ~~defined in Chapter 11~~ *as referenced in the California Energy Code*. Bales in walls enclosing showers or steam rooms shall be protected on the interior side by a Class I or Class II vapor retarder.

AS105.6.3 Penetrations in exterior strawbale walls. Penetrations in exterior strawbale walls shall be sealed with an approved sealant or gasket on the exterior side of the wall in all climate zones, and on the interior side of the wall in Climate Zones ~~5, 6, 7, 8 and Marine 4~~ *14 and 16*, as ~~defined in Chapter 11~~ *as referenced in the California Energy Code*.

SECTION AS106
STRAWBALE WALLS—STRUCTURAL

AS106.2 Loads and other limitations. Live and dead loads and other limitations shall be in accordance with Section R301 of the ~~International~~ *California* Residential Code. Strawbale wall dead loads shall not exceed 60 psf (2872 N/m2) per face area of wall.

AS106.13 Braced panels. Plastered strawbale walls shall be permitted to be used as braced wall panels for one-story buildings in accordance with Section R602.10 of the ~~International~~ *California* Residential Code, and with Tables AS106.13(1), AS106.13(2) and AS106.13(3). Wind design criteria shall be in accordance with Section R301.2.1. Seismic design criteria shall be in accordance with Section R301.2.2.

TABLE AS106.13(1)
PLASTERED STRAWBALE BRACED WALL PANEL TYPES
(No change to table)

a. Plasters shall conform with Sections AS104.4.3 through AS104.4.8, AS106.7, AS106.8 and AS106.12.
b. Sill plates shall be Douglas fir-larch or southern pine and shall be preservative treated where required by the ~~International~~ *California* Residential Code.
c. Anchor bolts shall be in accordance with Section AS106.13.3 at the spacing shown in this table.
d. Installed in accordance with Section AS106.9.
e. Staples shall be in accordance with Section AS106.9.2 at the spacing shown in this table.

SECTION AS107
FIRE RESISTANCE

AS107.1 Fire-resistance rating. Strawbale walls shall be considered to be nonrated, except for walls constructed in accordance with Section AS107.1.1 or AS107.1.2. Alternately, fire-resistance ratings of strawbale walls shall be determined in accordance with Section R302 of the ~~International~~ *California* Residential Code.

AS107.2 Openings in rated walls. Openings and penetrations in bale walls required to have a fire-resistance rating shall satisfy the same requirements for openings and penetrations as prescribed in the ~~International~~ *California* Residential Code.

Authority cited: Health and Safety Code Sections 17040, 17050, 17920.9, 17921, 17921.3, 17921.6, 17921.10, 17922, 17922.6, 17922.12, 17927, 17928, 17959.6, 18300, 18552, 18554, 18620, 18630, 18640, 18670, 18690, 18691, 18865, 18871.3, 18871.4, 18873, 18873.1, 18873.2, 18873.3, 18873.4, 18873.5, 18938.3, 18944.11 and 19990; and Government Code Section 12955.1.

Reference: Health and Safety Code Sections 17000 through 17062.5, 17910 through 17995.5, 18200 through 18700, 18860 through 18874 and 19960 through 19997; and Government Code Sections 12955.1 and 12955.1.1.

39. HCD proposes to NOT adopt Appendix T from the 2015 International Residential Code.

APPENDIX T
RECOMMENDED PROCEDURE FOR WORST-CASE TESTING OF ATMOSPHERIC VENTING SYSTEMS UNDER N1102.4 OR N1105 CONDITION ≤ 5ACH$_{50}$

NOTE: The provisions contained in this appendix are not mandatory unless specifically referenced in the adopting ordinance.

Authority cited: Health and Safety Code Sections 17040, 17050, 17920.9, 17921, 17921.3, 17921.6, 17921.10, 17922, 17922.6, 17922.12, 17927, 17928, 17959.6, 18300, 18552, 18554, 18620, 18630, 18640, 18670, 18690, 18691, 18865, 18871.3, 18871.4, 18873, 18873.1, 18873.2, 18873.3, 18873.4, 18873.5, 18938.3, 18944.11 and 19990; and Government Code Section 12955.1.

Reference: Health and Safety Code Sections 17000 through 17062.5, 17910 through 17995.5, 18200 through 18700, 18860 through 18874 and 19960 through 19997; and Government Code Sections 12955.1 and 12955.1.1.

---

40. HCD proposes to NOT adopt Appendix U from the 2015 International Residential Code.

APPENDIX U
SOLAR-READY PROVISIONS-DETACHED ONE- AND TWO-FAMILY DWELLINGS, MULTIPLE SINGLE-FAMILY DWELLINGS (TOWNHOUSES)

NOTE: The provisions contained in this appendix are not mandatory unless specifically referenced in the adopting ordinance.

Authority cited: Health and Safety Code Sections 17040, 17050, 17920.9, 17921, 17921.3, 17921.6, 17921.10, 17922, 17922.6, 17922.12, 17927, 17928, 17959.6, 18300, 18552, 18554, 18620, 18630, 18640, 18670, 18690, 18691, 18865, 18871.3, 18871.4, 18873, 18873.1, 18873.2, 18873.3, 18873.4, 18873.5, 18938.3, 18944.11 and 19990; and Government Code Section 12955.1.

Reference: Health and Safety Code Sections 17000 through 17062.5, 17910 through 17995.5, 18200 through 18700, 18860 through 18874 and 19960 through 19997; and Government Code Sections 12955.1 and 12955.1.1.

FINAL EXPRESS TERMS
FOR
PROPOSED BUILDING STANDARDS
OF THE
OFFICE OF THE STATE FIRE MARSHAL

REGARDING PROPOSED CHANGES TO
2016 CALIFORNIA RESIDENTIAL CODE
CALIFORNIA CODE OF REGULATIONS, TITLE 24, PART 2.5

LEGEND FOR EXPRESS TERMS

1. Existing California amendments or code language being modified are in italics when they appear in the model code text: All such language appears in *italics*, modified language is underlined.
2. New California amendments: All such language appears *underlined and in italics*.
3. Repealed text: All such language appears in ~~strikeout~~.

The Office of the State Fire Marshal (SFM) proposes to adopt the 2015 edition of the International Residential Code (IBC) into the 2016 edition of the California Residential Code (CBC). SFM further proposes to:

- Repeal the adoption by reference of the 2012 International Residential Code and incorporate and adopt by reference in its place the 2015 International Residential Code for application and effectiveness in the 2016 California Residential Code.
- Repeal certain amendments to the 2012 International Building Code and/or California Residential Standards not addressed by the model code that are no longer necessary.
- Adopt new building standards or necessary amendments to the 2015 International Residential Code that address inadequacies of the 2015 International Residential Code as they pertain to California laws.
- Bring forward previously existing California building standards or amendments, which represent no change in their effect from the 2013 California Residential Code.
- Codify non-substantive editorial and formatting amendments from the format based upon the 2012 International Residential Code to the format of the 2015 International Residential Code.

NOTE OF EXPLANATION:

For the **2015 Triennial Code Adoption Cycle**, the Express Terms are displayed as follows:

****PART 1**** Includes the California Amendments SFM proposes to bring forward from the 2013 California Residential Code **with changes** as shown, and also identifies the model code standards from the 2015 International Residential Code SFM proposes for adoption into the 2016 California Residential Code.

****PART 2**** Displays the standards SFM proposes to bring forward from the 2013 California Residential Code **without change**, except for nonsubstantive editorial corrections, for adoption into the 2016 California Residential Code; the text is provided for context and the convenience of the code user.

SUMMARY OF REGULATORY ACTION

SFM PROPOSES TO:

****PART 1****

1. Bring forward existing California Amendments from the 2013 California Residential Code for adoption into the 2016 California Residential Code **with amendment**.
2. Adopt standards from the 2015 International Residential Code into the 2016 California Residential Code **without amendment**.
3. Adopt standards from the 2015 International Residential Code into the 2016 California Residential Code **with amendment**.
4. Repeal 2013 California Amendments, which are **not** brought forward into the 2016 Residential Code.

****PART 2****

1. Bring forward existing California Amendments from the 2013 California Residential Code for adoption into the 2016 California Residential Code **without amendment**, except for editorial corrections.

PART 1

[1. The SFM is proposing to maintain the adoption of those existing California provisions contained Sections 1.1 Through 1.1.12 and Sections 1.11 through 1.11.10 with modification.]
(See item 13 for existing SFM amendments and California regulations that are brought forward without modification.)

Part I — Administrative

CHAPTER 1

SCOPE AND APPLICATION
DIVISION I
CALIFORNIA ADMINISTRATION

1.1.1 Title. *These regulations shall be known as the California Residential Code, may be cited as such and will be referred to herein as "this code." The California Residential Code is Part 2.5 of ~~twelve~~thirteen parts of the official compilation and publication of the adoption, amendment and repeal of building regulations to the California Code of Regulations, Title 24, also referred to as the California Building Standards Code. This part incorporates by adoption the ~~2012~~2015 International Residential Code of the International Code Council with necessary California amendments.*

Notation:
Authority: Health and Safety Code Sections 1250, 1569.72, 1569.78, 1568.02, 1502, 1597.44, 1597.45, 1597.46, 1597.54, 1597.65, 13108, 13108.5, 13114, 13143, 13143.2, 13143.6, 13146, 17921, 18949.2, Government Code Section 51189
References: Health and Safety Code Sections 13143, 18949.2, Government Code Sections 51176, 51177, 51178, 51179, Public Resources Code Sections 4201 through 4204

[2. The SFM proposes to only adopt Sections R104.2 – R104.4, R104.9 – R104.9.1, R105.1, R105.2.1 - R105.2.2, R105.3 - R105.3.1, R105.4, R105.6, R105.7, R106 – R106.5, R107 – R107.4, R109.1, R109.1.4 - R109.1.6, R109.2 - R109.4, R110 – R110.5, R111 – R111.3, R113 – R113.2 and R114 – R114.3 contained in Chapter 1.]
(IRC Chapter 1 Administrative provisions - Sections R101 through R114 relocated to Division II of Chapter 1.)
(See item 13 for existing SFM amendments and California regulations that are brought forward without modification.)

CHAPTER 1
DIVISION II

Division II is not adopted by the Department of Housing and Community Development or the State Fire Marshal except where specifically indicated.

Notation:

Authority: Health and Safety Code Sections 13108, 13143, 17921, 18949.2
References: Health and Safety Code Sections 13143, 18949.2

[3. The SFM proposes to only adopt Sections R201 – R201.4 and specific definitions shown below contained in Chapter 2.]

(See item 13 for existing SFM amendments and California regulations that are brought forward without modification.)

CHAPTER 2
DEFINITIONS

~~***CONGREGATE LIVING HEALTH FACILITY (CLHF),*** *A residential home with a capacity of no more than six beds, which provides inpatient care, including the following basic services: medical supervision, 24-hour skilled nursing and supportive care, pharmacy, dietary, social recreational, and at least provides services for persons who are diagnosed with a terminal illness or who are catastrophically and severely disabled.*~~

Congregate living health facility (CLHF). *means a residential home with a capacity, except as provided in paragraph (3), of no more than 12 beds, that provides inpatient care, including the following basic services: medical supervision, 24-hour skilled nursing and supportive care, pharmacy, dietary, social, recreational, and at least one type of service specified in paragraph (1). The primary need of congregate living health facility residents shall be for availability of skilled nursing care on a recurring, intermittent, extended, or continuous basis. This care is generally less intense than that provided in general acute care hospitals but more intense than that provided in skilled nursing facilities.*

(1) Congregate living health facilities shall provide one of the following services:
(A) Services for persons who are mentally alert, persons with physical disabilities, who may be ventilator dependent.
(B) Services for persons who have a diagnosis of terminal illness, a diagnosis of a life-threatening illness, or both. Terminal illness means the individual has a life expectancy of six months or less as stated in writing by his or her attending physician and surgeon. A "life-threatening illness" means the individual has an illness that can lead to a possibility of a termination of life within five years or less as stated in writing by his or her attending physician and surgeon.
(C) Services for persons who are catastrophically and severely disabled. A person who is catastrophically and severely disabled means a person whose origin of disability was acquired through trauma or nondegenerative neurologic illness, for whom it has been determined that active rehabilitation would be beneficial and to whom these services are being provided. Services offered by a congregate living health facility to a person who is catastrophically disabled shall include, but not be limited to, speech, physical, and occupational therapy.

(2) A congregate living health facility license shall specify which of the types of persons described in paragraph (1) to whom a facility is licensed to provide services.

(3)(A) A facility operated by a city and county for the purposes of delivering services under this section may have a capacity of 59 beds.
(B) A congregate living health facility not operated by a city and county servicing persons who are terminally ill, persons who have been diagnosed with a life-threatening illness, or both, that is located in a county with a population of 500,000 or more persons, or located in a county of the 16th class pursuant to Section 28020 of the Government Code, may have not more than 25 beds for the purpose of serving persons who are terminally ill.
(C) A congregate living health facility not operated by a city and county serving persons who are catastrophically and severely disabled, as defined in subparagraph (C) of paragraph (1) that is located in a county of 500,000 or more persons may have not more than 12 beds for the purpose of serving persons who are catastrophically and severely disabled.

(5) A congregate living health facility shall have a noninstitutional, homelike environment.

~~***MENTALLY RETARDED PERSONS, PROFOUNDLY OR SEVERELY,*** *shall mean any retarded person who is unable to evacuate a building unassisted during emergency conditions.*~~

~~*Note: The determination as to such incapacity shall be made by the Director of the State Department of Public Health or his or her designated representative pursuant to Health and Safety Code Section 13131.3.*~~

PERSONS WITH INTELLECTUAL DISABILITIES, PROFOUNDLY OR SEVERELY. *Shall mean any persons with intellectual disabilities who is unable to evacuate a building unassisted during emergency conditions.*

Note: The determination as to such incapacity shall be made by the Director of the State Department of Public Health or his or her designated representative pursuant to Health and Safety Code Section 13131.3.

Notation:
Authority: Health and Safety Code Sections 1250, 1569.72, 1569.78, 1568.02, 1502, 1597.44, 1597.45, 1597.46, 1597.54, 1597.65, 13108, 13108.5, 13114, 13143, 13143.2, 13143.6, 13146, 17921, 18949.2, Government Code Section 51189
References: Health and Safety Code Sections 13143, 18949.2, Government Code Sections 51176, 51177, 51178, 51179, Public Resources Code Sections 4201 through 4204

[4. The SFM proposes to only adopt Sections R302.1 – R302.14, R303.7 – R308.1, R308.3 – R308.4, R309.5, R309.6, R310 – R310.4, R311 – R311.8.3.3, R312 – R312.2.2, R313 – R313.3.8.2, R314 – R314.7.4, R316, R319, R321, R335 – R335.9, R336 – R336.8, R337 – R337.10.2, and R338 – R338.4 contained in Chapter 3.]

(See item 13 for existing SFM amendments and California regulations that are brought forward without modification.)

CHAPTER 3
BUILDING PLANNING

R314.3.1 Installation near cooking appliances. ~~Smoke alarms shall not be installed in the following locations unless this would prevent placement of a smoke alarm in a location required by Section R314.3.~~
~~1. Ionization smoke alarms shall not be installed less than 20 feet (6096 mm) horizontally from a permanently installed cooking *appliance.*~~
~~2. Ionization smoke alarms with an alarm silencing switch shall not be installed less than 10 feet (3048 mm) horizontally from a permanently installed cooking *appliance.*~~
~~3. Photoelectric smoke alarms shall not be installed less than 6 feet (1828 mm) horizontally from a permanently installed cooking *appliance.*~~
See Section R314.3.3 for specific location requirements.

R314.5 Combination alarms. Combination smoke and carbon monoxide alarms shall be permitted to be used in lieu of smoke alarms. *Systems and components shall be California State Fire Marshal listed and approved in accordance with California Code of Regulations, Title 19, Division 1 for the purpose for which they are installed.*

R314.7.1 General. Fire alarm systems shall comply with the provisions of this code and the household fire warning equipment provisions of NFPA 72. Smoke detectors shall be listed in accordance with UL 268. *Systems and components shall be California State Fire Marshal listed and approved in accordance with California Code of Regulations, Title 19, Division 1 for the purpose for which they are installed.*

R324.7.2.6 Locations of DC conductors. *Conduit, wiring systems, and raceways for photovoltaic circuits shall be located as close as possible to the ridge or hip or valley and from the hip or valley as directly as possible to an outside wall to reduce trip hazards and maximize ventilation opportunities. Conduit runs between sub arrays and to DC combiner boxes shall be installed in a manner that minimizes the total amount of conduit on the roof by taking the shortest path from the array to the DC combiner box. The DC combiner boxes shall be located such that conduit runs are minimized in the pathways between arrays. DC wiring shall be installed in metallic conduit or raceways when located within enclosed spaces in a building. Conduit shall run along the bottom of load bearing members.*

~~SECTION R331~~
~~SOLAR PHOTOVOLTAIC PANELS/MODULES~~

~~**R331.1 Solar photovoltaic power systems.** Solar photovoltaic power systems shall be installed in accordance with Sections R331.2 through R331.4 and the California Electrical Code.~~

~~**R331.2 Access and pathways.** Roof access, pathways and spacing requirements shall be provided in accordance with Sections R331.2.1 through R331.2.2.4.~~

~~**Exceptions:**~~
~~1. Detached, nonhabitable Group U structures including, but not limited to, parking shade structures, carports, solar trellises and similar structures.~~
~~2. Roof access, pathways, and spacing requirements need not be provided where the fire code official has determined rooftop operations will not be employed.~~

~~**R331.2.1 Roof access points.** Roof access points shall be located in areas that do not require the placement of ground ladders over openings such as windows or doors, and located at strong points of building construction in locations where the access point does not conflict with overhead obstructions such as tree limbs, wires or signs.~~

~~**R331.2.2 Residential systems for one- and two-family dwellings.** Access to residential systems for one- and two-family dwellings shall be provided in accordance with Sections R331.2.1 through R331.2.2.4.~~

~~**R331.2.2.1 Size of solar photovoltaic array.** Each photovoltaic array shall be limited to 150 feet (45 720 mm) by 150 feet (45 720 mm). Multiple arrays shall be separated by a 3 foot wide (914 mm) clear access pathway.~~

~~**R331.2.2.2 Hip roof layouts.** Panels/ and modules installed on residential Group R-3 buildings with hip roof layouts shall be located in a manner that provides a 3 foot wide (914 mm) clear access pathway from the eave to the ridge on each roof slope where panels/ and modules are located. The access pathway shall be located at a structurally sound location on the building capable of supporting the live load of fire fighters accessing the roof.~~

~~**Exception:** These requirements shall not apply to roofs with slopes of two units vertical in 12 units horizontal (2:12) or less.~~

~~**R331.2.2.3 Single ridge roofs.** Panels and modules installed on residential buildings with a single ridge shall be located in a manner that provides two, 3 foot wide (914 mm) access pathways from the eave to the ridge on each roof slope where panels and modules are located.~~

~~**Exception:** This requirement shall not apply to roofs with slopes of two units vertical in 12 units horizontal (2:12) or less.~~

~~**R331.2.2.4Roofs with hips and valleys** Panels and modules installed on residential buildings with roof hips and valleys shall be located no closer than 18 inches (457 mm) to a hip or a valley where Panels and modules are to be placed on both sides of a hip or valley. Where panels are to be located on only one side of a hip or valley that is of equal length, the panels shall be permitted to be placed directly adjacent to the hip or valley.~~

~~**Exception:** These requirements shall not apply to roofs with slopes of two units vertical in 12 units horizontal (2:12) or less.~~

~~**R331.2.2.5 Allowance for smoke ventilation operation.** Panels and modules installed on Group R-3 buildings shall be located no less than 3 feet (914 mm) from the ridge in order to allow for fire department smoke ventilation operations.~~

~~**Exception:** Panels and modules shall be permitted to be located up to the roof ridge where an alternative ventilation method approved by the fire chief has been provided or where the fire chief has determined vertical ventilation techniques will not be employed.~~

~~**R325.5.1**~~**R335.5.1 Automatic sprinkler systems in Group R-3.1 occupancies.** *An automatic sprinkler system shall be installed where required in Section R313.*

Exceptions:

1. *Existing Group R-3 occupancies converted to Group R-3.1 occupancies not housing bedridden clients, not housing nonambulatory clients above the first floor, and not housing clients above the second floor.*
2. *Existing Group R-3 occupancies converted to Group R-3.1 occupancies housing only one bedridden client and complying with Section ~~R325.6.3.3~~R335.6.3.3.*
3. *Pursuant to Health and Safety Code Section 13113 existing occupancies housing ambulatory children only, none of whom are mentally ill ~~or mentally retarded~~ children or children with intellectual disabilities, and the buildings or portions thereof in which such children are housed are not more than two stories in height, and buildings or portions thereof housing such children have an automatic fire alarm system activated by approved smoke detectors.*
4. *Pursuant to Health and Safety Code Section 13143.6 existing occupancies licensed for protective social care which house ambulatory clients only, none of whom is a child (under the age of 18 years), or who is elderly (65 years of age or over).*

***~~R325.6.6~~R335.6.6* Floor separation.** *Group R-3.1 occupancies with non-ambulatory clients housed above the first floor shall be provided with a non-fire resistance constructed floor separation at stairs which will prevent smoke migration between floors. Such floor separation shall have equivalent construction of 0.5 inch (12.7 mm) gypsum wallboard on one side of wall framing.*

Exceptions:

1. *Occupancies with at least one exterior exit from floors occupied by clients.*
2. *Occupancies provided with automatic fire sprinkler systems complying with chapter 9.*

***~~R327.6.2~~R337.6.2* Requirements.** *Ventilation openings for enclosed attics, enclosed eave soffit spaces, enclosed rafter spaces formed where ceilings are applied directly to the underside of roof rafters, and underfloor ventilation openings shall be fully covered with metal wire mesh, vents, other materials, or other devices that meet one of the following requirements:*

1. Listed vents complying with ASTM E2886 with the following test results:
1.1 The Ember Intrusion Test shall have no flaming ignition of the cotton material.
1.2 There shall be no flaming ignition during the Integrity Test portion of the Flame Intrusion Test. The maximum temperature of the unexposed side of the vent shall not exceed 662°F (350°C).

2. Vents complying with all of the following:
2.1. The dimensions of the openings therein shall be a minimum of 1/16th inch (1.6 mm) and shall not exceed 1/8th inch (3.2 mm).
2.2. The materials used shall be noncombustible.

***Exception:** Vents located under the roof covering, along the ridge of roofs, with the exposed surface of the vent covered by noncombustible wire mesh, may be of combustible materials.*

2.3. The materials used shall be corrosion resistant.

***~~R327.6.3~~R337.6.3* Ventilation openings on the Underside of Eaves and Cornices:** *Vents shall not be installed on the underside of eaves and cornices.*

Exceptions:
1. Listed vents complying with ASTM E2886 with the following test results:
1.1 The Ember Intrusion Test shall have no flaming ignition of the cotton material.
1.2 There shall be no flaming ignition during the Integrity Test portion of the Flame Intrusion Test. The maximum temperature of the unexposed side of the vent shall not exceed 662°F (350°C).

~~1.~~2. The enforcing agency may accept or approve special eave and cornice vents that resist the intrusion of flame and burning embers.
~~2.~~3. Vents complying with the requirements of Section ~~R327.6.2~~R337.6.2 may be installed on the underside of eaves and cornices in accordance with either one of the following conditions:

~~2.1.~~3.1 The attic space being ventilated is fully protected by an automatic sprinkler system installed in accordance with Section 903.3.1.1 of the California Building Code or,
~~2.2.~~3.2 The exterior wall covering and exposed underside of the eave are of noncombustible material, or ignition-resistant-materials as determined in accordance with SFM Standard 12-7A-5 Ignition-Resistant Material and the vent is located more than 12 feet from the ground or walking surface of a deck, porch, patio, or similar surface.

~~R327.7.5~~R337.7.5 Enclosed roof eaves and roof eave soffits. *The exposed underside of enclosed roof eaves having either a boxed-in roof eave soffit with a horizontal underside, or sloping rafter tails with an exterior covering applied to the underside of the rafter tails, shall be protected by one of the following:*

1. *Non-combustible material.*
2. *Ignition-resistant material.*
3. *One layer of 5/8-inch Type X gypsum sheathing applied behind an exterior covering on the underside of the rafter tails or soffit..*
4. *The exterior portion of a 1-hour fire resistive exterior wall assembly applied to the underside of the rafter tails or soffit including assemblies using the gypsum panel and sheathing products listed in the Gypsum Association Fire Resistance Design Manual.*
5. *Boxed-in roof eave soffit assemblies with a horizontal underside that meet the performance criteria in accordance with the test procedures set forth in either of the following:*
   5.1 SFM Standard 12-7A-3; or
   5.2 ASTM E2957

Exceptions: *The following materials do not require protection:*
1. *Gable end overhangs and roof assembly projections beyond an exterior wall other than at the lower end of the rafter tails.*
2. *Fascia and other architectural trim boards.*

~~R327.7.6~~R337.7.6 Exterior porch ceilings. *The exposed underside of exterior porch ceilings shall be protected by one of the following:*
1. *Non-combustible material.*
2. *Ignition-resistant material.*
3. *One layer of 5/8-inch Type X gypsum sheathing applied behind the exterior covering on the underside of the ceiling.*
4. *The exterior portion of a 1-hour fire resistive exterior wall assembly applied to the underside of the ceiling assembly including assemblies using the gypsum panel and sheathing products listed in the Gypsum Association Fire Resistance Design Manual.*
5. *Porch ceiling assemblies with a horizontal underside that meet the performance criteria in accordance with the test procedures set forth in either of the following:*
   5.1 SFM Standard 12-7A-3; or
   5.2 ASTM E2957

Exception: *Architectural trim boards.*

~~R327.7.7~~R337.7.7 Floor Projections. *The exposed underside of a cantilevered floor projection where a floor assembly extends over an exterior wall shall be protected by one of the following:*

1. *Non-combustible material.*
2. *Ignition-resistant material.*
3. *One layer of 5/8-inch Type X gypsum sheathing applied behind an exterior covering on the underside of the floor projection.*
4. *The exterior portion of a 1-hour fire resistive exterior wall assembly applied to the underside of the floor projection including assemblies using the gypsum panel and sheathing products listed in the Gypsum Association Fire Resistance Design Manual.*
5. *The underside of a floor projection assembly that meet the performance criteria in accordance with the test procedures set forth in either of the following:*
   5.1 SFM Standard 12-7A-3; or
   5.2 ASTM E2957

Exception: *Architectural trim boards.*

***~~R327.7.8~~R337.7.8* Underfloor Protection.** *The underfloor area of elevated or overhanging buildings shall be enclosed to grade in accordance with the requirements of this chapter or the underside of the exposed underfloor shall consist of one of the following:*

1. *Non-combustible material.*
2. *Ignition-resistant material.*
3. *One layer of 5/8-inch Type X gypsum sheathing applied behind an exterior covering on the underside of the floor projection.*
4. *The exterior portion of a 1-hour fire resistive exterior wall assembly applied to the underside of the floor including assemblies using the gypsum panel and sheathing products listed in the Gypsum Association Fire Resistance Design Manual.*
5. *The underside of a floor assembly that meets the performance criteria in accordance with the test procedures set forth in either of the following:*

5.1 SFM Standard 12-7A-3; or
5.2 ASTM E2957

Exception: *Heavy timber structural columns and beams do not require protection.*

***~~R327.7.9~~R337.7.9* Underside of Appendages.** *When required by the enforcing agency the underside of overhanging appendages shall be enclosed to grade in accordance with the requirements of this chapter or the underside of the exposed underfloor shall consist of one of the following:*

1. *Non-combustible material.*
2. *Ignition-resistant material.*
3. *One layer of 5/8-inch Type X gypsum sheathing applied behind an exterior covering on the underside of the floor projection.*
4. *The exterior portion of a 1-hour fire resistive exterior wall assembly applied to the underside of the floor including assemblies using the gypsum panel and sheathing products listed in the Gypsum Association Fire Resistance Design Manual.*
5. *The underside of a floor assembly that meets the performance criteria in accordance with the test procedures set forth in either of the following:*

5.1 SFM Standard 12-7A-3; or
5.2 ASTM E2957

Exception: *Heavy timber structural columns and beams do not require protection*

Notation:
Authority: Health and Safety Code Sections 1250, 1569.72, 1569.78, 1568.02, 1502, 1597.44, 1597.45, 1597.46, 1597.54, 1597.65, 13108, 13108.5, 13114, 13143, 13143.2, 13143.6, 13146, 17921, 18949.2, Government Code Section 51189
References: Health and Safety Code Sections 13143, 18949.2, Government Code Sections 51176, 51177, 51178, 51179, Public Resources Code Sections 4201 through 4204

[5. The SFM proposes to not adopt Chapter 4 though Chapter 7.]

CHAPTER 4
FOUNDATIONS

CHAPTER 5
FLOORS

CHAPTER 6
WALL CONSTRUCTION

CHAPTER 7
WALL COVERING

Notation:
Authority: Health and Safety Code Sections 13108, 13143, 17921, 18949.2
References: Health and Safety Code Sections 13143, 18949.2

[6. The SFM proposes to only adopt Sections R802.1.5 – R802.1.5.10 contained in Chapter 8.]

(See item 13 for existing SFM amendments and California regulations that are brought forward without modification.)

CHAPTER 8
ROOF-CEILING CONSTRUCTION

Notation:
Authority: Health and Safety Code Sections 13108, 13108.5, 13132.7, 13143, 13143.2, 13143.6, 13146, 17921, 18949.2, Government Code Section 51189
References: Health and Safety Code Sections 13143, 18949.2, Government Code Sections 51176, 51177, 51178, 51179, Public Resources Code Sections 4201 through 4204

[7. The SFM proposes to only adopt Sections R901.1, R902.1 – R902.4, R904.1 – R904.4, and R918 contained in Chapter 9 with the following amendments and building standards.]

(See item 13 for existing SFM amendments and California regulations that are brought forward without modification.)

CHAPTER 9
ROOF ASSEMBLIES

Notation:
Authority: Health and Safety Code Sections 13108, 13108.5, 13132.7, 13143, 13143.2, 13143.6, 13146, 17921, 18949.2, Government Code Section 51189
References: Health and Safety Code Sections 13143, 18949.2, Government Code Sections 51176, 51177, 51178, 51179, Public Resources Code Sections 4201 through 4204

[8. The SFM proposes to only adopt Section R1003.9.1 contained in Chapter 10.]

(See item 13 for existing SFM amendments and California regulations that are brought forward without modification.)

CHAPTER 10
CHIMNEYS AND FIREPLACES

Notation:
Authority: Health and Safety Code Sections 13108, 13108.5, 13132.7, 13143, 13143.2, 13143.6, 13146, 17921, 18949.2, Government Code Section 51189
References: Health and Safety Code Sections 13143, 18949.2, Government Code Sections 51176, 51177, 51178, 51179, Public Resources Code Sections 4201 through 4204

[9. The SFM proposes to not adopt Chapters 11 through 43.]

Part IV—Energy Conservation

CHAPTER 11
ENERGY EFFICIENCY

Part V—Mechanical

CHAPTER 12
MECHANICAL ADMINISTRATION

CHAPTER 13
GENERAL MECHANICAL SYSTEM REQUIREMENTS

CHAPTER 14
HEATING AND COOLING EQUIPMENT

CHAPTER 15
EXHAUST SYSTEMS

CHAPTER 16
DUCT SYSTEMS

CHAPTER 17
COMBUSTION AIR

CHAPTER 18
CHIMNEYS AND VENTS

CHAPTER 19
SPECIAL FUEL-BURNING EQUIPMENT

CHAPTER 20
BOILERS ANDWATER HEATERS

CHAPTER 21
HYDRONIC PIPING

CHAPTER 22
SPECIAL PIPING AND STORAGE SYSTEMS

CHAPTER 23
SOLAR SYSTEMS

Part VI—Fuel Gas

CHAPTER 24 FUEL GAS

Part VII—Plumbing

CHAPTER 25
PLUMBING ADMINISTRATION

CHAPTER 26
GENERAL PLUMBING REQUIREMENTS

CHAPTER 27

PLUMBING FIXTURES

CHAPTER 28
WATER HEATERS

CHAPTER 29
WATER SUPPLY AND DISTRIBUTION

The provisions of Section P2902.5.4, P2902.5.4.1 and P2904 relocated to Section R313.3.

CHAPTER 30
SANITARY DRAINAGE

CHAPTER 31
VENTS

CHAPTER 32
TRAPS

CHAPTER 33
STORM DRAINAGE

Part VIII—Electrical

CHAPTER 34
GENERAL REQUIREMENTS

CHAPTER 35
ELECTRICAL DEFINITIONS

CHAPTER 36
SERVICES

CHAPTER 37
BRANCH CIRCUIT AND FEEDER REQUIREMENTS

CHAPTER 38
WIRING METHODS

CHAPTER 39
POWER AND LIGHTING DISTRIBUTION

CHAPTER 40
DEVICES AND LUMINAIRES

CHAPTER 41
APPLIANCE INSTALLATION

CHAPTER 42
SWIMMING POOLS

CHAPTER 43
CLASS 2 REMOTE-CONTROL, SIGNALING AND POWER-LIMITED CIRCUITS

Notation:
Authority: Health and Safety Code Sections 13108, 13143, 17921, 18949.2
References: Health and Safety Code Sections 13143, 18949.2

[10. The SFM proposes to adopt Chapter 44.]

(See item 13 for existing SFM amendments and California regulations that are brought forward without modification.)

Part IX—Referenced Standards

CHAPTER 44
REFERENCED STANDARDS

ASTM ASTM International
100 Barr Harbor Drive
West Conshohocken, PA 19428-2959

Standard reference number	Title	Referenced in code section number
E2886–14	*Standard Test Method for Evaluating the Ability of Exterior Vents to Resist the Entry of Embers and Direct Flame Impingent*	*R337.6.2, R337.6.3*

****ASTM E2886, Amended Sections as follows:***

Revise Sections 10.1.8.3. 10.1.8.4, and 10.1.8.5 as follows:

10.1.8.3 ~~When requested, r~~Report the temperatures of the unexposed temperatures on the unexposed side of the vent during the entire optional Insulation Test of the Flame Intrusion.

10.1.8.4 ~~When requested, t~~The maximum temperature reached during the test by any one of the unexposed surface thermocouples during the entire optional Insulation Test of the Flame Intrusion Test.

10.1.8.5 ~~When requested, t~~The maximum average temperature reached during the test by all of the unexposed surface thermocouples during the entire optional Insulation Test pf the Flame Intrusion Test.

E2957–15	*Standard Test Method for Flammability and Resistance to Wildfire Penetrations of Eaves, Soffits and Other Projections*	*R337.7.6, R337.7.7, R337.7.8, R337.7.9*

****ASTM E2957, Amended Sections as follows:***

Add new Section 12.5 as follows:

12.5 Conditions of Acceptance: *Should one of the three replicates fail to meet the Conditions of Acceptance, three additional tests may be run. All of the additional tests must meet the Conditions of Acceptance.*
1. Absence of flame penetration of the eaves or horizontal projection assembly at any time.
2. Absence of structural failure of the eaves or horizontal projection subassembly at any time.
3. Absence of sustained combustion of any kind at the conclusion of the 40-minute test.

NFPA

13—~~13~~*16*	Installation of Sprinkler Systems
13D—~~13~~*16*	Installation of Sprinkler Systems in One- and Two-family Dwellings and Manufactured Homes
13R—~~13~~*16*	Installation of Sprinkler Systems in Residential Occupancies up to and Including Four Stories in Height
72—~~13~~*16*	National Fire and Signaling ~~and Signaling~~ Alarm Code
211—13 ~~13~~	Chimneys, Fireplaces, Vents and Solid Fuel-burning Appliances
259—13 ~~13~~	Test Method for Potential Heat of Building Materials

275—13 ~~13~~ Standard Method of Fire Tests for the Evaluation of Thermal Barriers Used Over Foam Plastic Insulation
720—15 ~~12~~ Standard for the Installation of Carbon Monoxide (CO) Detection and Warning Equipment

Notation:
Authority: Health and Safety Code Sections 1250, 1569.72, 1569.78, 1568.02, 1502, 1597.44, 1597.45, 1597.46, 1597.54, 1597.65, 13108, 13108.5, 13113.5, 13113.7, 13113.8, 13114, 13143, 13143.2, 13143.6, 13146, 17921, 18949.2, Government Code Section 51189
References: Health and Safety Code Sections 13143, 18949.2, Government Code Sections 51176, 51177, 51178, 51179, Public Resources Code Sections 4201 through 4204

[11. The SFM proposes to not adopt Appendices A through L.]

APPENDIX A
SIZING AND CAPACITIES OF GAS PIPING

APPENDIX B
SIZING OF VENTING SYSTEMS SERVING APPLIANCES EQUIPPED WITH DRAFT HOODS, CATEGORY I APPLIANCES, AND APPLIANCES LISTED FOR USE WITH TYPE B VENTS

APPENDIX C
EXIT TERMINALS OF MECHANICAL DRAFT AND DIRECT VENT VENTING SYSTEMS

APPENDIX D
RECOMMENDED PROCEDURE FOR SAFETY INSPECTION OF AN EXISTING APPLIANCE INSTALLATION

APPENDIX E
MANUFACTURED HOUSING USED AS DWELLINGS

APPENDIX F
PASSIVE RADON GAS CONTROL

APPENDIX G
SWIMMING POOLS, SPAS AND HOT TUBS

APPENDIX H
PATIO COVERS

APPENDIX I
PRIVATE SEWAGE DISPOSAL

APPENDIX J
EXISTING BUILDINGS AND STRUCTURES

APPENDIX K
SOUND TRANSMISSION

APPENDIX L
PERMIT FEES

Notation:
Authority: Health and Safety Code Sections 13108, 13143, 17921, 18949.2
References: Health and Safety Code Sections 13143, 18949.2

[12. The SFM proposes to not adopt Appendices M and remove the following text.]

APPENDIX M

This Appendix is not applicable in California See Health and Safety Code Sections 1597.45, 1597.46, 1597.54 and 13143 regarding small family day care homes and large family day care homes. Provisions for day care facilities shall be in accordance with Section 1.1.3.1 for classification, R326 for large family day care, R325 for Group R-3.1 or the California Building Code.

Notation:
Authority: Health and Safety Code Sections 13108, 13143, 17921, 18949.2
References: Health and Safety Code Sections 13143, 18949.2

PART 2

[13. The SFM proposes to bring forward previously existing California building standards or amendments, which represent no change in their effect from the 2013 California Residential Code. Furthermore, the SFM proposes to codify non-substantive editorial and formatting amendments from the format based upon the 2012 International Residential Code to the format of the 2015 International Residential Code.]

CHAPTER 1

SCOPE AND APPLICATION
DIVISION I
CALIFORNIA ADMINISTRATION

SECTION 1.1
GENERAL

1.1.2 Purpose. *The purpose of this code is to establish the minimum requirements to safeguard the public health, safety and general welfare through structural strength, means of egress facilities, stability, access to persons with disabilities, sanitation, adequate lighting and ventilation, and energy conservation; safety to life and property from fire and other hazards attributed to the built environment; and to provide safety to fire fighters and emergency responders during emergency operations.*

1.1.3 Scope. *The provisions of this code shall apply to the construction, alteration, movement, enlargement, replacement, repair, equipment, use and occupancy, location, maintenance, removal and demolition of every detached one-and two-family dwelling, efficiency dwelling unit, and townhouse not more than three stories above grade plane in height with a separate means of egress and structures accessory thereto throughout the State of California.*

Exceptions:
1. Live/work units complying with the requirements of Section 419 of the California Building Code shall be permitted to be built as one- and two-family dwellings or townhouses. Fire suppression required by Section 419.5 of the California Building Code when constructed under the California Residential Code for one- and two-family dwellings shall conform to Section 903.3.1.3 of the California Building Code.
2. Owner-occupied lodging houses with five or fewer guestrooms shall be permitted to be constructed in accordance with the California Residential Code for One- and Two-family Dwellings when equipped with a fire sprinkler system in accordance with Section R313.

1.1.3.1 Classification. *Structures or portions of structures shall be classified with respect to occupancy in one or more of the groups listed below. A room or space that is intended to be occupied at different times for different purposes shall comply with all of the requirements that are applicable to each of the purposes for which the room or space will be occupied. Structures with multiple occupancies or uses shall comply with Section 508 of the California Building Code. Where a structure is proposed for a purpose that is not specifically provided for in this code, such structure shall be classified in the group that the occupancy most nearly resembles, according to the fire safety and relative hazard involved in accordance with this code or the California Building Code.*

1.1.3.1.1 Residential Group R. *Residential Group R includes, among others, the use of a building or structure, or a portion thereof, for sleeping purposes when not classified as an Institutional Group I. Residential occupancies shall include the following:*

R-3 Residential occupancies where the occupants are primarily permanent in nature and not classified as Group R-1, R-2, R-2.1, R-3.1, R-4 or I, including:

Buildings that do not contain more than two dwelling units.
Townhouses not more than three stories above grade in height with a separate means of egress.
Adult facilities that provide accommodations for six or fewer persons of any age for less than 24-hours. Licensing categories that may use this classification include, but are not limited to:
Adult Day Programs.
Child care facilities that provide accommodations for six or fewer persons of any age for less than 24-hours.
Licensing categories that may use this classification include, but are not limited to:
Day-care Center for Mildly Ill Children,
Infant Care Center and School Age Child Day-care Center.
Family Day-care Homes that provide accommodations for 14 or fewer children, in the provider's own home for less than 24-hours.
Congregate living facilities or congregate residences with 16 or fewer persons.

R-3.1 This occupancy group may include facilities licensed by a governmental agency for a residentially based 24-hour care facility providing accommodations for six or fewer clients of any age. Clients may be classified as ambulatory, nonambulatory or bedridden. A Group R-3.1 occupancy shall meet the requirements for construction as defined for Group R-3, except as otherwise provided for in Section ~~R325~~R335 Special Provisions For Licensed 24-Hour Care Facilities in a Group R-3.1 Occupancy. This group may include:

Adult Residential Facilities
Congregate Living Health Facilities
Foster Family Homes
Group Homes
Intermediate Care Facilities for the developmentally disabled habilitative
Intermediate Care Facilities for the Developmentally disabled nursing
Nurseries for the full-time care of children under the age of six, but not including "infants" as defined in Section 202
Residential Care Facilities for the Elderly
Small Family Homes and Residential Care
Facilities for the chronically ill

Exception: *Foster Family Homes or Group Homes licensed by the Department of Social Services which provide nonmedical board, room and care for six or fewer ambulatory children or children two years of age or younger, and which do not have any nonambulatory clients shall not be subject to regulations found in Section ~~R325~~R335.*

Pursuant to Health and Safety Code Section 13143 with respect to these exempted facilities, no city, county or public district shall adopt or enforce any requirement for the prevention of fire or for the protection of life and property against fire and panic unless the requirement would be applicable to a structure regardless of the special occupancy. Nothing shall restrict the application of state or local housing standards to such facilities if the standards are applicable to residential occupancies and are not based on the use of the structure as a facility for ambulatory children. For the purpose of this exception, ambulatory children does not include relatives of the licensee or the licensee's spouse.

Large Family Day-Care Homes. See Section ~~R326~~R336.

1.1.3.1.2 Utility and Miscellaneous Group U. *Buildings and structures of an accessory character and miscellaneous structures not classified in any specific occupancy shall be constructed, equipped and maintained to conform to the requirements of this code commensurate with the fire and life hazard incidental to their occupancy. Group U shall include, but not be limited to, the following:*

Agricultural buildings
Aircraft hangars, accessory to a one- or two-family residence (see Section 412.5 of the California Building Code)
Barns
Carports
Fences more than 6 feet (1829 mm) high
Grain silos, accessory to a residential occupancy
Greenhouses
Livestock shelters
Private garages

Retaining walls
Sheds
Stables
Tanks
Towers

1.1.3.2 Regulated buildings, structures and applications. *The model code, state amendments to the model code, and/or state amendments where there are no relevant model code provisions shall apply to detached one- and two-family dwellings, townhouses and structures accessory thereto. State agencies with regulatory authority are referenced in the Matrix Adoption Table and as specified in Sections 1.2 through 1.14, except where modified by local ordinance pursuant to Section 1.1.8. When adopted by a state agency, the provisions of this code shall be enforced by the appropriate enforcing agency, but only to the extent of authority granted to such agency by the state legislature.*

Note: *See Preface to distinguish the model code provisions from the California provisions.*

1. One- and two-family dwellings, townhouses, employee housing, factory-built housing and other types of dwellings containing sleeping accommodations with common toilets or cooking facilities. See Section 1.2.1.1.1.
2. Permanent buildings and permanent accessory buildings or structures constructed within mobilehome parks and special occupancy parks regulated by the Department of Housing and Community Development. See Section 1.2.1.1.3.
3. Applications regulated by the Office of the State Fire Marshal include, but are not limited to, the following in accordance with Section 1.11:

3.1. Buildings or structures used or intended for use as a/an:
1. Home for the elderly, children's nursery, children's home or institution, school or any similar occupancy of any capacity
2. Small family day-care homes, large family day-care homes, residential facilities and residential facilities for the elderly, residential care facilities
3. State institutions or other state-owned or state-occupied buildings
4. Residential structures
5. Tents, awnings or other fabric enclosures used in connection with any occupancy
6. Fire alarm devices, equipment and systems in connection with any occupancy
7. Wildland-urban interface fire areas

1.1.4 Appendices. *Provisions contained in the appendices of this code shall not apply unless specifically adopted by a state agency or adopted by a local enforcing agency in compliance with Health and Safety Code Section 18901 et seq. for Building Standards Law, Health and Safety Code Section 17950 for State Housing Law and Health and Safety Code Section 13869.7 for Fire Protection Districts. See Section 1.1.8 of this code.*

1.1.5 Referenced codes. *The codes, standards and publications adopted and set forth in this code, including other codes, standards and publications referred to therein are, by title and date of publication, hereby adopted as standard reference documents of this code. When this code does not specifically cover any subject related to building design and construction, recognized architectural or engineering practices shall be employed. The National Fire Codes, standards and the Fire Protection Handbook of the National Fire Protection Association are permitted to be used as authoritative guides in determining recognized fire prevention engineering practices.*

1.1.6 Nonbuilding standards, orders and regulations. *Requirements contained in the International Residential Code, or in any other referenced standard, code or document, which are not building standards as defined in Health and Safety Code Section 18909, shall not be construed as part of the provisions of this code. For nonbuilding standards, orders and regulations, see other titles of the California Code of Regulations.*

1.1.7 Order of precedence and use.

1.1.7.1 Differences. *In the event of any differences between these building standards and the standard reference documents, the text of these building standards shall govern.*

1.1.7.2 Specific provisions. *Where a specific provision varies from a general provision, the specific provision shall apply.*

1.1.7.3.1 Detached one- and two-family dwellings. *Detached one-and two-family dwellings and townhouses not more than three stories above grade plane with a separate means of egress and their accessory structures shall not be required to comply with the more restrictive requirements contained in Title 24, Part 2, the California Building Code, unless the proposed structure(s) exceed the design limitations established in the California Residential Code and the code user is specifically directed to use the California Building Code.*

1.1.8 City, county, or city and county amendments, additions or deletions. *The provisions of this code do not limit the authority of city, county, or city and county governments to establish more restrictive and reasonably necessary differences to the provisions contained in this code pursuant to complying with Section 1.1.8.1. The effective date of amendments, additions or deletions to this code by city, county, or city and county filed pursuant to Section 1.1.8.1 shall be the date filed. However, in no case shall the amendments, additions or deletions to this code be effective any sooner than the effective date of this code. Local modifications shall comply with Health and Safety Code Section 18941.5 for Building Standards Law, Health and Safety Code Section 17958 for State Housing Law or Health and Safety Code Section 13869.7 for Fire Protection Districts.*

1.1.9 Effective date of this code. *Only those standards approved by the California Building Standards Commission that are effective at the time an application for building permit is submitted shall apply to the plans and specifications for, and to the construction performed under, that permit. For the effective dates of the provisions contained in this code, see the History Note page of this code.*

1.1.11 Format. *This part fundamentally adopts the International Residential Code by reference on a chapter-by-chapter basis. When a specific chapter of the International Residential Code is not printed in the code and is marked "Reserved" such chapter of the International Residential Code is not adopted as a portion of this code. When a specific chapter of the International Residential Code is marked "Not adopted by the State of California" but appears in the code, it may be available for adoption by local ordinance.*

Note: *Matrix Adoption Tables at the front of each chapter may aid the code user in determining which chapter or sections within a chapter are applicable to buildings under the authority of a specific state agency, but they are not to be considered regulatory.*

1.1.12 Validity. *If any chapter, section, subsection, sentence, clause or phrase of this code is for any reason held to be unconstitutional, contrary to statute, exceeding the authority of the state as stipulated by statutes or otherwise inoperative, such decision shall not affect the validity of the remaining portion of this code.*

SECTION 1.2
Reserved

SECTION 1.3
Reserved

SECTION 1.4
Reserved

SECTION 1.5
Reserved

SECTION 1.6
Reserved

SECTION 1.7
Reserved

SECTION 1.8
DEPARTMENT OF HOUSING AND COMMUNITY DEVELOPMENT (HCD)

SECTION 1.9
Reserved

SECTION 1.10
Reserved

SECTION 1.11
OFFICE OF THE STATE FIRE MARSHAL

1.11.1 SFM—Office of the State Fire Marshal. *Specific scope of application of the agency responsible for enforcement, the enforcement agency and the specific authority to adopt and enforce such provisions of this code, unless otherwise stated.*

Application:
Institutional, educational or any similar occupancy. Any building or structure used or intended for use as an asylum, jail, mental hospital, hospital, sanitarium, home for the aged, children's nursery, children's home, school or any similar occupancy of any capacity.

Authority cited*—Health and Safety Code Section 13143.*
Reference*—Health and Safety Code Section 13143.*

Assembly or similar place of assemblage. *Any theater, dancehall, skating rink, auditorium, assembly hall, meeting hall, nightclub, fair building or similar place of assemblage where 50 or more persons may gather together in a building, room or structure for the purpose of amusement, entertainment, instruction, deliberation, worship, drinking or dining, awaiting transportation, or education.*

Authority cited*—Health and Safety Code Section 13143.*
Reference*—Health and Safety Code Section 13143.*

Small family day-care homes.

Authority cited*—Health and Safety Code Sections 1597.45, 1597.54, 13143 and 17921.*
Reference*—Health and Safety Code Section 13143.*

Large family day-care homes.

Authority cited*—Health and Safety Code Sections 1597.46, 1597.54 and 17921.*
Reference*—Health and Safety Code Section 13143.*

Residential facilities and residential facilities for the elderly.

Authority cited*—Health and Safety Code Section 13133.*
Reference*—Health and Safety Code Section 13143.*

Any state institution or other state-owned or state-occupied building.

Authority cited*—Health and Safety Code Section 13108.*
Reference*—Health and Safety Code Section 13143.*

High-rise structures.

Authority cited*—Health and Safety Code Section 13211.*
Reference*—Health and Safety Code Section 13143.*

Motion picture production studios.

Authority cited*—Health and Safety Code Section 13143.1.*

Reference—*Health and Safety Code Section 13143.*

Organized camps.

Authority cited—*Health and Safety Code Section 18897.3.*
Reference—*Health and Safety Code Section 13143.*

Residential. *All hotels, motels, lodging houses, apartment houses and dwellings, including congregate residences and buildings and structures accessory thereto. Multiple-story structures existing on January 1, 1975, let for human habitation, including and limited to, hotels, motels and apartment houses, less than 75 feet (22 860 mm) above the lowest floor level having building access, wherein rooms used for sleeping are let above the ground floor.*

Authority cited—*Health and Safety Code Sections 13143.2 and 17921.*
Reference—*Health and Safety Code Section 13143.*

Residential care facilities. *Certified family care homes, out-of-home placement facilities, halfway houses, drug and/or alcohol rehabilitation facilities and any building or structure used or intended for use as a home or institution for the housing of any person of any age when such person is referred to or placed within such home or institution for protective social care and supervision services by any governmental agency.*

Authority cited—*Health and Safety Code Section 13143.6.*
Reference—*Health and Safety Code Section 13143.*

Tents, awnings *or other fabric enclosures used in connection with any occupancy.*

Authority cited—*Health and Safety Code Section 13116.*
Reference—*Health and Safety Code Section 13143.*

Fire alarm devices, equipment and systems *in connection with any occupancy.*

Authority cited—*Health and Safety Code Section 13114.*
Reference—*Health and Safety Code Section 13143.*

Hazardous materials.

Authority cited—*Health and Safety Code Section 13143.9.*
Reference—*Health and Safety Code Section 13143.*

Flammable and combustible liquids.

Authority cited—*Health and Safety Code Section 13143.6.*
Reference—*Health and Safety Code Section 13143.*

Public school automatic fire detection, alarm and sprinkler systems.

Authority cited—*Health and Safety Code Section 13143 and California Education Code Article 7.5, Sections 17074.50, 17074.52 and 17074.54.*
Reference—*Government Code Section 11152.5, Health and Safety Code Section 13143 and California Education Code Chapter 12.5, Leroy F. Greene School Facilities Act of 1998, Article 1.*

Wildland-Urban interface fire area.

Authority cited—*Health and Safety Code Sections 13143, 13108.5(a) and 18949.2(b) and (c) and Government Code Section 51189.*
Reference—*Health and Safety Code Sections 13143, Government Code Sections 51176, 51177, 51178 and 51179 and Public Resources Code Sections 4201 through 4204.*

1.11.2 Duties and powers of the enforcing agency.

1.11.2.1 Enforcement.

1.11.2.1.1 *The responsibility for enforcement of building standards adopted by the State Fire Marshal and published in the California Building Standards Code relating to fire and panic safety and other regulations of the State Fire Marshal shall except as provided in Section 1.11.2.1.2 be as follows:*

1. The city, county, or city and county with jurisdiction in the area affected by the standard or regulation shall delegate the enforcement of the building standards relating to fire and panic safety and other regulations of the State Fire Marshal as they relate to Group R-3 occupancies, as described in Section 1.1.3.1 or CCR, Part 2 California Building Code,, Section 310.1, to either of the following:

1.1. The chief of the fire authority of the city, county or city and county, or an authorized representative.
1.2. The chief building official of the city, county or city and county, or an authorized representative.

2. The chief of any city or county fire department or of any fire protection district, and authorized representatives, shall enforce within the jurisdiction the building standards and other regulations of the State Fire Marshal, except those described in Item 1 or 4.
3. The State Fire Marshal shall have authority to enforce the building standards and other regulations of the State Fire Marshal in areas outside of corporate cities and districts providing fire protection services.
4. The State Fire Marshal shall have authority to enforce the building standards and other regulations of the State Fire Marshal in corporate cities and districts providing fire protection services on request of the chief fire official or the governing body.
5. Any fee charged pursuant to the enforcement authority of this section shall not exceed the estimated reasonable cost of providing the service for which the fee is charged pursuant to Section 66014 of the Government Code.

1.11.2.1.2 *Pursuant to Health and Safety Code Section 13108, and except as otherwise provided in this section, building standards adopted by the State Fire Marshal published in the California Building Standards Code relating to fire and panic safety shall be enforced by the State Fire Marshal in all state-owned buildings, state-occupied buildings and state institutions throughout the state. Upon the written request of the chief fire official of any city, county, or fire protection district, the State Fire Marshal may authorize such chief fire official and his or her authorized representatives, in their geographical area of responsibility, to make fire prevention inspections of state-owned or state-occupied buildings, other than state institutions, for the purpose of enforcing the regulations relating to fire and panic safety adopted by the State Fire Marshal pursuant to this section and building standards relating to fire and panic safety published in the California Building Standards Code. Authorization from the State Fire Marshal shall be limited to those fire departments or fire districts which maintain a fire prevention bureau staffed by paid personnel.*

Pursuant to Health and Safety Code Section 13108, any requirement or order made by any chief fire official who is authorized by the State Fire Marshal to make fire prevention inspections of state-owned or state-occupied buildings, other than state institutions, may be appealed to the State Fire Marshal. The State Fire Marshal shall, upon receiving an appeal and subject to the provisions of Chapter 5 (commencing with Section 18945) of Part 2.5 of Division 13 of the Health and Safety Code, determine if the requirement or order made is reasonably consistent with the fire and panic safety regulations adopted by the State Fire Marshal and building standards relating to fire and panic safety published in the California Building Code.

Any person may request a code interpretation from the State Fire Marshal relative to the intent of any regulation or provision adopted by the State Fire Marshal. When the request relates to a specific project, occupancy or building, the State Fire Marshal shall review the issue with the appropriate local enforcing agency prior to rendering such code interpretation.

1.11.2.1.3 *Pursuant to Health and Safety Code Section 13112, any person who violates any order, rule or regulation of the State Fire Marshal is guilty of a misdemeanor punishable by a fine of not less than $100.00 or more than $500.00, or by imprisonment for not less than six months, or by both. A person is guilty of a separate offense each day during which he or she commits, continues or permits a violation of any provision of, or any order, rule or regulation of, the State Fire Marshal as contained in this code.*

Any inspection authority who, in the exercise of his or her authority as a deputy State Fire Marshal, causes any legal complaints to be filed or any arrest to be made shall notify the State Fire Marshal immediately following such action.

1.11.2.2 Right of entry. *The fire chief of any city, county or fire protection district, or such person's authorized representative, may enter any state institution or any other state-owned or state-occupied building for the purpose of preparing a fire suppression preplanning program or for the purpose of investigating any fire in a state-occupied building.*

The State Fire Marshal, his or her deputies or salaried assistants, the chief of any city or county fire department or fire protection district and his or her authorized representatives may enter any building or premises not used for dwelling purposes at any reasonable hour for the purpose of enforcing this chapter. The owner, lessee, manager or operator of any such building or premises shall permit the State Fire Marshal, his or her deputies or salaried assistants and the chief of any city or county fire department or fire protection district and his or her authorized representatives to enter and inspect them at the time and for the purpose stated in this section.

1.11.2.3 More restrictive fire and panic safety building standards.

1.11.2.3.1 *Any fire protection district organized pursuant to Health and Safety Code Part 2.7 (commencing with Section 13800) of Division 12 may adopt building standards relating to fire and panic safety that are more stringent than those building standards adopted by the State Fire Marshal and contained in the California Building Standards Code. For these purposes, the district board shall be deemed a legislative body and the district shall be deemed a local agency. Any changes or modifications that are more stringent than the requirements published in the California Building Standards Code relating to fire and panic safety shall be subject to Section 1.1.8.1.*

1.11.2.3.2 *Any fire protection district that proposes to adopt an ordinance pursuant to this section shall, not less than 30 days prior to noticing a proposed ordinance for public hearing, provide a copy of that ordinance, together with the adopted findings made pursuant to Section 1.11.2.3.1, to the city, county, or city and county where the ordinance will apply. The city, county, or city and county may provide the district with written comments, which shall become part of the fire protection district's public hearing record.*

1.11.2.3.3 *The fire protection district shall transmit the adopted ordinance to the city, county, or city and county where the ordinance will apply. The legislative body of the city, county, or city and county may ratify, modify or deny an adopted ordinance and transmit its determination to the district within 15 days of the determination. Any modification or denial of an adopted ordinance shall include a written statement describing the reasons for any modifications or denial. No ordinance adopted by the district shall be effective until ratification by the city, county, or city and county where the ordinance will apply. Upon ratification of an adopted ordinance, the city, county, or city and county shall file a copy of the findings of the district, and any findings of the city, county, or city and county, together with the adopted ordinance expressly marked and identified to which each finding refers, in accordance with Section 1.1.8.1:3.*

1.11.2.4 Request for alternate means of protection. *Requests for approval to use an alternative material, assembly or materials, equipment, method of construction, method of installation of equipment or means of protection shall be made in writing to the enforcing agency by the owner or the owner's authorized representative and shall be accompanied by a full statement of the conditions. Sufficient evidence or proof shall be submitted to substantiate any claim that may be made regarding its conformance. The enforcing agency may require tests and the submission of a test report from an approved testing organization as set forth in Title 19, California Code of Regulation, to substantiate the equivalency of the proposed alternative means of protection.*

When a request for alternate means of protection involves hazardous materials, the authority having jurisdiction may consider implementation of the findings and recommendations identified in a Risk Management Plan (RMP) developed in accordance with Title 19, Division 2, Chapter 4.5, Article 3.

Approval of a request for use of an alternative material, assembly of materials, equipment, method of construction, method of installation of equipment or means of protection made pursuant to these provisions shall be limited to the particular case covered by request and shall not be construed as establishing any precedent for any future request.

1.11.2.5 Appeals. *When a request for an alternate means of protection has been denied by the enforcing agency, the applicant may file a written appeal to the State Fire Marshal for consideration of the applicant's proposal. In considering such appeal, the State Fire Marshal may seek the advice of the State Board of Fire Services. The State Fire Marshal shall, after considering all of the facts presented, including any recommendations of the State Board of Fire Services, determine if the proposal is for the purposes intended, at least equivalent to that specified in these*

regulations in quality, strength, effectiveness, fire resistance, durability and safety, and shall transmit such findings and any recommendations to the applicant and to the enforcing agency.

1.11.3 Construction documents.

1.11.3.1 Public schools. *Plans and specifications for the construction, alteration or addition to any building owned, leased or rented by any public school district shall be submitted to the Division of the State Architect.*

1.11.3.2 Movable walls and partitions. *Plans or diagrams shall be submitted to the enforcing agency for approval before the installation of, or rearrangement of, any movable wall or partition in any occupancy. Approval shall be granted only if there is no increase in the fire hazard.*

1.11.3.3 New construction high-rise buildings.

1. Complete plans or specifications, or both, shall be prepared covering all work required to comply with new construction high-rise buildings. Such plans and specifications shall be submitted to the enforcing agency having jurisdiction.
2. All plans and specifications shall be prepared under the responsible charge of an architect or a civil or structural engineer authorized by law to develop construction plans and specifications, or by both such architect and engineer. Plans and specifications shall be prepared by an engineer duly qualified in that branch of engineering necessary to perform such services. Administration of the work of construction shall be under the charge of the responsible architect or engineer except that where plans and specifications involve alterations or repairs, such work of construction may be administered by an engineer duly qualified to perform such services and holding a valid certificate under Chapter 7 (commencing with Section 65700) of Division 3 of the Business and Professions Code for performance of services in that branch of engineering in which said plans, specifications and estimates and work of construction are applicable.

This section shall not be construed as preventing the design of fire-extinguishing systems by persons holding a C-16 license issued pursuant to Division 3, Chapter 9, Business and Professions Code. In such instances, however, the responsibility charge of this section shall prevail.

1.11.3.4 Existing high-rise buildings.

1. Complete plans or specifications, or both, shall be prepared covering all work required by ~~Section 3412~~ Chapter 11 of the California Fire Code and the California Existing Building Code for existing high-rise buildings. Such plans or specifications shall be submitted to the enforcing agency having jurisdiction.
2. When new construction is required to conform with the provisions of these regulations, complete plans or specifications, or both, shall be prepared in accordance with the provisions of this subsection. As used in this section, "new construction" is not intended to include repairs, replacements or minor alterations which do not disrupt or appreciably add to or affect the structural aspects of the building.

1.11.3.5 Retention of plans. *Refer to Building Standards Law, Health and Safety Code Sections 19850 and 19851 for permanent retention of plans.*

1.11.4 Fees. 1.11.4.1 Other fees. *Pursuant to Health and Safety Code Section 13146.2, a city, county or district which inspects a hotel, motel, lodging house or apartment house may charge and collect a fee for the inspection from the owner of the structure in an amount, as determined by the city, county or district, sufficient to pay its costs of that inspection.*

1.11.4.2 Large family day-care. *Pursuant to Health and Safety Code Section 1597.46, Large Family Day-Care Homes, the local government shall process any required permit as economically as possible, and fees charged for review shall not exceed the costs of the review and permit process.*

1.11.4.3 High-rise. *Pursuant to Health and Safety Code Section 13217, High-rise Structure Inspection: Fees and costs, a local agency which inspects a high-rise structure pursuant to Health and Safety Code Section 13217 may charge and collect a fee for the inspection from the owner of the high-rise structure in an amount, as determined by the local agency, sufficient to pay its costs of that inspection.*

1.11.4.4 Fire clearance preinspection. *Pursuant to Health and Safety Code Section 13235, Fire Clearance Preinspection, fee, upon receipt of a request from a prospective licensee of a community care facility, as defined in Section 1502, of a residential care facility for the elderly, as defined in Section 1569.2, or of a child day-care facility, as defined in Section 1596.750, the local fire enforcing agency, as defined in Section 13244, or State Fire Marshal, whichever has primary jurisdiction, shall conduct a preinspection of the facility prior to the final fire clearance approval. At the time of the preinspection, the primary fire enforcing agency shall price consultation and interpretation of the fire safety regulations and shall notify the prospective licensee of the facility in writing of the specific fire safety regulations which shall be enforced in order to obtain fire clearance approval. A fee equal to, but not exceeding, the actual cost of the preinspection services may be charged for the preinspection of a facility with a capacity to serve 25 or fewer persons. A fee equal to, but not exceeding, the actual cost of the preinspection services may be charged for a preinspection of a facility with a capacity to serve 26 or more persons.*

1.11.4.5 Care facilities. *The primary fire enforcing agency shall complete the final fire clearance inspection for a community care facility, residential care facility for the elderly, or child day-care facility within 30 days of receipt of the request for the final inspection, or as of the date the prospective facility requests the final prelicensure inspection by the State Department of Social Services, whichever is later.*

Pursuant to Health and Safety Code Section 13235, a preinspection fee equal to, but not exceeding, the actual cost of the preinspection services may be charged for a facility with a capacity to serve 25 or less clients. A fee equal to, but not exceeding, the actual cost of the preinspection services may be charged for a preinspection of a facility with a capacity to serve 26 or more clients.

Pursuant to Health and Safety Code Section 13131.5, a reasonable final inspection fee, not to exceed the actual cost of inspection services necessary to complete a final inspection may be charged for occupancies classified as residential care facilities for the elderly (RCFE).

Pursuant to Health and Safety Code Section 1569.84, neither the State Fire Marshal nor any local public entity shall charge any fee for enforcing fire inspection regulations pursuant to state law or regulation or local ordinance, with respect to residential care facilities for the elderly (RCFE) which service six or fewer persons.

1.11.4.6 Requests of the Office of the State Fire Marshal. *Whenever a local authority having jurisdiction requests that the State Fire Marshal perform plan review and/or inspection services related to a building permit, the applicable fees for such shall be payable to the Office of the State Fire Marshal.*

1.11.5 Inspections. *Work performed subject to the provisions of this code shall comply with the inspection requirements of Sections R109.1 through R109.1.6.*

1.11.5.1 Existing Group I -1 or R occupancies. *Licensed 24-hour care in a Group I-1 or R occupancy in existence and originally classified under previously adopted state codes shall be preinspected under the appropriate previous code, provided there is no change in the use or character which would place the facility in a different occupancy group.*

1.11.6 Certificate of occupancy. *A Certificate of Occupancy shall be issued as specified in Section R110.*

1.11.7 Temporary structures and uses. *See Section R107.*

1.11.8 Service utilities. *See Section R111.*

1.11.9 Stop work order. *See Section R114.*

1.11.10 Unsafe buildings, structures and equipment. *See Title 24, Part 2, California Building Code, Section 115.*

SECTION 1.12
Reserved

SECTION 1.13
Reserved

SECTION 1.14
Reserved

DIVISION II
ADMINISTRATION

Division II is not adopted by the Department of Housing and Community Development or the State Fire Marshal except where specifically indicated in the Matrix Adoption Table.

R101.2 Scope. The provisions of the ~~*International*~~*California* Residential Code for One- and Two-family Dwellings shall apply to the construction, *alteration*, movement, enlargement, replacement, repair, equipment, use and occupancy, location, removal and demolition of detached one- and two-family dwellings and townhouses not more than three stories above *grade plane* in height with a separate means of egress and their accessory structures not more than three stories above grade plane in height.

Exceptions:
1. Live/work units located in townhouses and complying with the requirements of Section 419 of the ~~*International*~~*California Building Code* shall be permitted to be constructed in accordance with the ~~*International*~~*California* Residential Code for One- and Two-Family Dwellings. Fire suppression required by Section 419.5 of the *California Building Code* when constructed under the ~~*International*~~*California Residential Code for One- and Two-family Dwellings* shall conform to Section ~~P2904~~*R313*.
2. Owner-occupied lodging houses with five or fewer guestrooms shall be permitted to be constructed in accordance with the ~~*International*~~*California Residential Code for One- and Two-family Dwellings* where equipped with a fire sprinkler system in accordance with Section ~~P2904~~*R313*.

R102.7 Existing structures. The legal occupancy of any structure existing on the date of adoption of this code shall be permitted to continue without change, except as is specifically covered in this code, the *International Property Maintenance Code* or the ~~*International*~~*California Fire Code*, or as is deemed necessary by the *building official* for the general safety and welfare of the occupants and the public.

R104.11 Alternative materials, design and methods of construction and equipment. The provisions of this code are not intended to prevent the installation of any material or to prohibit any design or method of construction not specifically prescribed by this code, provided that any such alternative has been *approved*. An alternative material, design or method of construction shall be *approved* where the *building official* finds that the proposed design is satisfactory and complies with the intent of the provisions of this code, and that the material, method or work offered is, for the purpose intended, not less than the equivalent of that prescribed in this code. Compliance with the specific performance-based provisions of the International Codes shall be an alternative to the specific requirements of this code. Where the alternative material, design or method of construction is not approved, the building official shall respond in writing, stating the reasons why the alternative was not approved.

R110.2 Change in use. Changes in the character or use of an existing structure shall not be made except as specified in ~~Sections 3408 and 3409 of the *International California Building Code*.~~*Chapter 11 of the California Fire code and California Existing Building Code*.

CHAPTER 2
DEFINITIONS

R201.3 Terms defined in other codes. Where terms are not defined in this code such terms shall have meanings ascribed in ~~other code publications of the International Code Council~~ *the California Building Standards Code, Title 24, California Code of Regulations.*

R201.4 Terms not defined. Where terms are not defined through the methods authorized by this section, such terms shall have ordinarily accepted meanings such as the context implies.

For applications listed in Section 1.11 regulated by the Office of the State Fire Marshal, where terms are not defined through the methods authorized by this section, such terms shall have ordinarily accepted meanings such as the

context implies. Webster's Third New International Dictionary of the English Language, Unabridged, shall be considered as providing ordinarily accepted meanings.

AGED HOME OR INSTITUTION. *A facility used for the housing of persons 65 years of age or older in need of care and supervision. (See definition of "care and supervision")*

APPROVED AGENCY. An established and recognized agency that is regularly engaged in conducting tests or furnishing inspection services, where such agency has been *approved* by the *building official. "Approved agency" shall mean "Listing agency" and "Testing agency."*

APPROVED LISTING AGENCY. *Any agency approved by the enforcing agency, unless otherwise provided by statute, which is in the business of listing and labeling and which makes available at least an annual published report of such listings in which specific information is included that the product has been tested to recognized standards and found to comply.*

APPROVED TESTING AGENCY. *Any agency which is determined by the enforcing agency, except as otherwise provided by statute, to have adequate personnel and expertise to carry out the testing of systems, materials, and construction fixtures or appliances.*

BEDRIDDEN PERSON. *A person, requiring assistance in turning and repositioning in bed, or being unable to independently transfer to and from bed, except in facilities with appropriate and sufficient care staff, mechanical devices if necessary, and safety precautions as determined in Title 22 regulations, by the Director of Social Services or his or her designated representative. Persons who are unable to independently transfer to and from bed, but who do not need assistance to turn or reposition in bed, shall be considered nonambulatory.*

The Director of Social Services or his or her designated representative shall make the determination of the bedridden status of persons with developmental disabilities, in consultation with the Director of Developmental Services or his or her designated representative.

The Director of Social Services or his or her designated representative shall make the determination of the bedridden status of all other persons with disabilities who are not developmentally disabled.

BUILDING. Building shall mean any one- and two-family dwelling or portion thereof, including *townhouses*, that is used, or designed or intended to be used for human habitation, for living, sleeping, cooking or eating purposes, or any combination thereof, and shall include accessory structures thereto.

Exceptions: *For applications listed in Section 1.8.1 regulated by the Department of Housing and Community Development, "Building" shall not include the following:*

1. Any mobilehome as defined in Health and Safety Code Section 18008.
2. Any manufactured home as defined in Health and Safety Code Section 18007.
3. Any commercial modular as defined in Health and Safety Code Section 18001.8 or any special purpose commercial modular as defined in Section 18012.5.
4. Any recreational vehicle as defined in Health and Safety Code Section 18010.
5. Any multifamily manufactured home as defined in Health and Safety Code Section 18008.7.

For additional information, see Health and Safety Code Section 18908.

Note: *Building shall have the same meaning as defined in Health and Safety Code Sections 17920 and 18908 for the applications specified in Section 1.11.*

CARE AND SUPERVISION. *Any one or more of the following activities provided by a person or facility to meet the needs of the clients:*

Assistance in dressing, grooming, bathing and other personal hygiene
Assistance with taking medication
Central storing and/or distribution of medications
Arrangement of and assistance with medical and dental care

Maintenance of house rules for the protection of clients
Supervision of client schedules and activities
Maintenance and/or supervision of client cash resources or property
Monitoring food intake or special diets
Providing basic services required by applicable law and regulation to be provided by the licensee in order to obtain and maintain a community-care facility license

CATASTROPHICALLY INJURED, *A person whose origin of disability was acquired through trauma or nondegenerative neurologic illness, for whom it has been determined by the Department of Health Services Certification and Licensing that active rehabilitation would be beneficial.*

CHILD-CARE CENTER. *Any facility of any capacity other than a large or small family day-care home as defined in these regulations in which less than 24-hour-per-day nonmedical supervision is provided for children in a group setting.*

CHILD OR CHILDREN. *A person or persons under the age of 18 years.*

CHRONICALLY ILL. *See "TERMINALLY ILL."*

CONGREGATE RESIDENCE. *Any building or portion thereof that contains facilities for living, sleeping and sanitation, as required by this code, and may include facilities for eating and cooking, for occupancy by other than a family. A congregate residence may be a shelter, convent, monastery, dormitory, fraternity or sorority house, but does not include jails, hospitals, nursing homes, hotels or lodging houses.*

DAY-CARE *shall, for the purposes of these regulations, mean the care of persons during any period of a 24-hour day where permanent sleeping accommodations are not provided.*

Note: *"Day-care" shall not be construed to preclude the use of cots or mats for napping purposes, provided all employees, attendants and staff personnel are awake and on duty in the area where napping occurs.*

DAY-CARE HOME, FAMILY. *A home that regularly provides care, protection and supervision for 14 or fewer children, in the provider's own home, for periods of less than 24 hours per day, while the parents or guardians are away, and is either a large family day-care home or a small family day-care home.*

DAY-CARE HOME, LARGE FAMILY. *A provider's own home which is licensed to provide day care for periods less than 24 hours per day for nine to 14 persons, including children under the age of 10 years who reside at the home.*

DAY-CARE HOME, SMALL FAMILY. *A home which provides family day-care to eight or fewer children, including children under the age of 10 years who reside at the home, in the provider's own home, for periods of less than 24 hours per day. Small family day-care homes are exempted from state fire and life safety regulations other than those state and local standards applicable to Group R-3 Occupancies. [See Health and Safety Code, Section 13143 (b).]*

ENFORCING AGENCY. *The designated department or agency as specified by statute or regulation.*

FULL-TIME CARE *shall mean the establishment and routine care of persons on an hourly, daily, weekly, monthly, yearly or permanent basis, whether for 24-hours per day or less, and where sleeping accommodations are provided.*

INFANT, *for the purpose of these regulations, shall mean any child who because of age only, is unable to walk and requires the aid of another person to evacuate the building. In no case shall the term "infant" mean a child 2 years of age or older.*

LISTED. [SFM] *Equipment*, materials, products or services included in a list published by an organization acceptable to the code official and concerned with evaluation of products or services that maintains periodic inspection of production of *listed equipment* or materials or periodic evaluation of services and whose listing states either that the *equipment*, material, product or service meets identified standards or has been tested and found suitable for a specified purpose. *For applications listed in Section 1.11 regulated by the Office of the State Fire Marshal, "listed" shall also mean equipment or materials accepted by the state fire marshal as conforming to the provisions of the State Fire Marshal's regulations and which are included in a list published by the State Fire Marshal.*

NONAMBULATORY PERSONS *are persons unable to leave a building unassisted under emergency conditions. It includes, but is not limited to, persons who depend on mechanical aids such as crutches, walkers and wheelchairs and any person who is unable to physically and mentally respond to a sensory signal approved by the state fire marshal or an oral instruction relating to fire danger.*

The determination of ambulatory or nonambulatory status of persons with developmental disabilities shall be made by the Director of Social Services or his or her designated representative, in consultation with the director of Developmental Services or his or her designated representative. The determination of ambulatory or nonambulatory status of all other disabled persons placed after January 1, 1984, who are not developmentally disabled shall be made by the Director of Social Services or his or her designated representative.

NONCOMBUSTIBLE MATERIAL. ~~Materials that pass the test procedure for defining noncombustibility of elementary materials set forth in ASTM E 136~~. *Noncombustible as applied to building construction material means a material which, in the form in which it is used, is either one of the following:*

1. Material of which no part will ignite and burn when subjected to fire. Any material passing ASTM E 136 shall be considered noncombustible.
2. Material having a structural base of noncombustible material as defined in Item 1 above, with a surfacing material not over 1/8 inch (3.2 mm) thick which has a flame-spread index of 50 or less.

"Noncombustible" does not apply to surface finish materials. Material required to be noncombustible for reduced clearances to flues, heating appliances or other sources of high temperature shall refer to material conforming to Item 1. No material shall be classed as noncombustible which is subject to increase in combustibility or flame-spread index, beyond the limits herein established, through the effects of age, moisture or other atmospheric condition.

PROTECTIVE SOCIAL CARE FACILITY. *A facility housing persons, who are referred, placed or caused to be placed in the facility, by any governmental agency and for whom the services, or a portion thereof, are paid for by any governmental agency. These occupancies shall include, but are not limited to, those commonly referred to as "assisted living facilities," "social rehabilitation facilities," "certified family care homes," "out-of-home placement facilities" and "halfway houses."*

RESIDENTIAL CARE FACILITY FOR THE CHRONICALLY ILL (RCF/CI), *as termed, means a housing arrangement with a maximum capacity of 25 residents that provides a range of services to residents who have chronic, life-threatening illnesses.*

RESIDENTIAL CARE FACILITY FOR THE ELDERLY (RCFE), *as defined in Health and Safety Code Section 1569.2, shall mean a facility with a housing arrangement chosen voluntarily by persons 60 years of age or over, or their authorized representative, where varying levels and intensities of care and supervision, protective supervision or personal care are provided, based on their varying needs, as determined in order to be admitted and to remain in the facility. Persons under 60 years of age with compatible needs, as determined by the Department of Social Services in regulations, may be allowed to be admitted or retained in a residential-care facility for the elderly. Pursuant to Health and Safety Code Section 13133, regulations of the State Fire Marshal pertaining to Group R, Division 2 Occupancies classified as Residential Facilities (RF) and Residential-care Facilities for the Elderly (RCFE) shall apply uniformly throughout the state and no city, county, city and county, including a charter city or charter county, or fire protection district shall adopt or enforce any ordinance or local rule or regulation relating to fire and panic safety which is in consistent with these regulations. A city, county, city and county, including a charter city or charter county may pursuant to Health and Safety Code Section 13143.5, or a fire protection district may pursuant to Health and Safety Code Section 13869.7, adopt standards more stringent than those adopted by the State Fire Marshal that are reasonably necessary to accommodate local climate, geological or topographical conditions relating to roof coverings for Residential-care Facilities for the Elderly.*

RESIDENTIAL FACILITY (RF), *as defined in Section 1502 of the Health and Safety Code, shall mean any family home, group care facility or similar facility determined by the director of Social Services, for 24-hour nonmedical care of persons in need of personal services, supervision, or assistance essential for sustaining the activities of daily living or for the protection of the individual. Such facilities include small family homes and social rehabilitation facilities. Pursuant to Health and Safety Code Section 13133, regulations of the State Fire Marshal pertaining to Group R Occupancies classified as Residential Facilities (RF) and Residential-care Facilities for the Elderly (RCFE) shall apply*

uniformly throughout the state and no city, county, city and county, including a charter city or charter county, or fire protection district shall adopt or enforce any ordinance or local rule or regulation relating to fire and panic safety which is in consistent with these regulations. A city, county, city and county, including a charter city or charter county may pursuant to Health and Safety Code Section 13143.5, or a fire protection district may pursuant to Health and Safety Code Section 13869.7, adopt standards more stringent than those adopted by the State Fire Marshal that are reasonably necessary to accommodate local climate, geological or topographical conditions relating to roof coverings for Residential-care Facilities for the Elderly.

RESTRAINT. *The physical retention of a person within a room, cell or cell block by any means, or within the exterior walls of a building by means of locked doors inoperable by the person restrained. Restraint shall also mean the physical binding, strapping or similar restriction of any person in a chair, walker, bed or other contrivance for the purpose of deliberately restricting the free movement of ambulatory persons. Restraint shall not be construed to include nonambulatory persons nor shall it include the use of bandage material, strip sheeting or other fabrics or materials (soft ties) used to restrain persons in hospital-type beds or wheelchairs to prevent injury, provided an approved method of quick release is maintained. Facilities employing the use of soft ties, however, shall be classified as a building used to house nonambulatory persons. Restraint shall not be practiced in licensed facilities classified as Group I-1, R-3.1 and R-4 occupancies unless constructed as a Group I-3 occupancy. For Group I-3 Occupancies see Section ~~308.4~~308.5 of the California Building Code.*

STATE-OWNED/LEASED BUILDING. *A building or portion of a building that is owned, leased or rented by the state. State-leased buildings shall include all required exits to a public way serving such leased area or space. Portions of state leased buildings that are not leased or rented by the state shall not be included within the scope of this section unless such portions present an exposure hazard to the state-leased area or space.*

TERMINALLY ILL, *as termed for an individual, means the individual has a life expectancy of six months or less as stated in writing by his or her attending physician and surgeon.*

CHAPTER 3
BUILDING PLANNING

R301.1 Application. Buildings and structures, and parts thereof, shall be constructed to safely support all loads, including dead loads, live loads, roof loads, flood loads, snow loads, wind loads and seismic loads as prescribed by this code. The construction of buildings and structures in accordance with the provisions of this code shall result in a system that provides a complete load path that meets the requirements for the transfer of loads from their point of origin through the load-resisting elements to the foundation. Buildings and structures constructed as prescribed by this code are deemed to comply with the requirements of this section.

Existing buildings housing existing protective social care homes or facilities established prior to 1972 (see ~~Section 3413 of the California Building Code~~Chapter 11 of the California Fire Code and the California Existing Building Code).

R302.1 Exterior walls. Construction, projections, openings and penetrations of exterior walls of dwellings and accessory buildings shall comply with Table R302.1(1); or dwellings *and accessory buildings* equipped throughout with an automatic sprinkler system installed in accordance with Section ~~P2904~~*R313* shall comply with Table R302.1(2).

Exceptions:
1. Walls, projections, openings or penetrations in walls perpendicular to the line used to determine the *fire separation distance*.
2. Walls of *dwellings* and *accessory structures* located on the same *lot*.
3. Detached tool sheds and storage sheds, playhouses and similar structures exempted from permits are not required to provide wall protection based on location on the *lot*. Projections beyond the *exterior wall* shall not extend over the *lot line*.
4. Detached garages accessory to a *dwelling* located within 2 feet (610 mm) of a *lot line* are permitted to have roof eave projections not exceeding 4 inches (102 mm).
5. Foundation vents installed in compliance with this code are permitted.

TABLE R302.1(2)

EXTERIOR WALLS—DWELLINGS ~~WITH FIRE SPRINKLERS~~ *AND ACCESSORY BUILDINGS WITH AUTOMATIC RESIDENTIAL FIRE SPRINKLER PROTECTION*

EXTERIOR WALL ELEMENT		MINIMUM FIRE-RESISTANCE RATING	MINIMUM FIRE SEPARATION DISTANCE
Walls	Fire-resistance rated	1 hour—tested in accordance with ASTM E 119 or UL 263 with exposure from the outside	0 feet
	Not fire-resistance rated	0 hours	3 feet[a]
Projections	Not allowed	N/A	< 2 feet
	Fire-resistance rated	1 hour on the underside[b, c]	2 feet[a]
	Not fire-resistance rated	0 hours	3 feet
Openings in walls	Not allowed	N/A	< 3 feet
	Unlimited	0 hours	3 feet[a]
Penetrations	All	Comply with Section R302.4	< 3 feet
		None required	3 feet[a]

For SI: 1 foot = 304.8 mm.
N/A = Not Applicable
a. For residential subdivisions where all dwellings *and accessory buildings* are equipped throughout with an automatic sprinkler system installed in accordance with Section ~~P2904~~*R313*, the fire separation distance for nonrated exterior walls and rated projections shall be permitted to be reduced to 0 feet, and unlimited unprotected openings and penetrations shall be permitted, where the adjoining lot provides an open setback yard that is 6 feet or more in width on the opposite side of the property line.
b. The roof eave fire-resistance rating shall be permitted to be reduced to 0 hours on the underside of the eave if fireblocking is provided from the wall top plate to the underside of the roof sheathing.
c. The roof eave fire-resistance rating shall be permitted to be reduced to 0 hours on the underside of the eave provided that gable vent openings are not installed.

R302.2 Townhouses. Common walls separating townhouses shall be assigned a fire-resistance rating in accordance with Section R302.2, Item 1 or 2. The common wall shared by two townhouses shall be constructed without plumbing or mechanical equipment, ducts or vents in the cavity of the common wall. The wall shall be rated for fire exposure from both sides and shall extend to and be tight against exterior walls and the underside of the roof sheathing. Electrical installations shall be in accordance with ~~Chapters 34 through 43~~ *the California Electrical Code*. Penetrations of the membrane of common walls for electrical outlet boxes shall be in accordance with Section R302.4.

1. Where a fire sprinkler system in accordance with Section ~~P2904~~*R313* is provided, the common wall shall be not less than a 1-hour fire-resistance-rated wall assembly tested in accordance with ASTM E 119 or UL 263.
2. Where a fire sprinkler system in accordance with Section ~~P2904~~*R313* is not provided, the common wall shall be not less than a 2-hour fire-resistance-rated wall assembly tested in accordance with ASTM E 119 or UL 263.

R302.5.1 Opening protection. Openings from a private garage directly into a room used for sleeping purposes shall not be permitted. Other openings between the garage and residence shall be equipped with solid wood doors not less than 13/8 inches (35 mm) in thickness, solid or honeycomb-core steel doors not less than 13/8 inches (35 mm) thick, or 20-minute fire-rated doors, equipped with a self-closing *and self-latching* devices.

Exception: *Where the residence and the private garage are protected by an automatic residential fire sprinkler system in accordance with Sections R309.6 and R313, other door openings between the private garage and the residence need only be self-closing and self-latching. This exception shall not apply to rooms used for sleeping purposes.*

R302.6 Dwelling/garage *and/or carport* fire separation. The garage *and/or carport* shall be separated as required by Table R302.6. Openings in garage walls shall comply with Section R302.5. Attachment of gypsum board shall comply with Table R702.3.5. The wall separation provisions of Table R302.6 shall not apply to garage walls that are

perpendicular to the adjacent dwelling unit wall. *A separation is not required between the dwelling unit and a carport, provided the carport is entirely open on two or more sides and there are not enclosed areas above.*

TABLE R302.6
DWELLING-GARAGE *AND/OR CARPORT* SEPARATION

SEPARATION	MATERIAL
From the residence and attics	Not less than 1/2-inch gypsum board or equivalent applied to the garage side
From all habitable rooms above the garage *or carport*	Not less than 5/8-inch Type X gypsum board or equivalent
Structure(s) supporting floor/ceiling assemblies used for separation required by this section	Not less than 1/2-inch gypsum board or equivalent
Garages located less than 3 feet from a dwelling unit on the same lot	Not less than 1/2-inch gypsum board or equivalent applied to the interior side of exterior walls that are within this area

For SI: 1 inch = 25.4 mm, 1 foot = 304.8 mm.

R302.9.5 Stability. *Interior finish materials regulated by this chapter shall be applied or otherwise fastened in such a manner that such materials will not readily become detached where subjected to room temperatures of 200°F (93°C) for not less than 30 minutes.*

[Editorial Note: Relocated from R501.3 in model code.]
R302.13 Fire protection of floors. Floor assemblies that are not required elsewhere in this code to be fire-resistance rated, shall be provided with a 1/2-inch (12.7 mm) gypsum wallboard membrane, 5/8-inch (16 mm) wood structural panel membrane, or equivalent on the underside of the floor framing member. Penetrations or openings for ducts, vents, electrical outlets, lighting, devices, luminaires, wires, speakers, drainage, piping and similar openings or penetrations shall be permitted.

Exceptions:

1. Floor assemblies located directly over a space protected by an automatic sprinkler system in accordance with Section ~~P2904~~*R313*, NFPA 13D, or other approved equivalent sprinkler system.
2. Floor assemblies located directly over a crawl space not intended for storage or fuel-fired appliances.
3. Portions of floor assemblies shall be permitted to be unprotected where complying with the following:

3.1. The aggregate area of the unprotected portions does not exceed 80 square feet (7.4 m2) per story
3.2. Fireblocking in accordance with Section R302.11.1 is installed along the perimeter of the unprotected portion to separate the unprotected portion from the remainder of the floor assembly.

4. Wood floor assemblies using dimension lumber or structural composite lumber equal to or greater than 2-inch by 10-inch (50.8 mm by 254 mm) nominal dimension, or other approved floor assemblies demonstrating equivalent fire performance.

R302.14 Combustible insulation clearance. Combustible insulation shall be separated not less than 3 inches (76 mm) from recessed luminaires, fan motors and other heat-producing devices.

Exception: Where heat-producing devices are listed for lesser clearances, combustible insulation complying with the listing requirements shall be separated in accordance with the conditions stipulated in the listing.

Recessed luminaires installed in the building ~~thermal~~ envelope shall meet *or exceed* the requirements ~~of Section N1102.4.3~~ *specified in the California Energy Code for recessed luminaires installed in insulated ceilings.*

R309.5 Fire sprinklers *location on property.* Private garages shall be protected by fire sprinklers where the garage wall has been designed based on Table R302.1(2), Footnote a. Sprinklers in garages shall be connected to an automatic sprinkler system that complies with Section ~~P2904~~*R313*. Garage sprinklers shall be residential sprinklers or quick-response sprinklers, designed to provide a density of 0.05 gpm/ft2. Garage doors shall not be considered obstructions with respect to sprinkler placement.

R309.6 Fire Sprinklers Attached garages, and carports with habitable space above. *Attached garages, and carports with habitable space above shall be protected by fire sprinklers in accordance with this Section and Section R313. Protection shall be provided in accordance with one of the following:*

1. Residential Sprinklers installed in accordance with their listing.
2. Extended Coverage sprinklers discharging water not less than their listed flow rate for Light Hazard in accordance with NFPA 13.
3. Quick-Response spray sprinklers at light hazard spacing in accordance with NFPA 13 designed to discharge at 0.05 gpm/ft2 density (minimum).

The system demand shall be permitted to be limited to the number of sprinklers in the compartment but shall not exceed two sprinklers for hydraulic calculation purposes. Garage doors shall not be considered obstructions and shall be permitted to be ignored for placement and calculation of sprinklers.

Exception: *An automatic residential fire sprinkler system shall not be required when additions or alterations are made to existing carports and/or garages that do not have an automatic residential fire sprinkler system installed in accordance with this Section.*

R310.1.1 Operational constraints and opening control devices. Emergency escape and rescue openings shall be *maintained free of any obstructions other than those allowed by this section and shall be* operational from the inside of the room without the use of keys, tools or special knowledge. Window opening control devices complying with ASTM F 2090 shall be permitted for use on windows serving as a required emergency escape and rescue opening.

~~**R310.2.4 Emergency escape and rescue openings under decks and porches.** Emergency escape and rescue openings shall be permitted to be installed under decks and porches provided that the location of the deck allows the emergency escape and rescue openings to be fully opened and provides a path not less than 36 inches (914 mm) in height to a yard or court.~~

R310.4 Bars, grilles, covers and screens. Bars, grilles, covers, screens or similar devices are permitted to be placed over emergency escape and rescue openings, bulkhead enclosures, or window wells that serve such openings, provided the minimum net clear opening size complies with Sections R310.1.1 to R310.1.3, and such devices shall be releasable or removable from the inside without the use of a key, tool, special knowledge or force greater than that required for the normal operation of the escape and rescue opening. *The release mechanism shall be maintained operable at all times.*

Such bars, grills, grates or any similar devices shall be equipped with an approved exterior release device for use by the fire department only when required by the authority having jurisdiction.

Where security bars (burglar bars) are installed on emergency egress and rescue windows or doors, on or after July 1, 2000, such devices shall comply with California Building Standards Code, Part 12, Chapter 12-3 and other applicable provisions of this code.

R311.4 Vertical egress. Egress from habitable levels including habitable attics and *basements* not provided with an egress door in accordance with Section R311.2 shall be by ~~a ramp~~ *one or more ramps* in accordance with Section R311.8 or ~~a stairway~~ *one or more stairways* in accordance with Section R311.7 or both. *For habitable levels or basements located more than one story above or more than one story below an egress door, the maximum travel distance from any occupied point to a stairway or ramp that provides egress from such habitable level or basement, shall not exceed 50 feet (15 240 mm).*

R312.1.2 Height. Required *guards* at open-sided walking surfaces, including stairs, porches, balconies or landings, shall be not less than ~~36 inches (914 mm)~~ *42 inches (1067 mm)* in height as measured vertically above the adjacent walking surface or the line connecting the leading edges of the treads.

Exceptions:
1. Guards on the open sides of stairs shall have a height not less than 34 inches (864 mm) measured vertically from a line connecting the leading edges of the treads.

2. Where the top of the guard serves as a handrail on the open sides of stairs, the top of the guard shall be not less than 34 inches (864 mm) and not more than 38 inches (965 mm) measured vertically from a line connecting the leading edges of the treads.

R313.1 Townhouse automatic fire sprinkler systems. An automatic residential fire sprinkler system shall be installed in *townhouses.*

Exception: An automatic residential fire sprinkler system shall not be required where additions or alterations are made to existing townhouses that do not have an automatic residential fire sprinkler system installed.

R313.1.1 Design and installation. Automatic residential fire sprinkler systems for *townhouses* shall be designed and installed in accordance with Section ~~P2904~~*R313.3 or NFPA 13D.*

R313.2 One- and two-family dwellings automatic fire systems. An automatic residential fire sprinkler system shall be installed in one- and two-family dwellings.

Exception: An automatic residential fire sprinkler system shall not be required for *additions* or *alterations* to existing buildings that are not already provided with an automatic residential sprinkler system.

R313.2.1 Design and installation. Automatic residential fire sprinkler systems shall be designed and installed in accordance with Section ~~P2904~~*R313.3* or NFPA 13D.

R313.3 Dwelling unit fire sprinkler systems.

***R313.3.1* General.** The design and installation of residential fire sprinkler systems shall be in accordance with NFPA 13D or Section *R313.3*, which shall be considered equivalent to NFPA 13D. Partial residential sprinkler systems shall be permitted to be installed only in buildings not required to be equipped with a residential sprinkler system. Section *R313.3* shall apply to stand-alone and multipurpose wet-pipe sprinkler systems that do not include the use of antifreeze. A multipurpose fire sprinkler system shall provide domestic water to both fire sprinklers and plumbing fixtures. A stand-alone sprinkler system shall be separate and independent from the water distribution system. ~~A backflow preventer shall not be required to separate a stand-alone sprinkler system from the water distribution system.~~

R313.3.1.1 Backflow protection. *A backflow preventer shall not be required to separate a sprinkler system from the water distribution system, provided that:*
1. The system complies with NFPA 13D or Section R313, and
2. Piping material are suitable for potable water in accordance with the California Plumbing Code, and
3. The system does not contain antifreeze or have a fire department connection.

***R313.3.1.2* Required sprinkler locations.** Sprinklers shall be installed to protect all areas of a dwelling unit.

Exceptions:
1. Attics, crawl spaces and normally unoccupied concealed spaces that do not contain fuel-fired appliances do not require sprinklers. In attics, crawl spaces and normally unoccupied concealed spaces that contain fuel-fired equipment, a sprinkler shall be installed above the equipment; however, sprinklers shall not be required in the remainder of the space.
2. Clothes closets, linen closets and pantries not exceeding 24 square feet (2.2 m2) in area, with the smallest dimension not greater than 3 feet (915 mm) and having wall and ceiling surfaces of gypsum board.
3. Bathrooms not more than 55 square feet (5.1m2) in area.
4. *Detached* ~~G~~garages; carports *with no habitable space above*; *open attached* ~~exterior~~ porches; unheated entry areas, such as mud rooms, that are adjacent to an exterior door; and similar areas

***R313.3.2* Sprinklers.** Sprinklers shall be new listed residential sprinklers and shall be installed in accordance with the sprinkler manufacturer's instructions.

***R313.3.2.1* Temperature rating and separation from heat sources.** Except as provided for in Section *R313.3.2.2*, sprinklers shall have a temperature rating of not less than 135°F (57°C) and not more than 170°F (77°C). Sprinklers shall be separated from heat sources as required by the sprinkler manufacturer's installation instructions.

Part III—Building Planning and Construction

CHAPTER 3

BUILDING PLANNING

SECTION R301
DESIGN CRITERIA

R301.1 Application. Buildings and structures, and parts thereof, shall be constructed to safely support all loads, including dead loads, live loads, roof loads, flood loads, snow loads, wind loads and seismic loads as prescribed by this code. The construction of buildings and structures in accordance with the provisions of this code shall result in a system that provides a complete load path that meets the requirements for the transfer of loads from their point of origin through the load-resisting elements to the foundation. Buildings and structures constructed as prescribed by this code are deemed to comply with the requirements of this section.

R301.1.1 Alternative provisions. As an alternative to the requirements in Section R301.1, the following standards are permitted subject to the limitations of this code and the limitations therein. Where engineered design is used in conjunction with these standards, the design shall comply with the *International Building Code*.

1. AF&PA *Wood Frame Construction Manual* (WFCM).
2. AISI *Standard for Cold-Formed Steel Framing—Prescriptive Method for One- and Two-Family Dwellings* (AISI S230).
3. ICC *Standard on the Design and Construction of Log Structures* (ICC 400).

R301.1.2 Construction systems. The requirements of this code are based on platform and balloon-frame construction for light-frame buildings. The requirements for concrete and masonry buildings are based on a balloon framing system. Other framing systems must have equivalent detailing to ensure force transfer, continuity and compatible deformations.

R301.1.3 Engineered design. Where a building of otherwise conventional construction contains structural elements exceeding the limits of Section R301 or otherwise not conforming to this code, these elements shall be designed in accordance with accepted engineering practice. The extent of such design need only demonstrate compliance of nonconventional elements with other applicable provisions and shall be compatible with the performance of the conventional framed system. Engineered design in accordance with the *International Building Code* is permitted for buildings and structures, and parts thereof, included in the scope of this code.

R301.2 Climatic and geographic design criteria. Buildings shall be constructed in accordance with the provisions of this code as limited by the provisions of this section. Additional criteria shall be established by the local *jurisdiction* and set forth in Table R301.2(1).

R301.2.1 Wind design criteria. Buildings and portions thereof shall be constructed in accordance with the wind provisions of this code using the ultimate design wind speed in Table R301.2(1) as determined from Figure R301.2(4)A. The structural provisions of this code for wind loads are not permitted where wind design is required as specified in Section R301.2.1.1. Where different construction methods and structural materials are used for various portions of a building, the applicable requirements of this section for each portion shall apply. Where not otherwise specified, the wind loads listed in Table R301.2(2) adjusted for height and exposure using Table R301.2(3) shall be used to determine design load performance requirements for wall coverings, curtain walls, roof coverings, exterior windows, skylights, garage doors and exterior doors. Asphalt shingles shall be designed for wind speeds in accordance with Section R905.2.4. A continuous load path shall be provided to transmit the applicable uplift forces in Section R802.11.1 from the roof assembly to the foundation.

R301.2.1.1 Wind limitations and wind design required. The wind provisions of this code shall not apply to the design of buildings where wind design is required in accordance with Figure R301.2(4)B.

Exceptions:

1. For concrete construction, the wind provisions of this code shall apply in accordance with the limitations of Sections R404 and R608.
2. For structural insulated panels, the wind provisions of this code shall apply in accordance with the limitations of Section R610.
3. For cold-formed steel light-frame construction, the wind provisions of this code shall apply in accordance with the limitations of Sections R505, R603 and R804.

In regions where wind design is required in accordance with Figure R301.2(4)B, the design of buildings for wind loads shall be in accordance with one or more of the following methods:

1. AF&PA *Wood Frame Construction Manual* (WFCM).
2. ICC *Standard for Residential Construction in High-Wind Regions* (ICC 600).

3. ASCE *Minimum Design Loads for Buildings and Other Structures* (ASCE 7).
4. AISI *Standard for Cold-Formed Steel Framing—Prescriptive Method For One- and Two-Family Dwellings* (AISI S230).
5. *International Building Code.*

The elements of design not addressed by the methods in Items 1 through 5 shall be in accordance with the provisions of this code.

Where ASCE 7 or the *International Building Code* is used for the design of the building, the wind speed map and exposure category requirements as specified in ASCE 7 and the *International Building Code* shall be used.

R301.2.1.1.1 Sunrooms. Sunrooms shall comply with AAMA/NPEA/NSA 2100. For the purpose of applying the criteria of AAMA/NPEA/NSA 2100 based on the intended use, sunrooms shall be identified as one of the following categories by the permit applicant, design professional or the property owner or owner's agent in the construction documents. Component and cladding pressures shall be used for the design of elements that do not qualify as main windforce-resisting systems. Main windforce-resisting system pressures shall be used for the design of elements assigned to provide support and stability for the overall *sunroom.*

Category I: A thermally isolated sunroom with walls that are open or enclosed with insect screening or 0.5 mm (20 mil) maximum thickness plastic film. The space is nonhabitable and unconditioned.

Category II: A thermally isolated sunroom with enclosed walls. The openings are enclosed with translucent or transparent plastic or glass. The space is nonhabitable and unconditioned.

Category III: A thermally isolated sunroom with enclosed walls. The openings are enclosed with translucent or transparent plastic or glass. The sunroom fenestration complies with additional requirements for air infiltration resistance and water penetration resistance. The space is nonhabitable and unconditioned.

Category IV: A thermally isolated sunroom with enclosed walls. The sunroom is designed to be heated or cooled by a separate temperature control or system and is thermally isolated from the primary structure. The sunroom fenestration complies with additional requirements for water penetration resistance, air infiltration resistance and thermal performance. The space is nonhabitable and conditioned.

Category V: A sunroom with enclosed walls. The sunroom is designed to be heated or cooled and is open to the main structure. The sunroom fenestration complies with additional requirements for water penetration resistance, air infiltration resistance and thermal performance. The space is habitable and conditioned.

R301.2.1.2 Protection of openings. Exterior glazing in buildings located in windborne debris regions shall be protected from windborne debris. Glazed opening protection for windborne debris shall meet the requirements of the Large Missile Test of ASTM E 1996 and ASTM E 1886 as modified in Section 301.2.1.2.1. Garage door glazed opening protection for windborne debris shall meet the requirements of an *approved* impact-resisting standard or ANSI/DASMA 115.

Exception: Wood structural panels with a thickness of not less than $^7/_{16}$ inch (11 mm) and a span of not more than 8 feet (2438 mm) shall be permitted for opening protection. Panels shall be precut and attached to the framing surrounding the opening containing the product with the glazed opening. Panels shall be predrilled as required for the anchorage method and shall be secured with the attachment hardware provided. Attachments shall be designed to resist the component and cladding loads determined in accordance with either Table R301.2(2) or ASCE 7, with the permanent corrosion-resistant attachment hardware provided and anchors permanently installed on the building. Attachment in accordance with Table R301.2.1.2 is permitted for buildings with a *mean roof height* of 45 feet (13, 728 mm) or less where the ultimate design wind speed, V_{ult}, is 180 mph (290 kph) or less.

For SI: 1 inch = 25.4 mm, 1 foot = 304.8 mm.

FIGURE ~~P2904.2.4.2~~*R313.3.2.4.2*
MINIMUM ALLOWABLE DISTANCE BETWEEN SPRINKLER AND OBSTRUCTION

***R313.3.2.4.2.1* Additional requirements for pendent sprinklers.** Pendent sprinklers within 3 feet (915 mm) of the center of a ceiling fan, surface- mounted ceiling luminaire or similar object shall be considered to be obstructed, and additional sprinklers shall be installed.

***R313.3.2.4.2.2* Additional requirements for sidewall sprinklers.** Sidewall sprinklers within 5 feet (1524 mm) of the center of a ceiling fan, surface- mounted ceiling luminaire or similar object shall be considered to be obstructed, and additional sprinklers shall be installed.

***R313.3.2.5* Sprinkler installation on systems assembled with solvent cement.** The solvent cementing of threaded adapter fittings shall be completed and threaded adapters for sprinklers shall be verified as being clear of excess cement prior to the installation of sprinklers on systems assembled with solvent cement.

***R313.3.2.6* Sprinkler modifications prohibited.** Painting, caulking or modifying of sprinklers shall be prohibited. Sprinklers that have been painted, caulked, modified or damaged shall be replaced with new sprinklers.

TABLE *R313.3.2.2*
LOCATIONS WHERE INTERMEDIATE TEMPERATURE SPRINKLERS ARE REQUIRED

HEAT SOURCE	RANGE OF DISTANCE FROM HEAT SOURCE WITHIN WHICH INTERMEDIATE TEMPERATURE SPRINKLERS ARE REQUIREDa,b (inches)
Fireplace, side of open or recessed fireplace	12 to 36
Fireplace, front of recessed fireplace	36 to 60
Coal and wood burning stove	12 to 42
Kitchen range top	9 to 18
Oven	9 to 18
Vent connector or chimney connector	9 to 18
Heating duct, not insulated	9 to 18
Hot water pipe, not insulated	6 to 12
Side of ceiling or wall warm air register	12 to 24
Front of wall mounted warm air register	18 to 36
Water heater, furnace or boiler	3 to 6
Luminaire up to 250 watts	3 to 6
Luminaire 250 watts up to 499 watts	6 to 12

For SI: 1 inch = 25.4 mm.
a. Sprinklers shall not be located at distances less than the minimum table distance unless the sprinkler listing allows a lesser distance.
b. Distances shall be measured in a straight line from the nearest edge of the heat source to the nearest edge of the sprinkler.

***R313.3.3* Sprinkler piping system.** Sprinkler piping shall be supported in accordance with requirements for cold water distribution piping. Sprinkler piping shall comply with the requirements for cold water distribution piping. For multipurpose piping systems, the sprinkler piping shall connect to and be a part of the cold water distribution piping system.

Exception: For plastic piping, it shall be permissible to follow the manufacturer's installation instructions.

***R313.3.3.1* Nonmetallic pipe and tubing.** Nonmetallic pipe and tubing, such as CPVC, PEX, and PE-RT shall be listed for use in residential fire sprinkler systems.

R313.3.3.1.1 Nonmetallic pipe protection. Nonmetallic pipe and tubing systems shall be protected from exposure to the living space by a layer of not less than 3/8 inch-thick (9.5 mm) gypsum wallboard, 1/2 inch thick (13 mm) plywood, or other material having a 15-minute fire rating.

Exceptions:
1. Pipe protection shall not be required in areas that do not require protection with sprinklers as specified in Section *R313.3.1.2.*
2. Pipe protection shall not be required where exposed piping is permitted by the pipe listing.

***R313.3.3.2* Shutoff valves prohibited.** With the exception of shutoff valves for the entire water distribution system, valves shall not be installed in any location where the valve would isolate piping serving one or more sprinklers.

***R313.3.3.3* Single dwelling limit.** Piping beyond the service valve located at the beginning of the water distribution system shall not serve more than one *dwelling*.

***R313.3.3.4* Drain.** A means to drain the sprinkler system shall be provided on the system side of the water distribution shutoff valve.

***R313.3.4* Determining system design flow.** The flow for sizing the sprinkler piping system shall be based on the flow rating of each sprinkler in accordance with Section *R313.3.4.1* and the calculation in accordance with Section *R313.3.4.2.*

***R313.3.4.1* Determining required flow rate for each sprinkler.** The minimum required flow for each sprinkler shall be determined using the sprinkler manufacturer's published data for the specific sprinkler model based on all of the following:
1. The area of coverage.
2. The ceiling configuration.
3. The temperature rating.
4. Any additional conditions specified by the sprinkler manufacturer.

***R313.3.4.2* System design flow rate.** The design flow rate for the system shall be based on the following:
1. The design flow rate for a room having only one sprinkler shall be the flow rate required for that sprinkler, as determined by Section *R313.3.4.1.*
2. The design flow rate for a room having two or more sprinklers a shall be determined by identifying the sprinkler in that room with the highest required flow rate, based on Section *R313.3.4.1,* and multiplying that flow rate by 2.
3. Where the sprinkler manufacturer specifies different criteria for ceiling configurations that are not smooth, flat and horizontal, the required flow rate for that room shall comply with the sprinkler manufacturer's instructions.
4. The design flow rate for the sprinkler system shall be the flow required by the room with the largest flow rate, based on Items 1, 2 and 3.
5. For the purpose of this section, it shall be permissible to reduce the design flow rate for a room by subdividing the space into two or more rooms, where each room is evaluated separately with respect to the required design flow rate. Each room shall be bounded by walls and a ceiling. Openings in walls shall have a lintel not less than 8 inches (203 mm) in depth and each lintel shall form a solid barrier between the ceiling and the top of the opening.

***R313.3.5* Water supply.** The water supply shall provide not less than the required design flow rate for sprinklers in accordance with Section *R313.3.4.2* at a pressure not less than that used to comply with Section *R313.3.6. Where a water supply serves both domestic and fire sprinkler systems, 5 gpm (19 L/min) shall be added to the sprinkler system demand at the point where the systems are connected, to determine the size of common piping and the size of the total water supply requirements where no provision is made to prevent flow into the domestic water system upon operation of a sprinkler.*

***R313.3.5.1* Water supply from individual sources.** Where a dwelling unit water supply is from a tank system, a private well system, *a pump*, or a combination of these, the available water supply shall be based on the minimum pressure control setting for the pump.

***R313.3.5.2* Required capacity.** The water supply shall have the capacity to provide the required design flow rate for sprinklers for a period of time as follows:

1. Seven minutes for dwelling units one story in height and less than 2,000 square feet (186 m2) in area. *For the purpose of determining the area of the dwelling unit, the area of attached garages and attached open carports, porches, balconies and patios shall not be included.*
2. Ten minutes for dwelling units two or more stories in height or equal to or greater than 2,000 square feet (186 m2) in area. *For the purpose of determining the area of the dwelling unit, the area of attached garages and attached open carports, porches, balconies, and patios shall not be included.*

Where a well system, a water supply tank system, *a pump*, or a combination thereof is used, *the water supply shall serve both domestic and fire sprinkler systems.* Any combination of well capacity and tank storage shall be permitted to meet the capacity requirement.

[Editors note- 3.15.3.5.3 and R313.3.5.3.1 should be shown as model code text, not italicized. Code sections are from 2015 IRC P2902.5.4 and P2902.5.4.1]
R313.3.5.3 Connections to automatic fire sprinkler systems. The potable water supply to automatic fire sprinkler systems shall be protected against backflow by a double check backflow prevention assembly, a double check fire protection backflow prevention assembly, a reduced pressure principle backflow prevention assembly or a reduced pressure principle fire protection backflow prevention assembly.

Exception: ~~Where systems are installed as a portion of the water distribution system in accordance with the requirements of this code and are not provided with a fire department connection~~ *Where permitted by Section R313.3.1.1,* backflow protection for the water supply system shall not be required.

R313.3.5.3.1 Additives or nonpotable source. Where systems contain chemical additives or antifreeze, or where systems are connected to a nonpotable secondary water supply, the potable water supply shall be protected against backflow by a reduced pressure principle backflow prevention assembly or a reduced pressure principle fire protection backflow prevention assembly. Where chemical additives or antifreeze is added to only a portion of an automatic fire sprinkler or standpipe system, the reduced pressure principle fire protection backflow preventer shall be permitted to be located so as to isolate that portion of the system.

***R313.3.6* Pipe sizing.** The piping to sprinklers shall be sized for the flow required by Section *R313.3.4.2.* The flow required to supply the plumbing fixtures shall not be required to be added to the sprinkler design flow.

***R313.3.6.1* Method of sizing pipe.** Piping supplying sprinklers shall be sized using the prescriptive method in Section *R313.3.6.2* or by hydraulic calculation in accordance with NFPA 13D. The minimum pipe size from the water supply source to any sprinkler shall be 3/4 inch (19 mm) nominal. Threaded adapter fittings at the point where sprinklers are attached to the piping shall be not less than 1/2 inch (13 mm) nominal.

***R313.3.6.2* Prescriptive pipe sizing method.** Pipe shall be sized by determining the available pressure to offset friction loss in piping and identifying a piping material, diameter and length using the equation in Section *R313.3.6.2.1* and the procedure in Section *R313.3.6.2.2.*

***R313.3.6.2.1* Available pressure equation.** The pressure available to offset friction loss in the interior piping system (*Pt*) shall be determined in accordance with the Equation 29-1.

$Pt = Psup - PLsvc - PLm - PLd - PLe - Psp$ **(Equation 29-1)**

where:

Pt = Pressure used in applying Tables *R313.3.6.2(4)* through *R313.3.6.2(9).*
Psup = Pressure available from the water supply source.
PLsvc= Pressure loss in the water-service pipe.
PLm = Pressure loss in the water meter.
PLd = Pressure loss from devices other than the water meter.
PLe = Pressure loss associated with changes in elevation.
Psp = Maximum pressure required by a sprinkler.

***R313.3.6.2.2* Calculation procedure.** Determination of the required size for water distribution piping shall be in accordance with the following procedure:

Step 1–Determine *Psup*
Obtain the static supply pressure that will be available from the water main from the water purveyor, or for an individual source, the available supply pressure shall be in accordance with Section *R313.3.5.1*.

Step 2–Determine *PLsvc*
Use Table *R313.3.6.2(1)* to determine the pressure loss in the water service pipe based on the selected size of the water service.

Step 3–Determine *PLm*
Use Table *R313.3.6.2(2)* to determine the pressure loss from the water meter, based on the selected water meter size.

Step 4–Determine *PLd*
Determine the pressure loss from devices other than the water meter installed in the piping system supplying sprinklers, such as pressure-reducing valves, backflow preventers, water softeners or water filters. Device pressure losses shall be based on the device manufacturer's specifications. The flow rate used to determine pressure loss shall be the rate from Section *R313.3.4.2*, except that 5 gpm (0.3 L/s) shall be added where the device is installed in a water-service pipe that supplies more than one dwelling. As alternative to deducting pressure loss for a device, an automatic bypass valve shall be installed to divert flow around the device when a sprinkler activates.

Step 5 – Determine *PLe*
Use Table *R313.3.6.2(3)* to determine the pressure loss associated with changes in elevation. The elevation used in applying the table shall be the difference between the elevation where the water source pressure was measured and the elevation of the highest sprinkler.

Step 6 – Determine *Psp*
Determine the maximum pressure required by any individual sprinkler based on the flow rate from Section *R313.3.4.1*. The required pressure is provided in the sprinkler manufacturer's published data for the specific sprinkler model based on the selected flow rate.

Step 7 – Calculate *Pt*
Using Equation 29-1, calculate the pressure available to offset friction loss in water-distribution piping between the service valve and the sprinklers.

Step 8 –Determine the maximum allowable pipe length
Use Tables *R313.3.6.2(4)* through *R313.3.6.2(9)* to select a material and size for water distribution piping. The piping material and size shall be acceptable if the *developed length* of pipe between the service valve and the most remote sprinkler does not exceed the maximum allowable length specified by the applicable table. Interpolation of *Pt* between the tabular values shall be permitted.

The maximum allowable length of piping in Tables *R313.3.6.2(4)* through *R313.3.6.2(9)* incorporates an adjustment for pipe fittings. Additional consideration of friction losses associated with pipe fittings shall not be required.

***R313.3.7* Instructions and signs.** An owner's manual for the fire sprinkler system shall be provided to the owner. A sign or valve tag shall be installed at the main shutoff valve to the water distribution system stating the following: "Warning, the water system for this home supplies fire sprinklers that require certain flows and pressures to fight a fire. Devices that restrict the flow or decrease the pressure or automatically shut off the water to the fire sprinkler system, such as water softeners, filtration systems and automatic shutoff valves, shall not be added to this system without a review of the fire sprinkler system by a fire protection specialist. Do not remove this sign."

***R313.3.8* Inspections.** The water distribution system shall be inspected in accordance with Sections *R313.3.8.1* and *R313.3.8.2*.

***R313.3.8.1* Preconcealment inspection.** The following items shall be verified prior to the concealment of any sprinkler system piping:

1. Sprinklers are installed in all areas as required by Section ~~*R313.3.1.1*~~ *R313.3.1.2*
2. Where sprinkler water spray patterns are obstructed by construction features, luminaires or ceiling fans, additional sprinklers are installed as required by Section *R313.3.2.4.2*.
3. Sprinklers are the correct temperature rating and are installed at or beyond the required separation distances from heat sources as required by Sections *R313.3.2.1* and *R313.3.2.2*.
4. The pipe size equals or exceeds the size used in applying Tables *R313.3.6.2(4)* through *R313.3.6.2(9)* or, if the piping system was hydraulically calculated in accordance with Section *R313.3.6.1*, the size used in the hydraulic calculation.
5. The pipe length does not exceed the length permitted by Tables *R313.3.6.2(4)* through *R313.3.6.2(9)* or, if the piping system was hydraulically calculated in accordance with Section R313.3.6.1, pipe lengths and fittings do not exceed those used in the hydraulic calculation.
6. Nonmetallic piping that conveys water to sprinklers is listed for use with fire sprinklers.
7. Piping is supported in accordance with the pipe manufacturer's and sprinkler manufacturer's installation instructions.
8. The piping system is tested in accordance with *the California Plumbing Code*.

***R313.3.8.2* Final inspection.** The following items shall be verified upon completion of the system:

1. Sprinkler are not painted, damaged or otherwise hindered from operation.
2. Where a pump is required to provide water to the system, the pump starts automatically upon system water demand.
3. Pressure-reducing valves, water softeners, water filters or other impairments to water flow that were not part of the original design have not been installed.
4. The sign or valve tag required by Section *R313.3.7* is installed and the owner's manual for the system is present.

TABLE *R313.3.6.2(1)*
WATER SERVICE PRESSURE LOSS (PLsvc)a,b

FLOW RATEc (gpm)	3/4 INCH WATER SERVICE PRESSURE LOSS (psi)				1 INCH WATER SERVICE PRESSURE LOSS (psi)				11/4 INCH WATER SERVICE PRESSURE LOSS (psi)			
	Length of water service pipe (feet)				Length of water service pipe (feet)				Length of water service pipe (feet)			
	40 or less	41 to 75	76 to 100	101 to 150	40 or less	41 to 75	76 to 100	101 to 150	40 or less	41 to 75	76 to 100	101 to 150
8	5.1	8.7	11.8	17.4	1.5	2.5	3.4	5.1	0.6	1.0	1.3	1.9
10	7.7	13.1	17.8	26.3	2.3	3.8	5.2	7.7	0.8	1.4	2.0	2.9
12	10.8	18.4	24.9	NP	3.2	5.4	7.3	10.7	1.2	2.0	2.7	4.0
14	14.4	24.5	NP	NP	4.2	7.1	9.6	14.3	1.6	2.7	3.6	5.4
16	18.4	NP	NP	NP	5.4	9.1	12.4	18.3	2.0	3.4	4.7	6.9
18	22.9	NP	NP	NP	6.7	11.4	15.4	22.7	2.5	4.3	5.8	8.6
20	27.8	NP	NP	NP	8.1	13.8	18.7	27.6	3.1	5.2	7.0	10.4
22	NP	NP	NP	NP	9.7	16.5	22.3	NP	3.7	6.2	8.4	12.4
24	NP	NP	NP	NP	11.4	19.3	26.2	NP	4.3	7.3	9.9	14.6
26	NP	NP	NP	NP	13.2	22.4	NP	NP	5.0	8.5	11.4	16.9
28	NP	NP	NP	NP	15.1	25.7	NP	NP	5.7	9.7	13.1	19.4
30	NP	NP	NP	NP	17.2	NP	NP	NP	6.5	11.0	14.9	22.0
32	NP	NP	NP	NP	19.4	NP	NP	NP	7.3	12.4	16.8	24.8

34	NP	NP	NP	NP	21.7	NP	NP	NP	8.2	13.9	18.8	NP
36	NP	NP	NP	NP	24.1	NP	NP	NP	9.1	15.4	20.9	NP

For SI: 1 inch = 25.4 mm, 1 foot = 304.8 mm, 1 gallon per minute = 0.063 L/s, 1 pound per square inch = 6.895 kPa.
NP - Not permitted. Pressure loss exceeds reasonable limits.
a. Values are applicable for underground piping materials listed in *the California Plumbing Code* and are based on an SDR of 11 and a Hazen Williams C Factor of 150.
b. Values include the following length allowances for fittings: 25% length increase for actual lengths up to 100 feet and 15% length increase for actual lengths over 100 feet.
c. Flow rate from Section *R313.3.4.2*. Add 5 gpm to the flow rate required by Section *R313.3.4.2* where the water-service pipe supplies more than one dwelling.

TABLE *R313.3.6.2(2)*
MINIMUM WATER METER PRESSURE LOSS (PLm)a

FLOW RATE (gallons per minute, gpm)b	5/8 INCH METER PRESSURE LOSS (pounds per square inch, psi)	3/4 INCH METER PRESSURE LESS (pounds per square inch, psi)	1 INCH METER PRESSURE LOSS (pounds per square inch, psi)
8	2	1	1
10	3	1	1
12	4	1	1
14	5	2	1
16	7	3	1
18	9	4	1
20	11	4	2
22	NP	5	2
24	NP	5	2
26	NP	6	2
28	NP	6	2
30	NP	7	2
32	NP	7	3
34	NP	8	3
36	NP	8	3

For SI: 1 inch = 25.4 mm, 1 pound per square inch = 6.895 kPa, 1 gallon per minute = 0.063 L/s.
NP - Not permitted unless the actual water meter pressure loss is known.
a. Table *R313.3.6.2(2)* establishes conservative values for water meter pressure loss or installations where the water meter loss is unknown. Where the actual water meter pressure loss is known, Pm shall be the actual loss.
b. Flow rate from Section *R313.3.4.2*. Add 5 gpm to the flow rate required by Section *R313.3.4.2* where the water-service pipe supplies more than one dwelling.

TABLE *R313.3.6.2(3)*
ELEVATION LOSS (PLe)

ELEVATION (feet)	PRESSURE LOSS (psi)
5	2.2
10	4.4
15	6.5

20	8.7
25	10.9
30	13
35	15.2
40	17.4

For SI: 1 foot = 304.8 mm; 1 pound per square inch = 6.895 kPa.

TABLE *R313.3.6.2(4)*
ALLOWABLE PIPE LENGTH FOR 3/4 INCH TYPE M COPPER WATER TUBING

SPRINKLER FLOW RATEa (gpm)	WATER DISTRIBUTION SIZE (inch)	AVAILABLE PRESSURE - Pt (psi)									
		15	20	25	30	35	40	45	50	55	60
		Allowable length of pipe from service valve to farthest sprinkler (feet)									
8	3/4	217	289	361	434	506	578	650	723	795	867
9	3/4	174	232	291	349	407	465	523	581	639	697
10	3/4	143	191	239	287	335	383	430	478	526	574
11	3/4	120	160	200	241	281	321	361	401	441	481
12	3/4	102	137	171	205	239	273	307	341	375	410
13	3/4	88	118	147	177	206	235	265	294	324	353
14	3/4	77	103	128	154	180	205	231	257	282	308
15	3/4	68	90	113	136	158	181	203	226	248	271
16	3/4	60	80	100	120	140	160	180	200	220	241
17	3/4	54	72	90	108	125	143	161	179	197	215
18	3/4	48	64	81	97	113	129	145	161	177	193
19	3/4	44	58	73	88	102	117	131	146	160	175
20	3/4	40	53	66	80	93	106	119	133	146	159
21	3/4	36	48	61	73	85	97	109	121	133	145
22	3/4	33	44	56	67	78	89	100	111	122	133
23	3/4	31	41	51	61	72	82	92	102	113	123
24	3/4	28	38	47	57	66	76	85	95	104	114
25	3/4	26	35	44	53	61	70	79	88	97	105
26	3/4	24	33	41	49	57	65	73	82	90	98
27	3/4	23	30	38	46	53	61	69	76	84	91
28	3/4	21	28	36	43	50	57	64	71	78	85
29	3/4	20	27	33	40	47	53	60	67	73	80
30	3/4	19	25	31	38	44	50	56	63	69	75
31	3/4	18	24	29	35	41	47	53	59	65	71
32	3/4	17	22	28	33	39	44	50	56	61	67
33	3/4	16	21	26	32	37	42	47	53	58	63

34	3/4	NP	20	25	30	35	40	45	50	55	60
35	3/4	NP	19	24	28	33	38	42	47	52	57
36	3/4	NP	18	22	27	31	36	40	45	49	54
37	3/4	NP	17	21	26	30	34	38	43	47	51
38	3/4	NP	16	20	24	28	32	36	40	45	49
39	3/4	NP	15	19	23	27	31	35	39	42	46
40	3/4	NP	NP	18	22	26	29	33	37	40	44

For SI: 1 inch = 25.4 mm, 1 foot = 304.8 mm, 1 pound per square inch = 6.895 kPa, 1 gallon per minute = 0.963 L/s.
NP - Not permitted
a. Flow rate from Section *R313.3.4.2.*

TABLE *R313.3.6.2(5)*
ALLOWABLE PIPE LENGTH FOR 1 INCH TYPE M COPPER WATER TUBING

SPRINKLER FLOW RATEa (gpm)	WATER DISTRIBUTION SIZE (inch)	AVAILABLE PRESSURE - Pt (psi)									
		15	20	25	30	35	40	45	50	55	60
		Allowable length of pipe from service valve to farthest sprinkler (feet)									
8	1	806	1075	1343	1612	1881	2149	2418	2687	2955	3224
9	1	648	864	1080	1296	1512	1728	1945	2161	2377	2593
10	1	533	711	889	1067	1245	1422	1600	1778	1956	2134
11	1	447	586	745	894	1043	1192	1341	1491	1640	1789
12	1	381	508	634	761	888	1015	1142	1269	1396	1523
13	1	328	438	547	657	766	875	985	1094	1204	1313
14	1	286	382	477	572	668	763	859	954	1049	1145
15	1	252	336	420	504	588	672	756	840	924	1008
16	1	224	298	373	447	522	596	671	745	820	894
17	1	200	266	333	400	466	533	600	666	733	799
18	1	180	240	300	360	420	479	539	599	659	719
19	1	163	217	271	325	380	434	488	542	597	651
20	1	148	197	247	296	345	395	444	493	543	592
21	1	135	180	225	270	315	360	406	451	496	541
22	1	124	165	207	248	289	331	372	413	455	496
23	1	114	152	190	228	267	305	343	381	419	457
24	1	106	141	176	211	246	282	317	352	387	422
25	1	98	131	163	196	228	261	294	326	359	392
26	1	91	121	152	182	212	243	273	304	334	364
27	1	85	113	142	170	198	226	255	283	311	340
28	1	79	106	132	159	185	212	238	265	291	318
29	1	74	99	124	149	174	198	223	248	273	298
30	1	70	93	116	140	163	186	210	233	256	280

31	1	66	88	110	132	153	175	197	219	241	263
32	1	62	83	103	124	145	165	186	207	227	248
33	1	59	78	98	117	137	156	176	195	215	234
34	1	55	74	92	111	129	148	166	185	203	222
35	1	53	70	88	105	123	140	158	175	193	210
36	1	50	66	83	100	116	133	150	166	183	199
37	1	47	63	79	95	111	126	142	158	174	190
38	1	45	60	75	90	105	120	135	150	165	181
39	1	43	57	72	86	100	115	129	143	158	172
40	1	41	55	68	82	96	109	123	137	150	164

For SI: 1 inch = 25.4 mm, 1 foot = 304.8 mm, 1 pound per square inch = 6.895 kPa, 1 gallon per minute = 0.963 L/s.
a. Flow rate from Section *R313.3.4.2*.

TABLE *R313.3.6.2(6)*
ALLOWABLE PIPE LENGTH FOR 3/4 INCH CPVC PIPE

SPRINKLER FLOW RATEa (gpm)	WATER DISTRIBUTION SIZE (inch)	AVAILABLE PRESSURE - Pt (psi)									
		15	20	25	30	35	40	45	50	55	60
		Allowable length of pipe from service valve to farthest sprinkler (feet)									
8	3/4	348	465	581	697	813	929	1045	1161	1278	1394
9	3/4	280	374	467	560	654	747	841	934	1027	1121
10	3/4	231	307	384	461	538	615	692	769	845	922
11	3/4	193	258	322	387	451	515	580	644	709	773
12	3/4	165	219	274	329	384	439	494	549	603	658
13	3/4	142	189	237	284	331	378	426	473	520	568
14	3/4	124	165	206	247	289	330	371	412	454	495
15	3/4	109	145	182	218	254	290	327	363	399	436
16	3/4	97	129	161	193	226	258	290	322	354	387
17	3/4	86	115	144	173	202	230	259	288	317	346
18	3/4	78	104	130	155	181	207	233	259	285	311
19	3/4	70	94	117	141	164	188	211	234	258	281
20	3/4	64	85	107	128	149	171	192	213	235	256
21	3/4	58	78	97	117	136	156	175	195	214	234
22	3/4	54	71	89	107	125	143	161	179	197	214
23	3/4	49	66	82	99	115	132	148	165	181	198
24	3/4	46	61	76	91	107	122	137	152	167	183
25	3/4	42	56	71	85	99	113	127	141	155	169
26	3/4	39	52	66	79	92	105	118	131	144	157
27	3/4	37	49	61	73	86	98	110	122	135	147

28	3/4	34	46	57	69	80	92	103	114	126	137
29	3/4	32	43	54	64	75	86	96	107	118	129
30	3/4	30	40	50	60	70	81	91	101	111	121
31	3/4	28	38	47	57	66	76	85	95	104	114
32	3/4	27	36	45	54	63	71	80	89	98	107
33	3/4	25	34	42	51	59	68	76	84	93	101
34	3/4	24	32	40	48	56	64	72	80	88	96
35	3/4	23	30	38	45	53	61	68	76	83	91
36	3/4	22	29	36	43	50	57	65	72	79	86
37	3/4	20	27	34	41	48	55	61	68	75	82
38	3/4	20	26	33	39	46	52	59	65	72	78
39	3/4	19	25	31	37	43	50	56	62	68	74
40	3/4	18	24	30	35	41	47	53	59	65	71

For SI: 1 inch = 25.4 mm, 1 foot = 304.8 mm, 1 pound per square inch = 6.895 kPa, 1 gallon per minute = 0.963 L/s.
a. Flow rate from Section *R313.3.4.2.*

TABLE *R313.3.6.2(7)*
ALLOWABLE PIPE LENGTH FOR 1 INCH CPVC PIPE

SPRINKLER FLOW RATEa (gpm)	WATER DISTRIBUTION SIZE (inch)	AVAILABLE PRESSURE - Pt (psi)									
		15	20	25	30	35	40	45	50	55	60
		Allowable length of pipe from service valve to farthest sprinkler (feet)									
8	1	1049	1398	1748	2098	2447	2797	3146	3496	3845	4195
9	1	843	1125	1406	1687	1968	2249	2530	2811	3093	3374
10	1	694	925	1157	1388	1619	1851	2082	2314	2545	2776
11	1	582	776	970	1164	1358	1552	1746	1940	2133	2327
12	1	495	660	826	991	1156	1321	1486	1651	1816	1981
13	1	427	570	712	854	997	1139	1281	1424	1566	1709
14	1	372	497	621	745	869	993	1117	1241	1366	1490
15	1	328	437	546	656	765	874	983	1093	1202	1311
16	1	291	388	485	582	679	776	873	970	1067	1164
17	1	260	347	433	520	607	693	780	867	954	1040
18	1	234	312	390	468	546	624	702	780	858	936
19	1	212	282	353	423	494	565	635	706	776	847
20	1	193	257	321	385	449	513	578	642	706	770
21	1	176	235	293	352	410	469	528	586	645	704
22	1	161	215	269	323	377	430	484	538	592	646
23	1	149	198	248	297	347	396	446	496	545	595
24	1	137	183	229	275	321	366	412	458	504	550

25	1	127	170	212	255	297	340	382	425	467	510
26	1	118	158	197	237	276	316	355	395	434	474
27	1	111	147	184	221	258	295	332	368	405	442
28	1	103	138	172	207	241	275	310	344	379	413
29	1	97	129	161	194	226	258	290	323	355	387
30	1	91	121	152	182	212	242	273	303	333	364
31	1	86	114	143	171	200	228	257	285	314	342
32	1	81	108	134	161	188	215	242	269	296	323
33	1	76	102	127	152	178	203	229	254	280	305
34	1	72	96	120	144	168	192	216	240	265	289
35	1	68	91	114	137	160	182	205	228	251	273
36	1	65	87	108	130	151	173	195	216	238	260
37	1	62	82	103	123	144	165	185	206	226	247
38	1	59	78	98	117	137	157	176	196	215	235
39	1	56	75	93	112	131	149	168	187	205	224
40	1	53	71	89	107	125	142	160	178	196	214

For SI: 1 inch = 25.4 mm, 1 foot = 304.8 mm, 1 pound per square inch = 6.895 kPa, 1 gallon per minute = 0.963 L/s.
a. Flow rate from Section *R313.3.4.2.*

TABLE *R313.3.6.2(8)*
ALLOWABLE PIPE LENGTH FOR 3/4 INCH PEX AND PE-RT TUBING

SPRINKLER FLOW RATEa (gpm)	WATER DISTRIBUTION SIZE (inch)	AVAILABLE PRESSURE - Pt (psi)									
		15	20	25	30	35	40	45	50	55	60
		Allowable length of pipe from service valve to farthest sprinkler (feet)									
8	3/4	93	123	154	185	216	247	278	309	339	370
9	3/4	74	99	124	149	174	199	223	248	273	298
10	3/4	61	82	102	123	143	163	184	204	225	245
11	3/4	51	68	86	103	120	137	154	171	188	205
12	3/4	44	58	73	87	102	117	131	146	160	175
13	3/4	38	50	63	75	88	101	113	126	138	151
14	3/4	33	44	55	66	77	88	99	110	121	132
15	3/4	29	39	48	58	68	77	87	96	106	116
16	3/4	26	34	43	51	60	68	77	86	94	103
17	3/4	23	31	38	46	54	61	69	77	84	92
18	3/4	21	28	34	41	48	55	62	69	76	83
19	3/4	19	25	31	37	44	50	56	62	69	75
20	3/4	17	23	28	34	40	45	51	57	62	68
21	3/4	16	21	26	31	36	41	47	52	57	62

22	3/4	NP	19	24	28	33	38	43	47	52	57
23	3/4	NP	17	22	26	31	35	39	44	48	52
24	3/4	NP	16	20	24	28	32	36	40	44	49
25	3/4	NP	NP	19	22	26	30	34	37	41	45
26	3/4	NP	NP	17	21	24	28	31	35	38	42
27	3/4	NP	NP	16	20	23	26	29	33	36	39
28	3/4	NP	NP	15	18	21	24	27	30	33	36
29	3/4	NP	NP	NP	17	20	23	26	28	31	34
30	3/4	NP	NP	NP	16	19	21	24	27	29	32
31	3/4	NP	NP	NP	15	18	20	23	25	28	30
32	3/4	NP	NP	NP	NP	17	19	21	24	26	28
33	3/4	NP	NP	NP	NP	16	18	20	22	25	27
34	3/4	NP	NP	NP	NP	NP	17	19	21	23	25
35	3/4	NP	NP	NP	NP	NP	16	18	20	22	24
36	3/4	NP	NP	NP	NP	NP	15	17	19	21	23
37	3/4	NP	NP	NP	NP	NP	NP	16	18	20	22
38	3/4	NP	NP	NP	NP	NP	NP	16	17	19	21
39	3/4	NP	NP	NP	NP	NP	NP	NP	16	18	20
40	3/4	NP	NP	NP	NP	NP	NP	NP	16	17	19

For SI: 1 inch = 25.4 mm, 1 foot = 304.8 mm, 1 pound per square inch = 6.895 kPa, 1 gallon per minute = 0.963 L/s.
NP - Not permitted.
a. Flow rate from Section *R313.3.4.2*.

TABLE *R313.3.6.2(9)*
ALLOWABLE PIPE LENGTH FOR 1 INCH PEX AND PE-RT TUBING

SPRINKLER FLOW RATEa (gpm)	WATER DISTRIBUTION SIZE (inch)	AVAILABLE PRESSURE - Pt (psi)									
		15	20	25	30	35	40	45	50	55	60
		Allowable length of pipe from service valve to farthest sprinkler (feet)									
8	1	314	418	523	628	732	837	941	1046	1151	1255
9	1	252	336	421	505	589	673	757	841	925	1009
10	1	208	277	346	415	485	554	623	692	761	831
11	1	174	232	290	348	406	464	522	580	638	696
12	1	148	198	247	296	346	395	445	494	543	593
13	1	128	170	213	256	298	341	383	426	469	511
14	1	111	149	186	223	260	297	334	371	409	446
15	1	98	131	163	196	229	262	294	327	360	392
16	1	87	116	145	174	203	232	261	290	319	348
17	1	78	104	130	156	182	208	233	259	285	311
18	1	70	93	117	140	163	187	210	233	257	280

19	1	63	84	106	127	148	169	190	211	232	253
20	1	58	77	96	115	134	154	173	192	211	230
21	1	53	70	88	105	123	140	158	175	193	211
22	1	48	64	80	97	113	129	145	161	177	193
23	1	44	59	74	89	104	119	133	148	163	178
24	1	41	55	69	82	96	110	123	137	151	164
25	1	38	51	64	76	89	102	114	127	140	152
26	1	35	47	59	71	83	95	106	118	130	142
27	1	33	44	55	66	77	88	99	110	121	132
28	1	31	41	52	62	72	82	93	103	113	124
29	1	29	39	48	58	68	77	87	97	106	116
30	1	27	36	45	54	63	73	82	91	100	109
31	1	26	34	43	51	60	68	77	85	94	102
32	1	24	32	40	48	56	64	72	80	89	97
33	1	23	30	38	46	53	61	68	76	84	91
34	1	22	29	36	43	50	58	65	72	79	86
35	1	20	27	34	41	48	55	61	68	75	82
36	1	19	26	32	39	45	52	58	65	71	78
37	1	18	25	31	37	43	49	55	62	68	74
38	1	18	23	29	35	41	47	53	59	64	70
39	1	17	22	28	33	39	45	50	56	61	67
40	1	16	21	27	32	37	43	48	53	59	64

For SI: 1 inch = 25.4 mm, 1 foot = 304.8 mm, 1 pound per square inch = 6.895 kPa, 1 gallon per minute = 0.963 L/s.
a. Flow rate from Section *R313.3.4.2*.

R314.1.1 Listings. Smoke alarms shall be listed in accordance with UL 217. Combination smoke and carbon monoxide alarms shall be listed in accordance with UL 217 and UL 2034. *Systems and components shall be California State Fire Marshal listed and approved in accordance with California Code of Regulations, Title 19, Division 1 for the purpose for which they are installed.*

R314.2.2 Alterations, repairs and additions. Where alterations, repairs or additions requiring a permit occur, or where one or more sleeping rooms are added or created in existing dwellings, the individual dwelling unit shall be equipped with smoke alarms located as required for new dwellings.

Exceptions: ~~1. Work involving the exterior surfaces of dwellings, such as the replacement of roofing or siding, the addition or replacement of windows or doors, or the addition of a porch or deck, are exempt from the requirements of this section.~~
~~2. Installation, alteration or repairs of plumbing or mechanical systems are exempt from the requirements of this section~~ *See Section R314.6.*

R314.3 Location. Smoke alarms shall be installed in the following locations:
1. In each sleeping room.
2. Outside each separate sleeping area in the immediate vicinity of the bedrooms.
3. On each additional story of the dwelling, including basements and habitable attics and not including crawl spaces and uninhabitable attics. In dwellings or dwelling units with split levels and without an intervening door between the

adjacent levels, a smoke alarm installed on the upper level shall suffice for the adjacent lower level provided that the lower level is less than one full story below the upper level.
4. Smoke alarms shall be installed not less than 3 feet (914 mm) horizontally from the door or opening of a bathroom that contains a bathtub or shower unless this would prevent placement of a smoke alarm required by Section R314.3.

See Section R314.3.3 for specific location requirements.

R314.3.2 Smoke alarms. *Smoke alarms shall be tested and maintained in accordance with the manufacturer's instructions. Smoke alarms that no longer function shall be replaced.*

R314.3.3 Specific location requirements.
Extract from NFPA 72 Section 29.8.3.4 Specific Location Requirements.*
This extract has been provided by NFPA as amended by the Office of the State Fire Marshal and adopted by reference as follows:

29.8.3.4 Specific Location Requirements. The installation of smoke alarms and smoke detectors shall comply with the following requirements:

(1) Smoke alarms and smoke detectors shall not be located where ambient conditions, including humidity and temperature, are outside the limits specified by the manufacturer's published instructions.
(2) Smoke alarms and smoke detectors shall not be located within unfinished attics or garages or in other spaces where temperatures can fall below 40°F (4°C) or exceed 100°F (38°C).
(3) Where the mounting surface could become considerably warmer or cooler than the room, such as a poorly insulated ceiling below an unfinished attic or an exterior wall, smoke alarms and smoke detectors shall be mounted on an inside wall.
(4) Smoke alarms or smoke detectors shall be installed a minimum of 20 feet horizontal distance from a permanently installed cooking appliance.
Exception:
Ionization smoke alarms with an alarm-silencing switch or Photoelectric smoke alarms shall be permitted to be installed 10 feet (3 m) or greater from a permanently installed cooking appliance.
Photoelectric smoke alarms shall be permitted to be installed greater than 6 feet (1.8 m) from a permanently installed cooking appliance where the kitchen or cooking area and adjacent spaces have no clear interior partitions and the 10 ft distances would prohibit the placement of a smoke alarm or smoke detector required by other sections of the code.
Smoke alarms listed for use in close proximity to a permanently installed cooking appliance.

(5) Installation near bathrooms. Smoke alarms shall be installed not less than a 3 foot (0.91 m) horizontal distance from the door or opening of a bathroom that contains a bathtub or shower unless this would prevent placement of a smoke alarm required by other sections of the code.
(6) Smoke alarms and smoke detectors shall not be installed within a 36 in. (910 mm) horizontal path from the supply registers of a forced air heating or cooling system and shall be installed outside of the direct airflow from those registers.
(7) Smoke alarms and smoke detectors shall not be installed within a 36 in. (910 mm) horizontal path from the tip of the blade of a ceiling-suspended (paddle) fan.
(8) Where stairs lead to other occupied levels, a smoke alarm or smoke detector shall be located so that smoke rising in the stairway cannot be prevented from reaching the smoke alarm or smoke detector by an intervening door or obstruction.
(9) For stairways leading up from a basement, smoke alarms or smoke detectors shall be located on the basement ceiling near the entry to the stairs.
(10) For tray-shaped ceilings (coffered ceilings), smoke alarms and smoke detectors shall be installed on the highest portion of the ceiling or on the sloped portion of the ceiling within 12 in. (300 mm) vertically down from the highest point.
(11) Smoke alarms and detectors installed in rooms with joists or beams shall comply with the requirements of 17.7.3.2.4.
(12) Heat alarms and detectors installed in rooms with joists or beams shall comply with the requirements of 17.6.3.

****For additional requirements or clarification see NFPA 72.***

R314.4 Interconnection. ~~Where more than one smoke alarm is required to be installed within an individual dwelling unit in accordance with Section R314.3, the alarm devices shall be interconnected in such a manner that the actuation of one alarm will activate all of the alarms in the individual dwelling unit. Physical interconnection of smoke alarms shall not be required where listed wireless alarms are installed and all alarms sound upon activation of one alarm.~~

~~**Exception:** Interconnection of smoke alarms in existing areas shall not be required where alterations or repairs do not result in removal of interior wall or ceiling finishes exposing the structure, unless there is an attic, crawl space or basement available that could provide access for interconnection without the removal of interior finishes.~~

R314.4 Interconnection. *Where more than one smoke alarm is required to be installed within an individual dwelling or sleeping unit, the smoke alarms shall be interconnected in such a manner that the activation of one alarm will activate all of the alarms in the individual unit. The alarm shall be clearly audible in all bedrooms over background noise levels with all intervening doors closed.*

Exceptions:
1. Interconnection is not required in buildings that are not undergoing alterations, repairs or construction of any kind.
2. Smoke alarms in existing areas are not required to be interconnected where alterations or repairs do not result in the removal of interior wall or ceiling finishes exposing the structure, unless there is an attic, crawl space or basement available which could provide access for interconnection without the removal of interior finishes.
3. Smoke alarms are not required to be interconnected where repairs or alterations are limited to the exterior surfaces of dwellings, such as the replacement of roofing or siding, or the addition or replacement of windows or doors, or the addition of a porch or deck.
4. Smoke alarms are not required to be interconnected when work is limited to the installation, alteration or repairs of plumbing or mechanical systems or the installation, alteration or repair of electrical systems which do not result in the removal of interior wall or ceiling finishes exposing the structure.

R314.6 Power source. ~~Smoke alarms shall receive their primary power from the building wiring where such wiring is served from a commercial source, and where primary power is interrupted, shall receive power from a battery. Wiring shall be permanent and without a disconnecting switch other than those required for overcurrent protection.~~

~~**Exceptions:**~~
~~1. Smoke alarms shall be permitted to be battery operated when installed in buildings without commercial power.~~
~~2. Hard wiring of smoke alarms in existing areas shall not be required where the *alterations* or repairs do not result in the removal of interior wall or ceiling finishes exposing the structure, unless there is an *attic*, crawl space or *basement* available which could provide access for hard wiring without the removal of interior finishes.~~

R314.6 Power source. *Smoke alarms shall receive their primary power from the building wiring provided that such wiring is served from a commercial source and shall be equipped with a battery backup. Smoke alarms with integral strobes that are not equipped with battery backup shall be connected to an emergency electrical system. Smoke alarms shall emit a signal when the batteries are low. Wiring shall be permanent and without a disconnecting switch other than as required for overcurrent protection.*

Exceptions:
1. Smoke alarms are permitted to be solely battery operated in existing buildings where no construction is taking place.
2. Smoke alarms are permitted to be solely battery operated in buildings that are not served from a commercial power source.
3. Smoke alarms are permitted to be solely battery operated in existing areas of buildings undergoing alterations or repairs that do not result in the removal of interior walls or ceiling finishes exposing the structure, unless there is an attic, crawl space or basement available which could provide access for building wiring without the removal of interior finishes.
4. Smoke alarms are permitted to be solely battery operated where repairs or alterations are limited to the exterior surfaces of dwellings, such as the replacement of roofing or siding, or the addition or replacement of windows or doors, or the addition of a porch or deck.
5. Smoke alarms are permitted to be solely battery operated when work is limited to the installation, alteration or repairs of plumbing or mechanical systems or the installation, alteration or repair of electrical systems which do not result in the removal of interior wall or ceiling finishes exposing the structure.

~~R314.7~~R314.8 Existing Group R-3 occupancies.

~~R314.7.1~~R314.8.1 Existing buildings housing Group R-3 occupancies established prior to the effective date of these regulations may have their use continued if they conform or are made to conform to provisions of these regulations to the extent that reasonable and adequate life safety against the hazards of fire, panic and explosion is substantially provided. Additional means of egress, the installation of automatic sprinkler systems, automatic fire alarm system or other life safety measures, may be required to provide reasonable and adequate safety.

***Note:** It is the intent of this section that every existing occupancy need not mandatorily conform with the requirements for new construction. Reasonable judgment in the application of requirements must be exercised by the enforcing agency.*

~~R314.7.2~~R314.8.2 For purposes of clarification, Health and Safety Code Section 13113.7 is repeated.

(a) Except as otherwise provided in this section, a smoke detector, approved and listed by the State Fire Marshal pursuant to Section 13114, shall be installed, in accordance with the manufacturer's instructions in each dwelling intended for human occupancy within the earliest applicable time period as follows:

(1) For all dwelling units intended for human occupancy, upon the owner's application on or after January 1, 1985, for a permit for alterations, repairs, or additions, exceeding one thousand dollars ($1,000).
(2) For all other dwelling units intended for human occupancy on or after January 1, 1987.

However, if any local rule, regulation, or ordinance, adopted prior to the compliance dates specified in paragraphs (1) and (2) requires installation in a dwelling unit intended for human occupancy of smoke detector, which receive their power from the electrical system of the building and requires compliance with the local rule, regulation, or ordinance at a date subsequent to the dates specified in this section, the compliance date specified in the rule, regulation, or ordinance shall, but only with respect to the dwelling units specified in this section, take precedence over the dates specified in this section.

The State Fire Marshal may adopt regulations exempting dwellings intended for human occupancy with fire sprinkler systems from the provisions of this section, if he or she determines that a smoke detector is not reasonably necessary for fire safety in the occupancy.

Unless prohibited by local rules, regulations, or ordinances, a battery-operated smoke detector which otherwise meets the standards adopted pursuant to Section 13114 for smoke detectors, satisfies the requirements of this section.

(b) "Dwelling units intended for human occupancy," as used in this section, includes a duplex, lodging house, apartment complex, hotel, motel, condominium, stock cooperative, time-share project, or dwelling unit of a multiple-unit dwelling complex. For the purpose of this part, "dwelling units intended for human occupancy" does not include manufactured homes as defined in Section 18007, mobile homes as defined in Section 18008, and commercial coaches as defined in Section 18001.8.

(c) The owner of each dwelling unit subject to this section shall supply and install smoke detectors required by this section in the locations and in the manner set forth in the manufacturer's instructions, as approved by the State Fire Marshal's regulations. In the case of apartment complexes and other multiple- dwelling complexes, a smoke detector shall be installed in the common stairwells. All fire alarm warning systems supplemental to the smoke detector shall also be listed by the State Fire Marshal.

(d) A high-rise structure, as defined in subdivision (b) of Section 13210 and regulated by Chapter 3 (commencing with Section 13210), and which is used for purposes other than as dwelling units intended for human occupancy, is exempt from the requirements of this section.

(e) The owner shall be responsible for testing and maintaining detectors in hotels, motels, lodging houses, and common stairwells of apartment complexes and other multiple-dwelling complexes.

An owner or the owner's agent may enter any dwelling unit, efficiency dwelling unit, guest room, and suite owned by the owner for the purpose of installing, repairing, testing, and maintaining single station smoke detectors required by this section. Except in cases of emergency, the owner or owner's agent shall give the tenants of each such unit, room, or suite reasonable notice in writing of the intention to enter and shall enter only during normal business hours. Twenty-four hours shall be presumed to be reasonable notice in absence of evidence to the contrary.

The smoke detector shall be operable at the time that the tenant takes possession. The apartment complex tenant shall be responsible for notifying the manager or owner if the tenant becomes aware of an inoperable smoke detector within his or her unit. The owner or authorized agent shall correct any reported deficiencies in the smoke detector and shall not be in violation of this section for a deficient smoke detector when he or she has not received notice of the deficiency.

(f) A violation of this section is an infraction punishable by a maximum fine of two hundred dollars ($200) for each offense.

(g) This section shall not affect any rights which the parties may have under any other provision of law because of the presence or absence of a smoke detector.

(h) This section shall not apply to the installation of smoke detectors in single-family dwellings or factory-built housing which is regulated by Section 13113.8, as added by Assembly Bill No. 2285 of the 1983-84 Regular Session.

~~R314.7.3~~R314.8.3 For purposes of clarification, Health and Safety Code Section 13113.8 is repeated:

(a) On and after January 1, 1986, every single- family dwelling and factory-built housing, as defined in Section 19971, which is sold shall have an operable smoke detector. The detector shall be approved and listed by the State Fire Marshal and installed in accordance with the State Fire Marshal's regulations. Unless prohibited by local rules, regulations, or ordinances, a battery-operated smoke detector shall be deemed to satisfy the requirements of this section.

(b) On and after January 1, 1986, the transferor of any real property containing a single-family dwelling, as described in subdivision (a), whether the transfer is made by sale, exchange, or real property sales contract, as defined in Section 2985 of the Civil Code, shall deliver to the transferee a written statement indicating that the transferor is in compliance with this section. The disclosure statement shall be either included in the receipt for deposit in a real estate transaction, an addendum attached thereto, or a separate document.

(c) The transferor shall deliver the statement referred to in subdivision (b) as soon as practicable before the transfer of title in the case of a sale or exchange, or prior to execution of the contract where the transfer is by a real property sales contract, as defined in Section 2985. For purposes of this subdivision, "delivery" means delivery in person or by mail to the transferee or transferor, or to any person authorized to act for him or her in the transaction, or to additional transferees who have requested delivery from the transferor in writing. Delivery to the spouse of a transferee or transferor shall be deemed delivery to a transferee or transferor, unless the contract states otherwise.

(d) This section does not apply to any of the following:

(1) Transfers which are required to be preceded by the furnishing to a prospective transferee of a copy of a public report pursuant to Section 11018.1 of the Business and Professions Code.

(2) Transfers pursuant to court order, including, but not limited to, transfers ordered by a probate court in the administration of an estate, transfers pursuant to a writ of execution, transfers by a trustee in bankruptcy, transfers by eminent domain, or transfers resulting from a decree for specific performance.

(3) Transfers to a mortgagee by a mortgagor in default, transfers to a beneficiary of a deed of trust by a trustor in default, transfers by any foreclosure sale after default, transfers by any foreclosure sale after default in an obligation secured by a mortgage, or transfers by a sale under a power of sale after a default in an obligation secured by a deed of trust or secured by any other instrument containing a power of sale.

(4) Transfers by a fiduciary in the course of the administration of a decedent's estate, guardianship, conservatorship, or trust.

(5) Transfers from one co-owner to one or more co-owners.

(6) Transfers made to a spouse, or to a person or persons in the lineal line of consanguinity of one or more of the transferors.

(7) Transfers between spouses resulting from a decree of dissolution of a marriage, from a decree of legal separation, or from a property settlement agreement incidental to either of those decrees.

(8) Transfers by the Controller in the course of administering the Unclaimed Property Law provided for in Chapter 7 (commencing with Section 1500) of Title 10 of Part 3 of the Code of Civil Procedure.

(9) Transfers under the provisions of Chapter 7 (commencing with Section 3691) or Chapter 8 (commencing with Section 3771) of Part 6 of Division 1 of the Revenue and Taxation Code.

(e) No liability shall arise, nor any action be brought or maintained against, any agent of any party to a transfer of title, including any person or entity acting in the capacity of an escrow, for any error, inaccuracy, or omission relating to the disclosure required to be made by a transferor pursuant to this section. However, this subdivision does not apply to a licensee, as defined in Section 10011 of the Business and Professions Code, where the licensee participates in the making of the disclosure required to be made pursuant to this section with actual knowledge of the falsity of the disclosure.

(f) Except as otherwise provided in this section, this section shall not be deemed to create or imply a duty upon a licensee, as defined in Section 10011 of the Business and Professions Code, or upon any agent of any party to a transfer of title, including any person or entity acting in the capacity of an escrow, to monitor or ensure compliance with this section.

(g) No transfer of title shall be invalidated on the basis of a failure to comply with this section, and the exclusive remedy for the failure to comply with this section is an award of actual damages not to exceed one hundred dollars ($100), exclusive of any court costs and attorney's fees.

(h) Local ordinances requiring smoke detectors in single-family dwellings may be enacted or amended. However, the ordinances shall satisfy the minimum requirements of this section.

(i) For the purposes of this section, "single-family dwelling" does not include a manufactured home as defined in Section 18007, a mobilehome as defined in Section 18008, or a commercial coach as defined in Section 18001.8.

(j) This section shall not apply to the installation of smoke detectors in dwellings intended for human occupancy, as defined in and regulated by Section 13113.7 of the Health and Safety Code, as added by Senate Bill No. 1448 in the 1983-84 Regular Session.

[Editorial Note: Soler PV provisions relocated from 2013 CRC Section 331.]
R324.2 Solar thermal systems. Solar thermal systems shall be designed and installed in accordance with Chapter 23 and the ~~International~~*California* Fire Code.

R324.3 Photovoltaic systems. Photovoltaic systems shall be designed and installed in accordance with Sections R324.3.1 through R324.7.2.5 and ~~NFPA 70~~*California Electric Code*. Inverters shall be listed and labeled in accordance with UL 1741. Systems connected to the utility grid shall use inverters listed for utility interaction.

[Editorial Note: Amendment carried over from 2013 CRC R331.1]
R324.7 Access and pathways. Roof access, pathways and spacing requirements shall be provided in accordance with Sections R324.7.1 through R324.7.2.5.

Exceptions:
1. Detached, *nonhabitable Group U Structures including, but not limited to,* garages and accessory structures to one and two-family dwellings and townhouses, such as parking shade structures, carports, solar trellises and similar structures.
2. Roof access, pathways and spacing requirements need not be provided where an alternative ventilation method approved by the code official has been provided or where the code official has determined that vertical ventilation techniques will not be employed.

R324.7.2 Solar photovoltaic systems. Solar photovoltaic systems shall comply with Sections R324.7.2.1 through ~~R324.7.2.5~~*R324.7.2.6*.

***~~R331.3~~R324.7.2.6* Ground-mounted photovoltaic arrays.** *Ground mounted photovoltaic arrays shall comply with this section_and the California Electrical Code. Setback requirements shall not apply to ground-mounted, free-standing photovoltaic arrays. A clear, brush-free area of 10 feet (3048 mm) shall be required for ground-mounted photovoltaic arrays.*

SECTION ~~R325~~R335
SPECIAL PROVISIONS FOR LICENSED 24-HOUR CARE FACILITIES IN A GROUP R-3.1

***~~R325.1~~R335.1* Scope.** *The provisions of this section shall apply to 24-hour care facilities in a Group R-3.1 occupancy licensed by a governmental agency.*

***~~R325.2~~R335.2* General.** *The provisions in this section shall apply in addition to general requirements in this code.*

~~R325.2.1~~R335.2.1 *Restraint shall not be practiced in a Group R-3.1 occupancy.*

Exception: *Occupancies which meet all the requirements for a Group I-3 occupancy.*

~~R325.2.2~~R335.2.2 *Pursuant to Health and Safety Code Section 13133, regulations of the state fire marshal pertaining to Occupancies classified as Residential Facilities (RF) and Residential-care Facilities for the Elderly (RCFE) shall apply uniformly throughout the state and no city, county, city and county, including a charter city or charter county, or fire protection district shall adopt or enforce any ordinance or local rule or regulation relating to fire and panic safety which is inconsistent with these regulations. A city, county, city and county, including a charter city or charter county may pursuant to Health and Safety Code Section 13143.5, or a fire protection district may pursuant to Health and Safety Code Section 13869.7, adopt standards more stringent than those adopted by the state fire marshal that are reasonably necessary to accommodate local climate, geological, or topographical conditions relating to roof coverings for Residential-care Facilities for the Elderly.*

> ***Exception:*** *Local regulations relating to roof coverings in facilities licensed as a Residential Care Facility for the Elderly (RCFE) per Health and Safety Code Section 13133.*

***~~R325.3~~R335.3* Building Height and Area Provisions.**

***~~R325.3.1~~R335.3.1* Limitations six or less clients.** *Group R-3.1 occupancies where nonambulatory clients are housed above the first story, having more than two stories in height or having more than 3,000 square feet (279 m2) of floor area above the first story shall not be of less than one-hour fire-resistance-rated construction throughout.*

In Group R-3.1 occupancies housing a bedridden client, the client sleeping room shall not be located above or below the first story.

> ***Exception:*** *Clients who become bedridden as a result of a temporary illness as defined in Health and Safety Code Sections 1566.45, 1568.0832, and 1569.72. A temporary illness is an illness, which persists for 14 days or less. A bedridden client may be retained in excess of the 14 days upon approval by the Department of Social Services and may continue to be housed on any story in a Group R-3.1 occupancy classified as a licensed residential facility.*

Every licensee admitting or retaining a bedridden resident shall, within 48 hours of the resident's admission or retention in the facility, notify the local fire authority with jurisdiction of the estimated length of time the resident will retain his or her bedridden status in the facility.

***~~R325.4~~R335.4* Interior Finish Provisions.**

***~~R325.4.1~~R335.4.1* Interior wall and ceiling finish.** *Group R-3.1 occupancies housing a bedridden client shall comply with Interior Wall and Ceiling Finish requirements specified for Group I-2 occupancies in Table ~~803.5~~803.11 of the California Building Code.*

***~~R325.5~~R335.5* Fire Protection System Provisions.**

~~R325.5.2~~R335.5.2 **Smoke alarms in Groups R-3.1 occupancies.** *Smoke alarms shall be installed where required in Section R314. In addition to the provisions set forth in Section R314 the following shall apply:*

1. *Smoke alarms shall be provided throughout the habitable areas of the dwelling unit except kitchens.*
2. *Facilities housing a bedridden client:*

   2.1. *Smoke alarms shall receive their primary power from the building wiring when such wiring is served from a commercial source and shall be equipped with a battery backup.*
   2.2. *Smoke alarms shall be electrically interconnected so as to cause all smoke alarms to sound a distinctive alarm signal upon actuation of any single smoke alarm. Such alarm signal shall be audible throughout the facility at a minimal level of 15 db above ambient noise level. These devices need not be interconnected to any other fire alarm device, have a control panel, or be electrically supervised or provided with emergency power.*

~~R325.5.2.1~~R335.5.2.1 **Audible alarm signal.** *The audible signal shall be the standard fire alarm evacuation signal, ANSI S3.41 Audible Emergency Evacuation Signal, "three pulse temporal pattern," as described in NFPA 72.*

~~R325.5.2.2~~R335.5.2.2 **Hearing impaired.** *See Section 907.5.2.3 of the California Building Code.*

~~R325.5.2.3~~R335.5.2.3 **Visible alarms.** *Visible alarm notification appliances shall be provided in accordance with Sections 907,5.2.3.1 through 907.5.2.3.5 of the California Building Codes.*

Exceptions:
1. *Visible alarm notification appliances are not required in alterations, except where an existing fire alarm system is upgraded or replaced, or a new fire alarm system is installed.*
2. *Visible alarm notification appliances shall not be required in enclosed exit stairways, exterior exit stairs, and exterior exit ramps.*
3. *Visible alarm notification appliances shall not be required in elevator cars.*

~~R325.5.2.4~~R335.5.2.4 **Group R-3.1** *Protective social care facilities which house persons who are hearing impaired, shall be provided with notification appliances for the hearing impaired installed in accordance with NFPA 72 and which shall activated upon initiation of the fire alarm system or the smoke alarms.*

Exception: *The use of the existing evacuation signaling scheme shall be permitted where approved by the enforcing agency.*

~~R325.6~~R335.6 **Means of Egress Provisions.**

~~R325.6.1~~R335.6.1 **General.** *In addition to the general means of egress requirements of Chapter 10 of the California Building Code, this section shall apply to Group R-3.1 occupancies.*

~~R325.6.2~~R335.6.2 **Number of exits.**

~~R325.6.2.1~~R335.6.2.1 *Group R-3.1 occupancies shall have a minimum of two exits.*

~~R325.6.3~~R335.6.3 **Egress arrangements.**

~~R325.6.3.1~~R335.6.3.1 *Egress through adjoining dwelling units shall not be permitted.*

~~R325.6.3.2~~R335.6.3.2 **Group R-3.1 occupancies housing nonambulatory clients.** *In a Group R-3.1 occupancy, bedrooms used by nonambulatory clients shall have access to at least one of the required exits which shall conform to one of the following:*

1. *Egress through a hallway or area into a bedroom in the immediate area which has an exit directly to the exterior and the corridor/hallway is constructed consistent with the dwelling unit interior walls. The hallway shall be separated from common areas by a solid wood door not less than 1⅜ inch (35 mm) in thickness, maintained self-closing or shall be automatic closing by actuation of a smoke detector installed in accordance with Section ~~715.4.7~~716.5.9 of the California Building Code.*

2. *Egress through a hallway which has an exit directly to the exterior. The hallway shall be separated from the rest of the house by a wall constructed consistent with the dwelling unit interior walls and opening protected by a solid wood door not less than 1⅜ inch (35 mm) in thickness, maintained self-closing or shall be automatic closing by actuation of a smoke detector installed in accordance with Section ~~715.4.7~~716.5.9 of the California Building Code.*
3. *Direct exit from the bedroom to the exterior, such doors shall be of a size as to permit the installation of a door not less than 3 feet (914 mm) in width and not less than 6 feet 8 inches (2032 mm) in height. When installed, doors shall be capable of opening at least 90 degrees and shall be so mounted that the clear width of the exit way is not less than 32 inches (813 mm).*
4. *Egress through an adjoining bedroom which exits to the exterior.*

~~R325.6.3.3~~R335.6.3.3 Group R-3.1 occupancies housing only one bedridden clients. *In Group R-3.1 occupancies housing a bedridden client and not provided with an approved automatic fire sprinkler system, all of the following shall apply:*

1. *In Group R-3.1 Occupancies housing a bedridden client, a direct exit to the exterior of the residence shall be provided from the client sleeping room.*
2. *Doors to a bedridden client's sleeping room shall be of a self-closing, positive latching 1-⅜ inch solid wood door. Such doors shall be provided with a gasket so installed as to provide a seal where the door meets the jam on both sides and across the top. Doors shall be maintained self-closing or shall be automatic closing by actuation of a smoke detector in accordance with Section ~~715.4.7~~716.5.9 of the California Building Code.*
3. *Group R-3.1 Occupancies housing a bedridden client, shall not have a night latch, dead bolt, security chain or any similar locking device installed on any interior door leading from a bedridden client's sleeping room to any interior area such as a corridor, hallway and or general use areas of the residence in accordance with Chapter 10 of the California Building Code.*
4. *The exterior exit door to a bedridden client's sleeping room shall be operable from both the interior and exterior of the residence.*
5. *Every required exit doorway from a bedridden client sleeping room shall be of a size as to permit the installation of a door not less than 3 feet (914 mm) in width and not less than 6 feet 8 inches (2032 mm) in height. When installed in exit doorways, exit doors shall be capable of opening at least 90 degrees and shall be so mounted that the clear width of the exit way is not less than 32 inches (813 mm).*

Note: *A sliding glass door can be used as an exterior exit doorway as long as it is operable from the inside and outside and the clear width of the exit way is not less than 32 inches (813mm).*

~~R325.6.3.4~~R335.6.3.4 Intervening rooms. *A means of exit shall not pass through more than one intervening room. A means of egress shall not pass through kitchens, storerooms, closets, garages or spaces used for similar purposes.*

Exception: *Kitchens which do not form separate rooms by construction.*

~~R325.6.4~~R335.6.4 Changes in level. *In Group R-3.1 occupancies housing nonambulatory clients interior changes in level up to 0.25 inch (6 mm) may be vertical and without edge treatment. Changes in level between 0.25 inch (6 mm) and 0.5 inch (12.7 mm) shall be beveled with a slope no greater than 1 unit vertical in 2 units horizontal (50% slope). Changes in level greater than 0.5 inch (12.7 mm) shall be accomplished by means of a ramp.*

~~R325.6.5~~R335.6.5 Stairways. *Group R-3.1 occupancies may continue to use existing stairways (except for winding and spiral stairways which are not permitted as a required means of egress) provided the stairs have a maximum rise of 8 inches (203 mm) with a minimum run of 9 inches (229 mm). The minimum stairway width may be 30 inches (762 mm).*

~~R325.6.6.1~~R335.6.6.1 Doors within floor separations. *Doors within such floor separations shall be tight fitting solid wood at least 1 ⅜ inches (35 mm) in thickness. Door glazing shall not exceed 1296 square inches (32 918 mm^2) with no dimension greater than 54 inches (1372 mm). Such doors shall be positive latching, smoke gasketed and shall be automatic-closing by smoke detection.*

~~R325.6.7~~R335.6.7 Fences and gates. *Grounds of a Residential Care for the Elderly facility serving Alzheimer clients may be fenced and gates therein equipped with locks, provided safe dispersal areas are located not less than 50 feet (15 240 mm) from the buildings. Dispersal areas shall be sized to provide an area of not less than 3 square feet (0.28*

m^2) per occupant. Gates shall not be installed across corridors or passageways leading to such dispersal areas unless they comply with egress requirements.

***~~R325.6.8~~R335.6.8* Basement exits.** *One exit is required to grade level when the basement is accessible to clients.*

***~~R325.6.9~~R335.6.9* Delayed egress locks.** *See Section ~~1008.1.8.6~~1010.1.9.7 of the California Building Code.*

***~~R325.7~~R335.7* Request for alternate means of protection for facilities housing bedridden clients.** *Request for alternate means of protection shall apply to Sections ~~R325~~R335 through ~~R325.7~~R335.7. Request for approval to use an alternative material, assembly or materials, equipment, method of construction, method of installation of equipment, or means of protection shall be made in writing to the local fire authority having jurisdiction by the facility, client or the client's authorized representative. Sufficient evidence shall be submitted to substantiate the need for an alternate means of protection.*

The facility, client or the client's representative or the local fire authority having jurisdiction may request a written opinion from the State Fire Marshal concerning the interpretation of the regulations promulgated by the State Fire Marshal for a particular factual dispute. The State Fire Marshal shall issue the written opinion within 45 days following the request.

Approval of a request for use of an alternative material, assembly or materials, equipment, method of construction, method of installation of equipment, or means of protection made pursuant to this section shall be limited to Group R-3.1 occupancies housing a bedridden client.

Approvals made by the local fire authority having jurisdiction and the written opinion by the State Fire Marshal shall be applicable only to the requesting facility and shall not be construed as establishing any precedent for any future request by that facility or any other facility.

***~~R325.8~~R335.8* Temporarily bedridden clients.** *Clients who become temporarily bedridden as defined in Health and Safety Code Section 1569.72, as enforced by the Department of Social Services, may continue to be housed on any story in Group R-3.1 occupancies classified as Residential Care Facilities for the Elderly (RCFE). Every Residential Care Facility for the Elderly (RCFE) admitting or retaining a bedridden resident shall, within 48 hours of the resident's admission or retention in the facility, notify the local fire authority with jurisdiction of the estimated length of time the resident will retain his or her bedridden status in the facility.*

~~R325.9~~R335.9 *Group R. Buildings housing protective social-care homes or in occupancies housing inmates who are not restrained need not be of one-hour fire- resistive construction when not more than two stories in height. In no case shall individual floor areas exceed 3,000 square feet (279m2). The fire-resistive protection of the exterior walls shall not be less than one hour where such walls are located within 5 feet (1524 mm) of the property line. Openings within such walls are not permitted. Openings in exterior non-rated walls need not be protected.*

SECTION ~~R326~~R336
LARGE FAMILY DAY CARE HOMES

***~~R326.1~~R336.1* Large Family Day-Care Homes.**

~~R326.2~~R336.2 *For purposes of clarification, Health and Safety Code Section 1597.46 is repeated.*

(a) A city, county, or city and county shall not prohibit large family day care homes on lots zoned for single-family dwellings, but shall do one of the following:

(1) Classify these homes as a permitted use of residential property for zoning purposes.

(2) Grant a nondiscretionary permit to use a lot zoned for a single-family dwelling to any large family day care home that complies with local ordinances prescribing reasonable standards, restrictions, and requirements concerning spacing and concentration, traffic control, parking, and noise control relating to such homes, and complies with subdivision (d) and any regulations adopted by the State Fire Marshal pursuant to that subdivision. Any noise standards shall be consistent with local noise ordinances implementing the noise element of the general plan and shall take into consideration the noise level generated by children. The permit issued pursuant

to this paragraph shall be granted by the zoning administrator, if any, or if there is no zoning administrator by the person or persons designated by the planning agency to grant such permits, upon the certification without a hearing.

(3) Require any large family day care home to apply for a permit to use a lot zoned for single-family dwellings. The zoning administrator, if any, or if there is no zoning administrator, the person or persons designated by the planning agency to handle the use permits shall review and decide the applications. The use permit shall be granted if the large family day care home complies with local ordinances, if any, prescribing reasonable standards, restrictions, and requirements concerning spacing and concentration, traffic control, parking, and noise control relating to such homes, and complies with subdivision (d) and any regulations adopted by the State Fire Marshal pursuant to that subdivision.

Any noise standards shall be consistent with local noise ordinances implementing the noise element of the general plan and shall take into consideration the noise levels generated by children.

The local government shall process any required permit as economically as possible, and fees charged for review shall not exceed the costs of the review and permit process. Not less than 10 days prior to the date on which the decision will be made on the application, the zoning administrator or person designated to handle such use permits shall give notice of the proposed use by mail or delivery to all owners shown on the last equalized assessment roll as owning real property within a 100 foot radius of the exterior boundaries of the proposed large family day care home. No hearing on the application for a permit issued pursuant to this paragraph shall be held before a decision is made unless a hearing is requested by the applicant or other affected person. The applicant or other affected person may appeal the decision. The appellant shall pay the cost, if any of the appeal.

(b) A large family day care home shall not be subject to the provisions of Division 13 (commencing with Section 21000) of the Public Resources Code.

(c) Use of a single-family dwelling for the purposes of a large family day care home shall not constitute a change of occupancy for purposes of Part 1.5 (commencing with Section 17910) of Division 13 (State Housing Law), or for purposes of local building and fire codes.

(d) Large family day care homes shall be considered as single-family residences for the purposes of the State Uniform Building Standards Code and local building and fire codes, except with respect to any additional standards specifically designed to promote the fire and life safety of the children in these homes adopted by the State Fire Marshal pursuant to this subdivision.

~~R326.3~~R336.3 Smoke Alarms. *Large family day-care homes shall be equipped with State Fire Marshal approved and listed single station residential type smoke alarms. The number and placement of smoke alarms shall be determined by the enforcement authority.*

~~R326.4~~R336.4 Fire Extinguishers. *Large and small family day-care homes shall be equipped with a portable fire extinguisher having a minimum 2A10BC rating.*

~~R326.5~~R336.5 Fire Alarm Devices. *Every large family day-care home shall be provided with at least one manual device at a location approved by the authority having jurisdiction. Such device shall actuate a fire alarm signal, which shall be audible throughout the facility at a minimum level of 15 db above ambient noise level. These devices need not be interconnected to any other fire alarm device, have a control panel or be electrically supervised or provided with emergency power. Such device or devices shall be attached to the structure and may be of any type acceptable to the enforcing agent, provided that such devices are distinctive in tone and are audible throughout the structure.*

~~R326.6~~R336.6 Compliance. *Every large-family day care home shall comply with the provisions for Group R-3 occupancies and, if appropriate, Section ~~R326.1~~R336.1. For the purposes of Section ~~R326.1~~R336.1, the first story shall be designated as the floor used for residential occupancy nearest to the street level which provides primary access to the building.*

Enforcement of the provisions shall be in accordance with the Health and Safety Code Sections 13145 and 13146. No city, county, city and county, or district shall adopt or enforce any building ordinance or local rule or regulation relating to the subject of fire and life safety in large-family day-care homes which is inconsistent with those standards

adopted by the State Fire Marshal, except to the extent the building ordinance or local rule or regulation applies to single-family residences in which day care is not provided.

***~~R326.7~~R336.7* Special Hazards.** *Every unenclosed gas-fired water heater or furnace which is within the area used for child care in a large family day-care home shall be protected in such a way as to prevent children from making contact with those appliances.*

Exception: *This does not apply to kitchen stoves or ovens.*

***~~R326.8~~R336.8* Exiting.** *Every story or basement of a large family day-care home shall be provided with two exits which are remotely located from each other. Every required exit shall be of a size to permit the installation of a door not less than 32 inches (813mm) in clear width and not less than 6 feet 8 inches (2032 mm) in height. A manually operated horizontal sliding door may be used as one of the two required exits.*

Where basements are used for day-care purposes, one of the two required exits shall provide access directly to the exterior without entering the first story. The second exit from the basement may either pass through the story above or exit directly to the exterior.

Rooms used for day-care purposes shall not be located above the first story.

Exception: *Buildings equipped with an automatic sprinkler system throughout and which have at least one of the required exits providing access directly to the exterior. NFPA 13R may be used in large family day-care homes. The sprinkler omissions of NFPA 13R shall not apply unless approved by the enforcing agency.*

Exit doors, including manually operated horizontal sliding doors, shall be openable from the inside without use of a key or any special knowledge or effort.

SECTION ~~R327~~R337
MATERIALS AND CONSTRUCTION METHODS FOR EXTERIOR WILDFIRE EXPOSURE

SECTION ~~R327.1~~R337.1
SCOPE, PURPOSE, AND APPLICATION

***~~R327.1.1~~R337.1.1* Scope.** *This chapter applies to building materials, systems and or assemblies used in the exterior design and construction of new buildings located within a Wildland-Urban Interface Fire Area as defined in Section ~~R327.2A~~R337.2A.*

***~~R327.1.2~~R337.1.2* Purpose.** *The purpose of this Chapter is to establish minimum standards for the protection of life and property by increasing the ability of a building located in any Fire Hazard Severity Zone within State Responsibility Areas or any Wildland-Urban Interface Fire Area to resist the intrusion of flame or burning embers projected by a vegetation fire and contributes to a systematic reduction in conflagration losses.*

***~~R327.1.3~~R337.1.3* Application.** *New buildings located in any Fire Hazard Severity Zone or any Wildland-Urban Interface Fire Area designated by the enforcing agency constructed after the application date shall comply with the provisions of this chapter.*

Exceptions:

1. *Buildings of an accessory character classified as a Group U occupancy and not exceeding 120 square feet in floor area, when located at least 30 feet from an applicable building.*
2. *Buildings of an accessory character classified as Group U occupancy of any size located least 50 feet from an applicable building.*
3. *Buildings classified as a Group U Agricultural Building, as defined in Section 202 of this code (see also Appendix C – Group U Agricultural Buildings), when located at least 50 feet from an applicable building.*
4. *Additions to and remodels of buildings originally constructed prior to the applicable application date.*

***~~R327.1.3.1~~R337.1.3.1* Application date and where required.** *New buildings for which an application for a building permit is submitted on or after July 1, 2008 located in any Fire Hazard Severity Zone or Wildland Interface Fire Area shall comply with all sections of this chapter, including all of the following areas:*

1. All unincorporated lands designated by the State Board of Forestry and Fire Protection as State Responsibility Area (SRA) including:

1.1. Moderate Fire Hazard Severity Zones
1.2. High Fire Hazard Severity Zones
1.3. Very-High Fire Hazard Severity Zones

2. Land designated as Very-High Fire Hazard Severity Zone by cities and other local agencies.
3. Land designated as Wildland Interface Fire Area by cities and other local agencies.

Exceptions:
1. New buildings located in any Fire Hazard Severity Zone within State Responsibility Areas, for which an application for a building permit is submitted on or after January 1, 2008, shall comply with all sections of this chapter.
2. New buildings located in any Fire Hazard Severity Zone within State Responsibility Areas or any Wildland Interface Fire Area designated by cities and other local agencies for which an application for a building permit is submitted on or after December 1, 2005 but prior to July 1, 2008, shall only comply with the following sections of this chapter:

2.1. Section ~~R327.5~~R337.5 – Roofing
2.2. Section ~~R327.6~~R337.6 – Vents

~~R327.1.4~~R337.1.4 Inspection and certification. *Building permit applications and final completion approvals for buildings within the scope and application of this chapter shall comply with the following:*

1. Building permit issuance The local building official shall, prior to construction, provide the owner or applicant a certification that the building as proposed to be built complies with all applicable state and local building standards, including those for materials and construction methods for wildfire exposure as described in this Chapter. Issuance of a building permit by the local building official for the proposed building shall be considered as complying with this section.
2. Building permit final. The local building official shall, upon completion of construction, provide the owner or applicant with a copy of the final inspection report that demonstrates the building was constructed in compliance with all applicable state and local building standards, including those for materials and construction methods for wildfire exposure as described in this Chapter. Issuance of a certificate of occupancy by the local building official for the proposed building shall be considered as complying with this section.

~~R327.1.5~~R337.1.5 Vegetation management compliance. *Prior to building permit final approval, the property shall be in compliance with the vegetation management requirements prescribed in California Fire Code section 4906, including California Public Resources Code 4291 or California Government Code Section 51182. Acceptable methods of compliance inspection and documentation shall be determined by the enforcing agency and may include any of the following:*

1. Local, state, or federal fire authority or designee authorized to enforce vegetation management requirements.
2. Enforcing agency.
3. Third party inspection and certification authorized to enforce vegetation management requirements.
4. Property owner certification authorized by the enforcing agency.

SECTION ~~R327.2~~R337.2
DEFINITIONS

For the purposes of this chapter, certain terms are defined below:

CDF DIRECTOR *means the Director of the California Department of Forestry and Fire Protection.*

EXTERIOR COVERING. *The exposed siding or cladding material applied to the exterior side of an exterior wall, roof eave soffit, floor projection, or exposed underfloor framing.*

FIRE PROTECTION PLAN *is a document prepared for a specific project or development proposed for a Wildland-Urban Interface Fire Area. It describes ways to minimize and mitigate potential for loss from wildfire exposure. The Fire Protection Plan shall be in accordance with this chapter and the California Fire Code, Chapter 49. When required by the enforcing agency for the purposes of granting modifications, a fire protection plan shall be submitted. Only locally adopted ordinances that have been filed with the California Building Standards Commission or the Department of Housing and Community Development in accordance with Section 1.1.8 shall apply.*

FIRE HAZARD SEVERITY ZONES *are geographical areas designated pursuant to California Public Resources Codes Sections 4201 through 4204 and classified as Very High, High, or Moderate in State Responsibility Areas or as Local Agency Very High Fire Hazard Severity Zones designated pursuant to California Government Code Sections 51175 through 51189. See California Fire Code Article 86.*

The California Code of Regulations, Title 14, Section 1280 entitles the maps of these geographical areas as "Maps of the Fire Hazard Severity Zones in the State Responsibility Area of California."

HEAVY TIMBER. *A type of construction classification specified in Section R602. For use in this Chapter, Heavy Timber shall be sawn lumber or glue laminated wood with the smallest minimum nominal dimension of 4 inches (102 mm). Heavy Timber walls or floors shall be sawn or glue-laminated planks splined, tongue-and-grove, or set close together and well spiked.*

IGNITION-RESISTANT MATERIAL *A type of building material that resists ignition or sustained flaming combustion sufficiently so as to reduce losses from wildland-urban interface conflagrations under worst-case weather and fuel conditions with wildfire exposure of burning embers and small flames, as prescribed in Section ~~703A~~R337.3 and SFM Standard 12-7A-5, Ignition-Resistant Material.*

LOCAL AGENCY VERY HIGH FIRE HAZARD SEVERITY ZONE *means an area designated by a local agency upon the recommendation of the CDF Director pursuant to Government Code Sections 51177(c), 51178 and 5118 that is not a state responsibility area and where a local agency, city, county, city and county, or district is responsible for fire protection.*

LOG WALL CONSTRUCTION. *A type of construction in which exterior walls are constructed of solid wood members and where the smallest horizontal dimension of each solid wood member is at least 6 inches (152 mm).*

RAFTER TAIL. *The portion of roof rafter framing in a sloping roof assembly that projects beyond and overhangs an exterior wall.*

ROOF EAVE. *The lower portion of a sloping roof assembly that projects beyond and overhangs an exterior wall at the lower end of the rafter tails. Roof eaves may be either "open" or "enclosed." Open Roof Eaves have exposed rafter tails and an unenclosed space on the underside of the roof deck. Enclosed Roof Eaves have a boxed-in Roof Eave Soffit with a horizontal underside or sloping rafter tails with an exterior covering applied to the underside of the rafter tails.*

ROOF EAVE SOFFIT. *An enclosed boxed-in soffit under a roof eave with exterior covering material applied to the soffit framing creating a horizontal surface on the exposed underside..*

STATE RESPONSIBILITY AREA *means lands that are classified by the Board of Forestry pursuant to Public Resources Code Section 4125 where the financial responsibility of preventing and suppressing forest fires is primarily the responsibility of the state.*

WILDFIRE *is any uncontrolled fire spreading through vegetative fuels that threatens to destroy life, property, or resources as defined in Public Resources Code Sections 4103 and 4104.*

WILDFIRE EXPOSURE *is one or a combination of radiant heat, convective heat, direct flame contact and burning embers being projected by vegetation fire to a structure and its immediate environment.*

WILDLAND-URBAN INTERFACE FIRE AREA *is a geographical area identified by the state as a "Fire Hazard Severity Zone" in accordance with the Public Resources Code Sections 4201 through 4204 and Government Code Sections 51175 through 51189, or other areas designated by the enforcing agency to be at a significant risk from wildfires.*

SECTION ~~R327.3~~R337.3
STANDARDS OF QUALITY

***~~R327.3.1~~R337.3.1* General.** *Building material, systems, assemblies and methods of construction used in this Chapter shall be in accordance with Section ~~R327.3~~R337.3.*

***~~R327.3.2~~R337.3.2* Qualification by testing.** *Material and material assemblies tested in accordance with the requirements of Section ~~703A~~R337.3 shall be accepted for use when the results and conditions of those tests are met. Product evaluation testing of material and material assemblies shall be approved or listed by the State Fire Marshal, or identified in a current report issued by an approved agency.*

***~~R327.3.3~~R337.3.3* Approved agency.** *Product evaluation testing shall be performed by an approved agency as defined in Section 1702 of the California Building Code. The scope of accreditation for the approved agency shall include building product compliance with code.*

***~~R327.3.4~~R337.3.4* Labeling.** *Material and material assemblies tested in accordance with the requirements of section ~~R327.3~~R337.3 shall bear an identification label showing the fire test results. That identification label shall be issued by a testing and/or inspecting agency approved by the State Fire Marshal.*

1. *Identification mark of the approved testing and/or inspecting agency.*
2. *Contact and identification information of the manufacturer.*
3. *Model number or identification of the product or material.*
4. *Pre-test weathering specified in this chapter.*
5. *Compliance standard as described under Section ~~R327.3.7~~R337.3.7.*

***~~R327.3.5~~R337.3.5* Weathering and surface treatment protection.**

***~~R327.3.5.1~~R337.3.5.1* General.** *Material and material assemblies tested in accordance with the requirements of Section ~~703A~~R337.3 shall maintain their fire test performance under conditions of use when installed in accordance with the manufacturers instructions.*

***~~R327.3.5.2~~R337.3.5.2* Weathering.** *Fire-retardant-treated wood and Fire-retardant-treated wood shingles and shakes shall meet the fire test performance requirements of this Chapter after being subjected to the weathering conditions contained in the following standards, as applicable to the materials and the conditions of use.*

***~~R327.3.5.2.1~~R337.3.5.2.1* Fire-retardant-treated wood.** *Fire-retardant-treated wood shall be tested in accordance with ASTM D 2898, "Standard Practice for Accelerated Weathering of Fire-Retardant Treated Wood for Fire Testing (Method A)" and the requirements of section 2303.2 of the California Building Code.*

***~~R327.3.5.2.2~~R337.3.5.2.2* Fire-retardant-treated wood shingles and shakes.** *Fire-retardant-treated wood shingles and shakes shall be approved and listed by the State Fire Marshal in accordance with Section 208(c), Title 19 California Code of Regulations.*

***~~R327.3.5.3~~R337.3.5.3* Surface treatment protection.** *The use of paints, coatings, stains, or other surface treatments are not an approved method of protection as required in this section.*

***~~R327.3.6~~R337.3.6* Alternates for materials, design, tests, and methods of construction.** *The enforcing agency is permitted to modify the provisions of this chapter for site-specific conditions in accordance with Section 1.11.2.4. When required by the enforcing agency for the purposes of granting modifications, a fire protection plan shall be submitted in accordance with the California Fire Code, Chapter 49.*

***~~R327.3.7~~R337.3.7* Standards of quality.** *The State Fire Marshal standards for exterior wildfire exposure protection listed below and as referenced in this chapter are located in the California Referenced Standards Code, Part 12 and Chapter 35 of this code.*

> ***SFM Standard 12-7A-1,*** *Exterior Wall Siding and Sheathing. A fire resistance test standard consisting of a 150 kW intensity direct flame exposure for a 10 minutes duration.*

SFM Standard 12-7A-2, *Exterior Windows. A fire resistance test standard consisting of a 150 kW intensity direct flame exposure for a 8 minutes duration.*
SFM Standard 12-7A-3, *. Horizontal Projection Underside A fire resistance test standard consisting of a 300 kW intensity direct flame exposure for a 10 minute duration.*
SFM Standard 12-7A- *4, Decking. A two-part test consisting of a heat release rate (Part A) deck assembly combustion test with an under deck exposure of 80 kW intensity direct flame for a 3 minute duration, and a (Part B) sustained deck assembly combustion test consisting of a deck upper surface burning ember exposure with a 12 mph wind for 40 minutes using a 2.2 lb (1 kg) burning "Class A" size 12" x 12" x 2.25" (300 mm x 300 mm x 57 mm) roof test brand.*
SFM Standard 12-7A-4A, *Decking Alternate Method A. A heat release rate deck assembly combustion test with an under deck exposure of 80 kW intensity direct flame for a 3 minute duration,*
SFM Standard 12-7A-5, *Ignition-resistant Material. A generic building material surface burning flame spread test standard consisting of an extended 30 minute ASTM E84 or UL 723 test method as is used for Fire-Retardant-Treated wood.*

SECTION ~~R327.4~~R337.4
IGNITION RESISTANT CONSTRUCTION

~~R327.4.1~~R337.4.1 General. *The materials prescribed herein for ignition resistance shall conform to the requirements of this chapter.*

~~R327.4.2~~R337.4.2 Ignition-Resistant Material. *Ignition-resistant material shall be determined in accordance with the test procedures set forth in SFM Standard 12-7A-5 "Ignition-Resistant Material" or in accordance with this section.*

~~R327.4.3~~R337.4.3 Alternative methods for determining Ignition-resistant material. *Any one of the following shall be accepted as meeting the definition of ignition-resistant material:*

1. *Noncombustible material. Material that complies with the definition for noncombustible materials in Section 202.*
2. *Fire-retardant-treated wood. Fire-retardant-treated wood identified for exterior use that complies with the requirements of Section 2303.2 of the California Building Code.*
3. *Fire-retardant-treated wood shingles and shakes. Fire-retardant-treated wood shingles and shakes, as defined in Section 1505.6 of the California Building Code and listed by State Fire Marshal for use as "Class B" roof covering, shall be accepted as an Ignition-resistant wall covering material when installed over solid sheathing.*

SECTION ~~R327.5~~R337.5
ROOFING

~~R327.5.1~~R337.5.1 General. *Roofs shall comply with the requirements of Section ~~R327~~R337 and Section R902. Roofs shall have a roofing assembly installed in accordance with its listing and the manufacturer's installation instructions.*

~~R327.5.2~~R337.5.2 Roof coverings. *Where the roof profile allows a space between the roof covering and roof decking, the spaces shall be constructed to prevent the intrusion of flames and embers, be firestopped with approved materials or have one layer of minimum 72 pound (32.4 kg) mineral-surfaced nonperforated cap sheet complying with ASTM D 3909 installed over the combustible decking.*

~~R327.5.3~~R337.5.3 Roof valleys. *Where valley flashing is installed, the flashing shall be not less than 0.019-inch (0.48 mm) No. 26 gage galvanized sheet corrosion-resistant metal installed over not less than one layer of minimum 72-pound (32.4 kg) mineral-surfaced nonperforated cap sheet complying with ASTM D 3909, at least 36-inch-wide (914 mm) running the full length of the valley.*

~~R327.5.4~~R337.5.4 Roof Gutters. *Roof gutters shall be provided with the means to prevent the accumulation of leaves and debris in the gutter.*

SECTION ~~R327.6~~R337.6
VENTS

***~~R327.6.1~~R337.6.1* General.** *Where provided, ventilation openings for enclosed attics, enclosed eave soffit spaces, enclosed rafter spaces formed where ceilings are applied directly to the underside of roof rafters, and underfloor ventilation shall be in accordance with Section 1203 of the California Building Code and Sections ~~R327.6.1~~R337.6.1 through ~~R327.6.3~~R337.6.3 of this Section to resist building ignition from the intrusion of burning embers and flame through the ventilation openings.*

SECTION ~~R327.7~~R337.7
EXTERIOR COVERING

***~~R327.7.1~~R337.7.1* Scope.** *The provisions of this section shall govern the materials and construction methods used to resist building ignition and/or safeguard against the intrusion of flames resulting from small ember and short-term direct flame contact exposure.*

***~~R327.7.2~~R337.7.2* General.** *The following exterior covering materials and/or assemblies shall comply with this section:*

1. *Exterior wall covering material.*
2. *Exterior wall assembly.*
3. *Exterior exposed underside of roof eave overhangs,*
4. *Exterior exposed underside of roof eave soffits.*
5. *Exposed underside of exterior porch ceilings.*
6. *Exterior exposed underside of floor projections.*
7. *Exterior underfloor areas.*

Exceptions:
1. *Exterior wall architectural trim, embellishments, fascias, and gutters.*
2. *Roof or wall top cornice projections and similar assemblies.*
3. *Roof assembly projections over gable end walls..*
4. *Solid wood rafter tails and solid wood blocking installed between rafters having minimum dimension 2 inch (50.8 mm) nominal.*
5. *Deck walking surfaces shall comply with Section ~~R327.9~~R337.9 only.*

***~~R327.7.3~~R337.7.3* Exterior Walls.** *The exterior wall covering or wall assembly shall comply with one of the following requirements:*

1. *Non-combustible material.*
2. *Ignition-resistant material.*
3. *Heavy timber exterior wall assembly.*
4. *Log wall construction assembly.*
5. *Wall assemblies that meet the performance criteria in accordance with the test procedures for a 10-minute direct flame contact exposure test set forth in SFM Standard 12-7A-1.*

Exception: *Any of the following shall be deemed to meet the assembly performance criteria and intent of this section:*
1. *One layer of 5/8-inch Type X gypsum sheathing applied behind the exterior covering or cladding on the exterior side of the framing.*
2. *The exterior portion of a 1-hour fire resistive exterior wall assembly designed for exterior fire exposure including assemblies using the gypsum panel and sheathing products listed in the Gypsum Association Fire Resistance Design Manual.*

***~~R327.7.3.1~~R337.7.3.1* Extent of exterior wall covering.** *Exterior wall coverings shall extend from the top of the foundation to the roof, and terminate at 2 inch (50.8 mm) nominal solid wood blocking between rafters at all roof overhangs, or in the case of enclosed eaves, terminate at the enclosure.*

***~~R327.7.4~~R337.7.4* Open roof eaves.** *The exposed roof deck on the underside of unenclosed roof eaves shall consist of one of the following:*
1. *Non-combustible material.*
2. *Ignition-resistant material.*

3. *One layer of 5/8-inch Type X gypsum sheathing applied behind an exterior covering on the underside exterior of the roof deck.*
4. *The exterior portion of a 1-hour fire resistive exterior wall assembly applied to the underside of the roof deck designed for exterior fire exposure including assemblies using the gypsum panel and sheathing products listed in the Gypsum Association Fire Resistance Design Manual.*

Exceptions: *The following materials do not require protection:*
1. *Solid wood rafter tails on the exposed underside of open roof eaves having a minimum nominal dimension of 2 inch (50.8 mm).*
2. *Solid wood blocking installed between rafter tails on the exposed underside of open roof eaves having a minimum nominal dimension of 2 inch (50.8 mm).*
3. *Gable end overhangs and roof assembly projections beyond an exterior wall other than at the lower end of the rafter tails.*
4. *Fascia and other architectural trim boards.*

SECTION ~~R327.8~~R337.8
EXTERIOR WINDOWS AND DOORS

~~R327.8.1~~R337.8.1 General

~~R327.8.2~~R337.8.2 Exterior glazing. *The following exterior glazing materials and/or assemblies shall comply with this section:*

1. *Exterior windows.*
2. *Exterior glazed doors.*
3. *Glazed openings within exterior doors.*
4. *Glazed openings within exterior garage doors.*
5. *Exterior structural glass veneer.*

~~R327.8.2.1~~R337.8.2.1 Exterior windows and exterior glazed door assembly requirements. *Exterior windows and exterior glazed door assemblies shall comply with one of the following requirements:*

1. *Be constructed of multi-pane glazing with a minimum of one tempered pane meeting the requirements of Section ~~2406~~308 Safety Glazing, or*
2. *Be constructed of glass block units, or*
3. *Have a fire-resistance rating of not less than 20 minutes when tested according to NFPA 257, or*
5. *Be tested to meet the performance requirements of SFM Standard 12-7A-2.*

~~R327.8.2.2~~R337.8.2.2 Structural glass veneer. *The wall assembly behind structural glass veneer shall comply with section ~~R327.7.3~~R337.7.3.*

~~R327.8.3~~R337.8.3 Exterior doors. *Exterior doors shall comply with one of the following:*

1. *The exterior surface or cladding shall be of noncombustible or Ignition-resistant material, or*
2. *Shall be constructed of solid core wood that comply with the following requirements:*

   2.1. Stiles and rails shall not be less than 1 3/8 inches thick
   2.2. Raised panels shall not be less than 1 1/4 inches thick, except for the exterior perimeter of the raised panel that may taper to a tongue not less than 3/8 inch thick.

3. *Shall have a fire-resistance rating of not less than 20 minutes when tested according to NFPA 252.*
4. *Shall be tested to meet the performance requirements of SFM Standard 12-7A-1.*

~~R327.8.3.1~~R337.8.3.1 Exterior door glazing. *Glazing in exterior doors shall comply with Section ~~708A.2.1~~R337.8.2.1.*

SECTION ~~R327.9~~R337.9

DECKING

***~~R327.9.1~~R337.9.1* General** *The walking surface material of decks, porches, balconies and stairs shall comply with the requirements of this section.*

***~~R327.9.2~~R337.9.2* Where required.** *The walking surface material of decks, porches, balconies and stairs shall comply with the requirements of this section when any portion of such surface is within 10 feet (3048 mm) of the building.*

***~~R327.9.3~~R337.9.3* Decking Surfaces.** *The walking surface material of decks, porches, balconies and stairs shall be constructed with one of the following materials:*

1. *Ignition-resistant material that complies with the performance requirements of both SFM Standard 12-7A-4 and SFM Standard 12-7A-5.*
2. *Exterior fire retardant treated wood*
3. *Noncombustible material.*
4. *Any material that complies with the performance requirements of SFM Standard 12-7A-4A when attached exterior wall covering is also either noncombustible or ignition-resistant material.*

Exception: *Wall material may be of any material that otherwise complies with this chapter when the decking surface material complies with the performance requirements ASTM E-84 with a Class B flame spread rating.*

SECTION ~~R327.10~~R337.10
ACCESSORY STRUCTURES

***~~R327.10.1~~R337.10.1* General.** *Accessory and miscellaneous structures, other than buildings covered by Section ~~701A.3~~ R337.1.3, which pose a significant exterior exposure hazard to applicable buildings during wildfires shall be constructed to conform to the ignition resistance requirements of this section.*

***~~R327.10.2~~R337.10.2* Applicability.** *The provisions of this section shall apply to trellises, arbors, patio covers, carports, gazebos, and similar structures of an accessory or miscellaneous character.*

Exceptions.

1. *Decks shall comply with the requirements of Section ~~709A~~R327.9.*
2. *Awnings and canopies shall comply with the requirements of Section 3105 of the California Building Code.*

***~~R327.10.3~~R337.10.3* Where Required.** *Accessory structures shall comply with the requirements of this section.*

~~R327.10.3.1~~R337.10.3.1 *Attached accessory structures shall comply with the requirements of this section.*

~~R327.10.3.2~~R337.10.3.2 *When required by the enforcing agency, detached accessory structures within 50 feet of an applicable building shall comply with the requirements of this section.*

***~~R327.10.4~~R337.10.4* Requirements.** *When required by the enforcing agency accessory structures shall be constructed of noncombustible or ignition-resistant materials.*

SECTION ~~R328~~R338
ELECTRIC VEHICLE

***~~R328.1~~R338.1* Electric vehicle.** *An automotive-type vehicle for highway use, such as passenger automobiles, buses, trucks, vans and the like, primarily powered by an electric motor that draws current from a rechargeable storage battery, fuel cell, photovoltaic array or other source of electric current. For the purpose of this chapter, electric motorcycles and similar type vehicles and off-road self-propelled electric vehicles such as industrial trucks, hoists, lifts, transports, golf carts, airline ground support equipment, tractors, boats and the like, are not included*

***~~R328.2~~R338.2* Charging.** *In any building or interior area used for charging electric vehicles, electrical equipment shall be installed in accordance with the California Electrical Code.*

***~~R328.3~~R338.3* Ventilation.** *Mechanical exhaust ventilation, when required by the California Electrical Code shall be provided at a rate as required by Article 625 or as required by Section 1203 of the California Building Code whichever is greater. The ventilation system shall include both the supply and exhaust equipment and shall be permanently installed and located to intake supply air from the outdoors, and vent the exhaust directly to, the outdoors without conducting the exhaust air through other spaces within the building.*

Exception: *Positive pressure ventilation systems shall only be allowed in buildings or areas that have been designed and approved for that application.*

***~~R328.4~~R338.4* Electrical interface.** *The electrical supply circuit to electrically powered mechanical ventilation equipment shall be interlocked with the recharging equipment used to supply the vehicle(s) being charged, and shall remain energized during the entire charging cycle. Electric vehicle recharging equipment shall be marked or labeled in accordance with the California Electrical Code.*

Exceptions:
1. *Exhaust ventilation shall not be required in areas with an approved engineered ventilation system, which maintains a hydrogen gas concentration at less than 25 percent of the lower flammability limit.*
2. *Mechanical exhaust ventilation for hydrogen shall not be required where the charging equipment utilized is installed and listed for indoor charging of electric vehicles without ventilation.*

CHAPTER 9
ROOF ASSEMBLIES

R902.1 Roofing covering materials. Roofs shall be covered with materials as set forth in Sections R904 and R905. *A minimum* Class A, B or C roofing shall be installed in ~~*Class A, B or C roofing shall be installed in*~~ *areas designated by this section* ~~jurisdictions designated by law as requiring their use~~ or where the edge of the roof is less than 3 feet (914 mm) from a lot line. Class A, B and C roofing required by this section to be listed shall be tested in accordance with UL 790 or ASTM E 108.

Exceptions:
1. Class A roof assemblies include those with coverings of brick, masonry and exposed concrete roof deck.
2. Class A roof assemblies include ferrous or copper shingles or sheets, metal sheets and shingles, clay or concrete roof tile, or slate installed on noncombustible decks.
3. Class A roof assemblies include minimum 16 oz/ft2 copper sheets installed over combustible decks.
4. Class A roof assemblies include slate installed over underlayment over combustible decks.

R902.1.1 Roof coverings within Very-High Fire Hazard Severity Zones. *The entire roof covering of every existing structure where more than 50 percent of the total roof area is replaced within any one-year period, the entire roof covering of every new structure, and any roof covering applied in the alteration, repair or replacement of the roof of every existing structure, shall be a fire-retardant roof covering that is at least Class A.*

Exception: *The requirements shall not apply in any jurisdiction that adopts the model ordinance approved by the State Fire Marshal pursuant to Section 51189 of the Government Code or an ordinance that substantially conforms to the model ordinance and transmits a copy to the State Fire Marshal.*

R902.1.2 Roof coverings within State Responsibility Areas. *The entire roof covering of every existing structure where more than 50 percent of the total roof area is replaced within any one-year period, the entire roof covering of every new structure, and any roof covering applied in the alteration, repair or replacement of the roof of every existing structure, shall be a fire-retardant roof covering that is at least Class B.*

Exception: *Areas designated as moderate fire hazard severity zones.*

R902.1.3 Roof coverings in all other areas. *The entire roof covering of every existing structure where more than 50 percent of the total roof area is replaced within any one-year period, the entire roof covering of every new structure, and any roof covering applied in the alteration, repair or replacement of the roof of every existing structure, shall be a fire-retardant roof covering that is at least Class C.*

R902.1.4 Roofing requirements a Wildland-Urban Interface Fire Area. *Roofing requirements for structures located in a Wildland-Urban Interface Fire Area shall also comply with Section ~~R327.5~~337.5.*

R902.2 Fire-retardant-treated shingles and shakes. Fire-retardant-treated wood shakes and shingles *are wood shakes and shingles complying with UBC Standard 15-3 or 15-4 which are impregnated by the full-cell vacuum-pressure process with fire-retardant chemicals, and which have been qualified by UBC Standard 15-2 for use on Class A, B or C roofs. Fire-retardant-treated wood shakes and shingles shall comply with ICC-ES EG107 and with the weathering requirements contained in Health and Safety Code Section 13132.7 (j). Each bundle shall bear labels from an ICBO accredited quality control agency identifying their roof-covering classification and indicating their compliance with ICC-ES EG107 and with the weathering requirements contained in Health and Safety Code Section 13132.7 (j).*

Health and Safety Code Section 13132.7 (j) No wood roof covering materials shall be sold or applied in this state unless both of the following conditions are met:

(1) The materials have been approved and listed by the State Fire Marshal as complying with the requirements of this section.
(2) The materials have passed at least five years of the 10-year natural weathering test. The 10-year natural weathering test required by this subdivision shall be conducted in accordance with Standard 15-2 of the 1994 edition of the Uniform Building Code at a testing facility recognized by the State Fire Marshal.

[Editors Note: Repeal existing CA amendment to R902.3. Keep model code text with CA amendment below]
R902.3 Building-integrated photovoltaic product. Building- integrated photovoltaic products installed as the roof covering shall be tested, listed and labeled for fire classification in accordance with Section R902.1 *through R902.1.4.*
~~***R902.3 Building integrated photovoltaic systems.*** *Rooftop installed building integrated photovoltaic systems that serve as the roof covering shall be listed and labeled for fire classification in accordance with Section R902.1 through R902.1.4.*~~

[Editors Note: Repeal existing CA amendment to R902.4. Keep model code text with CA amendment below]
R902.4 Rooftop-mounted photovoltaic panels and modules. Rooftop-mounted photovoltaic panel~~s and modules~~ *systems* installed on or above the roof covering shall be tested, listed and identified with a fire classification in accordance with UL 1703. Class A, B or C photovoltaic panels and modules shall be installed *areas designated by this section,* in jurisdictions designated by law as requiring their use, or where the edge of the roof is less than 3 feet (914 mm) from a lot line.
~~***R902.4 Photovoltaic panels and modules.*** *Effective January 1, 2015, Rooftop mounted photovoltaic systems shall be tested, listed and identified with a fire classification in accordance with UL 1703. The fire classification shall comply with Table 1505.1 of the California Building Code based on the type of construction of the building.*~~

SECTION ~~R908~~R918
SOLAR PHOTOVOLTAIC PANELS/MODULES

~~***R908.1***~~***R918.1*** ***Photovoltaic systems.*** *Rooftop mounted photovoltaic shall be designed in accordance with this section.*

~~***R908.1.2***~~***R918.1.2*** **(IBC/CBC 1509.7.1 Not an SFM provision. Reserved for other agencies)**

~~***R908.1.3***~~***R918.1.3*** ***Fire classification.*** *Rooftop mounted photovoltaic systems shall have the fire classification as required by Section R902.4.*

~~***R908.1.4***~~***R918.1.4*** ***Installation.*** *Rooftop mounted photovoltaic systems shall be installed in accordance with the manufacturer's installation instructions.*

~~***R908.1.5***~~***R918.1.5*** ***Photovoltaic panels and modules.*** *Photovoltaic panels and modules mounted on top of a roof shall be listed and labeled in accordance with UL 1703 and shall be installed in accordance with the manufacturer's installation instructions.*

~~R908.1.6~~R918.1.6 Fire safety provisions for photovoltaic panels/modules. *Solar photovoltaic panels/modules installed upon a roof or as an integral part of a roof assembly shall comply with the requirements of this code (see Section ~~R331~~R224) and the California Fire Code.*

CHAPTER 10
CHIMNEYS AND FIREPLACES

R1003.9.2 Spark arrestors. *All chimneys attached to any appliance or fireplace that burns solid fuel shall be equipped with an approved spark arrester.* The spark arrestor shall meet all of the following requirements:

1. The net free area of the arrestor shall be not less than four times the net free area of the outlet of the chimney flue it serves.
2. The arrestor screen shall have heat and corrosion resistance equivalent to *12 gage wire*, 19-gage galvanized steel or 24-gage stainless steel.
3. Openings shall not permit the passage of spheres having a diameter greater than 1/2 inch (12.7 mm) nor block the passage of spheres having a diameter less than 3/8 inch (9.5 mm).
4. The spark arrestor shall be accessible for cleaning and the screen or chimney cap shall be removable to allow for cleaning of the chimney flue.

CHAPTER 44
REFERENCED STANDARDS

ANSI American National Standards Institute
25 West 43rd Street, Fourth Floor
New York, NY 10036

Standard reference number	Title	Referenced in code section number
S3.41	*American National Standard Audible Evacuation Signal*	*R325.5.2.1*

ASTM ASTM International
100 Barr Harbor Drive
West Conshohocken, PA 19428

Standard reference number	Title	Referenced in code section number
D 2898—04	Test Methods for Accelerated Weathering of Fire-retardant-treated Wood for Fire Testing	R802.1.3.4, R802.1.3.6, *R327.4*
D 3201—07	Test Method for Hygroscopic Properties of Fire-retardant Wood and Wood-base Products	R802.1.3.7, *R327.4*
D 3909—97b(2004)e01	Specification for Asphalt Roll Roofing (Glass Felt) Surfaced with Mineral Granules	R905.2.8.2, R905.5.4, Table R905.9.2, *R327.6.1.2, R327.6.1.3*
E 84—07	Test Method for Surface Burning Characteristics of Building Materials	R202, R302.9.3, R302.9.4, R302.10.1, R302.10.2, R316.3, R316.5.9, R316.5.11, *R327.9.3.4*, R802.1.3

ICC

International Code Council, Inc.
500 New Jersey Avenue, NW 6th Floor
Washington, DC 20001

Standard reference number	Title	Referenced in code section number
ICC-ES EG107	*Evaluation guideline for determination of Volatile Organic Compound (voc) content*	*R902*

NFPA

National Fire Protection Association
1 Batterymarch Park
Quincy, MA 02169

Standard reference number	Title	Referenced in code section number
	Installation of Sprinkler Systems *as amended**	R302.3

See CCR, Title 24 Part 2 California Building Code, Chapter 35 or CCR, Title 24, Part 9 California Fire Code, Chapter ~~47~~80 for amendments to NFPA 13.

NFPA 13, Amended Sections as follows:

~~Revise Section 8.15.5.6.17 as follows:~~ Add new Sections 8.15.5.6.1 as follows:

~~8.15.5.7~~8.15.5.6.1 The sprinkler required at the top and bottom of the elevator hoistway by 8.15.5.6 shall not be required where permitted by Chapter 30 of the California Building Code.

Revise Section 8.15.7.2* as follows:

8.15.7.2* Sprinklers shall be permitted to be omitted where the exterior canopies, roofs, porte-cocheres, balconies, decks, or similar projections are constructed with materials that are noncombustible, limited-combustible, or fire retardant treated wood as defined in NFPA 703, *Standard for Fire Retardant–Treated Wood and Fire-Retardant Coatings for Building Materials.*

Revise Section 8.15.7.3

8.15.7.3 Sprinklers shall be permitted to be omitted from below the canopies, roofs, balconies, decks, or similar projections are combustible construction, provided the exposed finish material on the roof, *or* canopy is noncombustible, limited-combustible, or fire retardant treated wood as defined in NFPA 703, *Standard for Fire Retardant–Treated Wood and Fire-Retardant Coatings for Building Materials*, and the roofs, *or* canopies contains only sprinklered concealed spaces or any of the following unsprinklered combustible concealed spaces:

13—~~13~~16

(1) Combustible concealed spaces filled entirely with noncombustible insulation

(2) Light or ordinary hazard occupancies where noncombustible or limited-combustible ceilings are directly attached to the bottom of solid wood joists so as to create enclosed joist spaces 160 ft^3 (4.5 m^3) or less in volume, including space below insulation that is laid directly on top or within the ceiling joists in an otherwise sprinklered attic *[See ~~11.2.3.1.4(8)(d)~~11.2.3.1.5.2(9)].*

(3) Concealed spaces over isolated small roofs, or canopies not exceeding 55 ft^2 (5.1

Add new Sections ~~8.16.1.7, 8.16.1.7.1, 8.16.1.7.1.1, 8.16.1.7.1.2, 8.16.1.7.1.2, 8.16.1.7.1.3, 8.16.1.7.2,~~ 8.16.1.6, 8.16.1.6.1, 8.16.1.6.1.1, 8.16.1.6.1.2, 8.16.1.6.1.3, 8.16.1.6.2 as follows:

~~8.16.1.7~~8.16.1.6 Sectional Valves.

~~8.16.1.7.1~~8.16.1.6.1 Private fire service main systems shall have sectional control valves at appropriate points in order to permit sectionalizing the system in the event of a break or for the making of repairs or extensions.

~~8.16.1.7.1.1~~8.16.1.6.1.1 Sectional control valves are not required when the fire service main system serves less than six fire appurtenances.

~~8.16.1.7.1.2~~8.16.1.6.1.2 Sectional control valves shall be indicating valves in accordance with Section ~~6.7.1.3~~6.6.1.3.

~~8.16.1.7.1.3~~8.16.1.6.1.3 Sectional control valves shall be located so that no more than five fire appurtenances are affected by shut-down of any single portion of the fire service main. Each fire hydrant, fire sprinkler system riser, and standpipe riser shall be considered a separate fire appurtenance. In-rack sprinkler systems shall not be considered as a separate appurtenance.

~~8.16.1.7.1.4~~8.16.1.6.1.4 The number of fire appurtenances between sectional control valves is allowed to be modified by the authority having jurisdiction.

~~8.16.1.7.2~~8.16.1.6.2 A valve shall be provided on each bank where a main crosses a *body of* water *or* outside the building foundation(s) where the main or section of main runs under a building.

Revise Section 9.3.5.11.4 as follows:
9.3.5.11.4 *Where threaded pipe is used for sway bracing, it shall have a wall thickness of not less ~~then~~than Schedule 40.*

Replace Section ~~9.3.5.12.4~~9.3.5.12.5 as follows:
9.3.5.12.5 Lag screws or power-driven fasteners shall not be used to attach braces to the building structure.

~~Add language to the beginning of~~ Replace Section ~~9.3.5.12.6~~9.3.5.12.6 as follows:
~~9.3.5.12.6~~9.3.5.12.6 Fastening methods other than those identified in ~~9.3.5.9~~9.3.5.12 shall not apply to other fastening methods, which shall be acceptable for use if certified by a registered professional engineer to support the loads determined in accordance with the criteria in 9.3.5.6. Calculations shall be submitted *to* the authority having jurisdiction.

Revise Section ~~9.3.5.12.7.2~~9.3.5.12.8.4 as follows:
~~9.3.5.12.7.2~~9.3.5.12.8.4 Concrete anchors other than those shown in ~~Figure 9.3.5.12.1~~Table 9.3.5.12.2(a) through Table 9.3.5.12.2(f) *and identified in 9.3.5.11.11* shall be acceptable for use where designed in accordance with the requirements of the building code and certified by a registered professional engineer.

Revise Section ~~10.6.4~~10.4.3.1.1 as follows:
~~10.6.4~~10.4.3.1.1 Pipe joints shall not be located under foundation footings. *The pipe under the building or building foundation shall not contain mechanical joints.*

Exceptions:
1. Where allowed in accordance with ~~10.6.2~~10.4.3.2
2. Alternate designs may be utilized where designed by a registered professional engineer and approved by the enforcing agency.

Revise Section ~~11.2.3.1.4(4)(i)~~11.2.3.1.5.2(9) as follows:
~~11.2.3.1.4(4)(i)~~11.2.3.1.5.2(9) Exterior columns under 10 ft² (0.93m2) in *total* area, formed by studs or wood joist, *with no sources of ignition within the column*, supporting exterior canopies that are fully protected with a sprinkler system.

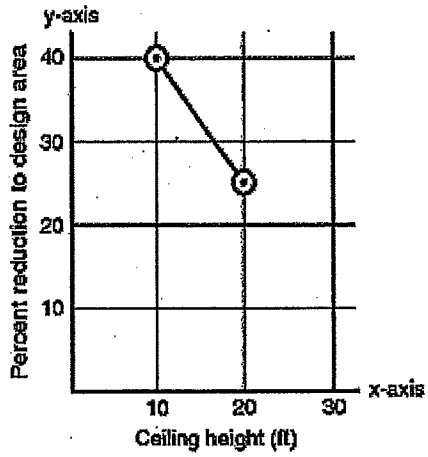

Note: $y = \frac{-3x}{2} + 55$

For ceiling height ≥ 10 ft and ≤ 20 ft, $y = \frac{-3x}{2} + 55$

For ceiling height < 10 ft, $y = 40$

For ceiling height > 20, $y = 0$

For SI units, 1 ft = 0.31 m.

~~FIGURE 11.2.3.2.3.1 Design Area Reduction for Quick-Response Sprinklers.~~

~~Add Section 25.1(5)~~Revise Section 25.1 as follows:

25.1 Approval of Sprinkler Systems and Private Fire Service Mains. The installing contractor shall do the following:

(1) Notify the authority having jurisdiction and the property owner or property owner's authorized representative of the time and date testing will be performed.

(2) Perform all required testing *(see Section ~~24.2~~25.2)*

(3) Complete and sign the appropriate contractor's material and test certificate(s) *(see Figure ~~24.1~~25.1)*

(4) Remove all caps and straps prior to placing the sprinkler system in service

(5) Upon system acceptance by the authority having jurisdiction a label prescribed by Title 19 California Code of Regulations, Chapter 5 shall be affixed to each system riser.

Revise Section 25.4~~(2) and Add Section 24.5(3)~~ as follows:

25.4 Instructions. The installing contractor shall provide the property owner or the property owner's authorized representative with the following:

(1) All literature and instructions provided by the manufacturer describing proper operation and maintenance of any equipment and devices installed

(2) NFPA 25, *Standard for the Inspection, testing, and maintenance of Water-Based Fire Protection Systems, 2013 California Edition*

(3) Title 19, California Code of Regulations, Chapter 5, "Fire Extinguishing Systems".

~~Add sentence at the end of~~ Revise Section 25.5.1 as follows:

25.5.1 The installing contractor shall identify a hydraulically designed sprinkler system with a permanently marked weatherproof metal or rigid plastic sign secured with corrosion resistant wire, chain, or other approved means. Such signs shall be placed at the alarm valve, dry pipe valve, preaction valve, or deluge valve supplying the corresponding hydraulically designed area. *Pipe schedule systems shall be provided with a sign indicating that the system was designed and installed as a pipe schedule system and the hazard classification(s) included in the design."*

Revise Section 25.5.2~~(3) and Add Sections 25.5.2(7) to (14)~~ as follows:

25.5.2 The sign shall include the following information:

(1) Location of the design area or areas

(2) Discharge densities over the design area or areas

(3) *Required flow and pressure of the system at the base of the riser*
(4) Occupancy classification or commodity classification and maximum permitted storage height and configuration
(5) Hose stream allowance included in addition to the sprinkler demand
(6) The name of the installing contractor
(7) Required flow and pressure of the system at the water supply source.
(8) Required flow and pressure of the system at the discharge side of the fire pump where a fire pump is installed.
(9) Type or types and number of sprinklers or nozzles installed including the orifice size, temperature rating, orientation, K-Factor, sprinkler identification number (SIN) for sprinkler heads when applicable, and response type.
(10) The minimum discharge flow rate and pressure required from the hydraulically most demanding sprinkler.
(11) The required pressure settings for pressure reducing valves.
(12) For deluge sprinkler systems, the required flow and pressure at the hydraulically most demanding sprinkler or nozzle.
(13) The protection area per sprinkler based on the hydraulic calculations
(14) The edition of NFPA 13 to which the system was designed and installed.

Revise Section 25.6.1 as follows:
25.6.1 The installing contractor shall provide a general information sign used to determine system design basis and information relevant to the inspection, testing, and maintenance requirements required by ~~*California Edition*~~ NFPA 25, *Standard for the Inspection, Testing, and Maintenance of Water-Based Fire Protection Systems, 2013 California Edition.*

13D—~~13~~*16* Standard for the Installation of Sprinkler Systems in One-and Two-Family Dwellings and Manufactured Homes *as amended**..... *R313.1.1*, R313.2.1, *R313.3.1, R313.3.2, R313.3.2.3.1, R313.3.2.4.2, R313.3.6.1*

****NFPA 13D, Amended Sections as follows:***

Revise Section 6.2.2~~, 6.2.2.1, 6.2.4~~ to read as follows:
6.2.2 Where a *well*, pump, tank *or combination thereof* is the source of supply for a fire sprinkler system, *the water supply shall serve both domestic and fire sprinkler systems, and* the following shall be met:
(1) A test connection shall be provided downstream of the pump that creates a flow of water equal to the smallest sprinkler on the system. The connection shall return water to the tank.
(2) Any disconnecting means for the pump shall be approved.
(3) A method for refilling the tank shall be piped to the tank.
(4) A method of seeing the water level in the tank shall be provided without having to open the tank.
(5) The pump shall not be permitted to sit directly on the floor.

Add new Section 6.2.2.1 as follows:
6.2.2.1 *Where a fire sprinkler system is supplied by a stored water source with an automatically operated means of pressurizing the system other than an electric pump, the water supply may serve the sprinkler system only.*

Add new Section 6.2.4 as follows:
6.2.4 *Where a water supply serves both domestic and fire sprinkler systems, 5 gpm (19 L/min) shall be added to the sprinkler system demand at the point where the systems are connected, to determine the size of common piping and the size of the total water supply requirements where no provision is made to prevent flow into the domestic water system upon operation of a sprinkler.*

Revise Section 8.3.4 to read as follows:
8.3.4* Sprinklers shall not be required in *detached* garages, open attached porches, carports *with no habitable space above*, and similar structures.

Add *new* Section ~~8.4.4~~*8.3.10 and 8.3.10.1* as follows:

8.3.10 Solar photovoltaic panel structures

~~*8.4.4*~~*8.3.10.1 Sprinklers shall be permitted to be omitted ~~for~~ from the following structures:*
(1) Solar photovoltaic panel structures with no use underneath. Signs may be provided, as determined by the enforcing agency prohibiting any use underneath including storage.

(2) Solar photovoltaic (PV) panels supported by framing that have sufficient uniformly distributed and unobstructed openings

throughout the top of the array (horizontal plane) to allow heat and gases to escape, as determined by the enforcing agency.

13R—~~13~~16 *See CCR, Title 24 Part 2 California Building Code, Chapter 35 or CCR, Title 24, Part 9 California Fire Code, Chapter ~~47~~80 for amendments to NFPA 13R.*

NFPA 13R, Amended Sections as follows:

Add new Sections ~~6.6.9~~6.6.10 and 6.10.1 as follows:

6.6.10 Solar photovoltaic panel structures

~~6.6.9~~6.6.10.1 Sprinklers shall be permitted to be omitted ~~for~~ from the following structures:
(1) Solar photovoltaic panel structures with no use underneath. Signs may be provided, as determined by the enforcing agency prohibiting any use underneath including storage.

(2) Solar photovoltaic (PV) panels supported by framing that have sufficient uniformly distributed and unobstructed openings throughout the top of the array (horizontal plane) to allow heat and gases to escape, as determined by the enforcing agency.

72—~~13~~16 National Fire Alarm *and Signaling* Code, *as amended**.....R314.1, R314.2, R314.3.4, R325.5.2.1, R235.5.2.4,

NFPA 72, Amended Sections as follows:

Revise Section 10.3.1 as follows:
10.3.1 Equipment constructed and installed in conformity with this Code shall be listed for the purpose for which it is used. *Fire alarm Systems and components shall be California State Fire Marshal approved and listed in accordance with California Code of Regulations, Title 19, Division 1.*

Revise Section 10.3.3 as follows:
10.3.3 All devices and appliances that receive their power from the initiating device circuit or signaling line circuit of a control unit shall be *California State Fire Marshal* listed for use with the control unit.

Revise Section 10.7.1 as follows:
10.7.1 *Where approved by the authority having jurisdiction*, ECS priority signals when evaluated by stakeholders through risk analysis in accordance with 24.3.11 shall be permitted to take precedence over all other signals.

Revise Section 12.3.8.1 as follows:
12.3.8.1 The outgoing and return (redundant) circuit conductors shall be permitted in the same cable assembly (i.e., multiconductor cable), enclosure, or raceway only under the following conditions:
(1) For a distance not to exceed 10 ft (3.0 m) where the outgoing and return conductors enter or exit the initiating device, notification appliance, or control unit enclosures
(2) Single drops installed in the raceway to individual devices or appliances
(3)*In a single room not exceeding 1000 ft2 (93 m2) in area, a drop installed in the raceway to multiple devices or appliances that does not include any emergency control function devices
~~12.3.7~~—(4) Where the vertically run conductors are contained in a 2-hour rated cable assembly, or enclosed (installed) in a 2-hour rated enclosure or a listed circuit integrity (C.I.) cable, which meets or exceeds a 2-hour fire resistive rating.

Revise Section 14.4.6.1 as follows:
14.4.6.1 Testing. Household fire alarm systems shall be tested in *accordance with the manufacturer's published instructions* according to the methods of Table 14.4.3.2.

Revise Section 17.15 as follows:
17.15 Fire Extinguisher Electronic Monitoring Device. A fire extinguisher electronic monitoring device shall indicate those conditions for a specific fire extinguisher required by *California Code of Regulations, Title 19, Division 1, Chapter 1, Section 574.2 (c) and California Fire Code to a fire alarm control unit.*

Revise Section 21.3.6 as follows:
21.3.6 Smoke detectors shall not be installed in unsprinklered elevator hoistways unless they are installed to activate the elevator hoistway smoke relief equipment *or where required by Chapter 30 of the California Building Code.*

Revise Section 23.8.5.1.2 as follows:
23.8.5.1.2 - Where connected to a supervising station, fire alarm systems employing automatic fire detectors or waterflow detection devices shall include a manual fire alarm box to initiate a signal to the supervising station.

Exception: Fire alarm systems dedicated to elevator recall control, supervisory service *and fire sprinkler monitoring as permitted in section 21.3 of NFPA 72.*

Revise Section 23.8.5.4.1 as follows:
23.8.5.4.1 Systems equipped with alarm verification features shall be permitted under the following conditions:
(1) The alarm verification feature is not initially enabled unless conditions or occupant activities that are expected to cause nuisance alarms are anticipated in the area that is protected by the smoke detectors. Enabling of the alarm verification feature shall be protected by password or limited access.
(2) A smoke detector that is continuously subjected to a smoke concentration above alarm threshold does not delay the system functions of Sections 10.7 through 10.16, 23.8.1.1, or 21.2.1 by more than . *30 seconds.*
(3) Actuation of an alarm-initiating device other than a smoke detector causes the system functions of sections 10.7 through 10.16, 23.8.1.1, or 21.2.1 without additional delay.
(4) The current status of the alarm verification feature is shown on the record of completion *(see Figure 7.8.2(a), item 4.3).*
(5) Operation of a patient room smoke detector in I-2 and R-2.1 Occupancies shall not include an alarm verification feature.

Revise Section 29.3.1 as follows:
29.3.1 All devices, combinations of devices, and equipment to be installed in conformity with this chapter shall be approved ~~or~~*and* listed *by the California State Fire Marshal* the for the purposes for which they are intended.

Revise Section 29.5.2.1.1 as follows:
29.5.2.1.1* Smoke and Heat Alarms. Unless exempted by applicable laws, codes, or standards, smoke or heat alarms used to provide a fire-warning function, and when two or more alarms are installed within a dwelling unit, suite of rooms, or similar area, shall be arranged so that the operation of any smoke or heat alarm causes all alarms within these locations to sound.

Exception to 29.5.2.1.1 not adopted by the SFM

Add Section 29.7.2.1 as follows:
29.7.2.1 *The alarm verification feature shall not be used for household fire warning equipment.*

Add Section 29.7.6.7.1 as follows:
29.7.6.7.1 *The alarm verification feature shall not be used for household fire warning equipment.*

Revise Section 23.8.5.4 as follows:
29.8.3.4 Specific location requirements. *The installation of smoke alarms and smoke detectors shall comply with the following requirements:*
(1) Smoke alarms and smoke detectors shall not be located where ambient conditions, including humidity and temperature, are outside the limits specified by the manufacturer's published instructions.
(2) Smoke alarms and smoke detectors shall not be located within unfinished attics or garages or in other spaces where temperatures can fall below 40°F (4°C) or exceed 100°F (38°C).
(3) Where the mounting surface could become considerably warmer or cooler than the room, such as a poorly insulated ceiling below an unfinished attic or an exterior wall, smoke alarms and smoke detectors shall be mounted on an inside wall.
(4) Smoke alarms or smoke detectors shall be installed a minimum of 20 feet horizontal distance from a permanently installed cooking appliance.

Exceptions: *Ionization smoke alarms with an alarm silencing switch or photoelectric smoke alarms shall be permitted to be installed 10 feet (3 m) or greater from a permanently installed cooking appliance.*
Photoelectric smoke alarms shall be permitted to be installed greater than 6 feet (1.8 m) from a permanently installed cooking appliance where the kitchen or cooking area and adjacent spaces have no clear interior partitions and the 10 ft distances would prohibit the placement of a smoke alarm or smoke detector required by other sections of the code.
Smoke alarms listed for use in close proximity to a permanently installed cooking appliance.
(5) Effective January 1, 2016, smoke alarms and smoke detectors used in household fire alarm systems installed between 6 ft (1.8 m) and 20 ft (6.1 m) along a horizontal flow path from a stationary or fixed cooking appliance shall be listed for resistance to common nuisance sources from cooking.

(6) Installation near bathrooms. Smoke alarms shall be installed not less than a 3-foot (0.91 m) horizontal distance from the door or opening of a bathroom that contains a bathtub or shower unless this would prevent placement of a smoke alarm required by other sections of the code.
(7) Smoke alarms and smoke detectors shall not be installed within a 36 in. (910 mm) horizontal path from the supply registers of a forced air heating or cooling system and shall be installed outside of the direct airflow from those registers.
(8) Smoke alarms and smoke detectors shall not be installed within a 36 in. (910 mm) horizontal path from the tip of the blade of a ceiling-suspended (paddle) fan.
(9) Where stairs lead to other occupied levels, a smoke alarm or smoke detector shall be located so that smoke rising in the stairway cannot be prevented from reaching the smoke alarm or smoke detector by an intervening door or obstruction.
(10) For stairways leading up from a basement, smoke alarms or smoke detectors shall be located on the basement ceiling near the entry to the stairs.
(11) For tray-shaped ceilings (coffered ceilings), smoke alarms and smoke detectors shall be installed on the highest portion of the ceiling or on the sloped portion of the ceiling within 12 in. (300 mm) vertically down from the highest point.
(12) Smoke alarms and detectors installed in rooms with joists or beams shall comply with the requirements of 17.7.3.2.4 of NFPA 72.
(13) Heat alarms and detectors installed in rooms with joists or beams shall comply with the requirements of 17.6.3 of NFPA 72.

211—13~~13~~	Chimneys, Fireplaces, Vents and Solid Fuel-burning Appliances
252—03	*Standard Methods of Fire Tests of Door Assemblies.....R327.6.3.2.3*
257—13	*Standard for Fire Test for Window and Glass Block Assemblies.....R327.6.3.2.2*
259—13 ~~13~~	Test Method for Potential Heat of Building Materials
275—13 ~~13~~	Standard Method of Fire Tests for the Evaluation of Thermal Barriers Used Over Foam Plastic Insulation
501—*13*	Standard on Manufactured Housing
720—15 ~~12~~	Standard for the Installation of Carbon Monoxide (CO) Detection and Warning Equipment

SFM

State of California
Department of Forestry and Fire Protection
Office of the State Fire Marshal
P.O. Box 944246
Sacramento, CA 944246-2460

Standard reference number	*Title*	*Referenced in code section number*
SFM 12-3	*Releasing Systems for Security Bars in Dwellings*	*R310*
SFM 12-7A-1	*Exterior Wall Siding and Sheathing*	*R327.5.3, R327.6.3.1, R327.6.3.2.3*
SFM 12-7A-2	*Exterior Window*	*R327.5.3, R327.6.3.2.2*
SFM 12-7A-3	*Under Eave*	*R327.5.3, R327.6.2.3*
SFM 12-7A-4	*Decking*	*R327.5.3, R327.6.4.1.1*
SFM 12-7A-4A	*Decking Alternate Method A*	*R327..3.7, R327..9.3.4*
SFM 12-7A-5	*Ignition Resistant Building Material*	*R327.2, R327.3.7, R327.4.2, R327.6.3.2, R327.9.3.1*

(The Office of the State Fire Marshal standards referred to above are found in the California Code of Regulations, Title 24, Part 12.)

UBC

International Code Council, Inc.
500 New Jersey Avenue, NW 6th Floor
Washington, DC 20001

Standard reference number	Title	Referenced in code section number
UBC Standard 15-2	*Test Standard for determining the Fire Retardancy of Roof-covering Materials*	*R902*
UBC Standard 15-3	*Wood Shakes*	*R902*

APPENDIX M

See Health and Safety Code Sections 1597.45, 1597.46, 1597.54 and 13143 regarding small family day-care homes and large family day-care homes. Provisions for day-care facilities shall be in accordance with Section 1.1.3.1 for classification, R326 for large family day-care, R325 for Group R-3.1 or the California Building Code. This appendix is not applicable in California.

~~HOME DAY CARE—R-3 OCCUPANCY~~
~~SECTION AM101~~
~~GENERAL~~

~~**M101.1 General.** This appendix shall apply to a home day care operated within a dwelling. It is to include buildings and structures occupied by persons of any age who receive custodial care for less than 24 hours by individuals other than parents or guardians or relatives by blood, marriage, or adoption, and in a place other than the home of the person cared for.~~

~~SECTION AM102~~
~~DEFINITIONS~~

~~**EXIT ACCESS.** That portion of a means of egress system that leads from any occupied point in a building or structure to an exit.~~

~~SECTION AM103~~
~~MEANS OF EGRESS~~

~~**AM103.1 Exits required.** If the occupant load of the residence is more than nine, including those who are residents, during the time of operation of the day care, two exits are required from the ground level story. Two exits are required from a home day care operated in a manufactured home regardless of the occupant load. Exits shall comply with Section R311.~~

~~**AM103.1.1 Exit access prohibited.** An exit access from the area of day care operation shall not pass through bathrooms, bedrooms, closets, garages, fenced rear yards or similar areas.~~

~~**Exception:** An exit may discharge into a fenced yard if the gate or gates remain unlocked during day care hours. The gates may be locked if there is an area of refuge located within the fenced yard and more than 50 feet (15 240 mm) from the dwelling. The area of refuge shall be large enough to allow 5 square feet (0.5 m2) per occupant.~~

~~**AM103.1.2 Basements.** If the basement of a dwelling is to be used in the day care operation, two exits are required from the basement regardless of the occupant load. One of the exits may pass through the dwelling and the other must lead directly to the exterior of the dwelling.~~

~~**Exception:** An emergency and escape window complying with Section R310 and which does not conflict with Section AM103.1.1 may be used as the second means of egress from a basement.~~

~~**AM103.1.3 Yards.** If the yard is to be used as part of the day care operation it shall be fenced.~~

~~**AM103.1.3.1 Type of fence and hardware.** The fence shall be of durable materials and be at least 6 feet (1529 mm) tall completely enclosing the area used for the day care operations. Each opening shall be a gate or door equipped with a self closing and self latching device to be installed at a minimum of 5 feet (1528 mm) above the ground.~~

~~**Exception:** The door of any dwelling which forms part of the enclosure need not be equipped with self closing and self latching devices.~~

~~**AM103.1.3.2 Construction of fence.** Openings in the fence, wall or enclosure required by this section shall have intermediate rails or an ornamental pattern that do not allow a sphere 4 inches (102 mm) in diameter to pass through. In addition, the following criteria must be met:~~

~~1. The maximum vertical clearance between grade and the bottom of the fence, wall or enclosure shall be 2 inches (51 mm).~~

~~2. Solid walls or enclosures that do not have openings, such as masonry or stone walls, shall not contain indentations or protrusions except for tooled masonry joints.~~

~~3. Maximum mesh size for chain link fences shall be 11/4 inches (32 mm) square unless the fence has slats at the top or bottom which reduce the opening to no more than 13/4 inches (44 mm). The wire shall not be less than 9 gage [(0.148 in.) (3.8 mm)].~~

~~**AM103.1.3.3 Decks.** Decks that are more than 12 inches (305 mm) above grade shall have a guard in compliance with Section R312.~~

~~**AM103.2 Width and height of an exit.** The minimum width of a required exit is 36 inches (914 mm) with a net clear width of 32 inches (813 mm). The minimum height of a required exit is 6 feet 8 inches (2032 mm).~~
~~**AM103.3 Type of lock and latches for exits.** Regardless of the occupant load served, exit doors shall be openable from the inside without the use of a key or any special knowledge or effort. When the occupant load is 10 or less, a night latch, dead bolt or security chain may be used, provided such devices are openable from the inside without the use of a key or tool and mounted at a height not to exceed 48 inches (1219 mm) above the finished floor.~~
~~**AM103.4 Landings.** Landings for stairways and doors shall comply with Section R317.4 except that landings shall be required for the exterior side of a sliding door when a home day care is being operated in a Group R-3 Occupancy.~~

~~**SECTION AM104**~~
~~**SMOKE DETECTION**~~

~~**AM104.1 General.** Smoke detectors shall be installed in dwelling units used for home day care operations. Detectors shall be installed in accordance with the approved manufacturer's instructions. If the current smoke detection system in the dwelling is not in compliance with the currently adopted code for smoke detection, it shall be upgraded to meet the currently adopted code requirements and Section AM103 before daycare operations commence.~~
~~**AM104.2 Power source.** Required smoke detectors shall receive their primary power from the building wiring when that wiring is served from a commercial source and shall be equipped with a battery backup. The detector shall emit a signal when the batteries are low. Wiring shall be permanent and without a disconnecting switch other than those required for over current protection. Required smoke detectors shall be interconnected so if one detector is activated, all detectors are activated.~~
~~**AM104.3 Location.** A detector shall be located in each bedroom and any room that is to be used as a sleeping room and centrally located in the corridor, hallway or area giving access to each separate sleeping area. When the dwelling unit has more than one story, and in dwellings with basements, a detector shall be installed on each story and in the basement. In dwelling units where a story or basement is split into two or more levels, the smoke detector shall be installed on the upper level, except that when the lower level contains a sleeping area, a detector shall be installed on each level. When sleeping rooms are on the upper level, the detector shall be placed at the ceiling of the upper level in close proximity to the stairway. In dwelling units where the ceiling height of a room open to the hallway serving the bedrooms or sleeping areas exceeds that of the hallway by 24 inches (610 mm) or more, smoke detectors shall be installed in the hallway and in the adjacent room. Detectors shall sound an alarm audible in all sleeping areas of the dwelling unit in which they are located.~~

Notation:
Authority: Health and Safety Code Sections 1250, 1569.72, 1569.78, 1568.02, 1502, 1597.44, 1597.45, 1597.46, 1597.54, 1597.65, 13108, 13108.5, 13114, 13143, 13143.2, 13143.6, 13146, 17921, 18949.2, Government Code Section 51189
References: Health and Safety Code Sections 13143, 18949.2, Government Code Sections 51176, 51177, 51178, 51179, Public Resources Code Sections 4201 through 4204

2015 IRC®

INTERNATIONAL
Residential Code®

FOR ONE- AND TWO-FAMILY DWELLINGS

CODE ALERT!

Sign up now to receive critical code updates and free access to videos, book excerpts and training resources.

Signup is easy, subscribe now! www.iccsafe.org/alerts

2441

INTERNATIONAL CODE COUNCIL®

2015 International Residential Code®

First Printing: May 2014

ISBN: 978-1-60983-470-8 (soft-cover edition)
ISBN: 978-1-60983-469-2 (loose-leaf edition)

COPYRIGHT © 2014
by
INTERNATIONAL CODE COUNCIL, INC.

Date of First Publication: May 30, 2014

ALL RIGHTS RESERVED. This 2015 *International Residential Code*® is a copyrighted work owned by the International Code Council, Inc. Without advance written permission from the copyright owner, no part of this book may be reproduced, distributed or transmitted in any form or by any means, including, without limitation, electronic, optical or mechanical means (by way of example, and not limitation, photocopying, or recording by or in an information storage retrieval system). For information on permission to copy material exceeding fair use, please contact: Publications, 4051 West Flossmoor Road, Country Club Hills, IL 60478. Phone 1-888-ICC-SAFE (422-7233).

Trademarks: "International Code Council," the "International Code Council" logo and the "International Residential Code" are trademarks of the International Code Council, Inc.

PRINTED IN THE U.S.A.

2442

PREFACE

Introduction

Internationally, code officials recognize the need for a modern, up-to-date residential code addressing the design and construction of one- and two-family dwellings and townhouses. The *International Residential Code®*, in this 2015 edition, is designed to meet these needs through model code regulations that safeguard the public health and safety in all communities, large and small.

This comprehensive, stand-alone residential code establishes minimum regulations for one- and two-family dwellings and townhouses using prescriptive provisions. It is founded on broad-based principles that make possible the use of new materials and new building designs. This 2015 edition is fully compatible with all of the *International Codes®* (I-Codes®) published by the International Code Council® (ICC)®, including the *International Building Code®*, *International Energy Conservation Code®*, *International Existing Building Code®*, *International Fire Code®*, *International Fuel Gas Code®*, *International Green Construction Code®* *International Mechanical Code®*, ICC *Performance Code®*, *International Plumbing Code®*, *International Private Sewage Disposal Code®*, *International Property Maintenance Code®*, *International Swimming Pool and Spa Code™*, *International Wildland-Urban Interface Code®* and *International Zoning Code®*.

The *International Residential Code* provisions provide many benefits, among which is the model code development process that offers an international forum for residential construction professionals to discuss prescriptive code requirements. This forum provides an excellent arena to debate proposed revisions. This model code also encourages international consistency in the application of provisions.

Development

The first edition of the *International Residential Code* (2000) was the culmination of an effort initiated in 1996 by a developement committee appointed by ICC and consisting of representatives from the three statutory members of the International Code Council at the time, including: Building Officials and Code Administrators International, Inc. (BOCA), International Conference of Building Officials (ICBO) and Southern Building Code Congress International (SBCCI), and representatives from the National Association of Home Builders (NAHB). The intent was to draft a stand-alone residential code consistent with and inclusive of the scope of the existing model codes. Technical content of the 1998 *International One- and Two-Family Dwelling Code* and the latest model codes promulgated by BOCA, ICBO, SBCCI and ICC was used as the basis for the development, followed by public hearings in 1998 and 1999 to consider proposed changes. This 2015 edition represents the code as originally issued, with changes reflected in the 2009 through 2012 editions, and further changes developed through the ICC Code Development Process through 2013. Residential electrical provisions are based on the 2014 *National Electrical Code®* (NFPA 70). A new edition such as this is promulgated every three years.

Energy provisions in Chapter 11 are duplicated from the *International Energy Conservation Code®—Residential Provisions* applicable to residential buildings which fall under the scope of this code.

Fuel gas provisions have been included through an agreement with the American Gas Association (AGA). Electrical provisions have been included through an agreement with the National Fire Protection Association (NFPA).

This code is founded on principles intended to establish provisions consistent with the scope of a residential code that adequately protects public health, safety and welfare; provisions that do not unnecessarily increase construction costs; provisions that do not restrict the use of new materials, products or methods of construction; and provisions that do not give preferential treatment to particular types or classes of materials, products or methods of construction.

Adoption

The International Code Council maintains a copyright in all of its codes and standards. Maintaining copyright allows ICC to fund its mission through sales of books, in both print and electronic formats. The *International Residential Code* is designed for adoption and use by jurisdictions that recognize and acknowledge the ICC's copyright in the code, and further acknowledge the substantial shared value of the public/private partnership for code development between jurisdictions and the ICC.

The ICC also recognizes the need for jurisdictions to make laws available to the public. All ICC codes and ICC standards, along with the laws of many jurisdictions, are available for free in a non-downloadable form on the ICC's website. Jurisdictions should contact the ICC at adoptions@icc-safe.org to learn how to adopt and distribute laws based on the *International Residential Code* in a manner that provides necessary access, while maintaining the ICC's copyright.

Maintenance

The *International Residential Code* is kept up-to-date through the review of proposed changes submitted by code enforcing officials, industry representatives, design professionals and other interested parties. Proposed changes are carefully considered through an open code development process in which all interested and affected parties may participate.

The contents of this work are subject to change both through the code development cycles and the governmental body that enacts the code into law. For more information regarding the code development process, contact the Codes and Standards Development Department of the International Code Council.

The maintenance process for the fuel gas provisions is based upon the process used to maintain the *International Fuel Gas Code*, in conjunction with the American Gas Association. The maintenance process for the electrical provisions is undertaken by the National Fire Protection Association.

While the development procedure of the *International Residential Code* ensures the highest degree of care, ICC, the founding members of ICC, its members and those participating in the development of this code do not accept any liability resulting from compliance or noncompliance with the provisions because ICC and its founding members do not have the power or authority to police or enforce compliance with the contents of this code. Only the governmental body that enacts the code into law has such authority.

Code Development Committee Responsibilities

In each code development cycle, proposed changes to the code are considered at the Committee Action Hearings by the applicable International Code Development Committee as follows:

[RB] = IRC—Building Code Development Committee

[RE] = Residential Energy Code Development Committee

[RMP] = IRC—Mechanical/Plumbing Code Development Committee

The [RE] committee is also responsible for the IECC—Residential Provisions.

For the development of the 2018 edition of the I-Codes, there will be three groups of code development committees and they will meet in separate years. Note that these are tentative groups.

Group A Codes (Heard in 2015, Code Change Proposals Deadline: January 12, 2015)	**Group B Codes (Heard in 2016, Code Change Proposals Deadline: January 11, 2016)**	**Group C Codes (Heard in 2017, Code Change Proposals Deadline: January 11, 2017)**
International Building Code – Fire Safety (Chapters 7, 8, 9, 14, 26) – Means of Egress (Chapters 10, 11, Appendix E) – General (Chapters 2-6, 12, 27-33, Appendices A, B, C, D, K)	Administrative Provisions (Chapter 1 all codes except the IRC and IECC, administrative updates to currently referenced standards, and designated definitions)	International Green Construction Code
International Fuel Gas Code	International Building Code – Structural (Chapters 15-25, Appendices F, G, H, I, J, L, M)	
International Existing Building Code	International Energy Conservation Code	
International Mechanical Code	International Fire Code	
International Plumbing Code	**International Residential Code** – IRC-Building (Chapters 1, 3-10, Appendices E, F, H, J, K, L, M, O, R, S, T, U)	
International Private Sewage Disposal Code	International Wildland-Urban Interface Code	
International Property Maintenance Code		
International Residential Code – IRC-Mechanical (Chapters 12-24) – IRC-Plumbing (Chapters 25-33, Appendices G, I, N, P)		
International Swimming Pool and Spa Code		
International Zoning Code		

Note: Proposed changes to the ICC *Performance Code* will be heard by the code development committee noted in brackets [ ] in the text of the code.

Code change proposals submitted to Chapters 1 and 3 through 10, Appendices E, F, H, J, K, L, M, O, R, S, T, U and Definitions designated [RB] of the *International Residential Code* are heard by the IRC—Building Committee during the Group B (2016) cycle code development hearing. Proposed changes to all other chapters are heard by the IRC Plumbing and Mechanical Committee during the Group A (2015) code development cycle.

It is very important that anyone submitting code change proposals understand which code development committee is responsible for the section of the code that is the subject of the code change proposal. For further information on the code development committee responsibilities, please visit the ICC web site at www.iccsafe.org/scoping.

Marginal Markings

Solid vertical lines in the margins within the body of the code indicate a technical change from the requirements of the 2012 edition. Deletion indicators in the form of an arrow (➡) are provided in the margin where an entire section, paragraph, exception or table has been deleted or an item in a list of items or a table has been deleted.

A single asterisk [*] placed in the margin indicates that text or a table has been relocated within the code. A double asterisk [**] placed in the margin indicates that the text or table immediately following it has been relocated there from elsewhere in the code. The following table indicates such relocations in the 2015 edition of the *International Residential Code.*

2015 LOCATION	2012 LOCATION
R302.13	R501.3
R403.1.3.4	R403.1.4.2
R404.1.1	R404.1.3
R502.2.2	R502.1.2
Tables R602.7(1) and (2)	Tables R502.5(1) and (2)
P2902.3.7	P2905.4.1

Italicized Terms

Selected terms set forth in Chapter 2, Definitions, are italicized where they appear in code text. Such terms are not italicized where the definition set forth in Chapter 2 does not impart the intended meaning in the use of the term. The terms selected have definitions that the user should read carefully to better understand the code.

EFFECTIVE USE OF THE INTERNATIONAL RESIDENTIAL CODE

Effective Use of the International Residential Code

The *International Residential Code*® (IRC®) was created to serve as a complete, comprehensive code regulating the construction of single-family houses, two-family houses (duplexes) and buildings consisting of three or more townhouse units. All buildings within the scope of the IRC are limited to three stories above grade plane. For example, a four-story single-family house would fall within the scope of the *International Building Code*® (IBC®), not the IRC. The benefits of devoting a separate code to residential construction include the fact that the user need not navigate through a multitude of code provisions that do not apply to residential construction in order to locate that which is applicable. A separate code also allows for residential and nonresidential code provisions to be distinct and tailored to the structures that fall within the appropriate code's scopes.

The IRC contains coverage for all components of a house or townhouse, including structural components, fireplaces and chimneys, thermal insulation, mechanical systems, fuel gas systems, plumbing systems and electrical systems.

The IRC is a prescriptive-oriented (specification) code with some examples of performance code language. It has been said that the IRC is the complete cookbook for residential construction. Section R301.1, for example, is written in performance language, but states that the prescriptive requirements of the code will achieve such performance.

It is important to understand that the IRC contains coverage for what is conventional and common in residential construction practice. While the IRC will provide all of the needed coverage for most residential construction, it might not address construction practices and systems that are atypical or rarely encountered in the industry. Sections such as R301.1.3, R301.2.2.1.1, R320.1, M1301.1, G2401.1 and P2601.1 refer to other codes either as an alternative to the provisions of the IRC or where the IRC lacks coverage for a particular type of structure, design, system, appliance or method of construction. In other words, the IRC is meant to be all inclusive for typical residential construction and it relies on other codes only where alternatives are desired or where the code lacks coverage for the uncommon aspect of residential construction. Of course, the IRC constantly evolves to address new technologies and construction practices that were once uncommon, but now common.

The IRC is unique in that much of it, including Chapters 3 through 9 and Chapters 34 through 43, is presented in an ordered format that is consistent with the normal progression of construction, starting with the design phase and continuing through the final trim-out phase. This is consistent with the "cookbook" philosophy of the IRC.

The IRC is divided into eight main parts, specifically, Part I—Administration, Part II—Definitions, Part III—Building Planning and Construction, Part IV—Energy Conservation, Part V—Mechanical, Part VI—Fuel Gas, Part VII—Plumbing and Part VIII—Electrical.

The following provides a brief description of the content of each chapter and appendix of the IRC:

Chapter 1 Scope and Administration. This chapter contains provisions for the application, enforcement and administration of subsequent requirements of the code. In addition to establishing the scope of the code, Chapter 1 identifies which buildings and structures come under its purview. Chapter 1 is largely concerned with maintaining "due process of law" in enforcing the building criteria contained in the body of the code. Only through careful observation of the administrative provisions can the building official reasonably expect to demonstrate that "equal protection under the law" has been provided.

Chapter 2 Definitions. Terms defined in the code are listed alphabetically in Chapter 2. It is important to note that two chapters have their own definitions sections: Chapter 24 for the defined terms that are unique to fuel gas and Chapter 35 containing terms that are applicable to electrical Chapters 34 through 43. In the case where Chapter 2 and another chapter both define the same term differently, the definition found in Chapter 24 and/or 35 is intended to prevail where the term

is used in Chapter 24 and/or 35 and the definition contained in Chapter 2 is intended to prevail where the term is used in all other locations in the code. Except where Chapter 24 or 35 has a definition that will prevail therein, the definitions in Chapter 2 are applicable throughout the code.

Where understanding a term's definition is key to or necessary for understanding a particular code provision, the term is shown in italics where it appears in the code. This is true only for those terms that have a meaning that is unique to the code. In other words, the generally understood meaning of a term or phrase might not be sufficient or consistent with the meaning prescribed by the code; therefore, it is essential that the code-defined meaning be known.

Guidance regarding not only tense, gender and plurality of defined terms, but also terms not defined in this code, is provided.

Chapter 3 Building Planning. Chapter 3 provides guidelines for a minimum level of structural integrity, life safety, fire safety and livability for inhabitants of dwelling units regulated by this code. Chapter 3 is a compilation of the code requirements specific to the building planning sector of the design and construction process. This chapter sets forth code requirements dealing with light, ventilation, sanitation, minimum room size, ceiling height and environmental comfort. Chapter 3 establishes life-safety provisions including limitations on glazing used in hazardous areas, specifications on stairways, use of guards at elevated surfaces, window and fall protection, and rules for means of egress. Snow, wind and seismic design live and dead loads and flood-resistant construction, as well as solar energy systems, and swimming pools, spas and hot tubs, are addressed in this chapter.

Chapter 4 Foundations. Chapter 4 provides the requirements for the design and construction of foundation systems for buildings regulated by this code. Provisions for seismic load, flood load and frost protection are contained in this chapter. A foundation system consists of two interdependent components: the foundation structure itself and the supporting soil.

The prescriptive provisions of this chapter provide requirements for constructing footings and walls for foundations of wood, masonry, concrete and precast concrete. In addition to a foundation's ability to support the required design loads, this chapter addresses several other factors that can affect foundation performance. These include controlling surface water and subsurface drainage, requiring soil tests where conditions warrant and evaluating proximity to slopes and minimum depth requirements. The chapter also provides requirements to minimize adverse effects of moisture, decay and pests in basements and crawl spaces.

Chapter 5 Floors. Chapter 5 provides the requirements for the design and construction of floor systems that will be capable of supporting minimum required design loads. This chapter covers four different types: wood floor framing, wood floors on the ground, cold-formed steel floor framing and concrete slabs on the ground. Allowable span tables are provided that greatly simplify the determination of joist, girder and sheathing sizes for raised floor systems of wood framing and cold-formed steel framing. This chapter also contains prescriptive requirements for wood-framed exterior decks and their attachment to the main building.

Chapter 6 Wall Construction. Chapter 6 contains provisions that regulate the design and construction of walls. The wall construction covered in Chapter 6 consists of five different types: wood framed, cold-formed steel framed, masonry, concrete and structural insulated panel (SIP). The primary concern of this chapter is the structural integrity of wall construction and transfer of all imposed loads to the supporting structure. This chapter provides the requirements for the design and construction of wall systems that are capable of supporting the minimum design vertical loads (dead, live and snow loads) and lateral loads (wind or seismic loads). This chapter contains the prescriptive requirements for wall bracing and/or shear walls to resist the imposed lateral loads due to wind and seismic.

Chapter 6 also regulates exterior windows and doors installed in walls. The chapter contains criteria for the performance of exterior windows and doors and includes provisions for testing and labeling, garage doors, wind-borne debris protection and anchorage details.

Chapter 7 Wall Covering. Chapter 7 contains provisions for the design and construction of interior and exterior wall coverings. This chapter establishes the various types of materials, materials standards and methods of application permitted for use as interior coverings, including interior plaster, gypsum board, ceramic tile, wood veneer paneling, hardboard paneling, wood shakes and wood shingles. Chapter 7 also contains requirements for the use of vapor retarders for moisture control in walls.

Exterior wall coverings provide the weather-resistant exterior envelope that protects the building's interior from the elements. Chapter 7 provides the requirements for wind resistance and water-resistive barrier for exterior wall coverings. This chapter prescribes the exterior wall coverings as well as the water-resistive barrier required beneath the exterior materials. Exterior wall coverings regulated by this section include aluminum, stone and masonry veneer, wood, hardboard, particleboard, wood structural panel siding, wood shakes and shingles, exterior plaster, steel, vinyl, fiber cement and exterior insulation finish systems.

Chapter 8 Roof-ceiling Construction. Chapter 8 regulates the design and construction of roof-ceiling systems. This chapter contains two roof-ceiling framing systems: wood framing and cold-formed steel framing. Allowable span tables are provided to simplify the selection of rafter and ceiling joist size for wood roof framing and cold-formed steel framing. Chapter 8 also provides requirements for the application of ceiling finishes, the proper ventilation of concealed spaces in roofs (e.g., enclosed attics and rafter spaces), unvented attic assemblies and attic access.

Chapter 9 Roof Assemblies. Chapter 9 regulates the design and construction of roof assemblies. A roof assembly includes the roof deck, vapor retarder, substrate or thermal barrier, insulation, vapor retarder and roof covering. This chapter provides the requirement for wind resistance of roof coverings.

The types of roof covering materials and installation regulated by Chapter 9 are: asphalt shingles, clay and concrete tile, metal roof shingles, mineral-surfaced roll roofing, slate and slate-type shingles, wood shakes and shingles, built-up roofs, metal roof panels, modified bitumen roofing, thermoset and thermoplastic single-ply roofing, sprayed polyurethane foam roofing, liquid applied coatings and photovoltaic shingles. Chapter 9 also provides requirements for roof drainage, flashing, above deck thermal insulation, rooftop-mounted photovoltaic systems and recovering or replacing an existing roof covering.

Chapter 10 Chimneys and Fireplaces. Chapter 10 contains requirements for the safe construction of masonry chimneys and fireplaces and establishes the standards for the use and installation of factory-built chimneys, fireplaces and masonry heaters. Chimneys and fireplaces constructed of masonry rely on prescriptive requirements for the details of their construction; the factory-built type relies on the listing and labeling method of approval. Chapter 10 provides the requirements for seismic reinforcing and anchorage of masonry fireplaces and chimneys.

Chapter 11 [RE] Energy Efficiency. The purpose of Chapter 11 [RE] is to provide minimum design requirements that will promote efficient utilization of energy in buildings. The requirements are directed toward the design of building envelopes with adequate thermal resistance and low air leakage, and toward the design and selection of mechanical, water heating, electrical and illumination systems that promote effective use of depletable energy resources. The provisions of Chapter 11 [RE] are duplicated from the *International Energy Conservation Code—Residential Provisions*, as applicable for buildings which fall under the scope of the IRC.

For ease of use and coordination of provisions, the corresponding IECC—Residential Provisions section number is indicated following the IRC section number [e.g. N1102.1 (R402.1)].

Chapter 12 Mechanical Administration. Chapter 12 establishes the limits of applicability of the code and describes how the code is to be applied and enforced. A mechanical code, like any other code, is intended to be adopted as a legally enforceable document and it cannot be effective without adequate provisions for its administration and enforcement. The provisions of Chapter 12 establish the authority and duties of the code official appointed by the jurisdiction having authority and also establish the rights and privileges of the design professional, contractor and property owner. It also relates this chapter to the administrative provisions in Chapter 1.

Chapter 13 General Mechanical System Requirements. Chapter 13 contains broadly applicable requirements related to appliance listing and labeling, appliance location and installation, appliance and systems access, protection of structural elements and clearances to combustibles, among others.

Chapter 14 Heating and Cooling Equipment and Appliances. Chapter 14 is a collection of requirements for various heating and cooling appliances, dedicated to single topics by section. The common theme is that all of these types of appliances use energy in one form or another, and the improper installation of such appliances would present a hazard to the occupants of the dwellings, due to either the potential for fire or the accidental release of refrigerants. Both situations are undesirable in dwellings that are covered by this code.

Chapter 15 Exhaust Systems. Chapter 15 is a compilation of code requirements related to residential exhaust systems, including kitchens and bathrooms, clothes dryers and range hoods. The code regulates the materials used for constructing and installing such duct systems. Air brought into the building for ventilation, combustion or makeup purposes is protected from contamination by the provisions found in this chapter.

Chapter 16 Duct Systems. Chapter 16 provides requirements for the installation of ducts for supply, return and exhaust air systems. This chapter contains no information on the design of these systems from the standpoint of air movement, but is concerned with the structural integrity of the systems and the overall impact of the systems on the fire-safety performance of the building. This chapter regulates the materials and methods of construction which affect the performance of the entire air distribution system.

Chapter 17 Combustion Air. Complete combustion of solid and liquid fuel is essential for the proper operation of appliances, control of harmful emissions and achieving maximum fuel efficiency. If insufficient quantities of oxygen are supplied, the combustion process will be incomplete, creating dangerous byproducts and wasting energy in the form of unburned fuel (hydrocarbons). The byproducts of incomplete combustion are poisonous, corrosive and combustible, and can cause serious appliance or equipment malfunctions that pose fire or explosion hazards.

The combustion air provisions in this code from previous editions have been deleted from Chapter 17 in favor of a single section that directs the user to NFPA 31 for oil-fired appliance combustion air requirements and the manufacturer's installation instructions for solid fuel-burning appliances. If fuel gas appliances are used, the provisions of Chapter 24 must be followed.

Chapter 18 Chimneys and Vents. Chapter 18 regulates the design, construction, installation, maintenance, repair and approval of chimneys, vents and their connections to fuel-burning appliances. A properly designed chimney or vent system is needed to conduct the flue gases produced by a fuel-burning appliance to the outdoors. The provisions of this chapter are intended to minimize the hazards associated with high temperatures and potentially toxic and corrosive combustion gases. This chapter addresses factory-built and masonry chimneys, vents and venting systems used to vent oil-fired and solid fuel-burning appliances.

Chapter 19 Special Appliances, Equipment and Systems. Chapter 19 regulates the installation of fuel-burning appliances that are not covered in other chapters, such as ranges and ovens, sauna heaters, fuel cell power plants and hydrogen systems. Because the subjects in this chapter do not contain the volume of text necessary to warrant individual chapters, they have been combined into a single chapter. The only commonality is that the subjects use energy to perform some task or function. The intent is to provide a reasonable level of protection for the occupants of the dwelling.

Chapter 20 Boilers and Water Heaters. Chapter 20 regulates the installation of boilers and water heaters. Its purpose is to protect the occupants of the dwelling from the potential hazards associated with such appliances. A water heater is any appliance that heats potable water and supplies it to the plumbing hot water distribution system. A boiler either heats water or generates steam for space heating and is generally a closed system.

Chapter 21 Hydronic Piping. Hydronic piping includes piping, fittings and valves used in building space conditioning systems. Applications include hot water, chilled water, steam, steam condensate, brines and water/antifreeze mixtures. Chapter 21 regulates installation, alteration and repair of all hydronic piping systems to insure the reliability, serviceability, energy efficiency and safety of such systems.

Chapter 22 Special Piping and Storage Systems. Chapter 22 regulates the design and installation of fuel oil storage and piping systems. The regulations include reference to construction standards for above-ground and underground storage tanks, material standards for piping systems (both above-ground and underground) and extensive requirements for the proper assembly of system piping and components. The purpose of this chapter is to prevent fires, leaks and spills involving fuel oil storage and piping systems, whether inside or outside structures and above or underground.

Chapter 23 Solar Thermal Energy Systems. Chapter 23 contains requirements for the construction, alteration and repair of all systems and components of solar thermal energy systems used for space heating or cooling, and domestic hot water heating or processing. The provisions of this chapter are limited to those necessary to achieve installations that are relatively hazard free.

A solar thermal energy system can be designed to handle 100 percent of the energy load of a building, although this is rarely accomplished. Because solar energy is a low-intensity energy source and dependent on the weather, it is usually necessary to supplement a solar thermal energy system with traditional energy sources.

As our world strives to find alternate means of producing power for the future, the requirements of this chapter will become more and more important over time.

Chapter 24 Fuel Gas. Chapter 24 regulates the design and installation of fuel gas distribution piping and systems, appliances, appliance venting systems and combustion air provisions. The definition of "Fuel gas" includes natural, liquefied petroleum and manufactured gases and mixtures of these gases.

The purpose of this chapter is to establish the minimum acceptable level of safety and to protect life and property from the potential dangers associated with the storage, distribution and use of fuel gases and the byproducts of combustion of such fuels. This code also protects the personnel who install, maintain, service and replace the systems and appliances addressed herein.

Chapter 24 is composed entirely of text extracted from the IFGC; therefore, whether using the IFGC or the IRC, the fuel gas provisions will be identical. Note that to avoid the potential for confusion and conflicting definitions, Chapter 24 has its own definition section.

Chapter 25 Plumbing Administration. The requirements of Chapter 25 do not supersede the administrative provisions of Chapter 1. Rather, the administrative guidelines of Chapter 25 pertain to plumbing installations that are best referenced and located within the plumbing chapters. This chapter addresses how to apply the plumbing provisions of this code to specific types or phases of construction. This chapter also outlines the responsibilities of the applicant, installer and inspector with regard to testing plumbing installations.

Chapter 26 General Plumbing Requirements. The content of Chapter 26 is often referred to as "miscellaneous," rather than general plumbing requirements. This is the only chapter of the plumbing chapters of the code whose requirements do not interrelate. If a requirement cannot be located in another plumbing chapter, it should be located in this chapter. Chapter 26 contains safety requirements for the installation of plumbing systems and includes requirements for the identification of pipe, pipe fittings, traps, fixtures, materials and devices used in plumbing systems. If specific provisions do not demand that a requirement be located in another chapter, the requirement is located in this chapter.

Chapter 27 Plumbing Fixtures. Chapter 27 requires fixtures to be of the proper type, approved for the purpose intended and installed properly to promote usability and safe, sanitary conditions. This chapter regulates the quality of fixtures and faucets by requiring those items to comply with nationally recognized standards. Because fixtures must be properly installed so that they are usable by the occupants of the building, this chapter contains the requirements for the installation of fixtures.

Chapter 28 Water Heaters. Chapter 28 regulates the design, approval and installation of water heaters and related safety devices. The intent is to minimize the hazards associated with the installation and operation of water heaters. Although this chapter does not regulate the size of a water heater, it does regulate all other aspects of the water heater installation such as temperature and pressure relief valves, safety drip pans and connections. Where a water heater also supplies water for space heating, this chapter regulates the maximum water temperature supplied to the water distribution system.

Chapter 29 Water Supply and Distribution. This chapter regulates the supply of potable water from both public and individual sources to every fixture and outlet so that it remains potable and uncontaminated by cross connections. Chapter 29 also regulates the design of the water distribution system, which will allow fixtures to function properly. Because it is critical that the potable water supply system remain free of actual or potential sanitary hazards, this chapter has the requirements for providing backflow protection devices.

Chapter 30 Sanitary Drainage. The purpose of Chapter 30 is to regulate the materials, design and installation of sanitary drainage piping systems as well as the connections made to the system. The intent is to design and install sanitary drainage systems that will function reliably, are neither undersized nor oversized and are constructed from materials, fittings and connections whose quality is regulated by this section. This chapter addresses the proper use of fittings for directing the flow into and within the sanitary drain piping system. Materials and provisions necessary for servicing the drainage system are also included in this chapter.

Chapter 31 Vents. Venting protects the trap seal of each trap. The vents are designed to limit differential pressures at each trap to 1 inch of water column (249 Pa). Because waste flow in the drainage system creates pressure fluctuations that can negatively affect traps, the sanitary drainage system must have a properly designed venting system. Chapter 31 covers the requirements for vents and venting. All of the provisions set forth in this chapter are intended to limit the pressure differentials in the drainage system to a maximum of 1 inch of water column (249 Pa) above or below atmospheric pressure (i.e., positive or negative pressures).

Chapter 32 Traps. Traps prevent sewer gas from escaping from the drainage piping into the building. Water seal traps are the simplest and most reliable means of preventing sewer gas from entering the interior environment. This chapter lists prohibited trap types as well as specifies the minimum trap size for each type of fixture.

Chapter 33 Storm Drainage. Rainwater infiltration into the ground adjacent to a building can cause the interior of foundation walls to become wet. The installation of a subsoil drainage system prevents the build-up of rainwater on the exterior of the foundation walls. This chapter provides the specifications for subsoil drain piping. Where the discharge of the subsoil drain system is to a sump, this chapter also provides coverage for sump construction, pumps and discharge piping.

Chapter 34 General Requirements. This chapter contains broadly applicable, general and miscellaneous requirements including scope, listing and labeling, equipment locations and clearances for conductor materials and connections and conductor identification.

Chapter 35 Electrical Definitions. Chapter 35 is the repository of the definitions of terms used in the body of Part VIII of the code. To avoid the potential for confusion and conflicting definitions, Part VIII, Electrical, has its own definition chapter.

Codes are technical documents and every word, term and punctuation mark can impact the meaning of the code text and the intended results. The code often uses terms that have a unique meaning in the code, which can differ substantially from the ordinarily understood meaning of the term as used outside of the code.

The terms defined in Chapter 35 are deemed to be of prime importance in establishing the meaning and intent of the electrical code text that uses the terms. The user of the code should be familiar with and consult this chapter because the definitions are essential to the correct interpretation of the code and because the user may not be aware that a term is defined.

Chapter 36 Services. This chapter covers the design, sizing and installation of the building's electrical service equipment and grounding electrode system. It includes an easy-to-use load calculation method and service conductor sizing table. The electrical service is generally the first part of the electrical system to be designed and installed.

Chapter 37 Branch Circuit and Feeder Requirements. Chapter 37 addresses the requirements for designing the power distribution system which consists of feeders and branch circuits emanating from the service equipment. This chapter dictates the ratings of circuits and the allowable loads, the number and types of branch circuits required, the wire sizing for such branch circuits and feeders and the requirements for protection from overcurrent for conductors. A load calculation method specific to feeders is also included. This chapter is used to design the electrical system on the load side of the service.

Chapter 38 Wiring Methods. Chapter 38 specifies the allowable wiring methods, such as cable, conduit and raceway systems, and provides the installation requirements for the wiring methods. This chapter is primarily applicable to the "rough-in" phase of construction.

Chapter 39 Power and Lighting Distribution. This chapter mostly contains installation requirements for the wiring that serves the lighting outlets, receptacle outlets, appliances and switches located throughout the building. The required distribution and spacing of receptacle outlets and lighting outlets is prescribed in this chapter, as well as the requirements for ground-fault and arc-fault circuit interrupter protection.

Chapter 40 Devices and Luminaires. This chapter focuses on the devices, including switches and receptacles, and lighting fixtures that are typically installed during the final phase of construction.

Chapter 41 Appliance Installation. Chapter 41 addresses the installation of appliances including HVAC appliances, water heaters, fixed space-heating equipment, dishwashers, garbage disposals, range hoods and suspended paddle fans.

Chapter 42 Swimming Pools. This chapter covers the electrical installation requirements for swimming pools, storable swimming pools, wading pools, decorative pools, fountains, hot tubs, spas and hydromassage bathtubs. The allowable wiring methods are specified along with the required clearances between electrical system components and pools, spas and tubs. This chapter includes the special grounding requirements related to pools, spas and tubs, and also prescribes the equipotential bonding requirements that are unique to pools, spas and tubs.

Chapter 43 Class 2 Remote-control, Signaling and Power-limited Circuits. This chapter covers the power supplies, wiring methods and installation requirements for the Class 2 circuits found in dwellings. Such circuits include thermostat wiring, alarm systems, security systems, automated control systems and doorbell systems.

Chapter 44 Referenced Standards. The code contains numerous references to standards that are used to regulate materials and methods of construction. Chapter 44 contains a comprehensive list of all standards that are referenced in the code. The standards are part of the code to the extent of the reference to the standard. Compliance with the referenced standard is necessary for compliance with this code. By providing specifically adopted standards, the construction and installation requirements necessary for compliance with the code can be readily determined. The basis for code compliance is, therefore, established and available on an equal basis to the code official, contractor, designer and owner.

Chapter 44 is organized in a manner that makes it easy to locate specific standards. It lists all of the referenced standards, alphabetically, by acronym of the promulgating agency of the standard. Each agency's standards are then listed in either alphabetical or numeric order based upon the standard identification. The list also contains the title of the standard; the edition (date) of the standard referenced; any addenda included as part of the ICC adoption; and the section or sections of this code that reference the standard.

Appendix A Sizing and Capacities of Gas Piping. This appendix is informative and not part of the code. It provides design guidance, useful facts and data and multiple examples of how to apply the sizing tables and sizing methodologies of Chapter 24.

Appendix B Sizing of Venting Systems Serving Appliances Equipped with Draft Hoods, Category I Appliances and Appliances Listed for Use with Type B Vents. This appendix is informative and not part of the code. It contains multiple examples of how to apply the vent and chimney tables and methodologies of Chapter 24.

Appendix C Exit Terminals of Mechanical Draft and Direct-vent Venting Systems. This appendix is informative and not part of the code. It consists of a figure and notes that visually depict code requirements from Chapter 24 for vent terminals with respect to the openings found in building exterior walls.

Appendix D Recommended Procedure for Safety Inspection of an Existing Appliance Installation. This appendix is informative and not part of the code. It provides recommended procedures for testing and inspecting an appliance installation to determine if the installation is operating safely and if the appliance is in a safe condition.

Appendix E Manufactured Housing Used as Dwellings. The criteria for the construction of manufactured homes are governed by the National Manufactured Housing Construction and Safety Act. While this act may seem to cover the bulk of the construction of manufactured housing, it does not cover those areas related to the placement of the housing on the property. The provisions of Appendix E are not applicable to the design and construction of manufactured homes. Appendix E provides a complete set of regulations in conjunction with federal law for the installation of manufactured housing. This appendix also contains provisions for existing manufactured home installations.

Appendix F Radon Control Methods. Radon comes from the natural (radioactive) decay of the element radium in soil, rock and water and finds its way into the air. Appendix F contains requirements to mitigate the transfer of radon gases from the soil into the dwelling. The provisions of this appendix regulate the design and construction of radon-resistant measures intended to reduce the entry of radon gases into the living space of residential buildings.

Appendix G Piping Standards for Various Applications. Appendix G provides standards for various types of plastic piping products. This appendix is informative and is not part of the code.

Appendix H Patio Covers. Appendix H sets forth the regulations and limitations for patio covers. The provisions address those uses permitted in patio cover structures, the minimum design loads to be assigned for structural purposes, and the effect of the patio cover on egress and emergency escape or rescue from sleeping rooms. This appendix also contains the special provisions for aluminum screen enclosures in hurricane-prone regions.

Appendix I Private Sewage Disposal. Appendix I simply provides the opportunity to utilize the International Private Sewage Disposal Code for the design and installation of private sewage disposal in one- and two-family dwellings.

Appendix J Existing Buildings and Structures. Appendix J contains the provisions for the repair, renovation, alteration and reconstruction of existing buildings and structures that are within the scope of this code. To accomplish this objective and to make the rehabilitation process more available, this appendix allows for a controlled departure from full code compliance without compromising minimum life safety, fire safety, structural and environmental features of the rehabilitated existing building or structure.

Appendix K Sound Transmission. Appendix K regulates the sound transmission of wall and floor-ceiling assemblies separating dwelling units and townhouse units. Air-borne sound insulation is required for walls. Air-borne sound insulation and impact sound insulation are required for floor-ceiling assemblies. The provisions in Appendix K set forth a minimum Sound Transmission Class (STC) rating for common walls and floor-ceiling assemblies between dwelling units. In addition, a minimum Impact Insulation Class (IIC) rating is also established to limit structure-borne sound through common floor-ceiling assemblies separating dwelling units.

Appendix L Permit Fees. Appendix L provides guidance to jurisdictions for setting appropriate permit fees. This appendix will aid many jurisdictions to assess permit fees that will assist to fairly and properly administer the code. This appendix can be used for informational purposes only or may be adopted when specifically referenced in the adopting ordinance.

Appendix M Home Day Care–R-3 Occupancy. Appendix M provides means of egress and smoke detection requirements for a Group R-3 Occupancy that is to be used as a home day care for more than five children who receive custodial care for less than 24 hours. This appendix is strictly for guidance and/or adoption by those jurisdictions that have Licensed Home Care Provider laws and statutes that allow more than five children to be cared for in a person's home. When a jurisdiction adopts this appendix, the provisions for day care and child care facilities in the IBC should be considered also.

Appendix N Venting Methods. Because venting of sanitary drainage systems is perhaps the most difficult concept to understand, and Chapter 31 uses only words to describe venting requirements, illustrations can offer greater insight into what the words mean. Appendix N has a number of illustrations for commonly installed sanitary drainage systems in order for the reader to gain a better understanding of this code's venting requirements.

Appendix O Automatic Vehicular Gates. Appendix O provides the requirements for the design and construction of automatic vehicular gates. The provisions are for where automatic gates are installed for use at a vehicular entrance or exit on the lot of a one- or two-family dwelling. The requirements provide protection for individuals from potential entrapment between an automatic gate and a stationary object or surface.

Appendix P Sizing of Water Piping System. Appendix P provides two recognized methods for sizing the water service and water distribution piping for a building. The method under Section AP103 provides friction loss diagrams that require the user to "plot" points and read values from the diagrams in order to perform the required calculations and necessary checks. This method is the most accurate of the two presented in this appendix. The method under Section AP201 is known to be conservative; however, very few calculations are necessary in order to determine a pipe size that satisfies the flow requirements of any application.

Appendix Q ICC International Residential Code Electrical Provisions/National Electrical Code Cross Reference. This appendix provided a cross reference that allowed the code user to trace the code sections in Chapters 34 through 43 back to their source: the *National Electrical Code*. This appendix is no longer provided.

Appendix R Light Straw-Clay Construction. This appendix regulates the use of light straw-clay as a construction material. It is limited in application to nonbearing wall infill systems.

Appendix S Strawbale Construction. This appendix provides prescriptive requirements for the use of strawbale as a construction material. It is limited in application to the walls of one-story structures, except where additional engineering is provided.

Appendix T Recommended Procedure for Worst-Case Testing of Atmospheric Venting Systems under N1102.4 or N1105 Conditions $\leq$ 5ACH$_{50}$. This appendix is an informative appendix that is provided for testing of atmospheric venting conditions in a house when the leak tightness is less than five air changes per hour at 50 Pascals. The air leakage limitations in the energy provisions of Chapter 11 could have a direct impact on the building pressure boundary affecting the safe operation of combustion equipment.

Appendix T is intended to provide clear guidance to builders, code officials and home performance contractors for worst-case testing of atmospheric venting systems where air-sealing techniques and air-leakage performance testing requirements of Chapter 11 or the 2015 IECC are employed. Worst-case testing is used by home performance contractors to identify problems that weaken draft and restrict combustion air. Worst-case vent testing uses the home's exhaust fans, air-handling appliances and chimneys to create worst-case depressurization in the combustion appliance zone (CAZ).

Appendix U Solar-Ready Provisions—Detached One- and Two-Family Dwellings, Multiple Single-Family Dwellings (Townhouses). This appendix provides requirements for preparation of a house for future installation of solar equipment for electrical power or heating. Given the growing popularity of solar power and the possible need for the equipment in the future, this appendix, if adopted, would require an area be provided on the building roof that would accommodate solar equipment. In addition, pathways for routing of plumbing and conduit need to be provided.

LEGISLATION

Jurisdictions wishing to adopt the 2015 *International Residential Code* as an enforceable regulation governing one- and two-family dwellings and townhouses should ensure that certain factual information is included in the adopting legislation at the time adoption is being considered by the appropriate governmental body. The following sample adoption legislation addresses several key elements, including the information required for insertion into the code text.

SAMPLE LEGISLATION FOR ADOPTION OF THE *INTERNATIONAL RESIDENTIAL CODE* ORDINANCE NO._____

A[N] **[ORDINANCE/STATUTE/REGULATION]** of the **[JURISDICTION]** adopting the 2015 edition of the *International Residential Code*, regulating and governing the construction, alteration, movement, enlargement, replacement, repair, equipment, location, removal and demolition of detached one- and two-family dwellings and multiple single-family dwellings (townhouses) not more than threes stories in height with separate means of egress in the **[JURISDICTION]**; providing for the issuance of permits and collection of fees therefor; repealing **[ORDINANCE/STATUTE/REGULATION]** No. _____ of the **[JURISDICTION]** and all other ordinances or parts of laws in conflict therewith.

The **[GOVERNING BODY]** of the **[JURISDICTION]** does ordain as follows:

Section 1. That a certain document, three (3) copies of which are on file in the office of the **[TITLE OF JURISDICTION'S KEEPER OF RECORDS]** of **[NAME OF JURISDICTION]**, being marked and designated as the *International Residential Code*, 2015 edition, including Appendix Chapters **[FILL IN THE APPENDIX CHAPTERS BEING ADOPTED]** (see *International Residential Code* Section R102.5, 2015 edition), as published by the International Code Council, be and is hereby adopted as the Residential Code of the **[JURISDICTION]**, in the State of **[STATE NAME]** for regulating and governing the construction, alteration, movement, enlargement, replacement, repair, equipment, location, removal and demolition of detached one- and two-family dwellings and multiple single-family dwellings (townhouses) not more than threes stories in height with separate means of egress as herein provided; providing for the issuance of permits and collection of fees therefor; and each and all of the regulations, provisions, penalties, conditions and terms of said Residential Code on file in the office of the **[JURISDICTION]** are hereby referred to, adopted, and made a part hereof, as if fully set out in this ordinance, with the additions, insertions, deletions and changes, if any, prescribed in Section 2 of this ordinance.

Section 2. The following sections are hereby revised:

Section R101.1. Insert: **[NAME OF JURISDICTION]**

Table R301.2 (1) Insert: **[APPROPRIATE DESIGN CRITERIA]**

Section P2603.5.1 Insert: **[NUMBER OF INCHES IN TWO LOCATIONS]**

Section 3. That **[ORDINANCE/STATUTE/REGULATION]** No. _____ of **[JURISDICTION]** entitled **[FILL IN HERE THE COMPLETE TITLE OF THE LEGISLATION OR LAWS IN EFFECT AT THE PRESENT TIME SO THAT THEY WILL BE REPEALED BY DEFINITE MENTION]** and all other ordinances or parts of laws in conflict herewith are hereby repealed.

Section 4. That if any section, subsection, sentence, clause or phrase of this legislation is, for any reason, held to be unconstitutional, such decision shall not affect the validity of the remaining portions of this ordinance. The **[GOVERNING BODY]** hereby declares that it would have passed this law, and each section, subsection, clause or phrase thereof, irrespective of the fact that any one or more sections, subsections, sentences, clauses and phrases be declared unconstitutional.

Section 5. That nothing in this legislation or in the Residential Code hereby adopted shall be construed to affect any suit or proceeding impending in any court, or any rights acquired, or liability incurred, or any cause or causes of action acquired or existing, under any act or ordinance hereby repealed as cited in Section 3 of this law; nor shall any just or legal right or remedy of any character be lost, impaired or affected by this legislation.

Section 6. That the **[JURISDICTION'S KEEPER OF RECORDS]** is hereby ordered and directed to cause this legislation to be published. (An additional provision may be required to direct the number of times the legislation is to be published and to specify that it is to be in a newspaper in general circulation. Posting may also be required.)

Section 7. That this law and the rules, regulations, provisions, requirements, orders and matters established and adopted hereby shall take effect and be in full force and effect **[TIME PERIOD]** from and after the date of its final passage and adoption.

TABLE OF CONTENTS

Part I—Administrative 1

CHAPTER 1 SCOPE AND ADMINISTRATION 1

PART 1—SCOPE AND APPLICATION 1

Section

R101 General 1

R102 Applicability 1

PART 2—ADMINISTRATION AND ENFORCEMENT 2

Section

R103 Department of Building Safety 2

R104 Duties and Powers of the Building Official 2

R105 Permits 3

R106 Construction Documents 5

R107 Temporary Structures and Uses 6

R108 Fees 7

R109 Inspections 7

R110 Certificate of Occupancy 8

R111 Service Utilities 8

R112 Board of Appeals 8

R113 Violations 9

R114 Stop Work Order 9

Part II—Definitions *11*

CHAPTER 2 DEFINITIONS 11

Section

R201 General 11

R202 Definitions 11

Part III—Building Planning and Construction *27*

CHAPTER 3 BUILDING PLANNING 27

Section

R301 Design Criteria 27

R302 Fire-resistant Construction 50

R303 Light, Ventilation and Heating 55

R304 Minimum Room Areas 57

R305 Ceiling Height 57

R306 Sanitation 57

R307 Toilet, Bath and Shower Spaces 57

R308 Glazing 57

R309 Garages and Carports 61

R310 Emergency Escape and Rescue Openings 62

R311 Means of Egress 63

R312 Guards and Window Fall Protection 66

R313 Automatic Fire Sprinkler Systems 67

R314 Smoke Alarms 67

R315 Carbon Monoxide Alarms 68

R316 Foam Plastic 68

R317 Protection of Wood and Wood-based Products against Decay 70

R318 Protection against Subterranean Termites 72

R319 Site Address 72

R320 Accessibility 73

R321 Elevators and Platform Lifts 73

R322 Flood-resistant Construction 73

R323 Storm Shelters 76

R324 Solar Energy Systems 76

R325 Mezzanines 77

R326 Swimming Pools, Spas and Hot Tubs 77

CHAPTER 4 FOUNDATIONS 79

Section

R401 General 79

R402 Materials 79

R403 Footings 80

R404 Foundation and Retaining Walls 101

R405 Foundation Drainage 119

R406 Foundation Waterproofing and Dampproofing 120

R407 Columns 121

R408 Under-floor Space 121

CHAPTER 5 FLOORS 123

Section

R501 General 123

R502 Wood Floor Framing 123

R503 Floor Sheathing 132

R504 Pressure Preservative-treated-wood Floors (On Ground) 133

R505 Cold-formed Steel Floor Framing 134

R506 Concrete Floors (On Ground) 149
R507 Exterior Decks 149

CHAPTER 6 WALL CONSTRUCTION 157
Section
R601 General 157
R602 Wood Wall Framing 157
R603 Cold-formed Steel Wall Framing 203
R604 Wood Structural Panels 244
R605 Particleboard 244
R606 General Masonry Construction 244
R607 Glass Unit Masonry 256
R608 Exterior Concrete Wall Construction 258
R609 Exterior Windows and Doors 328
R610 Structural Insulated Panel Wall Construction 331

CHAPTER 7 WALL COVERING 341
Section
R701 General 341
R702 Interior Covering 341
R703 Exterior Covering 345

CHAPTER 8 ROOF-CEILING CONSTRUCTION 365
Section
R801 General 365
R802 Wood Roof Framing 365
R803 Roof Sheathing 393
R804 Cold-formed Steel Roof Framing 393
R805 Ceiling Finishes 409
R806 Roof Ventilation 409
R807 Attic Access 411

CHAPTER 9 ROOF ASSEMBLIES 413
Section
R901 General 413
R902 Fire Classification 413
R903 Weather Protection 413
R904 Materials 414
R905 Requirements for Roof Coverings 414
R906 Roof Insulation 425
R907 Rooftop-mounted Photovoltaic Systems 425
R908 Reroofing 426
R909 Rooftop-mounted Photovoltaic Panel Systems 426

CHAPTER 10 CHIMNEYS AND FIREPLACES . . . *427*
Section
R1001 Masonry Fireplaces 427
R1002 Masonry Heaters 431
R1003 Masonry Chimneys 431
R1004 Factory-built Fireplaces 436
R1005 Factory-built Chimneys 436
R1006 Exterior Air Supply 436

Part IV—Energy Conservation 437

CHAPTER 11 [RE] ENERGY EFFICIENCY 437
Section
N1101 General 437
N1102 Building Thermal Envelope 455
N1103 Systems 461
N1104 Electrical Power and Lighting Systems (Mandatory) 463
N1105 Simulated Performance Alternative (Performance) 463
N1106 Energy Rating Index Compliance Alternative 467
N1107 Existing Buildings—General 468
N1108 Additions 469
N1109 Alterations 469
N1110 Repairs 470
N1111 Change of Occupancy or Use 470

Part V—Mechanical 471

CHAPTER 12 MECHANICAL ADMINISTRATION 471
Section
M1201 General 471
M1202 Existing Mechanical Systems 471

CHAPTER 13 GENERAL MECHANICAL SYSTEM REQUIREMENTS 473
Section
M1301 General 473
M1302 Approval 473
M1303 Labeling of Appliances 473
M1304 Type of Fuel 473
M1305 Appliance Access 473
M1306 Clearances from Combustible Construction . . . 474
M1307 Appliance Installation 475
M1308 Mechanical Systems Installation 478

CHAPTER 14 HEATING AND COOLING EQUIPMENT AND APPLIANCES 479

Section

M1401 General 479
M1402 Central Furnaces 479
M1403 Heat Pump Equipment 479
M1404 Refrigeration Cooling Equipment 479
M1405 Baseboard Convectors 479
M1406 Radiant Heating Systems 479
M1407 Duct Heaters 480
M1408 Vented Floor Furnaces 480
M1409 Vented Wall Furnaces 481
M1410 Vented Room Heaters 481
M1411 Heating and Cooling Equipment 481
M1412 Absorption Cooling Equipment 482
M1413 Evaporative Cooling Equipment 482
M1414 Fireplace Stoves 483
M1415 Masonry Heaters 483

CHAPTER 15 EXHAUST SYSTEMS 485

Section

M1501 General 485
M1502 Clothes Dryer Exhaust 485
M1503 Range Hoods 486
M1504 Installation of Microwave Ovens 486
M1505 Overhead Exhaust Hoods 486
M1506 Exhaust Ducts and Exhaust Openings 487
M1507 Mechanical Ventilation 487

CHAPTER 16 DUCT SYSTEMS 489

Section

M1601 Duct Construction 489
M1602 Return Air 492

CHAPTER 17 COMBUSTION AIR 493

Section

M1701 General 493

CHAPTER 18 CHIMNEYS AND VENTS 495

Section

M1801 General 495
M1802 Vent Components 495
M1803 Chimney and Vent Connectors 496
M1804 Vents 497
M1805 Masonry and Factory-built Chimneys 497

CHAPTER 19 SPECIAL APPLIANCES, EQUIPMENT AND SYSTEMS 499

Section

M1901 Ranges and Ovens 499
M1902 Sauna Heaters 499
M1903 Stationary Fuel Cell Power Plants 499
M1904 Gaseous Hydrogen Systems 499

CHAPTER 20 BOILERS AND WATER HEATERS 501

Section

M2001 Boilers 501
M2002 Operating and Safety Controls 501
M2003 Expansion Tanks 501
M2004 Water Heaters Used for Space Heating 502
M2005 Water Heaters 502
M2006 Pool Heaters 502

CHAPTER 21 HYDRONIC PIPING 503

Section

M2101 Hydronic Piping Systems Installation 503
M2102 Baseboard Convectors 503
M2103 Floor Heating Systems 503
M2104 Low Temperature Piping 505
M2105 Ground-Source Heat-Pump System Loop Piping 505

CHAPTER 22 SPECIAL PIPING AND STORAGE SYSTEMS 509

Section

M2201 Oil Tanks 509
M2202 Oil Piping, Fitting and Connections 509
M2203 Installation 509
M2204 Oil Pumps and Valves 510

CHAPTER 23 SOLAR THERMAL ENERGY SYSTEMS 511

Section

M2301 Thermal Solar Energy Systems 511

Part VI—Fuel Gas 513

CHAPTER 24 FUEL GAS 513

Section

G2401 General 513
G2402 General 513

G2403 General Definitions 513
G2404 General 519
G2405 Structural Safety 520
G2406 Appliance Location 520
G2407 Combustion, Ventilation and Dilution Air 521
G2408 Installation 525
G2409 Clearance Reduction 525
G2410 Electrical 529
G2411 Electrical Bonding 529
G2412 General 529
G2413 Pipe Sizing 530
G2414 Piping Materials 552
G2415 Piping System Installation 553
G2416 Piping Bends and Changes in Direction 556
G2417 Inspection, Testing and Purging 556
G2418 Piping Support 558
G2419 Drips and Sloped Piping 558
G2420 Shutoff Valves 559
G2421 Flow Controls 559
G2422 Appliance Connections 560
G2423 Compressed Natural Gas Motor Vehicle Fuel-dispensing Facilities 561
G2424 Piping Support Intervals 561
G2425 General 561
G2426 Vents 562
G2427 Venting of Appliances 563
G2428 Sizing of Category I Appliance Venting Systems 572
G2429 Direct-vent, Integral Vent, Mechanical Vent and Ventilation/Exhaust Hood Venting 584
G2430 Factory-built Chimneys 584
G2431 General 584
G2432 Decorative Appliances for Installation in Fireplaces 584
G2433 Log Lighters 584
G2434 Vented Gas Fireplaces (Decorative Appliances) 584
G2435 Vented Gas Fireplace Heaters 584
G2436 Vented Wall Furnaces 584
G2437 Floor Furnaces 585
G2438 Clothes Dryers 585
G2439 Clothes Dryer Exhaust 585
G2440 Sauna Heaters 586
G2441 Pool and Spa Heaters 587
G2442 Forced-air Warm-air Furnaces 587
G2443 Conversion Burners 588
G2444 Unit Heaters 588
G2445 Unvented Room Heaters 588
G2446 Vented Room Heaters 588
G2447 Cooking Appliances 588
G2448 Water Heaters 589
G2449 Air-Conditioning Appliances 589
G2450 Illuminating Appliances 589
G2451 Infrared Radiant Heaters 590
G2452 Boilers 590
G2453 Chimney Damper Opening Area 590
G2454 Outdoor Decorative Appliances 590

***Part VII—Plumbing* 591**

CHAPTER 25 PLUMBING ADMINISTRATION 591

Section
P2501 General 591
P2502 Existing Plumbing Systems 591
P2503 Inspection and Tests 591

CHAPTER 26 GENERAL PLUMBING REQUIREMENTS 593

Section
P2601 General 593
P2602 Individual Water Supply and Sewage Disposal 593
P2603 Structural and Piping Protection 593
P2604 Trenching and Backfilling 594
P2605 Support 594
P2606 Penetrations 595
P2607 Waterproofing of Openings 595
P2608 Workmanship 595
P2609 Materials Evaluation and Listing 595

CHAPTER 27 PLUMBING FIXTURES 597

Section
P2701 Fixtures, Faucets and Fixture Fittings 597
P2702 Fixture Accessories 597
P2703 Tail Pieces 597
P2704 Access to Connections 597
P2705 Installation 597
P2706 Waste Receptors 597
P2707 Directional Fittings 599
P2708 Showers 599

P2709 Shower Receptors 599
P2710 Shower Walls 600
P2711 Lavatories 600
P2712 Water Closets 600
P2713 Bathtubs 601
P2714 Sinks 601
P2715 Laundry Tubs 601
P2716 Food-Waste Disposer 601
P2717 Dishwashing Machines 601
P2718 Clothes Washing Machine 601
P2719 Floor Drains 601
P2720 Whirlpool Bathtubs 601
P2721 Bidet Installations 601
P2722 Fixture Fitting 602
P2723 Macerating Toilet Systems 602
P2724 Speciality Temperature Control Devices and Valves 602
P2725 Nonliquid Saturated Treatment Systems 602

CHAPTER 28 WATER HEATERS 603

Section
P2801 General 603
P2802 Solar Water Heating Systems 603
P2803 Water Heaters Used for Space Heating 603
P2804 Relief Valves 604

CHAPTER 29 WATER SUPPLY AND DISTRIBUTION 605

Section
P2901 General 605
P2902 Protection of Potable Water Supply 605
P2903 Water Supply System 608
P2904 Dwelling Unit Fire Sprinkler Systems 613
P2905 Heated Water Distribution Systems 624
P2906 Materials, Joints and Connections 624
P2907 Changes in Direction 627
P2908 Support 627
P2909 Drinking Water Treatment Units 628
P2910 Nonpotable Water Systems 628
P2911 On-site Nonpotable Water Reuse Systems 631
P2912 Nonpotable Rainwater Collection and Distribution Systems 632
P2913 Reclaimed Water Systems 634

CHAPTER 30 SANITARY DRAINAGE 635

Section
P3001 General 635
P3002 Materials 635
P3003 Joints and Connections 637
P3004 Determining Drainage Fixture Units 639
P3005 Drainage System 639
P3006 Sizing of Drain Pipe Offsets 643
P3007 Sumps and Ejectors 643
P3008 Backwater Valves 644
P3009 Subsurface Landscape Irrigation Systems 644
P3010 Replacement of Underground Sewers by Pipe Bursting Methods 646

CHAPTER 31 VENTS 647

Section
P3101 Vent Systems 647
P3102 Vent Stacks and Stack Vents 647
P3103 Vent Terminals 647
P3104 Vent Connections and Grades 647
P3105 Fixture Vents 648
P3106 Individual Vent 648
P3107 Common Vent 648
P3108 Wet Venting 648
P3109 Waste Stack Vent 649
P3110 Circuit Venting 649
P3111 Combination Waste and Vent System 649
P3112 Island Fixture Venting 650
P3113 Vent Pipe Sizing 650
P3114 Air Admittance Valves 650

CHAPTER 32 TRAPS 653

Section
P3201 Fixture Traps 653

CHAPTER 33 STORM DRAINAGE 655

Section
P3301 General 655
P3302 Subsoil Drains 655
P3303 Sumps and Pumping Systems 655

Part VIII—Electrical 657

CHAPTER 34 GENERAL REQUIREMENTS 657

Section

E3401 General 657
E3402 Building Structure Protection 658
E3403 Inspection and Approval 658
E3404 General Equipment Requirements 658
E3405 Equipment Location and Clearances 660
E3406 Electrical Conductors and Connections 660
E3407 Conductor and Terminal Identification 663

CHAPTER 35 ELECTRICAL DEFINITIONS 665

Section

E3501 General 665

CHAPTER 36 SERVICES 671

Section

E3601 General Services 671
E3602 Service Size and Rating 671
E3603 Service, Feeder and Grounding Electrode Conductor Sizing 672
E3604 Overhead Service and Service-entrance Conductor Installation 673
E3605 Service-entrance Conductors 675
E3606 Service Equipment—General 675
E3607 System Grounding 676
E3608 Grounding Electrode System 676
E3609 Bonding 678
E3610 Grounding Electrode Conductors 679
E3611 Grounding Electrode Conductor Connection to the Grounding Electrodes 679

CHAPTER 37 BRANCH CIRCUIT AND FEEDER REQUIREMENTS 681

Section

E3701 General 681
E3702 Branch Circuit Ratings 681
E3703 Required Branch Circuits 682
E3704 Feeder Requirements 683
E3705 Conductor Sizing and Overcurrent Protection 684
E3706 Panelboards 687

CHAPTER 38 WIRING METHODS 689

Section

E3801 General Requirements 689
E3802 Above-ground Installation Requirements 689
E3803 Underground Installation Requirements 691

CHAPTER 39 POWER AND LIGHTING DISTRIBUTION 695

Section

E3901 Receptacle Outlets 695
E3902 Ground-fault and Arc-fault Circuit-interrupter Protection 697
E3903 Lighting Outlets 699
E3904 General Installation Requirements 699
E3905 Boxes, Conduit Bodies and Fittings 711
E3906 Installation of Boxes, Conduit Bodies and Fittings 714
E3907 Cabinets and Panelboards 716
E3908 Grounding 717
E3909 Flexible Cords 721

CHAPTER 40 DEVICES AND LUMINAIRES 723

Section

E4001 Switches 723
E4002 Receptacles 724
E4003 Luminaires 725
E4004 Luminaire Installation 727
E4005 Track Lighting 728

CHAPTER 41 APPLIANCE INSTALLATION 729

Section

E4101 General 729

CHAPTER 42 SWIMMING POOLS 733

Section

E4201 General 733
E4202 Wiring Methods for Pools, Spas, Hot Tubs and Hydromassage Bathtubs 733
E4203 Equipment Location and Clearances 735
E4204 Bonding 737
E4205 Grounding 739
E4206 Equipment Installation 740
E4207 Storable Swimming Pools, Storable Spas, and Storable Hot Tubs 742

E4208 Spas and Hot Tubs 743
E4209 Hydromassage Bathtubs 743

CHAPTER 43 CLASS 2 REMOTE-CONTROL, SIGNALING AND POWER-LIMITED CIRCUITS 745

Section
E4301 General 745
E4302 Power Sources 745
E4303 Wiring Methods 745
E4304 Installation Requirements 746

Part IX—Referenced Standards 747

CHAPTER 44 REFERENCED STANDARDS *747*

APPENDIX A SIZING AND CAPACITIES OF GAS PIPING 773

APPENDIX B SIZING OF VENTING SYSTEMS SERVING APPLIANCES EQUIPPED WITH DRAFT HOODS, CATEGORY I APPLIANCES, AND APPLIANCES LISTED FOR USE WITH TYPE B VENTS 785

APPENDIX C EXIT TERMINALS OF MECHANICAL DRAFT AND DIRECT-VENT VENTING SYSTEMS 795

APPENDIX D RECOMMENDED PROCEDURE FOR SAFETY INSPECTION OF AN EXISTING APPLIANCE INSTALLATION 797

APPENDIX E MANUFACTURED HOUSING USED AS DWELLINGS 803

Section
AE101 Scope 803
AE102 Application to Existing Manufactured Homes and Building Service Equipment 803
AE201 Definitions 804
AE301 Permits 804
AE302 Application for Permit 804
AE303 Permits Issuance 805
AE304 Fees 806
AE305 Inspections 806
AE306 Special Inspections 807
AE307 Utility Service 807
AE401 Occupancy Classification 807
AE402 Location on Property 807
AE501 Design 807
AE502 Foundation Systems 808
AE503 Skirting and Perimeter Enclosures 808
AE504 Structural Additions 808
AE505 Building Service Equipment 809
AE506 Exits 809
AE507 Occupancy, Fire Safety and Energy Conservation Standards 809
AE600 Special Requirements for Foundation Systems 809
AE601 Footings and Foundations 809
AE602 Pier Construction 809
AE603 Height of Piers 809
AE604 Anchorage Installations 810
AE605 Ties, Materials and Installation 810
AE606 Referenced Standards 811

APPENDIX F PASSIVE RADON GAS CONTROLS METHODS 813

Section
AF101 Scope 813
AF102 Definitions 813
AF103 Passive Radon-resistant System Requirements 813

APPENDIX G PIPING STANDARDS FOR VARIOUS APPLICATIONS 819

Section
AG101 Plastic Piping Standards 819
AG102 Referenced Standards 822

APPENDIX H PATIO COVERS 823

Section
AH101 General 823
AH102 Definition 823
AH103 Exterior Walls and Openings 823
AH104 Height 823
AH105 Structural Provisions 823
AH106 Special Provisions for Aluminum Screen Enclosures in Hurricane-prone Regions 823

APPENDIX I PRIVATE SEWAGE DISPOSAL . . . 827

Section
AI101 General 827

APPENDIX J EXISTING BUILDINGS AND STRUCTURES 829

Section

AJ101 Purpose and Intent 829
AJ102 Compliance 829
AJ103 Preliminary Meeting 830
AJ104 Evaluation of an Existing Building 830
AJ105 Permit 830
AJ201 Definitions 830
AJ301 Repairs 831
AJ401 Renovations 831
AJ501 Alterations 831
AJ601 Reconstruction 832

APPENDIX K SOUND TRANSMISSION 835

Section

AK101 General 835
AK102 Air-borne Sound 835
AK103 Structural-borne Sound 835
AK104 Referenced Standards 835

APPENDIX L PERMIT FEES 837

APPENDIX M HOME DAY CARE—R-3 OCCUPANCY 839

Section

AM101 General 839
AM102 Definition 839
AM103 Means of Egress 839
AM104 Smoke Detection 840

APPENDIX N VENTING METHODS 841

APPENDIX O AUTOMATIC VEHICULAR GATES 847

Section

AO101 General 847
AO102 Definitions 847
AO103 Automatic Vehicular Gates 847

APPENDIX P SIZING OF WATER PIPING SYSTEM 849

Section

AP101 General 849
AP102 Information Required 849
AP103 Selection of Pipe Size 849
AP201 Selection of Pipe Size 866

APPENDIX Q RESERVED 869

APPENDIX R LIGHT STRAW-CLAY CONSTRUCTION 871

Section

AR101 General 871
AR102 Definitions 871
AR103 Nonbearing Light Straw-Clay Construction 871
AR104 Thermal Insulation 873
AR105 Referenced Standard 873

APPENDIX S STRAWBALE CONSTRUCTION ... 875

Section

AS101 General 875
AS102 Definitions 875
AS103 Bales 875
AS104 Finishes 876
AS105 Strawbale Walls—General 877
AS106 Strawbale Walls—Structural 879
AS107 Fire Resistance 882
AS108 Thermal Insulation 883
AS109 Referenced Standards 883

APPENDIX T RECOMMENDED PROCEDURE FOR WORST-CASE TESTING OF ATMOSPHERIC VENTING SYSTEMS UNDER N1102.4 OR N1105 CONDITIONS $\leq 5ACH_{50}$ 885

Section

T101 Scope 885
T202 General Definitions 885
T301 Testing Procedure 885

APPENDIX U SOLAR-READY PROVISIONS-DETACHED ONE- AND TWO-FAMILY DWELLINGS, MULTIPLE SINGLE-FAMILY DWELLINGS (TOWNHOUSES) ... 887

Section

U101 Scope 887
U102 General Definitions 887
U103 Solar-ready Zone 887

INDEX 889

Part I—Administrative

CHAPTER 1

SCOPE AND ADMINISTRATION

PART 1—SCOPE AND APPLICATION

SECTION R101
GENERAL

R101.1 Title. These provisions shall be known as the *Residential Code for One- and Two-family Dwellings* of **[NAME OF JURISDICTION]**, and shall be cited as such and will be referred to herein as "this code."

R101.2 Scope. The provisions of the *International Residential Code for One- and Two-family Dwellings* shall apply to the construction, *alteration*, movement, enlargement, replacement, repair, *equipment*, use and occupancy, location, removal and demolition of detached one- and two-family dwellings and *townhouses* not more than three stories above *grade plane* in height with a separate means of egress and their *accessory structures* not more than three stories above *grade plane* in height.

Exceptions:

1. Live/work units located in *townhouses* and complying with the requirements of Section 419 of the *International Building Code* shall be permitted to be constructed in accordance with the *International Residential Code for One- and Two-Family Dwellings*. Fire suppression required by Section 419.5 of the *International Building Code* where constructed under the *International Residential Code for One- and Two-family Dwellings* shall conform to Section P2904.
2. Owner-occupied lodging houses with five or fewer guestrooms shall be permitted to be constructed in accordance with the *International Residential Code for One- and Two-family Dwellings* where equipped with a fire sprinkler system in accordance with Section P2904.

R101.3 Intent. The purpose of this code is to establish minimum requirements to safeguard the public safety, health and general welfare through affordability, structural strength, means of egress facilities, stability, sanitation, light and ventilation, energy conservation and safety to life and property from fire and other hazards attributed to the built environment and to provide safety to fire fighters and emergency responders during emergency operations.

SECTION R102
APPLICABILITY

R102.1 General. Where there is a conflict between a general requirement and a specific requirement, the specific requirement shall be applicable. Where, in any specific case, different sections of this code specify different materials, methods of construction or other requirements, the most restrictive shall govern.

R102.2 Other laws. The provisions of this code shall not be deemed to nullify any provisions of local, state or federal law.

R102.3 Application of references. References to chapter or section numbers, or to provisions not specifically identified by number, shall be construed to refer to such chapter, section or provision of this code.

R102.4 Referenced codes and standards. The codes and standards referenced in this code shall be considered part of the requirements of this code to the prescribed extent of each such reference and as further regulated in Sections R102.4.1 and R102.4.2.

Exception: Where enforcement of a code provision would violate the conditions of the *listing* of the *equipment* or *appliance*, the conditions of the *listing* and manufacturer's instructions shall apply.

R102.4.1 Conflicts. Where conflicts occur between provisions of this code and referenced codes and standards, the provisions of this code shall apply.

R102.4.2 Provisions in referenced codes and standards. Where the extent of the reference to a referenced code or standard includes subject matter that is within the scope of this code, the provisions of this code, as applicable, shall take precedence over the provisions in the referenced code or standard.

R102.5 Appendices. Provisions in the appendices shall not apply unless specifically referenced in the adopting ordinance.

R102.6 Partial invalidity. In the event any part or provision of this code is held to be illegal or void, this shall not have the effect of making void or illegal any of the other parts or provisions.

R102.7 Existing structures. The legal occupancy of any structure existing on the date of adoption of this code shall be permitted to continue without change, except as is specifically covered in this code, the *International Property Mainte-*

nance Code or the *International Fire Code*, or as is deemed necessary by the *building official* for the general safety and welfare of the occupants and the public.

R102.7.1 Additions, alterations or repairs. *Additions, alterations* or repairs to any structure shall conform to the requirements for a new structure without requiring the existing structure to comply with the requirements of this code, unless otherwise stated. *Additions, alterations,* repairs and relocations shall not cause an existing structure to become unsafe or adversely affect the performance of the building.

PART 2—ADMINISTRATION AND ENFORCEMENT

SECTION R103
DEPARTMENT OF BUILDING SAFETY

R103.1 Creation of enforcement agency. The department of building safety is hereby created and the official in charge thereof shall be known as the *building official.*

R103.2 Appointment. The *building official* shall be appointed by the *jurisdiction.*

R103.3 Deputies. In accordance with the prescribed procedures of this *jurisdiction* and with the concurrence of the appointing authority, the *building official* shall have the authority to appoint a deputy *building official*, the related technical officers, inspectors, plan examiners and other employees. Such employees shall have powers as delegated by the *building official.*

SECTION R104
DUTIES AND POWERS OF THE BUILDING OFFICIAL

R104.1 General. The *building official* is hereby authorized and directed to enforce the provisions of this code. The *building official* shall have the authority to render interpretations of this code and to adopt policies and procedures in order to clarify the application of its provisions. Such interpretations, policies and procedures shall be in conformance with the intent and purpose of this code. Such policies and procedures shall not have the effect of waiving requirements specifically provided for in this code.

R104.2 Applications and permits. The *building official* shall receive applications, review *construction documents* and issue *permits* for the erection and *alteration* of buildings and structures, inspect the premises for which such permits have been issued and enforce compliance with the provisions of this code.

R104.3 Notices and orders. The *building official* shall issue necessary notices or orders to ensure compliance with this code.

R104.4 Inspections. The *building official* shall make the required inspections, or the *building official* shall have the authority to accept reports of inspection by *approved agencies* or individuals. Reports of such inspections shall be in writing and be certified by a responsible officer of such *approved agency* or by the responsible individual. The *building official* is authorized to engage such expert opinion as deemed necessary to report upon unusual technical issues that arise, subject to the approval of the appointing authority.

R104.5 Identification. The *building official* shall carry proper identification when inspecting structures or premises in the performance of duties under this code.

R104.6 Right of entry. Where it is necessary to make an inspection to enforce the provisions of this code, or where the *building official* has reasonable cause to believe that there exists in a structure or upon a premises a condition that is contrary to or in violation of this code that makes the structure or premises unsafe, dangerous or hazardous, the *building official* or designee is authorized to enter the structure or premises at reasonable times to inspect or to perform the duties imposed by this code, provided that if such structure or premises be occupied that credentials be presented to the occupant and entry requested. If such structure or premises is unoccupied, the *building official* shall first make a reasonable effort to locate the owner, the owner's authorized agent, or other person having charge or control of the structure or premises and request entry. If entry is refused, the *building official* shall have recourse to the remedies provided by law to secure entry.

R104.7 Department records. The *building official* shall keep official records of applications received, *permits* and certificates issued, fees collected, reports of inspections, and notices and orders issued. Such records shall be retained in the official records for the period required for the retention of public records.

R104.8 Liability. The *building official*, member of the board of appeals or employee charged with the enforcement of this code, while acting for the *jurisdiction* in good faith and without malice in the discharge of the duties required by this code or other pertinent law or ordinance, shall not thereby be rendered civilly or criminally liable personally and is hereby relieved from personal liability for any damage accruing to persons or property as a result of any act or by reason of an act or omission in the discharge of official duties.

R104.8.1 Legal defense. Any suit or criminal complaint instituted against an officer or employee because of an act performed by that officer or employee in the lawful discharge of duties and under the provisions of this code shall be defended by legal representatives of the *jurisdiction* until the final termination of the proceedings. The *building official* or any subordinate shall not be liable for cost in any action, suit or proceeding that is instituted in pursuance of the provisions of this code.

R104.9 Approved materials and equipment. Materials, *equipment* and devices *approved* by the *building official* shall be constructed and installed in accordance with such approval.

R104.9.1 Used materials and equipment. Used materials, *equipment* and devices shall not be reused unless *approved* by the *building official.*

R104.10 Modifications. Where there are practical difficulties involved in carrying out the provisions of this code, the *building official* shall have the authority to grant modifica-

tions for individual cases, provided the *building official* shall first find that special individual reason makes the strict letter of this code impractical and the modification is in compliance with the intent and purpose of this code and that such modification does not lessen health, life and fire safety or structural requirements. The details of action granting modifications shall be recorded and entered in the files of the department of building safety.

R104.10.1 Flood hazard areas. The *building official* shall not grant modifications to any provisions required in flood hazard areas as established by Table R301.2(1) unless a determination has been made that:

1. There is good and sufficient cause showing that the unique characteristics of the size, configuration or topography of the site render the elevation standards of Section R322 inappropriate.
2. Failure to grant the modification would result in exceptional hardship by rendering the lot undevelopable.
3. The granting of modification will not result in increased flood heights, additional threats to public safety, extraordinary public expense, cause fraud on or victimization of the public, or conflict with existing laws or ordinances.
4. The modification is the minimum necessary to afford relief, considering the flood hazard.
5. Written notice specifying the difference between the design flood elevation and the elevation to which the building is to be built, stating that the cost of flood insurance will be commensurate with the increased risk resulting from the reduced floor elevation and stating that construction below the design flood elevation increases risks to life and property, has been submitted to the applicant.

R104.11 Alternative materials, design and methods of construction and equipment. The provisions of this code are not intended to prevent the installation of any material or to prohibit any design or method of construction not specifically prescribed by this code, provided that any such alternative has been *approved*. An alternative material, design or method of construction shall be *approved* where the *building official* finds that the proposed design is satisfactory and complies with the intent of the provisions of this code, and that the material, method or work offered is, for the purpose intended, not less than the equivalent of that prescribed in this code. Compliance with the specific performance-based provisions of the International Codes shall be an alternative to the specific requirements of this code. Where the alternative material, design or method of construction is not *approved*, the *building official* shall respond in writing, stating the reasons why the alternative was not *approved*.

R104.11.1 Tests. Where there is insufficient evidence of compliance with the provisions of this code, or evidence that a material or method does not conform to the requirements of this code, or in order to substantiate claims for alternative materials or methods, the *building official* shall have the authority to require tests as evidence of compliance to be made at no expense to the *jurisdiction*. Test methods shall be as specified in this code or by other recognized test standards. In the absence of recognized and accepted test methods, the *building official* shall approve the testing procedures. Tests shall be performed by an *approved* agency. Reports of such tests shall be retained by the *building official* for the period required for retention of public records.

SECTION R105
PERMITS

R105.1 Required. Any owner or owner's authorized agent who intends to construct, enlarge, alter, repair, move, demolish or change the occupancy of a building or structure, or to erect, install, enlarge, alter, repair, remove, convert or replace any electrical, gas, mechanical or plumbing system, the installation of which is regulated by this code, or to cause any such work to be performed, shall first make application to the *building official* and obtain the required *permit*.

R105.2 Work exempt from permit. Exemption from *permit* requirements of this code shall not be deemed to grant authorization for any work to be done in any manner in violation of the provisions of this code or any other laws or ordinances of this *jurisdiction*. *Permits* shall not be required for the following:

Building:

1. One-*story* detached *accessory structures*, provided that the floor area does not exceed 200 square feet (18.58 m^2).
2. Fences not over 7 feet (2134 mm) high.
3. Retaining walls that are not over 4 feet (1219 mm) in height measured from the bottom of the footing to the top of the wall, unless supporting a surcharge.
4. Water tanks supported directly upon *grade* if the capacity does not exceed 5,000 gallons (18 927 L) and the ratio of height to diameter or width does not exceed 2 to 1.
5. Sidewalks and driveways.
6. Painting, papering, tiling, carpeting, cabinets, counter tops and similar finish work.
7. Prefabricated swimming pools that are less than 24 inches (610 mm) deep.
8. Swings and other playground equipment.
9. Window awnings supported by an exterior wall that do not project more than 54 inches (1372 mm) from the exterior wall and do not require additional support.
10. Decks not exceeding 200 square feet (18.58 m^2) in area, that are not more than 30 inches (762 mm) above *grade* at any point, are not attached to a dwelling do not serve the exit door required by Section R311.4.

Electrical:

1. *Listed* cord-and-plug connected temporary decorative lighting.
2. Reinstallation of attachment plug receptacles but not the outlets therefor.
3. Replacement of branch circuit overcurrent devices of the required capacity in the same location.
4. Electrical wiring, devices, *appliances,* apparatus or *equipment* operating at less than 25 volts and not capable of supplying more than 50 watts of energy.
5. Minor repair work, including the replacement of lamps or the connection of *approved* portable electrical *equipment* to *approved* permanently installed receptacles.

Gas:

1. Portable heating, cooking or clothes drying *appliances.*
2. Replacement of any minor part that does not alter approval of *equipment* or make such *equipment* unsafe.
3. Portable-fuel-cell *appliances* that are not connected to a fixed piping system and are not interconnected to a power grid.

Mechanical:

1. Portable heating *appliances.*
2. Portable ventilation *appliances.*
3. Portable cooling units.
4. Steam, hot- or chilled-water piping within any heating or cooling *equipment* regulated by this code.
5. Replacement of any minor part that does not alter approval of *equipment* or make such *equipment* unsafe.
6. Portable evaporative coolers.
7. Self-contained refrigeration systems containing 10 pounds (4.54 kg) or less of refrigerant or that are actuated by motors of 1 horsepower (746 W) or less.
8. Portable-fuel-cell *appliances* that are not connected to a fixed piping system and are not interconnected to a power grid.

Plumbing:

1. The stopping of leaks in drains, water, soil, waste or vent pipe; provided, however, that if any concealed trap, drainpipe, water, soil, waste or vent pipe becomes defective and it becomes necessary to remove and replace the same with new material, such work shall be considered as new work and a *permit* shall be obtained and inspection made as provided in this code.
2. The clearing of stoppages or the repairing of leaks in pipes, valves or fixtures, and the removal and reinstallation of water closets, provided such repairs do not involve or require the replacement or rearrangement of valves, pipes or fixtures.

R105.2.1 Emergency repairs. Where *equipment* replacements and repairs must be performed in an emergency situation, the *permit* application shall be submitted within the next working business day to the *building official.*

R105.2.2 Repairs. Application or notice to the *building official* is not required for ordinary repairs to structures, replacement of lamps or the connection of *approved* portable electrical *equipment* to *approved* permanently installed receptacles. Such repairs shall not include the cutting away of any wall, partition or portion thereof, the removal or cutting of any structural beam or load-bearing support, or the removal or change of any required means of egress, or rearrangement of parts of a structure affecting the egress requirements; nor shall ordinary repairs include *addition* to, *alteration* of, replacement or relocation of any water supply, sewer, drainage, drain leader, gas, soil, waste, vent or similar piping, electric wiring or mechanical or other work affecting public health or general safety.

R105.2.3 Public service agencies. A *permit* shall not be required for the installation, *alteration* or repair of generation, transmission, distribution, metering or other related *equipment* that is under the ownership and control of public service agencies by established right.

R105.3 Application for permit. To obtain a *permit,* the applicant shall first file an application therefor in writing on a form furnished by the department of building safety for that purpose. Such application shall:

1. Identify and describe the work to be covered by the *permit* for which application is made.
2. Describe the land on which the proposed work is to be done by legal description, street address or similar description that will readily identify and definitely locate the proposed building or work.
3. Indicate the use and occupancy for which the proposed work is intended.
4. Be accompanied by *construction documents* and other information as required in Section R106.1.
5. State the valuation of the proposed work.
6. Be signed by the applicant or the applicant's authorized agent.
7. Give such other data and information as required by the *building official.*

R105.3.1 Action on application. The *building official* shall examine or cause to be examined applications for *permits* and amendments thereto within a reasonable time after filing. If the application or the *construction documents* do not conform to the requirements of pertinent laws, the *building official* shall reject such application in writing stating the reasons therefor. If the *building official* is satisfied that the proposed work conforms to the requirements of this code and laws and ordinances applicable thereto, the *building official* shall issue a *permit* therefor as soon as practicable.

R105.3.1.1 Determination of substantially improved or substantially damaged existing buildings in flood hazard areas. For applications for reconstruction, rehabilitation, *addition,* alteration, repair or other improvement of existing buildings or structures located in a flood hazard area as established by Table R301.2(1), the *building official* shall examine or cause to be examined the *construction documents* and shall make a determination with regard to the value of the proposed work. For buildings that have sustained damage of any origin, the value of the proposed work shall include the cost to repair the building or structure to its predamaged condition. If the *building official* finds that the value of proposed work equals or exceeds 50 percent of the market value of the building or structure before the damage has occurred or the improvement is started, the proposed work is a substantial improvement or restoration of substantial damage and the building official shall require existing portions of the entire building or structure to meet the requirements of Section R322.

For the purpose of this determination, a substantial improvement shall mean any repair, reconstruction, rehabilitation, addition or improvement of a building or structure, the cost of which equals or exceeds 50 percent of the market value of the building or structure before the improvement or repair is started. Where the building or structure has sustained substantial damage, repairs necessary to restore the building or structure to its predamaged condition shall be considered substantial improvements regardless of the actual repair work performed. The term shall not include either of the following:

1. Improvements to a building or structure that are required to correct existing health, sanitary or safety code violations identified by the building official and that are the minimum necessary to ensure safe living conditions.
2. Any alteration of a historic building or structure, provided that the alteration will not preclude the continued designation as a historic building or structure. For the purposes of this exclusion, a historic building shall be any of the following:
   - 2.1. Listed or preliminarily determined to be eligible for listing in the National Register of Historic Places.
   - 2.2. Determined by the Secretary of the U.S. Department of Interior as contributing to the historical significance of a registered historic district or a district preliminarily determined to qualify as an historic district.
   - 2.3. Designated as historic under a state or local historic preservation program that is approved by the Department of Interior.

R105.3.2 Time limitation of application. An application for a *permit* for any proposed work shall be deemed to have been abandoned 180 days after the date of filing unless such application has been pursued in good faith or a *permit* has been issued; except that the *building official* is authorized to grant one or more extensions of time for additional periods not exceeding 180 days each. The extension shall be requested in writing and justifiable cause demonstrated.

R105.4 Validity of permit. The issuance or granting of a *permit* shall not be construed to be a *permit* for, or an *approval* of, any violation of any of the provisions of this code or of any other ordinance of the *jurisdiction. Permits* presuming to give authority to violate or cancel the provisions of this code or other ordinances of the *jurisdiction* shall not be valid. The issuance of a *permit* based on *construction documents* and other data shall not prevent the *building official* from requiring the correction of errors in the *construction documents* and other data. The *building official* is authorized to prevent occupancy or use of a structure where in violation of this code or of any other ordinances of this *jurisdiction.*

R105.5 Expiration. Every *permit* issued shall become invalid unless the work authorized by such *permit* is commenced within 180 days after its issuance, or if the work authorized by such *permit* is suspended or abandoned for a period of 180 days after the time the work is commenced. The *building official* is authorized to grant, in writing, one or more extensions of time, for periods not more than 180 days each. The extension shall be requested in writing and justifiable cause demonstrated.

R105.6 Suspension or revocation. The *building official* is authorized to suspend or revoke a *permit* issued under the provisions of this code wherever the *permit* is issued in error or on the basis of incorrect, inaccurate or incomplete information, or in violation of any ordinance or regulation or any of the provisions of this code.

R105.7 Placement of permit. The building *permit* or a copy shall be kept on the site of the work until the completion of the project.

R105.8 Responsibility. It shall be the duty of every person who performs work for the installation or repair of building, structure, electrical, gas, mechanical or plumbing systems, for which this code is applicable, to comply with this code.

R105.9 Preliminary inspection. Before issuing a *permit,* the *building official* is authorized to examine or cause to be examined buildings, structures and sites for which an application has been filed.

SECTION R106
CONSTRUCTION DOCUMENTS

R106.1 Submittal documents. Submittal documents consisting of *construction documents,* and other data shall be submitted in two or more sets with each application for a *permit.* The *construction documents* shall be prepared by a registered *design professional* where required by the statutes of the *jurisdiction* in which the project is to be constructed. Where special conditions exist, the *building official* is authorized to require additional *construction documents* to be prepared by a registered *design professional.*

Exception: The *building official* is authorized to waive the submission of *construction documents* and other data not

required to be prepared by a registered *design professional* if it is found that the nature of the work applied for is such that reviewing of *construction documents* is not necessary to obtain compliance with this code.

R106.1.1 Information on construction documents. *Construction documents* shall be drawn upon suitable material. Electronic media documents are permitted to be submitted where *approved* by the *building official*. *Construction documents* shall be of sufficient clarity to indicate the location, nature and extent of the work proposed and show in detail that it will conform to the provisions of this code and relevant laws, ordinances, rules and regulations, as determined by the *building official*.

*

R106.1.2 Manufacturer's installation instructions. Manufacturer's installation instructions, as required by this code, shall be available on the job site at the time of inspection.

**

R106.1.3 Information on braced wall design. For buildings and structures utilizing braced wall design, and where required by the *building official*, braced wall lines shall be identified on the *construction documents*. Pertinent information including, but not limited to, bracing methods, location and length of *braced wall panels* and foundation requirements of braced wall panels at top and bottom shall be provided.

R106.1.4 Information for construction in flood hazard areas. For buildings and structures located in whole or in part in flood hazard areas as established by Table R301.2(1), *construction documents* shall include:

1. Delineation of flood hazard areas, floodway boundaries and flood zones and the design flood elevation, as appropriate.
2. The elevation of the proposed lowest floor, including *basement*; in areas of shallow flooding (AO Zones), the height of the proposed lowest floor, including *basement*, above the highest adjacent *grade*.
3. The elevation of the bottom of the lowest horizontal structural member in coastal high hazard areas (V Zone) and in Coastal A Zones where such zones are delineated on flood hazard maps identified in Table R301.2(1) or otherwise delineated by the jurisdiction.
4. If design flood elevations are not included on the community's Flood Insurance Rate Map (FIRM), the *building official* and the applicant shall obtain and reasonably utilize any design flood elevation and floodway data available from other sources.

R106.2 Site plan or plot plan. The *construction documents* submitted with the application for *permit* shall be accompanied by a site plan showing the size and location of new construction and existing structures on the site and distances from *lot lines*. In the case of demolition, the site plan shall show construction to be demolished and the location and size of existing structures and construction that are to remain on the site or plot. The *building official* is authorized to waive or modify the requirement for a site plan where the application for *permit* is for *alteration* or repair or where otherwise warranted.

R106.3 Examination of documents. The *building official* shall examine or cause to be examined *construction documents* for code compliance.

R106.3.1 Approval of construction documents. Where the *building official* issues a *permit*, the *construction documents* shall be *approved* in writing or by a stamp that states "REVIEWED FOR CODE COMPLIANCE." One set of *construction documents* so reviewed shall be retained by the *building official*. The other set shall be returned to the applicant, shall be kept at the site of work and shall be open to inspection by the *building official* or a duly authorized representative.

R106.3.2 Previous approvals. This code shall not require changes in the *construction documents*, construction or designated occupancy of a structure for which a lawful *permit* has been heretofore issued or otherwise lawfully authorized, and the construction of which has been pursued in good faith within 180 days after the effective date of this code and has not been abandoned.

R106.3.3 Phased approval. The *building official* is authorized to issue a *permit* for the construction of foundations or any other part of a building or structure before the *construction documents* for the whole building or structure have been submitted, provided that adequate information and detailed statements have been filed complying with pertinent requirements of this code. The holder of such *permit* for the foundation or other parts of a building or structure shall proceed at the holder's own risk with the building operation and without assurance that a *permit* for the entire structure will be granted.

R106.4 Amended construction documents. Work shall be installed in accordance with the *approved construction documents*, and any changes made during construction that are not in compliance with the *approved construction documents* shall be resubmitted for approval as an amended set of *construction documents*.

R106.5 Retention of construction documents. One set of *approved construction documents* shall be retained by the *building official* for a period of not less than 180 days from date of completion of the permitted work, or as required by state or local laws.

SECTION R107
TEMPORARY STRUCTURES AND USES

R107.1 General. The *building official* is authorized to issue a *permit* for temporary structures and temporary uses. Such *permits* shall be limited as to time of service, but shall not be permitted for more than 180 days. The *building official* is authorized to grant extensions for demonstrated cause.

R107.2 Conformance. Temporary structures and uses shall conform to the structural strength, fire safety, means of egress, light, ventilation and sanitary requirements of this code as necessary to ensure the public health, safety and general welfare.

R107.3 Temporary power. The *building official* is authorized to give permission to temporarily supply and use power in part of an electric installation before such installation has been fully completed and the final certificate of completion has been issued. The part covered by the temporary certificate shall comply with the requirements specified for temporary lighting, heat or power in NFPA 70.

R107.4 Termination of approval. The *building official* is authorized to terminate such *permit* for a temporary structure or use and to order the temporary structure or use to be discontinued.

SECTION R108
FEES

R108.1 Payment of fees. A *permit* shall not be valid until the fees prescribed by law have been paid, nor shall an amendment to a *permit* be released until the additional fee, if any, has been paid.

R108.2 Schedule of permit fees. On buildings, structures, electrical, gas, mechanical and plumbing systems or *alterations* requiring a *permit*, a fee for each *permit* shall be paid as required, in accordance with the schedule as established by the applicable governing authority.

R108.3 Building permit valuations. Building *permit* valuation shall include total value of the work for which a *permit* is being issued, such as electrical, gas, mechanical, plumbing *equipment* and other permanent systems, including materials and labor.

R108.4 Related fees. The payment of the fee for the construction, *alteration*, removal or demolition for work done in connection to or concurrently with the work authorized by a building *permit* shall not relieve the applicant or holder of the *permit* from the payment of other fees that are prescribed by law.

R108.5 Refunds. The *building official* is authorized to establish a refund policy.

R108.6 Work commencing before permit issuance. Any person who commences work requiring a *permit* on a building, structure, electrical, gas, mechanical or plumbing system before obtaining the necessary permits shall be subject to a fee established by the applicable governing authority that shall be in addition to the required *permit* fees.

SECTION R109
INSPECTIONS

R109.1 Types of inspections. For on-site construction, from time to time the *building official*, upon notification from the *permit* holder or his agent, shall make or cause to be made any necessary inspections and shall either approve that portion of the construction as completed or shall notify the *permit* holder or his or her agent wherein the same fails to comply with this code.

R109.1.1 Foundation inspection. Inspection of the foundation shall be made after poles or piers are set or trenches or *basement* areas are excavated and any required forms erected and any required reinforcing steel is in place and supported prior to the placing of concrete. The foundation inspection shall include excavations for thickened slabs intended for the support of bearing walls, partitions, structural supports, or *equipment* and special requirements for wood foundations.

R109.1.2 Plumbing, mechanical, gas and electrical systems inspection. Rough inspection of plumbing, mechanical, gas and electrical systems shall be made prior to covering or concealment, before fixtures or *appliances* are set or installed, and prior to framing inspection.

Exception: Backfilling of ground-source heat pump loop systems tested in accordance with Section M2105.1 prior to inspection shall be permitted.

R109.1.3 Floodplain inspections. For construction in flood hazard areas as established by Table R301.2(1), upon placement of the lowest floor, including *basement*, and prior to further vertical construction, the *building official* shall require submission of documentation, prepared and sealed by a registered *design professional*, of the elevation of the lowest floor, including *basement*, required in Section R322.

R109.1.4 Frame and masonry inspection. Inspection of framing and masonry construction shall be made after the roof, masonry, framing, firestopping, draftstopping and bracing are in place and after the plumbing, mechanical and electrical rough inspections are *approved*.

R109.1.5 Other inspections. In addition to inspections in Sections R109.1.1 through R109.1.4, the *building official* shall have the authority to make or require any other inspections to ascertain compliance with this code and other laws enforced by the *building official*.

R109.1.5.1 Fire-resistance-rated construction inspection. Where fire-resistance-rated construction is required between *dwelling units* or due to location on property, the *building official* shall require an inspection of such construction after lathing or gypsum board or gypsum panel products are in place, but before any plaster is applied, or before board or panel joints and fasteners are taped and finished.

R109.1.6 Final inspection. Final inspection shall be made after the permitted work is complete and prior to occupancy.

R109.1.6.1 Elevation documentation. If located in a flood hazard area, the documentation of elevations required in Section R322.1.10 shall be submitted to the *building official* prior to the final inspection.

R109.2 Inspection agencies. The *building official* is authorized to accept reports of *approved* agencies, provided such agencies satisfy the requirements as to qualifications and reliability.

R109.3 Inspection requests. It shall be the duty of the *permit* holder or their agent to notify the *building official* that such work is ready for inspection. It shall be the duty of the person requesting any inspections required by this code to provide access to and means for inspection of such work.

R109.4 Approval required. Work shall not be done beyond the point indicated in each successive inspection without first obtaining the approval of the *building official*. The *building official* upon notification, shall make the requested inspections and shall either indicate the portion of the construction that is satisfactory as completed, or shall notify the *permit* holder or an agent of the *permit* holder wherein the same fails to comply with this code. Any portions that do not comply shall be corrected and such portion shall not be covered or concealed until authorized by the *building official*.

SECTION R110
CERTIFICATE OF OCCUPANCY

R110.1 Use and occupancy. A building or structure shall not be used or occupied, and a change in the existing use or occupancy classification of a building or structure or portion thereof shall not be made, until the *building official* has issued a certificate of occupancy therefor as provided herein. Issuance of a certificate of occupancy shall not be construed as an approval of a violation of the provisions of this code or of other ordinances of the *jurisdiction*. Certificates presuming to give authority to violate or cancel the provisions of this code or other ordinances of the *jurisdiction* shall not be valid.

Exceptions:

1. Certificates of occupancy are not required for work exempt from permits under Section R105.2.
2. Accessory buildings or structures.

R110.2 Change in use. Changes in the character or use of an existing structure shall not be made except as specified in Sections 3408 and 3409 of the *International Building Code*.

R110.3 Certificate issued. After the *building official* inspects the building or structure and does not find violations of the provisions of this code or other laws that are enforced by the department of building safety, the *building official* shall issue a certificate of occupancy containing the following:

1. The building *permit* number.
2. The address of the structure.
3. The name and address of the owner or the owner's authorized agent.
4. A description of that portion of the structure for which the certificate is issued.
5. A statement that the described portion of the structure has been inspected for compliance with the requirements of this code.
6. The name of the *building official*.
7. The edition of the code under which the *permit* was issued.
8. If an automatic sprinkler system is provided and whether the sprinkler system is required.
9. Any special stipulations and conditions of the building *permit*.

R110.4 Temporary occupancy. The *building official* is authorized to issue a temporary certificate of occupancy before the completion of the entire work covered by the *permit*, provided that such portion or portions shall be occupied safely. The *building official* shall set a time period during which the temporary certificate of occupancy is valid.

R110.5 Revocation. The *building official* shall, in writing, suspend or revoke a certificate of occupancy issued under the provisions of this code wherever the certificate is issued in error, or on the basis of incorrect information supplied, or where it is determined that the building or structure or portion thereof is in violation of any ordinance or regulation or any of the provisions of this code.

SECTION R111
SERVICE UTILITIES

R111.1 Connection of service utilities. A person shall not make connections from a utility, source of energy, fuel or power to any building or system that is regulated by this code for which a *permit* is required, until *approved* by the *building official*.

R111.2 Temporary connection. The *building official* shall have the authority to authorize the temporary connection of the building or system to the utility, source of energy, fuel or power.

R111.3 Authority to disconnect service utilities. The *building official* shall have the authority to authorize disconnection of utility service to the building, structure or system regulated by this code and the referenced codes and standards set forth in Section R102.4 in case of emergency where necessary to eliminate an immediate hazard to life or property or where such utility connection has been made without the approval required by Section R111.1 or R111.2. The *building official* shall notify the serving utility and where possible the owner or the owner's authorized agent and occupant of the building, structure or service system of the decision to disconnect prior to taking such action. If not notified prior to disconnection, the owner, the owner's authorized agent or occupant of the building, structure or service system shall be notified in writing as soon as practical thereafter.

SECTION R112
BOARD OF APPEALS

R112.1 General. In order to hear and decide appeals of orders, decisions or determinations made by the *building official* relative to the application and interpretation of this code, there shall be and is hereby created a board of appeals. The *building official* shall be an ex officio member of said board but shall not have a vote on any matter before the board. The board of appeals shall be appointed by the governing body and shall hold office at its pleasure. The board shall adopt rules of procedure for conducting its business, and shall render decisions and findings in writing to the appellant with a duplicate copy to the *building official*.

R112.2 Limitations on authority. An application for appeal shall be based on a claim that the true intent of this code or the rules legally adopted thereunder have been incorrectly interpreted, the provisions of this code do not fully apply or

an equally good or better form of construction is proposed. The board shall not have authority to waive requirements of this code.

R112.3 Qualifications. The board of appeals shall consist of members who are qualified by experience and training to pass judgement on matters pertaining to building construction and are not employees of the *jurisdiction*.

R112.4 Administration. The *building official* shall take immediate action in accordance with the decision of the board.

SECTION R113
VIOLATIONS

R113.1 Unlawful acts. It shall be unlawful for any person, firm or corporation to erect, construct, alter, extend, repair, move, remove, demolish or occupy any building, structure or *equipment* regulated by this code, or cause same to be done, in conflict with or in violation of any of the provisions of this code.

R113.2 Notice of violation. The *building official* is authorized to serve a notice of violation or order on the person responsible for the erection, construction, *alteration*, extension, repair, moving, removal, demolition or occupancy of a building or structure in violation of the provisions of this code, or in violation of a detail statement or a plan *approved* thereunder, or in violation of a *permit* or certificate issued under the provisions of this code. Such order shall direct the discontinuance of the illegal action or condition and the abatement of the violation.

R113.3 Prosecution of violation. If the notice of violation is not complied with in the time prescribed by such notice, the *building official* is authorized to request the legal counsel of the *jurisdiction* to institute the appropriate proceeding at law or in equity to restrain, correct or abate such violation, or to require the removal or termination of the unlawful occupancy of the building or structure in violation of the provisions of this code or of the order or direction made pursuant thereto.

R113.4 Violation penalties. Any person who violates a provision of this code or fails to comply with any of the requirements thereof or who erects, constructs, alters or repairs a building or structure in violation of the *approved construction documents* or directive of the *building official,* or of a *permit* or certificate issued under the provisions of this code, shall be subject to penalties as prescribed by law.

SECTION R114
STOP WORK ORDER

R114.1 Notice to owner or the owner's authorized agent. Upon notice from the *building official* that work on any building or structure is being executed contrary to the provisions of this code or in an unsafe and dangerous manner, such work shall be immediately stopped. The stop work order shall be in writing and shall be given to the owner of the property involved, or to the owner's authorized agent or to the person performing the work and shall state the conditions under which work will be permitted to resume.

R114.2 Unlawful continuance. Any person who shall continue any work in or about the structure after having been served with a stop work order, except such work as that person is directed to perform to remove a violation or unsafe condition, shall be subject to penalties as prescribed by law.

Part II—Definitions

CHAPTER 2

DEFINITIONS

Code change proposals to definitions in this chapter preceded by a bracketed letter are considered by the IRC-Building Code Development Committee [RB] or the IECC-Residential Code Development Committee [RE] during the Group B (2016) Code Development cycle. See page xvii for explanation.

SECTION R201
GENERAL

R201.1 Scope. Unless otherwise expressly stated, the following words and terms shall, for the purposes of this code, have the meanings indicated in this chapter.

R201.2 Interchangeability. Words used in the present tense include the future; words in the masculine gender include the feminine and neuter; the singular number includes the plural and the plural, the singular.

R201.3 Terms defined in other codes. Where terms are not defined in this code such terms shall have the meanings ascribed in other code publications of the International Code Council.

R201.4 Terms not defined. Where terms are not defined through the methods authorized by this section, such terms shall have ordinarily accepted meanings such as the context implies.

SECTION R202
DEFINITIONS

ACCESSIBLE. Signifies access that requires the removal of an access panel or similar removable obstruction.

ACCESSIBLE, READILY. Signifies access without the necessity for removing a panel or similar obstruction.

[RB] ACCESSORY STRUCTURE. A structure that is accessory to and incidental to that of the *dwelling(s)* and that is located on the same *lot.*

[RB] ADDITION. An extension or increase in floor area or height of a building or structure.

[RB] ADHERED STONE OR MASONRY VENEER. Stone or masonry veneer secured and supported through the adhesion of an *approved* bonding material applied to an *approved* backing.

AIR ADMITTANCE VALVE. A one-way valve designed to allow air into the plumbing drainage system where a negative pressure develops in the piping. This device shall close by gravity and seal the terminal under conditions of zero differential pressure (no flow conditions) and under positive internal pressure.

AIR BARRIER. See Section N1101.6 for definition applicable in Chapter 11.

AIR BREAK (DRAINAGE SYSTEM). An arrangement where a discharge pipe from a fixture, *appliance* or device drains indirectly into a receptor below the flood-level rim of the receptor and above the trap seal.

AIR CIRCULATION, FORCED. A means of providing space conditioning utilizing movement of air through ducts or plenums by mechanical means.

AIR-CONDITIONING SYSTEM. A system that consists of heat exchangers, blowers, filters, supply, exhaust and return-air systems, and shall include any apparatus installed in connection therewith.

AIR GAP, DRAINAGE SYSTEM. The unobstructed vertical distance through free atmosphere between the outlet of a waste pipe and the flood-level rim of the fixture or receptor into which it is discharging.

AIR GAP, WATER-DISTRIBUTION SYSTEM. The unobstructed vertical distance through free atmosphere between the lowest opening from a water supply discharge to the flood-level rim of a plumbing fixture.

[RB] AIR-IMPERMEABLE INSULATION. An insulation having an air permanence equal to or less than 0.02 L/s-m^2 at 75 Pa pressure differential as tested in accordance with ASTM E 2178 or E 283.

[RB] ALTERATION. Any construction, retrofit or renovation to an existing structure other than repair or addition that requires a permit. Also, a change in a building, electrical, gas, mechanical or plumbing system that involves an extension, addition or change to the arrangement, type or purpose of the original installation that requires a permit.

[RB] ALTERNATING TREAD DEVICE. A device that has a series of steps between 50 and 70 degrees (0.87 and 1.22 rad) from horizontal, usually attached to a center support rail in an alternating manner so that the user does not have both feet on the same level at the same time.

[RB] ANCHORED STONE OR MASONRY VENEER. Stone or masonry veneer secured with *approved* mechanical fasteners to an *approved* backing.

ANCHORS. See "Supports."

ANTISIPHON. A term applied to valves or mechanical devices that eliminate siphonage.

APPLIANCE. A device or apparatus that is manufactured and designed to utilize energy and for which this code provides specific requirements.

[RB] APPROVED. Acceptable to the *building official.*

[RB] APPROVED AGENCY. An established and recognized agency that is regularly engaged in conducting tests or furnishing inspection services, where such agency has been *approved* by the building official.

[RB] ASPECT RATIO. The ratio of longest to shortest perpendicular dimensions, or for wall sections, the ratio of height to length.

[RB] ATTIC. The unfinished space between the ceiling assembly and the roof assembly.

[RB] ATTIC, HABITABLE. A finished or unfinished area, not considered a *story*, complying with all of the following requirements:

1. The occupiable floor area is not less than 70 square feet (17 m^2), in accordance with Section R304.
2. The occupiable floor area has a ceiling height in accordance with Section R305.
3. The occupiable space is enclosed by the roof assembly above, knee walls (if applicable) on the sides and the floor-ceiling assembly below.

BACKFLOW, DRAINAGE. A reversal of flow in the drainage system.

BACKFLOW PREVENTER. A backflow prevention assembly, a backflow prevention device or other means or method to prevent backflow into the potable water supply.

BACKFLOW PREVENTER, REDUCED-PRESSURE-ZONE TYPE. A backflow-prevention device consisting of two independently acting check valves, internally force loaded to a normally closed position and separated by an intermediate chamber (or zone) in which there is an automatic relief means of venting to atmosphere internally loaded to a normally open position between two tightly closing shut-off valves and with means for testing for tightness of the checks and opening of relief means.

BACKFLOW, WATER DISTRIBUTION. The flow of water or other liquids into the potable water-supply piping from any sources other than its intended source. Backsiphonage is one type of backflow.

BACKPRESSURE. Pressure created by any means in the water distribution system that by being in excess of the pressure in the water supply mains causes a potential backflow condition.

BACKPRESSURE, LOW HEAD. A pressure less than or equal to 4.33 psi (29.88 kPa) or the pressure exerted by a 10-foot (3048 mm) column of water.

BACKSIPHONAGE. The flowing back of used or contaminated water from piping into a potable water-supply pipe due to a negative pressure in such pipe.

BACKWATER VALVE. A device installed in a drain or pipe to prevent backflow of sewage.

[RB] BASEMENT. A *story* that is not a *story above grade plane.* (see "Story above grade plane").

[RB] BASEMENT WALL. The opaque portion of a wall that encloses one side of a *basement* and has an average below *grade* wall area that is 50 percent or more of the total opaque and nonopaque area of that enclosing side.

[RB] BASIC WIND SPEED. Three-second gust speed at 33 feet (10 058 mm) above the ground in Exposure C (see Section R301.2.1) as given in Figure R301.2(4)A.

BATHROOM GROUP. A group of fixtures, including or excluding a bidet, consisting of a water closet, lavatory, and bathtub or shower. Such fixtures are located together on the same floor level.

BEND. A drainage fitting, designed to provide a change in direction of a drain pipe of less than the angle specified by the amount necessary to establish the desired slope of the line (see "Elbow" and "Sweep").

BOILER. A self-contained *appliance* from which hot water is circulated for heating purposes and then returned to the boiler, and that operates at water pressures not exceeding 160 pounds per square inch gage (psig) (1102 kPa gauge) and at water temperatures not exceeding 250°F (121°C).

[RB] BOND BEAM. A horizontal grouted element within masonry in which reinforcement is embedded.

[RB] BRACED WALL LINE. A straight line through the building plan that represents the location of the lateral resistance provided by the wall bracing.

[RB] BRACED WALL LINE, CONTINUOUSLY SHEATHED. A *braced wall line* with structural sheathing applied to all sheathable surfaces including the areas above and below openings.

[RB] BRACED WALL PANEL. A full-height section of wall constructed to resist in-plane shear loads through interaction of framing members, sheathing material and anchors. The panel's length meets the requirements of its particular bracing method, and contributes toward the total amount of bracing required along its *braced wall line* in accordance with Section R602.10.1.

BRANCH. Any part of the piping system other than a riser, main or stack.

BRANCH, FIXTURE. See "Fixture branch, drainage."

BRANCH, HORIZONTAL. See "Horizontal branch, drainage."

BRANCH INTERVAL. A vertical measurement of distance, 8 feet (2438 mm) or more in *developed length,* between the connections of horizontal branches to a drainage stack. Measurements are taken down the stack from the highest horizontal branch connection.

BRANCH, MAIN. A water-distribution pipe that extends horizontally off a main or riser to convey water to branches or fixture groups.

BRANCH, VENT. A vent connecting two or more individual vents with a vent stack or stack vent.

BTU/H. The *listed* maximum capacity of an *appliance*, absorption unit or burner expressed in British thermal units input per hour.

[RB] BUILDING. Building shall mean any one- and two-family dwelling or portion thereof, including *townhouses*, that is used, or designed or intended to be used for human habitation, for living, sleeping, cooking or eating purposes, or any combination thereof, and shall include *accessory structures* thereto.

BUILDING DRAIN. The lowest piping that collects the discharge from all other drainage piping inside the house and extends 30 inches (762 mm) in *developed length* of pipe, beyond the *exterior walls* and conveys the drainage to the *building sewer*.

[RB] BUILDING, EXISTING. Existing building is a building erected prior to the adoption of this code, or one for which a legal building *permit* has been issued.

[RB] BUILDING-INTEGRATED PHOTOVOLTAIC PRODUCT. A building product that incorporates photovoltaic modules and functions as a component of the building envelope.

[RB] BUILDING LINE. The line established by law, beyond which a building shall not extend, except as specifically provided by law.

[RB] BUILDING OFFICIAL. The officer or other designated authority charged with the administration and enforcement of this code.

BUILDING SEWER. That part of the drainage system that extends from the end of the *building drain* and conveys its discharge to a public sewer, private sewer, individual sewage-disposal system or other point of disposal.

[RE] BUILDING THERMAL ENVELOPE. The *basement walls*, *exterior walls*, floor, roof and any other building element that enclose *conditioned spaces*.

[RB] BUILT-UP ROOF COVERING. Two or more layers of felt cemented together and surfaced with a cap sheet, mineral aggregate, smooth coating or similar surfacing material.

[RB] CAP PLATE. The top plate of the double top plates used in structural insulated panel (SIP) construction. The cap plate is cut to match the panel thickness such that it overlaps the wood structural panel facing on both sides.

[RB] CEILING HEIGHT. The clear vertical distance from the finished floor to the finished ceiling.

[RB] CEMENT PLASTER. A mixture of portland or blended cement, portland cement or blended cement and hydrated lime, masonry cement or plastic cement and aggregate and other *approved* materials as specified in this code.

[RB] CHIMNEY. A primary vertical structure containing one or more flues, for the purpose of carrying gaseous products of combustion and air from a fuel-burning *appliance* to the outside atmosphere.

CHIMNEY CONNECTOR. A pipe that connects a fuel-burning *appliance* to a chimney.

CHIMNEY TYPES.

Residential-type appliance. An *approved* chimney for removing the products of combustion from fuel-burning, residential-type *appliances* producing combustion gases not in excess of 1,000°F (538°C) under normal operating conditions, and capable of producing combustion gases of 1,400°F (760°C) during intermittent forces firing for periods up to 1 hour. All temperatures shall be measured at the *appliance* flue outlet. Residential-type *appliance* chimneys include masonry and factory-built types.

CIRCUIT VENT. A vent that connects to a horizontal drainage branch and vents two traps to not more than eight traps or trapped fixtures connected into a battery.

CIRCULATING HOT WATER SYSTEM. A specifically designed water distribution system where one or more pumps are operated in the service hot water piping to circulate heated water from the water-heating equipment to fixtures and back to the water-heating equipment.

[RB] CLADDING. The exterior materials that cover the surface of the building envelope that is directly loaded by the wind.

CLEANOUT. An accessible opening in the drainage system used for the removal of possible obstruction.

[RE] CLIMATE ZONE. A geographical region based on climatic criteria as specified in this code.

[RB] CLOSET. A small room or chamber used for storage.

COLLECTION PIPE. Unpressurized pipe used within the collection system that drains on-site nonpotable water or rainwater to a storage tank by gravity.

COMBINATION WASTE AND VENT SYSTEM. A specially designed system of waste piping embodying the horizontal wet venting of one or more sinks, lavatories or floor drains by means of a common waste and vent pipe adequately sized to provide free movement of air above the flow line of the drain.

[RB] COMBUSTIBLE MATERIAL. Any material not defined as noncombustible.

COMBUSTION AIR. The air provided to fuel-burning *equipment* including air for fuel combustion, draft hood dilution and ventilation of the *equipment* enclosure.

[CE] COMMERCIAL, BUILDING. See Section N1101.6.

COMMON VENT. A single pipe venting two trap arms within the same *branch interval*, either back-to-back or one above the other.

CONDENSATE. The liquid that separates from a gas due to a reduction in temperature; for example, water that condenses from flue gases and water that condenses from air circulating through the cooling coil in air conditioning *equipment*.

CONDENSING APPLIANCE. An *appliance* that condenses water generated by the burning of fuels.

[RB] CONDITIONED AIR. Air treated to control its temperature, relative humidity or quality.

[RE] CONDITIONED AREA. That area within a building provided with heating or cooling systems or *appliances* capable of maintaining, through design or heat loss or gain, 68°F (20°C) during the heating season or 80°F (27°C) during the cooling season, or has a fixed opening directly adjacent to a conditioned area.

[RE] CONDITIONED FLOOR AREA. The horizontal projection of the floors associated with the *conditioned space*.

[RE] CONDITIONED SPACE. An area, room or space that is enclosed within the building thermal envelope and that is directly heated or cooled or that is indirectly heated or cooled. Spaces are indirectly heated or cooled where they communicate thru openings with conditioned spaces, where they are separated from conditioned spaces by uninsulated walls, floors or ceilings or where they contain uninsulated ducts, piping or other sources of heating or cooling.

[RB] CONSTRUCTION DOCUMENTS. Written, graphic and pictorial documents prepared or assembled for describing the design, location and physical characteristics of the elements of a project necessary for obtaining a building *permit*. Construction drawings shall be drawn to an appropriate scale.

CONTAMINATION. A high hazard or health hazard impairment of the quality of the potable water that creates an actual hazard to the public health through poisoning or through the spread of disease by sewage, industrial fluids or waste.

[RE] CONTINUOUS INSULATION (ci). Insulating material that is continuous across all structural members without thermal bridges other than fasteners and service openings. It is installed on the interior or exterior or is integral to any opaque surface of the building envelope.

CONTINUOUS WASTE. A drain from two or more similar adjacent fixtures connected to a single trap.

CONTROL, LIMIT. An automatic control responsive to changes in liquid flow or level, pressure, or temperature for limiting the operation of an *appliance*.

CONTROL, PRIMARY SAFETY. A safety control responsive directly to flame properties that senses the presence or absence of flame and, in event of ignition failure or unintentional flame extinguishment, automatically causes shutdown of mechanical *equipment*.

CONVECTOR. A system-incorporating heating element in an enclosure in which air enters an opening below the heating element, is heated and leaves the enclosure through an opening located above the heating element.

CORE. The lightweight middle section of a structural insulated panel, composed of foam plastic insulation that provides the link between the two facing shells.

[RB] CORROSION RESISTANCE. The ability of a material to withstand deterioration of its surface or its properties where exposed to its environment.

[RB] COURT. A space, open and unobstructed to the sky, located at or above *grade* level on a *lot* and bounded on three or more sides by walls or a building.

[RB] CRIPPLE WALL. A framed wall extending from the top of the foundation to the underside of the floor framing of the first *story above grade plane*.

CROSS CONNECTION. Any connection between two otherwise separate piping systems that allows a flow from one system to the other.

[RB] CROSS-LAMINATED TIMBER. A prefabricated engineered wood product consisting of not less than three layers of solid-sawn lumber or *structural composite lumber* where the adjacent layers are cross-oriented and bonded with structural adhesive to form a solid wood element.

[RE] CURTAIN WALL. See Section N1101.6 for definition applicable in Chapter 11.

[RB] DALLE GLASS. A decorative composite glazing material made of individual pieces of glass that are embedded in a cast matrix of concrete or epoxy.

DAMPER, VOLUME. A device that will restrict, retard or direct the flow of air in any duct, or the products of combustion of heat-producing *equipment*, vent connector, vent or chimney.

[RB] DEAD LOADS. The weight of the materials of construction incorporated into the building, including but not limited to walls, floors, roofs, ceilings, stairways, built-in partitions, finishes, cladding, and other similarly incorporated architectural and structural items, and fixed service *equipment*.

[RB] DECORATIVE GLASS. A carved, leaded or Dalle glass or glazing material with a purpose that is decorative or artistic, not functional; with coloring, texture or other design qualities or components that cannot be removed without destroying the glazing material; and with a surface, or assembly into which it is incorporated, that is divided into segments.

[RE] DEMAND RECIRCULATION WATER SYSTEM. See Section N1101.6 for definition applicable in Chapter 11.

DESIGN PROFESSIONAL. See "*Registered design professional.*"

DEVELOPED LENGTH. The length of a pipeline measured along the center line of the pipe and fittings.

DIAMETER. Unless specifically stated, the term "diameter" is the nominal diameter as designated by the *approved* material standard.

[RB] DIAPHRAGM. A horizontal or nearly horizontal system acting to transmit lateral forces to the vertical resisting elements. Where the term "*diaphragm*" is used, it includes horizontal bracing systems.

DILUTION AIR. Air that enters a draft hood or draft regulator and mixes with flue gases.

DIRECT SYSTEM. A solar thermal system in which the gas or liquid in the solar collector loop is not separated from the load.

DIRECT-VENT APPLIANCE. A fuel-burning *appliance* with a sealed combustion system that draws all air for combustion from the outside atmosphere and discharges all flue gases to the outside atmosphere.

DRAFT. The pressure difference existing between the *appliance* or any component part and the atmosphere, that causes a continuous flow of air and products of combustion through the gas passages of the *appliance* to the atmosphere.

Induced draft. The pressure difference created by the action of a fan, blower or ejector, that is located between the *appliance* and the chimney or vent termination.

Natural draft. The pressure difference created by a vent or chimney because of its height, and the temperature difference between the flue gases and the atmosphere.

DRAFT HOOD. A device built into an *appliance*, or a part of the vent connector from an *appliance*, that is designed to provide for the ready escape of the flue gases from the *appliance* in the event of no draft, backdraft or stoppage beyond the draft hood; prevent a backdraft from entering the *appliance*; and neutralize the effect of stack action of the chimney or gas vent on the operation of the *appliance*.

DRAFT REGULATOR. A device that functions to maintain a desired draft in the *appliance* by automatically reducing the draft to the desired value.

[RB] DRAFT STOP. A material, device or construction installed to restrict the movement of air within open spaces of concealed areas of building components such as crawl spaces, floor-ceiling assemblies, roof-ceiling assemblies and *attics*.

DRAIN. Any pipe that carries soil and water-borne wastes in a building drainage system.

DRAIN-BACK SYSTEM. A solar thermal system in which the fluid in the solar collector loop is drained from the collector into a holding tank under prescribed circumstances.

DRAINAGE FITTING. A pipe fitting designed to provide connections in the drainage system that have provisions for establishing the desired slope in the system. These fittings are made from a variety of both metals and plastics. The methods of coupling provide for required slope in the system.

DUCT SYSTEM. A continuous passageway for the transmission of air that, in addition to ducts, includes duct fittings, dampers, plenums, fans and accessory air-handling *equipment* and *appliances*.

For definition applicable in Chapter 11, see Section N1101.6.

[RB] DWELLING. Any building that contains one or two *dwelling units* used, intended, or designed to be built, used, rented, leased, let or hired out to be occupied, or that are occupied for living purposes.

[RB] DWELLING UNIT. A single unit providing complete independent living facilities for one or more persons, including permanent provisions for living, sleeping, eating, cooking and sanitation.

DWV. Abbreviated term for drain, waste and vent piping as used in common plumbing practice.

EFFECTIVE OPENING. The minimum cross-sectional area at the point of water-supply discharge, measured or expressed in terms of diameter of a circle and if the opening is not circular, the diameter of a circle of equivalent cross-sectional area. (This is applicable to air gap.)

ELBOW. A pressure pipe fitting designed to provide an exact change in direction of a pipe run. An elbow provides a sharp turn in the flow path (see "Bend" and "Sweep").

[RB] EMERGENCY ESCAPE AND RESCUE OPENING. An operable exterior window, door or similar device that provides for a means of escape and access for rescue in the event of an emergency.

[RB] ENGINEERED WOOD RIM BOARD. A full-depth structural composite lumber, wood structural panel, structural glued laminated timber or prefabricated wood I-joist member designed to transfer horizontal (shear) and vertical (compression) loads, provide attachment for *diaphragm* sheathing, siding and exterior deck ledgers and provide lateral support at the ends of floor or roof joists or rafters.

EQUIPMENT. Piping, ducts, vents, control devices and other components of systems other than *appliances* that are permanently installed and integrated to provide control of environmental conditions for buildings. This definition shall also include other systems specifically regulated in this code.

EQUIVALENT LENGTH. For determining friction losses in a piping system, the effect of a particular fitting equal to the friction loss through a straight piping length of the same nominal diameter.

[RE] ERI REFERENCE DESIGN. A version of the rated design that meets the minimum requirements of the 2006 *International Energy Conservation Code.*

[RB] ESCARPMENT. With respect to topographic wind effects, a cliff or steep slope generally separating two levels or gently sloping areas.

ESSENTIALLY NONTOXIC TRANSFER FLUIDS. Fluids having a Gosselin rating of 1, including propylene glycol; mineral oil; polydimethy oil oxane; hydrochlorofluorocarbon, chlorofluorocarbon and hydrofluorocarbon refrigerants; and FDA-approved boiler water additives for steam boilers.

ESSENTIALLY TOXIC TRANSFER FLUIDS. Soil, water or gray water and fluids having a Gosselin rating of 2 or more including ethylene glycol, hydrocarbon oils, ammonia refrigerants and hydrazine.

EVAPORATIVE COOLER. A device used for reducing air temperature by the process of evaporating water into an airstream.

EXCESS AIR. Air that passes through the combustion chamber and the *appliance* flue in excess of what is theoretically required for complete combustion.

EXHAUST HOOD, FULL OPENING. An exhaust hood with an opening not less than the diameter of the connecting vent.

EXISTING INSTALLATIONS. Any plumbing system regulated by this code that was legally installed prior to the effective date of this code, or for which a *permit* to install has been issued.

[RB] EXTERIOR INSULATION AND FINISH SYSTEMS (EIFS). EIFS are nonstructural, nonload-bearing *exterior wall* cladding systems that consist of an insulation board attached either adhesively or mechanically, or both, to

the substrate; an integrally reinforced base coat; and a textured protective finish coat.

[RB] EXTERIOR INSULATION AND FINISH SYSTEMS (EIFS) WITH DRAINAGE. An EIFS that incorporates a means of drainage applied over a water-resistive barrier.

[RB] EXTERIOR WALL. An above-*grade* wall that defines the exterior boundaries of a building. Includes between-floor spandrels, peripheral edges of floors, roof and *basement* knee walls, dormer walls, gable end walls, walls enclosing a mansard roof and *basement walls* with an average below-*grade* wall area that is less than 50 percent of the total opaque and nonopaque area of that enclosing side.

[RB] EXTERIOR WALL COVERING. A material or assembly of materials applied on the exterior side of exterior walls for the purpose of providing a weather-resistive barrier, insulation or for aesthetics, including but not limited to, veneers, siding, exterior insulation and finish systems, architectural trim and embellishments such as cornices, soffits, and fascias.

[RB] FACING. The wood structural panel facings that form the two outmost rigid layers of the structural insulated panel.

FACTORY-BUILT CHIMNEY. A *listed* and *labeled* chimney composed of factory-made components assembled in the field in accordance with the manufacturer's instructions and the conditions of the *listing*.

FACTORY-MADE AIR DUCT. A *listed and labeled* duct manufactured in a factory and assembled in the field in accordance with the manufacturer's instructions and conditions of the *listing*.

[RE] FENESTRATION. Skylights, roof windows, vertical windows (whether fixed or moveable); opaque doors; glazed doors; glass block; and combination opaque and glazed doors.

For definition applicable in Chapter 11, see Section N1101.6.

FIBER-CEMENT (BACKERBOARD, SIDING, SOFFIT, TRIM AND UNDERLAYMENT) PRODUCTS. Manufactured thin section composites of hydraulic cementitious matrices and discrete nonasbestos fibers.

FIREBLOCKING. Building materials or materials *approved* for use as fireblocking, installed to resist the free passage of flame to other areas of the building through concealed spaces.

[RB] FIREPLACE. An assembly consisting of a hearth and fire chamber of noncombustible material and provided with a chimney, for use with solid fuels.

Factory-built fireplace. A *listed* and *labeled* fireplace and chimney system composed of factory-made components, and assembled in the field in accordance with manufacturer's instructions and the conditions of the listing.

Masonry fireplace. A field-constructed fireplace composed of *solid masonry* units, bricks, stones or concrete.

FIREPLACE STOVE. A free-standing, chimney-connected solid-fuel-burning heater designed to be operated with the fire chamber doors in either the open or closed position.

[RB] FIREPLACE THROAT. The opening between the top of the firebox and the smoke chamber.

[RB] FIRE-RETARDANT-TREATED WOOD. Pressure-treated lumber and plywood that exhibit reduced surface burning characteristics and resist propagation of fire.

Other means during manufacture. A process where the wood raw material is treated with a fire-retardant formulation while undergoing creation as a finished product.

Pressure process. A process for treating wood using an initial vacuum followed by the introduction of pressure above atmospheric.

[RB] FIRE SEPARATION DISTANCE. The distance measured from the building face to one of the following:

1. To the closest interior *lot line*.
2. To the centerline of a street, an alley or public way.
3. To an imaginary line between two buildings on the *lot*.

The distance shall be measured at a right angle from the face of the wall.

FIXTURE. See "Plumbing fixture."

FIXTURE BRANCH, DRAINAGE. A drain serving two or more fixtures that discharges into another portion of the drainage system.

FIXTURE BRANCH, WATER-SUPPLY. A water-supply pipe between the fixture supply and a main water-distribution pipe or fixture group main.

FIXTURE DRAIN. The drain from the trap of a fixture to the junction of that drain with any other drain pipe.

FIXTURE FITTING.

Supply fitting. A fitting that controls the volume or directional flow or both of water and that is either attached to or accessible from a fixture or is used with an open or atmospheric discharge.

Waste fitting. A combination of components that conveys the sanitary waste from the outlet of a fixture to the connection of the sanitary drainage system.

FIXTURE GROUP, MAIN. The main water-distribution pipe (or secondary branch) serving a plumbing fixture grouping such as a bath, kitchen or laundry area to which two or more individual fixture branch pipes are connected.

FIXTURE SUPPLY. The water-supply pipe connecting a fixture or fixture fitting to a fixture branch.

FIXTURE UNIT, DRAINAGE (d.f.u.). A measure of probable discharge into the drainage system by various types of plumbing fixtures, used to size DWV piping systems. The drainage fixture-unit value for a particular fixture depends on its volume rate of drainage discharge, on the time duration of a single drainage operation and on the average time between successive operations.

FIXTURE UNIT, WATER-SUPPLY (w.s.f.u.). A measure of the probable hydraulic demand on the water supply by various types of plumbing fixtures used to size water-piping systems. The water-supply fixture-unit value for a particular fixture depends on its volume rate of supply, on the time

duration of a single supply operation and on the average time between successive operations.

[RB] FLAME SPREAD. The propagation of flame over a surface.

[RB] FLAME SPREAD INDEX. A comparative measure, expressed as a dimensionless number, derived from visual measurements of the spread of flame versus time for a material tested in accordance with ASTM E 84 or UL 723.

FLEXIBLE AIR CONNECTOR. A conduit for transferring air between an air duct or plenum and an air terminal unit, an air inlet or an air outlet. Such conduit is limited in its use, length and location.

[RB] FLIGHT. A continuous run of rectangular treads or winders or combination thereof from one landing to another.

FLOOD-LEVEL RIM. The edge of the receptor or fixture from which water overflows.

FLOOR DRAIN. A plumbing fixture for recess in the floor having a floor-level strainer intended for the purpose of the collection and disposal of waste water used in cleaning the floor and for the collection and disposal of accidental spillage to the floor.

FLOOR FURNACE. A self-contained furnace suspended from the floor of the space being heated, taking air for combustion from outside such space, and with means for lighting the *appliance* from such space.

FLOW PRESSURE. The static pressure reading in the water-supply pipe near the faucet or water outlet while the faucet or water outlet is open and flowing at capacity.

FLUE. See "Vent."

FLUE, APPLIANCE. The passages within an *appliance* through which combustion products pass from the combustion chamber to the flue collar.

FLUE COLLAR. The portion of a fuel-burning *appliance* designed for the attachment of a draft hood, vent connector or venting system.

FLUE GASES. Products of combustion plus excess air in *appliance* flues or heat exchangers.

FLUSH VALVE. A device located at the bottom of a flush tank that is operated to flush water closets.

FLUSHOMETER TANK. A device integrated within an air accumulator vessel that is designed to discharge a predetermined quantity of water to fixtures for flushing purposes.

FLUSHOMETER VALVE. A flushometer valve is a device that discharges a predetermined quantity of water to fixtures for flushing purposes and is actuated by direct water pressure.

[RB] FOAM BACKER BOARD. Foam plastic used in siding applications where the foam plastic is a component of the siding.

[RB] FOAM PLASTIC INSULATION. A plastic that is intentionally expanded by the use of a foaming agent to produce a reduced-density plastic containing voids consisting of open or closed cells distributed throughout the plastic for thermal insulating or acoustic purposes and that has a density less than 20 pounds per cubic foot (320 kg/m^3) unless it is used as interior trim.

[RB] FOAM PLASTIC INTERIOR TRIM. Exposed foam plastic used as picture molds, chair rails, crown moldings, baseboards, handrails, ceiling beams, door trim and window trim and similar decorative or protective materials used in fixed applications.

FUEL-PIPING SYSTEM. All piping, tubing, valves and fittings used to connect fuel utilization *equipment* to the point of fuel delivery.

FULLWAY VALVE. A valve that in the full open position has an opening cross-sectional area that is not less than 85 percent of the cross-sectional area of the connecting pipe.

FURNACE. A vented heating *appliance* designed or arranged to discharge heated air into a *conditioned space* or through a duct or ducts.

[RB] GLAZING AREA. The interior surface area of all glazed fenestration, including the area of sash, curbing or other framing elements, that enclose *conditioned space*. Includes the area of glazed fenestration assemblies in walls bounding conditioned *basements*.

[RB] GRADE. The finished ground level adjoining the building at all *exterior walls*.

[RB] GRADE FLOOR OPENING. A window or other opening located such that the sill height of the opening is not more than 44 inches (1118 mm) above or below the finished ground level adjacent to the opening.

GRADE, PIPING. See "Slope."

[RB] GRADE PLANE. A reference plane representing the average of the finished ground level adjoining the building at all *exterior walls*. Where the finished ground level slopes away from the *exterior walls*, the reference plane shall be established by the lowest points within the area between the building and the *lot line* or, where the *lot line* is more than 6 feet (1829 mm) from the building between the structure and a point 6 feet (1829 mm) from the building.

GRAY WATER. Waste discharged from lavatories, bathtubs, showers, clothes washers and laundry trays.

GRIDDED WATER DISTRIBUTION SYSTEM. A water distribution system where every water distribution pipe is interconnected so as to provide two or more paths to each fixture supply pipe.

[RB] GROSS AREA OF EXTERIOR WALLS. The normal projection of all *exterior walls*, including the area of all windows and doors installed therein.

GROUND-SOURCE HEAT PUMP LOOP SYSTEM. Piping buried in horizontal or vertical excavations or placed in a body of water for the purpose of transporting heat transfer liquid to and from a heat pump. Included in this definition are closed loop systems in which the liquid is recirculated and open loop systems in which the liquid is drawn from a well or other source.

[RB] GUARD. A building component or a system of building components located near the open sides of elevated walk-

ing surfaces that minimizes the possibility of a fall from the walking surface to the lower level.

[RB] GUESTROOM. Any room or rooms used or intended to be used by one or more guests for living or sleeping purposes.

[RB] GYPSUM BOARD. The generic name for a family of sheet products consisting of a noncombustible core primarily of gypsum with paper surfacing. Gypsum wallboard, gypsum sheathing, gypsum base for gypsum *veneer* plaster, exterior gypsum soffit board, predecorated gypsum board and water-resistant gypsum backing board complying with the standards listed in Section R702.3 and Part IX of this code are types of gypsum board.

[RB] GYPSUM PANEL PRODUCT. The general name for a family of sheet products consisting essentially of gypsum.

[RB] HABITABLE SPACE. A space in a building for living, sleeping, eating or cooking. Bathrooms, toilet rooms, closets, halls, storage or utility spaces and similar areas are not considered *habitable spaces*.

[RB] HANDRAIL. A horizontal or sloping rail intended for grasping by the hand for guidance or support.

HANGERS. See "Supports."

HAZARDOUS LOCATION. Any location considered to be a fire hazard for flammable vapors, dust, combustible fibers or other highly combustible substances.

HEAT PUMP. An *appliance* having heating or heating and cooling capability and that uses refrigerants to extract heat from air, liquid or other sources.

[RE] HEATING DEGREE DAYS (HDD). The sum, on an annual basis, of the difference between 65°F (18°C) and the mean temperature for each day as determined from "NOAA Annual Degree Days to Selected Bases Derived from the 1960-1990 Normals" or other weather data sources acceptable to the code official.

[RB] HEIGHT, BUILDING. The vertical distance from *grade plane* to the average height of the highest roof surface.

[RB] HEIGHT, STORY. The vertical distance from top to top of two successive tiers of beams or finished floor surfaces; and, for the topmost *story*, from the top of the floor finish to the top of the ceiling joists or, where there is not a ceiling, to the top of the roof rafters.

[RE] HIGH-EFFICACY LAMPS. See Section N1101.6 for definition applicable in Chapter 11.

HIGH-TEMPERATURE (H.T.) CHIMNEY. A high temperature chimney complying with the requirements of UL 103. A Type H.T. chimney is identifiable by the markings "Type H.T." on each chimney pipe section.

[RB] HILL. With respect to topographic wind effects, a land surface characterized by strong relief in any horizontal direction.

[RB] HISTORIC BUILDING. Buildings that are listed in or eligible for listing in the National Register of Historic Places, or designated as historic under an appropriate state or local law.

HORIZONTAL BRANCH, DRAINAGE. A drain pipe extending laterally from a soil or waste stack or *building drain*, that receives the discharge from one or more *fixture drains*.

HORIZONTAL PIPE. Any pipe or fitting that makes an angle of less than 45 degrees (0.79 rad) with the horizontal.

HOT WATER. Water at a temperature greater than or equal to 110°F (43°C).

[RB] HURRICANE-PRONE REGIONS. Areas vulnerable to hurricanes, defined as the U.S. Atlantic Ocean and Gulf of Mexico coasts where the ultimate design wind speed, V_{ult}, is greater than 115 miles per hour (51 m/s), and Hawaii, Puerto Rico, Guam, Virgin Islands and America Samoa.

HYDROGEN-GENERATING APPLIANCE. A self-contained package or factory-matched packages of integrated systems for generating gaseous hydrogen. Hydrogen-generating *appliances* utilize electrolysis, reformation, chemical or other processes to generate hydrogen.

IGNITION SOURCE. A flame, spark or hot surface capable of igniting flammable vapors or fumes. Such sources include *appliance* burners, burner ignitions and electrical switching devices.

INDIRECT SYSTEM. A solar thermal system in which the gas or liquid in the solar collector loop circulates between the solar collector and a heat exchanger and such gas or liquid is not drained from the system or supplied to the load during normal operation.

INDIRECT WASTE PIPE. A waste pipe that discharges into the drainage system through an *air gap* into a trap, fixture or receptor.

INDIVIDUAL SEWAGE DISPOSAL SYSTEM. A system for disposal of sewage by means of a septic tank or mechanical treatment, designed for use apart from a public sewer to serve a single establishment or building.

INDIVIDUAL VENT. A pipe installed to vent a single *fixture drain* that connects with the vent system above or terminates independently outside the building.

INDIVIDUAL WATER SUPPLY. A supply other than an approved public water supply that serves one or more families.

[RB] INSULATED SIDING. A type of continuous insulation, with manufacturer-installed insulating material as an integral part of the cladding product, having a minimum *R*-value of R-2.

[RB] INSULATED VINYL SIDING. A vinyl cladding product, with manufacturer-installed foam plastic insulating material as an integral part of the cladding product, having a thermal resistance of not less than R-2.

[RB] INSULATING CONCRETE FORM (ICF). A concrete forming system using stay-in-place forms of rigid foam plastic insulation, a hybrid of cement and foam insulation, a hybrid of cement and wood chips, or other insulating material for constructing cast-in-place concrete walls.

[RE] INSULATING SHEATHING. An insulating board having a thermal resistance of not less than R-2 of the core material.

For definition applicable in Chapter 11, see Section N1101.6.

[RB] JURISDICTION. The governmental unit that has adopted this code under due legislative authority.

[RB] KITCHEN. Kitchen shall mean an area used, or designated to be used, for the preparation of food.

[RB] LABEL. An identification applied on a product by the manufacturer that contains the name of the manufacturer, the function and performance characteristics of the product or material, and the name and identification of an *approved agency* and that indicates that the representative sample of the product or material has been tested and evaluated by an *approved agency*. (See also "Manufacturer's designation" and "Mark.")

[RB] LABELED. *Equipment*, materials or products to which have been affixed a *label*, seal, symbol or other identifying *mark* of a nationally recognized testing laboratory, inspection agency or other organization concerned with product evaluation that maintains periodic inspection of the production of the *labeled* items and whose labeling indicates either that the *equipment*, material or product meets identified standards or has been tested and found suitable for a specified purpose.

[RB] LIGHT-FRAME CONSTRUCTION. A type of construction with vertical and horizontal structural elements that are primarily formed by a system of repetitive wood or cold-formed steel framing members.

[RB] LISTED. *Equipment*, materials, products or services included in a list published by an organization acceptable to the code official and concerned with evaluation of products or services that maintains periodic inspection of production of *listed equipment* or materials or periodic evaluation of services and whose listing states either that the *equipment*, material, product or service meets identified standards or has been tested and found suitable for a specified purpose.

[RB] LIVE LOADS. Those loads produced by the use and occupancy of the building or other structure and do not include construction or environmental loads such as wind load, snow load, rain load, earthquake load, flood load or dead load.

LIVING SPACE. Space within a *dwelling unit* utilized for living, sleeping, eating, cooking, bathing, washing and sanitation purposes.

LOCAL EXHAUST. An exhaust system that uses one or more fans to exhaust air from a specific room or rooms within a dwelling.

[RB] LODGING HOUSE. A one-family dwelling where one or more occupants are primarily permanent in nature, and rent is paid for guestrooms.

[RB] LOT. A portion or parcel of land considered as a unit.

[RB] LOT LINE. A line dividing one *lot* from another, or from a street or any public place.

MACERATING TOILET SYSTEMS. A system comprised of a sump with macerating pump and with connections for a water closet and other plumbing fixtures, that is designed to accept, grind and pump wastes to an *approved* point of discharge.

MAIN. The principal pipe artery to which branches may be connected.

MAIN SEWER. See "Public sewer."

MANIFOLD WATER DISTRIBUTION SYSTEMS. A fabricated piping arrangement in which a large supply main is fitted with multiple branches in close proximity in which water is distributed separately to fixtures from each branch.

[RB] MANUFACTURED HOME. *Manufactured home* means a structure, transportable in one or more sections, that in the traveling mode is 8 body feet (2438 body mm) or more in width or 40 body feet (12 192 body mm) or more in length, or, where erected on site, is 320 square feet (30 m^2) or more, and that is built on a permanent chassis and designed to be used as a *dwelling* with or without a permanent foundation where connected to the required utilities, and includes the plumbing, heating, air-conditioning and electrical systems contained therein; except that such term shall include any structure that meets all the requirements of this paragraph except the size requirements and with respect to which the manufacturer voluntarily files a certification required by the secretary (HUD) and complies with the standards established under this title. For mobile homes built prior to June 15, 1976, a *label* certifying compliance to the Standard for Mobile Homes, NFPA 501, in effect at the time of manufacture is required. For the purpose of these provisions, a mobile home shall be considered to be a *manufactured home*.

[RB] MANUFACTURER'S DESIGNATION. An identification applied on a product by the manufacturer indicating that a product or material complies with a specified standard or set of rules. (See also "Mark" and "Label.")

[RB] MANUFACTURER'S INSTALLATION INSTRUCTIONS. Printed instructions included with *equipment* as part of the conditions of their *listing* and *labeling*.

[RB] MARK. An identification applied on a product by the manufacturer indicating the name of the manufacturer and the function of a product or material. (See also "Manufacturer's designation" and "Label.")

[RB] MASONRY CHIMNEY. A field-constructed chimney composed of solid masonry units, bricks, stones or concrete.

[RB] MASONRY HEATER. A masonry heater is a solid fuel burning heating *appliance* constructed predominantly of concrete or solid masonry having a mass of not less than 1,100 pounds (500 kg), excluding the chimney and foundation. It is designed to absorb and store a substantial portion of heat from a fire built in the firebox by routing exhaust gases through internal heat exchange channels in which the flow path downstream of the firebox includes not less than one 180-degree (3.14-rad) change in flow direction before entering the chimney and that deliver heat by radiation through the masonry surface of the heater.

[RB] MASONRY, SOLID. Masonry consisting of solid masonry units laid contiguously with the joints between the units filled with mortar.

[RB] MASONRY UNIT. Brick, tile, stone, architectural cast stone, glass block or concrete block conforming to the requirements specified in Section 2103 of the *International Building Code.*

Clay. A building unit larger in size than a brick, composed of burned clay, shale, fire clay or mixtures thereof.

Concrete. A building unit or block larger in size than 12 inches by 4 inches by 4 inches (305 mm by 102 mm by 102 mm) made of cement and suitable aggregates.

Glass. Nonload-bearing masonry composed of glass units bonded by mortar.

Hollow. A masonry unit with a net cross-sectional area in any plane parallel to the loadbearing surface that is less than 75 percent of its gross cross-sectional area measured in the same plane.

Solid. A masonry unit with a net cross-sectional area in every plane parallel to the loadbearing surface that is 75 percent or more of its cross-sectional area measured in the same plane.

[RE] MASS WALL. Masonry or concrete walls having a mass greater than or equal to 30 pounds per square foot (146 kg/m^2), solid wood walls having a mass greater than or equal to 20 pounds per square foot (98 kg/m^2), and any other walls having a heat capacity greater than or equal to 6 Btu/ft^2 · °F [123 J/(m^2 · K)].

[RB] MEAN ROOF HEIGHT. The average of the roof eave height and the height to the highest point on the roof surface, except that eave height shall be used for roof angle of less than or equal to 10 degrees (0.18 rad).

MECHANICAL DRAFT SYSTEM. A venting system designed to remove flue or vent gases by mechanical means, that consists of an induced draft portion under nonpositive static pressure or a forced draft portion under positive static pressure.

Forced-draft venting system. A portion of a venting system using a fan or other mechanical means to cause the removal of flue or vent gases under positive static pressure.

Induced draft venting system. A portion of a venting system using a fan or other mechanical means to cause the removal of flue or vent gases under nonpositive static vent pressure.

Power venting system. A portion of a venting system using a fan or other mechanical means to cause the removal of flue or vent gases under positive static vent pressure.

MECHANICAL EXHAUST SYSTEM. A system for removing air from a room or space by mechanical means.

MECHANICAL JOINT.

1. A connection between pipes, fittings or pipes and fittings that is not welded, brazed, caulked, soldered, solvent cemented or heat-fused.
2. A general form of gas- or liquid-tight connections obtained by the joining of parts through a positive holding mechanical construction such as, but not limited to, flanged, screwed, clamped or flared connections.

MECHANICAL SYSTEM. A system specifically addressed and regulated in this code and composed of components, devices, *appliances* and *equipment.*

[RB] METAL ROOF PANEL. An interlocking metal sheet having an installed weather exposure of not less than 3 square feet (0.28 m^2) per sheet.

[RB] METAL ROOF SHINGLE. An interlocking metal sheet having an installed weather exposure less than 3 square feet (0.28 m^2) per sheet.

[RB] MEZZANINE. An intermediate level or levels between the floor and ceiling of any *story.*

[RB] MODIFIED BITUMEN ROOF COVERING. One or more layers of polymer modified asphalt sheets. The sheet materials shall be fully adhered or mechanically attached to the substrate or held in place with an *approved* ballast layer.

[RB] MULTIPLE STATION SMOKE ALARM. Two or more single station alarm devices that are capable of interconnection such that actuation of one causes all integral or separate audible alarms to operate.

[RB] NAILABLE SUBSTRATE. A product or material such as framing, sheathing or furring, composed of wood or wood-based materials, or other materials and fasteners providing equivalent fastener withdrawal resistance.

NATURAL DRAFT SYSTEM. A venting system designed to remove flue or vent gases under nonpositive static vent pressure entirely by natural draft.

[RB] NATURALLY DURABLE WOOD. The heartwood of the following species with the exception that an occasional piece with corner sapwood is permitted if 90 percent or more of the width of each side on which it occurs is heartwood.

Decay resistant. Redwood, cedar, black locust and black walnut.

Termite resistant. Alaska yellow cedar, redwood, Eastern red cedar and Western red cedar including all sapwood of Western red cedar.

[RB] NONCOMBUSTIBLE MATERIAL. Materials that pass the test procedure for defining noncombustibility of elementary materials set forth in ASTM E 136.

[RB] NOSING. The leading edge of treads of stairs and of landings at the top of stairway flights.

[RB] OCCUPIED SPACE. The total area of all buildings or structures on any *lot* or parcel of ground projected on a horizontal plane, excluding permitted projections as allowed by this code.

OFFSET. A combination of fittings that makes two changes in direction, bringing one section of the pipe out of line and into a line parallel with the other section.

ON-SITE NONPOTABLE WATER REUSE SYSTEMS. Water systems for the collection, treatment, storage, distribution, and reuse of nonpotable water generated on site, includ-

ing but not limited to graywater systems. This definition does not include rainwater harvesting systems.

[RB] OWNER. Any person, agent, firm or corporation having a legal or equitable interest in the property.

[RB] PAN FLASHING. Corrosion-resistant flashing at the base of an opening that is integrated into the building exterior wall to direct water to the exterior and is premanufactured, fabricated, formed or applied at the job site.

[RB] PANEL THICKNESS. Thickness of core plus two layers of structural wood panel facings.

PELLET FUEL-BURNING APPLIANCE. A closed combustion, vented *appliance* equipped with a fuel feed mechanism for burning processed pellets of solid fuel of a specified size and composition.

PELLET VENT. A vent *listed* and *labeled* for use with a *listed* pellet fuel-burning *appliance.*

[RB] PERFORMANCE CATEGORY. A designation of wood structural panels as related to the panel performance used in Chapters 4, 5, 6 and 8.

[RB] PERMIT. An official document or certificate issued by the authority having jurisdiction that authorizes performance of a specified activity.

[RB] PERSON. An individual, heirs, executors, administrators or assigns, and a firm, partnership or corporation, its or their successors or assigns, or the agent of any of the aforesaid.

[RB] PHOTOVOLTAIC MODULE. A complete, environmentally protected unit consisting of solar cells, optics and other components, exclusive of a tracker, designed to generate DC power where exposed to sunlight.

[RB] PHOTOVOLTAIC PANEL. A collection of photovoltaic modules mechanically fastened together, wired, and designed to provide a field-installable unit.

[RB] PHOTOVOLTAIC PANEL SYSTEM. A system that incorporates discrete photovoltaic panels that convert solar radiation into electricity, including rack support systems.

[RB] PHOTOVOLTAIC SHINGLES. A *roof covering* that resembles shingles and that incorporates photovoltaic modules.

PITCH. See "Slope."

[RB] PLASTIC COMPOSITE. A generic designation that refers to wood-plastic composites and plastic lumber.

[RB] PLATFORM CONSTRUCTION. A method of construction by which floor framing bears on load bearing walls that are not continuous through the *story* levels or floor framing.

PLENUM. A chamber that forms part of an air-circulation system other than the *occupied space* being conditioned.

PLUMBING. For the purpose of this code, plumbing refers to those installations, repairs, maintenance and *alterations* regulated by Chapters 25 through 33.

PLUMBING APPLIANCE. An energized household *appliance* with plumbing connections, such as a dishwasher, food waste disposer, clothes washer or water heater.

PLUMBING APPURTENANCE. A device or assembly that is an adjunct to the basic plumbing system and does not demand additional water supply or add any discharge load to the system. It is presumed that it performs some useful function in the operation, maintenance, servicing, economy or safety of the plumbing system. Examples include filters, relief valves and aerators.

PLUMBING FIXTURE. A receptacle or device that is connected to a water supply system or discharges to a drainage system or both. Such receptacles or devices require a supply of water; or discharge liquid waste or liquid-borne solid waste; or require a supply of water and discharge waste to a drainage system.

PLUMBING SYSTEMS. Includes the water distribution pipes; plumbing fixtures and traps; water-treating or water-using *equipment*; soil, waste and vent pipes; and building drains; in addition to their respective connections, devices and appurtenances within a structure or premises; and the water service, building sewer and building storm sewer serving such structure or premises.

POLLUTION. A low-hazard or non-health hazard impairment of the quality of the potable water to a degree that does not create a hazard to the public health and that does adversely and unreasonably affect the aesthetic qualities of such potable water for domestic use.

[RB] POLYPROPYLENE SIDING. A shaped material, made principally from polypropylene homopolymer, or copolymer, that in some cases contains fillers or reinforcements, that is used to clad *exterior walls* or buildings.

PORTABLE-FUEL-CELL APPLIANCE. A fuel cell generator of electricity that is not fixed in place. A portable-fuel-cell *appliance* utilizes a cord and plug connection to a grid-isolated load and has an integral fuel supply.

[RB] POSITIVE ROOF DRAINAGE. The drainage condition in which consideration has been made for the loading deflections of the roof deck, and additional slope has been provided to ensure drainage of the roof within 48 hours of precipitation.

POTABLE WATER. Water free from impurities present in amounts sufficient to cause disease or harmful physiological effects and conforming in bacteriological and chemical quality to the requirements of the public health authority having jurisdiction.

[RB] PRECAST CONCRETE. A structural concrete element cast elsewhere than its final position in the structure.

[RB] PRECAST CONCRETE FOUNDATION WALLS. Pre-engineered, precast concrete wall panels that are designed to withstand specified stresses and used to build below-*grade* foundations.

PRESSURE-RELIEF VALVE. A pressure-actuated valve held closed by a spring or other means and designed to automatically relieve pressure at the pressure at which it is set.

PUBLIC SEWER. A common sewer directly controlled by public authority.

PUBLIC WATER MAIN. A water-supply pipe for public use controlled by public authority.

[RB] PUBLIC WAY. Any street, alley or other parcel of land open to the outside air leading to a public street, that has been deeded, dedicated or otherwise permanently appropriated to the public for public use and that has a clear width and height of not less than 10 feet (3048 mm).

PURGE. To clear of air, gas or other foreign substances.

QUICK-CLOSING VALVE. A valve or faucet that closes automatically where released manually or controlled by mechanical means for fast-action closing.

[RE] *R*-VALUE, THERMAL RESISTANCE. The inverse of the time rate of heat flow through a *building thermal envelope* element from one of its bounding surfaces to the other for a unit temperature difference between the two surfaces, under steady state conditions, per unit area ($h \cdot ft^2 \cdot °F/Btu$).

[RB] RAMP. A walking surface that has a running slope steeper than 1 unit vertical in 20 units horizontal (5-percent slope).

[RE] RATED DESIGN. A description of the proposed *building,* used to determine the energy rating index.

RECEPTOR. A fixture or device that receives the discharge from indirect waste pipes.

RECLAIMED WATER. Nonpotable water that has been derived from the treatment of waste water by a facility or system licensed or permitted to produce water meeting the *jurisdiction's* water requirements for its intended uses. Also known as "Recycled Water."

[RE] REFLECTIVE DUCT INSULATION. A thermal insulation assembly consisting of one or more surfaces that have an emittance of 0.1 or less, and that bound an enclosed air space or spaces.

REFRIGERANT. A substance used to produce refrigeration by its expansion or evaporation.

REFRIGERANT COMPRESSOR. A specific machine, with or without accessories, for compressing a given refrigerant vapor.

REFRIGERATING SYSTEM. A combination of interconnected parts forming a closed circuit in which refrigerant is circulated for the purpose of extracting, then rejecting, heat. A direct refrigerating system is one in which the evaporator or condenser of the refrigerating system is in direct contact with the air or other substances to be cooled or heated. An indirect refrigerating system is one in which a secondary coolant cooled or heated by the refrigerating system is circulated to the air or other substance to be cooled or heated.

[RB] REGISTERED DESIGN PROFESSIONAL. An individual who is registered or licensed to practice their respective design profession as defined by the statutory requirements of the professional registration laws of the state or *jurisdiction* in which the project is to be constructed.

RELIEF VALVE, VACUUM. A device to prevent excessive buildup of vacuum in a pressure vessel.

[RB] REPAIR. The reconstruction or renewal of any part of an existing building for the purpose of its maintenance or to correct damage.

For definition applicable in Chapter 11, see Section N1101.6.

[RB] REROOFING. The process of recovering or replacing an existing roof covering. See "Roof recover."

For definition applicable in Chapter 11, see Section N1101.6.

RETURN AIR. Air removed from an *approved conditioned space* or location and recirculated or exhausted.

[RB] RIDGE. With respect to topographic wind effects, an elongated crest of a hill characterized by strong relief in two directions.

[RB] RISER.

1. The vertical component of a step or stair.
2. A water pipe that extends vertically one full *story* or more to convey water to branches or to a group of fixtures.

[RB] ROOF ASSEMBLY. A system designed to provide weather protection and resistance to design loads. The system consists of a roof covering and roof deck or a single component serving as both the roof covering and the roof deck. A roof assembly includes the roof deck, vapor retarder, substrate or thermal barrier, insulation, vapor retarder, and roof covering.

[RB] ROOF COVERING. The covering applied to the roof deck for weather resistance, fire classification or appearance.

ROOF COVERING SYSTEM. See "Roof assembly."

[RB] ROOF DECK. The flat or sloped surface not including its supporting members or vertical supports.

[RB] ROOF RECOVER. The process of installing an additional roof covering over a prepared existing roof covering without removing the existing roof covering.

For definition applicable in Chapter 11, see Section N1101.6.

[RB] ROOF REPAIR. Reconstruction or renewal of any part of an existing roof for the purposes of its maintenance.

For definition applicable in Chapter 11, see Section N1101.6.

[RB] ROOF REPLACEMENT. The process of removing the existing *roof covering*, repairing any damaged substrate and installing a new *roof covering*.

[RB] ROOFTOP STRUCTURE. An enclosed structure on or above the roof of any part of a building.

ROOM HEATER. A freestanding heating *appliance* installed in the space being heated and not connected to ducts.

ROUGH-IN. The installation of the parts of the plumbing system that must be completed prior to the installation of fixtures. This includes DWV, water supply and built-in fixture supports.

[RB] RUNNING BOND. The placement of masonry units such that head joints in successive courses are horizontally offset not less than one-quarter the unit length.

SANITARY SEWER. A sewer that carries sewage and excludes storm, surface and groundwater.

SCUPPER. An opening in a wall or parapet that allows water to drain from a roof.

[RB] SEISMIC DESIGN CATEGORY (SDC). A classification assigned to a structure based on its occupancy category and the severity of the design earthquake ground motion at the site.

SEPTIC TANK. A water-tight receptor that receives the discharge of a building sanitary drainage system and is constructed so as to separate solids from the liquid, digest organic matter through a period of detention, and allow the liquids to discharge into the soil outside of the tank through a system of open joint or perforated piping or a seepage pit.

SEWAGE. Any liquid waste containing animal matter, vegetable matter or other impurity in suspension or solution.

SEWAGE PUMP. A permanently installed mechanical device for removing sewage or liquid waste from a sump.

[RB] SHALL. The term, where used in the code, is construed as mandatory.

[RB] SHEAR WALL. A general term for walls that are designed and constructed to resist racking from seismic and wind by use of masonry, concrete, cold-formed steel or wood framing in accordance with Chapter 6 of this code and the associated limitations in Section R301.2 of this code.

[RB] SINGLE PLY MEMBRANE. A roofing membrane that is field applied using one layer of membrane material (either homogeneous or composite) rather than multiple layers.

[RB] SINGLE STATION SMOKE ALARM. An assembly incorporating the detector, control *equipment* and alarm sounding device in one unit that is operated from a power supply either in the unit or obtained at the point of installation.

[RB] SHINGLE FASHION. A method of installing roof or wall coverings, water-resistive barriers, flashing or other building components such that upper layers of material are placed overlapping lower layers of material to provide drainage and protect against water intrusion at unsealed penetrations and joints or in combination with sealed joints.

[RE] SKYLIGHT. See Section N1101.6 for definition applicable in Chapter 11.

[RB] SKYLIGHT AND SLOPED GLAZING. Glass or other transparent or translucent glazing material installed at a slope of 15 degrees (0.26 rad) or more from vertical. Glazing materials in skylights, including unit skylights, tubular daylighting devices, solariums, sunrooms, roofs and sloped walls are included in this definition.

[RB] SKYLIGHT, UNIT. A factory assembled, glazed fenestration unit, containing one panel of glazing material, that allows for natural daylighting through an opening in the roof assembly while preserving the weather-resistant barrier of the roof.

[RE] SLEEPING UNIT. See Section N1101.6 for definition applicable in Chapter 11.

SLIP JOINT. A mechanical-type joint used primarily on fixture traps. The joint tightness is obtained by compressing a friction-type washer such as rubber, nylon, neoprene, lead or special packing material against the pipe by the tightening of a (slip) nut.

SLOPE. The fall (pitch) of a line of pipe in reference to a horizontal plane. In drainage, the slope is expressed as the fall in units vertical per units horizontal (percent) for a length of pipe.

[RB] SMOKE-DEVELOPED INDEX. A comparative measure, expressed as a dimensionless number, derived from measurements of smoke obscuration versus time for a material tested in accordance with ASTM E 84 or UL 723.

SOIL STACK OR PIPE. A pipe that conveys sewage containing fecal material.

[RE] SOLAR HEAT GAIN COEFFICIENT (SHGC). The solar heat gain through a fenestration or glazing assembly relative to the incident solar radiation (Btu/h · ft^2 · °F).

[RB] SOLID MASONRY. Load-bearing or nonload-bearing construction using masonry units where the net cross-sectional area of each unit in any plane parallel to the bearing surface is not less than 75 percent of its gross cross-sectional area. Solid masonry units shall conform to ASTM C 55, C 62, C 73, C 145 or C 216.

[RB] SPLINE. A strip of wood structural panel cut from the same material used for the panel facings, used to connect two structural insulated panels. The strip (spline) fits into a groove cut into the vertical edges of the two structural insulated panels to be joined. Splines are used behind each facing of the structural insulated panels being connected as shown in Figure R613.8.

STACK. Any main vertical DWV line, including offsets, that extends one or more stories as directly as possible to its vent terminal.

[RB] STACK BOND. The placement of masonry units in a bond pattern is such that head joints in successive courses are vertically aligned. For the purpose of this code, requirements for stack bond shall apply to all masonry laid in other than running bond.

STACK VENT. The extension of soil or waste stack above the highest horizontal drain connected.

[RB] STAIR. A change in elevation, consisting of one or more risers.

[RB] STAIRWAY. One or more flights of stairs, either interior or exterior, with the necessary landings and connecting platforms to form a continuous and uninterrupted passage from one level to another within or attached to a building, porch or deck.

[RB] STAIRWAY, SPIRAL. A stairway with a plan view of closed circular form and uniform section-shaped treads radiating from a minimum-diameter circle.

[RB] STANDARD TRUSS. Any construction that does not permit the roof-ceiling insulation to achieve the required *R*-value over the *exterior walls*.

STATIONARY FUEL CELL POWER PLANT. A self-contained package or factory-matched packages that constitute an automatically-operated assembly of integrated sys-

tems for generating useful electrical energy and recoverable thermal energy that is permanently connected and fixed in place.

STORM SEWER, DRAIN. A pipe used for conveying rainwater, surface water, subsurface water and similar liquid waste.

[RB] STORY. That portion of a building included between the upper surface of a floor and the upper surface of the floor or roof next above.

[RB] STORY ABOVE GRADE PLANE. Any *story* having its finished floor surface entirely above *grade plane*, or in which the finished surface of the floor next above is either of the following:

1. More than 6 feet (1829 mm) *above grade plane.*
2. More than 12 feet (3658 mm) above the finished ground level at any point.

[RB] STRUCTURAL COMPOSITE LUMBER. Structural members manufactured using wood elements bonded together with exterior adhesives.

Examples of structural composite lumber are:

Laminated veneer lumber (LVL). A composite of wood veneer elements with wood fibers primarily oriented along the length of the member, where the veneer element thicknesses are 0.25 inches (6.4 mm) or less.

Parallel strand lumber (PSL). A composite of wood strand elements with wood fibers primarily oriented along the length of the member, where the least dimension of the wood strand elements is 0.25 inch (6.4 mm) or less and their average lengths are not less than 300 times the least dimension of the wood strand elements.

Laminated strand lumber (LSL). A composite of wood strand elements with wood fibers primarily oriented along the length of the member, where the least dimension of the wood strand elements is 0.10 inch (2.54 mm) or less and their average lengths are not less than 150 times the least dimension of the wood strand elements.

Oriented strand lumber (OSL). A composite of wood strand elements with wood fibers primarily oriented along the length of the member, where the least dimension of the wood strand elements is 0.10 inch (2.54 mm) or less and their average lengths are not less than 75 times and less than 150 times the least dimension of the wood strand elements.

[RB] STRUCTURAL INSULATED PANEL (SIP). A structural sandwich panel that consists of a light-weight foam plastic core securely laminated between two thin, rigid wood structural panel facings.

[RB] STRUCTURE. That which is built or constructed.

[RB] SUBSOIL DRAIN. A drain that collects subsurface water or seepage water and conveys such water to a place of disposal.

SUMP. A tank or pit that receives sewage or waste, located below the normal *grade* of the gravity system and that must be emptied by mechanical means.

SUMP PUMP. A pump installed to empty a sump. These pumps are used for removing storm water only. The pump is selected for the specific head and volume of the load and is usually operated by level controllers.

[RB] SUNROOM. A one-story structure attached to a *dwelling* with a *glazing area* in excess of 40 percent of the gross area of the structure's *exterior walls* and roof.

For definition applicable in Chapter 11, see Section N1101.6.

SUPPLY AIR. Air delivered to a *conditioned space* through ducts or plenums from the heat exchanger of a heating, cooling or ventilating system.

SUPPORTS. Devices for supporting, hanging and securing pipes, fixtures and *equipment.*

SWEEP. A drainage fitting designed to provide a change in direction of a drain pipe of less than the angle specified by the amount necessary to establish the desired slope of the line. Sweeps provide a longer turning radius than bends and a less turbulent flow pattern (see "Bend" and "Elbow").

TEMPERATURE- AND PRESSURE-RELIEF (T AND P) VALVE. A combination relief valve designed to function as both a temperature-relief and pressure-relief valve.

TEMPERATURE-RELIEF VALVE. A temperature-actuated valve designed to discharge automatically at the temperature at which it is set.

[RB] TERMITE-RESISTANT MATERIAL. Pressure-preservative treated wood in accordance with the AWPA standards in Section R318.1, naturally durable termite-resistant wood, steel, concrete, masonry or other *approved* material.

[RB] THERMAL ISOLATION. Physical and space conditioning separation from *conditioned space(s)* consisting of existing or new walls, doors or windows. The *conditioned space(s)* shall be controlled as separate zones for heating and cooling or conditioned by separate *equipment.*

For definition applicable in Chapter 11, see Section N1101.6.

[RE] THERMAL RESISTANCE, *R*-VALUE. The inverse of the time rate of heat flow through a body from one of its bounding surfaces to the other for a unit temperature difference between the two surfaces, under steady state conditions, per unit area ($h \cdot ft^2 \cdot °F/Btu$) ($m^2 \cdot K$)/W.

[RE] THERMAL TRANSMITTANCE, *U*-FACTOR. The coefficient of heat transmission (air to air) through a building envelope component or assembly, equal to the time rate of heat flow per unit area and unit temperature difference between the warm side and cold side air films ($Btu/h \cdot ft^2 \cdot °F$) $W/(m^2 \cdot K)$.

[RB] THIRD-PARTY CERTIFICATION AGENCY. An approved agency operating a product or material certification system that incorporates initial product testing, assessment and surveillance of a manufacturer's quality control system.

[RB] THIRD PARTY CERTIFIED. Certification obtained by the manufacturer indicating that the function and performance characteristics of a product or material have been determined by testing and ongoing surveillance by an

approved third-party certification agency. Assertion of certification is in the form of identification in accordance with the requirements of the third-party certification agency.

[RB] THIRD-PARTY TESTED. Procedure by which an approved testing laboratory provides documentation that a product material or system conforms to specified requirements.

[RB] TOWNHOUSE. A single-family *dwelling unit* constructed in a group of three or more attached units in which each unit extends from foundation to roof and with a *yard* or public way on not less than two sides.

TRAP. A fitting, either separate or built into a fixture, that provides a liquid seal to prevent the emission of sewer gases without materially affecting the flow of sewage or waste water through it.

TRAP ARM. That portion of a *fixture drain* between a trap weir and the vent fitting.

TRAP PRIMER. A device or system of piping to maintain a water seal in a trap, typically installed where infrequent use of the trap would result in evaporation of the trap seal, such as floor drains.

TRAP SEAL. The trap seal is the maximum vertical depth of liquid that a trap will retain, measured between the crown weir and the top of the dip of the trap.

[RB] TRIM. Picture molds, chair rails, baseboards, handrails, door and window frames, and similar decorative or protective materials used in fixed applications.

[RB] TRUSS DESIGN DRAWING. The graphic depiction of an individual truss, that describes the design and physical characteristics of the truss.

[RE] TUBULAR DAYLIGHTING DEVICE (TDD). A nonoperable fenestration unit primarily designed to transmit daylight from a roof surface to an interior ceiling via a tubular conduit. The basic unit consists of an exterior glazed weathering surface, a light-transmitting tube with a reflective interior surface, and an interior-sealing device such as a translucent ceiling panel. The unit may be factory assembled, or field assembled from a manufactured kit.

TYPE L VENT. A *listed* and *labeled* vent conforming to UL 641 for venting oil-burning *appliances listed* for use with Type L vents or with gas *appliances listed* for use with Type B vents.

[RE] *U*-FACTOR, THERMAL TRANSMITTANCE. See Section N1101.6 for definition applicable in Chapter 11.

[RB] UNDERLAYMENT. One or more layers of felt, sheathing paper, nonbituminous saturated felt, or other *approved* material over which a roof covering, with a slope of 2 to 12 (17-percent slope) or greater, is applied.

VACUUM BREAKER. A device that prevents back-siphonage of water by admitting atmospheric pressure through ports to the discharge side of the device.

[RB] VAPOR PERMEABLE. The property of having a moisture vapor permeance rating of 5 perms (2.9×10^{-10} kg/Pa · s · m^2) or greater, where tested in accordance with the desiccant method using Procedure A of ASTM E 96. A vapor permeable material permits the passage of moisture vapor.

[RB] VAPOR RETARDER CLASS. A measure of the ability of a material or assembly to limit the amount of moisture that passes through that material or assembly. Vapor retarder class shall be defined using the desiccant method with Procedure A of ASTM E 96 as follows:

Class I: 0.1 perm or less

Class II: 0.1 < perm ≤ 1.0 perm

Class III: 1.0 < perm ≤ 10 perm

VENT. A passageway for conveying flue gases from fuel-fired *appliances*, or their vent connectors, to the outside atmosphere.

VENT COLLAR. See "Flue collar."

VENT CONNECTOR. That portion of a venting system that connects the flue collar or draft hood of an *appliance* to a vent.

VENT DAMPER DEVICE, AUTOMATIC. A device intended for installation in the venting system, in the outlet of an individual, automatically operated fuel burning *appliance* and that is designed to open the venting system automatically where the *appliance* is in operation and to close off the venting system automatically where the *appliance* is in a standby or shutdown condition.

VENT GASES. Products of combustion from fuel-burning *appliances*, plus excess air and dilution air, in the venting system above the draft hood or draft regulator.

VENT STACK. A vertical vent pipe installed to provide circulation of air to and from the drainage system and that extends through one or more stories.

VENT SYSTEM. Piping installed to equalize pneumatic pressure in a drainage system to prevent trap seal loss or blow-back due to siphonage or back pressure.

VENTILATION. The natural or mechanical process of supplying conditioned or unconditioned air to, or removing such air from, any space.

For definition applicable in Chapter 11, see Section N1101.6.

VENTING. Removal of combustion products to the outdoors.

VENTING SYSTEM. A continuous open passageway from the flue collar of an *appliance* to the outside atmosphere for the purpose of removing flue or vent gases. A venting system is usually composed of a vent or a chimney and vent connector, if used, assembled to form the open passageway.

VERTICAL PIPE. Any pipe or fitting that makes an angle of 45 degrees (0.79 rad) or more with the horizontal.

[RB] VINYL SIDING. A shaped material, made principally from rigid polyvinyl chloride (PVC), that is used to cover exterior walls of buildings.

[RB] WALL, RETAINING. A wall not laterally supported at the top, that resists lateral soil load and other imposed loads.

[RB] WALLS. Walls shall be defined as follows:

Load-bearing wall. A wall supporting any vertical load in addition to its own weight.

Nonbearing wall. A wall which does not support vertical loads other than its own weight.

WASTE. Liquid-borne waste that is free of fecal matter.

WASTE PIPE OR STACK. Piping that conveys only liquid sewage not containing fecal material.

WASTE RECEPTOR. A floor sink, standpipe, hub drain or a floor drain that receives the discharge of one or more indirect waste pipes.

WATER DISTRIBUTION SYSTEM. Piping that conveys water from the service to the plumbing fixtures, *appliances*, appurtenances, *equipment*, devices or other systems served, including fittings and control valves.

WATER HEATER. Any heating *appliance* or *equipment* that heats potable water and supplies such water to the potable hot water distribution system.

WATER MAIN. A water supply pipe for public use.

WATER OUTLET. A valved discharge opening, including a hose bibb, through which water is removed from the potable water system supplying water to a plumbing fixture or plumbing *appliance* that requires either an *air gap* or backflow prevention device for protection of the supply system.

[RB] WATER-RESISTIVE BARRIER. A material behind an *exterior wall* covering that is intended to resist liquid water that has penetrated behind the exterior covering from further intruding into the *exterior wall* assembly.

WATER SERVICE PIPE. The outside pipe from the water main or other source of potable water supply to the water distribution system inside the building, terminating at the service valve.

WATER SUPPLY SYSTEM. The water service pipe, the water-distributing pipes and the necessary connecting pipes, fittings, control valves and appurtenances in or adjacent to the building or premises.

WET VENT. A vent that receives the discharge of wastes from other fixtures.

WHOLE-HOUSE MECHANICAL VENTILATION SYSTEM. An exhaust system, supply system, or combination thereof that is designed to mechanically exchange indoor air for outdoor air where operating continuously or through a programmed intermittent schedule to satisfy the whole-house ventilation rate.

For definition applicable in Chapter 11, see Section N1101.6.

[RB] WINDBORNE DEBRIS REGION. Areas within *hurricane-prone regions* located in accordance with one of the following:

1. Within 1 mile (1.61 km) of the coastal mean high water line where the ultimate design wind speed, V_{ult}, is 130 mph (58 m/s) or greater.
2. In areas where the ultimate design wind speed, V_{ult}, is 140 mph (63.6 m/s) or greater; or Hawaii.

[RB] WINDER. A tread with nonparallel edges.

[RB] WOOD STRUCTURAL PANEL. A panel manufactured from veneers; or wood strands or wafers; bonded together with waterproof synthetic resins or other suitable bonding systems. Examples of wood structural panels are plywood, OSB or composite panels.

[RB] YARD. An open space, other than a court, unobstructed from the ground to the sky, except where specifically provided by this code, on the *lot* on which a building is situated.

Part III—Building Planning and Construction

CHAPTER 3

BUILDING PLANNING

SECTION R301
DESIGN CRITERIA

R301.1 Application. Buildings and structures, and parts thereof, shall be constructed to safely support all loads, including dead loads, live loads, roof loads, flood loads, snow loads, wind loads and seismic loads as prescribed by this code. The construction of buildings and structures in accordance with the provisions of this code shall result in a system that provides a complete load path that meets the requirements for the transfer of loads from their point of origin through the load-resisting elements to the foundation. Buildings and structures constructed as prescribed by this code are deemed to comply with the requirements of this section.

R301.1.1 Alternative provisions. As an alternative to the requirements in Section R301.1, the following standards are permitted subject to the limitations of this code and the limitations therein. Where engineered design is used in conjunction with these standards, the design shall comply with the *International Building Code*.

1. AF&PA *Wood Frame Construction Manual* (WFCM).
2. AISI *Standard for Cold-Formed Steel Framing—Prescriptive Method for One- and Two-Family Dwellings* (AISI S230).
3. ICC *Standard on the Design and Construction of Log Structures* (ICC 400).

R301.1.2 Construction systems. The requirements of this code are based on platform and balloon-frame construction for light-frame buildings. The requirements for concrete and masonry buildings are based on a balloon framing system. Other framing systems must have equivalent detailing to ensure force transfer, continuity and compatible deformations.

R301.1.3 Engineered design. Where a building of otherwise conventional construction contains structural elements exceeding the limits of Section R301 or otherwise not conforming to this code, these elements shall be designed in accordance with accepted engineering practice. The extent of such design need only demonstrate compliance of nonconventional elements with other applicable provisions and shall be compatible with the performance of the conventional framed system. Engineered design in accordance with the *International Building Code* is permitted for buildings and structures, and parts thereof, included in the scope of this code.

R301.2 Climatic and geographic design criteria. Buildings shall be constructed in accordance with the provisions of this code as limited by the provisions of this section. Additional criteria shall be established by the local *jurisdiction* and set forth in Table R301.2(1).

R301.2.1 Wind design criteria. Buildings and portions thereof shall be constructed in accordance with the wind provisions of this code using the ultimate design wind speed in Table R301.2(1) as determined from Figure R301.2(4)A. The structural provisions of this code for wind loads are not permitted where wind design is required as specified in Section R301.2.1.1. Where different construction methods and structural materials are used for various portions of a building, the applicable requirements of this section for each portion shall apply. Where not otherwise specified, the wind loads listed in Table R301.2(2) adjusted for height and exposure using Table R301.2(3) shall be used to determine design load performance requirements for wall coverings, curtain walls, roof coverings, exterior windows, skylights, garage doors and exterior doors. Asphalt shingles shall be designed for wind speeds in accordance with Section R905.2.4. A continuous load path shall be provided to transmit the applicable uplift forces in Section R802.11.1 from the roof assembly to the foundation.

R301.2.1.1 Wind limitations and wind design required. The wind provisions of this code shall not apply to the design of buildings where wind design is required in accordance with Figure R301.2(4)B.

Exceptions:

1. For concrete construction, the wind provisions of this code shall apply in accordance with the limitations of Sections R404 and R608.
2. For structural insulated panels, the wind provisions of this code shall apply in accordance with the limitations of Section R610.
3. For cold-formed steel light-frame construction, the wind provisions of this code shall apply in accordance with the limitations of Sections R505, R603 and R804.

In regions where wind design is required in accordance with Figure R301.2(4)B, the design of buildings for wind loads shall be in accordance with one or more of the following methods:

1. AF&PA *Wood Frame Construction Manual* (WFCM).
2. ICC *Standard for Residential Construction in High-Wind Regions* (ICC 600).

3. ASCE *Minimum Design Loads for Buildings and Other Structures* (ASCE 7).
4. AISI *Standard for Cold-Formed Steel Framing—Prescriptive Method For One- and Two-Family Dwellings* (AISI S230).
5. *International Building Code.*

The elements of design not addressed by the methods in Items 1 through 5 shall be in accordance with the provisions of this code.

Where ASCE 7 or the *International Building Code* is used for the design of the building, the wind speed map and exposure category requirements as specified in ASCE 7 and the *International Building Code* shall be used.

R301.2.1.1.1 Sunrooms. Sunrooms shall comply with AAMA/NPEA/NSA 2100. For the purpose of applying the criteria of AAMA/NPEA/NSA 2100 based on the intended use, sunrooms shall be identified as one of the following categories by the permit applicant, design professional or the property owner or owner's agent in the construction documents. Component and cladding pressures shall be used for the design of elements that do not qualify as main windforce-resisting systems. Main windforce-resisting system pressures shall be used for the design of elements assigned to provide support and stability for the overall *sunroom.*

Category I: A thermally isolated sunroom with walls that are open or enclosed with insect screening or 0.5 mm (20 mil) maximum thickness plastic film. The space is nonhabitable and unconditioned.

Category II: A thermally isolated sunroom with enclosed walls. The openings are enclosed with translucent or transparent plastic or glass. The space is nonhabitable and unconditioned.

Category III: A thermally isolated sunroom with enclosed walls. The openings are enclosed with translucent or transparent plastic or glass. The sunroom fenestration complies with additional requirements for air infiltration resistance and water penetration resistance. The space is nonhabitable and unconditioned.

Category IV: A thermally isolated sunroom with enclosed walls. The sunroom is designed to be heated or cooled by a separate temperature control or system and is thermally isolated from the primary structure. The sunroom fenestration complies with additional requirements for water penetration resistance, air infiltration resistance and thermal performance. The space is nonhabitable and conditioned.

Category V: A sunroom with enclosed walls. The sunroom is designed to be heated or cooled and is open to the main structure. The sunroom fenestration complies with additional requirements for water penetration resistance, air infiltration resistance and thermal performance. The space is habitable and conditioned.

R301.2.1.2 Protection of openings. Exterior glazing in buildings located in windborne debris regions shall be protected from windborne debris. Glazed opening protection for windborne debris shall meet the requirements of the Large Missile Test of ASTM E 1996 and ASTM E 1886 as modified in Section 301.2.1.2.1. Garage door glazed opening protection for windborne debris shall meet the requirements of an *approved* impact-resisting standard or ANSI/DASMA 115.

Exception: Wood structural panels with a thickness of not less than $^{7}/_{16}$ inch (11 mm) and a span of not more than 8 feet (2438 mm) shall be permitted for opening protection. Panels shall be precut and attached to the framing surrounding the opening containing the product with the glazed opening. Panels shall be predrilled as required for the anchorage method and shall be secured with the attachment hardware provided. Attachments shall be designed to resist the component and cladding loads determined in accordance with either Table R301.2(2) or ASCE 7, with the permanent corrosion-resistant attachment hardware provided and anchors permanently installed on the building. Attachment in accordance with Table R301.2.1.2 is permitted for buildings with a *mean roof height* of 45 feet (13, 728 mm) or less where the ultimate design wind speed, V_{ult}, is 180 mph (290 kph) or less.

TABLE R301.2(1)
CLIMATIC AND GEOGRAPHIC DESIGN CRITERIA

GROUND SNOW LOAD	WIND DESIGN				SEISMIC DESIGN CATEGORY[f]	SUBJECT TO DAMAGE FROM			WINTER DESIGN TEMP[e]	ICE BARRIER UNDERLAYMENT REQUIRED[h]	FLOOD HAZARDS[g]	AIR FREEZING INDEX[i]	MEAN ANNUAL TEMP[j]
	Speed[d] (mph)	Topographic effects[k]	Special wind region[l]	Wind-borne debris zone[m]		Weathering[a]	Frost line depth[b]	Termite[c]					

For SI: 1 pound per square foot = 0.0479 kPa, 1 mile per hour = 0.447 m/s.

a. Weathering may require a higher strength concrete or *grade* of masonry than necessary to satisfy the structural requirements of this code. The weathering column shall be filled in with the weathering index, "negligible," "moderate" or "severe" for concrete as determined from Figure R301.2(3). The *grade* of masonry units shall be determined from ASTM C 34, C 55, C 62, C 73, C 90, C 129, C 145, C 216 or C 652.

b. The frost line depth may require deeper footings than indicated in Figure R403.1(1). The *jurisdiction* shall fill in the frost line depth column with the minimum depth of footing below finish *grade*.

c. The *jurisdiction* shall fill in this part of the table to indicate the need for protection depending on whether there has been a history of local subterranean termite damage.

d. The *jurisdiction* shall fill in this part of the table with the wind speed from the basic wind speed map [Figure R301.2(4)A]. Wind exposure category shall be determined on a site-specific basis in accordance with Section R301.2.1.4.

e. The outdoor design dry-bulb temperature shall be selected from the columns of $97^1/_2$-percent values for winter from Appendix D of the *International Plumbing Code*. Deviations from the Appendix D temperatures shall be permitted to reflect local climates or local weather experience as determined by the *building official*.

f. The *jurisdiction* shall fill in this part of the table with the seismic design category determined from Section R301.2.2.1.

g. The *jurisdiction* shall fill in this part of the table with (a) the date of the *jurisdiction's* entry into the National Flood Insurance Program (date of adoption of the first code or ordinance for management of flood hazard areas), (b) the date(s) of the Flood Insurance Study and (c) the panel numbers and dates of the currently effective FIRMs and FBFMs or other flood hazard map adopted by the authority having *jurisdiction*, as amended.

h. In accordance with Sections R905.1.2, R905.4.3.1, R905.5.3.1, R905.6.3.1, R905.7.3.1 and R905.8.3.1, where there has been a history of local damage from the effects of ice damming, the *jurisdiction* shall fill in this part of the table with "YES." Otherwise, the *jurisdiction* shall fill in this part of the table with "NO."

i. The *jurisdiction* shall fill in this part of the table with the 100-year return period air freezing index (BF-days) from Figure R403.3(2) or from the 100-year (99 percent) value on the National Climatic Data Center data table "Air Freezing Index-USA Method (Base 32°F)."

j. The *jurisdiction* shall fill in this part of the table with the mean annual temperature from the National Climatic Data Center data table "Air Freezing Index-USA Method (Base 32°F)."

k. In accordance with Section R301.2.1.5, where there is local historical data documenting structural damage to buildings due to topographic wind speed-up effects, the *jurisdiction* shall fill in this part of the table with "YES." Otherwise, the *jurisdiction* shall indicate "NO" in this part of the table.

l. In accordance with Figure R301.2(4)A, where there is local historical data documenting unusual wind conditions, the *jurisdiction* shall fill in this part of the table with "YES" and identify any specific requirements. Otherwise, the *jurisdiction* shall indicate "NO" in this part of the table.

m. In accordance with Section R301.2.1.2.1, the *jurisdiction* shall indicate the wind-borne debris wind zone(s). Otherwise, the *jurisdiction* shall indicate "NO" in this part of the table.

TABLE R301.2(2)
COMPONENT AND CLADDING LOADS FOR A BUILDING WITH A MEAN ROOF HEIGHT OF 30 FEET LOCATED IN EXPOSURE B (ASD) (psf)[a, b, c, d, e]

	ZONE	EFFECTIVE WIND AREA (feet²)	ULTIMATE DESIGN WIND SPEED, V_{ULT} (mph)																	
			110		115		120		130		140		150		160		170		180	
Roof 0 to 7 degrees	1	10	10.0	-13.0	10.0	-14.0	10.0	-15.0	10.0	-18.0	10.0	-21.0	9.9	-24.0	11.2	-27.0	12.6	-31.0	14.2	-35.0
	1	20	10.0	-12.0	10.0	-13.0	10.0	-15.0	10.0	-17.0	10.0	-20.0	9.2	-23.0	10.6	-26.0	11.9	-30.0	13.3	-34.1
	1	50	10.0	-12.0	10.0	-13.0	10.0	-14.0	10.0	-17.0	10.0	-19.0	8.5	-22.0	10.0	-26.0	10.8	-29.0	12.2	-32.9
	1	100	10.0	-11.0	10.0	-13.0	10.0	-14.0	10.0	-16.0	10.0	-19.0	7.8	-22.0	10.0	-25.0	10.0	-28.0	11.3	-32.0
	2	10	10.0	-21.0	10.0	-23.0	10.0	-26.0	10.0	-30.0	10.0	-35.0	9.9	-40.0	11.2	-46.0	12.6	-52.0	14.2	-58.7
	2	20	10.0	-19.0	10.0	-21.0	10.0	-23.0	10.0	-27.0	10.0	-31.0	9.2	-36.0	10.6	-41.0	11.9	-46.0	13.3	-52.4
	2	50	10.0	-16.0	10.0	-18.0	10.0	-19.0	10.0	-23.0	10.0	-26.0	8.5	-30.0	10.0	-34.0	10.8	-39.0	12.2	-44.1
	2	100	10.0	-14.0	10.0	-15.0	10.0	-16.0	10.0	-19.0	10.0	-22.0	7.8	-26.0	10.0	-30.0	10.0	-33.0	11.3	-37.9
	3	10	10.0	-33.0	10.0	-36.0	10.0	-39.0	10.0	-46.0	10.0	-53.0	9.9	-61.0	11.2	-69.0	12.6	-78.0	14.2	-88.3
	3	20	10.0	-27.0	10.0	-29.0	10.0	-32.0	10.0	-38.0	10.0	-44.0	9.2	-50.0	10.6	-57.0	11.9	-65.0	13.3	-73.1
	3	50	10.0	-19.0	10.0	-21.0	10.0	-23.0	10.0	-27.0	10.0	-32.0	8.5	-36.0	10.0	-41.0	10.8	-47.0	12.2	-53.1
	3	100	10.0	-14.0	10.0	-15.0	10.0	-16.0	10.0	-19.0	10.0	-22.0	7.8	-26.0	10.0	-30.0	10.0	-33.0	11.3	-37.9
Roof > 7 to 27 degrees	1	10	10.0	-11.0	10.0	-13.0	10.0	-14.0	10.5	-16.0	12.2	-19.0	14.0	-22.0	15.9	-25.0	17.9	-28.0	20.2	-32.0
	1	20	10.0	-11.0	10.0	-12.0	10.0	-13.0	10.0	-16.0	11.1	-18.0	12.8	-21.0	14.5	-24.0	16.4	-27.0	18.4	-31.1
	1	50	10.0	-11.0	10.0	-12.0	10.0	-13.0	10.0	-15.0	10.0	-18.0	11.1	-20.0	12.7	-23.0	14.3	-26.0	16.0	-29.9
	1	100	10.0	-10.0	10.0	-11.0	10.0	-12.0	10.0	-15.0	10.0	-17.0	9.9	-20.0	11.2	-22.0	12.6	-25.0	14.2	-29.0
	2	10	10.0	-20.0	10.0	-22.0	10.0	-24.0	10.5	-29.0	12.2	-33.0	14.0	-38.0	15.9	-44.0	17.9	-49.0	20.2	-55.8
	2	20	10.0	-19.0	10.0	-20.0	10.0	-22.0	10.0	-26.0	11.1	-31.0	12.8	-35.0	14.5	-40.0	16.4	-45.0	18.4	-51.2
	2	50	10.0	-16.0	10.0	-18.0	10.0	-20.0	10.0	-23.0	10.0	-27.0	11.1	-31.0	12.7	-35.0	14.3	-40.0	16.0	-45.4
	2	100	10.0	-15.0	10.0	-16.0	10.0	-18.0	10.0	-21.0	10.0	-24.0	9.9	-28.0	11.2	-32.0	12.6	-36.0	14.2	-40.9
	3	10	10.0	-30.0	10.0	-33.0	10.0	-36.0	10.5	-43.0	12.2	-49.0	14.0	-57.0	15.9	-65.0	17.9	-73.0	20.2	-82.4
	3	20	10.0	-28.0	10.0	-31.0	10.0	-34.0	10.0	-40.0	11.1	-46.0	12.8	-53.0	14.5	-60.0	16.4	-68.0	18.4	-77.0
	3	50	10.0	-26.0	10.0	-28.0	10.0	-31.0	10.0	-36.0	10.0	-42.0	11.1	-48.0	12.7	-55.0	14.3	-62.0	16.0	-69.9
	3	100	10.0	-24.0	10.0	-26.0	10.0	-28.0	10.0	-33.0	10.0	-39.0	9.9	-44.0	11.2	-51.0	12.6	-57.0	14.2	-64.6
Roof > 27 to 45 degrees	1	10	11.9	-13.0	13.1	-14.0	14.2	-15.0	16.7	-18.0	19.4	-21.0	22.2	-24.0	25.3	-27.0	28.5	-31.0	32.0	-35.0
	1	20	11.6	-12.0	12.7	-13.0	13.8	-14.0	16.2	-17.0	18.8	-20.0	21.6	-23.0	24.6	-26.0	27.7	-29.0	31.1	-33.2
	1	50	11.2	-11.0	12.2	-12.0	13.3	-13.0	15.6	-16.0	18.1	-18.0	20.8	-21.0	23.6	-24.0	26.7	-27.0	29.9	-30.8
	1	100	10.9	-10.0	11.9	-11.0	12.9	-12.0	15.1	-15.0	17.6	-17.0	20.2	-20.0	22.9	-22.0	25.9	-25.0	29.0	-29.0
	2	10	11.9	-15.0	13.1	-16.0	14.2	-18.0	16.7	-21.0	19.4	-24.0	22.2	-28.0	25.3	-32.0	28.5	-36.0	32.0	-40.9
	2	20	11.6	-14.0	12.7	-16.0	13.8	-17.0	16.2	-20.0	18.8	-23.0	21.6	-27.0	24.6	-30.0	27.7	-34.0	31.1	-39.1
	2	50	11.2	-13.0	12.2	-15.0	13.3	-16.0	15.6	-19.0	18.1	-22.0	20.8	-25.0	23.6	-29.0	26.7	-32.0	29.9	-36.8
	2	100	10.9	-13.0	11.9	-14.0	12.9	-15.0	15.1	-18.0	17.6	-21.0	20.2	-24.0	22.9	-27.0	25.9	-31.0	29.0	-35.0
	3	10	11.9	-15.0	13.1	-16.0	14.2	-18.0	16.7	-21.0	19.4	-24.0	22.2	-28.0	25.3	-32.0	28.5	-36.0	32.0	-40.9
	3	20	11.6	-14.0	12.7	-16.0	13.8	-17.0	16.2	-20.0	18.8	-23.0	21.6	-27.0	24.6	-30.0	27.7	-34.0	31.1	-39.1
	3	50	11.2	-13.0	12.2	-15.0	13.3	-16.0	15.6	-19.0	18.1	-22.0	20.8	-25.0	23.6	-29.0	26.7	-32.0	29.9	-36.8
	3	100	10.9	-13.0	11.9	-14.0	12.9	-15.0	15.1	-18.0	17.6	-21.0	20.2	-24.0	22.9	-27.0	25.9	-31.0	29.0	-35.0
Wall	4	10	13.1	-14.0	14.3	-15.0	15.5	-16.0	18.2	-19.0	21.2	-22.0	24.3	-26.0	27.7	-30.0	31.2	-33.0	35.0	-37.9
	4	20	12.5	-13.0	13.6	-14.0	14.8	-16.0	17.4	-19.0	20.2	-22.0	23.2	-25.0	26.4	-28.0	29.7	-32.0	33.4	-36.4
	4	50	11.7	-12.0	12.8	-14.0	13.9	-15.0	16.3	-17.0	19.0	-20.0	21.7	-23.0	24.7	-27.0	27.9	-30.0	31.3	-34.3
	4	100	11.1	-12.0	12.1	-13.0	13.2	-14.0	15.5	-17.0	18.0	-19.0	20.6	-22.0	23.5	-25.0	26.5	-29.0	29.8	32.7
	4	500	10.0	-10.0	10.6	-11.0	11.6	-12.0	13.6	-15.0	15.8	-17.0	18.1	-20.0	20.6	-22.0	23.2	-25.0	26.1	-29.0
	5	10	13.1	-17.0	14.3	-19.0	15.5	-20.0	18.2	-24.0	21.2	-28.0	24.3	-32.0	27.7	-37.0	31.2	-41.0	35.0	-46.8
	5	20	12.5	-16.0	13.6	-17.0	14.8	-19.0	17.4	-22.0	20.2	-26.0	23.2	-30.0	26.4	-34.0	29.7	-39.0	33.4	-43.7
	5	50	11.7	-14.0	12.8	-16.0	13.9	-17.0	16.3	-20.0	19.0	-23.0	21.7	-27.0	24.7	-31.0	27.9	-35.0	31.3	-39.5
	5	100	11.1	-13.0	12.1	-14.0	13.2	-16.0	15.5	-19.0	18.0	-22.0	20.6	-25.0	23.5	-28.0	26.5	-32.0	29.8	-36.4
	5	500	10.0	-10.0	10.6	-11.0	11.6	-12.0	13.6	-15.0	15.8	-17.0	18.1	-20.0	20.6	-22.0	23.2	-25.0	26.1	-29.0

For SI: 1 foot = 304.8 mm, 1 square foot = 0.0929 m², 1 mile per hour = 0.447 m/s, 1 pound per square foot = 0.0479 kPa.

a. The effective wind area shall be equal to the span length multiplied by an effective width. This width shall be permitted to be not less than one-third the span length. For cladding fasteners, the effective wind area shall not be greater than the area that is tributary to an individual fastener.

b. For effective areas between those given, the load shall be interpolated or the load associated with the lower effective area shall be used.

c. Table values shall be adjusted for height and exposure by multiplying by the adjustment coefficient in Table R301.2(3).

d. See Figure R301.2(7) for location of zones.

e. Plus and minus signs signify pressures acting toward and away from the building surfaces.

TABLE R301.2(3)
HEIGHT AND EXPOSURE ADJUSTMENT COEFFICIENTS FOR TABLE R301.2(2)

MEAN ROOF HEIGHT	EXPOSURE		
	B	C	D
15	1.00	1.21	1.47
20	1.00	1.29	1.55
25	1.00	1.35	1.61
30	1.00	1.40	1.66
35	1.05	1.45	1.70
40	1.09	1.49	1.74
45	1.12	1.53	1.78
50	1.16	1.56	1.81
55	1.19	1.59	1.84
60	1.22	1.62	1.87

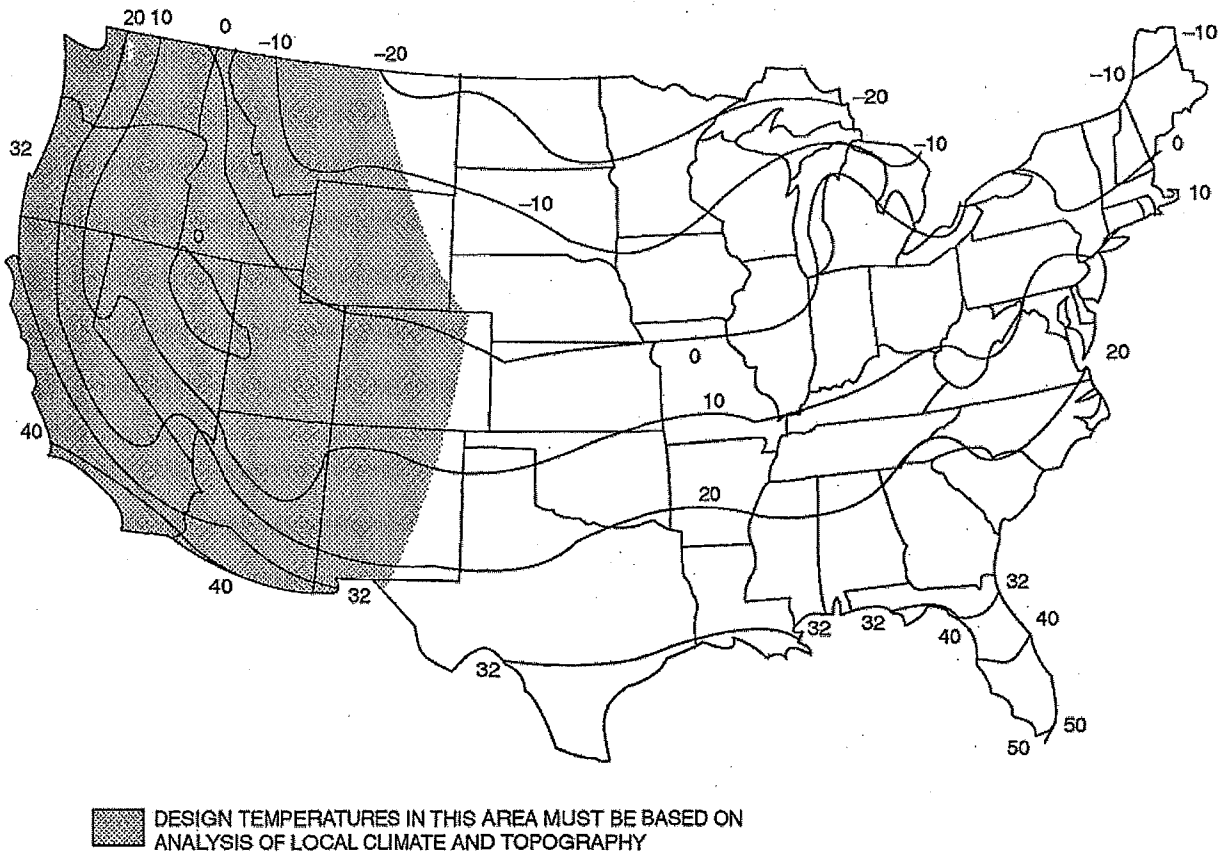

For SI: °C = [(°F)-32]/1.8.

FIGURE R301.2(1)
ISOLINES OF THE 97½-PERCENT WINTER (DECEMBER, JANUARY AND FEBRUARY) DESIGN TEMPERATURES (°F)

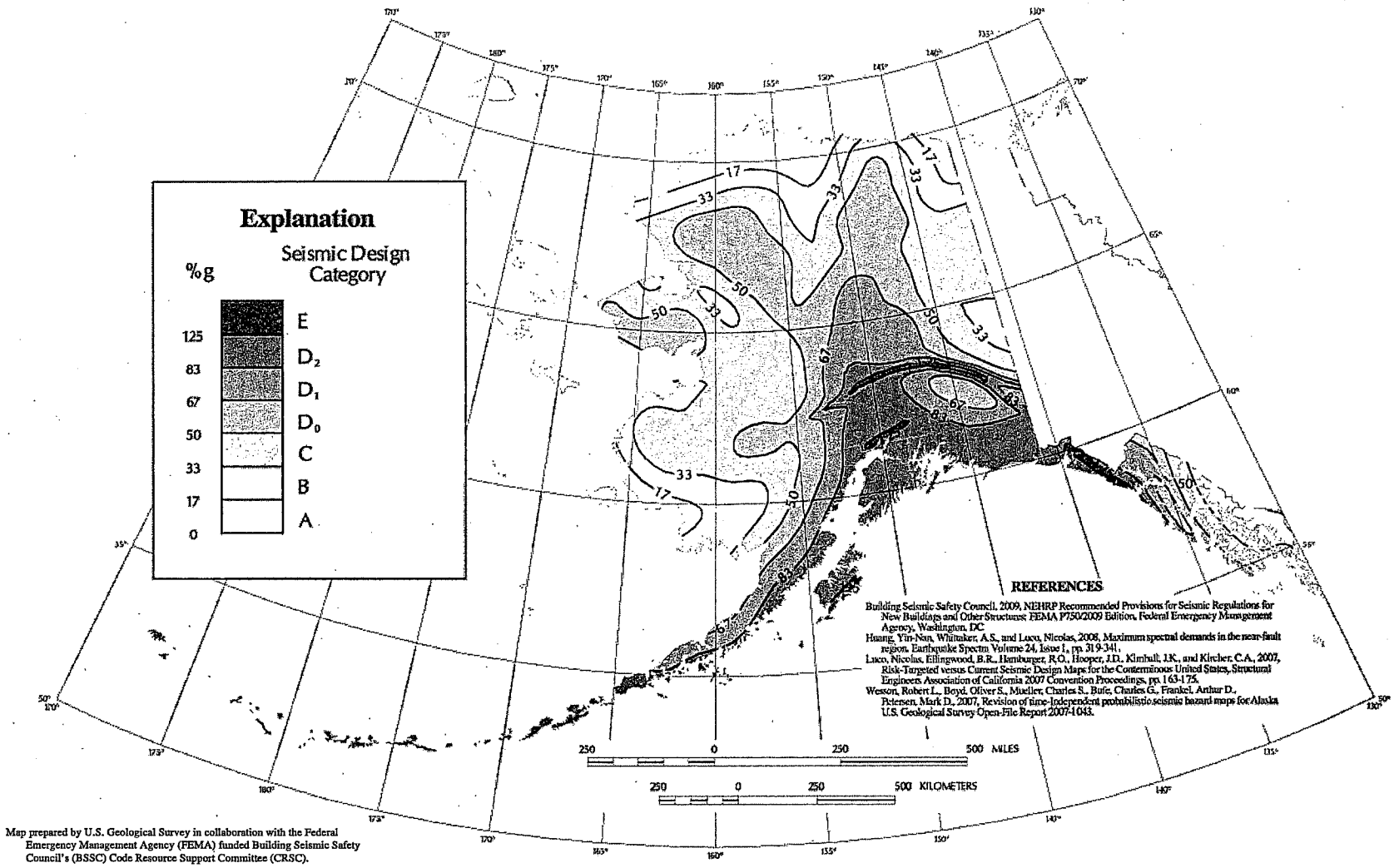

Map prepared by U.S. Geological Survey in collaboration with the Federal Emergency Management Agency (FEMA) funded Building Seismic Safety Council's (BSSC) Code Resource Support Committee (CRSC).

FIGURE R301.2(2)
SEISMIC DESIGN CATEGORIES—SITE CLASS D

(continued)

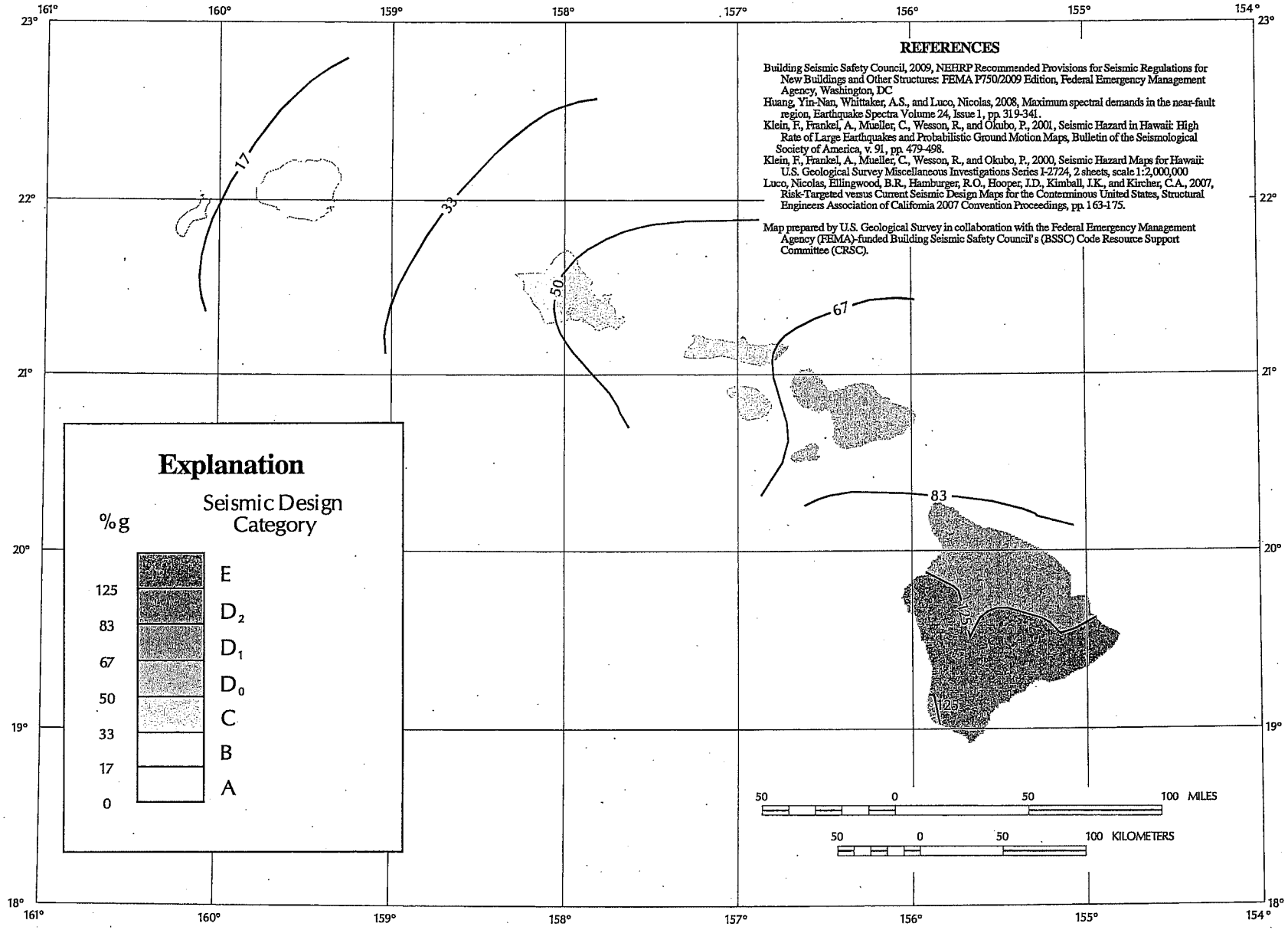

REFERENCES

Building Seismic Safety Council, 2009, NEHRP Recommended Provisions for Seismic Regulations for New Buildings and Other Structures: FEMA P750/2009 Edition, Federal Emergency Management Agency, Washington, DC

Huang, Yin-Nan, Whittaker, A.S., and Luco, Nicolas, 2008, Maximum spectral demands in the near-fault region, Earthquake Spectra Volume 24, Issue 1, pp. 319-341.

Klein, F., Frankel, A., Mueller, C., Wesson, R., and Okubo, P., 2001, Seismic Hazard in Hawaii: High Rate of Large Earthquakes and Probabilistic Ground Motion Maps, Bulletin of the Seismological Society of America, v. 91, pp. 479-498.

Klein, F., Frankel, A., Mueller, C., Wesson, R., and Okubo, P., 2000, Seismic Hazard Maps for Hawaii: U.S. Geological Survey Miscellaneous Investigations Series I-2724, 2 sheets, scale 1:2,000,000

Luco, Nicolas, Ellingwood, B.R., Hamburger, R.O., Hooper, J.D., Kimball, J.K., and Kircher, C.A., 2007, Risk-Targeted versus Current Seismic Design Maps for the Conterminous United States, Structural Engineers Association of California 2007 Convention Proceedings, pp. 163-175.

Map prepared by U.S. Geological Survey in collaboration with the Federal Emergency Management Agency (FEMA)-funded Building Seismic Safety Council's (BSSC) Code Resource Support Committee (CRSC).

FIGURE R301.2(2)—continued
SEISMIC DESIGN CATEGORIES—SITE CLASS D

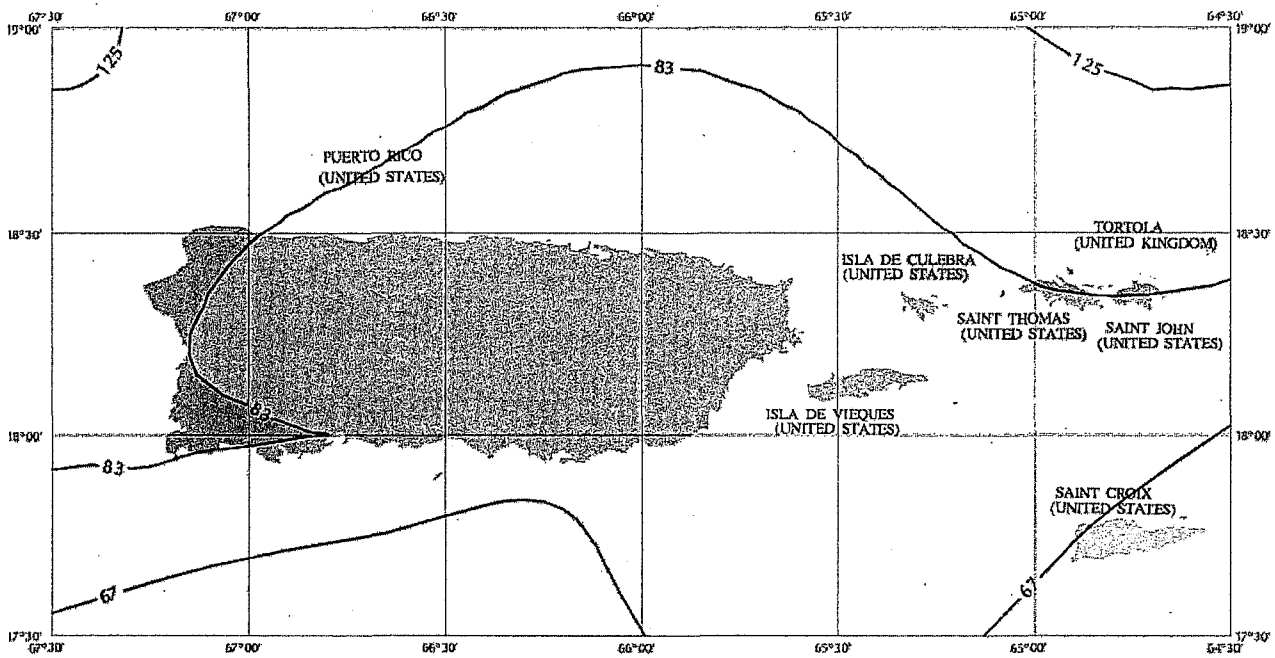

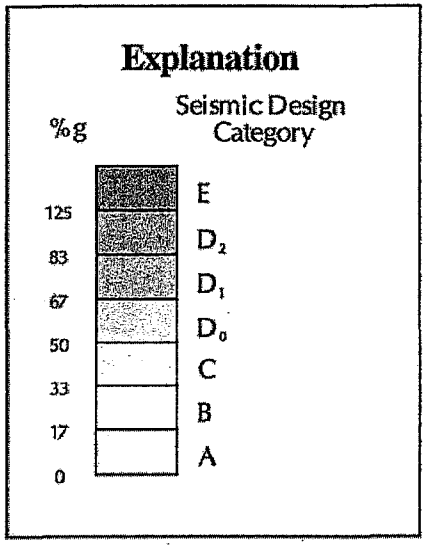

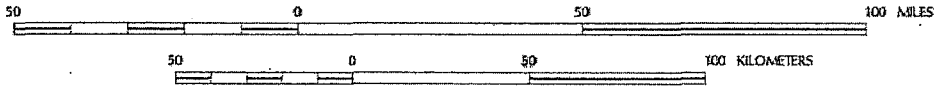

REFERENCES

Building Seismic Safety Council, 2009, NEHRP Recommended Provisions for Seismic Regulations for New Buildings and Other Structures: FEMA P750/2009 Edition, Federal Emergency Management Agency, Washington, DC

Huang, Yin-Nan, Whittaker, A.S., and Luco, Nicolas, 2008, Maximum spectral demands in the near-fault region, Earthquake Spectra Volume 24, Issue 1, pp. 319-341.

Luco, Nicolas, Ellingwood, B.R., Hamburger, R.O., Hooper, J.D., Kimball, J.K., and Kircher, C.A., 2007, Risk-Targeted versus Current Seismic Design Maps for the Conterminous United States, Structural Engineers Association of California 2007 Convention Proceedings, pp. 163-175.

Mueller, C., Frankel, A., Petersen, M., and Leyendecker, E., 2003, Documentation for 2003 USGS Seismic Hazard Maps for Puerto Rico and the U.S. Virgin Islands, U.S. Geological Survey Open-File Report 03-379.

Map prepared by U.S. Geological Survey in collaboration with the Federal Emergency Management Agency (FEMA)-funded Building Seismic Safety Council's (BSSC) Code Resource Support Committee (CRSC).

FIGURE R301.2(2)—continued
SEISMIC DESIGN CATEGORIES—SITE CLASS D

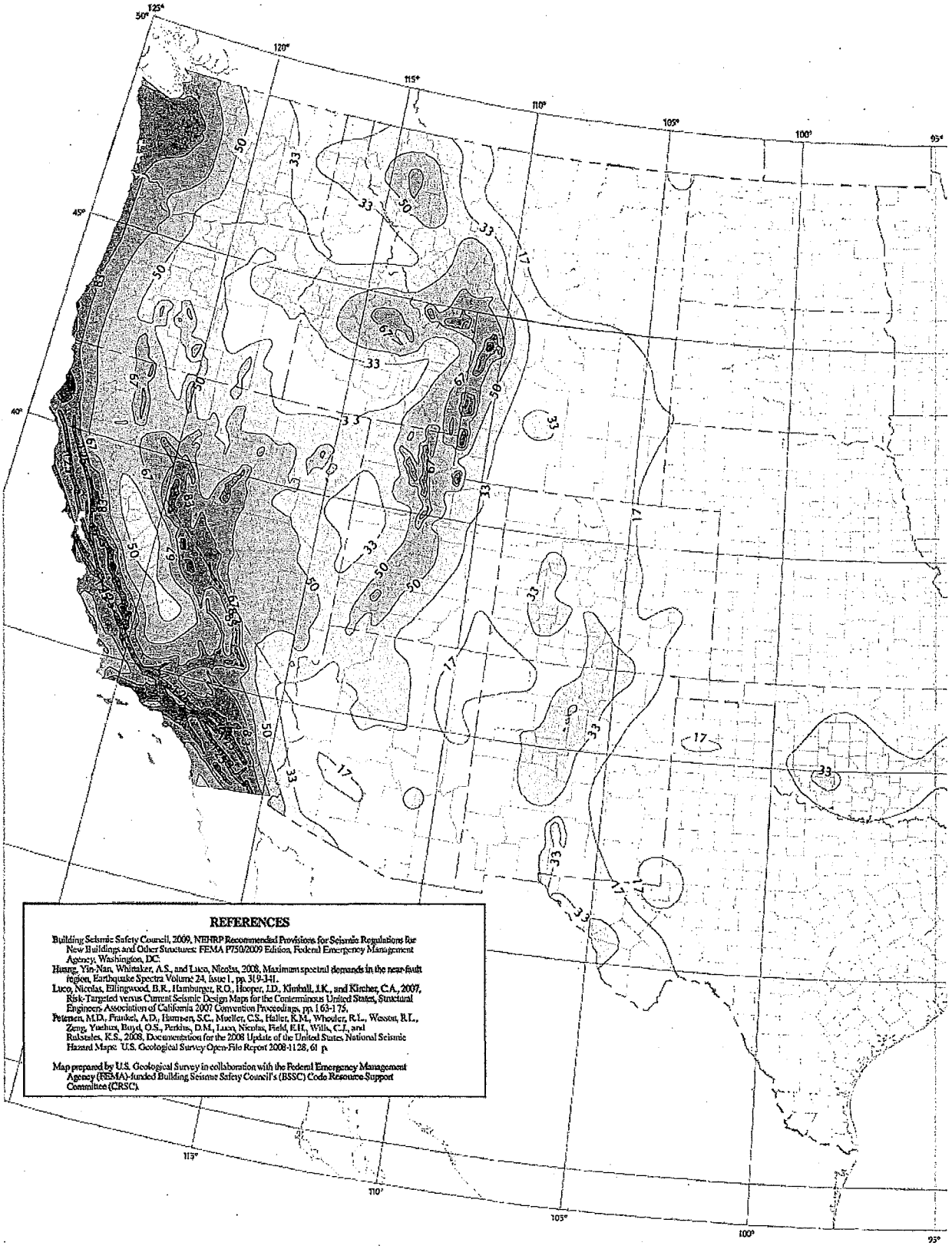

FIGURE R301.2(2)—continued
SEISMIC DESIGN CATEGORIES—SITE CLASS D

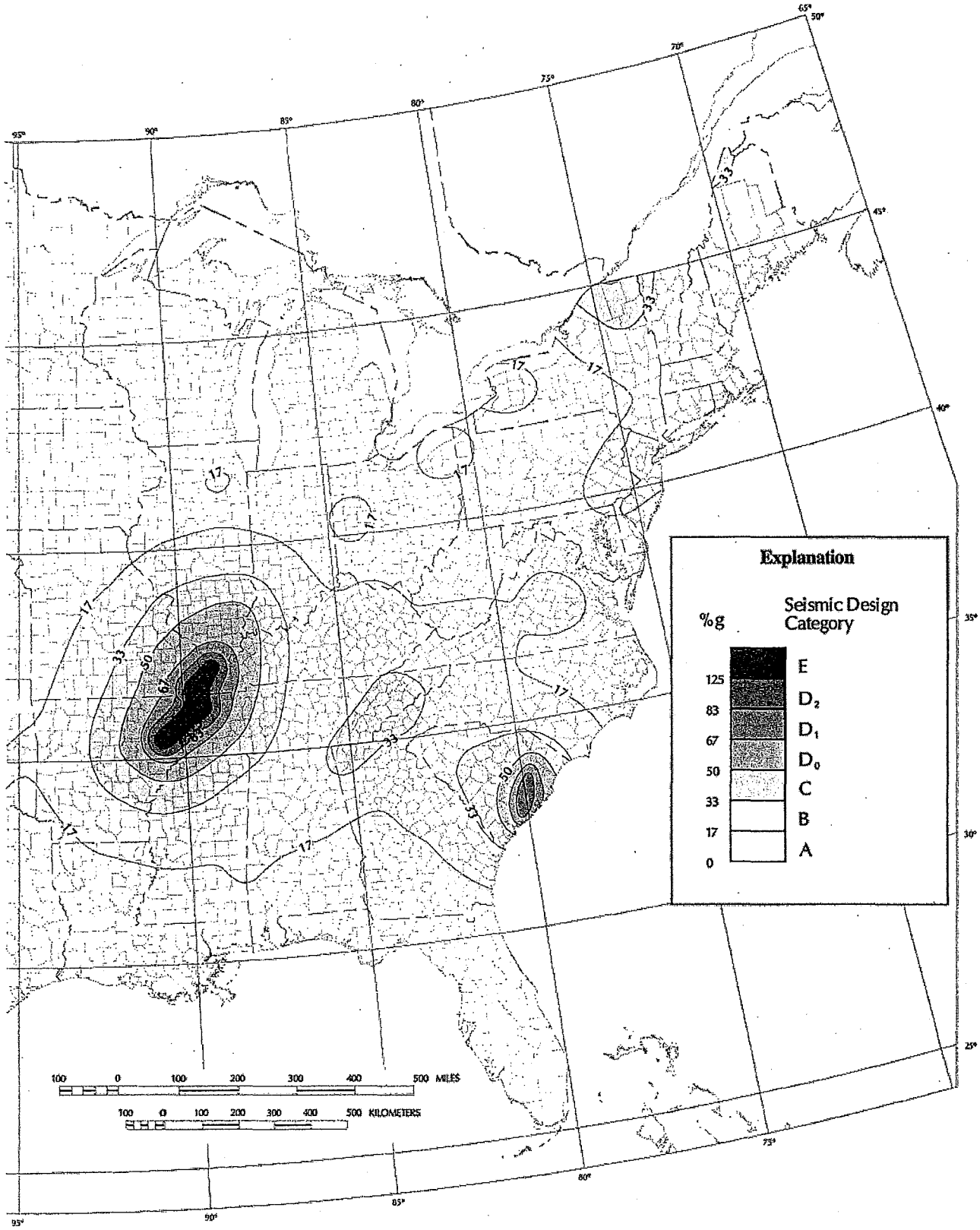

FIGURE R301.2(2)—continued
SEISMIC DESIGN CATEGORIES—SITE CLASS D

2502

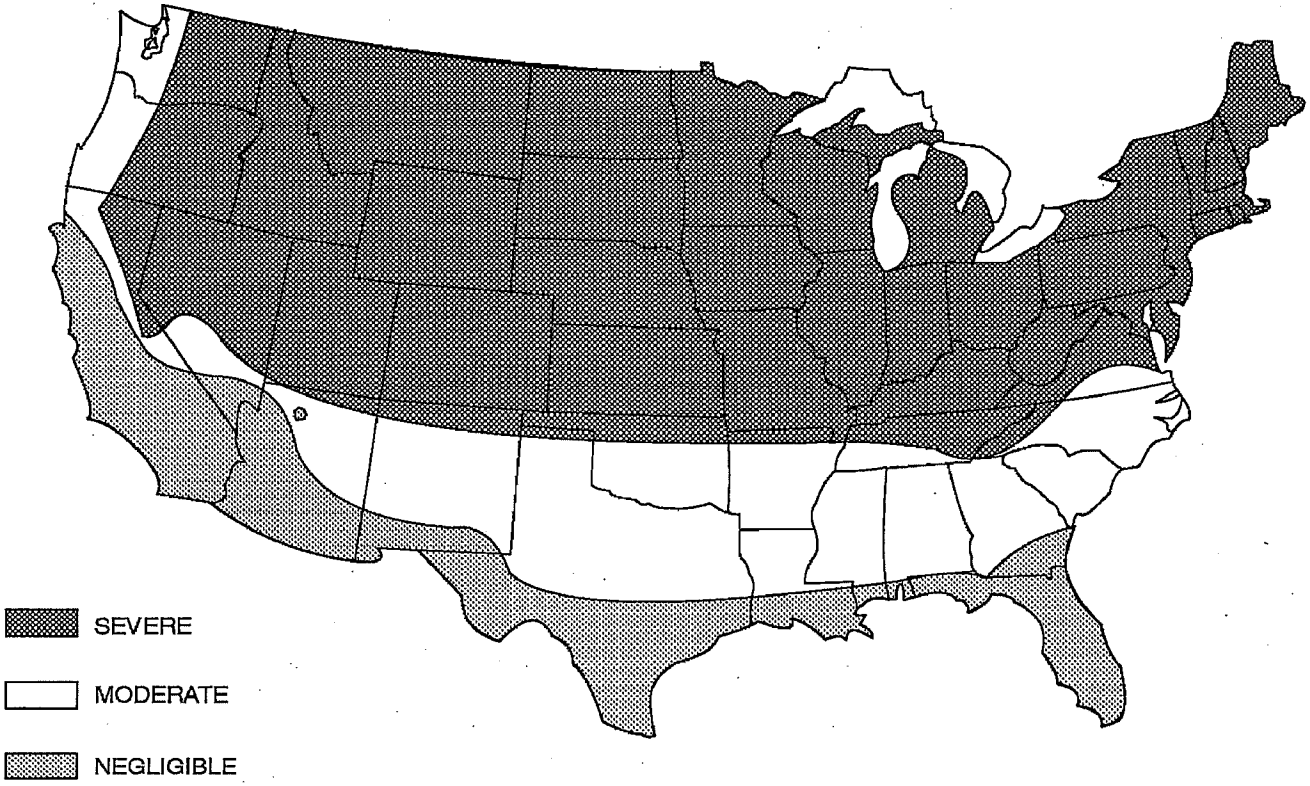

a. Alaska and Hawaii are classified as severe and negligible, respectively.
b. Lines defining areas are approximate only. Local conditions may be more or less severe than indicated by region classification. A severe classification is where weather conditions result in significant snowfall combined with extended periods during which there is little or no natural thawing causing deicing salts to be used extensively.

FIGURE R301.2(3)
WEATHERING PROBABILITY MAP FOR CONCRETE[a, b]

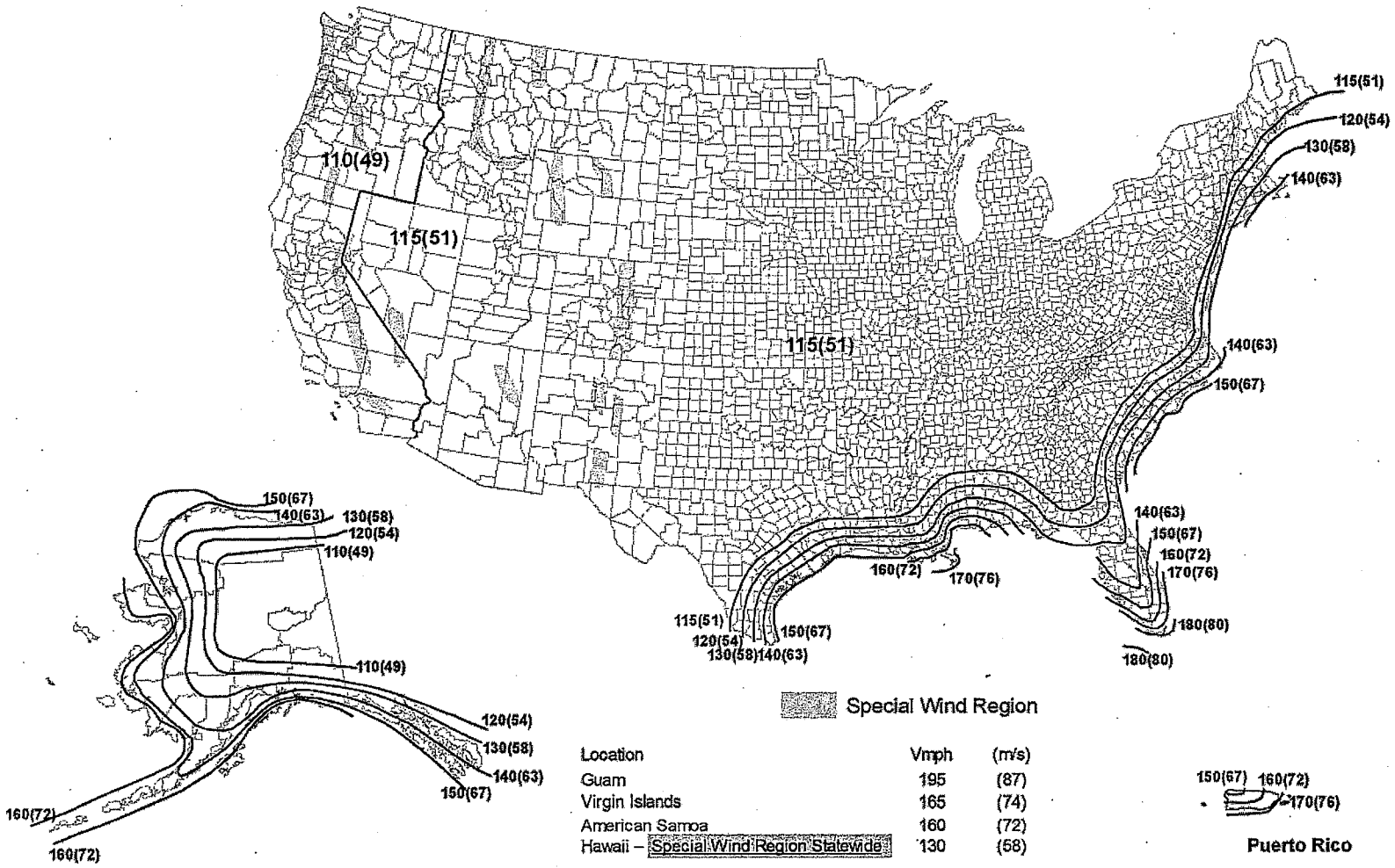

Location	Vmph	(m/s)
Guam	195	(87)
Virgin Islands	165	(74)
American Samoa	160	(72)
Hawaii – Special Wind Region Statewide	130	(58)

Notes:

1. Values are nominal design 3-second gust wind speeds in miles per hour (m/s) at 33 ft (10m) above ground for Exposure C category.
2. Linear interpolation between contours is permitted.
3. Islands and coastal areas outside the last contour shall use the last wind speed contour of the coastal area.
4. Mountainous terrain, gorges, ocean promontories, and special wind regions shall be examined for unusual wind conditions.
5. Wind speeds correspond to approximately a 7% probability of exceedance in 50 years (Annual Exceedance Probability = 0.00143, MRI = 700 Years).

FIGURE R301.2(4)A
ULTIMATE DESIGN WIND SPEEDS

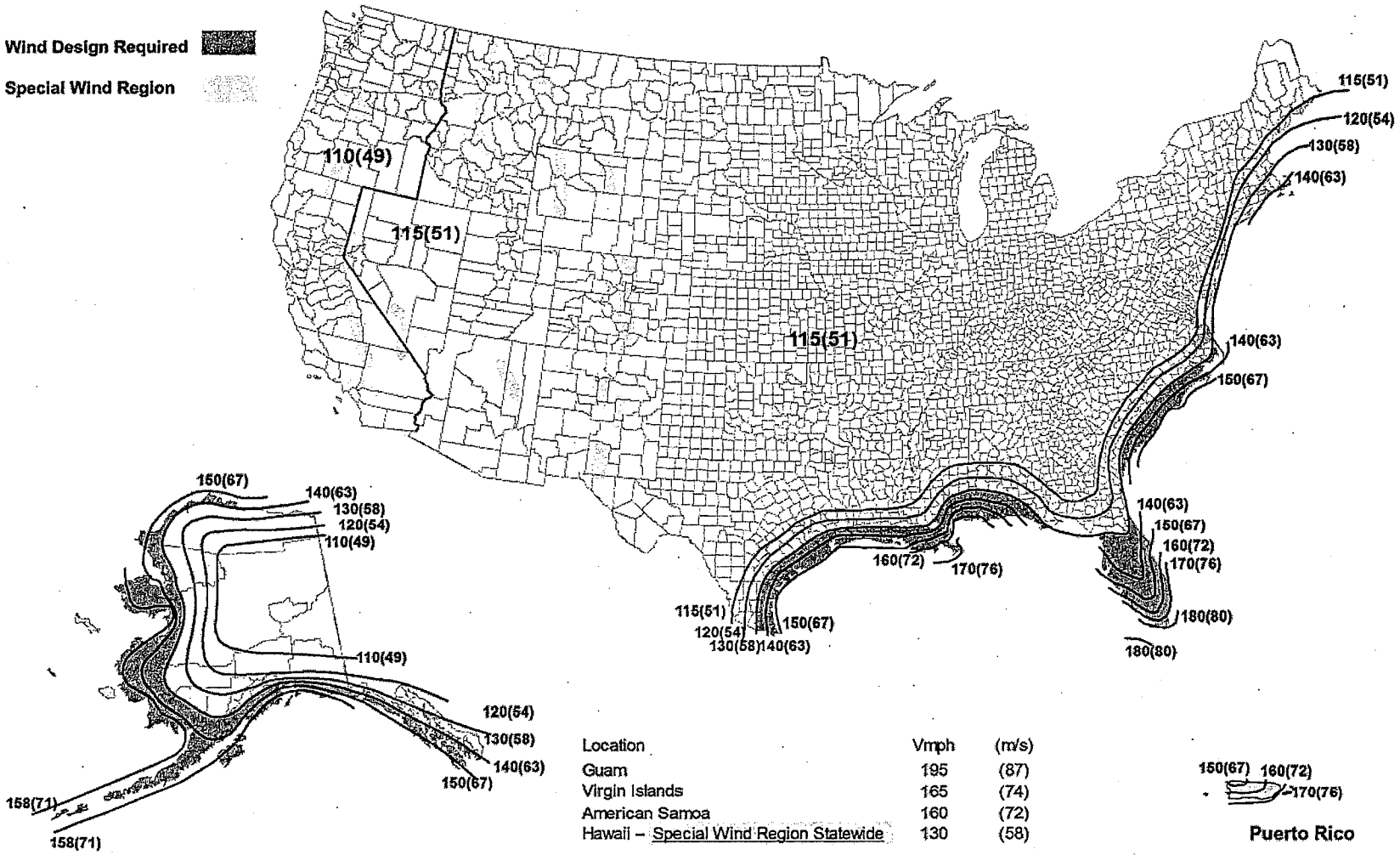

Location	Vmph	(m/s)
Guam	195	(87)
Virgin Islands	165	(74)
American Samoa	160	(72)
Hawaii – Special Wind Region Statewide	130	(58)

Notes:

1. Values are nominal design 3-second gust wind speeds in miles per hour (m/s) at 33 ft (10m) above ground for Exposure C category.
2. Linear interpolation between contours is permitted.
3. Islands and coastal areas outside the last contour shall use the last wind speed contour of the coastal area.
4. Mountainous terrain, gorges, ocean promontories, and special wind regions shall be examined for unusual wind conditions.
5. Wind speeds correspond to approximately a 7% probability of exceedance in 50 years (Annual Exceedance Probability = 0.00143, MRI = 700 Years).

FIGURE R301.2(4)B
REGIONS WHERE WIND DESIGN IS REQUIRED

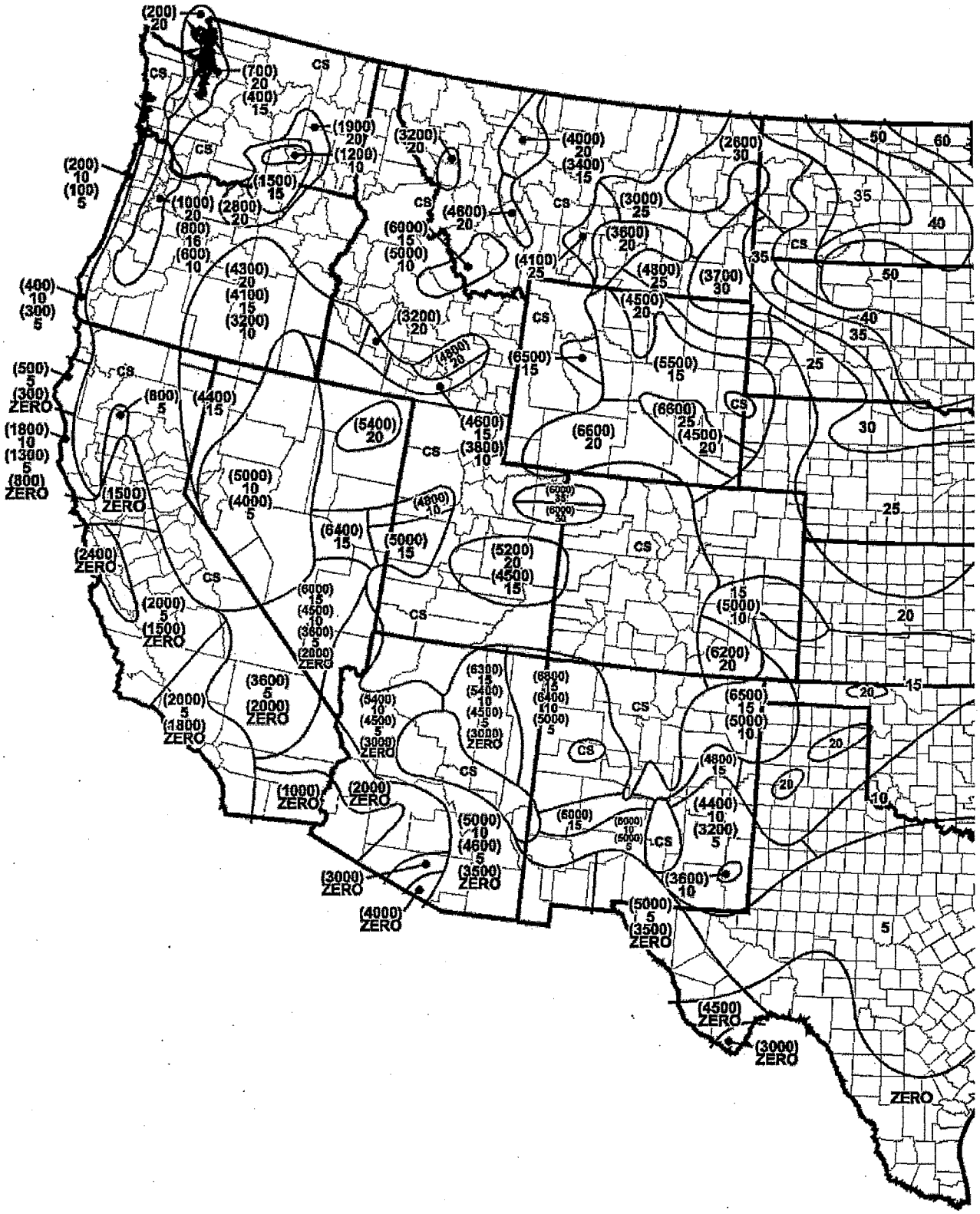

FIGURE R301.2(5)
GROUND SNOW LOADS, P_g, FOR THE UNITED STATES (lb/ft^2)
(continued)

2506

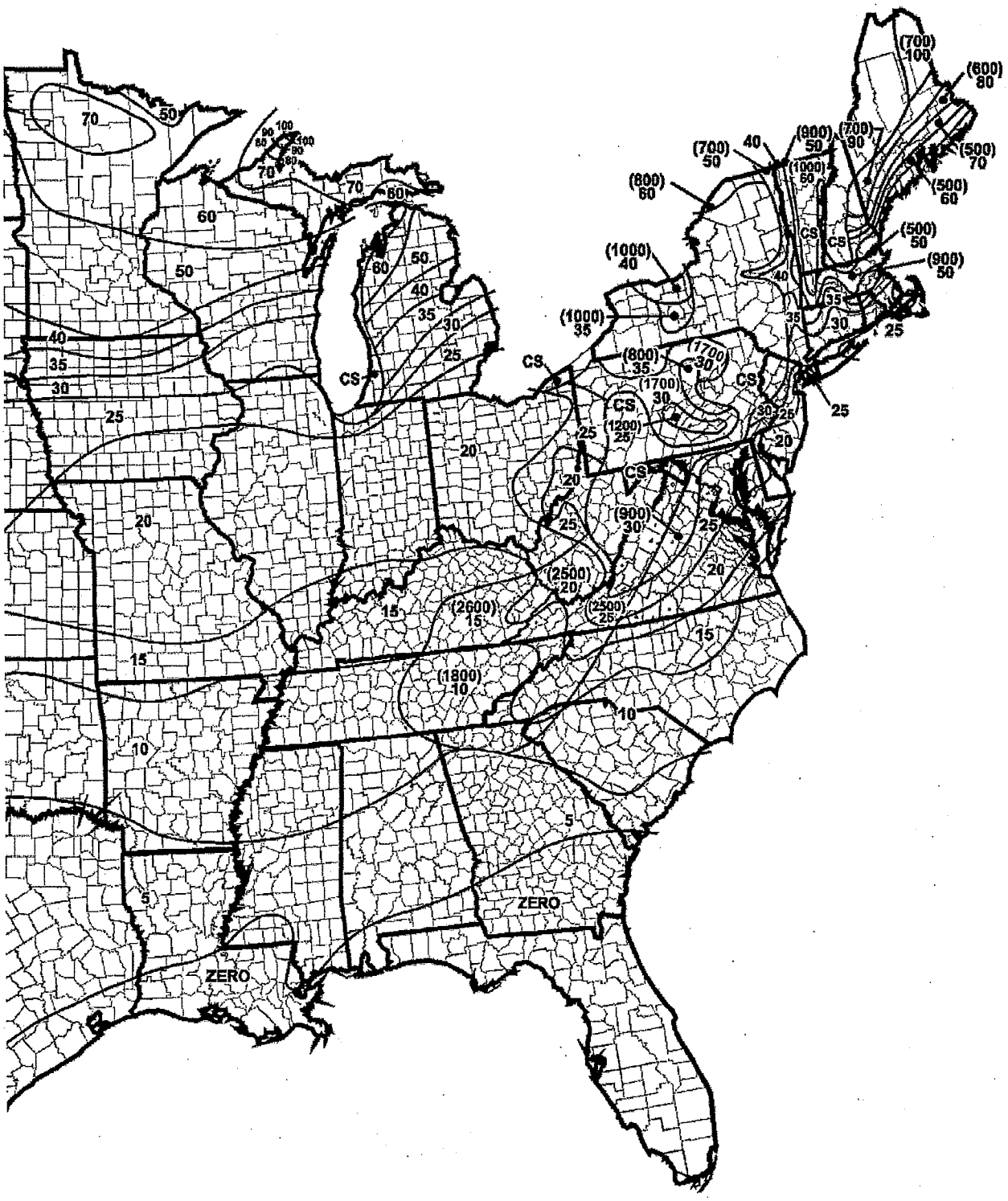

For SI: 1 foot = 304.8 mm, 1 pound per square foot = 0.0479 kPa.

FIGURE R301.2(5)—continued
GROUND SNOW LOADS, P_g, FOR THE UNITED STATES (lb/ft^2)

2507

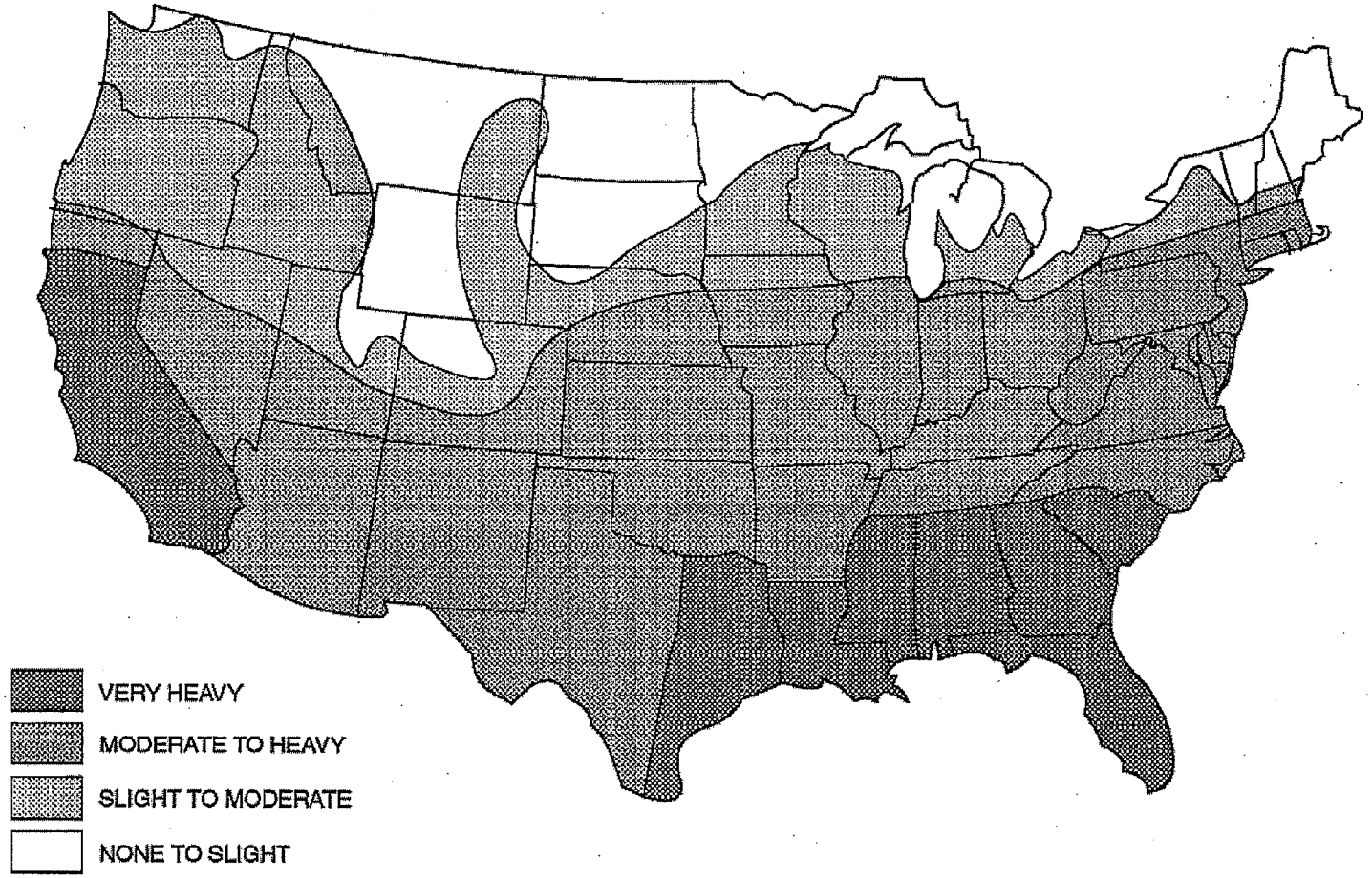

Note: Lines defining areas are approximate only. Local conditions may be more or less severe than indicated by the region classification.

FIGURE R301.2(6)
TERMITE INFESTATION PROBABILITY MAP

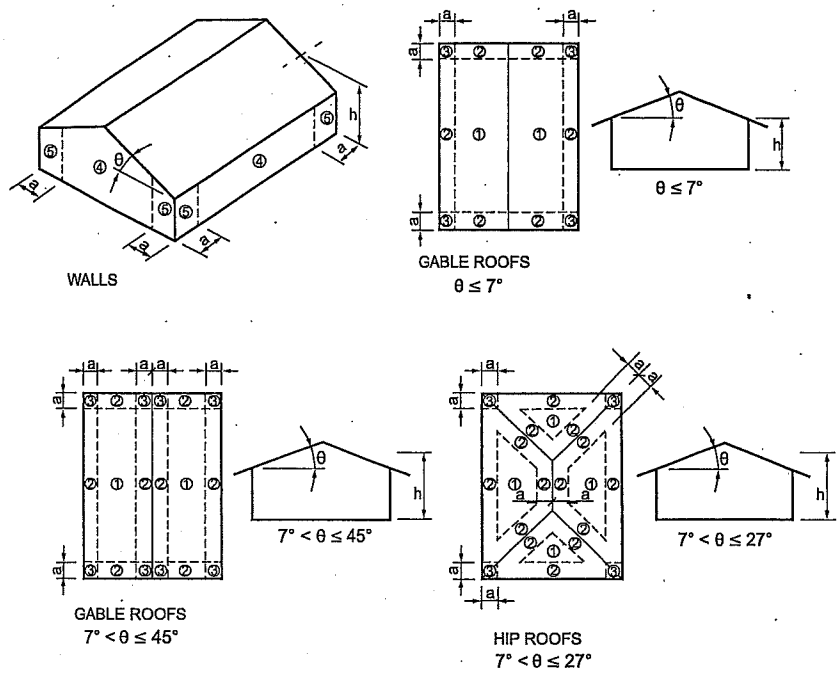

For SI: 1 foot = 304.8 mm, 1 degree = 0.0175 rad.
Note: a = 4 feet in all cases.

FIGURE R301.2(7)
COMPONENT AND CLADDING PRESSURE ZONES

R301.2.1.2.1 Application of ASTM E 1996. The text of Section 2.2 of ASTM E 1996 shall be substituted as follows:

2.2 ASCE Standard:

ASCE 7-10 American Society of Civil Engineers *Minimum Design Loads for Buildings and Other Structures*

The text of Section 6.2.2 of ASTM E 1996 shall be substituted as follows:

6.2.2 Unless otherwise specified, select the wind zone based on the ultimate design wind speed, V_{ult}, as follows:

6.2.2.1 Wind Zone 1–130 mph ≤ ultimate design wind speed, V_{ult} < 140 mph.

6.2.2.2 Wind Zone 2–140 mph ≤ ultimate design wind speed, V_{ult} < 150 mph at greater than 1 mile (1.6 km) from the coastline. The coastline shall be measured from the mean high water mark.

6.2.2.3 Wind Zone 3–150 mph (58 m/s) ≤ ultimate design wind speed, V_{ult} ≤ 170 mph (76 m/s), or 140 mph (54 m/s) ≤ ultimate design wind speed, V_{ult} ≤ 170 mph (76 m/s) and within 1 mile (1.6 km) of the coastline. The coastline shall be measured from the mean high water mark.

6.2.2.4 Wind Zone 4–ultimate design wind speed, V_{ult} > 170 mph (76 m/s).

TABLE R301.2.1.2
WINDBORNE DEBRIS PROTECTION FASTENING SCHEDULE FOR WOOD STRUCTURAL PANELS[a, b, c, d]

FASTENER TYPE	FASTENER SPACING (inches)[a, b]		
	Panel span ≤ 4 feet	4 feet < panel span ≤ 6 feet	6 feet < panel span ≤ 8 feet
No. 8 wood screw based anchor with 2-inch embedment length	16	10	8
No. 10 wood screw based anchor with 2-inch embedment length	16	12	9
$^1/_4$-inch lag screw based anchor with 2-inch embedment length	16	16	16

For SI: 1 inch = 25.4 mm, 1 foot = 304.8 mm, 1 pound = 4.448 N, 1 mile per hour = 0.447 m/s.

a. This table is based on 180 mph ultimate design wind speeds, V_{ult}, and a 33-foot *mean roof height*.

b. Fasteners shall be installed at opposing ends of the wood structural panel. Fasteners shall be located not less than 1 inch from the edge of the panel.

c. Anchors shall penetrate through the *exterior wall* covering with an embedment length of not less than 2 inches into the building frame. Fasteners shall be located not less than $2^1/_2$ inches from the edge of concrete block or concrete.

d. Panels attached to masonry or masonry/stucco shall be attached using vibration-resistant anchors having an ultimate withdrawal capacity of not less than 1,500 pounds.

TABLE R301.2.1.3
WIND SPEED CONVERSIONS[a]

V_{ult}	110	115	120	130	140	150	160	170	180	190	200
V_{asd}	85	89	93	101	108	116	124	132	139	147	155

For SI: 1 mile per hour = 0.447 m/s.

a. Linear interpolation is permitted.

R301.2.1.3 Wind speed conversion. Where referenced documents are based on nominal design wind speeds and do not provide the means for conversion between ultimate design wind speeds and nominal design wind speeds, the ultimate design wind speeds, V_{ult}, of Figure R301.2(4)A shall be converted to nominal design wind speeds, V_{asd}, using Table R301.2.1.3.

R301.2.1.4 Exposure category. For each wind direction considered, an exposure category that adequately reflects the characteristics of ground surface irregularities shall be determined for the site at which the building or structure is to be constructed. For a site located in the transition zone between categories, the category resulting in the largest wind forces shall apply. Account shall be taken of variations in ground surface roughness that arise from natural topography and vegetation as well as from constructed features. For a site where multiple detached one- and two-family *dwellings*, *townhouses* or other structures are to be constructed as part of a subdivision or master-planned community, or are otherwise designated as a developed area by the authority having jurisdiction, the exposure category for an individual structure shall be based upon the site conditions that will exist at the time when all adjacent structures on the site have been constructed, provided that their construction is expected to begin within one year of the start of construction for the structure for which the exposure category is determined. For any given wind direction, the exposure in which a specific building or other structure is sited shall be assessed as being one of the following categories:

1. Exposure B. Urban and suburban areas, wooded areas or other terrain with numerous closely spaced obstructions having the size of single-family *dwellings* or larger. Exposure B shall be assumed unless the site meets the definition of another type exposure.
2. Exposure C. Open terrain with scattered obstructions, including surface undulations or other irregularities, having heights generally less than 30 feet (9144 mm) extending more than 1,500 feet (457 m) from the building site in any quadrant. This exposure shall also apply to any building located within Exposure B type terrain where the building is directly adjacent to open areas of Exposure C type terrain in any quadrant for a distance of more than 600 feet (183 m). This category includes flat, open country and grasslands.
3. Exposure D. Flat, unobstructed areas exposed to wind flowing over open water, smooth mud flats, salt flats and unbroken ice for a distance of not less than 5,000 feet (1524 m). This exposure shall apply only to those buildings and other structures exposed to the wind coming from over the unobstructed area. Exposure D extends downwind from the edge of the unobstructed area a distance of 600 feet (183 m) or 20 times the height of the building or structure, whichever is greater.

R301.2.1.5 Topographic wind effects. In areas designated in Table R301.2(1) as having local historical data documenting structural damage to buildings caused by wind speed-up at isolated hills, ridges and escarpments that are abrupt changes from the general topography of the area, topographic wind effects shall be considered in the design of the building in accordance with Section R301.2.1.5.1 or in accordance with the provisions of ASCE 7. See Figure R301.2.1.5.1(1) for topographic features for wind speed-up effect.

In these designated areas, topographic wind effects shall apply only to buildings sited on the top half of an isolated hill, ridge or escarpment where all of the following conditions exist:

1. The average slope of the top half of the hill, ridge or escarpment is 10 percent or greater.
2. The hill, ridge or escarpment is 60 feet (18 288 mm) or greater in height for Exposure B, 30 feet (9144 mm) or greater in height for Exposure C, and 15 feet (4572 mm) or greater in height for Exposure D.
3. The hill, ridge or escarpment is isolated or unobstructed by other topographic features of similar height in the upwind direction for a distance measured from its high point of 100 times its height or 2 miles (3.2 km), whichever is less. See Figure R301.2.1.5.1(3) for upwind obstruction.
4. The hill, ridge or escarpment protrudes by a factor of two or more above the height of other upwind topographic features located in any quadrant within a radius of 2 miles (3.2 km) measured from its high point.

R301.2.1.5.1 Simplified topographic wind speed-up method. As an alternative to the ASCE 7 topographic wind provisions, the provisions of Section R301.2.1.5.1 shall be permitted to be used to design for wind speed-up effects, where required by Section R301.2.1.5.

Structures located on the top half of isolated hills, ridges or escarpments meeting the conditions of Section R301.2.1.5 shall be designed for an increased basic wind speed as determined by Table R301.2.1.5.1. On the high side of an escarpment, the increased basic wind speed shall extend horizontally downwind from the edge of the escarpment 1.5 times the horizontal length of the upwind slope (1.5L) or 6 times the height of the escarpment (6H), whichever is greater. See Figure R301.2.1.5.1(2) for where wind speed increase is applied.

TABLE R301.2.1.5.1
ULTIMATE DESIGN WIND SPEED MODIFICATION FOR TOPOGRAPHIC WIND EFFECT[a, b]

ULTIMATE DESIGN WIND SPEED FROM FIGURE R301.2(4)A (mph)	AVERAGE SLOPE OF THE TOP HALF OF HILL, RIDGE OR ESCARPMENT (percent)						
	0.10	0.125	0.15	0.175	0.20	0.23	0.25
	Required ultimate design wind speed-up, modified for topographic wind speed-up (mph)						
110	132	137	142	147	152	158	162
115	138	143	148	154	159	165	169
120	144	149	155	160	166	172	176
130	156	162	168	174	179	N/A	N/A
140	168	174	181	N/A	N/A	N/A	N/A
150	180	N/A	N/A	N/A	N/A	N/A	N/A

For SI: 1 mile per hour = 0.447 m/s, 1 foot = 304.8 mm.

a. Table applies to a feature height of 500 feet or less and dwellings sited a distance equal or greater than half the feature height.

b. Where the ultimate design wind speed as modified by Table R301.2.1.5.1 equals or exceeds 140 miles per hour, the building shall be considered as "wind design required" in accordance with Section R301.2.1.1.

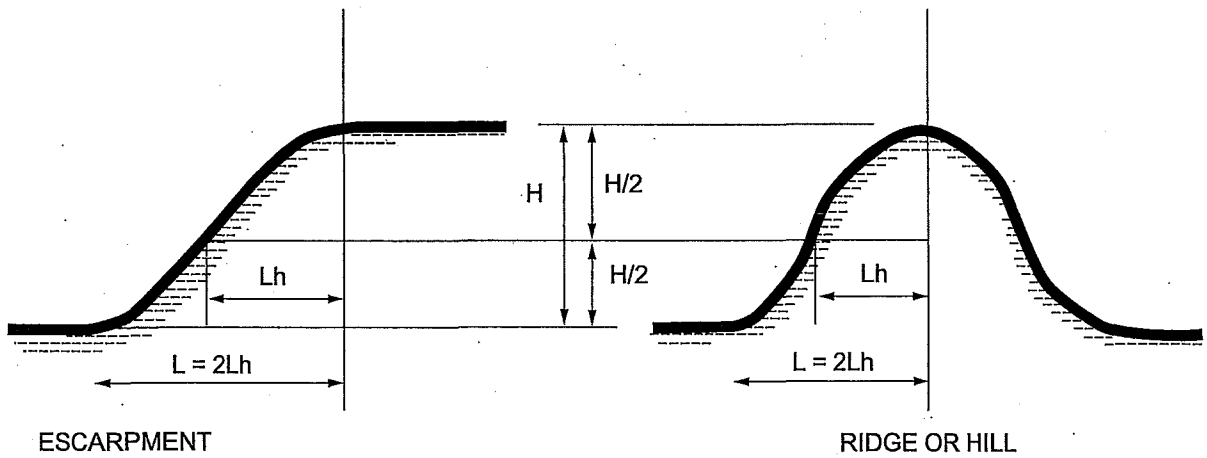

Note: H/2 determines the measurement point for Lh. L is twice Lh.

FIGURE R301.2.1.5.1(1)
TOPOGRAPHIC FEATURES FOR WIND SPEED-UP EFFECT

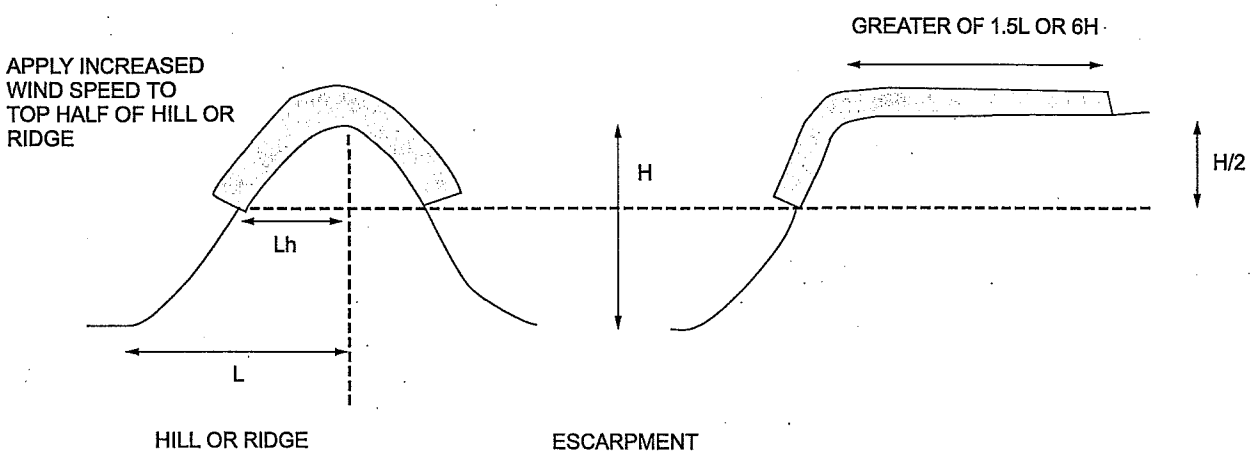

FIGURE R301.2.1.5.1(2)
ILLUSTRATION OF WHERE ON A TOPOGRAPHIC FEATURE, WIND SPEED INCREASE IS APPLIED

2511

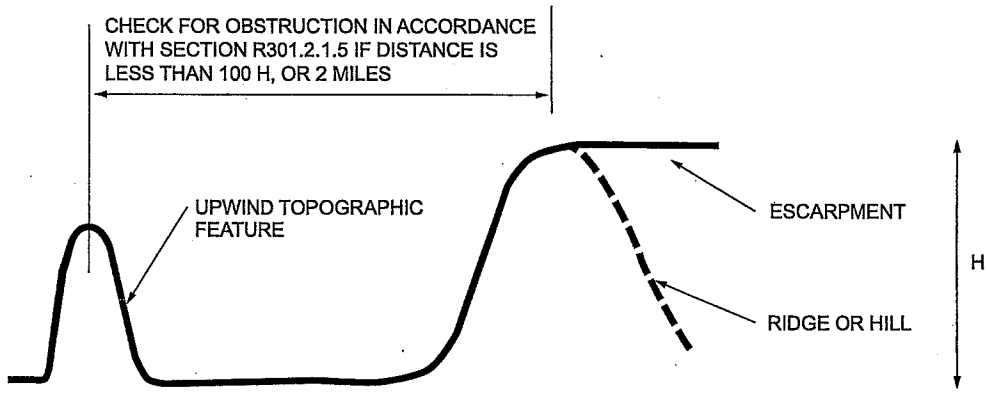

FIGURE R301.2.1.5.1(3)
UPWIND OBSTRUCTION

R301.2.2 Seismic provisions. The seismic provisions of this code shall apply as follows:

1. *Townhouses* in Seismic Design Categories C, D_0, D_1 and D_2.
2. Detached one- and two-family *dwellings* in Seismic Design Categories, D_0, D_1 and D_2.

R301.2.2.1 Determination of seismic design category. Buildings shall be assigned a seismic design category in accordance with Figure R301.2(2).

R301.2.2.1.1 Alternate determination of seismic design category. The seismic design categories and corresponding short-period design spectral response accelerations, S_{DS} shown in Figure R301.2(2) are based on soil Site Class D, as defined in Section 1613.3.2 of the *International Building Code*. If soil conditions are other than Site Class D, the short-period design spectral response accelerations, S_{DS}, for a site can be determined in accordance with Section 1613.3 of the *International Building Code*. The value of S_{DS} determined in accordance with Section 1613.3 of the *International Building Code* is permitted to be used to set the seismic design category in accordance with Table R301.2.2.1.1, and to interpolate between values in Tables R602.10.3(3), R603.9.2(1) and other seismic design requirements of this code.

TABLE R301.2.2.1.1
SEISMIC DESIGN CATEGORY DETERMINATION

CALCULATED S_{DS}	SEISMIC DESIGN CATEGORY
$S_{DS} \leq 0.17g$	A
$0.17g < S_{DS} \leq 0.33g$	B
$0.33g < S_{DS} \leq 0.50g$	C
$0.50g < S_{DS} \leq 0.67g$	D_0
$0.67g < S_{DS} \leq 0.83g$	D_1
$0.83g < S_{DS} \leq 1.25g$	D_2
$1.25g < S_{DS}$	E

R301.2.2.1.2 Alternative determination of Seismic Design Category E. Buildings located in Seismic Design Category E in accordance with Figure R301.2(2) are permitted to be reclassified as being in Seismic Design Category D_2 provided that one of the following is done:

1. A more detailed evaluation of the seismic design category is made in accordance with the provisions and maps of the *International Building Code*. Buildings located in Seismic Design Category E in accordance with Table R301.2.2.1.1, but located in Seismic Design Category D in accordance with the *International Building Code*, shall be permitted to be designed using the Seismic Design Category D_2 requirements of this code.
2. Buildings located in Seismic Design Category E that conform to the following additional restrictions are permitted to be constructed in accordance with the provisions for Seismic Design Category D_2 of this code:
   - 2.1. All exterior shear wall lines or *braced wall panels* are in one plane vertically from the foundation to the uppermost *story*.
   - 2.2. Floors shall not cantilever past the *exterior walls*.
   - 2.3. The building is within the requirements of Section R301.2.2.2.5 for being considered as regular.

R301.2.2.2 Seismic Design Category C. Structures assigned to Seismic Design Category C shall conform to the requirements of this section.

R301.2.2.2.1 Weights of materials. Average dead loads shall not exceed 15 pounds per square foot (720 Pa) for the combined roof and ceiling assemblies (on a horizontal projection) or 10 pounds per square foot (480 Pa) for floor assemblies, except as further limited by Section R301.2.2. Dead loads for walls above *grade* shall not exceed:

1. Fifteen pounds per square foot (720 Pa) for exterior light-frame wood walls.

2. Fourteen pounds per square foot (670 Pa) for exterior light-frame cold-formed steel walls.
3. Ten pounds per square foot (480 Pa) for interior light-frame wood walls.
4. Five pounds per square foot (240 Pa) for interior light-frame cold-formed steel walls.
5. Eighty pounds per square foot (3830 Pa) for 8-inch-thick (203 mm) masonry walls.
6. Eighty-five pounds per square foot (4070 Pa) for 6-inch-thick (152 mm) concrete walls.
7. Ten pounds per square foot (480 Pa) for SIP walls.

Exceptions:

1. Roof and ceiling dead loads not exceeding 25 pounds per square foot (1190 Pa) shall be permitted provided that the wall bracing amounts in Section R602.10.3 are increased in accordance with Table R602.10.3(4).
2. Light-frame walls with stone or masonry veneer shall be permitted in accordance with the provisions of Sections R702.1 and R703.
3. Fireplaces and chimneys shall be permitted in accordance with Chapter 10.

R301.2.2.2.2 Stone and masonry veneer. Anchored stone and masonry veneer shall comply with the requirements of Sections R702.1 and R703.

R301.2.2.2.3 Masonry construction. Masonry construction shall comply with the requirements of Section R606.12.

R301.2.2.2.4 Concrete construction. Detached one- and two-family *dwellings* with exterior above-*grade* concrete walls shall comply with the requirements of Section R608, PCA 100 or shall be designed in accordance with ACI 318. *Townhouses* with above-*grade* exterior concrete walls shall comply with the requirements of PCA 100 or shall be designed in accordance with ACI 318.

R301.2.2.2.5 Irregular buildings. The seismic provisions of this code shall not be used for irregular structures located in Seismic Design Categories C, D_0, D_1 and D_2. Irregular portions of structures shall be designed in accordance with accepted engineering practice to the extent the irregular features affect the performance of the remaining structural system. Where the forces associated with the irregularity are resisted by a structural system designed in accordance with accepted engineering practice, design of the remainder of the building shall be permitted using the provisions of this code. A building or portion of a building shall be considered to be irregular where one or more of the following conditions occur:

1. Where exterior shear wall lines or *braced wall panels* are not in one plane vertically from the foundation to the uppermost *story* in which they are required.

   Exception: For wood light-frame construction, floors with cantilevers or setbacks not exceeding four times the nominal depth of the wood floor joists are permitted to support *braced wall panels* that are out of plane with *braced wall panels* below provided that:

   1. Floor joists are nominal 2 inches by 10 inches (51 mm by 254 mm) or larger and spaced not more than 16 inches (406 mm) on center.
   2. The ratio of the back span to the cantilever is not less than 2 to 1.
   3. Floor joists at ends of *braced wall panels* are doubled.
   4. For wood-frame construction, a continuous rim joist is connected to ends of cantilever joists. When spliced, the rim joists shall be spliced using a galvanized metal tie not less than 0.058 inch (1.5 mm) (16 gage) and $1^1/_2$ inches (38 mm) wide fastened with six 16d nails on each side of the splice or a block of the same size as the rim joist of sufficient length to fit securely between the joist space at which the splice occurs fastened with eight 16d nails on each side of the splice; and
   5. Gravity loads carried at the end of cantilevered joists are limited to uniform wall and roof loads and the reactions from headers having a span of 8 feet (2438 mm) or less.

2. Where a section of floor or roof is not laterally supported by shear walls or *braced wall lines* on all edges.

   Exception: Portions of floors that do not support shear walls or *braced wall panels* above, or roofs, shall be permitted to extend not more than 6 feet (1829 mm) beyond a shear wall or *braced wall line*.

3. Where the end of a *braced wall panel* occurs over an opening in the wall below and ends at a horizontal distance greater than 1 foot (305 mm) from the edge of the opening. This provision is applicable to shear walls and *braced wall panels* offset in plane and to *braced wall panels* offset out of plane as permitted by the exception to Item 1.

   Exception: For wood light-frame wall construction, one end of a *braced wall panel* shall be permitted to extend more than 1

foot (305 mm) over an opening not more than 8 feet (2438 mm) in width in the wall below provided that the opening includes a header in accordance with the following:

1. The building width, loading condition and framing member species limitations of Table R602.7(1) shall apply; and
2. Not less than one 2 × 12 or two 2 × 10 for an opening not more than 4 feet (1219 mm) wide; or
3. Not less than two 2 × 12 or three 2 × 10 for an opening not more than 6 feet (1829 mm) in width; or
4. Not less than three 2 × 12 or four 2 × 10 for an opening not more than 8 feet (2438 mm) in width; and
5. The entire length of the *braced wall panel* does not occur over an opening in the wall below.

4. Where an opening in a floor or roof exceeds the lesser of 12 feet (3658 mm) or 50 percent of the least floor or roof dimension.
5. Where portions of a floor level are vertically offset.

Exceptions:

1. Framing supported directly by continuous foundations at the perimeter of the building.
2. For wood light-frame construction, floors shall be permitted to be vertically offset when the floor framing is lapped or tied together as required by Section R502.6.1.

6. Where shear walls and *braced wall lines* do not occur in two perpendicular directions.
7. Where stories above *grade plane* partially or completely braced by wood wall framing in accordance with Section R602 or cold-formed steel wall framing in accordance with Section R603 include masonry or concrete construction. Where this irregularity applies, the entire *story* shall be designed in accordance with accepted engineering practice.

Exception: Fireplaces, chimneys and masonry veneer as permitted by this code.

R301.2.2.3 Seismic Design Categories D_0, D_1 and D_2. Structures assigned to Seismic Design Categories D_0, D_1 and D_2 shall conform to the requirements for Seismic Design Category C and the additional requirements of this section.

R301.2.2.3.1 Height limitations. Wood-framed buildings shall be limited to three stories above *grade plane* or the limits given in Table R602.10.3(3). Cold-formed, steel-framed buildings shall be limited to less than or equal to three stories above *grade plane* in accordance with AISI S230. Mezzanines as defined in Section R202 that comply with Section R325 shall not be considered as stories. Structural insulated panel buildings shall be limited to two stories above *grade plane*.

R301.2.2.3.2 Stone and masonry veneer. Anchored stone and masonry veneer shall comply with the requirements of Sections R702.1 and R703.

R301.2.2.3.3 Masonry construction. Masonry construction in Seismic Design Categories D_0 and D_1 shall comply with the requirements of Section R606.12.1. Masonry construction in Seismic Design Category D_2 shall comply with the requirements of Section R606.12.4.

R301.2.2.3.4 Concrete construction. Buildings with exterior above-*grade* concrete walls shall comply with PCA 100 or shall be designed in accordance with ACI 318.

R301.2.2.3.5 Cold-formed steel framing in Seismic Design Categories D_0, D_1 and D_2. In Seismic Design Categories D_0, D_1 and D_2 in addition to the requirements of this code, cold-formed steel framing shall comply with the requirements of AISI S230.

R301.2.2.3.6 Masonry chimneys. Masonry chimneys shall be reinforced and anchored to the building in accordance with Sections R1003.3 and R1003.4.

R301.2.2.3.7 Anchorage of water heaters. Water heaters shall be anchored against movement and overturning in accordance with Section M1307.2.

R301.2.2.4 Seismic Design Category E. Buildings in Seismic Design Category E shall be designed to resist seismic loads in accordance with the *International Building Code*, except where the seismic design category is reclassified to a lower seismic design category in accordance with Section R301.2.2.1. Components of buildings not required to be designed to resist seismic loads shall be constructed in accordance with the provisions of this code.

R301.2.3 Snow loads. Wood-framed construction, cold-formed, steel-framed construction and masonry and concrete construction, and structural insulated panel construction in regions with ground snow loads 70 pounds per square foot (3.35 kPa) or less, shall be in accordance with Chapters 5, 6 and 8. Buildings in regions with ground snow loads greater than 70 pounds per square foot (3.35 kPa) shall be designed in accordance with accepted engineering practice.

R301.2.4 Floodplain construction. Buildings and structures constructed in whole or in part in flood hazard areas (including A or V Zones) as established in Table R301.2(1), and substantial improvement and restoration of substantial damage of buildings and structures in flood hazard areas, shall be designed and constructed in accordance with Section R322. Buildings and structures that are located in more than one flood hazard area shall comply with the provisions associated with the most restrictive flood hazard area. Buildings and structures located in whole or in part in identified floodways shall be designed and constructed in accordance with ASCE 24.

R301.2.4.1 Alternative provisions. As an alternative to the requirements in Section R322, ASCE 24 is permitted subject to the limitations of this code and the limitations therein.

R301.3 Story height. The wind and seismic provisions of this code shall apply to buildings with *story heights* not exceeding the following:

1. For wood wall framing, the *story height* shall not exceed 11 feet 7 inches (3531 mm) and the laterally unsupported bearing wall stud height permitted by Table R602.3(5).
2. For cold-formed steel wall framing, the *story height* shall be not more than 11 feet 7 inches (3531 mm) and the unsupported bearing wall stud height shall be not more than 10 feet (3048 mm).
3. For masonry walls, the *story height* shall be not more than 13 feet 7 inches (4140 mm) and the bearing wall clear height shall be not greater than 12 feet (3658 mm).

   Exception: An additional 8 feet (2438 mm) of bearing wall clear height is permitted for gable end walls.
4. For insulating concrete form walls, the maximum story height shall not exceed 11 feet 7 inches (3531 mm) and the maximum unsupported wall height per *story* as permitted by Section R608 tables shall not exceed 10 feet (3048 mm).
5. For structural insulated panel (SIP) walls, the story height shall be not greater than 11 feet 7 inches (3531 mm) and the bearing wall height per *story* as permitted by Section R610 tables shall not exceed 10 feet (3048 mm).

Individual walls or wall studs shall be permitted to exceed these limits as permitted by Chapter 6 provisions, provided that *story heights* are not exceeded. An engineered design shall be provided for the wall or wall framing members where the limits of Chapter 6 are exceeded. Where the *story height* limits of this section are exceeded, the design of the building, or the noncompliant portions thereof, to resist wind and seismic loads shall be in accordance with the *International Building Code*.

R301.4 Dead load. The actual weights of materials and construction shall be used for determining dead load with consideration for the dead load of fixed service *equipment*.

R301.5 Live load. The minimum uniformly distributed live load shall be as provided in Table R301.5.

TABLE R301.5
MINIMUM UNIFORMLY DISTRIBUTED LIVE LOADS
(in pounds per square foot)

USE	LIVE LOAD
Uninhabitable attics without storage[b]	10
Uninhabitable attics with limited storage[b, g]	20
Habitable attics and attics served with fixed stairs	30
Balconies (exterior) and decks[e]	40
Fire escapes	40
Guards and handrails[d]	200[h]
Guard in-fill components[f]	50[h]
Passenger vehicle garages[a]	50[a]
Rooms other than sleeping rooms	40
Sleeping rooms	30
Stairs	40[c]

For SI: 1 pound per square foot = 0.0479 kPa, 1 square inch = 645 mm^2, 1 pound = 4.45 N.

a. Elevated garage floors shall be capable of supporting a 2,000-pound load applied over a 20-square-inch area.

b. Uninhabitable *attics* without storage are those where the clear height between joists and rafters is not more than 42 inches, or where there are not two or more adjacent trusses with web configurations capable of accommodating an assumed rectangle 42 inches in height by 24 inches in width, or greater, within the plane of the trusses. This live load need not be assumed to act concurrently with any other live load requirements.

c. Individual stair treads shall be designed for the uniformly distributed live load or a 300-pound concentrated load acting over an area of 4 square inches, whichever produces the greater stresses.

d. A single concentrated load applied in any direction at any point along the top.

e. See Section R507.1 for decks attached to *exterior walls*.

f. *Guard* in-fill components (all those except the handrail), balusters and panel fillers shall be designed to withstand a horizontally applied normal load of 50 pounds on an area equal to 1 square foot. This load need not be assumed to act concurrently with any other live load requirement.

g. Uninhabitable *attics* with limited storage are those where the clear height between joists and rafters is not greater than 42 inches, or where there are two or more adjacent trusses with web configurations capable of accommodating an assumed rectangle 42 inches in height by 24 inches in width, or greater, within the plane of the trusses.

The live load need only be applied to those portions of the joists or truss bottom chords where all of the following conditions are met:

1. The *attic* area is accessible from an opening not less than 20 inches in width by 30 inches in length that is located where the clear height in the *attic* is not less than 30 inches.
2. The slopes of the joists or truss bottom chords are not greater than 2 inches vertical to 12 units horizontal.
3. Required insulation depth is less than the joist or truss bottom chord member depth.

The remaining portions of the joists or truss bottom chords shall be designed for a uniformly distributed concurrent live load of not less than 10 pounds per square foot.

h. Glazing used in handrail assemblies and *guards* shall be designed with a safety factor of 4. The safety factor shall be applied to each of the concentrated loads applied to the top of the rail, and to the load on the in-fill components. These loads shall be determined independent of one another, and loads are assumed not to occur with any other live load.

R301.6 Roof load. The roof shall be designed for the live load indicated in Table R301.6 or the snow load indicated in Table R301.2(1), whichever is greater.

TABLE R301.6
MINIMUM ROOF LIVE LOADS IN POUNDS-FORCE PER SQUARE FOOT OF HORIZONTAL PROJECTION

ROOF SLOPE	TRIBUTARY LOADED AREA IN SQUARE FEET FOR ANY STRUCTURAL MEMBER		
	0 to 200	201 to 600	Over 600
Flat or rise less than 4 inches per foot (1:3)	20	16	12
Rise 4 inches per foot (1:3) to less than 12 inches per foot (1:1)	16	14	12
Rise 12 inches per foot (1:1) and greater	12	12	12

For SI: 1 square foot = 0.0929 m^2, 1 pound per square foot = 0.0479 kPa, 1 inch per foot = 83.3 mm/m.

R301.7 Deflection. The allowable deflection of any structural member under the live load listed in Sections R301.5 and R301.6 or wind loads determined by Section R301.2.1 shall not exceed the values in Table R301.7.

TABLE R301.7
ALLOWABLE DEFLECTION OF STRUCTURAL MEMBERS[b, c]

STRUCTURAL MEMBER	ALLOWABLE DEFLECTION
Rafters having slopes greater than 3:12 with finished ceiling not attached to rafters	*L*/180
Interior walls and partitions	*H*/180
Floors	*L*/360
Ceilings with brittle finishes (including plaster and stucco)	*L*/360
Ceilings with flexible finishes (including gypsum board)	*L*/240
All other structural members	*L*/240
Exterior walls—wind loads[a] with plaster or stucco finish	*H*/360
Exterior walls—wind loads[a] with other brittle finishes	*H*/240
Exterior walls—wind loads[a] with flexible finishes	*H*/120[d]
Lintels supporting masonry veneer walls[e]	*L*/600

Note: *L* = span length, *H* = span height.

a. For the purpose of the determining deflection limits herein, the wind load shall be permitted to be taken as 0.7 times the component and cladding (ASD) loads obtained from Table R301.2(2).

b For cantilever members, *L* shall be taken as twice the length of the cantilever.

c. For aluminum structural members or panels used in roofs or walls of sunroom additions or patio covers, not supporting edge of glass or sandwich panels, the total load deflection shall not exceed *L*/60. For continuous aluminum structural members supporting edge of glass, the total load deflection shall not exceed *L*/175 for each glass lite or *L*/60 for the entire length of the member, whichever is more stringent. For sandwich panels used in roofs or walls of sunroom additions or patio covers, the total load deflection shall not exceed *L*/120.

d. Deflection for *exterior walls* with interior gypsum board finish shall be limited to an allowable deflection of *H*/180.

e. Refer to Section R703.8.2.

R301.8 Nominal sizes. For the purposes of this code, dimensions of lumber specified shall be deemed to be nominal dimensions unless specifically designated as actual dimensions.

SECTION R302
FIRE-RESISTANT CONSTRUCTION

R302.1 Exterior walls. Construction, projections, openings and penetrations of *exterior walls* of *dwellings* and accessory buildings shall comply with Table R302.1(1); or *dwellings* equipped throughout with an *automatic sprinkler system* installed in accordance with Section P2904 shall comply with Table R302.1(2).

Exceptions:

1. Walls, projections, openings or penetrations in walls perpendicular to the line used to determine the *fire separation distance.*
2. Walls of *dwellings* and *accessory structures* located on the same *lot.*
3. Detached tool sheds and storage sheds, playhouses and similar structures exempted from permits are not required to provide wall protection based on location on the *lot.* Projections beyond the *exterior wall* shall not extend over the *lot line.*
4. Detached garages accessory to a *dwelling* located within 2 feet (610 mm) of a *lot line* are permitted to have roof eave projections not exceeding 4 inches (102 mm).
5. Foundation vents installed in compliance with this code are permitted.

R302.2 Townhouses. Common walls separating *townhouses* shall be assigned a fire-resistance rating in accordance with Section R302.2, Item 1 or 2. The common wall shared by two *townhouses* shall be constructed without plumbing or mechanical equipment, ducts or vents in the cavity of the common wall. The wall shall be rated for fire exposure from both sides and shall extend to and be tight against exterior walls and the underside of the roof sheathing. Electrical installations shall be in accordance with Chapters 34 through 43. Penetrations of the membrane of common walls for electrical outlet boxes shall be in accordance with Section R302.4.

1. Where a fire sprinkler system in accordance with Section P2904 is provided, the common wall shall be not less than a 1-hour fire-resistance-rated wall assembly tested in accordance with ASTM E 119 or UL 263.
2. Where a fire sprinkler system in accordance with Section P2904 is not provided, the common wall shall be not less than a 2-hour fire-resistance-rated wall assembly tested in accordance with ASTM E 119 or UL 263.

TABLE R302.1(1)
EXTERIOR WALLS

EXTERIOR WALL ELEMENT		MINIMUM FIRE-RESISTANCE RATING	MINIMUM FIRE SEPARATION DISTANCE
Walls	Fire-resistance rated	1 hour—tested in accordance with ASTM E 119 or UL 263 with exposure from both sides	< 5 feet
	Not fire-resistance rated	0 hours	≥ 5 feet
Projections	Not allowed	N/A	< 2 feet
	Fire-resistance rated	1 hour on the underside[a, b]	≥ 2 feet to < 5 feet
	Not fire-resistance rated	0 hours	≥ 5 feet
Openings in walls	Not allowed	N/A	< 3 feet
	25% maximum of wall area	0 hours	3 feet
	Unlimited	0 hours	5 feet
Penetrations	All	Comply with Section R302.4	< 3 feet
		None required	3 feet

For SI: 1 foot = 304.8 mm.
N/A = Not Applicable.
a. Roof eave fire-resistance rating shall be permitted to be reduced to 0 hours on the underside of the eave if fireblocking is provided from the wall top plate to the underside of the roof sheathing.
b. Roof eave fire-resistance rating shall be permitted to be reduced to 0 hours on the underside of the eave provided that gable vent openings are not installed.

TABLE R302.1(2)
EXTERIOR WALLS—DWELLINGS WITH FIRE SPRINKLERS

EXTERIOR WALL ELEMENT		MINIMUM FIRE-RESISTANCE RATING	MINIMUM FIRE SEPARATION DISTANCE
Walls	Fire-resistance rated	1 hour—tested in accordance with ASTM E 119 or UL 263 with exposure from the outside	0 feet
	Not fire-resistance rated	0 hours	3 feet[a]
Projections	Not allowed	N/A	< 2 feet
	Fire-resistance rated	1 hour on the underside[b, c]	2 feet[a]
	Not fire-resistance rated	0 hours	3 feet
Openings in walls	Not allowed	N/A	< 3 feet
	Unlimited	0 hours	3 feet[a]
Penetrations	All	Comply with Section R302.4	< 3 feet
		None required	3 feet[a]

For SI: 1 foot = 304.8 mm.
N/A = Not Applicable
a. For residential subdivisions where all *dwellings* are equipped throughout with an automatic sprinkler system installed in accordance with Section P2904, the *fire separation distance* for nonrated exterior walls and rated projections shall be permitted to be reduced to 0 feet, and unlimited unprotected openings and penetrations shall be permitted, where the adjoining *lot* provides an open setback *yard* that is 6 feet or more in width on the opposite side of the property line.
b. The roof eave fire-resistance rating shall be permitted to be reduced to 0 hours on the underside of the eave if fireblocking is provided from the wall top plate to the underside of the roof sheathing.
c. The roof eave fire-resistance rating shall be permitted to be reduced to 0 hours on the underside of the eave provided that gable vent openings are not installed.

R302.2.1 Continuity. The fire-resistance-rated wall or assembly separating *townhouses* shall be continuous from the foundation to the underside of the roof sheathing, deck or slab. The fire-resistance rating shall extend the full length of the wall or assembly, including wall extensions through and separating attached enclosed *accessory structures*.

R302.2.2 Parapets for townhouses. Parapets constructed in accordance with Section R302.2.3 shall be constructed for *townhouses* as an extension of exterior walls or common walls in accordance with the following:

1. Where roof surfaces adjacent to the wall or walls are at the same elevation, the parapet shall extend not less than 30 inches (762 mm) above the roof surfaces.
2. Where roof surfaces adjacent to the wall or walls are at different elevations and the higher roof is not more than 30 inches (762 mm) above the lower roof, the parapet shall extend not less than 30 inches (762 mm) above the lower roof surface.

   Exception: A parapet is not required in the preceding two cases where the roof covering complies with a minimum Class C rating as tested in accordance with ASTM E 108 or UL 790 and the roof decking or sheathing is of noncombustible materials or *approved* fire-retardant-treated wood for a distance of 4 feet (1219 mm) on each side of the wall or walls, or one layer of $^5/_8$-inch (15.9 mm) Type X gypsum board is installed directly beneath

the roof decking or sheathing, supported by not less than nominal 2-inch (51 mm) ledgers attached to the sides of the roof framing members, for a distance of not less than 4 feet (1219 mm) on each side of the wall or walls and any openings or penetrations in the roof are not within 4 feet (1219 mm) of the common walls.

3. A parapet is not required where roof surfaces adjacent to the wall or walls are at different elevations and the higher roof is more than 30 inches (762 mm) above the lower roof. The common wall construction from the lower roof to the underside of the higher roof deck shall have not less than a 1-hour fire-resistance rating. The wall shall be rated for exposure from both sides.

R302.2.3 Parapet construction. Parapets shall have the same fire-resistance rating as that required for the supporting wall or walls. On any side adjacent to a roof surface, the parapet shall have noncombustible faces for the uppermost 18 inches (457 mm), to include counterflashing and coping materials. Where the roof slopes toward a parapet at slopes greater than 2 units vertical in 12 units horizontal (16.7-percent slope), the parapet shall extend to the same height as any portion of the roof within a distance of 3 feet (914 mm), and the height shall be not less than 30 inches (762 mm).

R302.2.4 Structural independence. Each individual *townhouse* shall be structurally independent.

Exceptions:

1. Foundations supporting *exterior walls* or common walls.
2. Structural roof and wall sheathing from each unit fastened to the common wall framing.
3. Nonstructural wall and roof coverings.
4. Flashing at termination of roof covering over common wall.
5. *Townhouses* separated by a common wall as provided in Section R302.2, Item 1 or 2.

R302.3 Two-family dwellings. *Dwelling units* in two-family dwellings shall be separated from each other by wall and floor assemblies having not less than a 1-hour fire-resistance rating where tested in accordance with ASTM E 119 or UL 263. Fire-resistance-rated floor/ceiling and wall assemblies shall extend to and be tight against the *exterior wall*, and wall assemblies shall extend from the foundation to the underside of the roof sheathing.

Exceptions:

1. A fire-resistance rating of $^1/_2$ hour shall be permitted in buildings equipped throughout with an automatic sprinkler system installed in accordance with NFPA 13.
2. Wall assemblies need not extend through *attic* spaces where the ceiling is protected by not less than $^5/_8$-inch (15.9 mm) Type X gypsum board, an *attic* draft stop constructed as specified in Section R302.12.1 is provided above and along the wall assembly separating the *dwellings* and the structural framing supporting the ceiling is protected by not less than $^1/_2$-inch (12.7 mm) gypsum board or equivalent.

R302.3.1 Supporting construction. Where floor assemblies are required to be fire-resistance rated by Section R302.3, the supporting construction of such assemblies shall have an equal or greater fire-resistance rating.

R302.4 Dwelling unit rated penetrations. Penetrations of wall or floor-ceiling assemblies required to be fire-resistance rated in accordance with Section R302.2 or R302.3 shall be protected in accordance with this section.

R302.4.1 Through penetrations. Through penetrations of fire-resistance-rated wall or floor assemblies shall comply with Section R302.4.1.1 or R302.4.1.2.

Exception: Where the penetrating items are steel, ferrous or copper pipes, tubes or conduits, the annular space shall be protected as follows:

1. In concrete or masonry wall or floor assemblies, concrete, grout or mortar shall be permitted where installed to the full thickness of the wall or floor assembly or the thickness required to maintain the fire-resistance rating, provided that both of the following are complied with:
   1.1. The nominal diameter of the penetrating item is not more than 6 inches (152 mm).
   1.2. The area of the opening through the wall does not exceed 144 square inches (92 900 mm^2).
2. The material used to fill the annular space shall prevent the passage of flame and hot gases sufficient to ignite cotton waste where subjected to ASTM E 119 or UL 263 time temperature fire conditions under a positive pressure differential of not less than 0.01 inch of water (3 Pa) at the location of the penetration for the time period equivalent to the fire-resistance rating of the construction penetrated.

R302.4.1.1 Fire-resistance-rated assembly. Penetrations shall be installed as tested in the *approved* fire-resistance-rated assembly.

R302.4.1.2 Penetration firestop system. Penetrations shall be protected by an *approved* penetration firestop system installed as tested in accordance with ASTM E 814 or UL 1479, with a positive pressure differential of not less than 0.01 inch of water (3 Pa) and shall have an F rating of not less than the required fire-resistance rating of the wall or floor-ceiling assembly penetrated.

R302.4.2 Membrane penetrations. Membrane penetrations shall comply with Section R302.4.1. Where walls are required to have a fire-resistance rating, recessed fixtures shall be installed so that the required fire-resistance rating will not be reduced.

Exceptions:

1. Membrane penetrations of not more than 2-hour fire-resistance-rated walls and partitions by steel electrical boxes that do not exceed 16 square

inches (0.0103 m^2) in area provided that the aggregate area of the openings through the membrane does not exceed 100 square inches (0.0645 m^2) in any 100 square feet (9.29 m^2) of wall area. The annular space between the wall membrane and the box shall not exceed $^1/_8$ inch (3.1 mm). Such boxes on opposite sides of the wall shall be separated by one of the following:

1.1. By a horizontal distance of not less than 24 inches (610 mm) where the wall or partition is constructed with individual noncommunicating stud cavities.

1.2. By a horizontal distance of not less than the depth of the wall cavity where the wall cavity is filled with cellulose loose-fill, rockwool or slag mineral wool insulation.

1.3. By solid fireblocking in accordance with Section R302.11.

1.4. By protecting both boxes with *listed* putty pads.

1.5. By other *listed* materials and methods.

2. Membrane penetrations by *listed* electrical boxes of any materials provided that the boxes have been tested for use in fire-resistance-rated assemblies and are installed in accordance with the instructions included in the *listing*. The annular space between the wall membrane and the box shall not exceed $^1/_8$ inch (3.1 mm) unless *listed* otherwise. Such boxes on opposite sides of the wall shall be separated by one of the following:

2.1. By the horizontal distance specified in the *listing* of the electrical boxes.

2.2. By solid fireblocking in accordance with Section R302.11.

2.3. By protecting both boxes with *listed* putty pads.

2.4. By other *listed* materials and methods.

3. The annular space created by the penetration of a fire sprinkler provided that it is covered by a metal escutcheon plate.

R302.5 Dwelling-garage opening and penetration protection. Openings and penetrations through the walls or ceilings separating the *dwelling* from the garage shall be in accordance with Sections R302.5.1 through R302.5.3.

R302.5.1 Opening protection. Openings from a private garage directly into a room used for sleeping purposes shall not be permitted. Other openings between the garage and residence shall be equipped with solid wood doors not less than $1^3/_8$ inches (35 mm) in thickness, solid or honeycomb-core steel doors not less than $1^3/_8$ inches (35 mm) thick, or 20-minute fire-rated doors, equipped with a self-closing device.

R302.5.2 Duct penetration. Ducts in the garage and ducts penetrating the walls or ceilings separating the *dwelling* from the garage shall be constructed of a minimum No. 26 gage (0.48 mm) sheet steel or other *approved* material and shall not have openings into the garage.

R302.5.3 Other penetrations. Penetrations through the separation required in Section R302.6 shall be protected as required by Section R302.11, Item 4.

R302.6 Dwelling-garage fire separation. The garage shall be separated as required by Table R302.6. Openings in garage walls shall comply with Section R302.5. Attachment of gypsum board shall comply with Table R702.3.5. The wall separation provisions of Table R302.6 shall not apply to garage walls that are perpendicular to the adjacent *dwelling unit* wall.

R302.7 Under-stair protection. Enclosed accessible space under stairs shall have walls, under-stair surface and any soffits protected on the enclosed side with $^1/_2$-inch (12.7 mm) gypsum board.

R302.8 Foam plastics. For requirements for foam plastics, see Section R316.

R302.9 Flame spread index and smoke-developed index for wall and ceiling finishes. Flame spread and smoke developed indexes for wall and ceiling finishes shall be in accordance with Sections R302.9.1 through R302.9.4.

R302.9.1 Flame spread index. Wall and ceiling finishes shall have a flame spread index of not greater than 200.

Exception: Flame spread index requirements for finishes shall not apply to trim defined as picture molds, chair rails, baseboards and handrails; to doors and windows or their frames; or to materials that are less than $^1/_{28}$ inch (0.91 mm) in thickness cemented to the surface of walls or ceilings if these materials exhibit flame spread index values not greater than those of paper of this thickness cemented to a noncombustible backing.

TABLE R302.6
DWELLING-GARAGE SEPARATION

SEPARATION	MATERIAL
From the residence and attics	Not less than $^1/_2$-inch gypsum board or equivalent applied to the garage side
From habitable rooms above the garage	Not less than $^5/_8$-inch Type X gypsum board or equivalent
Structure(s) supporting floor/ceiling assemblies used for separation required by this section	Not less than $^1/_2$-inch gypsum board or equivalent
Garages located less than 3 feet from a dwelling unit on the same lot	Not less than $^1/_2$-inch gypsum board or equivalent applied to the interior side of exterior walls that are within this area

For SI: 1 inch = 25.4 mm, 1 foot = 304.8 mm.

R302.9.2 Smoke-developed index. Wall and ceiling finishes shall have a smoke-developed index of not greater than 450.

R302.9.3 Testing. Tests shall be made in accordance with ASTM E 84 or UL 723.

R302.9.4 Alternative test method. As an alternative to having a flame spread index of not greater than 200 and a smoke-developed index of not greater than 450 where tested in accordance with ASTM E 84 or UL 723, wall and ceiling finishes shall be permitted to be tested in accordance with NFPA 286. Materials tested in accordance with NFPA 286 shall meet the following criteria:

The interior finish shall comply with the following:

1. During the 40 kW exposure, flames shall not spread to the ceiling.
2. The flame shall not spread to the outer extremity of the sample on any wall or ceiling.
3. Flashover, as defined in NFPA 286, shall not occur.
4. The peak heat release rate throughout the test shall not exceed 800 kW.
5. The total smoke released throughout the test shall not exceed 1,000 m^2.

R302.10 Flame spread index and smoke-developed index for insulation. Flame spread and smoke-developed index for insulation shall be in accordance with Sections R302.10.1 through R302.10.5.

R302.10.1 Insulation. Insulation materials, including facings, such as vapor retarders and vapor-permeable membranes installed within floor-ceiling assemblies, roof-ceiling assemblies, wall assemblies, crawl spaces and *attics* shall have a flame spread index not to exceed 25 with an accompanying smoke-developed index not to exceed 450 where tested in accordance with ASTM E 84 or UL 723.

Exceptions:

1. Where such materials are installed in concealed spaces, the flame spread index and smoke-developed index limitations do not apply to the facings, provided that the facing is installed in substantial contact with the unexposed surface of the ceiling, floor or wall finish.
2. Cellulose fiber loose-fill insulation, that is not spray applied, complying with the requirements of Section R302.10.3, shall not be required to meet the smoke-developed index of not more than 450 and shall be required to meet a smoke-developed index of not more than 450 where tested in accordance with CAN/ULC S102.2.
3. Foam plastic insulation shall comply with Section R316.

R302.10.2 Loose-fill insulation. Loose-fill insulation materials that cannot be mounted in the ASTM E 84 or UL 723 apparatus without a screen or artificial supports shall comply with the flame spread and smoke-developed limits of Section R302.10.1 where tested in accordance with CAN/ULC S102.2.

Exception: Cellulosic fiber loose-fill insulation shall not be required to be tested in accordance with CAN/ULC S102.2, provided such insulation complies with the requirements of Sections R302.10.1 and R302.10.3.

R302.10.3 Cellulosic fiber loose-fill insulation. Cellulosic fiber loose-fill insulation shall comply with CPSC 16 CFR, Parts 1209 and 1404. Each package of such insulating material shall be clearly *labeled* in accordance with CPSC 16 CFR, Parts 1209 and 1404.

R302.10.4 Exposed attic insulation. Exposed insulation materials installed on *attic* floors shall have a critical radiant flux not less than 0.12 watt per square centimeter.

R302.10.5 Testing. Tests for critical radiant flux shall be made in accordance with ASTM E 970.

R302.11 Fireblocking. In combustible construction, fireblocking shall be provided to cut off both vertical and horizontal concealed draft openings and to form an effective fire barrier between stories, and between a top *story* and the roof space.

Fireblocking shall be provided in wood-framed construction in the following locations:

1. In concealed spaces of stud walls and partitions, including furred spaces and parallel rows of studs or staggered studs, as follows:
   1.1. Vertically at the ceiling and floor levels.
   1.2. Horizontally at intervals not exceeding 10 feet (3048 mm).
2. At interconnections between concealed vertical and horizontal spaces such as occur at soffits, drop ceilings and cove ceilings.
3. In concealed spaces between stair stringers at the top and bottom of the run. Enclosed spaces under stairs shall comply with Section R302.7.
4. At openings around vents, pipes, ducts, cables and wires at ceiling and floor level, with an *approved* material to resist the free passage of flame and products of combustion. The material filling this annular space shall not be required to meet the ASTM E 136 requirements.
5. For the fireblocking of chimneys and fireplaces, see Section R1003.19.
6. Fireblocking of cornices of a two-family *dwelling* is required at the line of *dwelling unit* separation.

R302.11.1 Fireblocking materials. Except as provided in Section R302.11, Item 4, fireblocking shall consist of the following materials.

1. Two-inch (51 mm) nominal lumber.
2. Two thicknesses of 1-inch (25.4 mm) nominal lumber with broken lap joints.
3. One thickness of $^{23}/_{32}$-inch (18.3 mm) wood structural panels with joints backed by $^{23}/_{32}$-inch (18.3 mm) wood structural panels.

4. One thickness of $^3/_4$-inch (19.1 mm) particleboard with joints backed by $^3/_4$-inch (19.1 mm) particleboard.
5. One-half-inch (12.7 mm) gypsum board.
6. One-quarter-inch (6.4 mm) cement-based millboard.
7. Batts or blankets of mineral wool or glass fiber or other *approved* materials installed in such a manner as to be securely retained in place.
8. Cellulose insulation installed as tested in accordance with ASTM E 119 or UL 263, for the specific application.

R302.11.1.1 Batts or blankets of mineral or glass fiber. Batts or blankets of mineral or glass fiber or other *approved* nonrigid materials shall be permitted for compliance with the 10-foot (3048 mm) horizontal fireblocking in walls constructed using parallel rows of studs or staggered studs.

R302.11.1.2 Unfaced fiberglass. Unfaced fiberglass batt insulation used as fireblocking shall fill the entire cross section of the wall cavity to a height of not less than 16 inches (406 mm) measured vertically. Where piping, conduit or similar obstructions are encountered, the insulation shall be packed tightly around the obstruction.

R302.11.1.3 Loose-fill insulation material. Loose-fill insulation material shall not be used as a fireblock unless specifically tested in the form and manner intended for use to demonstrate its ability to remain in place and to retard the spread of fire and hot gases.

R302.11.2 Fireblocking integrity. The integrity of fireblocks shall be maintained.

R302.12 Draftstopping. In combustible construction where there is usable space both above and below the concealed space of a floor-ceiling assembly, draftstops shall be installed so that the area of the concealed space does not exceed 1,000 square feet (92.9 m^2). Draftstopping shall divide the concealed space into approximately equal areas. Where the assembly is enclosed by a floor membrane above and a ceiling membrane below, draftstopping shall be provided in floor-ceiling assemblies under the following circumstances:

1. Ceiling is suspended under the floor framing.
2. Floor framing is constructed of truss-type open-web or perforated members.

R302.12.1 Materials. Draftstopping materials shall be not less than $^1/_2$-inch (12.7 mm) gypsum board, $^3/_8$-inch (9.5 mm) wood structural panels or other *approved* materials adequately supported. Draftstopping shall be installed parallel to the floor framing members unless otherwise *approved* by the *building official*. The integrity of the draftstops shall be maintained.

R302.13 Fire protection of floors. Floor assemblies that are not required elsewhere in this code to be fire-resistance rated, shall be provided with a $^1/_2$-inch (12.7 mm) gypsum wallboard membrane, $^5/_8$-inch (16 mm) wood structural panel membrane, or equivalent on the underside of the floor framing member. Penetrations or openings for ducts, vents, electrical outlets, lighting, devices, luminaires, wires, speakers, drainage, piping and similar openings or penetrations shall be permitted.

Exceptions:

1. Floor assemblies located directly over a space protected by an automatic sprinkler system in accordance with Section P2904, NFPA 13D, or other approved equivalent sprinkler system.
2. Floor assemblies located directly over a crawl space not intended for storage or fuel-fired appliances.
3. Portions of floor assemblies shall be permitted to be unprotected where complying with the following:
   3.1. The aggregate area of the unprotected portions does not exceed 80 square feet (7.4 m^2) per story
   3.2. Fireblocking in accordance with Section R302.11.1 is installed along the perimeter of the unprotected portion to separate the unprotected portion from the remainder of the floor assembly.
4. Wood floor assemblies using dimension lumber or structural composite lumber equal to or greater than 2-inch by 10-inch (50.8 mm by 254 mm) nominal dimension, or other approved floor assemblies demonstrating equivalent fire performance.

R302.14 Combustible insulation clearance. Combustible insulation shall be separated not less than 3 inches (76 mm) from recessed luminaires, fan motors and other heat-producing devices.

Exception: Where heat-producing devices are *listed* for lesser clearances, combustible insulation complying with the listing requirements shall be separated in accordance with the conditions stipulated in the listing.

Recessed luminaires installed in the *building thermal envelope* shall meet the requirements of Section N1102.4.5 of this code.

SECTION R303
LIGHT, VENTILATION AND HEATING

R303.1 Habitable rooms. Habitable rooms shall have an aggregate glazing area of not less than 8 percent of the floor area of such rooms. Natural *ventilation* shall be through windows, skylights, doors, louvers or other *approved* openings to the outdoor air. Such openings shall be provided with ready access or shall otherwise be readily controllable by the building occupants. The openable area to the outdoors shall be not less than 4 percent of the floor area being ventilated.

Exceptions:

1. The glazed areas need not be openable where the opening is not required by Section R310 and a whole-house mechanical *ventilation* system is installed in accordance with Section M1507.
2. The glazed areas need not be installed in rooms where Exception 1 is satisfied and artificial light is provided that is capable of producing an average

2521

illumination of 6 footcandles (65 lux) over the area of the room at a height of 30 inches (762 mm) above the floor level.

3. Use of sunroom and patio covers, as defined in Section R202, shall be permitted for natural *ventilation* if in excess of 40 percent of the exterior sunroom walls are open, or are enclosed only by insect screening.

R303.2 Adjoining rooms. For the purpose of determining light and *ventilation* requirements, any room shall be considered to be a portion of an adjoining room where not less than one-half of the area of the common wall is open and unobstructed and provides an opening of not less than one-tenth of the floor area of the interior room and not less than 25 square feet (2.3 m^2).

Exception: Openings required for light or *ventilation* shall be permitted to open into a sunroom with thermal isolation or a patio cover, provided that there is an openable area between the adjoining room and the sunroom or patio cover of not less than one-tenth of the floor area of the interior room and not less than 20 square feet (2 m^2). The minimum openable area to the outdoors shall be based upon the total floor area being ventilated.

R303.3 Bathrooms. Bathrooms, water closet compartments and other similar rooms shall be provided with aggregate glazing area in windows of not less than 3 square feet (0.3 m^2), one-half of which must be openable.

Exception: The glazed areas shall not be required where artificial light and a local exhaust system are provided. The minimum local exhaust rates shall be determined in accordance with Section M1507. Exhaust air from the space shall be exhausted directly to the outdoors.

R303.4 Mechanical ventilation. Where the air infiltration rate of a *dwelling unit* is 5 air changes per hour or less where tested with a blower door at a pressure of 0.2 inch w.c (50 Pa) in accordance with Section N1102.4.1.2, the *dwelling unit* shall be provided with whole-house mechanical ventilation in accordance with Section M1507.3.

R303.5 Opening location. Outdoor intake and exhaust openings shall be located in accordance with Sections R303.5.1 and R303.5.2.

R303.5.1 Intake openings. Mechanical and gravity outdoor air intake openings shall be located not less than 10 feet (3048 mm) from any hazardous or noxious contaminant, such as vents, chimneys, plumbing vents, streets, alleys, parking lots and loading docks.

For the purpose of this section, the exhaust from *dwelling* unit toilet rooms, bathrooms and kitchens shall not be considered as hazardous or noxious.

Exceptions:

1. The 10-foot (3048 mm) separation is not required where the intake opening is located 3 feet (914 mm) or greater below the contaminant source.
2. Vents and chimneys serving fuel-burning appliances shall be terminated in accordance with the applicable provisions of Chapters 18 and 24.
3. Clothes dryer exhaust ducts shall be terminated in accordance with Section M1502.3.

R303.5.2 Exhaust openings. Exhaust air shall not be directed onto walkways.

R303.6 Outside opening protection. Air exhaust and intake openings that terminate outdoors shall be protected with corrosion-resistant screens, louvers or grilles having an opening size of not less than $^1/_4$ inch (6 mm) and a maximum opening size of $^1/_2$ inch (13 mm), in any dimension. Openings shall be protected against local weather conditions. Outdoor air exhaust and intake openings shall meet the provisions for *exterior wall* opening protectives in accordance with this code.

R303.7 Interior stairway illumination. Interior stairways shall be provided with an artificial light source to illuminate the landings and treads. The light source shall be capable of illuminating treads and landings to levels of not less than 1 foot-candle (11 lux) as measured at the center of treads and landings. There shall be a wall switch at each floor level to control the light source where the stairway has six or more risers.

Exception: A switch is not required where remote, central or automatic control of lighting is provided.

R303.7.1 Light activation. Where lighting outlets are installed in interior stairways, there shall be a wall switch at each floor level to control the lighting outlet where the stairway has six or more risers. The illumination of exterior stairways shall be controlled from inside the *dwelling* unit.

Exception: Lights that are continuously illuminated or automatically controlled.

R303.8 Exterior stairway illumination. Exterior stairways shall be provided with an artificial light source located at the top landing of the stairway. Exterior stairways providing access to a *basement* from the outdoor *grade* level shall be provided with an artificial light source located at the bottom landing of the stairway.

R303.8.1 Sunroom additions. Required glazed openings shall be permitted to open into sunroom *additions* or patio covers that abut a street, *yard* or court if in excess of 40 percent of the exterior sunroom walls are open, or are enclosed only by insect screening, and the ceiling height of the sunroom is not less than 7 feet (2134 mm).

R303.9 Required heating. Where the winter design temperature in Table R301.2(1) is below 60°F (16°C), every *dwelling unit* shall be provided with heating facilities capable of maintaining a room temperature of not less than 68°F (20°C) at a point 3 feet (914 mm) above the floor and 2 feet (610 mm) from exterior walls in habitable rooms at the design temperature. The installation of one or more portable space heaters shall not be used to achieve compliance with this section.

SECTION R304
MINIMUM ROOM AREAS

R304.1 Minimum area. Habitable rooms shall have a floor area of not less than 70 square feet (6.5 m^2).

Exception: Kitchens.

R304.2 Minimum dimensions. Habitable rooms shall be not less than 7 feet (2134 mm) in any horizontal dimension.

Exception: Kitchens.

R304.3 Height effect on room area. Portions of a room with a sloping ceiling measuring less than 5 feet (1524 mm) or a furred ceiling measuring less than 7 feet (2134 mm) from the finished floor to the finished ceiling shall not be considered as contributing to the minimum required habitable area for that room.

SECTION R305
CEILING HEIGHT

R305.1 Minimum height. *Habitable space*, hallways and portions of *basements* containing these spaces shall have a ceiling height of not less than 7 feet (2134 mm). Bathrooms, toilet rooms and laundry rooms shall have a ceiling height of not less than 6 feet 8 inches (2032 mm).

Exceptions:

1. For rooms with sloped ceilings, the required floor area of the room shall have a ceiling height of not less than 5 feet (1524 mm) and not less than 50 percent of the required floor area shall have a ceiling height of not less than 7 feet (2134 mm).
2. The ceiling height above bathroom and toilet room fixtures shall be such that the fixture is capable of being used for its intended purpose. A shower or tub equipped with a showerhead shall have a ceiling height of not less than 6 feet 8 inches (2032 mm) above an area of not less than 30 inches (762 mm) by 30 inches (762 mm) at the showerhead.
3. Beams, girders, ducts or other obstructions in *basements* containing *habitable space* shall be permitted to project to within 6 feet 4 inches (1931 mm) of the finished floor.

R305.1.1 Basements. Portions of *basements* that do not contain *habitable space* or hallways shall have a ceiling height of not less than 6 feet 8 inches (2032 mm).

Exception: At beams, girders, ducts or other obstructions, the ceiling height shall be not less than 6 feet 4 inches (1931 mm) from the finished floor.

SECTION R306
SANITATION

R306.1 Toilet facilities. Every *dwelling* unit shall be provided with a water closet, lavatory, and a bathtub or shower.

R306.2 Kitchen. Each *dwelling* unit shall be provided with a kitchen area and every kitchen area shall be provided with a sink.

R306.3 Sewage disposal. Plumbing fixtures shall be connected to a sanitary sewer or to an *approved* private sewage disposal system.

R306.4 Water supply to fixtures. Plumbing fixtures shall be connected to an *approved* water supply. Kitchen sinks, lavatories, bathtubs, showers, bidets, laundry tubs and washing machine outlets shall be provided with hot and cold water.

SECTION R307
TOILET, BATH AND SHOWER SPACES

R307.1 Space required. Fixtures shall be spaced in accordance with Figure R307.1, and in accordance with the requirements of Section P2705.1.

R307.2 Bathtub and shower spaces. Bathtub and shower floors and walls above bathtubs with installed shower heads and in shower compartments shall be finished with a nonabsorbent surface. Such wall surfaces shall extend to a height of not less than 6 feet (1829 mm) above the floor.

SECTION R308
GLAZING

R308.1 Identification. Except as indicated in Section R308.1.1 each pane of glazing installed in hazardous locations as defined in Section R308.4 shall be provided with a manufacturer's designation specifying who applied the designation, designating the type of glass and the safety glazing standard with which it complies, which is visible in the final installation. The designation shall be acid etched, sandblasted, ceramic-fired, laser etched, embossed, or be of a type that once applied cannot be removed without being destroyed. A *label* shall be permitted in lieu of the manufacturer's designation.

Exceptions:

1. For other than tempered glass, manufacturer's designations are not required provided that the *building official* approves the use of a certificate, affidavit or other evidence confirming compliance with this code.
2. Tempered spandrel glass is permitted to be identified by the manufacturer with a removable paper designation.

R308.1.1 Identification of multiple assemblies. Multipane assemblies having individual panes not exceeding 1 square foot (0.09 m^2) in exposed area shall have not less than one pane in the assembly identified in accordance with Section R308.1. Other panes in the assembly shall be *labeled* "CPSC 16 CFR 1201" or "ANSI Z97.1" as appropriate.

R308.2 Louvered windows or jalousies. Regular, float, wired or patterned glass in jalousies and louvered windows shall be not less than nominal $^3/_{16}$ inch (5 mm) thick and not more than 48 inches (1219 mm) in length. Exposed glass edges shall be smooth.

R308.2.1 Wired glass prohibited. Wired glass with wire exposed on longitudinal edges shall not be used in jalousies or louvered windows.

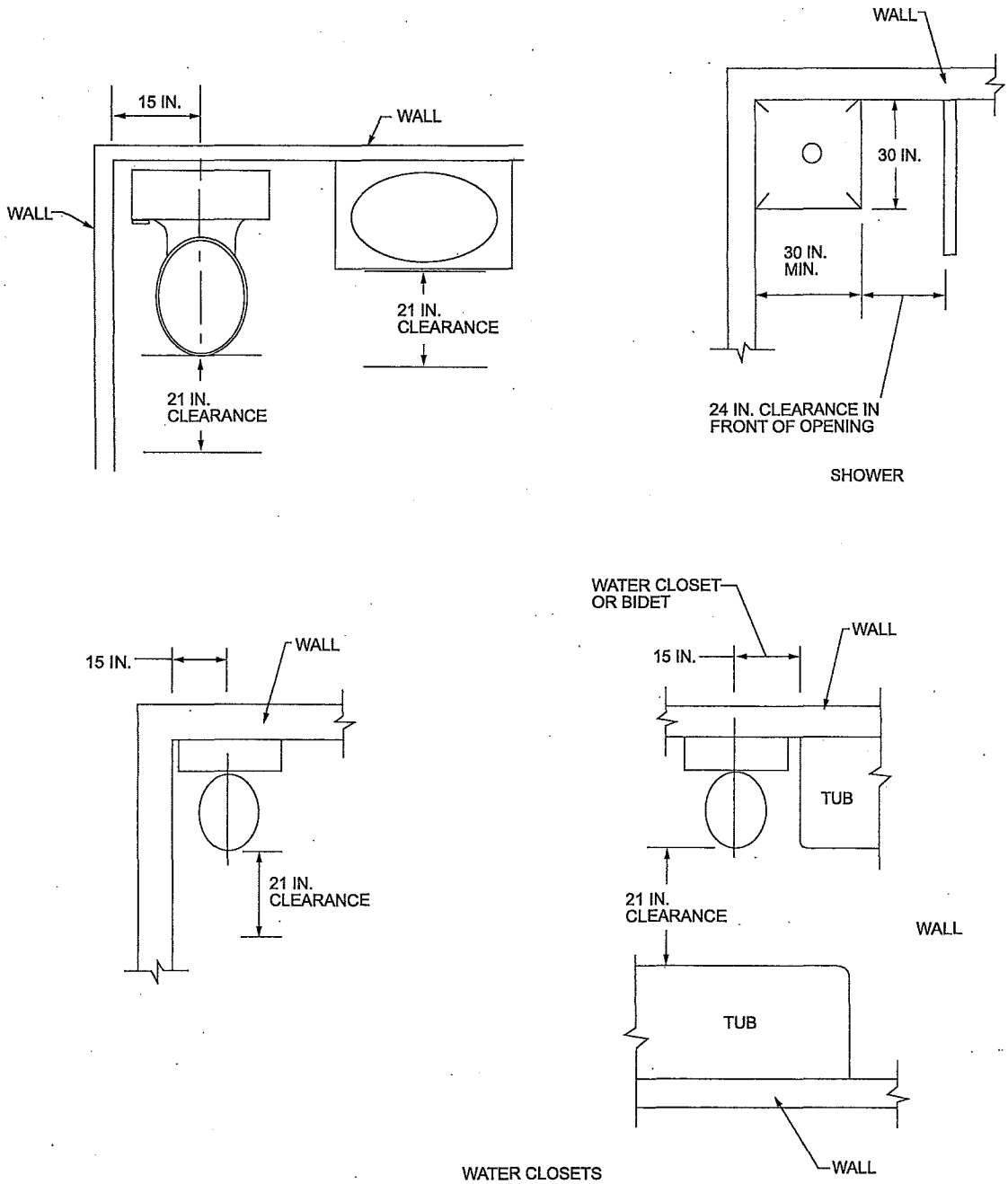

For SI: 1 inch = 25.4 mm.

FIGURE R307.1
MINIMUM FIXTURE CLEARANCES

R308.3 Human impact loads. Individual glazed areas, including glass mirrors in hazardous locations such as those indicated as defined in Section R308.4, shall pass the test requirements of Section R308.3.1.

Exceptions:

1. Louvered windows and jalousies shall comply with Section R308.2.
2. Mirrors and other glass panels mounted or hung on a surface that provides a continuous backing support.
3. Glass unit masonry complying with Section R607.

R308.3.1 Impact test. Where required by other sections of the code, glazing shall be tested in accordance with CPSC 16 CFR 1201. Glazing shall comply with the test criteria for Category II unless otherwise indicated in Table R308.3.1(1).

Exception: Glazing not in doors or enclosures for hot tubs, whirlpools, saunas, steam rooms, bathtubs and showers shall be permitted to be tested in accordance with ANSI Z97.1. Glazing shall comply with the test criteria for Class A unless indicated in Table R308.3.1(2).

TABLE R308.3.1(1)
MINIMUM CATEGORY CLASSIFICATION OF GLAZING USING CPSC 16 CFR 1201

EXPOSED SURFACE AREA OF ONE SIDE OF ONE LITE	GLAZING IN STORM OR COMBINATION DOORS (Category Class)	GLAZING IN DOORS (Category Class)	GLAZED PANELS REGULATED BY SECTION R308.4.3 (Category Class)	GLAZED PANELS REGULATED BY SECTION R308.4.2 (Category Class)	GLAZING IN DOORS AND ENCLOSURES REGULATED BY SECTION 308.4.5 (Category Class)	SLIDING GLASS DOORS PATIO TYPE (Category Class)
9 square feet or less	I	I	NR	I	II	II
More than 9 square feet	II	II	II	II	II	II

For SI: 1 square foot = 0.0929 m^2.
NR = "No Requirement."

TABLE R308.3.1(2)
MINIMUM CATEGORY CLASSIFICATION OF GLAZING USING ANSI Z97.1

EXPOSED SURFACE AREA OF ONE SIDE OF ONE LITE	GLAZED PANELS REGULATED BY SECTION R308.4.3 (Category Class)	GLAZED PANELS REGULATED BY SECTION R308.4.2 (Category Class)	DOORS AND ENCLOSURES REGULATED BY SECTION R308.4.5[a] (Category Class)
9 square feet or less	No requirement	B	A
More than 9 square feet	A	A	A

For SI: 1 square foot = 0.0929 m^2.
a. Use is permitted only by the exception to Section R308.3.1.

R308.4 Hazardous locations. The locations specified in Sections R308.4.1 through R308.4.7 shall be considered to be specific hazardous locations for the purposes of glazing.

R308.4.1 Glazing in doors. Glazing in fixed and operable panels of swinging, sliding and bifold doors shall be considered to be a hazardous location.

Exceptions:

1. Glazed openings of a size through which a 3-inch-diameter (76 mm) sphere is unable to pass.
2. Decorative glazing.

R308.4.2 Glazing adjacent to doors. Glazing in an individual fixed or operable panel adjacent to a door shall be considered to be a hazardous location where the bottom exposed edge of the glazing is less than 60 inches (1524 mm) above the floor or walking surface and it meets either of the following conditions:

1. Where the glazing is within 24 inches (610 mm) of either side of the door in the plane of the door in a closed position.
2. Where the glazing is on a wall perpendicular to the plane of the door in a closed position and within 24 inches (610 mm) of the hinge side of an in-swinging door.

Exceptions:

1. Decorative glazing.
2. Where there is an intervening wall or other permanent barrier between the door and the glazing.
3. Where access through the door is to a closet or storage area 3 feet (914 mm) or less in depth. Glazing in this application shall comply with Section R308.4.3.
4. Glazing that is adjacent to the fixed panel of patio doors.

R308.4.3 Glazing in windows. Glazing in an individual fixed or operable panel that meets all of the following conditions shall be considered to be a hazardous location:

1. The exposed area of an individual pane is larger than 9 square feet (0.836 m^2),
2. The bottom edge of the glazing is less than 18 inches (457 mm) above the floor,
3. The top edge of the glazing is more than 36 inches (914 mm) above the floor; and
4. One or more walking surfaces are within 36 inches (914 mm), measured horizontally and in a straight line, of the glazing.

Exceptions:

1. Decorative glazing.
2. Where a horizontal rail is installed on the accessible side(s) of the glazing 34 to 38 inches (864 to 965 mm) above the walking surface. The rail shall be capable of withstanding a horizontal load of 50 pounds per linear foot (730 N/m) without contacting the glass and have a cross-sectional height of not less than $1^1/_2$ inches (38 mm).
3. Outboard panes in insulating glass units and other multiple glazed panels where the bottom edge of the glass is 25 feet (7620 mm) or more above *grade*, a roof, walking surfaces or other horizontal [within 45 degrees (0.79 rad) of horizontal] surface adjacent to the glass exterior.

R308.4.4 Glazing in guards and railings. Glazing in *guards* and railings, including structural baluster panels and nonstructural in-fill panels, regardless of area or height above a walking surface shall be considered to be a hazardous location.

R308.4.5 Glazing and wet surfaces. Glazing in walls, enclosures or fences containing or facing hot tubs, spas, whirlpools, saunas, steam rooms, bathtubs, showers and indoor or outdoor swimming pools where the bottom exposed edge of the glazing is less than 60 inches (1524 mm) measured vertically above any standing or walking surface shall be considered to be a hazardous location. This shall apply to single glazing and each pane in multiple glazing.

Exception: Glazing that is more than 60 inches (1524 mm), measured horizontally and in a straight line, from the water's edge of a bathtub, hot tub, spa, whirlpool or swimming pool or from the edge of a shower, sauna or steam room.

R308.4.6 Glazing adjacent to stairs and ramps. Glazing where the bottom exposed edge of the glazing is less than 36 inches (914 mm) above the plane of the adjacent walking surface of stairways, landings between flights of stairs and ramps shall be considered to be a hazardous location.

Exceptions:

1. Where a rail is installed on the accessible side(s) of the glazing 34 to 38 inches (864 to 965 mm) above the walking surface. The rail shall be capable of withstanding a horizontal load of 50 pounds per linear foot (730 N/m) without contacting the glass and have a cross-sectional height of not less than $1^1/_2$ inches (38 mm).
2. Glazing 36 inches (914 mm) or more measured horizontally from the walking surface.

R308.4.7 Glazing adjacent to the bottom stair landing. Glazing adjacent to the landing at the bottom of a stairway where the glazing is less than 36 inches (914 mm) above the landing and within a 60-inch (1524 mm) horizontal arc less than 180 degrees from the bottom tread nosing shall be considered to be a hazardous location.

Exception: The glazing is protected by a *guard* complying with Section R312 and the plane of the glass is more than 18 inches (457 mm) from the *guard*.

R308.5 Site-built windows. Site-built windows shall comply with Section 2404 of the *International Building Code*.

R308.6 Skylights and sloped glazing. Skylights and sloped glazing shall comply with the following sections.

R308.6.1 Definitions. The following terms are defined in Chapter 2:

SKYLIGHT, UNIT.

SKYLIGHTS AND SLOPED GLAZING.

TUBULAR DAYLIGHTING DEVICE (TDD).

R308.6.2 Materials. The following types of glazing shall be permitted to be used:

1. Laminated glass with not less than a 0.015-inch (0.38 mm) polyvinyl butyral interlayer for glass panes 16 square feet (1.5 m^2) or less in area located such that the highest point of the glass is not more than 12 feet (3658 mm) above a walking surface or other accessible area; for higher or larger sizes, the interlayer thickness shall be not less than 0.030 inch (0.76 mm).
2. Fully tempered glass.
3. Heat-strengthened glass.
4. Wired glass.
5. *Approved* rigid plastics.

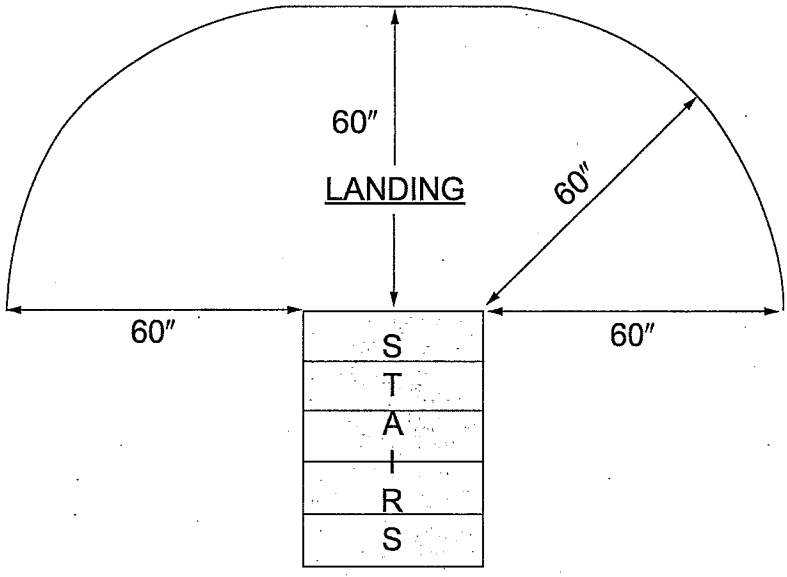

FIGURE R308.4.7
PROHIBITED GLAZING LOCATIONS AT BOTTOM STAIR LANDINGS

R308.6.3 Screens, general. For fully tempered or heat-strengthened glass, a retaining screen meeting the requirements of Section R308.6.7 shall be installed below the glass, except for fully tempered glass that meets either condition listed in Section R308.6.5.

R308.6.4 Screens with multiple glazing. Where the inboard pane is fully tempered, heat-strengthened or wired glass, a retaining screen meeting the requirements of Section R308.6.7 shall be installed below the glass, except for either condition listed in Section R308.6.5. Other panes in the multiple glazing shall be of any type listed in Section R308.6.2.

R308.6.5 Screens not required. Screens shall not be required where fully tempered glass is used as single glazing or the inboard pane in multiple glazing and either of the following conditions are met:

1. Glass area 16 square feet (1.49 m^2) or less. Highest point of glass not more than 12 feet (3658 mm) above a walking surface or other accessible area, nominal glass thickness not more than $^3/_{16}$ inch (4.8 mm), and (for multiple glazing only) the other pane or panes fully tempered, laminated or wired glass.
2. Glass area greater than 16 square feet (1.49 m^2). Glass sloped 30 degrees (0.52 rad) or less from vertical, and highest point of glass not more than 10 feet (3048 mm) above a walking surface or other accessible area.

R308.6.6 Glass in greenhouses. Any glazing material is permitted to be installed without screening in the sloped areas of greenhouses, provided that the greenhouse height at the ridge does not exceed 20 feet (6096 mm) above *grade*.

R308.6.7 Screen characteristics. The screen and its fastenings shall be capable of supporting twice the weight of the glazing, be firmly and substantially fastened to the framing members, and have a mesh opening of not more than 1 inch by 1 inch (25 mm by 25 mm).

R308.6.8 Curbs for skylights. Unit skylights installed in a roof with a pitch flatter than three units vertical in 12 units horizontal (25-percent slope) shall be mounted on a curb extending not less than 4 inches (102 mm) above the plane of the roof unless otherwise specified in the manufacturer's installation instructions.

R308.6.9 Testing and labeling. Unit skylights and tubular daylighting devices shall be tested by an *approved* independent laboratory, and bear a *label* identifying manufacturer, performance grade rating and *approved* inspection agency to indicate compliance with the requirements of AAMA/WDMA/CSA 101/I.S.2/A440.

R308.6.9.1 Comparative analysis for glass-glazed unit skylights. Structural wind load design pressures for glass-glazed unit skylights different than the size tested in accordance with Section R308.6.9 shall be permitted to be different than the design value of the tested unit where determined in accordance with one of the following comparative analysis methods:

1. Structural wind load design pressures for glass-glazed unit skylights smaller than the size tested in accordance with Section R308.6.9 shall be permitted to be higher than the design value of the tested unit provided that such higher pressures are determined by accepted engineering analysis. Components of the smaller unit shall be the same as those of the tested unit. Such calculated design pressures shall be validated by an additional test of the glass-glazed unit skylight having the highest allowable design pressure.
2. In accordance with WDMA I.S. 11.

SECTION R309
GARAGES AND CARPORTS

R309.1 Floor surface. Garage floor surfaces shall be of *approved* noncombustible material.

The area of floor used for parking of automobiles or other vehicles shall be sloped to facilitate the movement of liquids to a drain or toward the main vehicle entry doorway.

R309.2 Carports. Carports shall be open on not less than two sides. Carport floor surfaces shall be of *approved* noncombustible material. Carports not open on two or more sides shall be considered to be a garage and shall comply with the provisions of this section for garages.

Exception: Asphalt surfaces shall be permitted at ground level in carports.

The area of floor used for parking of automobiles or other vehicles shall be sloped to facilitate the movement of liquids to a drain or toward the main vehicle entry doorway.

R309.3 Flood hazard areas. For buildings located in flood hazard areas as established by Table R301.2(1), garage floors shall be:

1. Elevated to or above the design flood elevation as determined in accordance with Section R322; or
2. Located below the design flood elevation provided that the floors are at or above *grade* on not less than one side, are used solely for parking, building access or storage, meet the requirements of Section R322 and are otherwise constructed in accordance with this code.

R309.4 Automatic garage door openers. Automatic garage door openers, if provided, shall be *listed* and *labeled* in accordance with UL 325.

R309.5 Fire sprinklers. Private garages shall be protected by fire sprinklers where the garage wall has been designed based on Table R302.1(2), Footnote a. Sprinklers in garages shall be connected to an automatic sprinkler system that complies with Section P2904. Garage sprinklers shall be residential sprinklers or quick-response sprinklers, designed to provide a density of 0.05 gpm/ft^2. Garage doors shall not be considered obstructions with respect to sprinkler placement.

SECTION R310
EMERGENCY ESCAPE AND RESCUE OPENINGS

R310.1 Emergency escape and rescue opening required. *Basements, habitable attics* and every sleeping room shall have not less than one operable emergency escape and rescue opening. Where *basements* contain one or more sleeping rooms, an emergency escape and rescue opening shall be required in each sleeping room. Emergency escape and rescue openings shall open directly into a public way, or to a *yard* or court that opens to a public way.

Exception: Storm shelters and *basements* used only to house mechanical *equipment* not exceeding a total floor area of 200 square feet (18.58 m^2).

R310.1.1 Operational constraints and opening control devices. Emergency escape and rescue openings shall be operational from the inside of the room without the use of keys, tools or special knowledge. Window opening control devices complying with ASTM F 2090 shall be permitted for use on windows serving as a required emergency escape and rescue opening.

R310.2 Emergency escape and rescue openings. Emergency escape and rescue openings shall have minimum dimensions as specified in this section.

R310.2.1 Minimum opening area. Emergency and escape rescue openings shall have a net clear opening of not less than 5.7 square feet (0.530 m^2). The net clear opening dimensions required by this section shall be obtained by the normal operation of the emergency escape and rescue opening from the inside. The net clear height opening shall be not less than 24 inches (610 mm) and the net clear width shall be not less than 20 inches (508 mm).

Exception: *Grade* floor or below *grade* openings shall have a net clear opening of not less than 5 square feet (0.465 m^2).

R310.2.2 Window sill height. Where a window is provided as the emergency escape and rescue opening, it shall have a sill height of not more than 44 inches (1118 mm) above the floor; where the sill height is below *grade*, it shall be provided with a window well in accordance with Section R310.2.3.

R310.2.3 Window wells. The horizontal area of the window well shall be not less than 9 square feet (0.9 m^2), with a horizontal projection and width of not less than 36 inches (914 mm). The area of the window well shall allow the emergency escape and rescue opening to be fully opened.

Exception: The ladder or steps required by Section R310.2.3.1 shall be permitted to encroach not more than 6 inches (152 mm) into the required dimensions of the window well.

R310.2.3.1 Ladder and steps. Window wells with a vertical depth greater than 44 inches (1118 mm) shall be equipped with a permanently affixed ladder or steps usable with the window in the fully open position. Ladders or steps required by this section shall not be required to comply with Sections R311.7 and R311.8. Ladders or rungs shall have an inside width of not less than 12 inches (305 mm), shall project not less than 3 inches (76 mm) from the wall and shall be spaced not more than 18 inches (457 mm) on center vertically for the full height of the window well.

R310.2.3.2 Drainage. Window wells shall be designed for proper drainage by connecting to the building's foundation drainage system required by Section R405.1 or by an approved alternative method.

Exception: A drainage system for window wells is not required where the foundation is on well-drained soil or sand-gravel mixture soils in accordance with the United Soil Classification System, Group I Soils, as detailed in Table R405.1.

R310.2.4 Emergency escape and rescue openings under decks and porches. Emergency escape and rescue openings shall be permitted to be installed under decks and porches provided that the location of the deck allows the emergency escape and rescue openings to be fully opened and provides a path not less than 36 inches (914 mm) in height to a *yard* or court.

R310.3 Emergency escape and rescue doors. Where a door is provided as the required emergency escape and rescue opening, it shall be permitted to be a side-hinged door or a slider. Where the opening is below the adjacent ground elevation, it shall be provided with a bulkhead enclosure.

R310.3.1 Minimum door opening size. The minimum net clear height opening for any door that serves as an emergency and escape rescue opening shall be in accordance with Section R310.2.1.

R310.3.2 Bulkhead enclosures. Bulkhead enclosures shall provide direct access from the *basement*. The bulkhead enclosure shall provide the minimum net clear opening equal to the door in the fully open position.

R310.3.2.1 Drainage. Bulkhead enclosures shall be designed for proper drainage by connecting to the building's foundation drainage system required by Section R405.1 or by an *approved* alternative method.

Exception: A drainage system for bulkhead enclosures is not required where the foundation is on well-drained soil or sand-gravel mixture soils in accordance with the United Soil Classification System, Group I Soils, as detailed in Table R405.1.

R310.4 Bars, grilles, covers and screens. Bars, grilles, covers, screens or similar devices are permitted to be placed over emergency escape and rescue openings, bulkhead enclosures, or window wells that serve such openings, provided that the minimum net clear opening size complies with Sections R310.1.1 to R310.2.3, and such devices shall be releasable or removable from the inside without the use of a key, tool, special knowledge or force greater than that required for the normal operation of the escape and rescue opening.

R310.5 Dwelling additions. Where *dwelling additions* occur that contain sleeping rooms, an emergency escape and rescue opening shall be provided in each new sleeping room. Where *dwelling additions* occur that have *basements*, an emergency escape and rescue opening shall be provided in the new *basement*.

Exceptions:

1. An emergency escape and rescue opening is not required in a new *basement* that contains a sleeping room with an emergency escape and rescue opening.
2. An emergency escape and rescue opening is not required in a new *basement* where there is an emergency escape and rescue opening in an existing *basement* that is accessible from the new *basement*.

R310.6 Alterations or repairs of existing basements. An emergency escape and rescue opening is not required where existing *basements* undergo alterations or repairs.

Exception: New sleeping rooms created in an existing *basement* shall be provided with emergency escape and rescue openings in accordance with Section R310.1.

SECTION R311
MEANS OF EGRESS

R311.1 Means of egress. *Dwellings* shall be provided with a means of egress in accordance with this section. The means of egress shall provide a continuous and unobstructed path of vertical and horizontal egress travel from all portions of the *dwelling* to the required egress door without requiring travel through a garage. The required egress door shall open directly into a public way or to a *yard* or court that opens to a public way.

R311.2 Egress door. Not less than one egress door shall be provided for each *dwelling* unit. The egress door shall be side-hinged, and shall provide a clear width of not less than 32 inches (813 mm) where measured between the face of the door and the stop, with the door open 90 degrees (1.57 rad). The clear height of the door opening shall be not less than 78 inches (1981 mm) in height measured from the top of the threshold to the bottom of the stop. Other doors shall not be required to comply with these minimum dimensions. Egress doors shall be readily openable from inside the *dwelling* without the use of a key or special knowledge or effort.

R311.3 Floors and landings at exterior doors. There shall be a landing or floor on each side of each exterior door. The width of each landing shall be not less than the door served. Every landing shall have a dimension of not less than 36 inches (914 mm) measured in the direction of travel. The slope at exterior landings shall not exceed $^1/_4$ unit vertical in 12 units horizontal (2 percent).

Exception: Exterior balconies less than 60 square feet (5.6 m^2) and only accessible from a door are permitted to have a landing less than 36 inches (914 mm) measured in the direction of travel.

R311.3.1 Floor elevations at the required egress doors. Landings or finished floors at the required egress door shall be not more than $1^1/_2$ inches (38 mm) lower than the top of the threshold.

Exception: The landing or floor on the exterior side shall be not more than $7^3/_4$ inches (196 mm) below the top of the threshold provided the door does not swing over the landing or floor.

Where exterior landings or floors serving the required egress door are not at *grade*, they shall be provided with access to *grade* by means of a ramp in accordance with Section R311.8 or a stairway in accordance with Section R311.7.

R311.3.2 Floor elevations for other exterior doors. Doors other than the required egress door shall be provided with landings or floors not more than $7^3/_4$ inches (196 mm) below the top of the threshold.

Exception: A top landing is not required where a stairway of not more than two risers is located on the exterior side of the door, provided that the door does not swing over the stairway.

R311.3.3 Storm and screen doors. Storm and screen doors shall be permitted to swing over exterior stairs and landings.

R311.4 Vertical egress. Egress from habitable levels including habitable attics and *basements* not provided with an egress door in accordance with Section R311.2 shall be by a ramp in accordance with Section R311.8 or a stairway in accordance with Section R311.7.

R311.5 Construction.

R311.5.1 Attachment. Exterior landings, decks, balconies, stairs and similar facilities shall be positively anchored to the primary structure to resist both vertical and lateral forces or shall be designed to be self-supporting. Attachment shall not be accomplished by use of toenails or nails subject to withdrawal.

R311.6 Hallways. The width of a hallway shall be not less than 3 feet (914 mm).

R311.7 Stairways.

R311.7.1 Width. Stairways shall be not less than 36 inches (914 mm) in clear width at all points above the permitted handrail height and below the required headroom height. Handrails shall not project more than $4^1/_2$ inches (114 mm) on either side of the stairway and the clear width of the stairway at and below the handrail height, including treads and landings, shall be not less than $31^1/_2$ inches (787 mm) where a handrail is installed on one side and 27 inches (698 mm) where handrails are provided on both sides.

Exception: The width of spiral stairways shall be in accordance with Section R311.7.10.1.

R311.7.2 Headroom. The headroom in stairways shall be not less than 6 feet 8 inches (2032 mm) measured vertically from the sloped line adjoining the tread nosing or

from the floor surface of the landing or platform on that portion of the stairway.

Exceptions:

1. Where the nosings of treads at the side of a flight extend under the edge of a floor opening through which the stair passes, the floor opening shall be allowed to project horizontally into the required headroom not more than $4^3/_4$ inches (121 mm).
2. The headroom for spiral stairways shall be in accordance with Section R311.7.10.1.

R311.7.3 Vertical rise. A flight of stairs shall not have a vertical rise larger than 147 inches (3734 mm) between floor levels or landings.

R311.7.4 Walkline. The walkline across winder treads shall be concentric to the curved direction of travel through the turn and located 12 inches (305 mm) from the side where the winders are narrower. The 12-inch (305 mm) dimension shall be measured from the widest point of the clear stair width at the walking surface of the winder. If winders are adjacent within the flight, the point of the widest clear stair width of the adjacent winders shall be used.

R311.7.5 Stair treads and risers. Stair treads and risers shall meet the requirements of this section. For the purposes of this section, dimensions and dimensioned surfaces shall be exclusive of carpets, rugs or runners.

R311.7.5.1 Risers. The riser height shall be not more than $7^3/_4$ inches (196 mm). The riser shall be measured vertically between leading edges of the adjacent treads. The greatest riser height within any flight of stairs shall not exceed the smallest by more than $^3/_8$ inch (9.5 mm). Risers shall be vertical or sloped from the underside of the nosing of the tread above at an angle not more than 30 degrees (0.51 rad) from the vertical. Open risers are permitted provided that the openings located more than 30 inches (762 mm), as measured vertically, to the floor or grade below do not permit the passage of a 4-inch-diameter (102 mm) sphere.

Exceptions:

1. The opening between adjacent treads is not limited on spiral stairways.
2. The riser height of spiral stairways shall be in accordance with Section R311.7.10.1.

R311.7.5.2 Treads. The tread depth shall be not less than 10 inches (254 mm). The tread depth shall be measured horizontally between the vertical planes of the foremost projection of adjacent treads and at a right angle to the tread's leading edge. The greatest tread depth within any flight of stairs shall not exceed the smallest by more than $^3/_8$ inch (9.5 mm).

R311.7.5.2.1 Winder treads. Winder treads shall have a tread depth of not less than 10 inches (254 mm) measured between the vertical planes of the foremost projection of adjacent treads at the intersections with the walkline. Winder treads shall have a tread depth of not less than 6 inches (152 mm) at any point within the clear width of the stair. Within any flight of stairs, the largest winder tread depth at the walkline shall not exceed the smallest winder tread by more than $^3/_8$ inch (9.5 mm). Consistently shaped winders at the walkline shall be allowed within the same flight of stairs as rectangular treads and do not have to be within $^3/_8$ inch (9.5 mm) of the rectangular tread depth.

Exception: The tread depth at spiral stairways shall be in accordance with Section R311.7.10.1.

R311.7.5.3 Nosings. The radius of curvature at the nosing shall be not greater than $^9/_{16}$ inch (14 mm). A nosing projection not less than $^3/_4$ inch (19 mm) and not more than $1^1/_4$ inches (32 mm) shall be provided on stairways with solid risers. The greatest nosing projection shall not exceed the smallest nosing projection by more than $^3/_8$ inch (9.5 mm) between two stories, including the nosing at the level of floors and landings. Beveling of nosings shall not exceed $^1/_2$ inch (12.7 mm).

Exception: A nosing projection is not required where the tread depth is not less than 11 inches (279 mm).

R311.7.5.4 Exterior plastic composite stair treads. Plastic composite exterior stair treads shall comply with the provisions of this section and Section R507.3.

R311.7.6 Landings for stairways. There shall be a floor or landing at the top and bottom of each stairway. The width perpendicular to the direction of travel shall be not less than the width of the flight served. Landings of shapes other than square or rectangular shall be permitted provided that the depth at the walk line and the total area is not less than that of a quarter circle with a radius equal to the required landing width. Where the stairway has a straight run, the depth in the direction of travel shall be not less than 36 inches (914 mm).

Exception: A floor or landing is not required at the top of an interior flight of stairs, including stairs in an enclosed garage, provided that a door does not swing over the stairs.

R311.7.7 Stairway walking surface. The walking surface of treads and landings of stairways shall be sloped not steeper than one unit vertical in 48 inches horizontal (2-percent slope).

R311.7.8 Handrails. Handrails shall be provided on not less than one side of each continuous run of treads or flight with four or more risers.

R311.7.8.1 Height. Handrail height, measured vertically from the sloped plane adjoining the tread nosing, or finish surface of ramp slope, shall be not less than 34 inches (864 mm) and not more than 38 inches (965 mm).

Exceptions:

1. The use of a volute, turnout or starting easing shall be allowed over the lowest tread.
2. Where handrail fittings or bendings are used to provide continuous transition between flights, transitions at winder treads, the transition from handrail to *guard*, or used at the start of a flight,

the handrail height at the fittings or bendings shall be permitted to exceed 38 inches (956 mm).

R311.7.8.2 Continuity. Handrails for stairways shall be continuous for the full length of the flight, from a point directly above the top riser of the flight to a point directly above the lowest riser of the flight. Handrail ends shall be returned or shall terminate in newel posts or safety terminals. Handrails adjacent to a wall shall have a space of not less than $1^1/_2$ inches (38 mm) between the wall and the handrails.

Exceptions:

1. Handrails shall be permitted to be interrupted by a newel post at the turn.
2. The use of a volute, turnout, starting easing or starting newel shall be allowed over the lowest tread.

R311.7.8.3 Grip-size. Required handrails shall be of one of the following types or provide equivalent graspability.

1. Type I. Handrails with a circular cross section shall have an outside diameter of not less than $1^1/_4$ inches (32 mm) and not greater than 2 inches (51 mm). If the handrail is not circular, it shall have a perimeter dimension of not less than 4 inches (102 mm) and not greater than $6^1/_4$ inches (160 mm) with a cross section of dimension of not more than $2^1/_4$ inches (57 mm). Edges shall have a radius of not less than 0.01 inch (0.25 mm).
2. Type II. Handrails with a perimeter greater than $6^1/_4$ inches (160 mm) shall have a graspable finger recess area on both sides of the profile. The finger recess shall begin within a distance of $^3/_4$ inch (19 mm) measured vertically from the tallest portion of the profile and achieve a depth of not less than $^5/_{16}$ inch (8 mm) within $^7/_8$ inch (22 mm) below the widest portion of the profile. This required depth shall continue for not less than $^3/_8$ inch (10 mm) to a level that is not less than $1^3/_4$ inches (45 mm) below the tallest portion of the profile. The width of the handrail above the recess shall be not less than $1^1/_4$ inches (32 mm) and not more than $2^3/_4$ inches (70 mm). Edges shall have a radius of not less than 0.01 inch (0.25 mm).

R311.7.8.4 Exterior plastic composite handrails. Plastic composite exterior handrails shall comply with the requirements of Section R507.3.

R311.7.9 Illumination. Stairways shall be provided with illumination in accordance with Section R303.7.

R311.7.10 Special stairways. Spiral stairways and bulkhead enclosure stairways shall comply with the requirements of Section R311.7 except as specified in Sections R311.7.10.1 and R311.7.10.2.

R311.7.10.1 Spiral stairways. Spiral stairways are permitted, provided that the clear width at and below the handrail is not less than 26 inches (660 mm) and the walkline radius is not greater than $24^1/_2$ inches (622 mm). Each tread shall have a depth of not less than $6^3/_4$ inches (171 mm) at the walkline. All treads shall be identical, and the rise shall be not more than $9^1/_2$ inches (241 mm). Headroom shall be not less than 6 feet 6 inches (1982 mm).

R311.7.10.2 Bulkhead enclosure stairways. Stairways serving bulkhead enclosures, not part of the required building egress, providing access from the outside *grade* level to the *basement* shall be exempt from the requirements of Sections R311.3 and R311.7 where the height from the *basement* finished floor level to *grade* adjacent to the stairway is not more than 8 feet (2438 mm) and the *grade* level opening to the stairway is covered by a bulkhead enclosure with hinged doors or other *approved* means.

R311.7.11 Alternating tread devices. Alternating tread devices shall not be used as an element of a means of egress. Alternating tread devices shall be permitted provided that the required means of egress stairway or ramp serves the same space at each adjoining level or where a means of egress is not required. The clear width at and below the handrails shall be not less than 20 inches (508 mm).

R311.7.11.1 Treads of alternating tread devices. Alternating tread devices shall have a tread depth of not less than 5 inches (127 mm), a projected tread depth of not less than $8^1/_2$ inches (216 mm), a tread width of not less than 7 inches (178 mm) and a riser height of not more than $9^1/_2$ inches (241 mm). The tread depth shall be measured horizontally between the vertical planes of the foremost projections of adjacent treads. The riser height shall be measured vertically between the leading edges of adjacent treads. The riser height and tread depth provided shall result in an angle of ascent from the horizontal of between 50 and 70 degrees (0.87 and 1.22 rad). The initial tread of the device shall begin at the same elevation as the platform, landing or floor surface.

R311.7.11.2 Handrails of alternating tread devices. Handrails shall be provided on both sides of alternating tread devices and shall comply with Sections R311.7.8.2 to R311.7.8.4. Handrail height shall be uniform, not less than 30 inches (762 mm) and not more than 34 inches (864 mm).

R311.7.12 Ships ladders. Ships ladders shall not be used as an element of a means of egress. Ships ladders shall be permitted provided that a required means of egress stairway or ramp serves the same space at each adjoining level or where a means of egress is not required. The clear width at and below the handrails shall be not less than 20 inches.

R311.7.12.1 Treads of ships ladders. Treads shall have a depth of not less than 5 inches (127 mm). The tread shall be projected such that the total of the tread depth plus the nosing projection is not less than $8^1/_2$ inches (216 mm). The riser height shall be not more than $9^1/_2$ inches (241 mm).

R311.7.12.2 Handrails of ships ladders. Handrails shall be provided on both sides of ships ladders and shall comply with Sections R311.7.8.2 to R311.7.8.4. Handrail height shall be uniform, not less than 30 inches (762 mm) and not more than 34 inches (864 mm).

R311.8 Ramps.

R311.8.1 Maximum slope. Ramps serving the egress door required by Section R311.2 shall have a slope of not more than 1 unit vertical in 12 units horizontal (8.3-percent slope). All other ramps shall have a maximum slope of 1 unit vertical in 8 units horizontal (12.5 percent).

Exception: Where it is technically infeasible to comply because of site constraints, ramps shall have a slope of not more than 1 unit vertical in 8 units horizontal (12.5 percent).

R311.8.2 Landings required. There shall be a floor or landing at the top and bottom of each ramp, where doors open onto ramps, and where ramps change directions. The width of the landing perpendicular to the ramp slope shall be not less than 36 inches (914 mm).

R311.8.3 Handrails required. Handrails shall be provided on not less than one side of ramps exceeding a slope of one unit vertical in 12 units horizontal (8.33-percent slope).

R311.8.3.1 Height. Handrail height, measured above the finished surface of the ramp slope, shall be not less than 34 inches (864 mm) and not more than 38 inches (965 mm).

R311.8.3.2 Grip size. Handrails on ramps shall comply with Section R311.7.8.3.

R311.8.3.3 Continuity. Handrails where required on ramps shall be continuous for the full length of the ramp. Handrail ends shall be returned or shall terminate in newel posts or safety terminals. Handrails adjacent to a wall shall have a space of not less than $1^1/_2$ inches (38 mm) between the wall and the handrails.

SECTION R312
GUARDS AND WINDOW FALL PROTECTION

R312.1 Guards. *Guards* shall be provided in accordance with Sections R312.1.1 through R312.1.4.

R312.1.1 Where required. *Guards* shall be located along open-sided walking surfaces, including stairs, ramps and landings, that are located more than 30 inches (762 mm) measured vertically to the floor or *grade* below at any point within 36 inches (914 mm) horizontally to the edge of the open side. Insect screening shall not be considered as a *guard*.

R312.1.2 Height. Required *guards* at open-sided walking surfaces, including stairs, porches, balconies or landings, shall be not less than 36 inches (914 mm) in height as measured vertically above the adjacent walking surface or the line connecting the leading edges of the treads.

Exceptions:

1. *Guards* on the open sides of stairs shall have a height not less than 34 inches (864 mm) measured vertically from a line connecting the leading edges of the treads.
2. Where the top of the *guard* serves as a handrail on the open sides of stairs, the top of the *guard* shall be not less than 34 inches (864 mm) and not more than 38 inches (965 mm) as measured vertically from a line connecting the leading edges of the treads.

R312.1.3 Opening limitations. Required *guards* shall not have openings from the walking surface to the required *guard* height that allow passage of a sphere 4 inches (102 mm) in diameter.

Exceptions:

1. The triangular openings at the open side of stair, formed by the riser, tread and bottom rail of a *guard*, shall not allow passage of a sphere 6 inches (153 mm) in diameter.
2. *Guards* on the open side of stairs shall not have openings that allow passage of a sphere $4^3/_8$ inches (111 mm) in diameter.

R312.1.4 Exterior plastic composite guards. Plastic composite exterior *guards* shall comply with the requirements of Section R317.4.

R312.2 Window fall protection. Window fall protection shall be provided in accordance with Sections R312.2.1 and R312.2.2.

R312.2.1 Window sills. In dwelling units, where the top of the sill of an operable window opening is located less than 24 inches (610 mm) above the finished floor and greater than 72 inches (1829 mm) above the finished *grade* or other surface below on the exterior of the building, the operable window shall comply with one of the following:

1. Operable windows with openings that will not allow a 4-inch-diameter (102 mm) sphere to pass through the opening where the opening is in its largest opened position.
2. Operable windows that are provided with window fall prevention devices that comply with ASTM F 2090.
3. Operable windows that are provided with window opening control devices that comply with Section R312.2.2.

R312.2.2 Window opening control devices. Window opening control devices shall comply with ASTM F 2090. The window opening control device, after operation to release the control device allowing the window to fully open, shall not reduce the net clear opening area of the window unit to less than the area required by Section R310.2.1.

SECTION R313
AUTOMATIC FIRE SPRINKLER SYSTEMS

R313.1 Townhouse automatic fire sprinkler systems. An automatic residential fire sprinkler system shall be installed in *townhouses*.

Exception: An automatic residential fire sprinkler system shall not be required where *additions* or *alterations* are made to existing *townhouses* that do not have an automatic residential fire sprinkler system installed.

R313.1.1 Design and installation. Automatic residential fire sprinkler systems for *townhouses* shall be designed and installed in accordance with Section P2904 or NFPA 13D.

R313.2 One- and two-family dwellings automatic fire systems. An automatic residential fire sprinkler system shall be installed in one- and two-family *dwellings*.

Exception: An automatic residential fire sprinkler system shall not be required for *additions* or *alterations* to existing buildings that are not already provided with an automatic residential sprinkler system.

R313.2.1 Design and installation. Automatic residential fire sprinkler systems shall be designed and installed in accordance with Section P2904 or NFPA 13D.

SECTION R314
SMOKE ALARMS

R314.1 General. Smoke alarms shall comply with NFPA 72 and Section R314.

R314.1.1 Listings. Smoke alarms shall be *listed* in accordance with UL 217. Combination smoke and carbon monoxide alarms shall be *listed* in accordance with UL 217 and UL 2034.

R314.2 Where required. Smoke alarms shall be provided in accordance with this section.

R314.2.1 New construction. Smoke alarms shall be provided in *dwelling units*.

R314.2.2 Alterations, repairs and additions. Where *alterations*, *repairs* or *additions* requiring a permit occur, or where one or more sleeping rooms are added or created in existing *dwellings*, the individual *dwelling unit* shall be equipped with smoke alarms located as required for new *dwellings*.

Exceptions:

1. Work involving the exterior surfaces of *dwellings*, such as the replacement of roofing or siding, the *addition* or replacement of windows or doors, or the addition of a porch or deck, are exempt from the requirements of this section.
2. Installation, alteration or repairs of plumbing or mechanical systems are exempt from the requirements of this section.

R314.3 Location. Smoke alarms shall be installed in the following locations:

1. In each sleeping room.
2. Outside each separate sleeping area in the immediate vicinity of the bedrooms.
3. On each additional *story* of the *dwelling*, including *basements* and *habitable attics* and not including crawl spaces and uninhabitable *attics*. In *dwellings* or *dwelling units* with split levels and without an intervening door between the adjacent levels, a smoke alarm installed on the upper level shall suffice for the adjacent lower level provided that the lower level is less than one full *story* below the upper level.
4. Smoke alarms shall be installed not less than 3 feet (914 mm) horizontally from the door or opening of a bathroom that contains a bathtub or shower unless this would prevent placement of a smoke alarm required by Section R314.3.

R314.3.1 Installation near cooking appliances. Smoke alarms shall not be installed in the following locations unless this would prevent placement of a smoke alarm in a location required by Section R314.3.

1. Ionization smoke alarms shall not be installed less than 20 feet (6096 mm) horizontally from a permanently installed cooking *appliance*.
2. Ionization smoke alarms with an alarm-silencing switch shall not be installed less than 10 feet (3048 mm) horizontally from a permanently installed cooking *appliance*.
3. Photoelectric smoke alarms shall not be installed less than 6 feet (1828 mm) horizontally from a permanently installed cooking *appliance*.

R314.4 Interconnection. Where more than one smoke alarm is required to be installed within an individual dwelling unit in accordance with Section R314.3, the alarm devices shall be interconnected in such a manner that the actuation of one alarm will activate all of the alarms in the individual *dwelling unit*. Physical interconnection of smoke alarms shall not be required where listed wireless alarms are installed and all alarms sound upon activation of one alarm.

Exception: Interconnection of smoke alarms in existing areas shall not be required where *alterations* or repairs do not result in removal of interior wall or ceiling finishes exposing the structure, unless there is an *attic*, crawl space or *basement* available that could provide access for interconnection without the removal of interior finishes.

R314.5 Combination alarms. Combination smoke and carbon monoxide alarms shall be permitted to be used in lieu of smoke alarms.

R314.6 Power source. Smoke alarms shall receive their primary power from the building wiring where such wiring is served from a commercial source and, where primary power is interrupted, shall receive power from a battery. Wiring shall be permanent and without a disconnecting switch other than those required for overcurrent protection.

Exceptions:

1. Smoke alarms shall be permitted to be battery operated where installed in buildings without commercial power.

2. Smoke alarms installed in accordance with Section R314.2.2 shall be permitted to be battery powered.

R314.7 Fire alarm systems. Fire alarm systems shall be permitted to be used in lieu of smoke alarms and shall comply with Sections R314.7.1 through R314.7.4.

R314.7.1 General. Fire alarm systems shall comply with the provisions of this code and the household fire warning *equipment* provisions of NFPA 72. Smoke detectors shall be *listed* in accordance with UL 268.

R314.7.2 Location. Smoke detectors shall be installed in the locations specified in Section R314.3.

R314.7.3 Permanent fixture. Where a household fire alarm system is installed, it shall become a permanent fixture of the occupancy, owned by the homeowner.

R314.7.4 Combination detectors. Combination smoke and carbon monoxide detectors shall be permitted to be installed in fire alarm systems in lieu of smoke detectors, provided that they are *listed* in accordance with UL 268 and UL 2075.

SECTION R315
CARBON MONOXIDE ALARMS

R315.1 General. Carbon monoxide alarms shall comply with Section R315.

R315.1.1 Listings. Carbon monoxide alarms shall be *listed* in accordance with UL 2034. Combination carbon monoxide and smoke alarms shall be *listed* in accordance with UL 2034 and UL 217.

R315.2 Where required. Carbon monoxide alarms shall be provided in accordance with Sections R315.2.1 and R315.2.2.

R315.2.1 New construction. For new construction, carbon monoxide alarms shall be provided in dwelling units where either or both of the following conditions exist.

1. The *dwelling unit* contains a fuel-fired *appliance.*
2. The *dwelling unit* has an attached garage with an opening that communicates with the dwelling unit.

R315.2.2 Alterations, repairs and additions. Where *alterations*, repairs or *additions* requiring a permit occur, or where one or more sleeping rooms are added or created in existing *dwellings*, the individual *dwelling unit* shall be equipped with carbon monoxide alarms located as required for new *dwellings*.

Exceptions:

1. Work involving the exterior surfaces of *dwellings*, such as the replacement of roofing or siding, or the addition or replacement of windows or doors, or the addition of a porch or deck, is exempt from the requirements of this section.
2. Installation, alteration or repairs of plumbing or mechanical systems are exempt from the requirements of this section.

R315.3 Location. Carbon monoxide alarms in *dwelling units* shall be installed outside of each separate sleeping area in the immediate vicinity of the bedrooms. Where a fuel-burning *appliance* is located within a bedroom or its attached bathroom, a carbon monoxide alarm shall be installed within the bedroom.

R315.4 Combination alarms. Combination carbon monoxide and smoke alarms shall be permitted to be used in lieu of carbon monoxide alarms.

R315.5 Power source. Carbon monoxide alarms shall receive their primary power from the building wiring where such wiring is served from a commercial source and, where primary power is interrupted, shall receive power from a battery. Wiring shall be permanent and without a disconnecting switch other than those required for overcurrent protection.

Exceptions:

1. Carbon monoxide alarms shall be permitted to be battery operated where installed in buildings without commercial power.
2. Carbon monoxide alarms installed in accordance with Section R315.2.2 shall be permitted to be battery powered.

R315.6 Carbon monoxide detection systems. Carbon monoxide detection systems shall be permitted to be used in lieu of carbon monoxide alarms and shall comply with Sections R315.6.1 through R315.6.4.

R315.6.1 General. Household carbon monoxide detection systems shall comply with NFPA 720. Carbon monoxide detectors shall be *listed* in accordance with UL 2075.

R315.6.2 Location. Carbon monoxide detectors shall be installed in the locations specified in Section R315.3. These locations supersede the locations specified in NFPA 720.

R315.6.3 Permanent fixture. Where a household carbon monoxide detection system is installed, it shall become a permanent fixture of the occupancy and owned by the homeowner.

R315.6.4 Combination detectors. Combination carbon monoxide and smoke detectors shall be permitted to be installed in carbon monoxide detection systems in lieu of carbon monoxide detectors, provided that they are *listed* in accordance with UL 2075 and UL 268.

SECTION R316
FOAM PLASTIC

R316.1 General. The provisions of this section shall govern the materials, design, application, construction and installation of foam plastic materials.

R316.2 Labeling and identification. Packages and containers of foam plastic insulation and foam plastic insulation components delivered to the job site shall bear the *label* of an *approved agency* showing the manufacturer's name, the product listing, product identification and information sufficient to determine that the end use will comply with the requirements.

R316.3 Surface burning characteristics. Unless otherwise allowed in Section R316.5, foam plastic or foam plastic cores used as a component in manufactured assemblies used in

building construction shall have a flame spread index of not more than 75 and shall have a smoke-developed index of not more than 450 when tested in the maximum thickness and density intended for use in accordance with ASTM E 84 or UL 723. Loose-fill-type foam plastic insulation shall be tested as board stock for the flame spread index and smoke-developed index.

Exception: Foam plastic insulation more than 4 inches (102 mm) thick shall have a flame spread index of not more than 75 and a smoke-developed index of not more than 450 where tested at a thickness of not more than 4 inches (102 mm), provided that the end use is *approved* in accordance with Section R316.6 using the thickness and density intended for use.

R316.4 Thermal barrier. Unless otherwise allowed in Section R316.5, foam plastic shall be separated from the interior of a building by an *approved* thermal barrier of not less than $^1/_2$-inch (12.7 mm) gypsum wallboard, $^{23}/_{32}$-inch (18.2 mm) wood structural panel or a material that is tested in accordance with and meets the acceptance criteria of both the Temperature Transmission Fire Test and the Integrity Fire Test of NFPA 275.

R316.5 Specific requirements. The following requirements shall apply to these uses of foam plastic unless specifically *approved* in accordance with Section R316.6 or by other sections of the code or the requirements of Sections R316.2 through R316.4 have been met.

R316.5.1 Masonry or concrete construction. The thermal barrier specified in Section R316.4 is not required in a masonry or concrete wall, floor or roof when the foam plastic insulation is separated from the interior of the building by not less than a 1-inch (25 mm) thickness of masonry or concrete.

R316.5.2 Roofing. The thermal barrier specified in Section R316.4 is not required where the foam plastic in a roof assembly or under a roof covering is installed in accordance with the code and the manufacturer's instructions and is separated from the interior of the building by tongue-and-groove wood planks or wood structural panel sheathing, in accordance with Section R803, that is not less than $^{15}/_{32}$ inch (11.9 mm) thick bonded with exterior glue, identified as Exposure 1 and with edges supported by blocking or tongue-and-groove joints or an equivalent material. The smoke-developed index for roof applications shall not be limited.

R316.5.3 Attics. The thermal barrier specified in Section R316.4 is not required where all of the following apply:

1. *Attic* access is required by Section R807.1.
2. The space is entered only for purposes of repairs or maintenance.
3. The foam plastic insulation has been tested in accordance with Section R316.6 or the foam plastic insulation is protected against ignition using one of the following ignition barrier materials:
   - 3.1. $1^1/_2$-inch-thick (38 mm) mineral fiber insulation.
   - 3.2. $^1/_4$-inch-thick (6.4 mm) wood structural panels.
   - 3.3. $^3/_8$-inch (9.5 mm) particleboard.
   - 3.4. $^1/_4$-inch (6.4 mm) hardboard.
   - 3.5. $^3/_8$-inch (9.5 mm) gypsum board.
   - 3.6. Corrosion-resistant steel having a base metal thickness of 0.016 inch (0.406 mm).
   - 3.7. $1^1/_2$-inch-thick (38 mm) cellulose insulation; or
   - 3.8. $^1/_4$-inch (6.4 mm) fiber-cement panel, soffit or backer board.

The ignition barrier is not required where the foam plastic insulation has been tested in accordance with Section R316.6.

R316.5.4 Crawl spaces. The thermal barrier specified in Section R316.4 is not required where all of the following apply:

1. Crawl space access is required by Section R408.4.
2. Entry is made only for purposes of repairs or maintenance.
3. The foam plastic insulation has been tested in accordance with Section R316.6 or the foam plastic insulation is protected against ignition using one of the following ignition barrier materials:
   - 3.1. $1^1/_2$-inch-thick (38 mm) mineral fiber insulation;
   - 3.2. $^1/_4$-inch-thick (6.4 mm) wood structural panels;
   - 3.3. $^3/_8$-inch (9.5 mm) particleboard;
   - 3.4. $^1/_4$-inch (6.4 mm) hardboard;
   - 3.5. $^3/_8$-inch (9.5 mm) gypsum board; or
   - 3.6. Corrosion-resistant steel having a base metal thickness of 0.016 inch (0.406 mm).

R316.5.5 Foam-filled exterior doors. Foam-filled exterior doors are exempt from the requirements of Sections R316.3 and R316.4.

R316.5.6 Foam-filled garage doors. Foam-filled garage doors in attached or detached garages are exempt from the requirements of Sections R316.3 and R316.4.

R316.5.7 Foam backer board. The thermal barrier specified in Section R316.4 is not required where siding backer board foam plastic insulation has a thickness of not more than 0.5 inch (12.7 mm) and a potential heat of not more than 2000 Btu per square foot (22 720 kJ/m^2) when tested in accordance with NFPA 259 provided that:

1. The foam plastic insulation is separated from the interior of the building by not less than 2 inches (51 mm) of mineral fiber insulation;
2. The foam plastic insulation is installed over existing *exterior wall* finish in conjunction with re-siding; or

3. The foam plastic insulation has been tested in accordance with Section R316.6.

R316.5.8 Re-siding. The thermal barrier specified in Section R316.4 is not required where the foam plastic insulation is installed over existing *exterior wall* finish in conjunction with re-siding provided that the foam plastic has a thickness of not more than 0.5 inch (12.7 mm) and a potential heat of not more than 2000 Btu per square foot (22 720 kJ/m^2) when tested in accordance with NFPA 259.

R316.5.9 Interior trim. The thermal barrier specified in Section R316.4 is not required for exposed foam plastic interior trim, provided that all of the following are met:

1. The density is not less than 20 pounds per cubic foot (320 kg/m^3).
2. The thickness of the trim is not more than 0.5 inch (12.7 mm) and the width is not more than 8 inches (204 mm).
3. The interior trim shall not constitute more than 10 percent of the aggregate wall and ceiling area of any room or space.
4. The flame spread index does not exceed 75 when tested per ASTM E 84 or UL 723. The smoke-developed index is not limited.

R316.5.10 Interior finish. Foam plastics shall be permitted as interior finish where *approved* in accordance with Section R316.6. Foam plastics that are used as an interior finish shall meet the flame spread index and smoke-developed index requirements of Sections R302.9.1 and R302.9.2.

R316.5.11 Sill plates and headers. Foam plastic shall be permitted to be spray applied to sill plates and headers or installed in the perimeter joist space without the thermal barrier specified in Section R316.4 subject to all of the following:

1. The thickness of the foam plastic shall be not more than $3^1/_4$ inches (83 mm).
2. The density of the foam plastic shall be in the range of 0.5 to 2.0 pounds per cubic foot (8 to 32 kg/m^3).
3. The foam plastic shall have a flame spread index of 25 or less and an accompanying smoke-developed index of 450 or less when tested in accordance with ASTM E 84 or UL 723.

R316.5.12 Sheathing. Foam plastic insulation used as sheathing shall comply with Section R316.3 and Section R316.4. Where the foam plastic sheathing is exposed to the *attic* space at a gable or kneewall, the provisions of Section R316.5.3 shall apply. Where foam plastic insulation is used as *exterior wall* sheathing on framed wall assemblies, it shall comply with Section R316.8.

R316.5.13 Floors. The thermal barrier specified in Section R316.4 is not required to be installed on the walking surface of a structural floor system that contains foam plastic insulation when the foam plastic is covered by not more than a nominal $^1/_2$-inch-thick (12.7 mm) wood structural panel or equivalent. The thermal barrier specified in Section R316.4 is required on the underside of the structural floor system that contains foam plastic insulation when the underside of the structural floor system is exposed to the interior of the building.

R316.6 Specific approval. Foam plastic not meeting the requirements of Sections R316.3 through R316.5 shall be specifically *approved* on the basis of one of the following *approved* tests: NFPA 286 with the acceptance criteria of Section R302.9.4, FM 4880, UL 1040 or UL 1715, or fire tests related to actual end-use configurations. Approval shall be based on the actual end-use configuration and shall be performed on the finished foam plastic assembly in the maximum thickness intended for use. Assemblies tested shall include seams, joints and other typical details used in the installation of the assembly and shall be tested in the manner intended for use.

R316.7 Termite damage. The use of foam plastics in areas of "very heavy" termite infestation probability shall be in accordance with Section R318.4.

R316.8 Wind resistance. Foam plastic insulation complying with ASTM C 578 and ASTM C 1289 and used as *exterior wall* sheathing on framed wall assemblies shall comply with SBCA FS 100 for wind pressure resistance unless installed directly over a sheathing material that is separately capable of resisting the wind load or otherwise exempted from the scope of SBCA FS 100.

SECTION R317
PROTECTION OF WOOD AND WOOD-BASED PRODUCTS AGAINST DECAY

R317.1 Location required. Protection of wood and wood-based products from decay shall be provided in the following locations by the use of naturally durable wood or wood that is preservative-treated in accordance with AWPA U1 for the species, product, preservative and end use. Preservatives shall be listed in Section 4 of AWPA U1.

1. Wood joists or the bottom of a wood structural floor when closer than 18 inches (457 mm) or wood girders when closer than 12 inches (305 mm) to the exposed ground in crawl spaces or unexcavated area located within the periphery of the building foundation.
2. Wood framing members that rest on concrete or masonry exterior foundation walls and are less than 8 inches (203 mm) from the exposed ground.
3. Sills and sleepers on a concrete or masonry slab that is in direct contact with the ground unless separated from such slab by an impervious moisture barrier.
4. The ends of wood girders entering exterior masonry or concrete walls having clearances of less than $^1/_2$ inch (12.7 mm) on tops, sides and ends.
5. Wood siding, sheathing and wall framing on the exterior of a building having a clearance of less than 6 inches (152 mm) from the ground or less than 2 inches (51 mm) measured vertically from concrete steps, porch slabs, patio slabs and similar horizontal surfaces exposed to the weather.

6. Wood structural members supporting moisture-permeable floors or roofs that are exposed to the weather, such as concrete or masonry slabs, unless separated from such floors or roofs by an impervious moisture barrier.
7. Wood furring strips or other wood framing members attached directly to the interior of exterior masonry walls or concrete walls below *grade* except where an *approved* vapor retarder is applied between the wall and the furring strips or framing members.

R317.1.1 Field treatment. Field-cut ends, notches and drilled holes of preservative-treated wood shall be treated in the field in accordance with AWPA M4.

R317.1.2 Ground contact. All wood in contact with the ground, embedded in concrete in direct contact with the ground or embedded in concrete exposed to the weather that supports permanent structures intended for human occupancy shall be *approved* pressure-preservative-treated wood suitable for ground contact use, except that untreated wood used entirely below groundwater level or continuously submerged in fresh water shall not be required to be pressure-preservative treated.

R317.1.3 Geographical areas. In geographical areas where experience has demonstrated a specific need, *approved* naturally durable or pressure-preservative-treated wood shall be used for those portions of wood members that form the structural supports of buildings, balconies, porches or similar permanent building appurtenances when those members are exposed to the weather without adequate protection from a roof, eave, overhang or other covering that would prevent moisture or water accumulation on the surface or at joints between members. Depending on local experience, such members may include:

1. Horizontal members such as girders, joists and decking.
2. Vertical members such as posts, poles and columns.
3. Both horizontal and vertical members.

R317.1.4 Wood columns. Wood columns shall be *approved* wood of natural decay resistance or *approved* pressure-preservative-treated wood.

Exceptions:

1. Columns exposed to the weather or in *basements* where supported by concrete piers or metal pedestals projecting 1 inch (25 mm) above a concrete floor or 6 inches (152 mm) above exposed earth and the earth is covered by an *approved* impervious moisture barrier.
2. Columns in enclosed crawl spaces or unexcavated areas located within the periphery of the building when supported by a concrete pier or metal pedestal at a height more than 8 inches (203 mm) from exposed earth and the earth is covered by an impervious moisture barrier.
3. Deck posts supported by concrete piers or metal pedestals projecting not less than 1 inch (25 mm) above a concrete floor or 6 inches (152 mm) above exposed earth.

R317.1.5 Exposed glued-laminated timbers. The portions of glued-laminated timbers that form the structural supports of a building or other structure and are exposed to weather and not properly protected by a roof, eave or similar covering shall be pressure treated with preservative, or be manufactured from naturally durable or preservative-treated wood.

R317.2 Quality mark. Lumber and plywood required to be pressure-preservative treated in accordance with Section R318.1 shall bear the quality *mark* of an *approved* inspection agency that maintains continuing supervision, testing and inspection over the quality of the product and that has been *approved* by an accreditation body that complies with the requirements of the American Lumber Standard Committee treated wood program.

R317.2.1 Required information. The required quality *mark* on each piece of pressure-preservative-treated lumber or plywood shall contain the following information:

1. Identification of the treating plant.
2. Type of preservative.
3. The minimum preservative retention.
4. End use for which the product was treated.
5. Standard to which the product was treated.
6. Identity of the *approved* inspection agency.
7. The designation "Dry," if applicable.

Exception: Quality *marks* on lumber less than 1 inch (25 mm) nominal thickness, or lumber less than nominal 1 inch by 5 inches (25 mm by 127 mm) or 2 inches by 4 inches (51 mm by 102 mm) or lumber 36 inches (914 mm) or less in length shall be applied by stamping the faces of exterior pieces or by end labeling not less than 25 percent of the pieces of a bundled unit.

R317.3 Fasteners and connectors in contact with preservative-treated and fire-retardant-treated wood. Fasteners, including nuts and washers, and connectors in contact with preservative-treated wood and fire-retardant-treated wood shall be in accordance with this section. The coating weights for zinc-coated fasteners shall be in accordance with ASTM A 153. Stainless steel driven fasteners shall be in accordance with the material requirements of ASTM F 1667.

R317.3.1 Fasteners for preservative-treated wood. Fasteners, including nuts and washers, for preservative-treated wood shall be of hot-dipped, zinc-coated galvanized steel, stainless steel, silicon bronze or copper. Coating types and weights for connectors in contact with preservative-treated wood shall be in accordance with the connector manufacturer's recommendations. In the absence of manufacturer's recommendations, a minimum of ASTM A 653 type G185 zinc-coated galvanized steel, or equivalent, shall be used.

Exceptions:

1. $^1/_2$-inch-diameter (12.7 mm) or greater steel bolts.

2. Fasteners other than nails and timber rivets shall be permitted to be of mechanically deposited zinc-coated steel with coating weights in accordance with ASTM B 695, Class 55 minimum.
3. Plain carbon steel fasteners in SBX/DOT and zinc borate preservative-treated wood in an interior, dry environment shall be permitted.

R317.3.2 Fastenings for wood foundations. Fastenings, including nuts and washers, for wood foundations shall be as required in AF&PA PWF.

R317.3.3 Fasteners for fire-retardant-treated wood used in exterior applications or wet or damp locations. Fasteners, including nuts and washers, for fire-retardant-treated wood used in exterior applications or wet or damp locations shall be of hot-dipped, zinc-coated galvanized steel, stainless steel, silicon bronze or copper. Fasteners other than nails and timber rivets shall be permitted to be of mechanically deposited zinc-coated steel with coating weights in accordance with ASTM B 695, Class 55 minimum.

R317.3.4 Fasteners for fire-retardant-treated wood used in interior applications. Fasteners, including nuts and washers, for fire-retardant-treated wood used in interior locations shall be in accordance with the manufacturer's recommendations. In the absence of the manufacturer's recommendations, Section R317.3.3 shall apply.

R317.4 Plastic composites. Plastic composite exterior deck boards, stair treads, guards and handrails containing wood, cellulosic or other biodegradable materials shall comply with the requirements of Section R507.3.

SECTION R318
PROTECTION AGAINST SUBTERRANEAN TERMITES

R318.1 Subterranean termite control methods. In areas subject to damage from termites as indicated by Table R301.2(1), methods of protection shall be one, or a combination, of the following methods:

1. Chemical termiticide treatment in accordance with Section R318.2.
2. Termite baiting system installed and maintained in accordance with the *label*.
3. Pressure-preservative-treated wood in accordance with the provisions of Section R317.1.
4. Naturally durable termite-resistant wood.
5. Physical barriers in accordance with Section R318.3 and used in locations as specified in Section R317.1.
6. Cold-formed steel framing in accordance with Sections R505.2.1 and R603.2.1.

R318.1.1 Quality mark. Lumber and plywood required to be pressure-preservative treated in accordance with Section R318.1 shall bear the quality *mark* of an *approved* inspection agency that maintains continuing supervision, testing and inspection over the quality of the product and that has been *approved* by an accreditation body that complies with the requirements of the American Lumber Standard Committee treated wood program.

R318.1.2 Field treatment. Field-cut ends, notches and drilled holes of pressure-preservative-treated wood shall be retreated in the field in accordance with AWPA M4.

R318.2 Chemical termiticide treatment. Chemical termiticide treatment shall include soil treatment or field-applied wood treatment. The concentration, rate of application and method of treatment of the chemical termiticide shall be in strict accordance with the termiticide *label*.

R318.3 Barriers. *Approved* physical barriers, such as metal or plastic sheeting or collars specifically designed for termite prevention, shall be installed in a manner to prevent termites from entering the structure. Shields placed on top of an exterior foundation wall are permitted to be used only if in combination with another method of protection.

R318.4 Foam plastic protection. In areas where the probability of termite infestation is "very heavy" as indicated in Figure R301.2(6), extruded and expanded polystyrene, polyisocyanurate and other foam plastics shall not be installed on the exterior face or under interior or exterior foundation walls or slab foundations located below *grade*. The clearance between foam plastics installed above *grade* and exposed earth shall be not less than 6 inches (152 mm).

Exceptions:

1. Buildings where the structural members of walls, floors, ceilings and roofs are entirely of noncombustible materials or pressure-preservative-treated wood.
2. Where in *addition* to the requirements of Section R318.1, an *approved* method of protecting the foam plastic and structure from subterranean termite damage is used.
3. On the interior side of *basement walls*.

SECTION R319
SITE ADDRESS

R319.1 Address identification. Buildings shall be provided with *approved* address identification. The address identification shall be legible and placed in a position that is visible from the street or road fronting the property. Address identification characters shall contrast with their background. Address numbers shall be Arabic numbers or alphabetical letters. Numbers shall not be spelled out. Each character shall be not less than 4 inches (102 mm) in height with a stroke width of not less than 0.5 inch (12.7 mm). Where required by the fire code official, address identification shall be provided in additional *approved* locations to facilitate emergency response. Where access is by means of a private road and the building address cannot be viewed from the public way, a monument, pole or other sign or means shall be used to identify the structure. Address identification shall be maintained.

SECTION R320
ACCESSIBILITY

R320.1 Scope. Where there are four or more *dwelling units* or sleeping units in a single structure, the provisions of Chapter 11 of the *International Building Code* for Group R-3 shall apply.

R320.1.1 Guestrooms. A *dwelling* with guestrooms shall comply with the provisions of Chapter 11 of the *International Building Code* for Group R-3. For the purpose of applying the requirements of Chapter 11 of the *International Building Code*, guestrooms shall be considered to be sleeping units.

Exception: Owner-occupied lodging houses with five or fewer guestrooms constructed in accordance with the *International Residential Code* are not required to be accessible.

SECTION R321
ELEVATORS AND PLATFORM LIFTS

R321.1 Elevators. Where provided, passenger elevators, limited-use and limited-application elevators or private residence elevators shall comply with ASME A17.1/CSA B44.

R321.2 Platform lifts. Where provided, platform lifts shall comply with ASME A18.1.

R321.3 Accessibility. Elevators or platform lifts that are part of an accessible route required by Chapter 11 of the *International Building Code*, shall comply with ICC A117.1.

SECTION R322
FLOOD-RESISTANT CONSTRUCTION

R322.1 General. Buildings and structures constructed in whole or in part in flood hazard areas, including A or V Zones and Coastal A Zones, as established in Table R301.2(1), and substantial improvement and restoration of substantial damage of buildings and structures in flood hazard areas, shall be designed and constructed in accordance with the provisions contained in this section. Buildings and structures that are located in more than one flood hazard area shall comply with the provisions associated with the most restrictive flood hazard area. Buildings and structures located in whole or in part in identified floodways shall be designed and constructed in accordance with ASCE 24.

R322.1.1 Alternative provisions. As an alternative to the requirements in Section R322, ASCE 24 is permitted subject to the limitations of this code and the limitations therein.

R322.1.2 Structural systems. Structural systems of buildings and structures shall be designed, connected and anchored to resist flotation, collapse or permanent lateral movement due to structural loads and stresses from flooding equal to the design flood elevation.

R322.1.3 Flood-resistant construction. Buildings and structures erected in areas prone to flooding shall be constructed by methods and practices that minimize flood damage.

R322.1.4 Establishing the design flood elevation. The design flood elevation shall be used to define flood hazard areas. At a minimum, the design flood elevation shall be the higher of the following:

1. The base flood elevation at the depth of peak elevation of flooding, including wave height, that has a 1 percent (100-year flood) or greater chance of being equaled or exceeded in any given year; or
2. The elevation of the design flood associated with the area designated on a flood hazard map adopted by the community, or otherwise legally designated.

R322.1.4.1 Determination of design flood elevations. If design flood elevations are not specified, the *building official* is authorized to require the applicant to comply with either of the following:

1. Obtain and reasonably use data available from a federal, state or other source; or
2. Determine the design flood elevation in accordance with accepted hydrologic and hydraulic engineering practices used to define special flood hazard areas. Determinations shall be undertaken by a registered *design professional* who shall document that the technical methods used reflect currently accepted engineering practice. Studies, analyses and computations shall be submitted in sufficient detail to allow thorough review and approval.

R322.1.4.2 Determination of impacts. In riverine flood hazard areas where design flood elevations are specified but floodways have not been designated, the applicant shall demonstrate that the effect of the proposed buildings and structures on design flood elevations, including fill, when combined with other existing and anticipated flood hazard area encroachments, will not increase the design flood elevation more than 1 foot (305 mm) at any point within the *jurisdiction*.

R322.1.5 Lowest floor. The lowest floor shall be the lowest floor of the lowest enclosed area, including *basement*, and excluding any unfinished flood-resistant enclosure that is useable solely for vehicle parking, building access or limited storage provided that such enclosure is not built so as to render the building or structure in violation of this section.

R322.1.6 Protection of mechanical, plumbing and electrical systems. Electrical systems, *equipment* and components; heating, ventilating, air conditioning; plumbing *appliances* and plumbing fixtures; *duct systems*; and other service *equipment* shall be located at or above the elevation required in Section R322.2 or R322.3. If replaced as part of a substantial improvement, electrical systems, *equipment* and components; heating, ventilating, air conditioning and plumbing *appliances* and plumbing fixtures; *duct systems*; and other service *equipment* shall meet the requirements of this section. Systems, fixtures, and *equipment* and components shall not be mounted on or penetrate through walls intended to break away under flood loads.

Exception: Locating electrical systems, *equipment* and components; heating, ventilating, air conditioning;

plumbing *appliances* and plumbing fixtures; *duct systems*; and other service *equipment* is permitted below the elevation required in Section R322.2 or R322.3 provided that they are designed and installed to prevent water from entering or accumulating within the components and to resist hydrostatic and hydrodynamic loads and stresses, including the effects of buoyancy, during the occurrence of flooding to the design flood elevation in accordance with ASCE 24. Electrical wiring systems are permitted to be located below the required elevation provided that they conform to the provisions of the electrical part of this code for wet locations.

R322.1.7 Protection of water supply and sanitary sewage systems. New and replacement water supply systems shall be designed to minimize or eliminate infiltration of flood waters into the systems in accordance with the plumbing provisions of this code. New and replacement sanitary sewage systems shall be designed to minimize or eliminate infiltration of floodwaters into systems and discharges from systems into floodwaters in accordance with the plumbing provisions of this code and Chapter 3 of the *International Private Sewage Disposal Code.*

R322.1.8 Flood-resistant materials. Building materials and installation methods used for flooring and interior and exterior walls and wall coverings below the elevation required in Section R322.2 or R322.3 shall be flood damage-resistant materials that conform to the provisions of FEMA TB-2.

R322.1.9 Manufactured homes. The bottom of the frame of new and replacement *manufactured homes* on foundations that conform to the requirements of Section R322.2 or R322.3, as applicable, shall be elevated to or above the elevations specified in Section R322.2 (flood hazard areas including A Zones) or R322.3 in coastal high-hazard areas (V Zones and Coastal A Zones). The anchor and tie-down requirements of the applicable state or federal requirements shall apply. The foundation and anchorage of *manufactured homes* to be located in identified floodways shall be designed and constructed in accordance with ASCE 24.

R322.1.10 As-built elevation documentation. A registered *design professional* shall prepare and seal documentation of the elevations specified in Section R322.2 or R322.3.

R322.2 Flood hazard areas (including A Zones). Areas that have been determined to be prone to flooding and that are not subject to high-velocity wave action shall be designated as flood hazard areas. Flood hazard areas that have been delineated as subject to wave heights between $1^1/_2$ feet (457 mm) and 3 feet (914 mm) or otherwise designated by the jurisdiction shall be designated as Coastal A Zones and are subject to the requirements of Section R322.3. Buildings and structures constructed in whole or in part in flood hazard areas shall be designed and constructed in accordance with Sections R322.2.1 through R322.2.3.

R322.2.1 Elevation requirements.

1. Buildings and structures in flood hazard areas, including flood hazard areas designated as Coastal A Zones, shall have the lowest floors elevated to or above the base flood elevation plus 1 foot (305 mm), or the design flood elevation.
2. In areas of shallow flooding (AO Zones), buildings and structures shall have the lowest floor (including *basement*) elevated to a height of not less than the highest adjacent *grade* as the depth number specified in feet (mm) on the FIRM plus 1 foot (305 mm), or not less than 3 feet (15 mm) if a depth number is not specified.
3. Basement floors that are below *grade* on all sides shall be elevated to or above base flood elevation plus 1 foot (305 mm), or the design flood elevation, whichever is higher.

Exception: Enclosed areas below the design flood elevation, including *basements* with floors that are not below *grade* on all sides, shall meet the requirements of Section R322.2.2.

R322.2.2 Enclosed area below design flood elevation. Enclosed areas, including crawl spaces, that are below the design flood elevation shall:

1. Be used solely for parking of vehicles, building access or storage.
2. Be provided with flood openings that meet the following criteria and are installed in accordance with Section R322.2.2.1:
   - 2.1. The total net area of openings shall be not less than 1 square inch (645 mm^2) for each square foot (0.093 m^2) of enclosed area where the enclosed area is measured on the exterior of the enclosure walls, or the openings shall be designed as engineered openings and the *construction documents* shall include a statement by a registered *design professional* that the design of the openings will provide for equalization of hydrostatic flood forces on *exterior walls* by allowing for the automatic entry and exit of floodwaters as specified in Section 2.6.2.2 of ASCE 24.
   - 2.2. Openings shall be not less than 3 inches (76 mm) in any direction in the plane of the wall.

R322.2.2.1 Installation of openings. The walls of enclosed areas shall have openings installed such that:

1. There shall be not less than two openings on different sides of each enclosed area; if a building has more than one enclosed area below the design flood elevation, each area shall have openings on *exterior* walls.
2. The bottom of each opening shall be not more than 1 foot (305 mm) above the higher of the final interior grade or floor and the finished exterior grade immediately under each opening.
3. Openings shall be permitted to be installed in doors and windows; doors and windows without

installed openings do not meet the requirements of this section.

R322.2.3 Foundation design and construction. Foundation walls for buildings and structures erected in flood hazard areas shall meet the requirements of Chapter 4.

Exception: Unless designed in accordance with Section R404:

1. The unsupported height of 6-inch (152 mm) plain masonry walls shall be not more than 3 feet (914 mm).
2. The unsupported height of 8-inch (203 mm) plain masonry walls shall be not more than 4 feet (1219 mm).
3. The unsupported height of 8-inch (203 mm) reinforced masonry walls shall be not more than 8 feet (2438 mm).

For the purpose of this exception, unsupported height is the distance from the finished *grade* of the under-floor space to the top of the wall.

R322.2.4 Tanks. Underground tanks shall be anchored to prevent flotation, collapse and lateral movement under conditions of the base flood. Above-ground tanks shall be installed at or above the elevation required in Section R322.2.1 or shall be anchored to prevent flotation, collapse and lateral movement under conditions of the base flood.

R322.3 Coastal high-hazard areas (including V Zones and Coastal A Zones, where designated). Areas that have been determined to be subject to wave heights in excess of 3 feet (914 mm) or subject to high-velocity wave action or wave-induced erosion shall be designated as coastal high-hazard areas. Flood hazard areas that have been designated as subject to wave heights between $1^1/_2$ feet (457 mm) and 3 feet (914 mm) or otherwise designated by the jurisdiction shall be designated as Coastal A Zones. Buildings and structures constructed in whole or in part in coastal high-hazard areas and coastal A Zones, where designated, shall be designed and constructed in accordance with Sections R322.3.1 through R322.3.7.

R322.3.1 Location and site preparation.

1. New buildings and buildings that are determined to be substantially improved pursuant to Section R105.3.1.1 shall be located landward of the reach of mean high tide.
2. For any alteration of sand dunes and mangrove stands, the *building official* shall require submission of an engineering analysis that demonstrates that the proposed *alteration* will not increase the potential for flood damage.

R322.3.2 Elevation requirements.

1. Buildings and structures erected within coastal high-hazard areas and Coastal A Zones, shall be elevated so that the bottom of the lowest portion of horizontal structural members supporting the lowest floor, with the exception of piling, pile caps, columns, grade beams and bracing, is elevated to or above the base flood elevation plus 1 foot (305 mm) or the design flood elevation, whichever is higher.
2. Basement floors that are below *grade* on all sides are prohibited.
3. The use of fill for structural support is prohibited.
4. Minor grading, and the placement of minor quantities of fill, shall be permitted for landscaping and for drainage purposes under and around buildings and for support of parking slabs, pool decks, patios and walkways.
5. Walls and partitions enclosing areas below the design flood elevation shall meet the requirements of Sections R322.3.4 and R322.3.5.

R322.3.3 Foundations. Buildings and structures erected in coastal high-hazard areas and Coastal A Zones shall be supported on pilings or columns and shall be adequately anchored to such pilings or columns. The space below the elevated building shall be either free of obstruction or, if enclosed with walls, the walls shall meet the requirements of Section R322.3.4. Pilings shall have adequate soil penetrations to resist the combined wave and wind loads (lateral and uplift). Water-loading values used shall be those associated with the design flood. Wind-loading values shall be those required by this code. Pile embedment shall include consideration of decreased resistance capacity caused by scour of soil strata surrounding the piling. Pile systems design and installation shall be certified in accordance with Section R322.3.6. Spread footing, mat, raft or other foundations that support columns shall not be permitted where soil investigations that are required in accordance with Section R401.4 indicate that soil material under the spread footing, mat, raft or other foundation is subject to scour or erosion from wave-velocity flow conditions. If permitted, spread footing, mat, raft or other foundations that support columns shall be designed in accordance with ASCE 24. Slabs, pools, pool decks and walkways shall be located and constructed to be structurally independent of buildings and structures and their foundations to prevent transfer of flood loads to the buildings and structures during conditions of flooding, scour or erosion from wave-velocity flow conditions, unless the buildings and structures and their foundations are designed to resist the additional flood load.

Exception: In Coastal A Zones, stem wall foundations supporting a floor system above and backfilled with soil or gravel to the underside of the floor system shall be permitted provided the foundations are designed to account for wave action, debris impact, erosion and local scour. Where soils are susceptible to erosion and local scour, stem wall foundations shall have deep footings to account for the loss of soil.

R322.3.4 Walls below design flood elevation. Walls and partitions are permitted below the elevated floor, provided that such walls and partitions are not part of the structural support of the building or structure and:

1. Electrical, mechanical and plumbing system components are not to be mounted on or penetrate through

walls that are designed to break away under flood loads; and

2. Are constructed with insect screening or open lattice; or
3. Are designed to break away or collapse without causing collapse, displacement or other structural damage to the elevated portion of the building or supporting foundation system. Such walls, framing and connections shall have a resistance of not less than 10 (479 Pa) and not more than 20 pounds per square foot (958 Pa) as determined using allowable stress design; or
4. Where wind loading values of this code exceed 20 pounds per square foot (958 Pa), the *construction documents* shall include documentation prepared and sealed by a registered *design professional* that:
   4.1. The walls and partitions below the design flood elevation have been designed to collapse from a water load less than that which would occur during the base flood.
   4.2. The elevated portion of the building and supporting foundation system have been designed to withstand the effects of wind and flood loads acting simultaneously on structural and nonstructural building components. Water-loading values used shall be those associated with the design flood. Wind-loading values shall be those required by this code.
5. Walls intended to break away under flood loads as specified in Item 3 or 4 have flood openings that meet the criteria in Section R322.2.2, Item 2.
6. In Coastal A Zones, walls shall be provided with flood openings that meet the criteria of Section R322.2.2.

R322.3.5 Enclosed areas below design flood elevation. Enclosed areas below the design flood elevation shall be used solely for parking of vehicles, building access or storage.

R322.3.5.1 Protection of building envelope. An exterior door that meets the requirements of Section R609 shall be installed at the top of stairs that provide access to the building and that are enclosed with walls designed to break away in accordance with Section R322.3.4.

R322.3.6 Construction documents. The *construction documents* shall include documentation that is prepared and sealed by a registered *design professional* that the design and methods of construction to be used meet the applicable criteria of this section.

R322.3.7 Tanks. Underground tanks shall be anchored to prevent flotation, collapse and lateral movement under conditions of the base flood. Above-ground tanks shall be installed at or above the elevation required in Section R322.3.2. Where elevated on platforms, the platforms shall be cantilevered from or knee braced to the building or shall be supported on foundations that conform to the requirements of Section R322.3.

SECTION R323
STORM SHELTERS

R323.1 General. This section applies to storm shelters where constructed as separate detached buildings or where constructed as safe rooms within buildings for the purpose of providing refuge from storms that produce high winds, such as tornados and hurricanes. In addition to other applicable requirements in this code, storm shelters shall be constructed in accordance with ICC/NSSA-500.

SECTION 324
SOLAR ENERGY SYSTEMS

R324.1 General. Solar energy systems shall comply with the provisions of this section.

R324.2 Solar thermal systems. Solar thermal systems shall be designed and installed in accordance with Chapter 23 and the *International Fire Code*.

R324.3 Photovoltaic systems. Photovoltaic systems shall be designed and installed in accordance with Sections R324.3.1 through R324.7.2.5 and NFPA 70. Inverters shall be *listed* and *labeled* in accordance with UL 1741. Systems connected to the utility grid shall use inverters listed for utility interaction.

R324.3.1 Equipment listings. Photovoltaic panels and modules shall be listed and labeled in accordance with UL 1703.

R324.4 Rooftop-mounted photovoltaic systems. Rooftop-mounted photovoltaic panel systems installed on or above the roof covering shall be designed and installed in accordance with Section R907.

R324.4.1 Roof live load. Roof structures that provide support for photovoltaic panel systems shall be designed for applicable roof live load. The design of roof structures need not include roof live load in the areas covered by photovoltaic panel systems. Portions of roof structures not covered by photovoltaic panels shall be designed for roof live load. Roof structures that provide support for photovoltaic panel systems shall be designed for live load, L_R, for the load case where the photovoltaic panel system is not present.

R324.5 Building-integrated photovoltaic systems. Building-integrated photovoltaic systems that serve as roof coverings shall be designed and installed in accordance with Section R905.

R324.5.1 Photovoltaic shingles. Photovoltaic shingles shall comply with Section R905.16.

R324.6 Ground-mounted photovoltaic systems. Ground-mounted photovoltaic systems shall be designed and installed in accordance with Section R301.

R324.6.1 Fire separation distances. Ground-mounted photovoltaic systems shall be subject to the *fire separation distance* requirements determined by the local *jurisdiction*.

R324.7 Access and pathways. Roof access, pathways and spacing requirements shall be provided in accordance with Sections R324.7.1 through R324.7.2.5.

Exceptions:

1. Detached garages and accessory structures to one- and two-family *dwellings* and *townhouses,* such as parking shade structures, carports, solar trellises and similar structures.
2. Roof access, pathways and spacing requirements need not be provided where an alternative ventilation method *approved* by the code official has been provided or where the code official has determined that vertical ventilation techniques will not be employed.

R324.7.1 Roof access points. Roof access points shall be located in areas that do not require the placement of ground ladders over openings such as windows or doors, and located at strong points of building construction in locations where the access point does not conflict with overhead obstructions such as tree limbs, wires or signs.

R324.7.2 Solar photovoltaic systems. Solar photovoltaic systems shall comply with Sections R324.7.2.1 through R324.7.2.5.

R324.7.2.1 Size of solar photovoltaic array. Each photovoltaic array shall be limited to 150 feet by 150 feet (45 720 by 45 720 mm). Multiple arrays shall be separated by a clear access pathway not less than 3 feet (914 mm) in width.

R324.7.2.2 Hip roof layouts. Panels and modules installed on *dwellings* with hip roof layouts shall be located in a manner that provides a clear access pathway not less than 3 feet (914 mm) in width from the eave to the ridge on each roof slope where panels and modules are located. The access pathway shall be located at a structurally strong location on the building capable of supporting the live load of fire fighters accessing the roof.

Exception: These requirements shall not apply to roofs with slopes of 2 units vertical in 12 units horizontal (16.6 percent) and less.

R324.7.2.3 Single ridge roofs. Panels and modules installed on *dwellings* with a single ridge shall be located in a manner that provides two, 3-foot-wide (914 mm) access pathways from the eave to the ridge on each roof slope where panels or modules are located.

Exception: This requirement shall not apply to roofs with slopes of 2 units vertical in 12 units horizontal (16.6 percent) and less.

R324.7.2.4 Roofs with hips and valleys. Panels and modules installed on *dwellings* with roof hips or valleys shall not be located less than 18 inches (457 mm) from a hip or valley where panels or modules are to be placed on both sides of a hip or valley. Where panels are to be located on one side only of a hip or valley that is of equal length, the 18-inch (457 mm) clearance does not apply.

Exception: These requirements shall not apply to roofs with slopes of 2 units vertical in 12 units horizontal (16.6 percent) and less.

R324.7.2.5 Allowance for smoke ventilation operations. Panels and modules installed on dwellings shall not be located less than 3 feet (914 mm) below the roof ridge to allow for fire department smoke ventilation operations.

Exception: Where an alternative ventilation method approved by the code official has been provided or where the code official has determined that vertical ventilation techniques will not be employed, clearance from the roof ridge is not required.

SECTION R325
MEZZANINES

R325.1 General. Mezzanines shall comply with Section R325.

R325.2 Mezzanines. The clear height above and below mezzanine floor construction shall be not less than 7 feet (2134 mm).

R325.3 Area limitation. The aggregate area of a mezzanine or mezzanines shall be not greater than one-third of the floor area of the room or space in which they are located. The enclosed portion of a room shall not be included in a determination of the floor area of the room in which the *mezzanine* is located.

R325.4 Means of egress. The means of egress for mezzanines shall comply with the applicable provisions of Section R311.

R325.5 Openness. Mezzanines shall be open and unobstructed to the room in which they are located except for walls not more than 42 inches (1067 mm) in height, columns and posts.

Exceptions:

1. Mezzanines or portions thereof are not required to be open to the room in which they are located, provided that the aggregate floor area of the enclosed space is not greater than 10 percent of the mezzanine area.
2. In buildings that are not more than two stories above *grade plane* and equipped throughout with an automatic sprinkler system in accordance with NFPA 13R or NFPA 13D, a mezzanine having two or more means of egress shall not be required to be open to the room in which the mezzanine is located.

SECTION R326
SWIMMING POOLS, SPAS AND HOT TUBS

R326.1 General. The design and construction of pools and spas shall comply with the *International Swimming Pool and Spa Code.*

CHAPTER 4

FOUNDATIONS

SECTION R401
GENERAL

R401.1 Application. The provisions of this chapter shall control the design and construction of the foundation and foundation spaces for buildings. In addition to the provisions of this chapter, the design and construction of foundations in flood hazard areas as established by Table R301.2(1) shall meet the provisions of Section R322. Wood foundations shall be designed and installed in accordance with AWC PWF.

Exception: The provisions of this chapter shall be permitted to be used for wood foundations only in the following situations:

1. In buildings that have no more than two floors and a roof.
2. Where interior *basement* and foundation walls are constructed at intervals not exceeding 50 feet (15 240 mm).

Wood foundations in Seismic Design Category D_0, D_1 or D_2 shall be designed in accordance with accepted engineering practice.

R401.2 Requirements. Foundation construction shall be capable of accommodating all loads in accordance with Section R301 and of transmitting the resulting loads to the supporting soil. Fill soils that support footings and foundations shall be designed, installed and tested in accordance with accepted engineering practice. Gravel fill used as footings for wood and precast concrete foundations shall comply with Section R403.

R401.3 Drainage. Surface drainage shall be diverted to a storm sewer conveyance or other *approved* point of collection that does not create a hazard. *Lots* shall be graded to drain surface water away from foundation walls. The *grade* shall fall a minimum of 6 inches (152 mm) within the first 10 feet (3048 mm).

Exception: Where *lot lines*, walls, slopes or other physical barriers prohibit 6 inches (152 mm) of fall within 10 feet (3048 mm), drains or swales shall be constructed to ensure drainage away from the structure. Impervious surfaces within 10 feet (3048 mm) of the building foundation shall be sloped a minimum of 2 percent away from the building.

R401.4 Soil tests. Where quantifiable data created by accepted soil science methodologies indicate expansive, compressible, shifting or other questionable soil characteristics are likely to be present, the *building official* shall determine whether to require a soil test to determine the soil's characteristics at a particular location. This test shall be done by an *approved agency* using an *approved* method.

R401.4.1 Geotechnical evaluation. In lieu of a complete geotechnical evaluation, the load-bearing values in Table R401.4.1 shall be assumed.

TABLE R401.4.1
PRESUMPTIVE LOAD-BEARING VALUES OF FOUNDATION MATERIALS[a]

CLASS OF MATERIAL	LOAD-BEARING PRESSURE (pounds per square foot)
Crystalline bedrock	12,000
Sedimentary and foliated rock	4,000
Sandy gravel and/or gravel (GW and GP)	3,000
Sand, silty sand, clayey sand, silty gravel and clayey gravel (SW, SP, SM, SC, GM and GC)	2,000
Clay, sandy, silty clay, clayey silt, silt and sandy siltclay (CL, ML, MH and CH)	1,500[b]

For SI: 1 pound per square foot = 0.0479 kPa.

a. Where soil tests are required by Section R401.4, the allowable bearing capacities of the soil shall be part of the recommendations.

b. Where the building official determines that in-place soils with an allowable bearing capacity of less than 1,500 psf are likely to be present at the site, the allowable bearing capacity shall be determined by a soils investigation.

R401.4.2 Compressible or shifting soil. Instead of a complete geotechnical evaluation, where top or subsoils are compressible or shifting, they shall be removed to a depth and width sufficient to ensure stable moisture content in each active zone and shall not be used as fill or stabilized within each active zone by chemical, dewatering or presaturation.

SECTION R402
MATERIALS

R402.1 Wood foundations. Wood foundation systems shall be designed and installed in accordance with the provisions of this code.

R402.1.1 Fasteners. Fasteners used below *grade* to attach plywood to the exterior side of exterior *basement* or crawl-space wall studs, or fasteners used in knee wall construction, shall be of Type 304 or 316 stainless steel. Fasteners used above *grade* to attach plywood and all lumber-to-lumber fasteners except those used in knee wall construction shall be of Type 304 or 316 stainless steel, silicon bronze, copper, hot-dipped galvanized (zinc coated) steel nails, or hot-tumbled galvanized (zinc coated) steel nails. Electro-galvanized steel nails and galvanized (zinc coated) steel staples shall not be permitted.

R402.1.2 Wood treatment. All lumber and plywood shall be pressure-preservative treated and dried after treatment in accordance with AWPA U1 (Commodity Specification A, Use Category 4B and Section 5.2), and shall bear the *label* of an accredited agency. Where lumber and/or plywood is cut or drilled after treatment, the treated surface shall be field treated with copper naphthenate, the concentration of which shall contain a minimum of 2-percent

copper metal, by repeated brushing, dipping or soaking until the wood absorbs no more preservative.

R402.2 Concrete. Concrete shall have a minimum specified compressive strength of f'_c, as shown in Table R402.2. Concrete subject to moderate or severe weathering as indicated in Table R301.2(1) shall be air entrained as specified in Table R402.2. The maximum weight of fly ash, other pozzolans, silica fume, slag or blended cements that is included in concrete mixtures for garage floor slabs and for exterior porches, carport slabs and steps that will be exposed to deicing chemicals shall not exceed the percentages of the total weight of cementitious materials specified in Section 19.3.3.4 of ACI 318. Materials used to produce concrete and testing thereof shall comply with the applicable standards listed in Chapters 19 and 20 of ACI 318 or ACI 332.

R402.2.1 Materials for concrete. Materials for concrete shall comply with the requirements of Section R608.5.1.

R402.3 Precast concrete. Precast concrete foundations shall be designed in accordance with Section R404.5 and shall be installed in accordance with the provisions of this code and the manufacturer's instructions.

R402.3.1 Precast concrete foundation materials. Materials used to produce precast concrete foundations shall meet the following requirements.

1. All concrete used in the manufacture of precast concrete foundations shall have a minimum compressive strength of 5,000 psi (34 470 kPa) at 28 days. Concrete exposed to a freezing and thawing environment shall be air entrained with a minimum total air content of 5 percent.
2. Structural reinforcing steel shall meet the requirements of ASTM A 615, A 706 or A 996. The minimum yield strength of reinforcing steel shall be 40,000 psi (Grade 40) (276 MPa). Steel reinforcement for precast concrete foundation walls shall have a minimum concrete cover of $^3/_4$ inch (19.1 mm).
3. Panel-to-panel connections shall be made with Grade II steel fasteners.
4. The use of nonstructural fibers shall conform to ASTM C 1116.
5. Grout used for bedding precast foundations placed upon concrete footings shall meet ASTM C 1107.

R402.4 Masonry. Masonry systems shall be designed and installed in accordance with this chapter and shall have a minimum specified compressive strength of 1,500 psi (10.3 MPa).

SECTION R403
FOOTINGS

R403.1 General. All exterior walls shall be supported on continuous solid or fully grouted masonry or concrete footings, crushed stone footings, wood foundations, or other *approved* structural systems which shall be of sufficient design to accommodate all loads according to Section R301 and to transmit the resulting loads to the soil within the limitations as determined from the character of the soil. Footings shall be supported on undisturbed natural soils or engineered fill. Concrete footing shall be designed and constructed in accordance with the provisions of Section R403 or in accordance with ACI 332.

R403.1.1 Minimum size. The minimum width, W, and thickness, T, for concrete footings shall be in accordance with Tables R403.1(1) through R403.1(3) and Figure R403.1(1) or R403.1.3, as applicable. The footing width shall be based on the load-bearing value of the soil in accordance with Table R401.4.1. Footing projections, P, shall be not less than 2 inches (51 mm) and shall not exceed the thickness of the footing. Footing thickness and projection for fireplaces shall be in accordance with Section R1001.2. The size of footings supporting piers and columns shall be based on the tributary load and allowable soil pressure in accordance with Table R401.4.1. Footings for wood foundations shall be in accordance with the details set forth in Section R403.2, and Figures R403.1(2) and R403.1(3).

TABLE R402.2
MINIMUM SPECIFIED COMPRESSIVE STRENGTH OF CONCRETE

TYPE OR LOCATION OF CONCRETE CONSTRUCTION	MINIMUM SPECIFIED COMPRESSIVE STRENGTH[a] (f'_c)		
	Weathering Potential[b]		
	Negligible	Moderate	Severe
Basement walls, foundations and other concrete not exposed to the weather	2,500	2,500	2,500[c]
Basement slabs and interior slabs on grade, except garage floor slabs	2,500	2,500	2,500[c]
Basement walls, foundation walls, exterior walls and other vertical concrete work exposed to the weather	2,500	3,000[d]	3,000[d]
Porches, carport slabs and steps exposed to the weather, and garage floor slabs	2,500	3,000[d, e, f]	3,500[d, e, f]

For SI: 1 pound per square inch = 6.895 kPa.

a. Strength at 28 days psi.

b. See Table R301.2(1) for weathering potential.

c. Concrete in these locations that is subject to freezing and thawing during construction shall be air-entrained concrete in accordance with Footnote d.

d. Concrete shall be air-entrained. Total air content (percent by volume of concrete) shall be not less than 5 percent or more than 7 percent.

e. See Section R402.2 for maximum cementitious materials content.

f. For garage floors with a steel-troweled finish, reduction of the total air content (percent by volume of concrete) to not less than 3 percent is permitted if the specified compressive strength of the concrete is increased to not less than 4,000 psi.

TABLE R403.1(1)
MINIMUM WIDTH AND THICKNESS FOR CONCRETE FOOTINGS FOR LIGHT-FRAME CONSTRUCTION (inches)[a, b]

SNOW LOAD OR ROOF LIVE LOAD	STORY AND TYPE OF STRUCTURE WITH LIGHT FRAME	LOAD-BEARING VALUE OF SOIL (psf)					
		1500	2000	2500	3000	3500	4000
20 psf	1 story—slab-on-grade	12 × 6	12 × 6	12 × 6	12 × 6	12 × 6	12 × 6
	1 story—with crawl space	12 × 6	12 × 6	12 × 6	12 × 6	12 × 6	12 × 6
	1 story—plus basement	18 × 6	14 × 6	12 × 6	12 × 6	12 × 6	12 × 6
	2 story—slab-on-grade	12 × 6	12 × 6	12 × 6	12 × 6	12 × 6	12 × 6
	2 story—with crawl space	16 × 6	12 × 6	12 × 6	12 × 6	12 × 6	12 × 6
	2 story—plus basement	22 × 6	16 × 6	13 × 6	12 × 6	12 × 6	12 × 6
	3 story—slab-on-grade	14 × 6	12 × 6	12 × 6	12 × 6	12 × 6	12 × 6
	3 story—with crawl space	19 × 6	14 × 6	12 × 6	12 × 6	12 × 6	12 × 6
	3 story—plus basement	25 × 8	19 × 6	15 × 6	13 × 6	12 × 6	12 × 6
30 psf	1 story—slab-on-grade	12 × 6	12 × 6	12 × 6	12 × 6	12 × 6	12 × 6
	1 story—with crawl space	13 × 6	12 × 6	12 × 6	12 × 6	12 × 6	12 × 6
	1 story—plus basement	19 × 6	14 × 6	12 × 6	12 × 6	12 × 6	12 × 6
	2 story—slab-on-grade	12 × 6	12 × 6	12 × 6	12 × 6	12 × 6	12 × 6
	2 story—with crawl space	17 × 6	13 × 6	12 × 6	12 × 6	12 × 6	12 × 6
	2 story—plus basement	23 × 6	17 × 6	14 × 6	12 × 6	12 × 6	12 × 6
	3 story—slab-on-grade	15 × 6	12 × 6	12 × 6	12 × 6	12 × 6	12 × 6
	3 story—with crawl space	20 × 6	15 × 6	12 × 6	12 × 6	12 × 6	12 × 6
	3 story—plus basement	26 × 8	20 × 6	16 × 6	13 × 6	12 × 6	12 × 6
50 psf	1 story—slab-on-grade	12 × 6	12 × 6	12 × 6	12 × 6	12 × 6	12 × 6
	1 story—with crawl space	16 × 6	12 × 6	12 × 6	12 × 6	12 × 6	12 × 6
	1 story—plus basement	21 × 6	16 × 6	13 × 6	12 × 6	12 × 6	12 × 6
	2 story—slab-on-grade	14 × 6	12 × 6	12 × 6	12 × 6	12 × 6	12 × 6
	2 story—with crawl space	19 × 6	14 × 6	12 × 6	12 × 6	12 × 6	12 × 6
	2 story—plus basement	25 × 7	19 × 6	15 × 6	12 × 6	12 × 6	12 × 6
	3 story—slab-on-grade	17 × 6	13 × 6	12 × 6	12 × 6	12 × 6	12 × 6
	3 story—with crawl space	22 × 6	17 × 6	13 × 6	12 × 6	12 × 6	12 × 6
	3 story—plus basement	28 × 9	21 × 6	17 × 6	14 × 6	12 × 6	12 × 6
70 psf	1 story—slab-on-grade	12 × 6	12 × 6	12 × 6	12 × 6	12 × 6	12 × 6
	1 story—with crawl space	18 × 6	13 × 6	12 × 6	12 × 6	12 × 6	12 × 6
	1 story—plus basement	24 × 7	18 × 6	14 × 6	12 × 6	12 × 6	12 × 6
	2 story—slab-on-grade	16 × 6	12 × 6	12 × 6	12 × 6	12 × 6	12 × 6
	2 story—with crawl space	21 × 6	16 × 6	13 × 6	12 × 6	12 × 6	12 × 6
	2 story—plus basement	27 × 9	20 × 6	16 × 6	14 × 6	12 × 6	12 × 6
	3 story—slab-on-grade	19 × 6	14 × 6	12 × 6	12 × 6	12 × 6	12 × 6
	3 story—with crawl space	25 × 7	18 × 6	15 × 6	12 × 6	12 × 6	12 × 6
	3 story—plus basement	30 × 10	23 × 6	18 × 6	15 × 6	13 × 6	12 × 6

For SI: 1 inch = 25.4 mm, 1 plf = 14.6 N/m, 1 pound per square foot = 47.9 N/m^2.

a. Interpolation allowed. Extrapolation is not allowed.

b. Based on 32-foot-wide house with load-bearing center wall that carries half of the tributary attic, and floor framing. For every 2 feet of adjustment to the width of the house, add or subtract 2 inches of footing width and 1 inch of footing thickness (but not less than 6 inches thick).

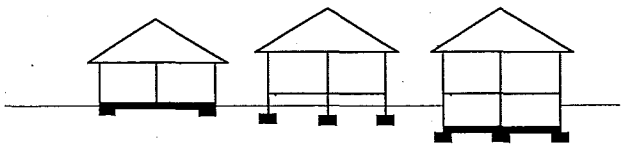

2547

TABLE R403.1(2)
MINIMUM WIDTH AND THICKNESS FOR CONCRETE FOOTINGS FOR LIGHT-FRAME CONSTRUCTION WITH BRICK VENEER (inches)[a, b]

SNOW LOAD OR ROOF LIVE LOAD	STORY AND TYPE OF STRUCTURE WITH BRICK VENEER	LOAD-BEARING VALUE OF SOIL (psf)					
		1500	2000	2500	3000	3500	4000
20 psf	1 story—slab-on-grade	12 × 6	12 × 6	12 × 6	12 × 6	12 × 6	12 × 6
	1 story—with crawl space	15 × 6	12 × 6	12 × 6	12 × 6	12 × 6	12 × 6
	1 story—plus basement	21 × 6	15 × 6	12 × 6	12 × 6	12 × 6	12 × 6
	2 story—slab-on-grade	15 × 6	12 × 6	12 × 6	12 × 6	12 × 6	12 × 6
	2 story—with crawl space	20 × 6	15 × 6	12 × 6	12 × 6	12 × 6	12 × 6
	2 story—plus basement	26 × 8	20 × 6	16 × 6	13 × 6	12 × 6	12 × 6
	3 story—slab-on-grade	20 × 6	15 × 6	12 × 6	12 × 6	12 × 6	12 × 6
	3 story—with crawl space	26 × 8	19 × 6	15 × 6	13 × 6	12 × 6	12 × 6
	3 story—plus basement	32 × 11	24 × 7	19 × 6	16 × 6	14 × 6	12 × 6
30 psf	1 story—slab-on-grade	12 × 6	12 × 6	12 × 6	12 × 6	12 × 6	12 × 6
	1 story—with crawl space	16 × 6	12 × 6	12 × 6	12 × 6	12 × 6	12 × 6
	1 story—plus basement	22 × 6	16 × 6	13 × 6	12 × 6	12 × 6	12 × 6
	2 story—slab-on-grade	16 × 6	12 × 6	12 × 6	12 × 6	12 × 6	12 × 6
	2 story—with crawl space	22 × 6	16 × 6	13 × 6	12 × 6	12 × 6	12 × 6
	2 story—plus basement	27 × 9	21 × 6	16 × 6	14 × 6	12 × 6	12 × 6
	3 story—slab-on-grade	21 × 6	16 × 6	13 × 6	12 × 6	12 × 6	12 × 6
	3 story—with crawl space	27 × 8	20 × 6	16 × 6	13 × 6	12 × 6	12 × 6
	3 story—plus basement	33 × 11	24 × 7	20 × 6	16 × 6	14 × 6	12 × 6
50 psf	1 story—slab-on-grade	13 × 6	12 × 6	12 × 6	12 × 6	12 × 6	12 × 6
	1 story—with crawl space	18 × 6	14 × 6	12 × 6	12 × 6	12 × 6	12 × 6
	1 story—plus basement	24 × 7	18 × 6	14 × 6	12 × 6	12 × 6	12 × 6
	2 story—slab-on-grade	18 × 6	14 × 6	12 × 6	12 × 6	12 × 6	12 × 6
	2 story—with crawl space	24 × 7	18 × 6	14 × 6	12 × 6	12 × 6	12 × 6
	2 story—plus basement	29 × 10	22 × 6	18 × 6	15 × 6	13 × 6	12 × 6
	3 story—slab-on-grade	27 × 7	18 × 6	13 × 6	12 × 6	12 × 6	12 × 6
	3 story—with crawl space	29 × 9	22 × 6	17 × 6	14 × 6	12 × 6	12 × 6
	3 story—plus basement	35 × 12	26 × 8	21 × 6	17 × 6	15 × 6	13 × 6
70 psf	1 story—slab-on-grade	15 × 6	12 × 6	12 × 6	12 × 6	12 × 6	12 × 6
	1 story—with crawl space	20 × 6	15 × 6	12 × 6	12 × 6	12 × 6	12 × 6
	1 story—plus basement	26 × 8	20 × 6	16× 6	13 × 6	12 × 6	12 × 6
	2 story—slab-on grade	20 × 6	15 × 6	12 × 6	12 × 6	12 × 6	12 × 6
	2 story—with crawl space	26 × 8	19 × 6	15× 6	13 × 6	12 × 6	12 × 6
	2 story—plus basement	32 × 11	24 × 7	19 × 6	16 × 6	14 × 6	12 × 6
	3 story—slab-on-grade	26 × 8	19 × 6	15 × 6	13 × 6	12 × 6	12 × 6
	3 story—with crawl space	31 × 11	23 × 7	19 × 6	16 × 6	13 × 6	12 × 6
	3 story—plus basement	37 × 13	28 × 9	22 × 6	18 × 6	16 × 6	14 × 6

For SI: 1 inch = 25.4 mm, 1 plf = 14.6 N/m, 1 pound per square foot = 47.9 N/m^2.

a. Interpolation allowed. Extrapolation is not allowed.

b. Based on 32-foot-wide house with load-bearing center wall that carries half of the tributary attic, and floor framing. For every 2 feet of adjustment to the width of the house, add or subtract 2 inches of footing width and 1 inch of footing thickness (but not less than 6 inches thick).

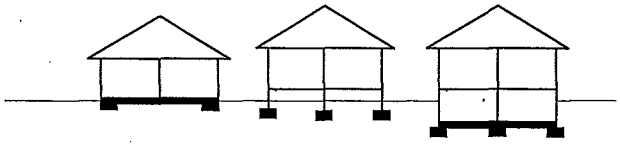

SLAB ON GRADE | CRAWL SPACE | BASEMENT

2548

TABLE R403.1(3)
MINIMUM WIDTH AND THICKNESS FOR CONCRETE FOOTINGS WITH CAST-IN-PLACE CONCRETE OR FULLY GROUTED MASONRY WALL CONSTRUCTION (inches)[a, b]

SNOW LOAD OR ROOF LIVE LOAD	STORY AND TYPE OF STRUCTURE WITH CMU	LOAD-BEARING VALUE OF SOIL (psf)					
		1500	2000	2500	3000	3500	4000
20 psf	1 story—slab-on-grade	14 × 6	12 × 6	12 × 6	12 × 6	12 × 6	12 × 6
	1 story—with crawl space	19 × 6	14 × 6	12 × 6	12 × 6	12 × 6	12 × 6
	1 story—plus basement	25 × 8	19 × 6	15 × 6	13 × 6	12 × 6	12 × 6
	2 story—slab-on-grade	23 × 7	18 × 6	14 × 6	12 × 6	12 × 6	12 × 6
	2 story—with crawl space	29 × 9	22 × 6	17 × 6	14 × 6	12 × 6	12 × 6
	2 story—plus basement	35 × 12	26 × 8	21 × 6	17 × 6	15 × 6	13 × 6
	3 story—slab-on-grade	32× 11	24 × 7	19 × 6	16 × 6	14 × 6	12 × 6
	3 story—with crawl space	38 × 14	28 × 9	23 × 6	19 × 6	16 × 6	14 × 6
	3 story—plus basement	43 × 17	33 × 11	26 × 8	22 × 6	19 × 6	16 × 6
30 psf	1 story—slab-on-grade	15 × 6	12 × 6	12 × 6	12 × 6	12 × 6	12 × 6
	1 story—with crawl space	20 × 6	15 × 6	12 × 6	12 × 6	12 × 6	12 × 6
	1 story—plus basement	26 × 8	20 × 6	16 × 6	13 × 6	12 × 6	12 × 6
	2 story—slab-on-grade	24 × 7	18 × 6	15 × 6	12 × 6	12 × 6	12 × 6
	2 story—with crawl space	30 × 10	22 × 6	18 × 6	15 × 6	13 × 6	12 × 6
	2 story—plus basement	36 × 13	27 × 8	21 × 6	18 × 6	15 × 6	13 × 6
	3 story—slab-on-grade	33 × 12	25 × 7	20 × 6	17 × 6	14 × 6	12 × 6
	3 story—with crawl space	39 × 14	29 × 9	23 × 7	19 × 6	17 × 6	14 × 6
	3 story—plus basement	44 × 17	33 × 12	27× 8	22 × 6	19 × 6	17 × 6
50 psf	1 story—slab-on-grade	17 × 6	13 × 6	12 × 6	12 × 6	12 × 6	12 × 6
	1 story—with crawl space	22 × 6	17 × 6	13 × 6	12 × 6	12 × 6	12 × 6
	1 story—plus basement	28× 9	21 × 6	17 × 6	14 × 6	12 × 6	12 × 6
	2 story—slab-on-grade	27 × 8	20 × 6	16 × 6	13 × 6	12 × 6	12 × 6
	2 story—with crawl space	32 × 11	24 × 7	19 × 6	16 × 6	14 × 6	12 × 6
	2 story—plus basement	38 × 14	28 × 9	23 × 6	19 × 6	16 × 6	14 × 6
	3 story—slab-on-grade	35 × 13	27 × 8	21 × 6	18 × 6	15 × 6	13 × 6
	3 story—with crawl space	41 × 15	31 × 10	24 × 7	20 × 6	17 × 6	15 × 6
	3 story—plus basement	47 × 18	35 × 12	28 × 9	23 × 7	20 × 6	17 × 6
70 psf	1 story—slab-on-grade	19 × 6	14 × 6	12 × 6	12 × 6	12 × 6	12 × 6
	1 story—with crawl space	25 × 7	18 × 6	15 × 6	12 × 6	12 × 6	12 × 6
	1 story—plus basement	30 × 10	23 × 6	18 × 6	15 × 6	13 × 6	12 × 6
	2 story—slab-on-grade	29 × 9	22 × 6	17 × 6	14 × 6	12 × 6	12 × 6
	2 story—with crawl space	34 × 12	26 × 8	21 × 6	17 × 6	15 × 6	13 × 6
	2 story—plus basement	40 × 15	30 × 10	24 × 7	20 × 6	17 × 6	15 × 6
	3 story—slab-on-grade	38 × 14	28 × 9	23 × 6	19 × 6	16 × 6	14 × 6
	3 story—with crawl space	43 × 16	32 × 11	26 × 8	21 × 6	18 × 6	16 × 6
	3 story—plus basement	49 × 19	37 × 13	29 × 10	24 × 7	21 × 6	18 × 6

For SI: 1 inch = 25.4 mm, 1 plf = 14.6 N/m, 1 pound per square foot = 47.9 N/m^2.

a. Interpolation allowed. Extrapolation is not allowed.

b. Based on 32-foot-wide house with load-bearing center wall that carries half of the tributary attic, and floor framing. For every 2 feet of adjustment to the width of the house add or subtract 2 inches of footing width and 1 inch of footing thickness (but not less than 6 inches thick).

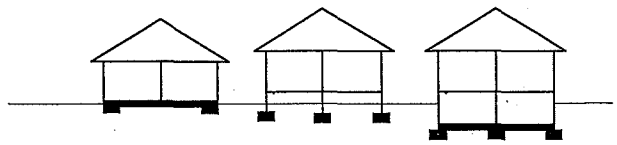

R403.1.2 Continuous footing in Seismic Design Categories D_0, D_1 and D_2. Exterior walls of buildings located in Seismic Design Categories D_0, D_1 and D_2 shall be supported by continuous solid or fully grouted masonry or concrete footings. Other footing materials or systems shall be designed in accordance with accepted engineering practice. All required interior *braced wall panels* in buildings located in Seismic Design Categories D_0, D_1 and D_2 with plan dimensions greater than 50 feet (15 240 mm) shall be supported by continuous solid or fully grouted masonry or concrete footings in accordance with Section R403.1.3.4, except for two-story buildings in Seismic Design Category D_2, in which all *braced wall panels*, interior and exterior, shall be supported on continuous foundations.

Exception: Two-story buildings shall be permitted to have interior *braced wall panels* supported on continuous foundations at intervals not exceeding 50 feet (15 240 mm) provided that:

1. The height of cripple walls does not exceed 4 feet (1219 mm).
2. First-floor braced wall panels are supported on doubled floor joists, continuous blocking or floor beams.
3. The distance between bracing lines does not exceed twice the building width measured parallel to the braced wall line.

R403.1.3 Footing and stem wall reinforcing in Seismic Design Categories D_0, D_1, and D_2. Concrete footings located in Seismic Design Categories D_0, D_1 and D_2, as established in Table R301.2(1), shall have minimum reinforcement in accordance with this section and Figure R403.1.3. Reinforcement shall be installed with support and cover in accordance with Section R403.1.3.5.

R403.1.3.1 Concrete stem walls with concrete footings. In Seismic Design Categories D_0, D_1 and D_2 where a construction joint is created between a concrete footing and a concrete stem wall, a minimum of one No. 4 vertical bar shall be installed at not more than 4 feet (1219 mm) on center. The vertical bar shall have a standard hook and extend to the bottom of the footing and shall have support and cover as specified in Section R403.1.3.5.3 and extend a minimum of 14 inches (357 mm) into the stem wall. Standard hooks shall comply with Section R608.5.4.5. A minimum of one No. 4 horizontal bar shall be installed within 12 inches (305 mm) of the top of the stem wall and one No. 4 horizontal bar shall be located 3 to 4 inches (76 mm to 102 mm) from the bottom of the footing.

R403.1.3.2 Masonry stem walls with concrete footings. In Seismic Design Categories D_0, D_1 and D_2 where a masonry stem wall is supported on a concrete footing, a minimum of one No. 4 vertical bar shall be installed at not more than 4 feet (1219 mm) on center. The vertical bar shall have a standard hook and extend to the bottom of the footing and shall have support and cover as specified in Section R403.1.3.5.3 and extend a minimum of 14 inches (357 mm) into the stem wall. Standard hooks shall comply with Section R608.5.4.5. A minimum of one No. 4 horizontal bar shall be installed within 12 inches (305 mm) of the top of the wall and one No. 4 horizontal bar shall be located 3 to 4 inches (76 mm to 102 mm) from the bottom of the footing. Masonry stem walls shall be solid grouted.

R403.1.3.3 Slabs-on-ground with turned-down footings. In Seismic Design Categories D_0, D_1 and D_2, slabs on ground cast monolithically with turned-down footings shall have a minimum of one No. 4 bar at the top and the bottom of the footing or one No. 5 bar or two No. 4 bars in the middle third of the footing depth.

Where the slab is not cast monolithically with the footing, No. 3 or larger vertical dowels with standard hooks on each end shall be installed at not more than 4 feet (1219 mm) on center in accordance with Figure R403.1.3, Detail 2. Standard hooks shall comply with Section R608.5.4.5.

R403.1.3.4 Interior bearing and braced wall panel footings in Seismic Design Categories D_0, D_1 and D_2. In Seismic Design Categories D_0, D_1 and D_2, interior footings supporting bearing walls or *braced wall panels*, and cast monolithically with a slab on *grade*, shall extend to a depth of not less than 12 inches (305 mm) below the top of the slab. **

R403.1.3.5 Reinforcement. Footing and stem wall reinforcement shall comply with Sections R403.1.3.5.1 through R403.1.3.5.4.

R403.1.3.5.1 Steel reinforcement. Steel reinforcement shall comply with the requirements of ASTM A 615, A 706 or A 996. ASTM A 996 bars produced from rail steel shall be Type R. The minimum yield strength of reinforcing steel shall be 40,000 psi (Grade 40) (276 MPa).

R403.1.3.5.2 Location of reinforcement in wall. The center of vertical reinforcement in stem walls shall be located at the centerline of the wall. Horizontal and vertical reinforcement shall be located in footings and stem walls to provide the minimum cover required by Section R403.1.3.5.3.

R403.1.3.5.3 Support and cover. Reinforcement shall be secured in the proper location in the forms with tie wire or other bar support system to prevent displacement during the concrete placement operation. Steel reinforcement in concrete cast against the earth shall have a minimum cover of 3 inches (75 mm). Minimum cover for reinforcement in concrete cast in removable forms that will be exposed to the earth or weather shall be $1^1/_2$ inches (38 mm) for No. 5 bars and smaller, and 2 inches (50 mm) for No. 6 bars and larger. For concrete cast in removable forms that will not be exposed to the earth or weather, and for concrete cast in stay-in-place forms, minimum cover shall be $^3/_4$ inch (19 mm).

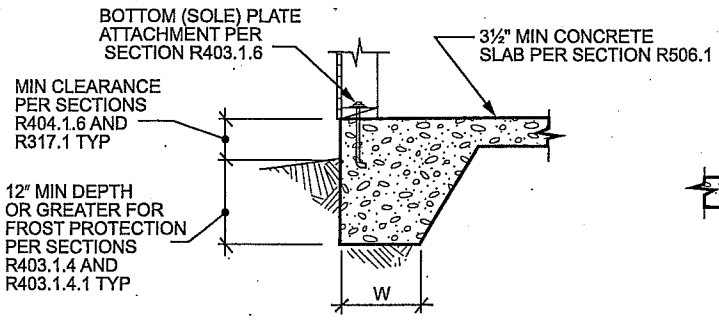

1 MONOLITHIC SLAB-ON-GROUND WITH TURNED-DOWN FOOTING
SCALE: NOT TO SCALE

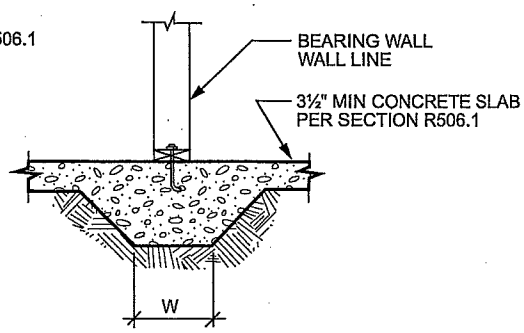

2 THICKENED SLAB-ON-GROUND FOOTING AT BEARING WALLS OR BRACED WALL LINES
SCALE: NOT TO SCALE

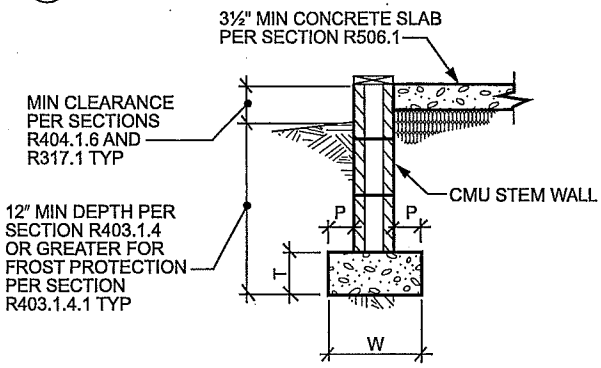

3 SLAB-ON-GROUND WITH MASONRY STEM WALL AND SPREAD FOOTING
SCALE: NOT TO SCALE

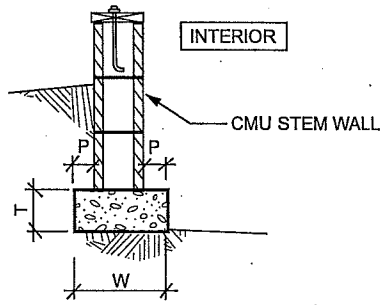

4 BASEMENT OR CRAWL SPACE WITH MASONRY WALL AND SPREAD FOOTING
SCALE: NOT TO SCALE

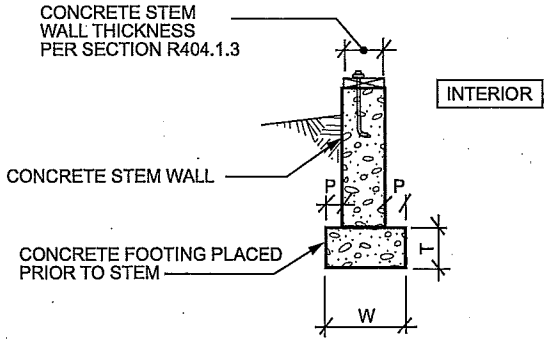

5 BASEMENT OR CRAWL SPACE WITH CONCRETE WALL AND SPREAD FOOTING
SCALE: NOT TO SCALE

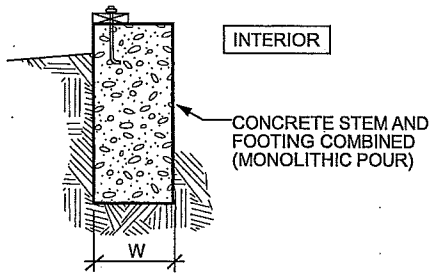

6 BASEMENT OR CRAWL SPACE WITH FOUNDATION WALL BEARING DIRECTLY ON SOIL
SCALE: NOT TO SCALE

For SI: 1 inch = 25.4 mm.

W = Width of footing, T = Thickness of footing and P = Projection per Section R403.1.1

NOTES:

a. See Section R404.3 for sill requirements.
b. See Section R403.1.6 for sill attachment.
c. See Section R506.2.3 for vapor barrier requirements.
d. See Section R403.1 for base.
e. See Figure R403.1.3 for additional footing requirements for structures in SDC D_0, D_1 and D_2 and townhouses in SDC C.
f. See Section R408 for under-floor ventilation and access requirements.

FIGURE R403.1(1)
PLAIN CONCRETE FOOTINGS WITH MASONRY AND CONCRETE STEM WALLS IN SDC A, B AND C[a, b, c, d, e, f]

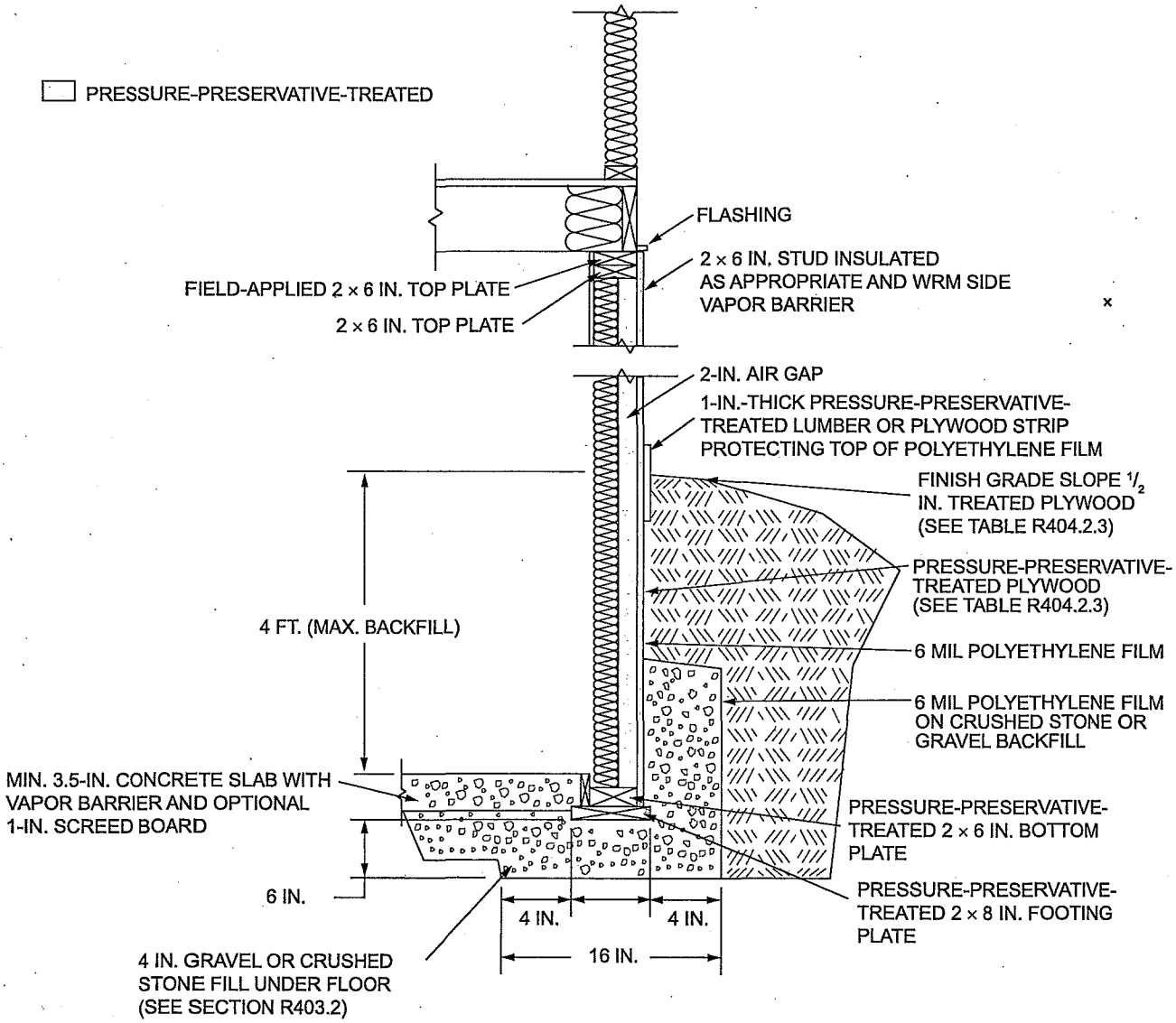

For SI: 1 inch = 25.4 mm, 1 foot = 304.8 mm, 1 mil = 0.0254.

FIGURE R403.1(2)
PERMANENT WOOD FOUNDATION BASEMENT WALL SECTION

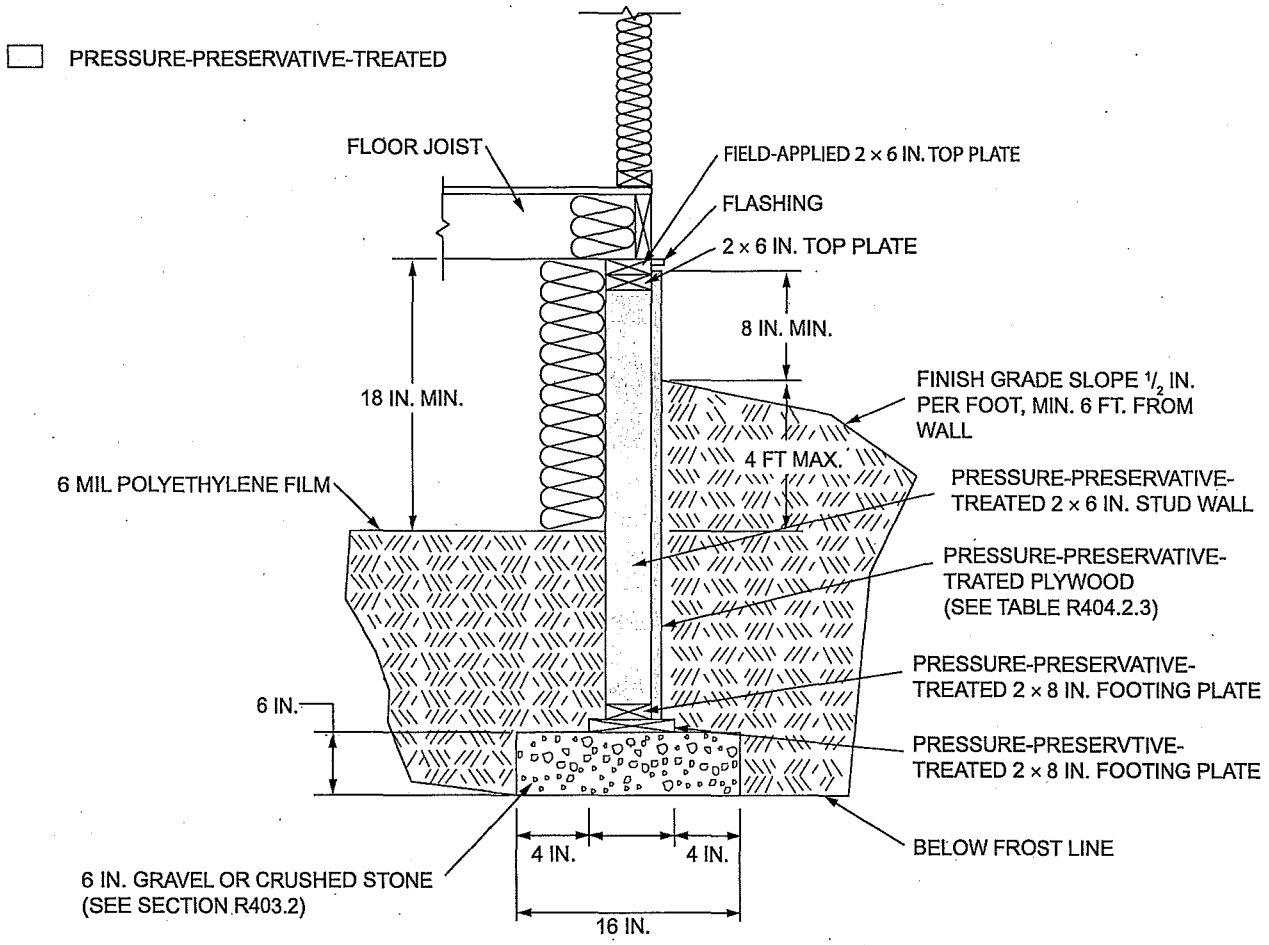

For SI: 1 inch = 25.4 mm, 1 foot = 304.8 mm, 1 mil = 0.0254 mm.

FIGURE R403.1(3)
PERMANENT WOOD FOUNDATION CRAWL SPACE SECTION

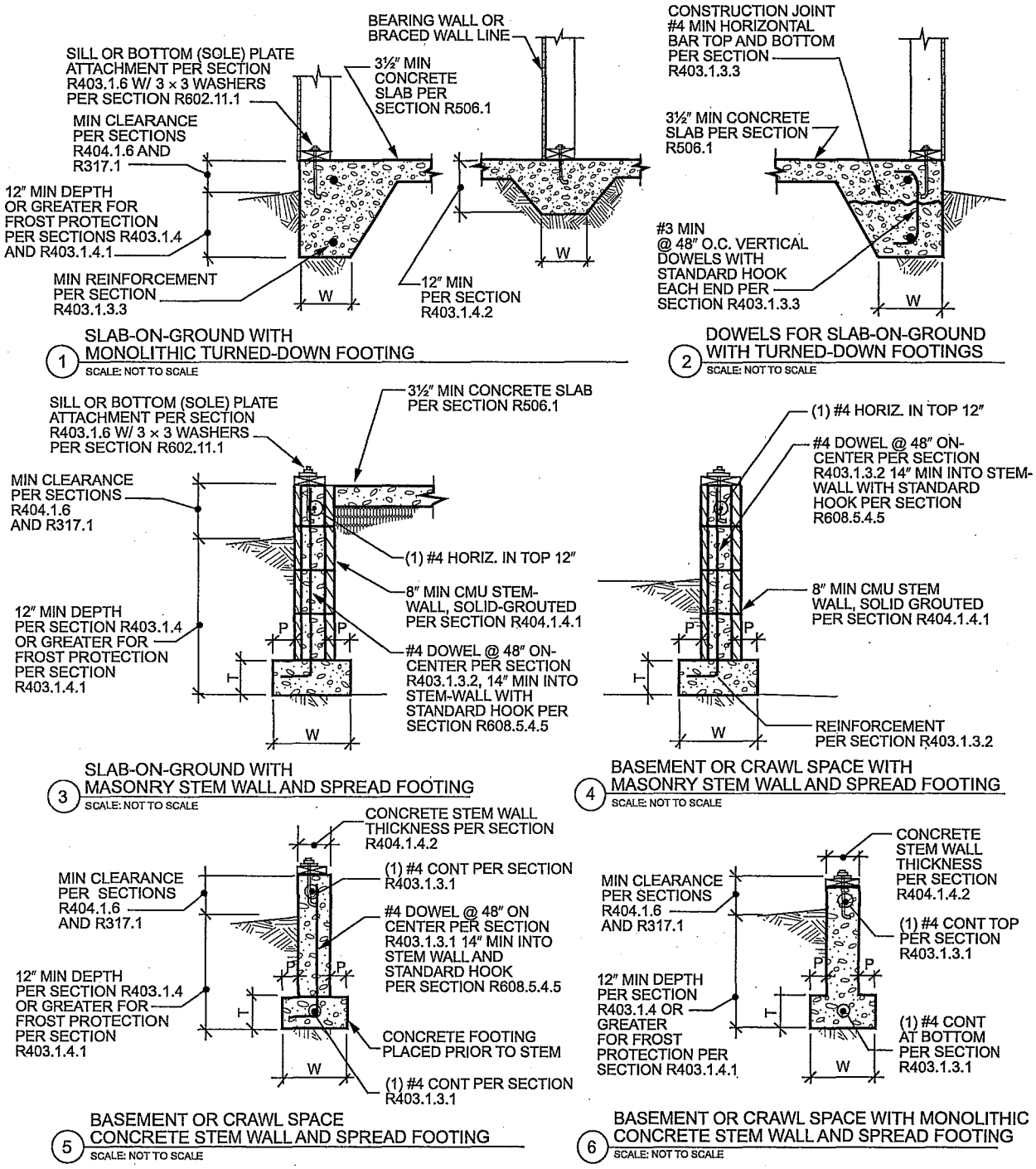

W = Width of footing, T = Thickness of footing and P = Projection per Section R403.1.1

NOTES:

a. See Section R404.3 for sill requirements.
b. See Section R403.1.6 for sill attachment.
c. See Section R506.2.3 for vapor barrier requirements.
d. See Section R403.1 for base.
e. See Section R408 for under-floor ventilation and access requirements.
f. See Section R403.1.3.5 for reinforcement requirements.

FIGURE R403.1.3
REINFORCED CONCRETE FOOTINGS AND MASONRY AND CONCRETE STEM WALLS IN SDC D_0, D_1 AND D_2[a, b, c, d, e, f]

R403.1.3.5.4 Lap splices. Vertical and horizontal reinforcement shall be the longest lengths practical. Where splices are necessary in reinforcement, the length of lap splice shall be in accordance with Table R608.5.4.(1) and Figure R608.5.4(1). The maximum gap between noncontact parallel bars at a lap splice shall not exceed the smaller of one-fifth the required lap length and 6 inches (152 mm) [see Figure R608.5.4(1)].

R403.1.3.6 Isolated concrete footings. In detached one- and two-family dwellings that are three stories or less in height and constructed with stud bearing walls, isolated plain concrete footings supporting columns or pedestals are permitted.

R403.1.4 Minimum depth. Exterior footings shall be placed not less than 12 inches (305 mm) below the undisturbed ground surface. Where applicable, the depth of footings shall also conform to Sections R403.1.4.1 through R403.1.4.2.

R403.1.4.1 Frost protection. Except where otherwise protected from frost, foundation walls, piers and other permanent supports of buildings and structures shall be protected from frost by one or more of the following methods:

1. Extended below the frost line specified in Table R301.2.(1).
2. Constructed in accordance with Section R403.3.
3. Constructed in accordance with ASCE 32.
4. Erected on solid rock.

Exceptions:

1. Protection of freestanding *accessory structures* with an area of 600 square feet (56 m^2) or less, of light-frame construction, with an eave height of 10 feet (3048 mm) or less shall not be required.
2. Protection of freestanding *accessory structures* with an area of 400 square feet (37 m^2) or less, of other than light-frame construction, with an eave height of 10 feet (3048 mm) or less shall not be required.
3. Decks not supported by a dwelling need not be provided with footings that extend below the frost line.

Footings shall not bear on frozen soil unless the frozen condition is permanent.

* **R403.1.5 Slope.** The top surface of footings shall be level. The bottom surface of footings shall not have a slope exceeding one unit vertical in 10 units horizontal (10-percent slope). Footings shall be stepped where it is necessary to change the elevation of the top surface of the footings or where the slope of the bottom surface of the footings will exceed one unit vertical in 10 units horizontal (10-percent slope).

R403.1.6 Foundation anchorage. Wood sill plates and wood walls supported directly on continuous foundations shall be anchored to the foundation in accordance with this section.

Cold-formed steel framing shall be anchored directly to the foundation or fastened to wood sill plates anchored to the foundation. Anchorage of cold-formed steel framing and sill plates supporting cold-formed steel framing shall be in accordance with this section and Section R505.3.1 or R603.3.1.

Wood sole plates at all exterior walls on monolithic slabs, wood sole plates of *braced wall panels* at building interiors on monolithic slabs and all wood sill plates shall be anchored to the foundation with minimum $^1/_2$-inch-diameter (12.7 mm) anchor bolts spaced a maximum of 6 feet (1829 mm) on center or *approved* anchors or anchor straps spaced as required to provide equivalent anchorage to $^1/_2$-inch-diameter (12.7 mm) anchor bolts. Bolts shall extend a minimum of 7 inches (178 mm) into concrete or grouted cells of concrete masonry units. The bolts shall be located in the middle third of the width of the plate. A nut and washer shall be tightened on each anchor bolt. There shall be a minimum of two bolts per plate section with one bolt located not more than 12 inches (305 mm) or less than seven bolt diameters from each end of the plate section. Interior bearing wall sole plates on monolithic slab foundation that are not part of a *braced wall panel* shall be positively anchored with *approved* fasteners. Sill plates and sole plates shall be protected against decay and termites where required by Sections R317 and R318.

Exceptions:

1. Walls 24 inches (610 mm) total length or shorter connecting offset braced wall panels shall be anchored to the foundation with a minimum of one anchor bolt located in the center third of the plate section and shall be attached to adjacent braced wall panels at corners as shown in Item 9 of Table R602.3(1).
2. Connection of walls 12 inches (305 mm) total length or shorter connecting offset *braced wall panels* to the foundation without anchor bolts shall be permitted. The wall shall be attached to adjacent braced wall panels at corners as shown in Item 9 of Table R602.3(1).

R403.1.6.1 Foundation anchorage in Seismic Design Categories C, D_0, D_1 and D_2. In addition to the requirements of Section R403.1.6, the following requirements shall apply to wood light-frame structures in Seismic Design Categories D_0, D_1 and D_2 and wood light-frame townhouses in Seismic Design Category C.

1. Plate washers conforming to Section R602.11.1 shall be provided for all anchor bolts over the full length of required *braced wall lines* except where *approved* anchor straps are used. Properly sized cut washers shall be permitted for anchor bolts in wall lines not containing *braced wall panels*.
2. Interior braced wall plates shall have anchor bolts spaced at not more than 6 feet (1829 mm) on center and located within 12 inches (305 mm) of the

ends of each plate section when supported on a continuous foundation.

3. Interior bearing wall sole plates shall have anchor bolts spaced at not more than 6 feet (1829 mm) on center and located within 12 inches (305 mm) of the ends of each plate section when supported on a continuous foundation.
4. The maximum anchor bolt spacing shall be 4 feet (1219 mm) for buildings over two stories in height.
5. Stepped cripple walls shall conform to Section R602.11.2.
6. Where continuous wood foundations in accordance with Section R404.2 are used, the force transfer shall have a capacity equal to or greater than the connections required by Section R602.11.1 or the *braced wall panel* shall be connected to the wood foundations in accordance with the *braced wall panel*-to-floor fastening requirements of Table R602.3(1).

R403.1.7 Footings on or adjacent to slopes. The placement of buildings and structures on or adjacent to slopes steeper than one unit vertical in three units horizontal (33.3-percent slope) shall conform to Sections R403.1.7.1 through R403.1.7.4.

R403.1.7.1 Building clearances from ascending slopes. In general, buildings below slopes shall be set a sufficient distance from the slope to provide protection from slope drainage, erosion and shallow failures. Except as provided in Section R403.1.7.4 and Figure R403.1.7.1, the following criteria will be assumed to provide this protection. Where the existing slope is steeper than one unit vertical in one unit horizontal (100-percent slope), the toe of the slope shall be assumed to be at the intersection of a horizontal plane drawn from the top of the foundation and a plane drawn tangent to the slope at an angle of 45 degrees (0.79 rad) to the horizontal. Where a retaining wall is constructed at the toe of the slope, the height of the slope shall be measured from the top of the wall to the top of the slope.

R403.1.7.2 Footing setback from descending slope surfaces. Footings on or adjacent to slope surfaces shall be founded in material with an embedment and setback from the slope surface sufficient to provide vertical and lateral support for the footing without detrimental settlement. Except as provided for in Section R403.1.7.4 and Figure R403.1.7.1, the following setback is deemed adequate to meet the criteria. Where the slope is steeper than one unit vertical in one unit horizontal (100-percent slope), the required setback shall be measured from an imaginary plane 45 degrees (0.79 rad) to the horizontal, projected upward from the toe of the slope.

R403.1.7.3 Foundation elevation. On graded sites, the top of any exterior foundation shall extend above the elevation of the street gutter at point of discharge or the inlet of an *approved* drainage device a minimum of 12 inches (305 mm) plus 2 percent. Alternate elevations are permitted subject to the approval of the *building official*, provided it can be demonstrated that required drainage to the point of discharge and away from the structure is provided at all locations on the site.

R403.1.7.4 Alternate setbacks and clearances. Alternate setbacks and clearances are permitted, subject to the approval of the *building official*. The *building official* is permitted to require an investigation and recommendation of a qualified engineer to demonstrate that the intent of this section has been satisfied. Such an investigation shall include consideration of material, height of slope, slope gradient, load intensity and erosion characteristics of slope material.

R403.1.8 Foundations on expansive soils. Foundation and floor slabs for buildings located on expansive soils shall be designed in accordance with Section 1808.6 of the *International Building Code*.

Exception: Slab-on-ground and other foundation systems which have performed adequately in soil conditions similar to those encountered at the building site are permitted subject to the approval of the *building official*.

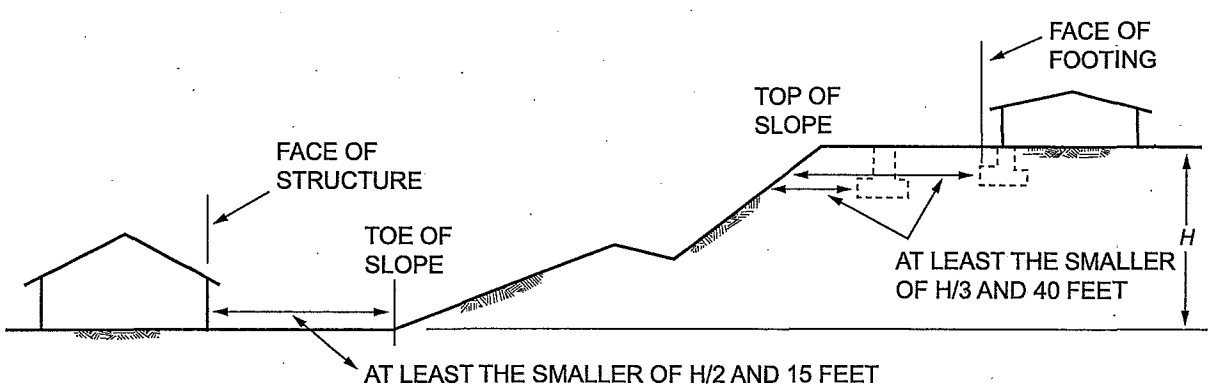

For SI: 1 foot = 304.8 mm.

FIGURE R403.1.7.1
FOUNDATION CLEARANCE FROM SLOPES

R403.1.8.1 Expansive soils classifications. Soils meeting all four of the following provisions shall be considered expansive, except that tests to show compliance with Items 1, 2 and 3 shall not be required if the test prescribed in Item 4 is conducted:

1. Plasticity Index (PI) of 15 or greater, determined in accordance with ASTM D 4318.
2. More than 10 percent of the soil particles pass a No. 200 sieve (75 μm), determined in accordance with ASTM D 422.
3. More than 10 percent of the soil particles are less than 5 micrometers in size, determined in accordance with ASTM D 422.
4. Expansion Index greater than 20, determined in accordance with ASTM D 4829.

R403.2 Footings for wood foundations. Footings for wood foundations shall be in accordance with Figures R403.1(2) and R403.1(3). Gravel shall be washed and well graded. The maximum size stone shall not exceed $^3/_4$ inch (19.1 mm). Gravel shall be free from organic, clayey or silty soils. Sand shall be coarse, not smaller than $^1/_{16}$-inch (1.6 mm) grains and shall be free from organic, clayey or silty soils. Crushed stone shall have a maximum size of $^1/_2$ inch (12.7 mm).

R403.3 Frost-protected shallow foundations. For buildings where the monthly mean temperature of the building is maintained at a minimum of 64°F (18°C), footings are not required to extend below the frost line when protected from frost by insulation in accordance with Figure R403.3(1) and Table R403.3(1). Foundations protected from frost in accordance with Figure R403.3(1) and Table R403.3(1) shall not be used for unheated spaces such as porches, utility rooms, garages and carports, and shall not be attached to basements or crawl spaces that are not maintained at a minimum monthly mean temperature of 64°F (18°C).

Materials used below *grade* for the purpose of insulating footings against frost shall be *labeled* as complying with ASTM C 578.

R403.3.1 Foundations adjoining frost-protected shallow foundations. Foundations that adjoin frost-protected shallow foundations shall be protected from frost in accordance with Section R403.1.4.

R403.3.1.1 Attachment to unheated slab-on-ground structure. Vertical wall insulation and horizontal insulation of frost-protected shallow foundations that adjoin a slab-on-ground foundation that does not have a monthly mean temperature maintained at a minimum of 64°F (18°C) shall be in accordance with Figure R403.3(3) and Table R403.3(1). Vertical wall insulation shall extend between the frost-protected shallow foundation and the adjoining slab foundation. Required horizontal insulation shall be continuous under the adjoining slab foundation and through any foundation walls adjoining the frost-protected shallow foundation. Where insulation passes through a foundation wall, it shall be either of a type complying with this section and having bearing capacity equal to or greater than the structural loads imposed by the building, or the building shall be designed and constructed using beams, lintels, cantilevers or other means of transferring building loads such that the structural loads of the building do not bear on the insulation.

R403.3.1.2 Attachment to heated structure. Where a frost-protected shallow foundation abuts a structure that has a monthly mean temperature maintained at a minimum of 64°F (18°C), horizontal insulation and vertical wall insulation shall not be required between the frost-protected shallow foundation and the adjoining structure. Where the frost-protected shallow foundation abuts the heated structure, the horizontal insulation and vertical wall insulation shall extend along the adjoining foundation in accordance with Figure R403.3(4) a distance of not less than Dimension A in Table R403.3(1).

Exception: Where the frost-protected shallow foundation abuts the heated structure to form an inside corner, vertical insulation extending along the adjoining foundation is not required.

R403.3.2 Protection of horizontal insulation below ground. Horizontal insulation placed less than 12 inches (305 mm) below the ground surface or that portion of horizontal insulation extending outward more than 24 inches (610 mm) from the foundation edge shall be protected against damage by use of a concrete slab or asphalt paving on the ground surface directly above the insulation or by cementitious board, plywood rated for below-ground use, or other *approved* materials placed below ground, directly above the top surface of the insulation.

R403.3.3 Drainage. Final *grade* shall be sloped in accordance with Section R401.3. In other than Group I Soils, as detailed in Table R405.1, gravel or crushed stone beneath horizontal insulation below ground shall drain to daylight or into an *approved* sewer system.

R403.3.4 Termite protection. The use of foam plastic in areas of "very heavy" termite infestation probability shall be in accordance with Section R318.4.

R403.4 Footings for precast concrete foundations. Footings for precast concrete foundations shall comply with Section R403.4.

R403.4.1 Crushed stone footings. Clean crushed stone shall be free from organic, clayey or silty soils. Crushed stone shall be angular in nature and meet ASTM C 33, with the maximum size stone not to exceed $^1/_2$ inch (12.7 mm) and the minimum stone size not to be smaller than $^1/_{16}$ inch (1.6 mm). Crushed stone footings for precast foundations shall be installed in accordance with Figure R403.4(1) and Table R403.4. Crushed stone footings shall be consolidated using a vibratory plate in a maximum of 8-inch (203 mm) lifts. Crushed stone footings shall be limited to Seismic Design Categories A, B and C.

R403.4.2 Concrete footings. Concrete footings shall be installed in accordance with Section R403.1 and Figure R403.4(2).

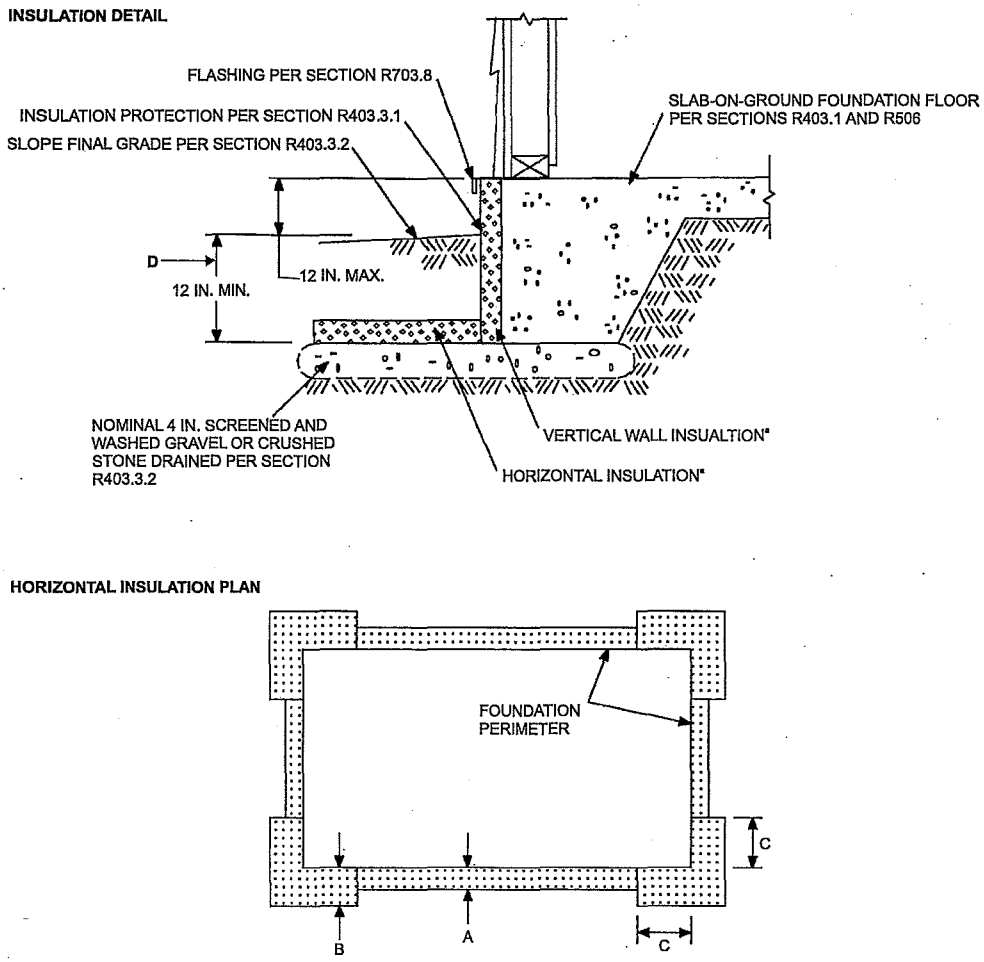

For SI: 1 inch = 25.4 mm.

a. See Table R403.3(1) for required dimensions and *R*-values for vertical and horizontal insulation and minimum footing depth.

FIGURE R403.3(1)
INSULATION PLACEMENT FOR FROST-PROTECTED FOOTINGS IN HEATED BUILDINGS

TABLE R403.3(1)
MINIMUM FOOTING DEPTH AND INSULATION REQUIREMENTS FOR FROST-PROTECTED FOOTINGS IN HEATED BUILDINGS[a]

AIR FREEZING INDEX (°F-days)[b]	MINIMUM FOOTING DEPTH, D (inches)	VERTICAL INSULATION R-VALUE[c, d]	HORIZONTAL INSULATION R-VALUE[c, e]		HORIZONTAL INSULATION DIMENSIONS PER FIGURE R403.3(1) (inches)		
			Along walls	At corners	A	B	C
1,500 or less	12	4.5	Not required	Not required	Not required	Not required	Not required
2,000	14	5.6	Not required	Not required	Not required	Not required	Not required
2,500	16	6.7	1.7	4.9	12	24	40
3,000	16	7.8	6.5	8.6	12	24	40
3,500	16	9.0	8.0	11.2	24	30	60
4,000	16	10.1	10.5	13.1	24	36	60

For SI: 1 inch = 25.4 mm, °C = [(°F) - 32]/1.8.

a. Insulation requirements are for protection against frost damage in heated buildings. Greater values may be required to meet energy conservation standards.

b. See Figure R403.3(2) or Table R403.3(2) for Air Freezing Index values.

c. Insulation materials shall provide the stated minimum *R*-values under long-term exposure to moist, below-ground conditions in freezing climates. The following *R*-values shall be used to determine insulation thicknesses required for this application: Type II expanded polystyrene-2.4*R* per inch; Type IV extruded polystyrene-4.5*R* per inch; Type VI extruded polystyrene-4.5*R* per inch; Type IX expanded polystyrene-3.2*R* per inch; Type X extruded polystyrene-4.5*R* per inch.

d. Vertical insulation shall be expanded polystyrene insulation or extruded polystyrene insulation.

e. Horizontal insulation shall be expanded polystyrene insulation or extruded polystyrene insulation.

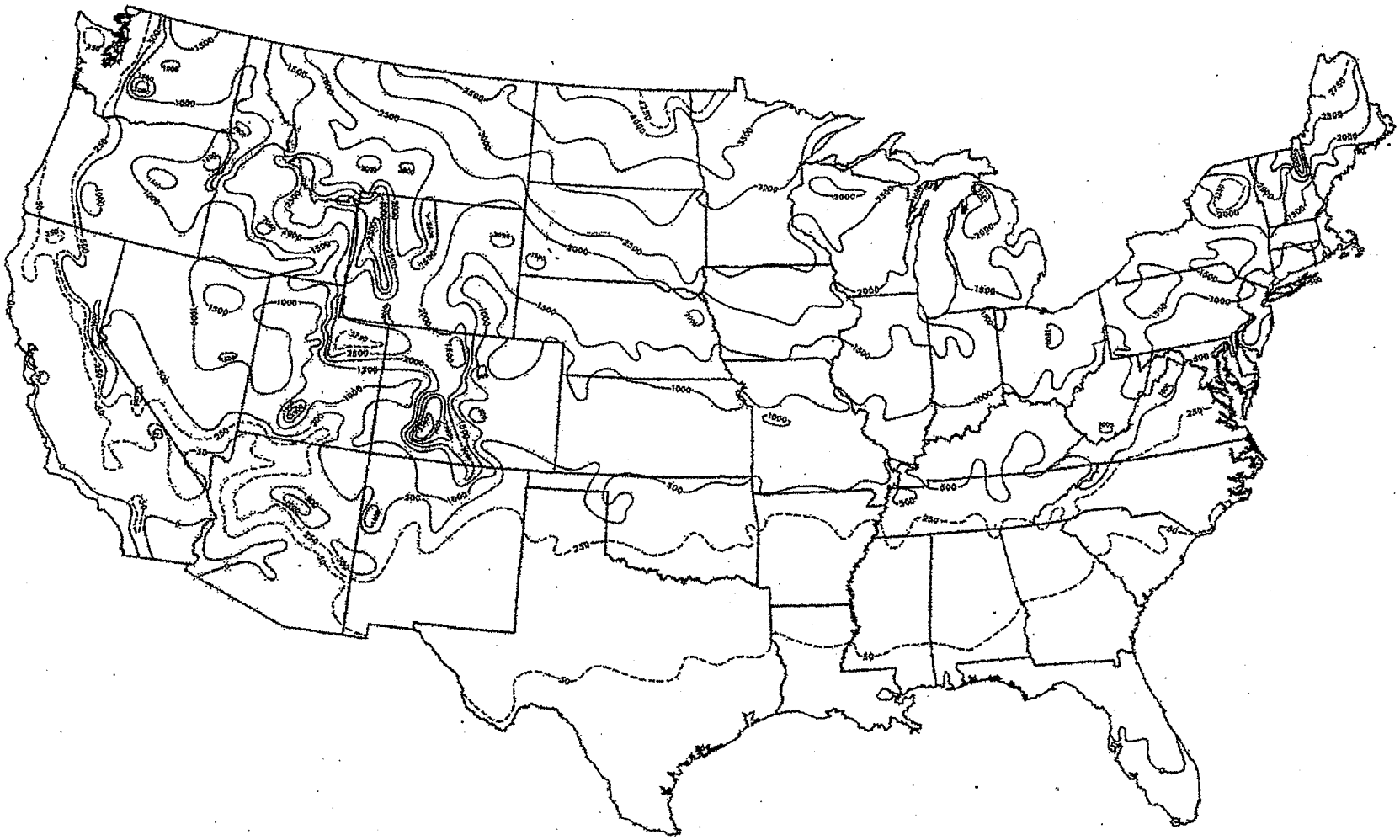

For SI: °C = [(°F) -32]/1.8.

Note: The air-freezing index is defined as cumulative degree days below 32°F. It is used as a measure of the combined magnitude and duration of air temperature below freezing. The index was computed over a 12-month period (July-June) for each of the 3,044 stations used in the above analysis. Dates from the 1951-80 period were fitted to a Weibull probability distribution to produce an estimate of the 100-year return period.

FIGURE R403.3(2)
AIR-FREEZING INDEX AN ESTIMATE OF THE 100-YEAR RETURN PERIOD

TABLE R403.3(2)
AIR-FREEZING INDEX FOR U.S. LOCATIONS BY COUNTY

STATE	AIR-FREEZING INDEX					
	1500 or less	2000	2500	3000	3500	4000
Alabama	All counties	—	—	—	—	—
Alaska	Ketchikan Gateway, Prince of Wales-Outer Ketchikan (CA), Sitka, Wrangell-Petersburg (CA)	—	Aleutians West (CA), Haines, Juneau, Skagway-Hoonah-Angoon (CA), Yakutat	—	—	All counties not listed
Arizona	All counties	—	—	—	—	—
Arkansas	All counties	—	—	—	—	—
California	All counties not listed	Nevada, Sierra	—	—	—	—
Colorado	All counties not listed	Archuleta, Custer, Fremont, Huerfano, Las Animas, Ouray, Pitkin, San Miguel	Clear Creek, Conejos, Costilla, Dolores, Eagle, La Plata, Park, Routt, San Juan, Summit	Alamosa, Grand, Jackson, Larimer, Moffat, Rio Blanco, Rio Grande	Chaffee, Gunnison, Lake, Saguache	Hinsdale, Mineral
Connecticut	All counties not listed	Hartford, Litchfield	—	—	—	—
Delaware	All counties	—	—	—	—	—
District of Columbia	All counties	—	—	—	—	—
Florida	All counties	—	—	—	—	—
Georgia	All counties	—	—	—	—	—
Hawaii	All counties	—	—	—	—	—
Idaho	All counties not listed	Adams, Bannock, Blaine, Clearwater, Idaho, Lincoln, Oneida, Power, Valley, Washington	Bingham, Bonneville, Camas, Caribou, Elmore, Franklin, Jefferson, Madison, Teton	Bear Lake, Butte, Custer, Fremont, Lemhi	Clark	—
Illinois	All counties not listed	Boone, Bureau, Cook, Dekalb, DuPage, Fulton, Grundy, Henderson, Henry, Iroquois, Jo Daviess, Kane, Kankakee, Kendall, Knox, La Salle, Lake, Lee, Livingston, Marshall, Mason, McHenry, McLean, Mercer, Peoria, Putnam, Rock Island, Stark, Tazewell, Warren, Whiteside, Will, Woodford	Carroll, Ogle, Stephenson, Winnebago	—	—	—
Indiana	All counties not listed	Allen, Benton, Cass, Fountain, Fulton, Howard, Jasper, Kosciusko, La Porte, Lake, Marshall, Miami, Newton, Porter, Pulaski, Starke, Steuben, Tippecanoe, Tipton, Wabash, Warren, White	—	—	—	—

(continued)

TABLE R403.3(2)—continued
AIR-FREEZING INDEX FOR U.S. LOCATIONS BY COUNTY

STATE	AIR-FREEZING INDEX					
	1500 or less	2000	2500	3000	3500	4000
Iowa	Appanoose, Davis, Fremont, Lee, Van Buren	All counties not listed	Allamakee, Black Hawk, Boone, Bremer, Buchanan, Buena Vista, Butler, Calhoun, Cerro Gordo, Cherokee, Chickasaw, Clay, Clayton, Delaware, Dubuque, Fayette, Floyd, Franklin, Grundy, Hamilton, Hancock, Hardin, Humboldt, Ida, Jackson, Jasper, Jones, Linn, Marshall, Palo Alto, Plymouth, Pocahontas, Poweshiek, Sac, Sioux, Story, Tama, Webster, Winnebago, Woodbury, Worth, Wright	Dickinson, Emmet, Howard, Kossuth, Lyon, Mitchell, O'Brien, Osceola, Winneshiek	—	—
Kansas	All counties	—	—	—	—	—
Kentucky	All counties	—	—	—	—	—
Louisiana	All counties	—	—	—	—	—
Maine	York	Knox, Lincoln, Sagadahoc	Androscoggin, Cumberland, Hancock, Kennebec, Waldo, Washington	Aroostook, Franklin, Oxford, Penobscot, Piscataquis, Somerset	—	—
Maryland	All counties	—	—	—	—	—
Massachusetts	All counties not listed	Berkshire, Franklin, Hampden, Worcester	—	—	—	—
Michigan	Berrien, Branch, Cass, Kalamazoo, Macomb, Ottawa, St. Clair, St. Joseph	All counties not listed	Alger, Charlevoix, Cheboygan, Chippewa, Crawford, Delta, Emmet, Iosco, Kalkaska, Lake, Luce, Mackinac, Menominee, Missaukee, Montmorency, Ogemaw, Osceola, Otsego, Roscommon, Schoolcraft, Wexford	Baraga, Dickinson, Iron, Keweenaw, Marquette	Gogebic, Houghton, Ontonagon	—
Minnesota	—	—	Houston, Winona	All counties not listed	Aitkin, Big Stone, Carlton, Crow Wing, Douglas, Itasca, Kanabec, Lake, Morrison, Pine, Pope, Stearns, Stevens, Swift, Todd, Wadena	Becker, Beltrami, Cass, Clay, Clearwater, Grant, Hubbard, Kittson, Koochiching, Lake of the Woods, Mahnomen, Marshall, Norman, Otter Tail, Pennington, Polk, Red Lake, Roseau, St. Louis, Traverse, Wilkin

(continued)

2561

TABLE R403.3(2)—continued
AIR-FREEZING INDEX FOR U.S. LOCATIONS BY COUNTY

STATE	AIR-FREEZING INDEX					
	1500 or less	2000	2500	3000	3500	4000
Mississippi	All counties	—	—	—	—	—
Missouri	All counties not listed	Atchison, Mercer, Nodaway, Putnam	—	—	—	—
Montana	Mineral	Broadwater, Golden Valley, Granite, Lake, Lincoln, Missoula, Ravalli, Sanders, Sweet Grass	Big Horn, Carbon, Jefferson, Judith Basin, Lewis and Clark, Meagher, Musselshell, Powder River, Powell, Silver Bow, Stillwater, Westland	Carter, Cascade, Deer Lodge, Falcon, Fergus, Flathead, Gallanting, Glacier, Madison, Park, Petroleum, Ponder, Rosebud, Teton, Treasure, Yellowstone	Beaverhead, Blaine, Chouteau, Custer, Dawson, Garfield, Liberty, McCone, Prairie, Toole, Wibaux	Daniels, Hill, Phillips, Richland, Roosevelt, Sheridan, Valley
Nebraska	Adams, Banner, Chase, Cheyenne, Clay, Deuel, Dundy, Fillmore, Franklin, Frontier, Furnas, Gage, Garden, Gosper, Harlan, Hayes, Hitchcock, Jefferson, Kimball, Morrill, Nemaha, Nuckolls, Pawnee, Perkins, Phelps, Red Willow, Richardson, Saline, Scotts Bluff, Seward, Thayer, Webster	All counties not listed	Boyd, Burt, Cedar, Cuming, Dakota, Dixon, Dodge, Knox, Thurston	—	—	—
Nevada	All counties not listed	Elko, Eureka, Nye, Washoe, White Pine	—	—	—	—
New Hampshire	—	All counties not listed	—	—	—	Carroll, Coos, Grafton
New Jersey	All counties	—	—	—	—	—
New Mexico	All counties not listed	Rio Arriba	Colfax, Mora, Taos	—	—	—
New York	Albany, Bronx, Cayuga, Columbia, Cortland, Dutchess, Genessee, Kings, Livingston, Monroe, Nassau, New York, Niagara, Onondaga, Ontario, Orange, Orleans, Putnam, Queens, Richmond, Rockland, Seneca, Suffolk, Wayne, Westchester, Yates	All counties not listed	Clinton, Essex, Franklin, Hamilton, Herkimer, Jefferson, Lewis, St. Lawrence, Warren	—	—	—
North Carolina	All counties	—	—	—	—	—

(continued)

TABLE R403.3(2)—continued
AIR-FREEZING INDEX FOR U.S. LOCATIONS BY COUNTY

STATE	AIR-FREEZING INDEX					
	1500 or less	2000	2500	3000	3500	4000
North Dakota	—	—	—	Billings, Bowman	Adams, Dickey, Golden Valley, Hettinger, LaMoure, Oliver, Ransom, Sargent, Sioux, Slope, Stark	All counties not listed
Ohio	All counties not listed	Ashland, Crawford, Defiance, Holmes, Huron, Knox, Licking, Morrow, Paulding, Putnam, Richland, Seneca, Williams	—	—	—	—
Oklahoma	All counties	—	—	—	—	—
Oregon	All counties not listed	Baker, Crook, Grant, Harney	—	—	—	—
Pennsylvania	All counties not listed	Berks, Blair, Bradford, Cambria, Cameron, Centre, Clarion, Clearfield, Clinton, Crawford, Elk, Forest, Huntingdon, Indiana, Jefferson, Lackawanna, Lycoming, McKean, Pike, Potter, Susquehanna, Tioga, Venango, Warren, Wayne, Wyoming	—	—	—	—
Rhode Island	All counties	—	—	—	—	—
South Carolina	All counties	—	—	—	—	—
South Dakota	—	Bennett, Custer, Fall River, Lawrence, Mellette, Shannon, Todd, Tripp	Bon Homme, Charles Mix, Davison, Douglas, Gregory, Jackson, Jones, Lyman	All counties not listed	Beadle, Brookings, Brown, Campbell, Codington, Corson, Day, Deuel, Edmunds, Faulk, Grant, Hamlin, Kingsbury, Marshall, McPherson, Perkins, Roberts, Spink, Walworth	—
Tennessee	All counties	—	—	—	—	—
Texas	All counties	—	—	—	—	—
Utah	All counties not listed	Box Elder, Morgan, Weber	Garfield, Salt Lake, Summit	Carbon, Daggett, Duchesne, Rich, Sanpete, Uintah, Wasatch	—	—

(continued)

TABLE R403.3(2)—continued
AIR-FREEZING INDEX FOR U.S. LOCATIONS BY COUNTY

STATE	AIR-FREEZING INDEX					
	1500 or less	2000	2500	3000	3500	4000
Vermont	—	Bennington, Grand Isle, Rutland, Windham	Addison, Chittenden, Franklin, Orange, Washington, Windsor	Caledonia, Essex, Lamoille, Orleans	—	—
Virginia	All counties	—	—	—	—	—
Washington	All counties not listed	Chelan, Douglas, Ferry, Okanogan	—	—	—	—
West Virginia	All counties	—	—	—	—	—
Wisconsin	—	Kenosha, Kewaunee, Racine, Sheboygan, Walworth	All counties not listed	Ashland, Barron, Burnett, Chippewa, Clark, Dunn, Eau Claire, Florence, Forest, Iron, Jackson, La Crosse, Langlade, Marathon, Monroe, Pepin, Polk, Portage, Price, Rust, St. Croix, Taylor, Trempealeau, Vilas, Wood	Bayfield, Douglas, Lincoln, Oneida, Sawyer, Washburn	—
Wyoming	Goshen, Platte	Converse, Crook, Laramie, Niobrara	Campbell, Carbon, Hot Springs, Johnson, Natrona, Sheridan, Uinta, Weston	Albany, Big Horn, Park, Washakie	Fremont, Teton	Lincoln, Sublette, Sweetwater

INSULATION DETAIL

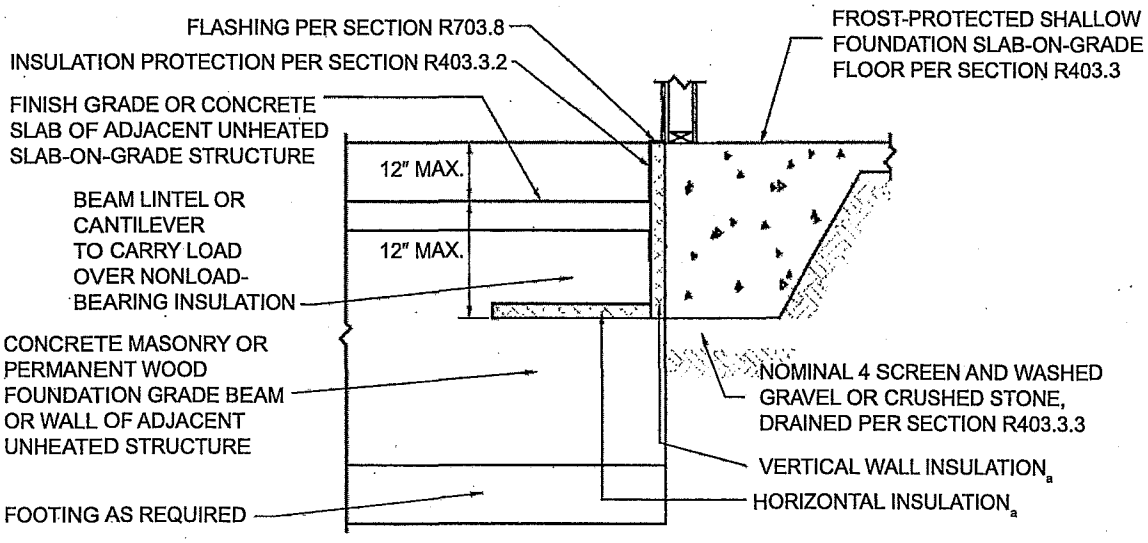

HORIZONTAL INSULATION PLAN

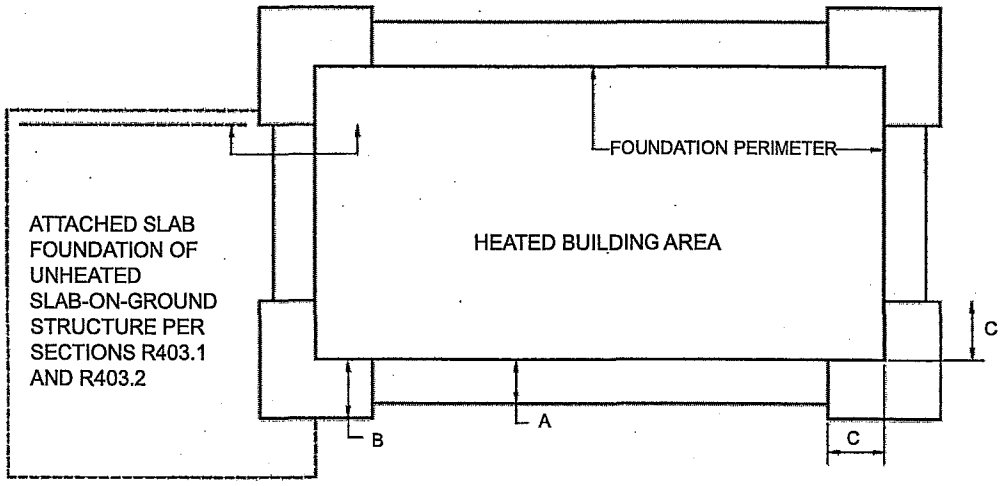

For SI: 1 inch = 25.4 mm.

a. See Table R403.3(1) for required dimensions and *R*-values for vertical and horizontal insulation.

FIGURE R403.3(3)
INSULATION PLACEMENT FOR FROST-PROTECTED FOOTINGS ADJACENT TO UNHEATED SLAB-ON-GROUND STRUCTURE

2565

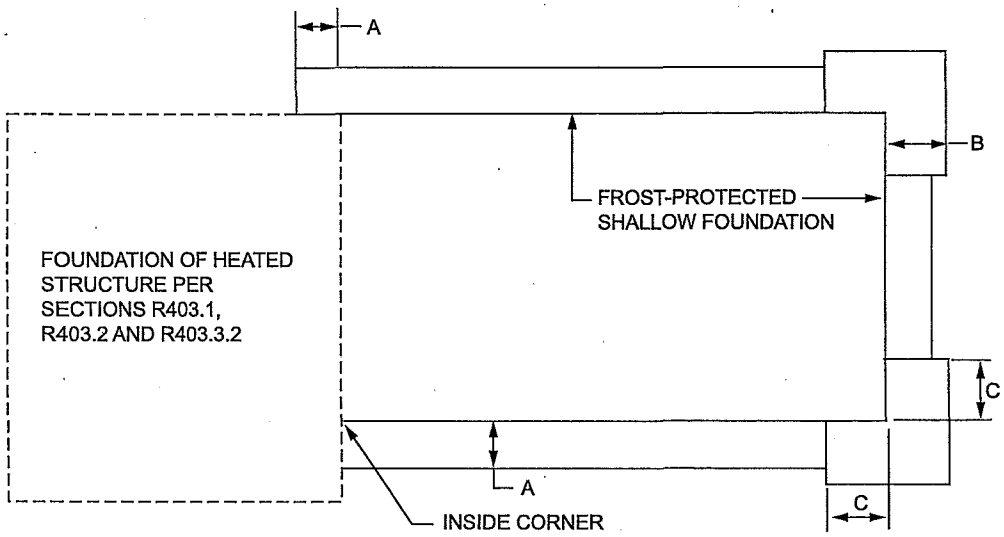

FIGURE R403.3(4)
INSULATION PLACEMENT FOR FROST-PROTECTED FOOTINGS ADJACENT TO HEATED STRUCTURE

TABLE R403.4
MINIMUM DEPTH OF CRUSHED STONE FOOTINGS[a] (D), (inches)

NUMBER OF STORIES	UNIFORM WALL LOAD	LOAD-BEARING VALUE OF SOIL (psf)															
		1500				2000				3000				4000			
		MH, CH, CL, ML				SC, GC, SM, GM, SP, SW				GP, GW							
		Wall width (inches)				Wall width (inches)				Wall width (inches)				Wall width (inches)			
		6	8	10	12	6	8	10	12	6	8	10	12	6	8	10	12
Conventional light-frame construction																	
1-story	1100 plf	6	4	4	4	6	4	4	4	6	4	4	4	6	4	4	4
2-story	1800 plf	8	6	4	4	6	4	4	4	6	4	4	4	6	4	4	4
3-story	2900 plf	16	14	12	10	10	8	6	6	6	4	4	4	6	4	4	4
4-inch brick veneer over light-frame or 8-inch hollow concrete masonry																	
1-story	1500 plf	6	4	4	4	6	4	4	4	6	4	4	4	6	4	4	4
2-story	2700 plf	14	12	10	8	10	8	6	4	6	4	4	4	6	4	4	4
3-story	4000 plf	22	22	20	18	16	14	12	10	10	8	6	4	6	4	4	4
8-inch solid or fully grouted masonry																	
1-story	2000 plf	10	8	6	4	6	4	4	4	6	4	4	4	6	4	4	4
2-story	3600 plf	20	18	16	16	14	12	10	8	8	6	4	4	6	4	4	4
3-story	5300 plf	32	30	28	26	22	22	20	18	14	12	10	8	10	8	6	4

For SI: 1 inch = 25.4 mm, 1 plf = 14.6 N/m, 1 pound per square foot = 47.9 N/m^2.

a. Linear interpolation of stone depth between wall widths is permitted within each Load-Bearing Value of Soil (psf).

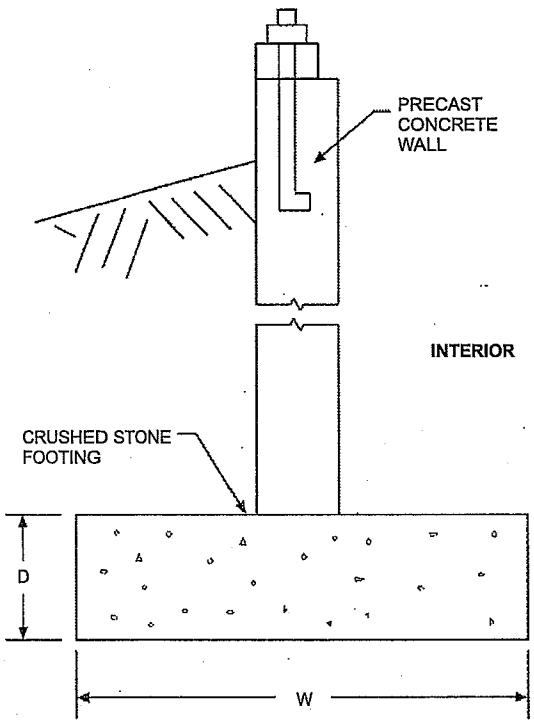

FIGURE R403.4(1)
BASEMENT OR CRAWL SPACE WITH PRECAST FOUNDATION WALL BEARING ON CRUSHED STONE

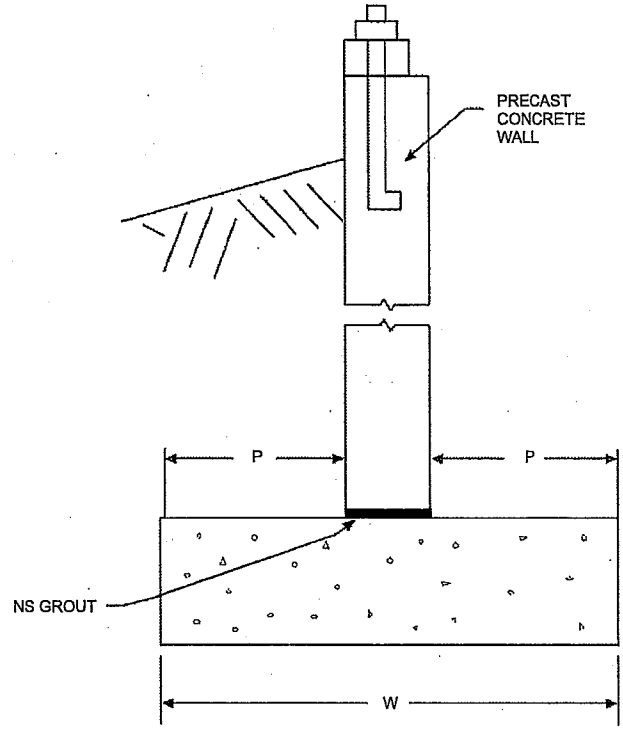

FIGURE R403.4(2)
BASEMENT OR CRAWL SPACE WITH PRECAST FOUNDATION WALL ON SPREAD FOOTING

SECTION R404
FOUNDATION AND RETAINING WALLS

R404.1 Concrete and masonry foundation walls. Concrete foundation walls shall be selected and constructed in accordance with the provisions of Section R404.1.3. Masonry foundation walls shall be selected and constructed in accordance with the provisions of Section R404.1.2.

** **R404.1.1 Design required.** Concrete or masonry foundation walls shall be designed in accordance with accepted engineering practice where either of the following conditions exists:

1. Walls are subject to hydrostatic pressure from ground water.
2. Walls supporting more than 48 inches (1219 mm) of unbalanced backfill that do not have permanent lateral support at the top or bottom.

R404.1.2 Design of masonry foundation walls. Masonry foundation walls shall be designed and constructed in accordance with the provisions of this section or in accordance with the provisions of TMS 402/ACI 530/ASCE 5. When TMS 402/ACI 530/ASCE 5 or the provisions of this section are used to design masonry foundation walls, project drawings, typical details and specifications are not required to bear the seal of the architect or engineer responsible for design, unless otherwise required by the state law of the jurisdiction having authority.

R404.1.2.1 Masonry foundation walls. Concrete masonry and clay masonry foundation walls shall be constructed as set forth in Table R404.1.1(1), R404.1.1(2), R404.1.1(3) or R404.1.1(4) and shall also comply with applicable provisions of Section R606. In buildings assigned to Seismic Design Categories D_0, D_1 and D_2, concrete masonry and clay masonry foundation walls shall also comply with Section R404.1.4.1. Rubble stone masonry foundation walls shall be constructed in accordance with Sections R404.1.8 and R606.3.2. Rubble stone masonry walls shall not be used in Seismic Design Categories D_0, D_1 and D_2.

R404.1.3 Concrete foundation walls. Concrete foundation walls that support light-frame walls shall be designed and constructed in accordance with the provisions of this section, ACI 318, ACI 332 or PCA 100. Concrete foundation walls that support above-grade concrete walls that are within the applicability limits of Section R608.2 shall be designed and constructed in accordance with the provisions of this section, ACI 318, ACI 332 or PCA 100. Concrete foundation walls that support above-grade concrete walls that are not within the applicability limits of Section R608.2 shall be designed and constructed in accordance with the provisions of ACI 318, ACI 332 or PCA 100. When ACI 318, ACI 332, PCA 100 or the provisions of this section are used to design concrete foundation walls, project drawings, typical details and specifications are not required to bear the seal of the architect or engineer responsible for design, unless otherwise required by the state law of the *jurisdiction* having authority.

TABLE R404.1.1(1)
PLAIN MASONRY FOUNDATION WALLS[f]

MAXIMUM WALL HEIGHT (feet)	MAXIMUM UNBALANCED BACKFILL HEIGHT[c] (feet)	PLAIN MASONRY[a] MINIMUM NOMINAL WALL THICKNESS (inches)		
		Soil classes[b]		
		GW, GP, SW and SP	GM, GC, SM, SM-SC and ML	SC, MH, ML-CL and inorganic CL
5	4	6 solid[d] or 8	6 solid[d] or 8	6 solid[d] or 8
	5	6 solid[d] or 8	8	10
6	4	6 solid[d] or 8	6 solid[d] or 8	6 solid[d] or 8
	5	6 solid[d] or 8	8	10
	6	8	10	12
7	4	6 solid[d] or 8	8	8
	5	6 solid[d] or 8	10	10
	6	10	12	10 solid[d]
	7	12	10 solid[d]	12 solid[d]
8	4	6 solid[d] or 8	6 solid[d] or 8	8
	5	6 solid[d] or 8	10	12
	6	10	12	12 solid[d]
	7	12	12 solid[d]	Footnote e
	8	10 grout[d]	12 grout[d]	Footnote e
9	4	6 grout[d] or 8 solid[d] or 12	6 grout[d] or 8 solid[d]	8 grout[d] or 10 solid[d]
	5	6 grout[d] or 10 solid[d]	8 grout[d] or 12 solid[d]	8 grout[d]
	6	8 grout[d] or 12 solid[d]	10 grout[d]	10 grout[d]
	7	10 grout[d]	10 grout[d]	12 grout
	8	10 grout[d]	12 grout	Footnote e
	9	12 grout	Footnote e	Footnote e

For SI: 1 inch = 25.4 mm, 1 foot = 304.8 mm, 1 pound per square inch = 6.895 Pa.

a. Mortar shall be Type M or S and masonry shall be laid in running bond. Ungrouted hollow masonry units are permitted except where otherwise indicated.

b. Soil classes are in accordance with the Unified Soil Classification System. Refer to Table R405.1.

c. Unbalanced backfill height is the difference in height between the exterior finish ground level and the lower of the top of the concrete footing that supports the foundation wall or the interior finish ground level. Where an interior concrete slab-on-grade is provided and is in contact with the interior surface of the foundation wall, measurement of the unbalanced backfill height from the exterior finish ground level to the top of the interior concrete slab is permitted.

d. Solid indicates solid masonry unit; grout indicates grouted hollow units.

e. Wall construction shall be in accordance with either Table R404.1.1(2), Table R404.1.1(3), Table R404.1.1(4), or a design shall be provided.

f. The use of this table shall be prohibited for soil classifications not shown.

TABLE R404.1.1(2)
8-INCH MASONRY FOUNDATION WALLS WITH REINFORCING WHERE d ≥ 5 INCHES[a, c, f]

WALL HEIGHT	HEIGHT OF UNBALANCED BACKFILL[e]	MINIMUM VERTICAL REINFORCEMENT AND SPACING (INCHES)[b, c]		
		Soil classes and lateral soil load[d] (psf per foot below grade)		
		GW, GP, SW and SP soils 30	GM, GC, SM, SM-SC and ML soils 45	SC, ML-CL and inorganic CL soils 60
6 feet 8 inches	4 feet (or less)	#4 at 48	#4 at 48	#4 at 48
	5 feet	#4 at 48	#4 at 48	#4 at 48
	6 feet 8 inches	#4 at 48	#5 at 48	#6 at 48
7 feet 4 inches	4 feet (or less)	#4 at 48	#4 at 48	#4 at 48
	5 feet	#4 at 48	#4 at 48	#4 at 48
	6 feet	#4 at 48	#5 at 48	#5 at 48
	7 feet 4 inches	#5 at 48	#6 at 48	#6 at 40
8 feet	4 feet (or less)	#4 at 48	#4 at 48	#4 at 48
	5 feet	#4 at 48	#4 at 48	#4 at 48
	6 feet	#4 at 48	#5 at 48	#5 at 48
	7 feet	#5 at 48	#6 at 48	#6 at 40
	8 feet	#5 at 48	#6 at 48	#6 at 32
8 feet 8 inches	4 feet (or less)	#4 at 48	#4 at 48	#4 at 48
	5 feet	#4 at 48	#4 at 48	#5 at 48
	6 feet	#4 at 48	#5 at 48	#6 at 48
	7 feet	#5 at 48	#6 at 48	#6 at 40
	8 feet 8 inches	#6 at 48	#6 at 32	#6 at 24
9 feet 4 inches	4 feet (or less)	#4 at 48	#4 at 48	#4 at 48
	5 feet	#4 at 48	#4 at 48	#5 at 48
	6 feet	#4 at 48	#5 at 48	#6 at 48
	7 feet	#5 at 48	#6 at 48	#6 at 40
	8 feet	#6 at 48	#6 at 40	#6 at 24
	9 feet 4 inches	#6 at 40	#6 at 24	#6 at 16
10 feet	4 feet (or less)	#4 at 48	#4 at 48	#4 at 48
	5 feet	#4 at 48	#4 at 48	#5 at 48
	6 feet	#4 at 48	#5 at 48	#6 at 48
	7 feet	#5 at 48	#6 at 48	#6 at 32
	8 feet	#6 at 48	#6 at 32	#6 at 24
	9 feet	#6 at 40	#6 at 24	#6 at 16
	10 feet	#6 at 32	#6 at 16	#6 at 16

For SI: 1 inch = 25.4 mm, 1 foot = 304.8 mm, 1 pound per square foot per foot = 0.157 kPa/mm.

a. Mortar shall be Type M or S and masonry shall be laid in running bond.

b. Alternative reinforcing bar sizes and spacings having an equivalent cross-sectional area of reinforcement per lineal foot of wall shall be permitted provided the spacing of the reinforcement does not exceed 72 inches in Seismic Design Categories A, B and C, and 48 inches in Seismic Design Categories D_0, D_1 and D_2.

c. Vertical reinforcement shall be Grade 60 minimum. The distance, *d*, from the face of the soil side of the wall to the center of vertical reinforcement shall be not less than 5 inches.

d. Soil classes are in accordance with the Unified Soil Classification System and design lateral soil loads are for moist conditions without hydrostatic pressure. Refer to Table R405.1.

e. Unbalanced backfill height is the difference in height between the exterior finish ground level and the lower of the top of the concrete footing that supports the foundation wall or the interior finish ground level. Where an interior concrete slab-on-grade is provided and is in contact with the interior surface of the foundation wall, measurement of the unbalanced backfill height from the exterior finish ground level to the top of the interior concrete slab is permitted.

f. The use of this table shall be prohibited for soil classifications not shown.

TABLE R404.1.1(3)
10-INCH MASONRY FOUNDATION WALLS WITH REINFORCING WHERE d ≥ 6.75 INCHES[a, c, f]

WALL HEIGHT	HEIGHT OF UNBALANCED BACKFILL[e]	MINIMUM VERTICAL REINFORCEMENT AND SPACING (INCHES)[b, c]		
		Soil classes and later soil load[d] (psf per foot below grade)		
		GW, GP, SW and SP soils 30	GM, GC, SM, SM-SC and ML soils 45	SC, ML-CL and inorganic CL soils 60
6 feet 8 inches	4 feet (or less)	#4 at 56	#4 at 56	#4 at 56
	5 feet	#4 at 56	#4 at 56	#4 at 56
	6 feet 8 inches	#4 at 56	#5 at 56	#5 at 56
7 feet 4 inches	4 feet (or less)	#4 at 56	#4 at 56	#4 at 56
	5 feet	#4 at 56	#4 at 56	#4 at 56
	6 feet	#4 at 56	#4 at 56	#5 at 56
	7 feet 4 inches	#4 at 56	#5 at 56	#6 at 56
8 feet	4 feet (or less)	#4 at 56	#4 at 56	#4 at 56
	5 feet	#4 at 56	#4 at 56	#4 at 56
	6 feet	#4 at 56	#4 at 56	#5 at 56
	7 feet	#4 at 56	#5 at 56	#6 at 56
	8 feet	#5 at 56	#6 at 56	#6 at 48
8 feet 8 inches	4 feet (or less)	#4 at 56	#4 at 56	#4 at 56
	5 feet	#4 at 56	#4 at 56	#4 at 56
	6 feet	#4 at 56	#4 at 56	#5 at 56
	7 feet	#4 at 56	#5 at 56	#6 at 56
	8 feet 8 inches	#5 at 56	#6 at 48	#6 at 32
9 feet 4 inches	4 feet (or less)	#4 at 56	#4 at 56	#4 at 56
	5 feet	#4 at 56	#4 at 56	#4 at 56
	6 feet	#4 at 56	#5 at 56	#5 at 56
	7 feet	#4 at 56	#5 at 56	#6 at 56
	8 feet	#5 at 56	#6 at 56	#6 at 40
	9 feet 4 inches	#6 at 56	#6 at 40	#6 at 24
10 feet	4 feet (or less)	#4 at 56	#4 at 56	#4 at 56
	5 feet	#4 at 56	#4 at 56	#4 at 56
	6 feet	#4 at 56	#5 at 56	#5 at 56
	7 feet	#5 at 56	#6 at 56	#6 at 48
	8 feet	#5 at 56	#6 at 48	#6 at 40
	9 feet	#6 at 56	#6 at 40	#6 at 24
	10 feet	#6 at 48	#6 at 32	#6 at 24

For SI: 1 inch = 25.4 mm, 1 foot = 304.8 mm, 1 pound per square foot per foot = 0.157 kPa/mm.

a. Mortar shall be Type M or S and masonry shall be laid in running bond.

b. Alternative reinforcing bar sizes and spacings having an equivalent cross-sectional area of reinforcement per lineal foot of wall shall be permitted provided the spacing of the reinforcement does not exceed 72 inches in Seismic Design Categories A, B and C, and 48 inches in Seismic Design Categories D_0, D_1 and D_2.

c. Vertical reinforcement shall be Grade 60 minimum. The distance, *d*, from the face of the soil side of the wall to the center of vertical reinforcement shall be not less than 6.75 inches.

d. Soil classes are in accordance with the Unified Soil Classification System and design lateral soil loads are for moist conditions without hydrostatic pressure. Refer to Table R405.1.

e. Unbalanced backfill height is the difference in height between the exterior finish ground level and the lower of the top of the concrete footing that supports the foundation wall or the interior finish ground level. Where an interior concrete slab-on-grade is provided and is in contact with the interior surface of the foundation wall, measurement of the unbalanced backfill height from the exterior finish ground level to the top of the interior concrete slab is permitted.

f. The use of this table shall be prohibited for soil classifications not shown.

TABLE R404.1.1(4)
12-INCH MASONRY FOUNDATION WALLS WITH REINFORCING WHERE d ≥ 8.75 INCHES[a, c, f]

WALL HEIGHT	HEIGHT OF UNBALANCED BACKFILL[e]	MINIMUM VERTICAL REINFORCEMENT AND SPACING (INCHES)[b, c]		
		Soil classes and lateral soil load[d] (psf per foot below grade)		
		GW, GP, SW and SP soils 30	GM, GC, SM, SM-SC and ML soils 45	SC, ML-CL and inorganic CL soils 60
6 feet 8 inches	4 feet (or less)	#4 at 72	#4 at 72	#4 at 72
	5 feet	#4 at 72	#4 at 72	#4 at 72
	6 feet 8 inches	#4 at 72	#4 at 72	#5 at 72
7 feet 4 inches	4 feet (or less)	#4 at 72	#4 at 72	#4 at 72
	5 feet	#4 at 72	#4 at 72	#4 at 72
	6 feet	#4 at 72	#4 at 72	#5 at 72
	7 feet 4 inches	#4 at 72	#5 at 72	#6 at 72
8 feet	4 feet (or less)	#4 at 72	#4 at 72	#4 at 72
	5 feet	#4 at 72	#4 at 72	#4 at 72
	6 feet	#4 at 72	#4 at 72	#5 at 72
	7 feet	#4 at 72	#5 at 72	#6 at 72
	8 feet	#5 at 72	#6 at 72	#6 at 64
8 feet 8 inches	4 feet (or less)	#4 at 72	#4 at 72	#4 at 72
	5 feet	#4 at 72	#4 at 72	#4 at 72
	6 feet	#4 at 72	#4 at 72	#5 at 72
	7 feet	#4 at 72	#5 at 72	#6 at 72
	8 feet 8 inches	#5 at 72	#7 at 72	#6 at 48
9 feet 4 inches	4 feet (or less)	#4 at 72	#4 at 72	#4 at 72
	5 feet	#4 at 72	#4 at 72	#4 at 72
	6 feet	#4 at 72	#5 at 72	#5 at 72
	7 feet	#4 at 72	#5 at 72	#6 at 72
	8 feet	#5 at 72	#6 at 72	#6 at 56
	9 feet 4 inches	#6 at 72	#6 at 48	#6 at 40
10 feet	4 feet (or less)	#4 at 72	#4 at 72	#4 at 72
	5 feet	#4 at 72	#4 at 72	#4 at 72
	6 feet	#4 at 72	#5 at 72	#5 at 72
	7 feet	#4 at 72	#6 at 72	#6 at 72
	8 feet	#5 at 72	#6 at 72	#6 at 48
	9 feet	#6 at 72	#6 at 56	#6 at 40
	10 feet	#6 at 64	#6 at 40	#6 at 32

For SI: 1 inch = 25.4 mm, 1 foot = 304.8 mm, 1 pound per square foot per foot = 0.157 kPa/mm.

a. Mortar shall be Type M or S and masonry shall be laid in running bond.

b. Alternative reinforcing bar sizes and spacings having an equivalent cross-sectional area of reinforcement per lineal foot of wall shall be permitted provided the spacing of the reinforcement does not exceed 72 inches in Seismic Design Categories A, B and C, and 48 inches in Seismic Design Categories D_0, D_1 and D_2.

c. Vertical reinforcement shall be Grade 60 minimum. The distance, *d*, from the face of the soil side of the wall to the center of vertical reinforcement shall be not less than 8.75 inches.

d. Soil classes are in accordance with the Unified Soil Classification System and design lateral soil loads are for moist conditions without hydrostatic pressure. Refer to Table R405.1.

e. Unbalanced backfill height is the difference in height between the exterior finish ground level and the lower of the top of the concrete footing that supports the foundation wall or the interior finish ground levels. Where an interior concrete slab-on-grade is provided and in contact with the interior surface of the foundation wall, measurement of the unbalanced backfill height is permitted to be measured from the exterior finish ground level to the top of the interior concrete slab is permitted.

f. The use of this table shall be prohibited for soil classifications not shown.

R404.1.3.1 Concrete cross-section. Concrete walls constructed in accordance with this code shall comply with the shapes and minimum concrete cross-sectional dimensions required by Table R608.3. Other types of forming systems resulting in concrete walls not in compliance with this section and Table R608.3 shall be designed in accordance with ACI 318.

R404.1.3.2 Reinforcement for foundation walls. Concrete foundation walls shall be laterally supported at the top and bottom. Horizontal reinforcement shall be provided in accordance with Table R404.1.2(1). Vertical reinforcement shall be provided in accordance with Table R404.1.2(2), R404.1.2(3), R404.1.2(4), R404.1.2(5), R404.1.2(6), R404.1.2(7) or R404.1.2(8). Vertical reinforcement for flat *basement* walls retaining 4 feet (1219 mm) or more of unbalanced backfill is permitted to be determined in accordance with Table R404.1.2(9). For *basement* walls supporting above-grade concrete walls, vertical reinforcement shall be the greater of that required by Tables R404.1.2(2) through R404.1.2(8) or by Section R608.6 for the above-grade wall. In buildings assigned to Seismic Design Category D_0, D_1 or D_2, concrete foundation walls shall also comply with Section R404.1.4.2.

R404.1.3.2.1 Concrete foundation stem walls supporting above-grade concrete walls. Foundation stem walls that support above-grade concrete walls shall be designed and constructed in accordance with this section.

1. Stem walls not laterally supported at top. Concrete stem walls that are not monolithic with slabs-on-ground or are not otherwise laterally supported by slabs-on-ground shall comply with this section. Where unbalanced backfill retained by the stem wall is less than or equal to 18 inches (457 mm), the stem wall and above-grade wall it supports shall be provided with vertical reinforcement in accordance with Section R608.6 and Table R608.6(1), R608.6(2) or R608.6(3) for above-grade walls. Where unbalanced backfill retained by the stem wall is greater than 18 inches (457 mm), the stem wall and above-grade wall it supports shall be provided with vertical reinforcement in accordance with Section R608.6 and Table R608.6(4).
2. Stem walls laterally supported at top. Concrete stem walls that are monolithic with slabs-on-ground or are otherwise laterally supported by slabs-on-ground shall be vertically reinforced in accordance with Section R608.6 and Table R608.6(1), R608.6(2) or R608.6(3) for above-grade walls. Where the unbalanced backfill retained by the stem wall is greater than 18 inches (457 mm), the connection between the stem wall and the slab-on-ground, and the portion of the slab-on-ground providing lateral support for the wall shall be designed in accordance with PCA 100 or with accepted engineering practice. Where the unbalanced backfill retained by the stem wall is greater than 18 inches (457 mm), the minimum nominal thickness of the wall shall be 6 inches (152 mm).

R404.1.3.2.2 Concrete foundation stem walls supporting light-frame above-grade walls. Concrete foundation stem walls that support light-frame above-grade walls shall be designed and constructed in accordance with this section.

1. Stem walls not laterally supported at top. Concrete stem walls that are not monolithic with slabs-on-ground or are not otherwise laterally supported by slabs-on-ground and retain 48 inches (1219 mm) or less of unbalanced fill, measured from the top of the wall, shall be constructed in accordance with Section R404.1.3. Foundation stem walls that retain more than 48 inches (1219 mm) of unbalanced fill, measured from the top of the wall, shall be designed in accordance with Sections R404.1.4 and R404.4.
2. Stem walls laterally supported at top. Concrete stem walls that are monolithic with slabs-on-ground or are otherwise laterally supported by slabs-on-ground shall be constructed in accordance with Section R404.1.3. Where the unbalanced backfill retained by the stem wall is greater than 48 inches (1219 mm), the connection between the stem wall and the slab-on-ground, and the portion of the slab-on-ground providing lateral support for the wall, shall be designed in accordance with PCA 100 or in accordance with accepted engineering practice.

TABLE R404.1.2(1)
MINIMUM HORIZONTAL REINFORCEMENT FOR CONCRETE BASEMENT WALLS[a, b]

MAXIMUM UNSUPPORTED HEIGHT OF BASEMENT WALL (feet)	LOCATION OF HORIZONTAL REINFORCEMENT
≤ 8	One No. 4 bar within 12 inches of the top of the wall story and one No. 4 bar near mid-height of the wall story.
> 8	One No. 4 bar within 12 inches of the top of the wall story and one No. 4 bar near third points in the wall story.

For SI: 1 inch = 25.4 mm, 1 foot = 304.8 mm, 1 pound per square inch = 6.895 kPa.

a. Horizontal reinforcement requirements are for reinforcing bars with a minimum yield strength of 40,000 psi and concrete with a minimum concrete compressive strength of 2,500 psi.

b. See Section R404.1.2.2 for minimum reinforcement required for foundation walls supporting above-grade concrete walls.

R404.1.3.3 Concrete, materials for concrete, and forms. Materials used in concrete, the concrete itself and forms shall conform to requirements of this section or ACI 318.

R404.1.3.3.1 Compressive strength. The minimum specified compressive strength of concrete, f'_c, shall comply with Section R402.2 and shall be not less than 2,500 psi (17.2 MPa) at 28 days in buildings assigned to Seismic Design Category A, B or C and 3000 psi (20.5 MPa) in buildings assigned to Seismic Design Category D_0, D_1 or D_2.

R404.1.3.3.2 Concrete mixing and delivery. Mixing and delivery of concrete shall comply with ASTM C 94 or ASTM C 685.

R404.1.3.3.3 Maximum aggregate size. The nominal maximum size of coarse aggregate shall not exceed one-fifth the narrowest distance between sides of forms, or three-fourths the clear spacing between reinforcing bars or between a bar and the side of the form.

Exception: When *approved*, these limitations shall not apply where removable forms are used and workability and methods of consolidation permit concrete to be placed without honeycombs or voids.

TABLE R404.1.2(2)
MINIMUM VERTICAL REINFORCEMENT FOR 6-INCH NOMINAL FLAT CONCRETE BASEMENT WALLS[b, c, d, e, g, h, i, j, k]

MAXIMUM UNSUPPORTED WALL HEIGHT (feet)	MAXIMUM UNBALANCED BACKFILL HEIGHT[f] (feet)	MINIMUM VERTICAL REINFORCEMENT-BAR SIZE AND SPACING (inches)		
		Soil classes[a] and design lateral soil (psf per foot of depth)		
		GW, GP, SW, SP 30	GM, GC, SM, SM-SC and ML 45	SC, ML-CL and inorganic CL 60
8	4	NR	NR	NR
	5	NR	6 @ 39	6 @ 48
	6	5 @ 39	6 @ 48	6 @ 35
	7	6 @ 48	6 @ 34	6 @ 25
	8	6 @ 39	6 @ 25	6 @ 18
9	4	NR	NR	NR
	5	NR	5 @ 37	6 @ 48
	6	5 @ 36	6 @ 44	6 @ 32
	7	6 @ 47	6 @ 30	6 @ 22
	8	6 @ 34	6 @ 22	6 @ 16
	9	6 @ 27	6 @ 17	DR
10	4	NR	NR	NR
	5	NR	5 @ 35	6 @ 48
	6	6 @ 48	6 @ 41	6 @ 30
	7	6 @ 43	6 @ 28	6 @ 20
	8	6 @ 31	6 @ 20	DR
	9	6 @ 24	6 @ 15	DR
	10	6 @ 19	DR	DR

For SI: 1 inch = 25.4 mm; 1 foot = 304.8 mm; 1 pound per square foot per foot = 0.1571 kPa^2/m, 1 pound per square inch = 6.895 kPa.

NR = Not required.

a. Soil classes are in accordance with the Unified Soil Classification System. Refer to Table R405.1.

b. Table values are based on reinforcing bars with a minimum yield strength of 60,000 psi concrete with a minimum specified compressive strength of 2,500 psi and vertical reinforcement being located at the centerline of the wall. See Section R404.1.3.3.7.2.

c. Vertical reinforcement with a yield strength of less than 60,000 psi and/or bars of a different size than specified in the table are permitted in accordance with Section R404.1.3.3.7.6 and Table R404.1.2(9).

d. Deflection criterion is $L/240$, where L is the height of the basement wall in inches.

e. Interpolation is not permitted.

f. Where walls will retain 4 feet or more of unbalanced backfill, they shall be laterally supported at the top and bottom before backfilling.

g. NR indicates no vertical wall reinforcement is required, except for 6-inch-nominal walls formed with stay-in-place forming systems in which case vertical reinforcement shall be No. 4@48 inches on center.

h. See Section R404.1.3.2 for minimum reinforcement required for basement walls supporting above-grade concrete walls.

i. See Table R608.3 for tolerance from nominal thickness permitted for flat walls.

j. DR means design is required in accordance with the applicable building code, or where there is no code, in accordance with ACI 318.

k. The use of this table shall be prohibited for soil classifications not shown.

R404.1.3.3.4 Proportioning and slump of concrete. Proportions of materials for concrete shall be established to provide workability and consistency to permit concrete to be worked readily into forms and around reinforcement under conditions of placement to be employed, without segregation or excessive bleeding. Slump of concrete placed in removable forms shall not exceed 6 inches (152 mm).

Exception: When *approved*, the slump is permitted to exceed 6 inches (152 mm) for concrete mixtures that are resistant to segregation, and are in accordance with the form manufacturer's recommendations.

Slump of concrete placed in stay-in-place forms shall exceed 6 inches (152 mm). Slump of concrete shall be determined in accordance with ASTM C 143.

R404.1.3.3.5 Consolidation of concrete. Concrete shall be consolidated by suitable means during placement and shall be worked around embedded items and reinforcement and into corners of forms. Where stay-in-place forms are used, concrete shall be consolidated by internal vibration.

Exception: When *approved* for concrete to be placed in stay-in-place forms, self-consolidating concrete mixtures with slumps equal to or greater than 8 inches (203 mm) that are specifically designed for placement without internal vibration need not be internally vibrated.

TABLE R404.1.2(3)
MINIMUM VERTICAL REINFORCEMENT FOR 8-INCH (203 mm) NOMINAL FLAT CONCRETE BASEMENT WALLS[b, c, d, e, f, h, i, j]

MAXIMUM UNSUPPORTED WALL HEIGHT (feet)	MAXIMUM UNBALANCED BACKFILL HEIGHT[g] (feet)	MINIMUM VERTICAL REINFORCEMENT-BAR SIZE AND SPACING (inches)		
		Soil classes[a] and design lateral soil (psf per foot of depth)		
		GW, GP, SW, SP 30	GM, GC, SM, SM-SC and ML 45	SC, ML-CL and inorganic CL 60
8	4	NR	NR	NR
	5	NR	NR	NR
	6	NR	NR	6 @ 37
	7	NR	6 @ 36	6 @ 35
	8	6 @ 41	6 @ 35	6 @ 26
9	4	NR	NR	NR
	5	NR	NR	NR
	6	NR	NR	6 @ 35
	7	NR	6 @ 35	6 @ 32
	8	6 @ 36	6 @ 32	6 @ 23
	9	6 @ 35	6 @ 25	6 @ 18
10	4	NR	NR	NR
	5	NR	NR	NR
	6	NR	NR	6 @ 35
	7	NR	6 @ 35	6 @ 29
	8	6 @ 35	6 @ 29	6 @ 21
	9	6 @ 34	6 @ 22	6 @ 16
	10	6 @ 27	6 @ 17	6 @ 13

For SI: 1 inch = 25.4 mm; 1 foot = 304.8 mm; 1 pound per square foot per foot = 0.1571 kPa^2/m, 1 pound per square inch = 6.895 kPa.

NR = Not required.

a. Soil classes are in accordance with the Unified Soil Classification System. Refer to Table R405.1.

b. Table values are based on reinforcing bars with a minimum yield strength of 60,000 psi, concrete with a minimum specified compressive strength of 2,500 psi and vertical reinforcement being located at the centerline of the wall. See Section R404.1.3.3.7.2.

c. Vertical reinforcement with a yield strength of less than 60,000 psi and/or bars of a different size than specified in the table are permitted in accordance with Section R404.1.3.3.7.6 and Table R404.1.2(9).

d. NR indicates no vertical reinforcement is required.

e. Deflection criterion is $L/240$, where L is the height of the basement wall in inches.

f. Interpolation is not permitted.

g. Where walls will retain 4 feet or more of unbalanced backfill, they shall be laterally supported at the top and bottom before backfilling.

h. See Section R404.1.3.2 for minimum reinforcement required for basement walls supporting above-grade concrete walls.

i. See Table R608.3 for tolerance from nominal thickness permitted for flat walls.

j. The use of this table shall be prohibited for soil classifications not shown.

R404.1.3.3.6 Form materials and form ties. Forms shall be made of wood, steel, aluminum, plastic, a composite of cement and foam insulation, a composite of cement and wood chips, or other *approved* material suitable for supporting and containing concrete. Forms shall provide sufficient strength to contain concrete during the concrete placement operation.

Form ties shall be steel, solid plastic, foam plastic, a composite of cement and wood chips, a composite of cement and foam plastic, or other suitable material capable of resisting the forces created by fluid pressure of fresh concrete.

R404.1.3.3.6.1 Stay-in-place forms. Stay-in-place concrete forms shall comply with this section.

1. Surface burning characteristics. The flame-spread index and smoke-developed index of forming material, other than foam plastic, left exposed on the interior shall comply with Section R302. The surface burning characteristics of foam plastic used in insulating concrete forms shall comply with Section R316.3.
2. Interior covering. Stay-in-place forms constructed of rigid foam plastic shall be protected on the interior of the building as required by Section R316. Where gypsum

TABLE R404.1.2(4)
MINIMUM VERTICAL REINFORCEMENT FOR 10-INCH NOMINAL FLAT CONCRETE BASEMENT WALLS[b, c, d, e, f, h, i, j]

MAXIMUM UNSUPPORTED WALL HEIGHT (feet)	MAXIMUM UNBALANCED BACKFILL HEIGHT[g] (feet)	MINIMUM VERTICAL REINFORCEMENT-BAR SIZE AND SPACING (inches)		
		Soil classes[a] and design lateral soil (psf per foot of depth)		
		GW, GP, SW, SP 30	GM, GC, SM, SM-SC and ML 45	SC, ML-CL and inorganic CL 60
8	4	NR	NR	NR
	5	NR	NR	NR
	6	NR	NR	NR
	7	NR	NR	NR
	8	6 @ 48	6 @ 35	6 @ 28
9	4	NR	NR	NR
	5	NR	NR	NR
	6	NR	NR	NR
	7	NR	NR	6 @ 31
	8	NR	6 @ 31	6 @ 28
	9	6 @ 37	6 @ 28	6 @ 24
10	4	NR	NR	NR
	5	NR	NR	NR
	6	NR	NR	NR
	7	NR	NR	6 @ 28
	8	NR	6 @ 28	6 @ 28
	9	6 @ 33	6 @ 28	6 @ 21
	10	6 @ 28	6 @ 23	6 @ 17

For SI: 1 inch = 25.4 mm; 1 foot = 304.8 mm; 1 pound per square foot per foot = 0.1571 kPa^2/m, 1 pound per square inch = 6.895 kPa.

NR = Not required.

a. Soil classes are in accordance with the Unified Soil Classification System. Refer to Table R405.1.

b. Table values are based on reinforcing bars with a minimum yield strength of 60,000 psi concrete with a minimum specified compressive strength of 2,500 psi and vertical reinforcement being located at the centerline of the wall. See Section R404.1.3.3.7.2.

c. Vertical reinforcement with a yield strength of less than 60,000 psi and/or bars of a different size than specified in the table are permitted in accordance with Section R404.1.3.3.7.6 and Table R404.1.2(9).

d. NR indicates no vertical reinforcement is required.

e. Deflection criterion is $L/240$, where L is the height of the basement wall in inches.

f. Interpolation is not permitted.

g. Where walls will retain 4 feet or more of unbalanced backfill, they shall be laterally supported at the top and bottom before backfilling.

h. See Section R404.1.3.2 for minimum reinforcement required for basement walls supporting above-grade concrete walls.

i. See Table R608.3 for tolerance from nominal thickness permitted for flat walls.

j. The use of this table shall be prohibited for soil classifications not shown.

board is used to protect the foam plastic, it shall be installed with a mechanical fastening system. Use of adhesives in addition to mechanical fasteners is permitted.

3. Exterior wall covering. Stay-in-place forms constructed of rigid foam plastics shall be protected from sunlight and physical damage by the application of an approved exterior wall covering complying with this code. Exterior surfaces of other stay-in-place forming systems shall be protected in accordance with this code.
4. Termite protection. In areas where the probability of termite infestation is "very heavy" as indicated by Table R301.2(1) or Figure R301.2(6), foam plastic insulation shall be permitted below grade on foundation walls in accordance with Section R318.4.
5. Flat ICF wall system forms shall conform to ASTM E 2634.

TABLE R404.1.2(5)
MINIMUM VERTICAL WALL REINFORCEMENT FOR 6-INCH WAFFLE-GRID BASEMENT WALLS[b, c, d, e, g, h, i, j]

MAXIMUM UNSUPPORTED WALL HEIGHT (feet)	MAXIMUM UNBALANCED BACKFILL HEIGHT[f] (feet)	MINIMUM VERTICAL REINFORCEMENT-BAR SIZE AND SPACING (inches)		
		Soil classes[a] and design lateral soil (psf per foot of depth)		
		GW, GP, SW, SP 30	GM, GC, SM, SM-SC and ML 45	SC, ML-CL and inorganic CL 60
8	4	4 @ 48	4 @ 46	6 @ 39
	5	4 @ 45	5 @ 46	6 @ 47
	6	5 @ 45	6 @ 40	DR
	7	6 @ 44	DR	DR
	8	6 @ 32	DR	DR
9	4	4 @ 48	4 @ 46	4 @ 37
	5	4 @ 42	5 @ 43	6 @ 44
	6	5 @ 41	6 @ 37	DR
	7	6 @ 39	DR	DR
	> 8	DR[i]	DR	DR
10	4	4 @ 48	4 @ 46	4 @ 35
	5	4 @ 40	5 @ 40	6 @ 41
	6	5 @ 38	6 @ 34	DR
	7	6 @ 36	DR	DR
	> 8	DR	DR	DR

For SI: 1 inch = 25.4 mm; 1 foot = 304.8 mm; 1 pound per square foot per foot = 0.1571 kPa^2/m, 1 pound per square inch = 6.895 kPa.

a. Soil classes are in accordance with the Unified Soil Classification System. Refer to Table R405.1.

b. Table values are based on reinforcing bars with a minimum yield strength of 60,000 psi concrete with a minimum specified compressive strength of 2,500 psi and vertical reinforcement being located at the centerline of the wall. See Section R404.1.3.3.7.2.

c. Maximum spacings shown are the values calculated for the specified bar size. Where the bar used is Grade 60 and the size specified in the table, the actual spacing in the wall shall not exceed a whole-number multiple of 12 inches (i.e., 12, 24, 36 and 48) that is less than or equal to the tabulated spacing. Vertical reinforcement with a yield strength of less than 60,000 psi and/or bars of a different size than specified in the table are permitted in accordance with Section R404.1.3.3.7.6 and Table R404.1.2(9).

d. Deflection criterion is $L/240$, where L is the height of the basement wall in inches.

e. Interpolation is not permitted.

f. Where walls will retain 4 feet or more of unbalanced backfill, they shall be laterally supported at the top and bottom before backfilling.

g. See Section R404.1.3.2 for minimum reinforcement required for basement walls supporting above-grade concrete walls.

h. See Table R608.3 for thicknesses and dimensions of waffle-grid walls.

i. DR means design is required in accordance with the applicable building code, or where there is no code, in accordance with ACI 318.

j. The use of this table shall be prohibited for soil classifications not shown.

R404.1.3.3.7 Reinforcement.

R404.1.3.3.7.1 Steel reinforcement. Steel reinforcement shall comply with the requirements of ASTM A 615, A 706, or A 996. ASTM A 996 bars produced from rail steel shall be Type R. In buildings assigned to Seismic Design Category A, B or C, the minimum yield strength of reinforcing steel shall be 40,000 psi (Grade 40) (276 MPa). In buildings assigned to Seismic Design Category D_0, D_1 or D_2, reinforcing steel shall comply with the requirements of ASTM A 706 for low-alloy steel with a minimum yield strength of 60,000 psi (Grade 60) (414 MPa).

R404.1.3.3.7.2 Location of reinforcement in wall. The center of vertical reinforcement in *basement* walls determined from Tables R404.1.2(2) through R404.1.2(7) shall be located at the centerline of the wall. Vertical reinforcement in *basement* walls determined from Table R404.1.2(8) shall be located to provide a maximum cover of $1^1/_4$ inches (32 mm) measured from the inside face of the wall. Regardless of the table used to determine vertical wall reinforcement, the center of the steel shall not vary from the specified location by more than the greater of 10 percent of the wall thickness and $^3/_8$ inch (10 mm). Horizontal and vertical reinforcement shall be located in foundation walls to provide the minimum cover required by Section R404.1.3.3.7.4.

TABLE R404.1.2(6)
MINIMUM VERTICAL REINFORCEMENT FOR 8-INCH WAFFLE-GRID BASEMENT WALLS[b, c, d, e, f, h, i, j, k]

MAXIMUM UNSUPPORTED WALL HEIGHT (feet)	MAXIMUM UNBALANCED BACKFILL HEIGHT[g] (feet)	MINIMUM VERTICAL REINFORCEMENT-BAR SIZE AND SPACING (inches)		
		Soil classes[a] and design lateral soil (psf per foot of depth)		
		GW, GP, SW, SP 30	GM, GC, SM, SM-SC and ML 45	SC, ML-CL and inorganic CL 60
8	4	NR	NR	NR
	5	NR	5 @ 48	5 @ 46
	6	5 @ 48	5 @ 43	6 @ 45
	7	5 @ 46	6 @ 43	6 @ 31
	8	6 @ 48	6 @ 32	6 @ 23
9	4	NR	NR	NR
	5	NR	5 @ 47	5 @ 46
	6	5 @ 46	5 @ 39	6 @ 41
	7	5 @ 42	6 @ 38	6 @ 28
	8	6 @ 44	6 @ 28	6 @ 20
	9	6 @ 34	6 @ 21	DR
10	4	NR	NR	NR
	5	NR	5 @ 46	5 @ 44
	6	5 @ 46	5 @ 37	6 @ 38
	7	5 @ 38	6 @ 35	6 @ 25
	8	6 @ 39	6 @ 25	DR
	9	6 @ 30	DR	DR
	10	6 @ 24	DR	DR

For SI: 1 inch = 25.4 mm; 1 foot = 304.8 mm; 1 pound per square foot per foot = 0.1571 kPa^2/m, 1 pound per square inch = 6.895 kPa.

NR = Not required.

a. Soil classes are in accordance with the Unified Soil Classification System. Refer to Table R405.1.

b. Table values are based on reinforcing bars with a minimum yield strength of 60,000 psi concrete with a minimum specified compressive strength of 2,500 psi and vertical reinforcement being located at the centerline of the wall. See Section R404.1.3.3.7.2.

c. Maximum spacings shown are the values calculated for the specified bar size. Where the bar used is Grade 60 (420 MPa) and the size specified in the table, the actual spacing in the wall shall not exceed a whole-number multiple of 12 inches (i.e., 12, 24, 36 and 48) that is less than or equal to the tabulated spacing. Vertical reinforcement with a yield strength of less than 60,000 psi and/or bars of a different size than specified in the table are permitted in accordance with Section R404.1.3.3.7.6 and Table R404.1.2(9).

d. NR indicates no vertical reinforcement is required.

e. Deflection criterion is $L/240$, where L is the height of the basement wall in inches.

f. Interpolation shall not be permitted.

g. Where walls will retain 4 feet or more of unbalanced backfill, they shall be laterally supported at the top and bottom before backfilling.

h. See Section R404.1.3.2 for minimum reinforcement required for basement walls supporting above-grade concrete walls.

i. See Table R608.3 for thicknesses and dimensions of waffle-grid walls.

j. DR means design is required in accordance with the applicable building code, or where there is no code, in accordance with ACI 318.

k. The use of this table shall be prohibited for soil classifications not shown.

2577

R404.1.3.3.7.3 Wall openings. Vertical wall reinforcement required by Section R404.1.3.2 that is interrupted by wall openings shall have additional vertical reinforcement of the same size placed within 12 inches (305 mm) of each side of the opening.

R404.1.3.3.7.4 Support and cover. Reinforcement shall be secured in the proper location in the forms with tie wire or other bar support system to prevent displacement during the concrete placement operation. Steel reinforcement in concrete cast against the earth shall have a minimum cover of 3 inches (75 mm). Minimum cover for reinforcement in concrete cast in removable forms that will be exposed to the earth or weather shall be $1^1/_2$ inches (38 mm) for No. 5 bars and smaller, and 2 inches (50 mm) for No. 6 bars and larger. For concrete cast in removable forms that will not be exposed to the earth or weather, and for concrete cast in stay-in-place forms, minimum cover shall be $^3/_4$ inch (19 mm). The minus tolerance for cover shall not exceed the smaller of one-third the required cover or $^3/_8$ inch (10 mm).

R404.1.3.3.7.5 Lap splices. Vertical and horizontal wall reinforcement shall be the longest lengths practical. Where splices are necessary in reinforcement, the length of lap splice shall be in accordance with Table R608.5.4.(1) and Figure R608.5.4(1). The maximum gap between noncontact parallel bars at a lap splice shall not exceed the smaller of one-fifth the required lap length and 6 inches (152 mm) [See Figure R608.5.4(1)].

TABLE R404.1.2(7)
MINIMUM VERTICAL REINFORCEMENT FOR 6-INCH (152 mm) SCREEN-GRID BASEMENT WALLS[b, c, d, e, g, h, i, j]

MAXIMUM UNSUPPORTED WALL HEIGHT (feet)	MAXIMUM UNBALANCED BACKFILL HEIGHT[f] (feet)	MINIMUM VERTICAL REINFORCEMENT-BAR SIZE AND SPACING (inches)		
		Soil classes[a] and design lateral soil (psf per foot of depth)		
		GW, GP, SW, SP 30	GM, GC, SM, SM-SC and ML 45	SC, ML-CL and inorganic CL 60
8	4	4 @ 48	4 @ 48	5 @ 43
	5	4 @ 48	5 @ 48	5 @ 37
	6	5 @ 48	6 @ 45	6 @ 32
	7	6 @ 48	DR	DR
	8	6 @ 36	DR	DR
9	4	4 @ 48	4 @ 48	4 @ 41
	5	4 @ 48	5 @ 48	6 @ 48
	6	5 @ 45	6 @ 41	DR
	7	6 @ 43	DR	DR
	> 8	DR	DR	DR
10	4	4 @ 48	4 @ 48	4 @ 39
	5	4 @ 44	5 @ 44	6 @ 46
	6	5 @ 42	6 @ 38	DR
	7	6 @ 40	DR	DR
	> 8	DR	DR	DR

For SI: 1 inch = 25.4 mm; 1 foot = 304.8 mm; 1 pound per square foot per foot = 0.1571 kPa²/m, 1 pound per square inch = 6.895 kPa.

a. Soil classes are in accordance with the Unified Soil Classification System. Refer to Table R405.1.

b. Table values are based on reinforcing bars with a minimum yield strength of 60,000 psi, concrete with a minimum specified compressive strength of 2,500 psi and vertical reinforcement being located at the centerline of the wall. See Section R404.1.3.3.7.2.

c. Maximum spacings shown are the values calculated for the specified bar size. Where the bar used is Grade 60 and the size specified in the table, the actual spacing in the wall shall not exceed a whole-number multiple of 12 inches (i.e., 12, 24, 36 and 48) that is less than or equal to the tabulated spacing. Vertical reinforcement with a yield strength of less than 60,000 psi and/or bars of a different size than specified in the table are permitted in accordance with Section R404.1.3.3.7.6 and Table R404.1.2(9).

d. Deflection criterion is $L/240$, where L is the height of the basement wall in inches.

e. Interpolation is not permitted.

f. Where walls will retain 4 feet or more of unbalanced backfill, they shall be laterally supported at the top and bottom before backfilling.

g. See Sections R404.1.3.2 for minimum reinforcement required for basement walls supporting above-grade concrete walls.

h. See Table R608.3 for thicknesses and dimensions of screen-grid walls.

i. DR means design is required in accordance with the applicable building code, or where there is no code, in accordance with ACI 318.

j. The use of this table shall be prohibited for soil classifications not shown.

TABLE R404.1.2(8)
MINIMUM VERTICAL REINFORCEMENT FOR 6-, 8-, 10- AND 12-INCH NOMINAL FLAT BASEMENT WALLS[b, c, d, e, f, h, l, k, n, o]

MAXIMUM WALL HEIGHT (feet)	MAXIMUM UNBALANCED BACKFILL HEIGHT[g] (feet)	MINIMUM VERTICAL REINFORCEMENT-BAR SIZE AND SPACING (inches)											
		Soil classes[a] and design lateral soil (psf per foot of depth)											
		GW, GP, SW, SP 30				GM, GC, SM, SM-SC and ML 45				SC, ML-CL and inorganic CL 60			
		Minimum nominal wall thickness (inches)											
		6	8	10	12	6	8	10	12	6	8	10	12
5	4	NR	NR	NR	NR	NR	NR	NR	NR	NR	NR	NR	NR
	5	NR	NR	NR	NR	NR	NR	NR	NR	NR	NR	NR	NR
6	4	NR	NR	NR	NR	NR	NR	NR	NR	NR	NR	NR	NR
	5	NR	NR	NR	NR	NR	NR[1]	NR	NR	4 @ 35	NR[1]	NR	NR
	6	NR	NR	NR	NR	5 @ 48	NR	NR	NR	5 @ 36	NR	NR	NR
7	4	NR	NR	NR	NR	NR	NR	NR	NR	NR	NR	NR	NR
	5	NR	NR	NR	NR	NR	NR	NR	NR	5 @ 47	NR	NR	NR
	6	NR	NR	NR	NR	5 @ 42	NR	NR	NR	6 @ 43	5 @ 48	NR[1]	NR
	7	5 @ 46	NR	NR	NR	6 @ 42	5 @ 46	NR[1]	NR	6 @ 34	6 @ 48	NR	NR
8	4	NR	NR	NR	NR	NR	NR	NR	NR	NR	NR	NR	NR
	5	NR	NR	NR	NR	4 @ 38	NR[1]	NR	NR	5 @ 43	NR	NR	NR
	6	4 @ 37	NR[1]	NR	NR	5 @ 37	NR	NR	NR	6 @ 37	5 @ 43	NR[1]	NR
	7	5 @ 40	NR	NR	NR	6 @ 37	5 @ 41	NR[1]	NR	6 @ 34	6 @ 43	NR	NR
	8	6 @ 43	5 @ 47	NR[1]	NR	6 @ 34	6 @ 43	NR	NR	6 @ 27	6 @ 32	6 @ 44	NR
9	4	NR	NR	NR	NR	NR	NR	NR	NR	NR	NR	NR	NR
	5	NR	NR	NR	NR	4 @ 35	NR[1]	NR	NR	5 @ 40	NR	NR	NR
	6	4 @ 34	NR[1]	NR	NR	6 @ 48	NR	NR	NR	6 @ 36	6 @ 39	NR[1]	NR
	7	5 @ 36	NR	NR	NR	6 @ 34	5 @ 37	NR	NR	6 @ 33	6 @ 38	5 @ 37	NR[1]
	8	6 @ 38	5 @ 41	NR[1]	NR	6 @ 33	6 @ 38	5 @ 37	NR[1]	6 @ 24	6 @ 29	6 @ 39	4 @ 48[m]
	9	6 @ 34	6 @ 46	NR	NR	6 @ 26	6 @ 30	6 @ 41	NR	6 @ 19	6 @ 23	6 @ 30	6 @ 39
10	4	NR	NR	NR	NR	NR	NR	NR	NR	NR	NR	NR	NR
	5	NR	NR	NR	NR	4 @ 33	NR[1]	NR	NR	5 @ 38	NR	NR	NR
	6	5 @ 48	NR[1]	NR	NR	6 @ 45	NR	NR	NR	6 @ 34	5 @ 37	NR	NR
	7	6 @ 47	NR	NR	NR	6 @ 34	6 @ 48	NR	NR	6 @ 30	6 @ 35	6 @ 48	NR[1]
	8	6 @ 34	5 @ 38	NR	NR	6 @ 30	6 @ 34	6 @ 47	NR[1]	6 @ 22	6 @ 26	6 @ 35	6 @ 45[m]
	9	6 @ 34	6 @ 41	4 @ 48	NR[1]	6 @ 23	6 @ 27	6 @ 35	4 @ 48[m]	DR	6 @ 22	6 @ 27	6 @ 34
	10	6 @ 28	6 @ 33	6 @ 45	NR	DR[j]	6 @ 23	6 @ 29	6 @ 38	DR	6 @ 22	6 @ 22	6 @ 28

For SI: 1 inch = 25.4 mm; 1 foot = 304.8 mm; 1 pound per square foot per foot = 0.1571 kPa^2/m, 1 pound per square inch = 6.895 kPa.

NR = Not required.

a. Soil classes are in accordance with the Unified Soil Classification System. Refer to Table R405.1.

b. Table values are based on reinforcing bars with a minimum yield strength of 60,000 psi.

c. Vertical reinforcement with a yield strength of less than 60,000 psi and/or bars of a different size than specified in the table are permitted in accordance with Section R404.1.3.3.7.6 and Table R404.1.2(9).

d. NR indicates no vertical wall reinforcement is required, except for 6-inch nominal walls formed with stay-in-place forming systems in which case vertical reinforcement shall be No. 4@48 inches on center.

e. Allowable deflection criterion is $L/240$, where L is the unsupported height of the basement wall in inches.

f. Interpolation is not permitted.

g. Where walls will retain 4 feet or more of unbalanced backfill, they shall be laterally supported at the top and bottom before backfilling.

h. Vertical reinforcement shall be located to provide a cover of $1^1/_4$ inches measured from the inside face of the wall. The center of the steel shall not vary from the specified location by more than the greater of 10 percent of the wall thickness or $^3/_8$ inch.

i. Concrete cover for reinforcement measured from the inside face of the wall shall be not less than $^3/_4$ inch. Concrete cover for reinforcement measured from the outside face of the wall shall be not less than $1^1/_2$ inches for No. 5 bars and smaller, and not less than 2 inches for larger bars.

j. DR means design is required in accordance with the applicable building code, or where there is no code, in accordance with ACI 318.

k. Concrete shall have a specified compressive strength, f'_c, of not less than 2,500 psi at 28 days, unless a higher strength is required by Footnote l or m.

l. The minimum thickness is permitted to be reduced 2 inches, provided the minimum specified compressive strength of concrete, f'_c, is 4,000 psi.

m. A plain concrete wall with a minimum nominal thickness of 12 inches is permitted, provided minimum specified compressive strength of concrete, f'_c, is 3,500 psi.

n. See Table R608.3 for tolerance from nominal thickness permitted for flat walls.

o. The use of this table shall be prohibited for soil classifications not shown.

TABLE R404.1.2(9)
MINIMUM SPACING FOR ALTERNATE BAR SIZE AND/OR ALTERNATE GRADE OF STEEL[a, b, c]

BAR SPACING FROM APPLICABLE TABLE IN SECTION R404.1.3.2 (inches)	BAR SIZE FROM APPLICABLE TABLE IN SECTION R404.1.3.2														
	#4					#5					#6				
	Alternate bar size and/or alternate grade of steel desired														
	Grade 60		Grade 40			Grade 60		Grade 40			Grade 60		Grade 40		
	#5	#6	#4	#5	#6	#4	#6	#4	#5	#6	#4	#5	#4	#5	#6
	Maximum spacing for alternate bar size and/or alternate grade of steel (inches)														
8	12	18	5	8	12	5	11	3	5	8	4	6	2	4	5
9	14	20	6	9	13	6	13	4	6	9	4	6	3	4	6
10	16	22	7	10	15	6	14	4	7	9	5	7	3	5	7
11	17	24	7	11	16	7	16	5	7	10	5	8	3	5	7
12	19	26	8	12	18	8	17	5	8	11	5	8	4	6	8
13	20	29	9	13	19	8	18	6	9	12	6	9	4	6	9
14	22	31	9	14	21	9	20	6	9	13	6	10	4	7	9
15	23	33	10	16	22	10	21	6	10	14	7	11	5	7	10
16	25	35	11	17	23	10	23	7	11	15	7	11	5	8	11
17	26	37	11	18	25	11	24	7	11	16	8	12	5	8	11
18	28	40	12	19	26	12	26	8	12	17	8	13	5	8	12
19	29	42	13	20	28	12	27	8	13	18	9	13	6	9	13
20	31	44	13	21	29	13	28	9	13	19	9	14	6	9	13
21	33	46	14	22	31	14	30	9	14	20	10	15	6	10	14
22	34	48	15	23	32	14	31	9	15	21	10	16	7	10	15
23	36	48	15	24	34	15	33	10	15	22	10	16	7	11	15
24	37	48	16	25	35	15	34	10	16	23	11	17	7	11	16
25	39	48	17	26	37	16	35	11	17	24	11	18	8	12	17
26	40	48	17	27	38	17	37	11	17	25	12	18	8	12	17
27	42	48	18	28	40	17	38	12	18	26	12	19	8	13	18
28	43	48	19	29	41	18	40	12	19	26	13	20	8	13	19
29	45	48	19	30	43	19	41	12	19	27	13	20	9	14	19
30	47	48	20	31	44	19	43	13	20	28	14	21	9	14	20
31	48	48	21	32	45	20	44	13	21	29	14	22	9	15	21
32	48	48	21	33	47	21	45	14	21	30	15	23	10	15	21
33	48	48	22	34	48	21	47	14	22	31	15	23	10	16	22
34	48	48	23	35	48	22	48	15	23	32	15	24	10	16	23
35	48	48	23	36	48	23	48	15	23	33	16	25	11	16	23
36	48	48	24	37	48	23	48	15	24	34	16	25	11	17	24
37	48	48	25	38	48	24	48	16	25	35	17	26	11	17	25
38	48	48	25	39	48	25	48	16	25	36	17	27	12	18	25
39	48	48	26	40	48	25	48	17	26	37	18	27	12	18	26
40	48	48	27	41	48	26	48	17	27	38	18	28	12	19	27
41	48	48	27	42	48	26	48	18	27	39	19	29	12	19	27
42	48	48	28	43	48	27	48	18	28	40	19	30	13	20	28
43	48	48	29	44	48	28	48	18	29	41	20	30	13	20	29
44	48	48	29	45	48	28	48	19	29	42	20	31	13	21	29
45	48	48	30	47	48	29	48	19	30	43	20	32	14	21	30
46	48	48	31	48	48	30	48	20	31	44	21	32	14	22	31
47	48	48	31	48	48	30	48	20	31	44	21	33	14	22	31
48	48	48	32	48	48	31	48	21	32	45	22	34	15	23	32

For SI: 1 inch = 25.4 mm, 1 pound per square inch = 6.895 kPa.

a. This table is for use with tables in Section R404.1.3.2 that specify the minimum bar size and maximum spacing of vertical wall reinforcement for foundation walls and above-grade walls. Reinforcement specified in tables in Section R404.1.3.2 is based on Grade 60 steel reinforcement.

b. Bar spacing shall not exceed 48 inches on center and shall be not less than one-half the nominal wall thickness.

c. For Grade 50 steel bars (ASTM A 996, Type R), use spacing for Grade 40 bars or interpolate between Grades 40 and 60.

R404.1.3.3.7.6 Alternate grade of reinforcement and spacing. Where tables in Section R404.1.3.2 specify vertical wall reinforcement based on minimum bar size and maximum spacing, which are based on Grade 60 (414 MPa) steel reinforcement, different size bars or bars made from a different grade of steel are permitted provided an equivalent area of steel per linear foot of wall is provided. Use of Table R404.1.2(9) is permitted to determine the maximum bar spacing for different bar sizes than specified in the tables or bars made from a different grade of steel. Bars shall not be spaced less than one-half the wall thickness, or more than 48 inches (1219 mm) on center.

R404.1.3.3.7.7 Standard hooks. Where reinforcement is required by this code to terminate with a standard hook, the hook shall comply with Section R608.5.4.5 and Figure R608.5.4(3).

R404.1.3.3.7.8 Construction joint reinforcement. Construction joints in foundation walls shall be made and located to not impair the strength of the wall. Construction joints in plain concrete walls, including walls required to have not less than No. 4 bars at 48 inches (1219 mm) on center by Sections R404.1.3.2 and R404.1.4.2, shall be located at points of lateral support, and a minimum of one No. 4 bar shall extend across the construction joint at a spacing not to exceed 24 inches (610 mm) on center. Construction joint reinforcement shall have a minimum of 12 inches (305 mm) embedment on both sides of the joint. Construction joints in reinforced concrete walls shall be located in the middle third of the span between lateral supports, or located and constructed as required for joints in plain concrete walls.

Exception: Use of vertical wall reinforcement required by this code is permitted in lieu of construction joint reinforcement provided the spacing does not exceed 24 inches (610 mm), or the combination of wall reinforcement and No.4 bars described above does not exceed 24 inches (610 mm).

R404.1.3.3.8 Exterior wall coverings. Requirements for installation of masonry veneer, stucco and other wall coverings on the exterior of concrete walls and other construction details not covered in this section shall comply with the requirements of this code.

R404.1.3.4 Requirements for Seismic Design Category C. Concrete foundation walls supporting above-grade concrete walls in townhouses assigned to Seismic Design Category C shall comply with ACI 318, ACI 332 or PCA 100 (see Section R404.1.3).

R404.1.4 Seismic Design Category D_0, D_1 or D_2.

R404.1.4.1 Masonry foundation walls. In buildings assigned to Seismic Design Category D_0, D_1 or D_2, as established in Table R301.2(1), masonry foundation walls shall comply with this section. In addition to the requirements of Table R404.1.1(1), plain masonry foundation walls shall comply with the following:

1. Wall height shall not exceed 8 feet (2438 mm).
2. Unbalanced backfill height shall not exceed 4 feet (1219 mm).
3. Minimum nominal thickness for plain masonry foundation walls shall be 8 inches (203 mm).
4. Masonry stem walls shall have a minimum vertical reinforcement of one No. 4 (No. 13) bar located a maximum of 4 feet (1219 mm) on center in grouted cells. Vertical reinforcement shall be tied to the horizontal reinforcement in the footings.

Foundation walls, supporting more than 4 feet (1219 mm) of unbalanced backfill or exceeding 8 feet (2438 mm) in height shall be constructed in accordance with Table R404.1.1(2), R404.1.1(3) or R404.1.1(4). Masonry foundation walls shall have two No. 4 (No. 13) horizontal bars located in the upper 12 inches (305 mm) of the wall.

R404.1.4.2 Concrete foundation walls. In buildings assigned to Seismic Design Category D_0, D_1 or D_2, as established in Table R301.2(1), concrete foundation walls that support light-frame walls shall comply with this section, and concrete foundation walls that support above-grade concrete walls shall comply with ACI 318, ACI 332 or PCA 100 (see Section R404.1.3). In addition to the horizontal reinforcement required by Table R404.1.2(1), plain concrete walls supporting light-frame walls shall comply with the following.

1. Wall height shall not exceed 8 feet (2438 mm).
2. Unbalanced backfill height shall not exceed 4 feet (1219 mm).
3. Minimum thickness for plain concrete foundation walls shall be 7.5 inches (191 mm) except that 6 inches (152 mm) is permitted where the maximum wall height is 4 feet, 6 inches (1372 mm).

Foundation walls less than 7.5 inches (191 mm) in thickness, supporting more than 4 feet (1219 mm) of unbalanced backfill or exceeding 8 feet (2438 mm) in height shall be provided with horizontal reinforcement in accordance with Table R404.1.2(1), and vertical reinforcement in accordance with Table R404.1.2(2), R404.1.2(3), R404.1.2(4), R404.1.2(5), R404.1.2(6), R404.1.2(7) or R404.1.2(8). Where Tables R404.1.2(2) through R404.1.2(8) permit plain concrete walls, not less than No. 4 (No. 13) vertical bars at a spacing not exceeding 48 inches (1219 mm) shall be provided.

R404.1.5 Foundation wall thickness based on walls supported. The thickness of masonry or concrete foundation walls shall be not less than that required by Section R404.1.5.1 or R404.1.5.2, respectively.

R404.1.5.1 Masonry wall thickness. Masonry foundation walls shall be not bless than the thickness of the wall supported, except that masonry foundation walls

2581

of at least 8-inch (203 mm) nominal thickness shall be permitted under brick veneered frame walls and under 10-inch-wide (254 mm) cavity walls where the total height of the wall supported, including gables, is not more than 20 feet (6096 mm), provided the requirements of Section R404.1.1 are met.

R404.1.5.2 Concrete wall thickness. The thickness of concrete foundation walls shall be equal to or greater than the thickness of the wall in the *story* above. Concrete foundation walls with corbels, brackets or other projections built into the wall for support of masonry veneer or other purposes are not within the scope of the tables in this section.

Where a concrete foundation wall is reduced in thickness to provide a shelf for the support of masonry veneer, the reduced thickness shall be equal to or greater than the thickness of the wall in the *story* above. Vertical reinforcement for the foundation wall shall be based on Table R404.1.2(8) and located in the wall as required by Section R404.1.3.3.7.2 where that table is used. Vertical reinforcement shall be based on the thickness of the thinner portion of the wall.

Exception: Where the height of the reduced thickness portion measured to the underside of the floor assembly or sill plate above is less than or equal to 24 inches (610 mm) and the reduction in thickness does not exceed 4 inches (102 mm), the vertical reinforcement is permitted to be based on the thicker portion of the wall.

R404.1.5.3 Pier and curtain wall foundations. Use of pier and curtain wall foundations shall be permitted to support light-frame construction not more than two stories in height, provided the following requirements are met:

1. All load-bearing walls shall be placed on continuous concrete footings placed integrally with the exterior wall footings.
2. The minimum actual thickness of a load-bearing masonry wall shall be not less than 4 inches (102 mm) nominal or $3^3/_8$ inches (92 mm) actual thickness, and shall be bonded integrally with piers spaced in accordance with Section R606.6.4.
3. Piers shall be constructed in accordance with Sections R606.7 and R606.7.1, and shall be bonded into the load-bearing masonry wall in accordance with Section R606.13.1 or R606.13.1.1.
4. The maximum height of a 4-inch (102 mm) load-bearing masonry foundation wall supporting wood-frame walls and floors shall be not more than 4 feet (1219 mm).
5. Anchorage shall be in accordance with Section R403.1.6, Figure R404.1.5(1), or as specified by engineered design accepted by the *building official.*
6. The unbalanced fill for 4-inch (102 mm) foundation walls shall not exceed 24 inches (610 mm) for solid masonry or 12 inches (305 mm) for hollow masonry.
7. In Seismic Design Categories D_0, D_1 and D_2, prescriptive reinforcement shall be provided in the horizontal and vertical direction. Provide minimum horizontal joint reinforcement of two No. 9 gage wires spaced not less than 6 inches (152 mm) or one $^1/_4$-inch-diameter (6.4 mm) wire at 10 inches (254 mm) on center vertically. Provide minimum vertical reinforcement of one No. 4 bar at 48 inches (1220 mm) on center horizontally grouted in place.

R404.1.6 Height above finished grade. Concrete and masonry foundation walls shall extend above the finished *grade* adjacent to the foundation at all points a minimum of 4 inches (102 mm) where masonry veneer is used and a minimum of 6 inches (152 mm) elsewhere.

R404.1.7 Backfill placement. Backfill shall not be placed against the wall until the wall has sufficient strength and has been anchored to the floor above, or has been sufficiently braced to prevent damage by the backfill.

Exception: Bracing is not required for walls supporting less than 4 feet (1219 mm) of unbalanced backfill.

R404.1.8 Rubble stone masonry. Rubble stone masonry foundation walls shall have a minimum thickness of 16 inches (406 mm), shall not support an unbalanced backfill exceeding 8 feet (2438 mm) in height, shall not support a soil pressure greater than 30 pounds per square foot per foot (4.71 kPa/m), and shall not be constructed in Seismic Design Categories D_0, D_1, D_2 or townhouses in Seismic Design Category C, as established in Figure R301.2(2).

R404.1.9 Isolated masonry piers. Isolated masonry piers shall be constructed in accordance with this section and the general masonry construction requirements of Section R606. Hollow masonry piers shall have a minimum nominal thickness of 8 inches (203 mm), with a nominal height not exceeding four times the nominal thickness and a nominal length not exceeding three times the nominal thickness. Where hollow masonry units are solidly filled with concrete or grout, piers shall be permitted to have a nominal height not exceeding ten times the nominal thickness. Footings for isolated masonry piers shall be sized in accordance with Section R403.1.1.

R404.1.9.1 Pier cap. Hollow masonry piers shall be capped with 4 inches (102 mm) of solid masonry or concrete, a masonry cap block, or shall have cavities of the top course filled with concrete or grout. Where required, termite protection for the pier cap shall be provided in accordance with Section R318.

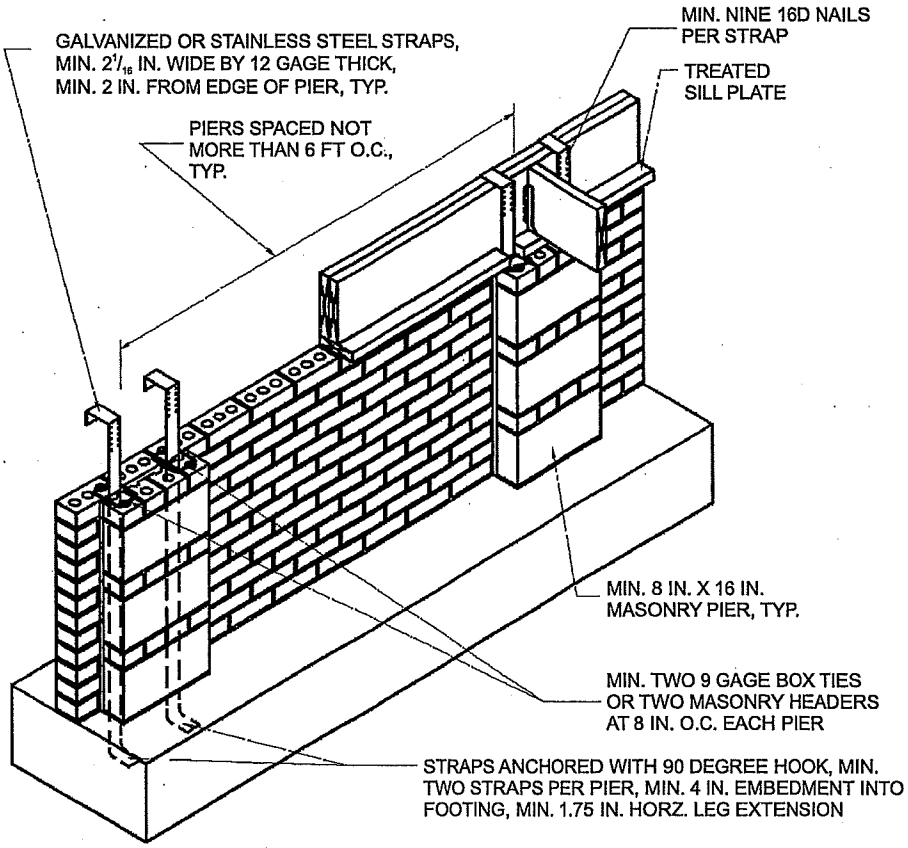

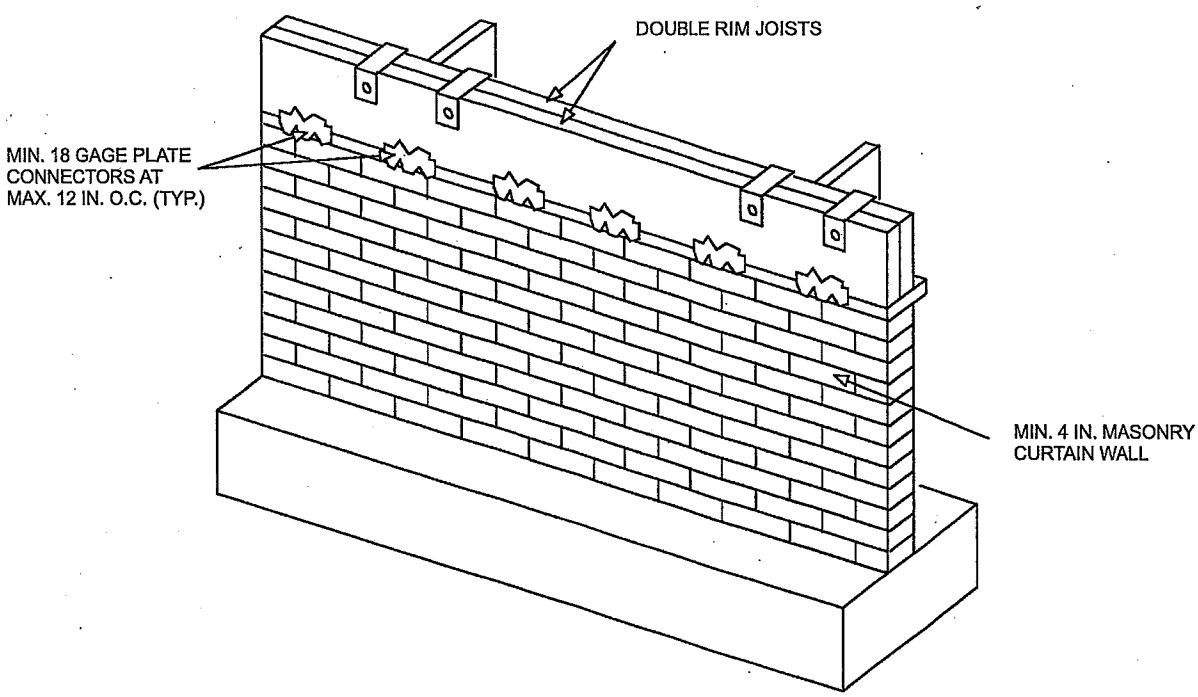

For SI: 1 inch = 25.4 mm, 1 foot = 304.8 mm, 1 degree = 0.0175 rad.

FIGURE R404.1.5(1)
FOUNDATION WALL CLAY MASONRY CURTAIN WALL WITH CONCRETE MASONRY PIERS

2583

R404.1.9.2 Masonry piers supporting floor girders. Masonry piers supporting wood girders sized in accordance with Tables R602.7(1) and R602.7(2) shall be permitted in accordance with this section. Piers supporting girders for interior bearing walls shall have a minimum nominal dimension of 12 inches (305 mm) and a maximum height of 10 feet (3048 mm) from top of footing to bottom of sill plate or girder. Piers supporting girders for exterior bearing walls shall have a minimum nominal dimension of 12 inches (305 mm) and a maximum height of 4 feet (1220 mm) from top of footing to bottom of sill plate or girder. Girders and sill plates shall be anchored to the pier or footing in accordance with Section R403.1.6 or Figure R404.1.5(1). Floor girder bearing shall be in accordance with Section R502.6.

R404.1.9.3 Masonry piers supporting braced wall panels. Masonry piers supporting *braced wall panels* shall be designed in accordance with accepted engineering practice.

R404.1.9.4 Seismic design of masonry piers. Masonry piers in *dwellings* located in Seismic Design Category D_0, D_1 or D_2, and townhouses in Seismic Design Category C, shall be designed in accordance with accepted engineering practice.

R404.1.9.5 Masonry piers in flood hazard areas. Masonry piers for *dwellings* in flood hazard areas shall be designed in accordance with Section R322.

R404.2 Wood foundation walls. Wood foundation walls shall be constructed in accordance with the provisions of Sections R404.2.1 through R404.2.6 and with the details shown in Figures R403.1(2) and R403.1(3).

R404.2.1 Identification. Load-bearing lumber shall be identified by the grade *mark* of a lumber grading or inspection agency which has been *approved* by an accreditation body that complies with DOC PS 20. In lieu of a grade *mark*, a certificate of inspection issued by a lumber grading or inspection agency meeting the requirements of this section shall be accepted. Wood structural panels shall conform to DOC PS 1 or DOC PS 2 and shall be identified by a grade *mark* or certificate of inspection issued by an *approved agency*.

R404.2.2 Stud size. The studs used in foundation walls shall be 2-inch by 6-inch (51 mm by 152 mm) members. When spaced 16 inches (406 mm) on center, a wood species with an F_b value of not less than 1,250 pounds per square inch (8619 kPa) as listed in ANSI AWC NDS shall be used. When spaced 12 inches (305 mm) on center, an F_b of not less than 875 psi (6033 kPa) shall be required.

R404.2.3 Height of backfill. For wood foundations that are not designed and installed in accordance with AWC PWF, the height of backfill against a foundation wall shall not exceed 4 feet (1219 mm). When the height of fill is more than 12 inches (305 mm) above the interior *grade* of a crawl space or floor of a *basement*, the thickness of the plywood sheathing shall meet the requirements of Table R404.2.3.

R404.2.4 Backfilling. Wood foundation walls shall not be backfilled until the *basement* floor and first floor have been constructed or the walls have been braced. For crawl space construction, backfill or bracing shall be installed on the interior of the walls prior to placing backfill on the exterior.

R404.2.5 Drainage and dampproofing. Wood foundation basements shall be drained and dampproofed in accordance with Sections R405 and R406, respectively.

R404.2.6 Fastening. Wood structural panel foundation wall sheathing shall be attached to framing in accordance with Table R602.3(1) and Section R402.1.1.

R404.3 Wood sill plates. Wood sill plates shall be a minimum of 2-inch by 4-inch (51 mm by 102 mm) nominal lumber. Sill plate anchorage shall be in accordance with Sections R403.1.6 and R602.11.

R404.4 Retaining walls. Retaining walls that are not laterally supported at the top and that retain in excess of 48 inches (1219 mm) of unbalanced fill, or retaining walls exceeding 24 inches (610 mm) in height that resist lateral loads in addition to soil, shall be designed in accordance with accepted engineering practice to ensure stability against overturning, sliding, excessive foundation pressure and water uplift. Retaining walls shall be designed for a safety factor of 1.5 against lateral sliding and overturning. This section shall not apply to foundation walls supporting buildings.

R404.5 Precast concrete foundation walls.

R404.5.1 Design. Precast concrete foundation walls shall be designed in accordance with accepted engineering practice. The design and manufacture of precast concrete foundation wall panels shall comply with the materials requirements of Section R402.3 or ACI 318. The panel design drawings shall be prepared by a registered design professional where required by the statutes of the *jurisdiction* in which the project is to be constructed in accordance with Section R106.1.

R404.5.2 Precast concrete foundation design drawings. Precast concrete foundation wall design drawings shall be submitted to the *building official* and *approved* prior to installation. Drawings shall include, at a minimum, the following information:

1. Design loading as applicable.
2. Footing design and material.
3. Concentrated loads and their points of application.
4. Soil bearing capacity.
5. Maximum allowable total uniform load.
6. Seismic design category.
7. Basic wind speed.

R404.5.3 Identification. Precast concrete foundation wall panels shall be identified by a certificate of inspection *label* issued by an *approved* third-party inspection agency.

TABLE R404.2.3
PLYWOOD GRADE AND THICKNESS FOR WOOD FOUNDATION CONSTRUCTION (30 pcf equivalent-fluid weight soil pressure)

HEIGHT OF FILL (inches)	STUD SPACING (inches)	FACE GRAIN ACROSS STUDS			FACE GRAIN PARALLEL TO STUDS		
		Grade[a]	Minimum thickness (inches)	Span rating	Grade[a]	Minimum thickness (inches)[b, c]	Span rating
24	12	B	$^{15}/_{32}$	32/16	A	$^{15}/_{32}$	32/16
					B	$^{15}/_{32}$[c]	32/16
	16	B	$^{15}/_{32}$	32/16	A	$^{15}/_{32}$[c]	32/16
					B	$^{19}/_{32}$[c] (4, 5 ply)	40/20
36	12	B	$^{15}/_{32}$	32/16	A	$^{15}/_{32}$	32/16
					B	$^{15}/_{32}$[c] (4, 5 ply)	32/16
					B	$^{19}/_{32}$ (4, 5 ply)	40/20
	16	B	$^{15}/_{32}$[c]	32/16	A	$^{19}/_{32}$	40/20
					B	$^{23}/_{32}$	48/24
48	12	B	$^{15}/_{32}$	32/16	A	$^{15}/_{32}$[c]	32/16
					B	$^{19}/_{32}$[c] (4, 5 ply)	40/20
	16	B	$^{19}/_{32}$	40/20	A	$^{19}/_{32}$[c]	40/20
					A	$^{23}/_{32}$	48/24

For SI: 1 inch = 25.4 mm, 1 foot = 304.8 mm, 1 pound per cubic foot = 0.1572 kN/m^3.

a. Plywood shall be of the following minimum grades in accordance with DOC PS 1 or DOC PS 2:
   1. DOC PS 1 Plywood grades marked:
      1.1. Structural I C-D (Exposure 1).
      1.2. C-D (Exposure 1).
   2. DOC PS 2 Plywood grades marked:
      2.1. Structural I Sheathing (Exposure 1).
      2.2. Sheathing (Exposure 1).
   3. Where a major portion of the wall is exposed above ground and a better appearance is desired, the following plywood grades marked exterior are suitable:
      3.1. Structural I A-C, Structural I B-C or Structural I C-C (Plugged) in accordance with DOC PS 1.
      3.2. A-C Group 1, B-C Group 1, C-C (Plugged) Group 1 or MDO Group 1 in accordance with DOC PS 1.
      3.3. Single Floor in accordance with DOC PS 1 or DOC PS 2.

b. Minimum thickness $^{15}/_{32}$ inch, except crawl space sheathing shall have not less than $^{3}/_{8}$ inch for face grain across studs 16 inches on center and maximum 2-foot depth of unequal fill.

c. For this fill height, thickness and grade combination, panels that are continuous over less than three spans (across less than three stud spacings) require blocking 16 inches above the bottom plate. Offset adjacent blocks and fasten through studs with two 16d corrosion-resistant nails at each end.

SECTION R405
FOUNDATION DRAINAGE

R405.1 Concrete or masonry foundations. Drains shall be provided around concrete or masonry foundations that retain earth and enclose habitable or usable spaces located below *grade*. Drainage tiles, gravel or crushed stone drains, perforated pipe or other *approved* systems or materials shall be installed at or below the area to be protected and shall discharge by gravity or mechanical means into an *approved* drainage system. Gravel or crushed stone drains shall extend not less than 1 foot (305 mm) beyond the outside edge of the footing and 6 inches (152 mm) above the top of the footing and be covered with an *approved* filter membrane material. The top of open joints of drain tiles shall be protected with strips of building paper. Except where otherwise recommended by the drain manufacturer, perforated drains shall be surrounded with an *approved* filter membrane or the filter membrane shall cover the washed gravel or crushed rock covering the drain. Drainage tiles or perforated pipe shall be placed on a minimum of 2 inches (51 mm) of washed gravel or crushed rock not less than one sieve size larger than the tile joint opening or perforation and covered with not less than 6 inches (152 mm) of the same material.

Exception: A drainage system is not required where the foundation is installed on well-drained ground or sand-gravel mixture soils according to the Unified Soil Classification System, Group I soils, as detailed in Table R405.1.

R405.1.1 Precast concrete foundation. Precast concrete walls that retain earth and enclose habitable or useable space located below-*grade* that rest on crushed stone footings shall have a perforated drainage pipe installed below the base of the wall on either the interior or exterior side of the wall, not less than 1 foot (305 mm) beyond the edge of the wall. If the exterior drainage pipe is used, an *approved* filter membrane material shall cover the pipe. The drainage system shall discharge into an *approved* sewer system or to daylight.

R405.2 Wood foundations. Wood foundations enclosing habitable or usable spaces located below *grade* shall be adequately drained in accordance with Sections R405.2.1 through R405.2.3.

R405.2.1 Base. A porous layer of gravel, crushed stone or coarse sand shall be placed to a minimum thickness of 4 inches (102 mm) under the *basement* floor. Provision shall be made for automatic draining of this layer and the gravel or crushed stone wall footings.

R405.2.2 Vapor retarder. A 6-mil-thick (0.15 mm) polyethylene vapor retarder shall be applied over the porous

layer with the *basement* floor constructed over the polyethylene.

R405.2.3 Drainage system. In other than Group I soils, a sump shall be provided to drain the porous layer and footings. The sump shall be not less than 24 inches (610 mm) in diameter or 20 inches square (0.0129 m^2), shall extend not less than 24 inches (610 mm) below the bottom of the *basement* floor and shall be capable of positive gravity or mechanical drainage to remove any accumulated water. The drainage system shall discharge into an *approved* sewer system or to daylight.

SECTION R406
FOUNDATION WATERPROOFING AND DAMPPROOFING

R406.1 Concrete and masonry foundation dampproofing. Except where required by Section R406.2 to be waterproofed, foundation walls that retain earth and enclose interior spaces and floors below *grade* shall be dampproofed from the higher of (a) the top of the footing or (b) 6 inches (152 mm) below the top of the basement floor, to the finished grade. Masonry walls shall have not less than $^3/_8$ inch (9.5 mm) portland cement parging applied to the exterior of the wall. The parging shall be dampproofed in accordance with one of the following:

1. Bituminous coating.
2. Three pounds per square yard (1.63 kg/m^2) of acrylic modified cement.
3. One-eighth-inch (3.2 mm) coat of surface-bonding cement complying with ASTM C 887.
4. Any material permitted for waterproofing in Section R406.2.
5. Other *approved* methods or materials.

Exception: Parging of unit masonry walls is not required where a material is approved for direct application to the masonry.

Concrete walls shall be dampproofed by applying any one of the listed dampproofing materials or any one of the waterproofing materials listed in Section R406.2 to the exterior of the wall.

R406.2 Concrete and masonry foundation waterproofing. In areas where a high water table or other severe soil-water conditions are known to exist, exterior foundation walls that retain earth and enclose interior spaces and floors below

TABLE R405.1
PROPERTIES OF SOILS CLASSIFIED ACCORDING TO THE UNIFIED SOIL CLASSIFICATION SYSTEM

SOIL GROUP	UNIFIED SOIL CLASSIFICATION SYSTEM SYMBOL	SOIL DESCRIPTION	DRAINAGE CHARACTERISTICS[a]	FROST HEAVE POTENTIAL	VOLUME CHANGE POTENTIAL EXPANSION[b]
Group I	GW	Well-graded gravels, gravel sand mixtures, little or no fines	Good	Low	Low
	GP	Poorly graded gravels or gravel sand mixtures, little or no fines	Good	Low	Low
	SW	Well-graded sands, gravelly sands, little or no fines	Good	Low	Low
	SP	Poorly graded sands or gravelly sands, little or no fines	Good	Low	Low
	GM	Silty gravels, gravel-sand-silt mixtures	Good	Medium	Low
	SM	Silty sand, sand-silt mixtures	Good	Medium	Low
Group II	GC	Clayey gravels, gravel-sand-clay mixtures	Medium	Medium	Low
	SC	Clayey sands, sand-clay mixture	Medium	Medium	Low
	ML	Inorganic silts and very fine sands, rock flour, silty or clayey fine sands or clayey silts with slight plasticity	Medium	High	Low
	CL	Inorganic clays of low to medium plasticity, gravelly clays, sandy clays, silty clays, lean clays	Medium	Medium	Medium to Low
Group III	CH	Inorganic clays of high plasticity, fat clays	Poor	Medium	High
	MH	Inorganic silts, micaceous or diatomaceous fine sandy or silty soils, elastic silts	Poor	High	High
Group IV	OL	Organic silts and organic silty clays of low plasticity	Poor	Medium	Medium
	OH	Organic clays of medium to high plasticity, organic silts	Unsatisfactory	Medium	High
	Pt	Peat and other highly organic soils	Unsatisfactory	Medium	High

For SI: 1 inch = 25.4 mm.

a. The percolation rate for good drainage is over 4 inches per hour, medium drainage is 2 inches to 4 inches per hour, and poor is less than 2 inches per hour.

b. Soils with a low potential expansion typically have a plasticity index (PI) of 0 to 15, soils with a medium potential expansion have a PI of 10 to 35 and soils with a high potential expansion have a PI greater than 20.

grade shall be waterproofed from the higher of (a) the top of the footing or (b) 6 inches (152 mm) below the top of the basement floor, to the finished *grade*. Walls shall be waterproofed in accordance with one of the following:

1. Two-ply hot-mopped felts.
2. Fifty-five-pound (25 kg) roll roofing.
3. Six-mil (0.15 mm) polyvinyl chloride.
4. Six-mil (0.15 mm) polyethylene.
5. Forty-mil (1 mm) polymer-modified asphalt.
6. Sixty-mil (1.5 mm) flexible polymer cement.
7. One-eighth-inch (3 mm) cement-based, fiber-reinforced, waterproof coating.
8. Sixty-mil (1.5 mm) solvent-free liquid-applied synthetic rubber.

Exception: Organic-solvent-based products such as hydrocarbons, chlorinated hydrocarbons, ketones and esters shall not be used for ICF walls with expanded polystyrene form material. Use of plastic roofing cements, acrylic coatings, latex coatings, mortars and pargings to seal ICF walls is permitted. Cold-setting asphalt or hot asphalt shall conform to Type C of ASTM D 449. Hot asphalt shall be applied at a temperature of less than 200°F (93°C).

All joints in membrane waterproofing shall be lapped and sealed with an adhesive compatible with the membrane.

R406.3 Dampproofing for wood foundations. Wood foundations enclosing habitable or usable spaces located below *grade* shall be dampproofed in accordance with Sections R406.3.1 through R406.3.4.

R406.3.1 Panel joint sealed. Plywood panel joints in the foundation walls shall be sealed full length with a caulking compound capable of producing a moistureproof seal under the conditions of temperature and moisture content at which it will be applied and used.

R406.3.2 Below-grade moisture barrier. A 6-mil-thick (0.15 mm) polyethylene film shall be applied over the below-*grade* portion of exterior foundation walls prior to backfilling. Joints in the polyethylene film shall be lapped 6 inches (152 mm) and sealed with adhesive. The top edge of the polyethylene film shall be bonded to the sheathing to form a seal. Film areas at *grade* level shall be protected from mechanical damage and exposure by a pressure-preservative treated lumber or plywood strip attached to the wall several inches above finished *grade* level and extending approximately 9 inches (229 mm) below *grade*. The joint between the strip and the wall shall be caulked full length prior to fastening the strip to the wall. Where approved, other coverings appropriate to the architectural treatment shall be permitted to be used. The polyethylene film shall extend down to the bottom of the wood footing plate but shall not overlap or extend into the gravel or crushed stone footing.

R406.3.3 Porous fill. The space between the excavation and the foundation wall shall be backfilled with the same material used for footings, up to a height of 1 foot (305 mm) above the footing for well-drained sites, or one-half the total back-fill height for poorly drained sites. The porous fill shall be covered with strips of 30-pound (13.6 kg) asphalt paper or 6-mil (0.15 mm) polyethylene to permit water seepage while avoiding infiltration of fine soils.

R406.3.4 Backfill. The remainder of the excavated area shall be backfilled with the same type of soil as was removed during the excavation.

R406.4 Precast concrete foundation system dampproofing. Except where required by Section R406.2 to be waterproofed, precast concrete foundation walls enclosing habitable or useable spaces located below *grade* shall be dampproofed in accordance with Section R406.1.

R406.4.1 Panel joints sealed. Precast concrete foundation panel joints shall be sealed full height with a sealant meeting ASTM C 920, Type S or M, *Grade* NS, Class 25, Use NT, M or A. Joint sealant shall be installed in accordance with the manufacturer's instructions.

SECTION R407
COLUMNS

R407.1 Wood column protection. Wood columns shall be protected against decay as set forth in Section R317.

R407.2 Steel column protection. All surfaces (inside and outside) of steel columns shall be given a shop coat of rust-inhibitive paint, except for corrosion-resistant steel and steel treated with coatings to provide corrosion resistance.

R407.3 Structural requirements. The columns shall be restrained to prevent lateral displacement at the bottom end. Wood columns shall be not less in nominal size than 4 inches by 4 inches (102 mm by 102 mm). Steel columns shall be not less than 3-inch-diameter (76 mm) Schedule 40 pipe manufactured in accordance with ASTM A 53 Grade B or *approved* equivalent.

Exception: In Seismic Design Categories A, B and C, columns not more than 48 inches (1219 mm) in height on a pier or footing are exempt from the bottom end lateral displacement requirement within under-floor areas enclosed by a continuous foundation.

SECTION R408
UNDER-FLOOR SPACE

R408.1 Ventilation. The under-floor space between the bottom of the floor joists and the earth under any building (except space occupied by a *basement*) shall have ventilation openings through foundation walls or exterior walls. The minimum net area of ventilation openings shall be not less than 1 square foot (0.0929 m^2) for each 150 square feet (14 m^2) of under-floor space area, unless the ground surface is covered by a Class 1 vapor retarder material. Where a Class 1 vapor retarder material is used, the minimum net area of ventilation openings shall be not less than 1 square foot (0.0929 m^2) for each 1,500 square feet (140 m^2) of under-floor space area. One such ventilating opening shall be within 3 feet (914 mm) of each corner of the building.

R408.2 Openings for under-floor ventilation. The minimum net area of ventilation openings shall be not less than 1 square foot (0.0929 m^2) for each 150 square feet (14 m^2) of under-floor area. One ventilation opening shall be within 3

feet (915 mm) of each corner of the building. Ventilation openings shall be covered for their height and width with any of the following materials provided that the least dimension of the covering shall not exceed $^1/_4$ inch (6.4 mm):

1. Perforated sheet metal plates not less than 0.070 inch (1.8 mm) thick.
2. Expanded sheet metal plates not less than 0.047 inch (1.2 mm) thick.
3. Cast-iron grill or grating.
4. Extruded load-bearing brick vents.
5. Hardware cloth of 0.035 inch (0.89 mm) wire or heavier.
6. Corrosion-resistant wire mesh, with the least dimension being $^1/_8$ inch (3.2 mm) thick.

Exception: The total area of ventilation openings shall be permitted to be reduced to $^1/_{1,500}$ of the under-floor area where the ground surface is covered with an *approved* Class I vapor retarder material and the required openings are placed to provide cross ventilation of the space. The installation of operable louvers shall not be prohibited.

R408.3 Unvented crawl space. Ventilation openings in under-floor spaces specified in Sections R408.1 and R408.2 shall not be required where the following items are provided:

1. Exposed earth is covered with a continuous Class I vapor retarder. Joints of the vapor retarder shall overlap by 6 inches (152 mm) and shall be sealed or taped. The edges of the vapor retarder shall extend not less than 6 inches (152 mm) up the stem wall and shall be attached and sealed to the stem wall or insulation.
2. One of the following is provided for the under-floor space:
   - 2.1. Continuously operated mechanical exhaust ventilation at a rate equal to 1 cubic foot per minute (0.47 L/s) for each 50 square feet (4.7 m^2) of crawl space floor area, including an air pathway to the common area (such as a duct or transfer grille), and perimeter walls insulated in accordance with Section N1102.2.11 of this code.
   - 2.2. *Conditioned air* supply sized to deliver at a rate equal to 1 cubic foot per minute (0.47 L/s) for each 50 square feet (4.7 m^2) of under-floor area, including a return air pathway to the common area (such as a duct or transfer grille), and perimeter walls insulated in accordance with Section N1102.2.11 of this code.
   - 2.3. Plenum in existing structures complying with Section M1601.5, if under-floor space is used as a plenum.

R408.4 Access. Access shall be provided to all under-floor spaces. Access openings through the floor shall be a minimum of 18 inches by 24 inches (457 mm by 610 mm). Openings through a perimeter wall shall be not less than 16 inches by 24 inches (407 mm by 610 mm). Where any portion of the through-wall access is below *grade*, an areaway not less than 16 inches by 24 inches (407 mm by 610 mm) shall be provided. The bottom of the areaway shall be below the threshold of the access opening. Through wall access openings shall not be located under a door to the residence. See Section M1305.1.4 for access requirements where mechanical *equipment* is located under floors.

R408.5 Removal of debris. The under-floor *grade* shall be cleaned of all vegetation and organic material. All wood forms used for placing concrete shall be removed before a building is occupied or used for any purpose. All construction materials shall be removed before a building is occupied or used for any purpose.

R408.6 Finished grade. The finished *grade* of under-floor surface shall be permitted to be located at the bottom of the footings; however, where there is evidence that the groundwater table can rise to within 6 inches (152 mm) of the finished floor at the building perimeter or where there is evidence that the surface water does not readily drain from the building site, the *grade* in the under-floor space shall be as high as the outside finished *grade*, unless an *approved* drainage system is provided.

R408.7 Flood resistance. For buildings located in flood hazard areas as established in Table R301.2(1):

1. Walls enclosing the under-floor space shall be provided with flood openings in accordance with Section R322.2.2.
2. The finished ground level of the under-floor space shall be equal to or higher than the outside finished ground level on at least one side.

   Exception: Under-floor spaces that meet the requirements of FEMA/FIA TB 11-1.

CHAPTER 5

FLOORS

SECTION R501
GENERAL

R501.1 Application. The provisions of this chapter shall control the design and construction of the floors for buildings, including the floors of *attic* spaces used to house mechanical or plumbing fixtures and *equipment*.

R501.2 Requirements. Floor construction shall be capable of accommodating all loads in accordance with Section R301 and of transmitting the resulting loads to the supporting structural elements.

*

SECTION R502
WOOD FLOOR FRAMING

R502.1 General. Wood and wood-based products used for load-supporting purposes shall conform to the applicable provisions of this section.

R502.1.1 Sawn lumber. Sawn lumber shall be identified by a grade *mark* of an accredited lumber grading or inspection agency and have design values certified by an accreditation body that complies with DOC PS 20. In lieu of a grade *mark*, a certificate of inspection issued by a lumber grading or inspection agency meeting the requirements of this section shall be accepted.

R502.1.1.1 Preservative-treated lumber. Preservative treated dimension lumber shall also be identified as required by Section R317.2.

*

R502.1.1.2 End-jointed lumber. *Approved* end-jointed lumber identified by a grade *mark* conforming to Section R502.1.1 shall be permitted to be used interchangeably with solid-sawn members of the same species and grade. End-jointed lumber used in an assembly required elsewhere in this code to have a fire-resistance rating shall have the designation "Heat Resistant Adhesive" or "HRA" included in its grade mark.

R502.1.2 Prefabricated wood I-joists. Structural capacities and design provisions for prefabricated wood I-joists shall be established and monitored in accordance with ASTM D 5055.

R502.1.3 Structural glued laminated timbers. Glued laminated timbers shall be manufactured and identified as required in ANSI/AITC A190.1 and ASTM D 3737.

R502.1.4 Structural log members. Structural log members shall comply with the provisions of ICC-400.

R502.1.5 Structural composite lumber. Structural capacities for structural composite lumber shall be established and monitored in accordance with ASTM D 5456.

R502.1.6 Cross-laminated timber. Cross-laminated timber shall be manufactured and identified as required by ANSI/APA PRG 320.

R502.1.7 Engineered wood rim board. Engineered wood rim boards shall conform to ANSI/APA PRR 410 or shall be evaluated in accordance with ASTM D 7672. Structural capacities shall be in accordance with ANSI/APA PRR 410 or established in accordance with ASTM D 7672. Rim boards conforming to ANSI/APA PRR 410 shall be marked in accordance with that standard.

R502.2 Design and construction. Floors shall be designed and constructed in accordance with the provisions of this chapter, Figure R502.2 and Sections R317 and R318 or in accordance with ANSI AWC NDS.

R502.2.1 Framing at braced wall lines. A load path for lateral forces shall be provided between floor framing and *braced wall panels* located above or below a floor, as specified in Section R602.10.8.

R502.2.2 Blocking and subflooring. Blocking for fastening panel edges or fixtures shall be a minimum of utility grade lumber. Subflooring shall be a minimum of utility grade lumber or No. 4 common grade boards. Fireblocking shall be of any grade lumber. **

R502.3 Allowable joist spans. Spans for floor joists shall be in accordance with Tables R502.3.1(1) and R502.3.1(2). For other grades and species and for other loading conditions, refer to the AWC STJR.

R502.3.1 Sleeping areas and attic joists. Table R502.3.1(1) shall be used to determine the maximum allowable span of floor joists that support sleeping areas and *attics* that are accessed by means of a fixed stairway in accordance with Section R311.7 provided that the design live load does not exceed 30 pounds per square foot (1.44 kPa) and the design dead load does not exceed 20 pounds per square foot (0.96 kPa). The allowable span of ceiling joists that support *attics* used for limited storage or no storage shall be determined in accordance with Section R802.4.

R502.3.2 Other floor joists. Table R502.3.1(2) shall be used to determine the maximum allowable span of floor joists that support other areas of the building, other than sleeping rooms and *attics*, provided that the design live load does not exceed 40 pounds per square foot (1.92 kPa) and the design dead load does not exceed 20 pounds per square foot (0.96 kPa).

R502.3.3 Floor cantilevers. Floor cantilever spans shall not exceed the nominal depth of the wood floor joist. Floor cantilevers constructed in accordance with Table R502.3.3(1) shall be permitted where supporting a light-frame bearing wall and roof only. Floor cantilevers supporting an exterior balcony are permitted to be constructed in accordance with Table R502.3.3(2).

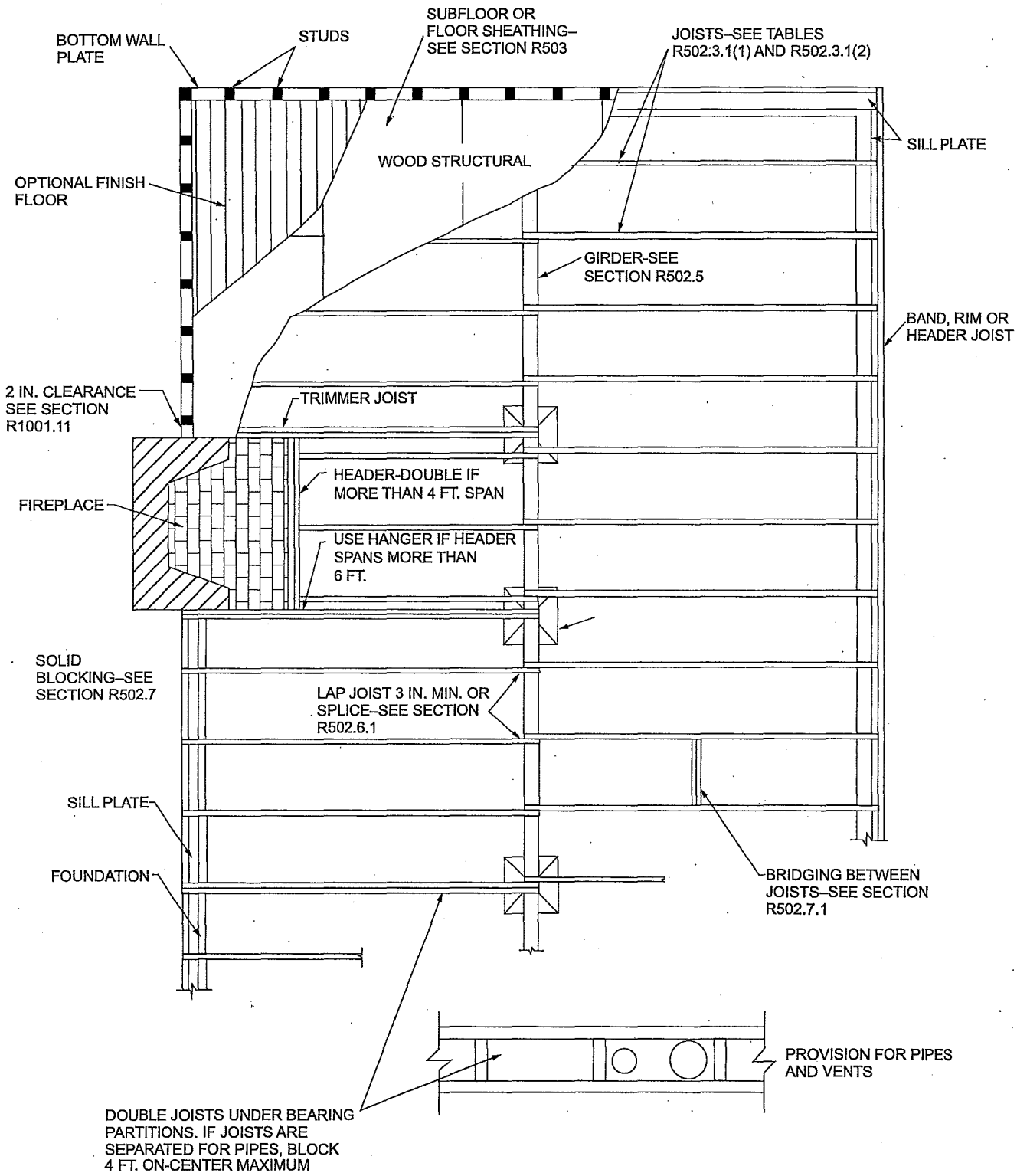

For SI: 1 inch = 25.4 mm, 1 foot = 304.8 mm.

FIGURE R502.2
FLOOR CONSTRUCTION

2590

TABLE R502.3.1(1)
FLOOR JOIST SPANS FOR COMMON LUMBER SPECIES
(Residential sleeping areas, live load = 30 psf, L/Δ = 360)[a]

JOIST SPACING (inches)	SPECIES AND GRADE		DEAD LOAD = 10 psf				DEAD LOAD = 20 psf			
			2 × 6	2 × 8	2 × 10	2 × 12	2 × 6	2 × 8	2 × 10	2 × 12
			Maximum floor joist spans							
			(ft. - in.)	(ft. - in.)	(ft. - in.)	(ft. - in.)	(ft. - in.)	(ft. - in.)	(ft. - in.)	(ft. - in.)
12	Douglas fir-larch	SS	12-6	16-6	21-0	25-7	12-6	16-6	21-0	25-7
	Douglas fir-larch	#1	12-0	15-10	20-3	24-8	12-0	15-7	19-0	22-0
	Douglas fir-larch	#2	11-10	15-7	19-10	23-4	11-8	14-9	18-0	20-11
	Douglas fir-larch	#3	9-11	12-7	15-5	17-10	8-11	11-3	13-9	16-0
	Hem-fir	SS	11-10	15-7	19-10	24-2	11-10	15-7	19-10	24-2
	Hem-fir	#1	11-7	15-3	19-5	23-7	11-7	15-3	18-9	21-9
	Hem-fir	#2	11-0	14-6	18-6	22-6	11-0	14-4	17-6	20-4
	Hem-fir	#3	9-8	12-4	15-0	17-5	8-8	11-0	13-5	15-7
	Southern pine	SS	12-3	16-2	20-8	25-1	12-3	16-2	20-8	25-1
	Southern pine	#1	11-10	15-7	19-10	24-2	11-10	15-7	18-7	22-0
	Southern pine	#2	11-3	14-11	18-1	21-4	10-9	13-8	16-2	19-1
	Southern pine	#3	9-2	11-6	14-0	16-6	8-2	10-3	12-6	14-9
	Spruce-pine-fir	SS	11-7	15-3	19-5	23-7	11-7	15-3	19-5	23-7
	Spruce-pine-fir	#1	11-3	14-11	19-0	23-0	11-3	14-7	17-9	20-7
	Spruce-pine-fir	#2	11-3	14-11	19-0	23-0	11-3	14-7	17-9	20-7
	Spruce-pine-fir	#3	9-8	12-4	15-0	17-5	8-8	11-0	13-5	15-7
16	Douglas fir-larch	SS	11-4	15-0	19-1	23-3	11-4	15-0	19-1	23-3
	Douglas fir-larch	#1	10-11	14-5	18-5	21-4	10-8	13-6	16-5	19-1
	Douglas fir-larch	#2	10-9	14-2	17-5	20-3	10-1	12-9	15-7	18-1
	Douglas fir-larch	#3	8-7	10-11	13-4	15-5	7-8	9-9	11-11	13-10
	Hem-fir	SS	10-9	14-2	18-0	21-11	10-9	14-2	18-0	21-11
	Hem-fir	#1	10-6	13-10	17-8	21-1	10-6	13-4	16-3	18-10
	Hem-fir	#2	10-0	13-2	16-10	19-8	9-10	12-5	15-2	17-7
	Hem-fir	#3	8-5	10-8	13-0	15-1	7-6	9-6	11-8	13-6
	Southern pine	SS	11-2	14-8	18-9	22-10	11-2	14-8	18-9	22-10
	Southern pine	#1	10-9	14-2	18-0	21-4	10-9	13-9	16-1	19-1
	Southern pine	#2	10-3	13-3	15-8	18-6	9-4	11-10	14-0	16-6
	Southern pine	#3	7-11	10-0	11-1	14-4	7-1	8-11	10-10	12-10
	Spruce-pine-fir	SS	10-6	13-10	17-8	21-6	10-6	13-10	17-8	21-4
	Spruce-pine-fir	#1	10-3	13-6	17-2	19-11	9-11	12-7	15-5	17-10
	Spruce-pine-fir	#2	10-3	13-6	17-2	19-11	9-11	12-7	15-5	17-10
	Spruce-pine-fir	#3	8-5	10-8	13-0	15-1	7-6	9-6	11-8	13-6

(continued)

TABLE R502.3.1(1)—continued
FLOOR JOIST SPANS FOR COMMON LUMBER SPECIES
(Residential sleeping areas, live load = 30 psf, L/Δ = 360)[a]

JOIST SPACING (inches)	SPECIES AND GRADE		DEAD LOAD = 10 psf				DEAD LOAD = 20 psf			
			2 × 6	2 × 8	2 × 10	2 × 12	2 × 6	2 × 8	2 × 10	2 × 12
			Maximum floor joist spans							
			(ft.- in.)	(ft. - in.)	(ft. - in.)	(ft. - in.)	(ft. - in.)	(ft. - in.)	(ft. - in.)	(ft. - in.)
19.2	Douglas fir-larch	SS	10-8	14-1	18-0	21-10	10-8	14-1	18-0	21-4
	Douglas fir-larch	#1	10-4	13-7	16-9	19-6	9-8	12-4	15-0	17-5
	Douglas fir-larch	#2	10-1	13-0	15-11	18-6	9-3	11-8	14-3	16-6
	Douglas fir-larch	#3	7-10	10-0	12-2	14-1	7-0	8-11	10-11	12-7
	Hem-fir	SS	10-1	13-4	17-0	20-8	10-1	13-4	17-0	20-7
	Hem-fir	#1	9-10	13-0	16-7	19-3	9-7	12-2	14-10	17-2
	Hem-fir	#2	9-5	12-5	15-6	17-1	8-11	11-4	13-10	16-1
	Hem-fir	#3	7-8	9-9	11-10	13-9	6-10	8-8	10-7	12-4
	Southern pine	SS	10-6	13-10	17-8	21-6	10-6	13-10	17-8	21-6
	Southern pine	#1	10-1	13-4	16-5	19-6	9-11	12-7	14-8	17-5
	Southern pine	#2	9-6	12-1	14-4	16-10	8-6	10-10	12-10	15-1
	Southern pine	#3	7-3	9-1	11-0	13-1	6-5	8-2	9-10	11-8
	Spruce-pine-fir	SS	9-10	13-0	16-7	20-2	9-10	13-0	16-7	19-6
	Spruce-pine-fir	#1	9-8	12-9	15-8	18-3	9-1	11-6	14-1	16-3
	Spruce-pine-fir	#2	9-8	12-9	15-8	18-3	9-1	11-6	14-1	16-3
	Spruce-pine-fir	#3	7-8	9-9	11-10	13-9	6-10	8-8	10-7	12-4
24	Douglas fir-larch	SS	9-11	13-1	16-8	20-3	9-11	13-1	16-5	19-1
	Douglas fir-larch	#1	9-7	12-4	15-0	17-5	8-8	11-0	13-5	15-7
	Douglas fir-larch	#2	9-3	11-8	14-3	16-6	8-3	10-5	12-9	14-9
	Douglas fir-larch	#3	7-0	8-11	10-11	12-7	6-3	8-0	9-9	11-3
	Hem-fir	SS	9-4	12-4	15-9	19-2	9-4	12-4	15-9	18-5
	Hem-fir	#1	9-2	12-1	14-10	17-2	8-7	10-10	13-3	15-5
	Hem-fir	#2	8-9	11-4	13-10	16-1	8-0	10-2	12-5	14-4
	Hem-fir	#3	6-10	8-8	10-7	12-4	6-2	7-9	9-6	11-0
	Southern pine	SS	9-9	12-10	16-5	19-11	9-9	12-10	16-5	19-8
	Southern pine	#1	9-4	12-4	14-8	17-5	8-10	11-3	13-1	15-7
	Southern pine	#2	8-6	10-10	12-10	15-1	7-7	9-8	11-5	13-6
	Southern pine	#3	6-5	8-2	9-10	11-8	5-9	7-3	8-10	10-5
	Spruce-pine-fir	SS	9-2	12-1	15-5	18-9	9-2	12-1	15-0	17-5
	Spruce-pine-fir	#1	8-11	11-6	14-1	16-3	8-1	10-3	12-7	14-7
	Spruce-pine-fir	#2	8-11	11-6	14-1	16-3	8-1	10-3	12-7	14-7
	Spruce-pine-fir	#3	6-10	8-8	10-7	12-4	6-2	7-9	9-6	11-0

For SI: 1 inch = 25.4 mm, 1 foot = 304.8 mm, 1 pound per square foot = 0.0479 kPa.

Note: Check sources for availability of lumber in lengths greater than 20 feet.

a. Dead load limits for townhouses in Seismic Design Category C and all structures in Seismic Design Categories D_0, D_1 and D_2 shall be determined in accordance with Section R301.2.2.2.1.

TABLE R502.3.1(2)
FLOOR JOIST SPANS FOR COMMON LUMBER SPECIES
(Residential living areas, live load = 40 psf, L/Δ = 360)[b]

JOIST SPACING (inches)	SPECIES AND GRADE		DEAD LOAD = 10 psf				DEAD LOAD = 20 psf			
			2 × 6	2 × 8	2 × 10	2 × 12	2 × 6	2 × 8	2 × 10	2 × 12
			Maximum floor joist spans							
			(ft. - in.)	(ft. - in.)	(ft. - in.)	(ft. - in.)	(ft. - in.)	(ft. - in.)	(ft. - in.)	(ft. - in.)
12	Douglas fir-larch	SS	11-4	15-0	19-1	23-3	11-4	15-0	19-1	23-3
	Douglas fir-larch	#1	10-11	14-5	18-5	22-0	10-11	14-2	17-4	20-1
	Douglas fir-larch	#2	10-9	14-2	18-0	20-11	10-8	13-6	16-5	19-1
	Douglas fir-larch	#3	8-11	11-3	13-9	16-0	8-1	10-3	12-7	14-7
	Hem-fir	SS	10-9	14-2	18-0	21-11	10-9	14-2	18-0	21-11
	Hem-fir	#1	10-6	13-10	17-8	21-6	10-6	13-10	17-1	19-10
	Hem-fir	#2	10-0	13-2	16-10	20-4	10-0	13-1	16-0	18-6
	Hem-fir	#3	8-8	11-0	13-5	15-7	7-11	10-0	12-3	14-3
	Southern pine	SS	11-2	14-8	18-9	22-10	11-2	14-8	18-9	22-10
	Southern pine	#1	10-9	14-2	18-0	21-11	10-9	14-2	16-11	20-1
	Southern pine	#2	10-3	13-6	16-2	19-1	9-10	12-6	14-9	17-5
	Southern pine	#3	8-2	10-3	12-6	14-9	7-5	9-5	11-5	13-6
	Spruce-pine-fir	SS	10-6	13-10	17-8	21-6	10-6	13-10	17-8	21-6
	Spruce-pine-fir	#1	10-3	13-6	17-3	20-7	10-3	13-3	16-3	18-10
	Spruce-pine-fir	#2	10-3	13-6	17-3	20-7	10-3	13-3	16-3	18-10
	Spruce-pine-fir	#3	8-8	11-0	13-5	15-7	7-11	10-0	12-3	14-3
16	Douglas fir-larch	SS	10-4	13-7	17-4	21-1	10-4	13-7	17-4	21-1
	Douglas fir-larch	#1	9-11	13-1	16-5	19-1	9-8	12-4	15-0	17-5
	Douglas fir-larch	#2	9-9	12-9	15-7	18-1	9-3	11-8	14-3	16-6
	Douglas fir-larch	#3	7-8	9-9	11-11	13-10	7-0	8-11	10-11	12-7
	Hem-fir	SS	9-9	12-10	16-5	19-11	9-9	12-10	16-5	19-11
	Hem-fir	#1	9-6	12-7	16-0	18-10	9-6	12-2	14-10	17-2
	Hem-fir	#2	9-1	12-0	15-2	17-7	8-11	11-4	13-10	16-1
	Hem-fir	#3	7-6	9-6	11-8	13-6	6-10	8-8	10-7	12-4
	Southern pine	SS	10-2	13-4	17-0	20-9	10-2	13-4	17-0	20-9
	Southern pine	#1	9-9	12-10	16-1	19-1	9-9	12-7	14-8	17-5
	Southern pine	#2	9-4	11-10	14-0	16-6	8-6	10-10	12-10	15-1
	Southern pine	#3	7-1	8-11	10-10	12-10	6-5	8-2	9-10	11-8
	Spruce-pine-fir	SS	9-6	12-7	16-0	19-6	9-6	12-7	16-0	19-6
	Spruce-pine-fir	#1	9-4	12-3	15-5	17-10	9-1	11-6	14-1	16-3
	Spruce-pine-fir	#2	9-4	12-3	15-5	17-10	9-1	11-6	14-1	16-3
	Spruce-pine-fir	#3	7-6	9-6	11-8	13-6	6-10	8-8	10-7	12-4

(continued)

TABLE R502.3.1(2)—continued
FLOOR JOIST SPANS FOR COMMON LUMBER SPECIES
(Residential living areas, live load = 40 psf, L/Δ = 360)[b]

JOIST SPACING (inches)	SPECIES AND GRADE		DEAD LOAD = 10 psf				DEAD LOAD = 20 psf			
			2 × 6	2 × 8	2 × 10	2 × 12	2 × 6	2 × 8	2 × 10	2 × 12
			Maximum floor joist spans							
			(ft. - in.)	(ft. - in.)	(ft. - in.)	(ft. - in.)	(ft. - in.)	(ft. - in.)	(ft. - in.)	(ft. - in.)
19.2	Douglas fir-larch	SS	9-8	12-10	16-4	19-10	9-8	12-10	16-4	19-6
	Douglas fir-larch	#1	9-4	12-4	15-0	17-5	8-10	11-3	13-8	15-11
	Douglas fir-larch	#2	9-2	11-8	14-3	16-6	8-5	10-8	13-0	15-1
	Douglas fir-larch	#3	7-0	8-11	10-11	12-7	6-5	8-2	9-11	11-6
	Hem-fir	SS	9-2	12-1	15-5	18-9	9-2	12-1	15-5	18-9
	Hem-fir	#1	9-0	11-10	14-10	17-2	8-9	11-1	13-6	15-8
	Hem-fir	#2	8-7	11-3	13-10	16-1	8-2	10-4	12-8	14-8
	Hem-fir	#3	6-10	8-8	10-7	12-4	6-3	7-11	9-8	11-3
	Southern pine	SS	9-6	12-7	16-0	19-6	9-6	12-7	16-0	19-6
	Southern pine	#1	9-2	12-1	14-8	17-5	9-0	11-5	13-5	15-11
	Southern pine	#2	8-6	10-10	12-10	15-1	7-9	9-10	11-8	13-9
	Southern pine	#3	6-5	8-2	9-10	11-8	5-11	7-5	9-0	10-8
	Spruce-pine-fir	SS	9-0	11-10	15-1	18-4	9-0	11-10	15-1	17-9
	Spruce-pine-fir	#	8-9	11-6	14-1	16-3	8-3	10-6	12-10	14-10
	Spruce-pine-fir	#2	8-9	11-6	14-1	16-3	8-3	10-6	12-10	14-10
	Spruce-pine-fir	#3	6-10	8-8	10-7	12-4	6-3	7-11	9-8	11-3
24	Douglas fir-larch	SS	9-0	11-11	15-2	18-5	9-0	11-11	15-0	17-5
	Douglas fir-larch	#1	8-8	11-0	13-5	15-7	7-11	10-0	12-3	14-3
	Douglas fir-larch	#2	8-3	10-5	12-9	14-9	7-6	9-6	11-8	13-6
	Douglas fir-larch	#3	6-3	8-0	9-9	11-3	5-9	7-3	8-11	10-4
	Hem-fir	SS	8-6	11-3	14-4	17-5	8-6	11-3	14-4	16-10[a]
	Hem-fir	#1	8-4	10-10	13-3	15-5	7-10	9-11	12-1	14-0
	Hem-fir	#2	7-11	10-2	12-5	14-4	7-4	9-3	11-4	13-1
	Hem-fir	#3	6-2	7-9	9-6	11-0	5-7	7-1	8-8	10-1
	Southern pine	SS	8-10	11-8	14-11	18-1	8-10	11-8	14-11	18-0
	Southern pine	#1	8-6	11-3	13-1	15-7	8-1	10-3	12-0	14-3
	Southern pine	#2	7-7	9-8	11-5	13-6	7-0	8-10	10-5	12-4
	Southern pine	#3	5-9	7-3	8-10	10-5	5-3	6-8	8-1	9-6
	Spruce-pine-fir	SS	8-4	11-0	14-0	17-0	8-4	11-0	13-8	15-11
	Spruce-pine-fir	#1	8-1	10-3	12-7	14-7	7-5	9-5	11-6	13-4
	Spruce-pine-fir	#2	8-1	10-3	12-7	14-7	7-5	9-5	11-6	13-4
	Spruce-pine-fir	#3	6-2	7-9	9-6	11-0	5-7	7-1	8-8	10-1

For SI: 1 inch = 25.4 mm, 1 foot = 304.8 mm, 1 pound per square foot = 0.0479 kPa.

Note: Check sources for availability of lumber in lengths greater than 20 feet.

a. End bearing length shall be increased to 2 inches.

b. Dead load limits for townhouses in Seismic Design Category C and all structures in Seismic Design Categories D_0, D_1, and D_2 shall be determined in accordance with Section R301.2.2.2.1.

TABLE R502.3.3(1)
CANTILEVER SPANS FOR FLOOR JOISTS SUPPORTING LIGHT-FRAME EXTERIOR BEARING WALL AND ROOF ONLY[a, b, c, f, g, h]
(Floor Live Load ≤ 40 psf, Roof Live Load ≤ 20 psf)

MEMBER & SPACING	MAXIMUM CANTILEVER SPAN (uplift force at backspan support in lbs.)[d, e]											
	Ground Snow Load											
	≤ 20 psf			30 psf			50 psf			70 psf		
	Roof Width			Roof Width			Roof Width			Roof Width		
	24 ft	32 ft	40 ft	24 ft	32 ft	40 ft	24 ft	32 ft	40 ft	24 ft	32 ft	40 ft
2 × 8 @ 12″	20″ (177)	15″ (227)	—	18″ (209)	—	—	—	—	—	—	—	—
2 × 10 @ 16″	29″ (228)	21″ (297)	16″ (364)	26″ (271)	18″ (354)	—	20″ (375)	—	—	—	—	—
2 × 10 @ 12″	36″ (166)	26″ (219)	20″ (270)	34″ (198)	22″ (263)	16″ (324)	26″ (277)	—	—	19″ (356)	—	—
2 × 12 @ 16″	—	32″ (287)	25″ (356)	36″ (263)	29″ (345)	21″ (428)	29″ (367)	20″ (484)	—	23″ (471)	—	—
2 × 12 @ 12″	—	42″ (209)	31″ (263)	—	37″ (253)	27″ (317)	36″ (271)	27″ (358)	17″ (447)	31″ (348)	19″ (462)	—
2 × 12 @ 8″	—	48″ (136)	45″ (169)	—	48″ (164)	38″ (206)	—	40″ (233)	26″ (294)	36″ (230)	29″ (304)	18″ (379)

For SI: 1 inch = 25.4 mm, 1 foot = 304.8 mm, 1 pound per square foot = 0.0479 kPa.

a. Tabulated values are for clear-span roof supported solely by exterior bearing walls.

b. Spans are based on No. 2 Grade lumber of Douglas fir-larch, hem-fir, and spruce-pine-fir for repetitive (three or more) members. No.1 or better shall be used for southern pine.

c. Ratio of backspan to cantilever span shall be not less than 3:1.

d. Connections capable of resisting the indicated uplift force shall be provided at the backspan support.

e. Uplift force is for a backspan to cantilever span ratio of 3:1. Tabulated uplift values are permitted to be reduced by multiplying by a factor equal to 3 divided by the actual backspan ratio provided (3/backspan ratio).

f. See Section R301.2.2.2.5, Item 1, for additional limitations on cantilevered floor joists for detached one- and two-family dwellings in Seismic Design Category D_0, D_1, or D_2 and townhouses in Seismic Design Category C, D_0, D_1 or D_2.

g. A full-depth rim joist shall be provided at the unsupported end of the cantilever joists. Solid blocking shall be provided at the supported end. Where the cantilever length is 24 inches or less and the building is assigned to Seismic Design Category A, B or C, solid blocking at the support for the cantilever shall not be required.

h. Linear interpolation shall be permitted for building widths and ground snow loads other than shown.

TABLE R502.3.3(2)
CANTILEVER SPANS FOR FLOOR JOISTS SUPPORTING EXTERIOR BALCONY[a, b, e, f]

MEMBER SIZE	SPACING	MAXIMUM CANTILEVER SPAN (uplift force at backspan support in lbs.)[c, d]		
		Ground Snow Load		
		≤ 30 psf	50 psf	70 psf
2 × 8	12″	42″ (139)	39″ (156)	34″ (165)
2 × 8	16″	36″ (151)	34″ (171)	29″ (180)
2 × 10	12″	61″ (164)	57″ (189)	49″ (201)
2 × 10	16″	53″ (180)	49″ (208)	42″ (220)
2 × 10	24″	43″ (212)	40″ (241)	34″ (255)
2 × 12	16″	72″ (228)	67″ (260)	57″ (268)
2 × 12	24″	58″ (279)	54″ (319)	47″ (330)

For SI: 1 inch = 25.4 mm, 1 pound per square foot = 0.0479 kPa.

a. Spans are based on No. 2 Grade lumber of Douglas fir-larch, hem-fir, and spruce-pine-fir for repetitive (three or more) members. No.1 or better shall be used for southern pine.

b. Ratio of backspan to cantilever span shall be not less than 2:1.

c. Connections capable of resisting the indicated uplift force shall be provided at the backspan support.

d. Uplift force is for a backspan to cantilever span ratio of 2:1. Tabulated uplift values are permitted to be reduced by multiplying by a factor equal to 2 divided by the actual backspan ratio provided (2/backspan ratio).

e. A full-depth rim joist shall be provided at the unsupported end of the cantilever joists. Solid blocking shall be provided at the supported end. Where the cantilever length is 24 inches or less and the building is assigned to Seismic Design Category A, B or C, solid blocking at the support for the cantilever shall not be required.

f. Linear interpolation shall be permitted for ground snow loads other than shown.

R502.4 Joists under bearing partitions. Joists under parallel bearing partitions shall be of adequate size to support the load. Double joists, sized to adequately support the load, that are separated to permit the installation of piping or vents shall be full depth solid blocked with lumber not less than 2 inches (51 mm) in nominal thickness spaced not more than 4 feet (1219 mm) on center. Bearing partitions perpendicular to joists shall not be offset from supporting girders, walls or partitions more than the joist depth unless such joists are of sufficient size to carry the additional load.

R502.5 Allowable girder and header spans. The allowable spans of girders and headers fabricated of dimension lumber shall not exceed the values set forth in Tables R602.7(1), R602.7(2) and R602.7(3).

R502.6 Bearing. The ends of each joist, beam or girder shall have not less than $1^1/_2$ inches (38 mm) of bearing on wood or metal and not less than 3 inches (76 mm) on masonry or concrete except where supported on a 1-inch by 4-inch (25 mm by 102 mm) ribbon strip and nailed to the adjacent stud or by the use of approved joist hangers. The bearing on masonry or concrete shall be direct, or a sill plate of 2-inch-minimum (51 mm) nominal thickness shall be provided under the joist, beam or girder. The sill plate shall provide a minimum nominal bearing area of 48 square inches (30 865 square mm).

R502.6.1 Floor systems. Joists framing from opposite sides over a bearing support shall lap not less than 3 inches (76 mm) and shall be nailed together with a minimum three 10d face nails. A wood or metal splice with strength equal to or greater than that provided by the nailed lap is permitted.

R502.6.2 Joist framing. Joists framing into the side of a wood girder shall be supported by *approved* framing anchors or on ledger strips not less than nominal 2 inches by 2 inches (51 mm by 51 mm).

R502.7 Lateral restraint at supports. Joists shall be supported laterally at the ends by full-depth solid blocking not less than 2 inches (51 mm) nominal in thickness; or by attachment to a full-depth header, band or rim joist, or to an adjoining stud or shall be otherwise provided with lateral support to prevent rotation.

Exceptions:

1. Trusses, structural composite lumber, structural glued-laminated members and I-joists shall be supported laterally as required by the manufacturer's recommendations.
2. In Seismic Design Categories D_0, D_1 and D_2, lateral restraint shall be provided at each intermediate support.

R502.7.1 Bridging. Joists exceeding a nominal 2 inches by 12 inches (51 mm by 305 mm) shall be supported laterally by solid blocking, diagonal bridging (wood or metal), or a continuous 1 inch by 3 inch (25.4 mm by 76 mm) strip nailed across the bottom of joists perpendicular to joists at intervals not exceeding 8 feet (2438 mm).

Exception: Trusses, structural composite lumber, structural glued-laminated members and I-joists shall be supported laterally as required by the manufacturer's recommendations.

R502.8 Cutting, drilling and notching. Structural floor members shall not be cut, bored or notched in excess of the limitations specified in this section. See Figure R502.8.

R502.8.1 Sawn lumber. Notches in solid lumber joists, rafters and beams shall not exceed one-sixth of the depth of the member, shall not be longer than one-third of the depth of the member and shall not be located in the middle one-third of the span. Notches at the ends of the member shall not exceed one-fourth the depth of the member. The tension side of members 4 inches (102 mm) or greater in nominal thickness shall not be notched except at the ends of the members. The diameter of holes bored or cut into members shall not exceed one-third the depth of the member. Holes shall not be closer than 2 inches (51 mm) to the top or bottom of the member, or to any other hole located in the member. Where the member is also notched, the hole shall not be closer than 2 inches (51 mm) to the notch.

R502.8.2 Engineered wood products. Cuts, notches and holes bored in trusses, structural composite lumber, structural glue-laminated members, cross-laminated timber members or I-joists are prohibited except where permitted by the manufacturer's recommendations or where the effects of such alterations are specifically considered in the design of the member by a *registered design professional.*

R502.9 Fastening. Floor framing shall be nailed in accordance with Table R602.3(1). Where posts and beam or girder construction is used to support floor framing, positive connections shall be provided to ensure against uplift and lateral displacement.

R502.10 Framing of openings. Openings in floor framing shall be framed with a header and trimmer joists. Where the header joist span does not exceed 4 feet (1219 mm), the header joist shall be a single member the same size as the floor joist. Single trimmer joists shall be used to carry a single header joist that is located within 3 feet (914 mm) of the trimmer joist bearing. Where the header joist span exceeds 4 feet (1219 mm), the trimmer joists and the header joist shall be doubled and of sufficient cross section to support the floor joists framing into the header.

R502.11 Wood trusses.

R502.11.1 Design. Wood trusses shall be designed in accordance with *approved* engineering practice. The design and manufacture of metal-plate-connected wood trusses shall comply with ANSI/TPI 1. The truss design drawings shall be prepared by a registered professional where required by the statutes of the *jurisdiction* in which the project is to be constructed in accordance with Section R106.1.

R502.11.2 Bracing. Trusses shall be braced to prevent rotation and provide lateral stability in accordance with the requirements specified in the *construction documents* for the building and on the individual truss design drawings. In the absence of specific bracing requirements, trusses shall be braced in accordance with accepted industry practices, such as, the SBCA *Building Component Safety Information (BCSI) Guide to Good Practice for Handling, Installing & Bracing of Metal Plate Connected Wood Trusses.*

R502.11.3 Alterations to trusses. Truss members and components shall not be cut, notched, spliced or otherwise altered in any way without the approval of a registered *design professional. Alterations* resulting in the addition of load that exceed the design load for the truss, shall not be permitted without verification that the truss is capable of supporting the additional loading.

R502.11.4 Truss design drawings. Truss design drawings, prepared in compliance with Section R502.11.1, shall be submitted to the *building official* and *approved* prior to installation. Truss design drawings shall be provided with the shipment of trusses delivered to the job site. Truss design drawings shall include, at a minimum, the information specified as follows:

1. Slope or depth, span and spacing.
2. Location of all joints.
3. Required bearing widths.
4. Design loads as applicable:
   - 4.1. Top chord live load.
   - 4.2. Top chord dead load.
   - 4.3. Bottom chord live load.
   - 4.4. Bottom chord dead load.
   - 4.5. Concentrated loads and their points of application.
   - 4.6. Controlling wind and earthquake loads.
5. Adjustments to lumber and joint connector design values for conditions of use.
6. Each reaction force and direction.

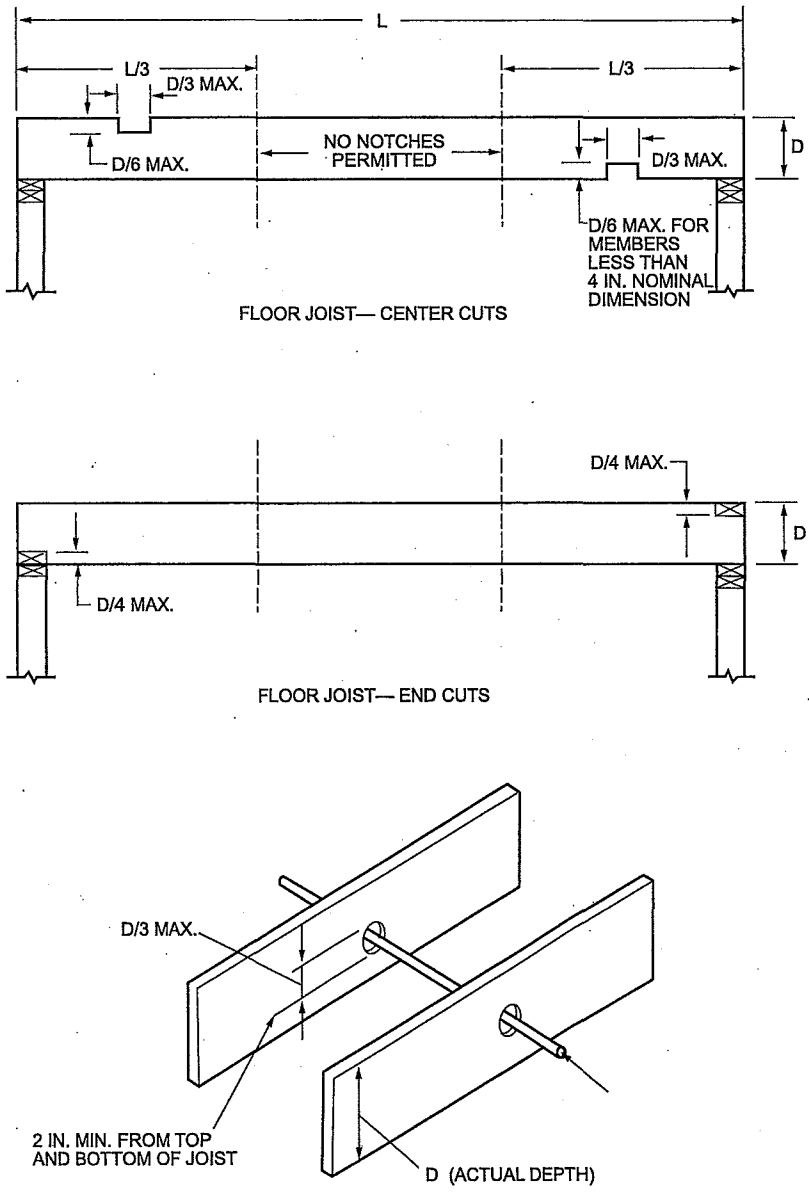

For SI: 1 inch = 25.4 mm.

FIGURE R502.8
CUTTING, NOTCHING AND DRILLING

2597

7. Joint connector type and description, such as size, thickness or gage, and the dimensioned location of each joint connector except where symmetrically located relative to the joint interface.
8. Lumber size, species and grade for each member.
9. Connection requirements for:
   9.1. Truss-to-girder-truss.
   9.2. Truss ply-to-ply.
   9.3. Field splices.
10. Calculated deflection ratio and/or maximum description for live and total load.
11. Maximum axial compression forces in the truss members to enable the building designer to design the size, connections and anchorage of the permanent continuous lateral bracing. Forces shall be shown on the truss drawing or on supplemental documents.
12. Required permanent truss member bracing location.

R502.12 Draftstopping required. Draftstopping shall be provided in accordance with Section R302.12.

R502.13 Fireblocking required. Fireblocking shall be provided in accordance with Section R302.11.

SECTION R503
FLOOR SHEATHING

R503.1 Lumber sheathing. Maximum allowable spans for lumber used as floor sheathing shall conform to Tables R503.1, R503.2.1.1(1) and R503.2.1.1(2).

TABLE R503.1
MINIMUM THICKNESS OF LUMBER FLOOR SHEATHING

JOIST OR BEAM SPACING (inches)	MINIMUM NET THICKNESS	
	Perpendicular to joist	Diagonal to joist
24	$^{11}/_{16}$	$^{3}/_{4}$
16	$^{5}/_{8}$	$^{5}/_{8}$
48[a]	$1^{1}/_{2}$ T & G	N/A
54[b]		
60[c]		

For SI: 1 inch = 25.4 mm, 1 pound per square inch = 6.895 kPa.
N/A = Not applicable.
a. For this support spacing, lumber sheathing shall have a minimum F_b of 675 and minimum E of 1,100,000 (see ANSI AWC NDS).
b. For this support spacing, lumber sheathing shall have a minimum F_b of 765 and minimum E of 1,400,000 (see ANSI AWC NDS).
c. For this support spacing, lumber sheathing shall have a minimum F_b of 855 and minimum E of 1,700,000 (see ANSI AWC NDS).

R503.1.1 End joints. End joints in lumber used as subflooring shall occur over supports unless end-matched lumber is used, in which case each piece shall bear on not less than two joists. Subflooring shall be permitted to be omitted where joist spacing does not exceed 16 inches (406 mm) and a 1-inch (25 mm) nominal tongue-and-groove wood strip flooring is applied perpendicular to the joists.

R503.2 Wood structural panel sheathing.

R503.2.1 Identification and grade. Wood structural panel sheathing used for structural purposes shall conform to DOC PS 1, DOC PS 2, CSA O437 or CSA O325. Panels shall be identified for grade, bond classification and Performance Category by a grade mark or certificate of inspection issued by an approved agency. The Performance Category value shall be used as the "nominal panel thickness" or "panel thickness" wherever referenced in this code

R503.2.1.1 Subfloor and combined subfloor underlayment. Where used as subflooring or combination subfloor underlayment, wood structural panels shall be of one of the grades specified in Table R503.2.1.1(1). Where sanded plywood is used as combination subfloor underlayment, the grade, bond classification, and Performance Category shall be as specified in Table R503.2.1.1(2).

TABLE R503.2.1.1(2)
ALLOWABLE SPANS FOR SANDED PLYWOOD COMBINATION SUBFLOOR UNDERLAYMENT[a]

IDENTIFICATION	SPACING OF JOISTS (inches)		
	16	20	24
Species group[b]	—	—	—
1	$^{1}/_{2}$	$^{5}/_{8}$	$^{3}/_{4}$
2, 3	$^{5}/_{8}$	$^{3}/_{4}$	$^{7}/_{8}$
4	$^{3}/_{4}$	$^{7}/_{8}$	1

For SI: 1 inch = 25.4 mm, 1 pound per square foot = 0.0479 kPa.
a. Plywood continuous over two or more spans and face grain perpendicular to supports. Unsupported edges shall be tongue-and-groove or blocked except where nominal $^{1}/_{4}$-inch-thick wood panel-type underlayment, fiber-cement underlayment or $^{3}/_{4}$-inch wood finish floor is used. Fiber-cement underlayment shall comply with ASTM C 1288 or ISO 8336 Category C. Allowable uniform live load at maximum span based on deflection of $^{1}/_{360}$ of span is 100 psf.
b. Applicable to all grades of sanded exterior-type plywood.

R503.2.2 Allowable spans. The maximum allowable span for wood structural panels used as subfloor or combination subfloor underlayment shall be as set forth in Table R503.2.1.1(1), or APA E30. The maximum span for sanded plywood combination subfloor underlayment shall be as set forth in Table R503.2.1.1(2).

R503.2.3 Installation. Wood structural panels used as subfloor or combination subfloor underlayment shall be attached to wood framing in accordance with Table R602.3(1) and shall be attached to cold-formed steel framing in accordance with Table R505.3.1(2).

R503.3 Particleboard.

R503.3.1 Identification and grade. Particleboard shall conform to ANSI A208.1 and shall be so identified by a grade *mark* or certificate of inspection issued by an *approved agency*.

R503.3.2 Floor underlayment. Particleboard floor underlayment shall conform to Type PBU and shall be not less than $^{1}/_{4}$ inch (6.4 mm) in thickness.

R503.3.3 Installation. Particleboard underlayment shall be installed in accordance with the recommendations of the manufacturer and attached to framing in accordance with Table R602.3(1).

TABLE R503.2.1.1(1)
ALLOWABLE SPANS AND LOADS FOR WOOD STRUCTURAL PANELS FOR ROOF AND SUBFLOOR SHEATHING AND COMBINATION SUBFLOOR UNDERLAYMENT[a, b, c]

SPAN RATING	MINIMUM NOMINAL PANEL THICKNESS (inch)	ALLOWABLE LIVE LOAD (psf)[h, l]		MAXIMUM SPAN (inches)		LOAD (pounds per square foot, at maximum span)		MAXIMUM SPAN (inches)
		SPAN @ 16″ o.c.	SPAN @ 24″ o.c.	With edge support[d]	Without edge support	Total load	Live load	
Sheathing[e]				Roof[f]				Subfloor[j]
16/0	$^3/_8$	30	—	16	16	40	30	0
20/0	$^3/_8$	50	—	20	20	40	30	0
24/0	$^3/_8$	100	30	24	20[g]	40	30	0
24/16	$^7/_{16}$	100	40	24	24	50	40	16
32/16	$^{15}/_{32}$, $^1/_2$	180	70	32	28	40	30	16[h]
40/20	$^{19}/_{32}$, $^5/_8$	305	130	40	32	40	30	20[h, i]
48/24	$^{23}/_{32}$, $^3/_4$	—	175	48	36	45	35	24
60/32	$^7/_8$	—	305	60	48	45	35	32
Underlayment, C-C plugged, single floor[e]				Roof[f]				Combination subfloor underlayment[k]
16 o.c.	$^{19}/_{32}$, $^5/_8$	100	40	24	24	50	40	16[i]
20 o.c.	$^{19}/_{32}$, $^5/_8$	150	60	32	32	40	30	20[i, j]
24 o.c.	$^{23}/_{32}$, $^3/_4$	240	100	48	36	35	25	24
32 o.c.	$^7/_8$	—	185	48	40	50	40	32
48 o.c.	$1^3/_{32}$, $1^1/_8$	—	290	60	48	50	40	48

For SI: 1 inch = 25.4 mm, 1 pound per square foot = 0.0479 kPa.

a. The allowable total loads were determined using a dead load of 10 psf. If the dead load exceeds 10 psf, then the live load shall be reduced accordingly.

b. Panels continuous over two or more spans with long dimension (strength axis) perpendicular to supports. Spans shall be limited to values shown because of possible effect of concentrated loads.

c. Applies to panels 24 inches or wider.

d. Lumber blocking, panel edge clips (one midway between each support, except two equally spaced between supports where span is 48 inches), tongue-and-groove panel edges, or other approved type of edge support.

e. Includes Structural I panels in these grades.

f. Uniform load deflection limitation: $^1/_{180}$ of span under live load plus dead load, $^1/_{240}$ of span under live load only.

g. Maximum span 24 inches for $^{15}/_{32}$-and $^1/_2$-inch panels.

h. Maximum span 24 inches where $^3/_4$-inch wood finish flooring is installed at right angles to joists.

i. Maximum span 24 inches where 1.5 inches of lightweight concrete or approved cellular concrete is placed over the subfloor.

j. Unsupported edges shall have tongue-and-groove joints or shall be supported with blocking unless minimum nominal $^1/_4$-inch-thick wood panel-type underlayment, fiber-cement underlayment with end and edge joints offset not less than 2 inches or $1^1/_2$ inches of lightweight concrete or approved cellular concrete is placed over the subfloor, or $^3/_4$-inch wood finish flooring is installed at right angles to the supports. Fiber-cement underlayment shall comply with ASTM C1288 or ISO 8336 Category C. Allowable uniform live load at maximum span, based on deflection of $^1/_{360}$ of span, is 100 psf.

k. Unsupported edges shall have tongue-and-groove joints or shall be supported by blocking unless nominal $^1/_4$-inch-thick wood panel-type underlayment, fiber-cement underlayment with end and edge joints offset not less than 2 inches or $^3/_4$-inch wood finish flooring is installed at right angles to the supports. Fiber-cement underlayment shall comply with ASTM C1288 or ISO 8336 Category C. Allowable uniform live load at maximum span, based on deflection of $^1/_{360}$ of span, is 100 psf, except panels with a span rating of 48 on center are limited to 65 psf total uniform load at maximum span.

l. Allowable live load values at spans of 16 inches on center and 24 inches on center taken from reference standard APA E30, APA Engineered Wood Construction Guide. Refer to reference standard for allowable spans not listed in the table.

SECTION R504
PRESSURE PRESERVATIVE-TREATED WOOD FLOORS (ON GROUND)

R504.1 General. Pressure preservative treated-wood *basement* floors and floors on ground shall be designed to withstand axial forces and bending moments resulting from lateral soil pressures at the base of the exterior walls and floor live and dead loads. Floor framing shall be designed to meet joist deflection requirements in accordance with Section R301.

R504.1.1 Unbalanced soil loads. Unless special provision is made to resist sliding caused by unbalanced lateral soil loads, wood *basement* floors shall be limited to applications where the differential depth of fill on opposite exterior foundation walls is 2 feet (610 mm) or less.

R504.1.2 Construction. Joists in wood *basement* floors shall bear tightly against the narrow face of studs in the foundation wall or directly against a band joist that bears on the studs. Plywood subfloor shall be continuous over lapped joists or over butt joints between in-line joists. Sufficient blocking shall be provided between joists to transfer lateral forces at the base of the end walls into the floor system.

R504.1.3 Uplift and buckling. Where required, resistance to uplift or restraint against buckling shall be provided by interior bearing walls or properly designed stub walls anchored in the supporting soil below.

R504.2 Site preparation. The area within the foundation walls shall have all vegetation, topsoil and foreign material removed, and any fill material that is added shall be free of vegetation and foreign material. The fill shall be compacted

to ensure uniform support of the pressure preservative treated-wood floor sleepers.

R504.2.1 Base. A minimum 4-inch-thick (102 mm) granular base of gravel having a maximum size of $^3/_4$ inch (19.1 mm) or crushed stone having a maximum size of $^1/_2$ inch (12.7 mm) shall be placed over the compacted earth.

R504.2.2 Moisture barrier. Polyethylene sheeting of minimum 6-mil (0.15 mm) thickness shall be placed over the granular base. Joints shall be lapped 6 inches (152 mm) and left unsealed. The polyethylene membrane shall be placed over the pressure preservative treated-wood sleepers and shall not extend beneath the footing plates of the exterior walls.

R504.3 Materials. Framing materials, including sleepers, joists, blocking and plywood subflooring, shall be pressure-preservative treated and dried after treatment in accordance with AWPA U1 (Commodity Specification A, Use Category 4B and Section 5.2), and shall bear the *label* of an accredited agency.

SECTION R505
COLD-FORMED STEEL FLOOR FRAMING

R505.1 Cold-formed steel floor framing. Elements shall be straight and free of any defects that would significantly affect structural performance. Cold-formed steel floor framing members shall be in accordance with the requirements of this section.

R505.1.1 Applicability limits. The provisions of this section shall control the construction of cold-formed steel floor framing for buildings not greater than 60 feet (18 288 mm) in length perpendicular to the joist span, not greater than 40 feet (12 192 mm) in width parallel to the joist span and less than or equal to three stories above grade plane. Cold-formed steel floor framing constructed in accordance with the provisions of this section shall be limited to sites where the ultimate design wind speed is less than 139 miles per hour (62 m/s), Exposure Category B or C, and the ground snow load is less than or equal to 70 pounds per square foot (3.35 kPa).

R505.1.2 In-line framing. Where supported by cold-formed steel framed walls in accordance with Section R603, cold-formed steel floor framing shall be constructed with floor joists located in-line with load-bearing studs located below the joists in accordance with Figure R505.1.2 and the tolerances specified as follows:

1. The maximum tolerance shall be $^3/_4$ inch (19.1 mm) between the centerline of the horizontal framing member and the centerline of the vertical framing member.
2. Where the centerline of the horizontal framing member and bearing stiffener are located to one side

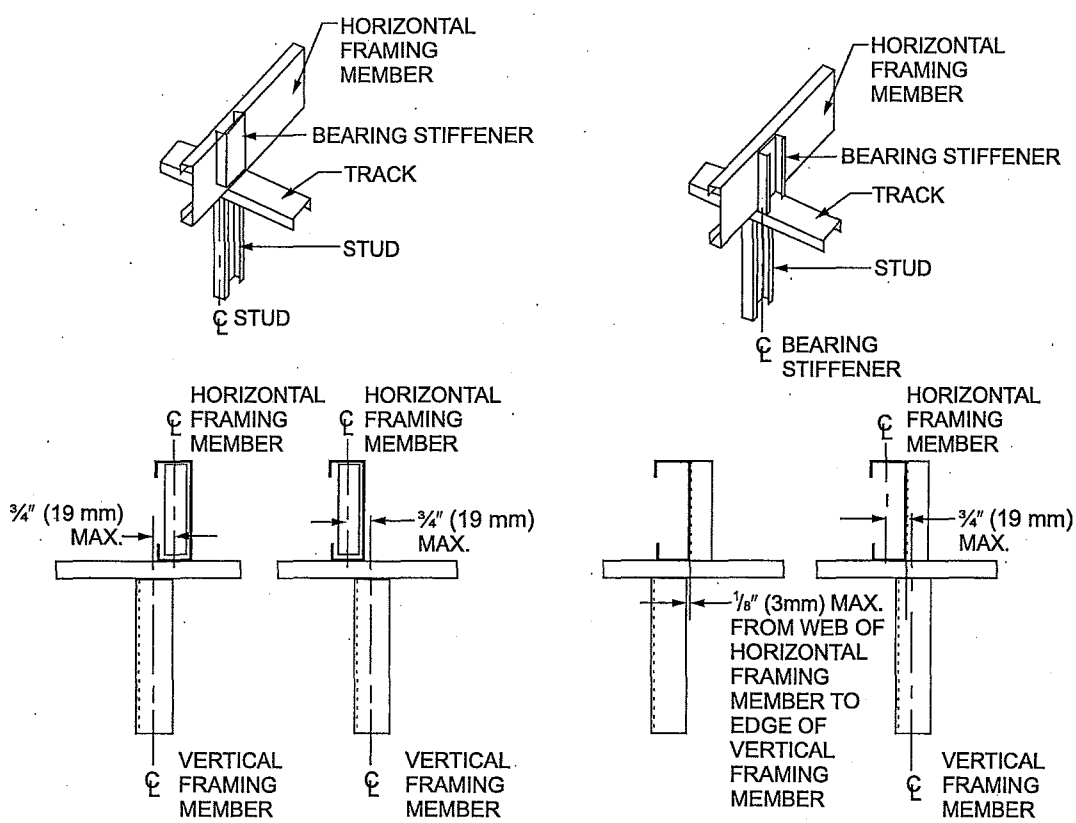

For SI: 1 inch = 25.4 mm.

FIGURE R505.1.2
IN-LINE FRAMING

of the centerline of the vertical framing member, the maximum tolerance shall be $^1/_8$ inch (3 mm) between the web of the horizontal framing member and the edge of the vertical framing member.

R505.1.3 Floor trusses. Cold-formed steel trusses shall be designed, braced and installed in accordance with AISI S100, Section D4. In the absence of specific bracing requirements, trusses shall be braced in accordance with accepted industry practices, such as the SBCA *Cold-Formed Steel Building Component Safety Information (CFSBCSI), Guide to Good Practice for Handling, Installing & Bracing of Cold-Formed Steel Trusses*. Truss members shall not be notched, cut or altered in any manner without an *approved* design.

R505.2 Structural framing. Load-bearing cold-formed steel floor framing members shall be in accordance with this section.

R505.2.1 Material. Load-bearing cold-formed steel framing members shall be cold formed to shape from structural quality sheet steel complying with the requirements of ASTM A 1003: Structural Grades 33 Type H and 50 Type H.

R505.2.2 Corrosion protection. Load-bearing cold-formed steel framing shall have a metallic coating complying with ASTM A 1003 and one of the following:

1. A minimum of G 60 in accordance with ASTM A 653.
2. A minimum of AZ 50 in accordance with ASTM A 792.

R505.2.3 Dimension, thickness and material grade. Load-bearing cold-formed steel floor framing members shall comply with Figure R505.2.3(1) and with the dimensional and thickness requirements specified in Table R505.2.3. Additionally, all C-shaped sections shall have a minimum flange width of 1.625 inches (41 mm) and a maximum flange width of 2 inches (51 mm). The minimum lip size for C-shaped sections shall be $^1/_2$ inch (12.7 mm). Track sections shall comply with Figure R505.2.3(2) and shall have a minimum flange width of $1^1/_4$ inch (32 mm). Minimum Grade 33 ksi steel shall be used wherever 33 mil and 43 mil thicknesses are specified. Minimum Grade 50 ksi steel shall be used wherever 54 and 68 mil thicknesses are specified.

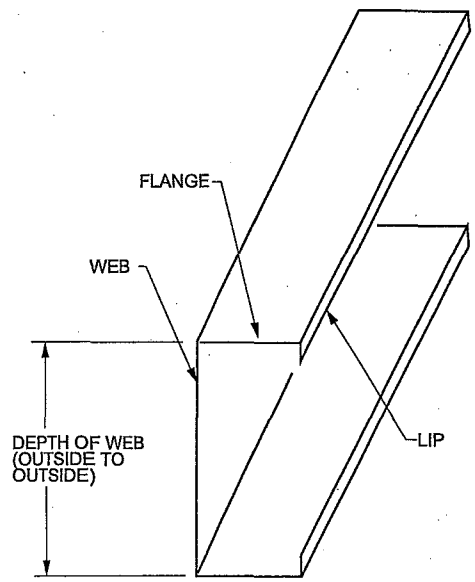

FIGURE R505.2.3(1)
C-SHAPED SECTION

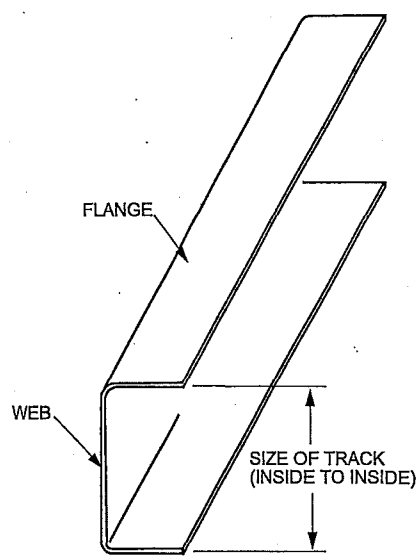

FIGURE R505.2.3(2)
TRACK SECTION

TABLE R505.2.3
COLD-FORMED STEEL JOIST SIZES AND THICKNESS

MEMBER DESIGNATION[a]	WEB DEPTH (inches)	MINIMUM BASE STEEL THICKNESS mil (inches)
550S162-t	5.5	33 (0.0329), 43 (0.0428), 54 (0.0538), 68 (0.0677)
800S162-t	8	33 (0.0329), 43 (0.0428), 54 (0.0538), 68 (0.0677)
1000S162-t	10	43 (0.0428), 54 (0.0538), 68 (0.0677)
1200S162-t	12	43 (0.0428), 54 (0.0538), 68 (0.0677)

For SI: 1 inch = 25.4 mm, 1 mil = 0.0254 mm.

a. The member designation is defined by the first number representing the member depth in 0.01 inch, the letter "S" representing a stud or joist member, the second number representing the flange width in 0.01 inch, and the letter "t" shall be a number representing the minimum base metal thickness in mils.

R505.2.4 Identification. Load-bearing cold-formed steel framing members shall have a legible *label*, stencil, stamp or embossment with the following information as a minimum:

1. Manufacturer's identification.
2. Minimum base steel thickness in inches (mm).
3. Minimum coating designation.
4. Minimum yield strength, in kips per square inch (ksi) (MPa).

R505.2.5 Fastening. Screws for steel-to-steel connections shall be installed with a minimum edge distance and center-to-center spacing of $^1/_2$ inch (12.7 mm), shall be self-drilling tapping, and shall conform to ASTM C 1513. Floor sheathing shall be attached to cold-formed steel joists with minimum No. 8 self-drilling tapping screws that conform to ASTM C 1513. Screws attaching floor sheathing to cold-formed steel joists shall have a minimum head diameter of 0.292 inch (7.4 mm) with countersunk heads and shall be installed with a minimum edge distance of $^3/_8$ inch (9.5 mm). Gypsum board ceilings shall be attached to cold-formed steel joists with minimum No. 6 screws conforming to ASTM C 954 or ASTM C 1513 with a bugle head style and shall be installed in accordance with Section R702. For all connections, screws shall extend through the steel a minimum of three exposed threads. All fasteners shall have rust-inhibitive coating suitable for the installation in which they are being used, or be manufactured from material not susceptible to corrosion.

R505.2.6 Web holes, web hole reinforcing and web hole patching. Web holes, web hole reinforcing, and web hole patching shall be in accordance with this section.

R505.2.6.1 Web holes. Web holes in floor joists shall comply with all of the following conditions:

1. Holes shall conform to Figure R505.2.6.1.
2. Holes shall be permitted only along the centerline of the web of the framing member.
3. Holes shall have a center-to-center spacing of not less than 24 inches (610 mm).
4. Holes shall have a web hole width not greater than 0.5 times the member depth, or $2^1/_2$ inches (64.5 mm).
5. Holes shall have a web hole length not exceeding $4^1/_2$ inches (114 mm).
6. Holes shall have a minimum distance between the edge of the bearing surface and the edge of the web hole of not less than 10 inches (254 mm).

Framing members with web holes not conforming to the above requirements shall be reinforced in accordance with Section R505.2.6.2, patched in accordance with Section R505.2.6.3 or designed in accordance with accepted engineering practices.

R505.2.6.2 Web hole reinforcing. Reinforcement of web holes in floor joists not conforming to the requirements of Section R505.2.6.1 shall be permitted if the hole is located fully within the center 40 percent of the span and the depth and length of the hole does not exceed 65 percent of the flat width of the web. The reinforcing shall be a steel plate or C-shape section with a hole that does not exceed the web hole size limitations of Section R505.2.6.1 for the member being reinforced. The steel reinforcing shall be the same thickness as the receiving member and shall extend not less than 1 inch (25 mm) beyond all edges of the hole. The steel reinforcing shall be fastened to the web of the receiving member with No. 8 screws spaced not more than 1 inch (25 mm) center-to-center along the edges of the patch with minimum edge distance of $^1/_2$ inch (12.7 mm).

R505.2.6.3 Hole patching. Patching of web holes in floor joists not conforming to the requirements in Section R505.2.6.1 shall be permitted in accordance with either of the following methods:

1. Framing members shall be replaced or designed in accordance with accepted engineering prac-

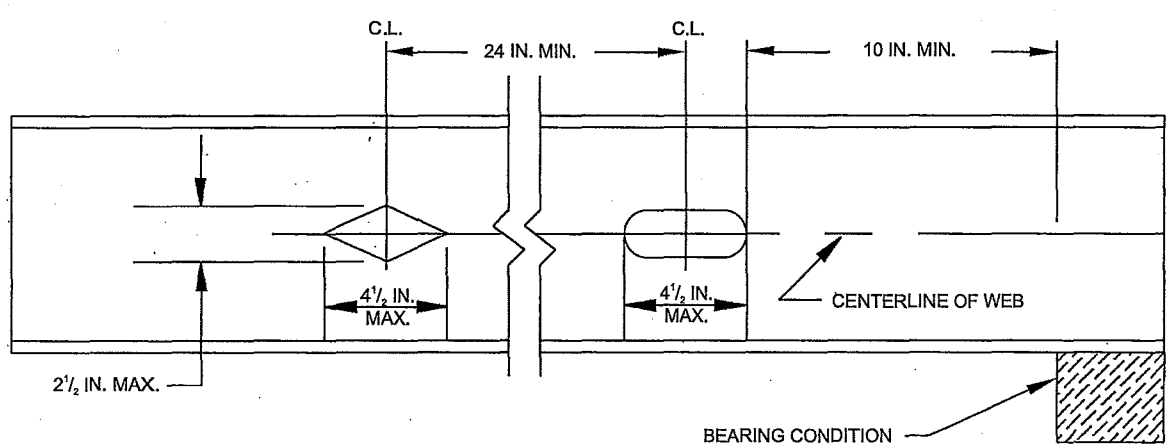

For SI: 1 inch = 25.4 mm.

FIGURE R505.2.6.1
FLOOR JOIST WEB HOLES

tices where web holes exceed the following size limits:

1.1. The depth of the hole, measured across the web, exceeds 70 percent of the flat width of the web.

1.2. The length of the hole, measured along the web, exceeds 10 inches (254 mm) or the depth of the web, whichever is greater.

2. Web holes not exceeding the dimensional requirements in Section R505.2.6.3, Item 1, shall be patched with a solid steel plate, stud section or track section in accordance with Figure R505.2.6.3. The steel patch shall, as a minimum, be of the same thickness as the receiving member and shall extend not less than 1 inch (25 mm) beyond all edges of the hole. The steel patch shall be fastened to the web of the receiving member with No. 8 screws spaced not more than 1 inch (25 mm) center-to-center along the edges of the patch with minimum edge distance of $^1/_2$ inch (12.7 mm).

R505.3 Floor construction. Cold-formed steel floors shall be constructed in accordance with this section.

R505.3.1 Floor to foundation or load-bearing wall connections. Cold-formed steel framed floors shall be anchored to foundations, wood sills or load-bearing walls in accordance with Table R505.3.1(1) and Figure R505.3.1(1), R505.3.1(2), R505.3.1(3), R505.3.1(4), R505.3.1(5) or R505.3.1(6). Anchor bolts shall be located not more than 12 inches (305 mm) from corners or the termination of bottom tracks. Continuous cold-formed steel joists supported by interior load-bearing walls shall be constructed in accordance with Figure R505.3.1(7). Lapped cold-formed steel joists shall be constructed in accordance with Figure R505.3.1(8). End floor joists constructed on foundation walls parallel to the joist span shall be doubled unless a C-shaped bearing stiffener, sized in accordance with Section R505.3.4, is installed web-to-web with the floor joist beneath each supported wall stud, as shown in Figure R505.3.1(9). Fastening of cold-formed steel joists to other framing members shall be in accordance with Section R505.2.5 and Table R505.3.1(2).

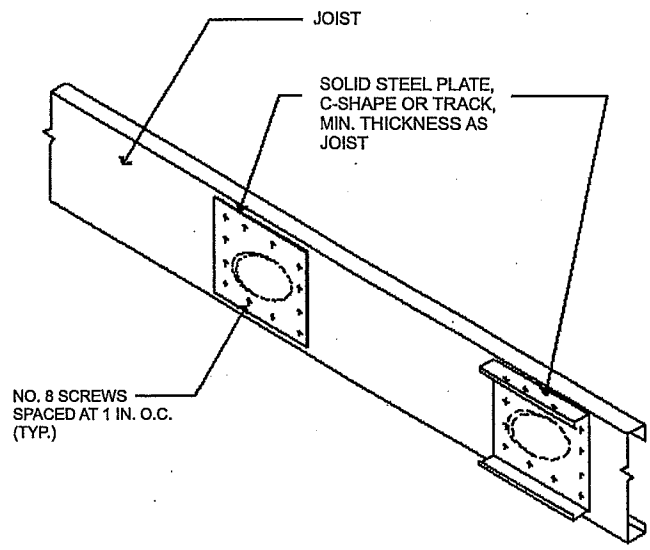

For SI: 1 inch = 25.4 mm.

FIGURE R505.2.6.3
FLOOR JOIST WEB HOLE PATCH

TABLE R505.3.1(1)
FLOOR TO FOUNDATION OR BEARING WALL CONNECTION REQUIREMENTS[a, b]

FRAMING CONDITION	BASIC ULTIMATE WIND SPEED (mph) AND EXPOSURE	
	110 mph Exposure Category C or less than 139 mph Exposure Category B	Less than 139 mph Exposure Category C
Floor joist to wall track of exterior wall in accordance with Figure R505.3.1(1)	2-No. 8 screws	3-No. 8 screws
Rim track or end joist to load-bearing wall top track in accordance with Figure R505.3.1(1)	1-No. 8 screw at 24 inches o.c.	1-No. 8 screw at 24 inches o.c.
Rim track or end joist to wood sill in accordance with Figure R505.3.1(2)	Steel plate spaced at 4 feet o.c. with 4-No. 8 screws and 4-10d or 6-8d common nails	Steel plate spaced at 2 feet o.c. with 4-No. 8 screws and 4-10d or 6-8d common nails
Rim track or end joist to foundation in accordance with Figure R505.3.1(3)	$^1/_2$ inch minimum diameter anchor bolt and clip angle spaced at 6 feet o.c. with 8-No. 8 screws	$^1/_2$ inch minimum diameter anchor bolt and clip angle spaced at 4 feet o.c. with 8-No. 8 screws
Cantilevered joist to foundation in accordance with Figure R505.3.1(4)	$^1/_2$ inch minimum diameter anchor bolt and clip angle spaced at 6 feet o.c. with 8-No. 8 screws	$^1/_2$ inch minimum diameter anchor bolt and clip angle spaced at 4 feet o.c. with 8-No. 8 screws
Cantilevered joist to wood sill in accordance with Figure R505.3.1(5)	Steel plate spaced at 4 feet o.c. with 4-No. 8 screws and 4-10d or 6-8d common nails	Steel plate spaced at 2 feet o.c. with 4-No. 8 screws and 4-10d or 6-8d common nails
Cantilevered joist to exterior load-bearing wall track in accordance with Figure R505.3.1(6)	2-No. 8 screws	3-No. 8 screws

For SI: 1 inch = 25.4 mm, 1 pound per square foot = 0.0479 kPa, 1 mile per hour = 0.447 m/s, 1 foot = 304.8 mm.

a. Anchor bolts are to be located not more than 12 inches from corners or the termination of bottom tracks such as at door openings or corners. Bolts extend a minimum of 15 inches into masonry or 7 inches into concrete. Anchor bolts connecting cold-formed steel framing to the foundation structure are to be installed so that the distance from the center of the bolt hole to the edge of the connected member is not less than one and one-half bolt diameters.

b. All screw sizes shown are minimum.

TABLE R505.3.1(2)
FLOOR FASTENING SCHEDULE[a]

DESCRIPTION OF BUILDING ELEMENTS	NUMBER AND SIZE OF FASTENERS	SPACING OF FASTENERS
Floor joist to track of an interior load-bearing wall in accordance with Figures R505.3.1(7) and R505.3.1(8)	2 No. 8 screws	Each joist
Floor joist to track at end of joist	2 No. 8 screws	One per flange or two per bearing stiffener
Subfloor to floor joists	No. 8 screws	6 in. o.c. on edges and 12 in. o.c. at intermediate supports

For SI: 1 inch = 25.4 mm.
a. All screw sizes shown are minimum.

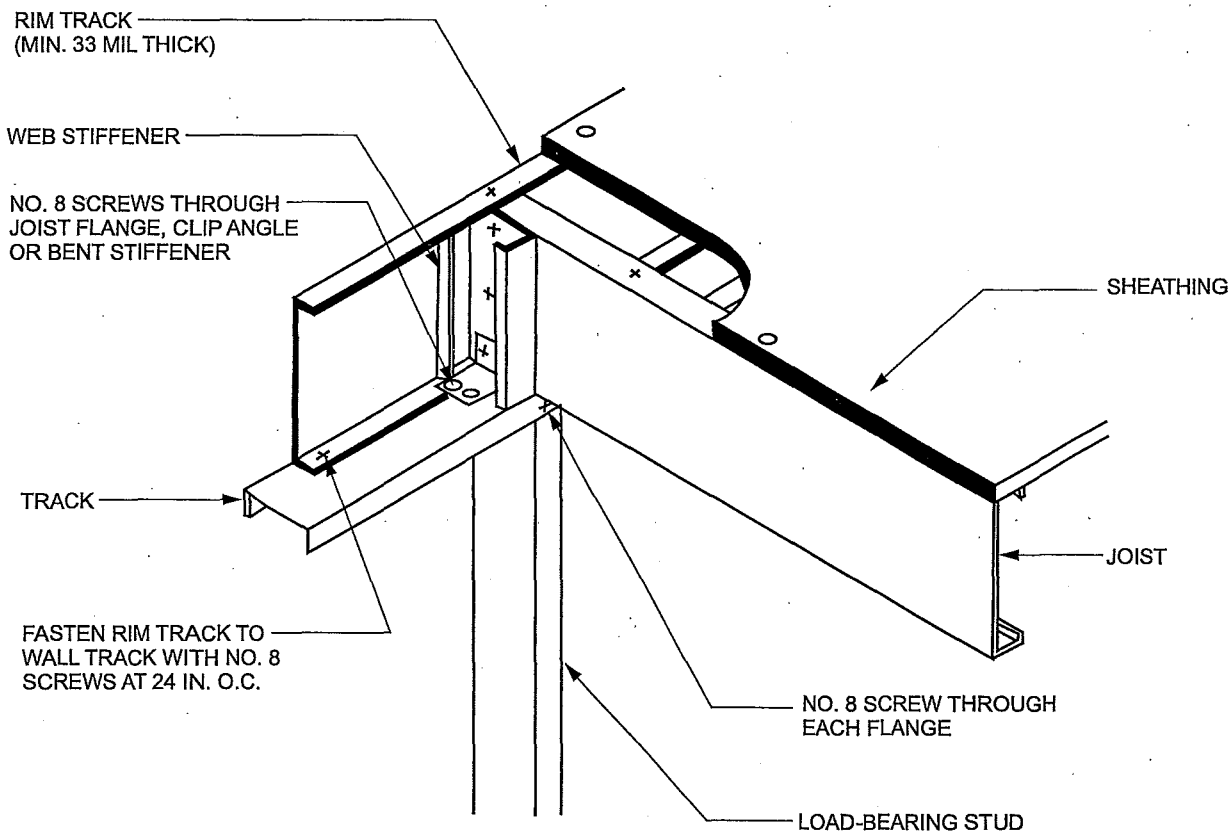

For SI: 1 mil = 0.0254 mm, 1 inch = 25.4 mm.

FIGURE 505.3.1(1)
FLOOR TO EXTERIOR LOAD-BEARING WALL STUD CONNECTION

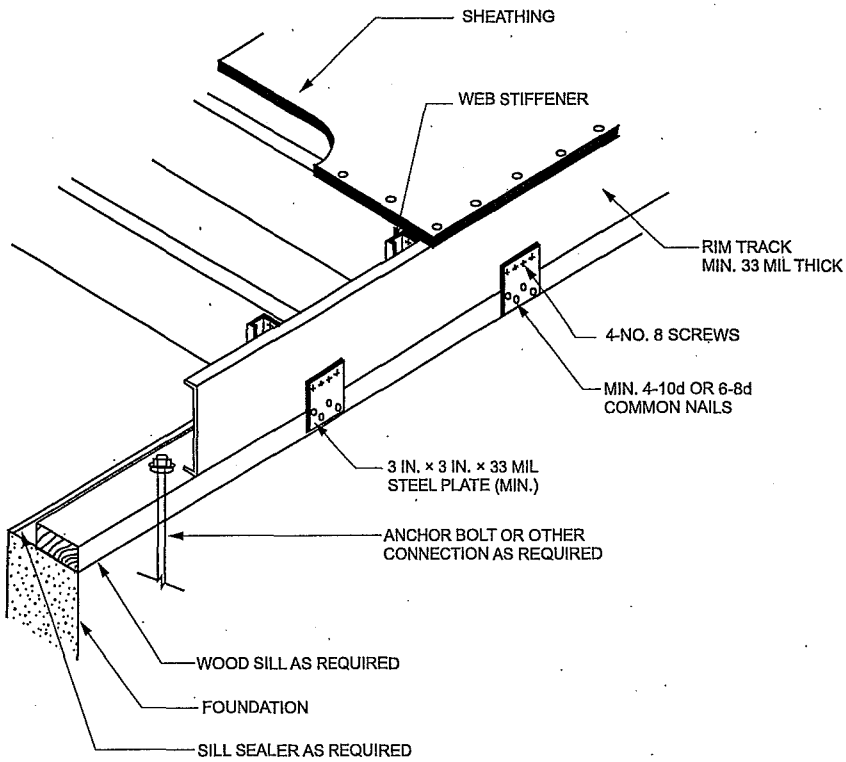

For SI: 1 mil = 0.0254 mm, 1 inch = 25.4 mm.

FIGURE R505.3.1(2)
FLOOR TO WOOD SILL CONNECTION

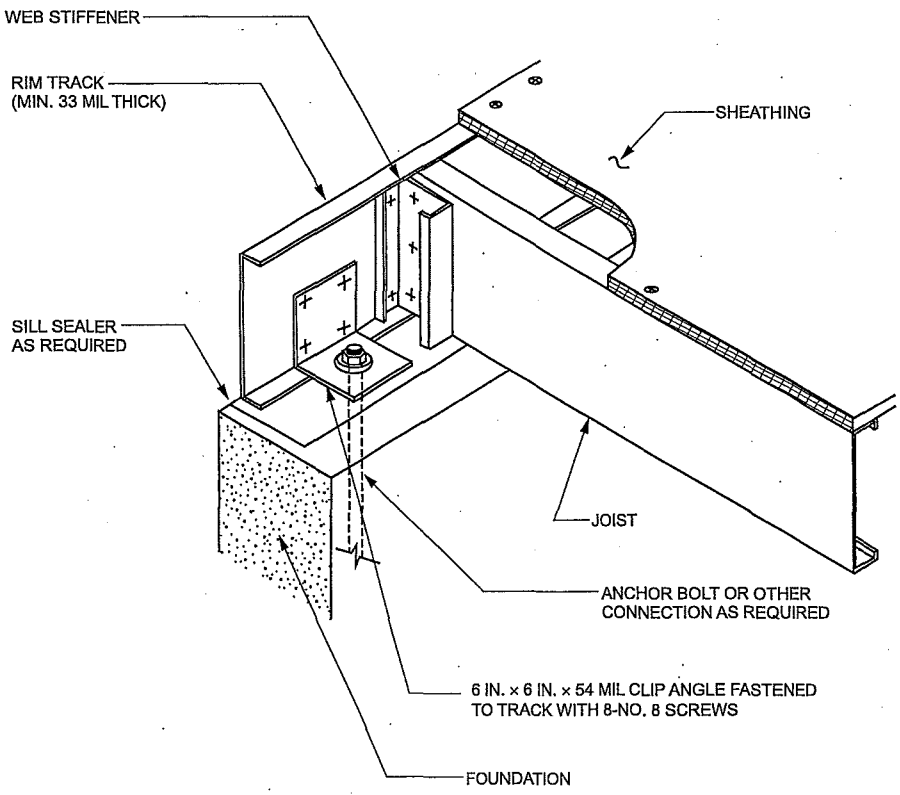

For SI: 1 mil = 0.0254 mm, 1 inch = 25.4 mm.

FIGURE R505.3.1(3)
FLOOR TO FOUNDATION CONNECTION

2605

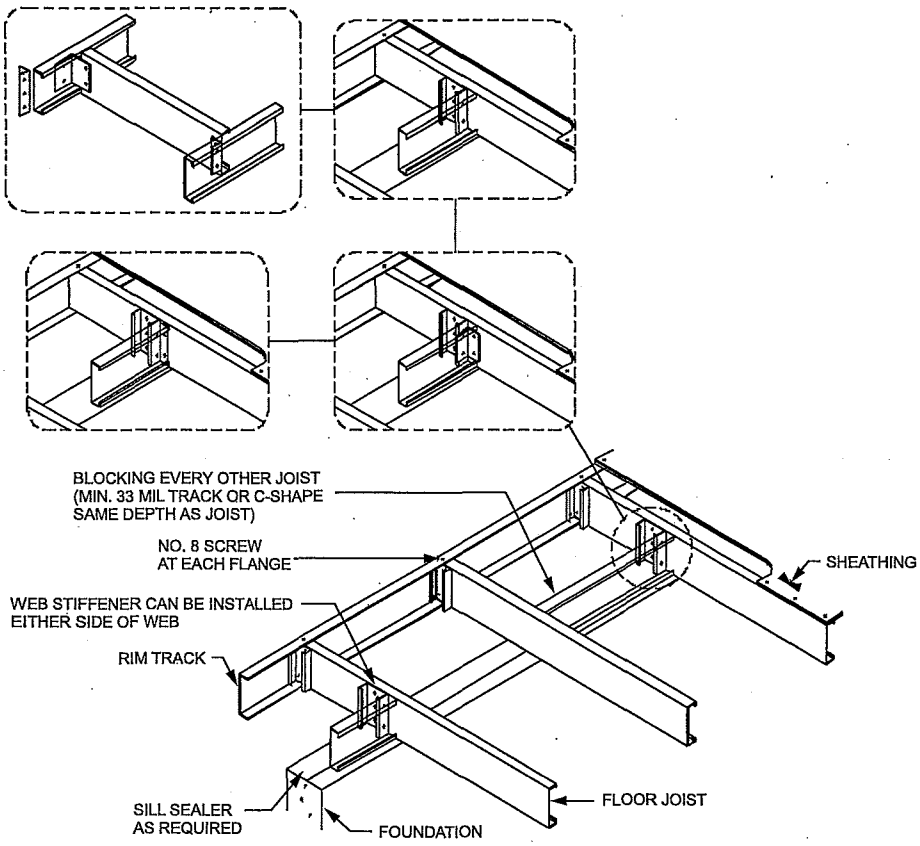

For SI: 1 mil = 0.0254 mm.

FIGURE R505.3.1(4)
CANTILEVERED FLOOR TO FOUNDATION CONNECTION

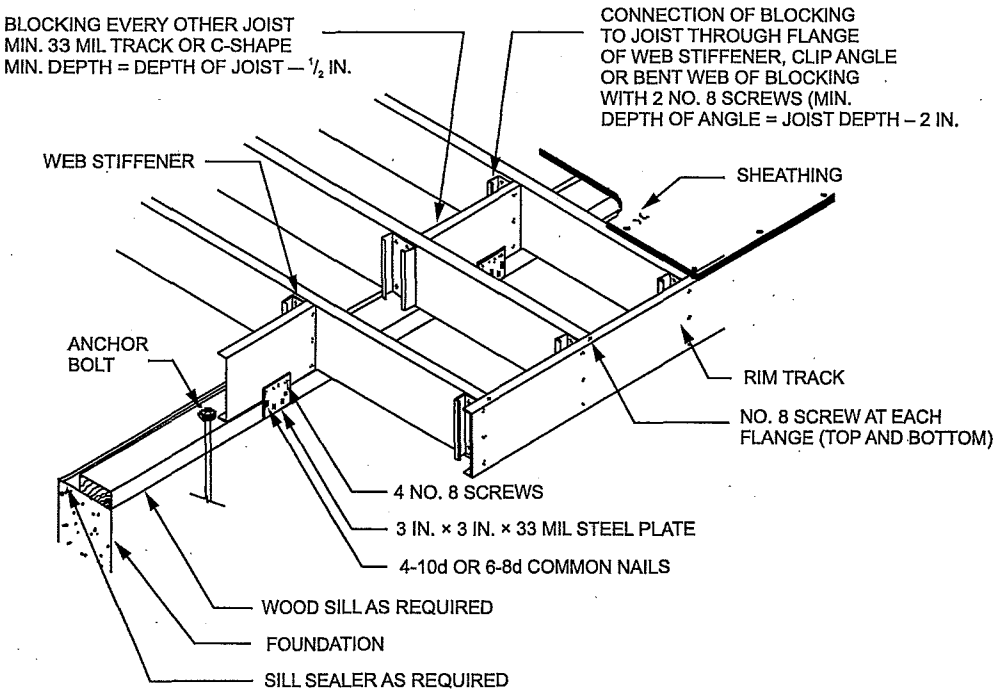

For SI: 1 mil = 0.0254 mm, 1 inch = 25.4 mm.

FIGURE R505.3.1(5)
CANTILEVERED FLOOR TO WOOD SILL CONNECTION

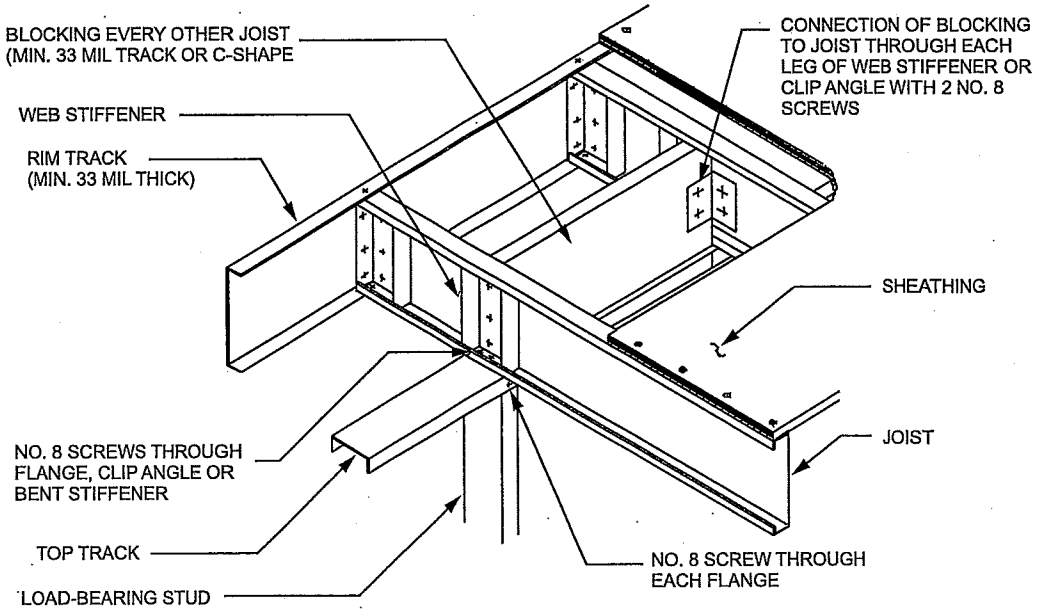

For SI: 1 mil = 0.0254 mm.

FIGURE R505.3.1(6)
CANTILEVERED FLOOR TO EXTERIOR LOAD-BEARING WALL CONNECTION

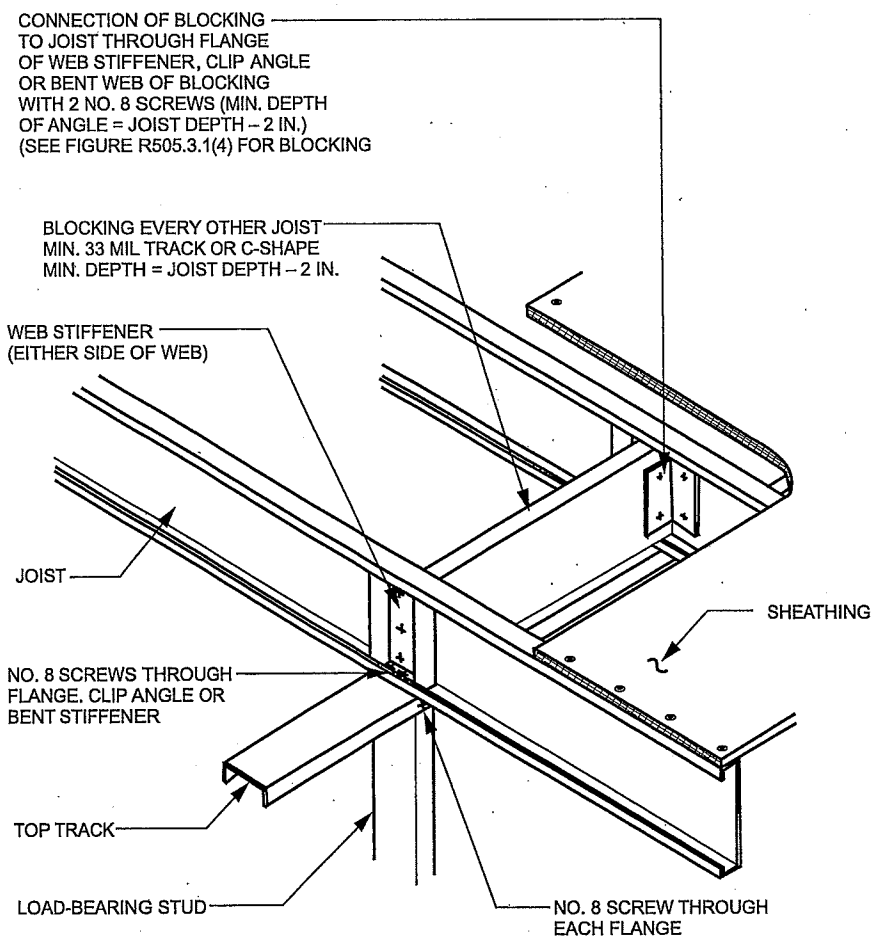

For SI: 1 mil = 0.0254 mm, 1 inch = 25.4 mm.

FIGURE R505.3.1(7)
CONTINUOUS SPAN JOIST SUPPORTED ON INTERIOR LOAD-BEARING WALL

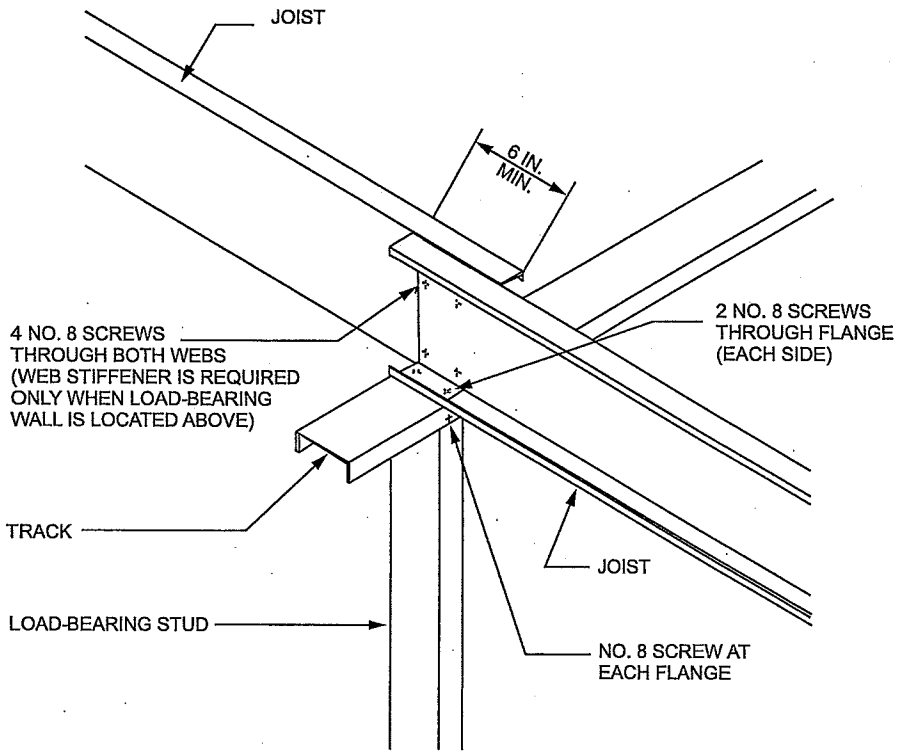

For SI: 1 inch = 25.4 mm.

FIGURE R505.3.1(8)
LAPPED JOISTS SUPPORTED ON INTERIOR LOAD-BEARING WALL

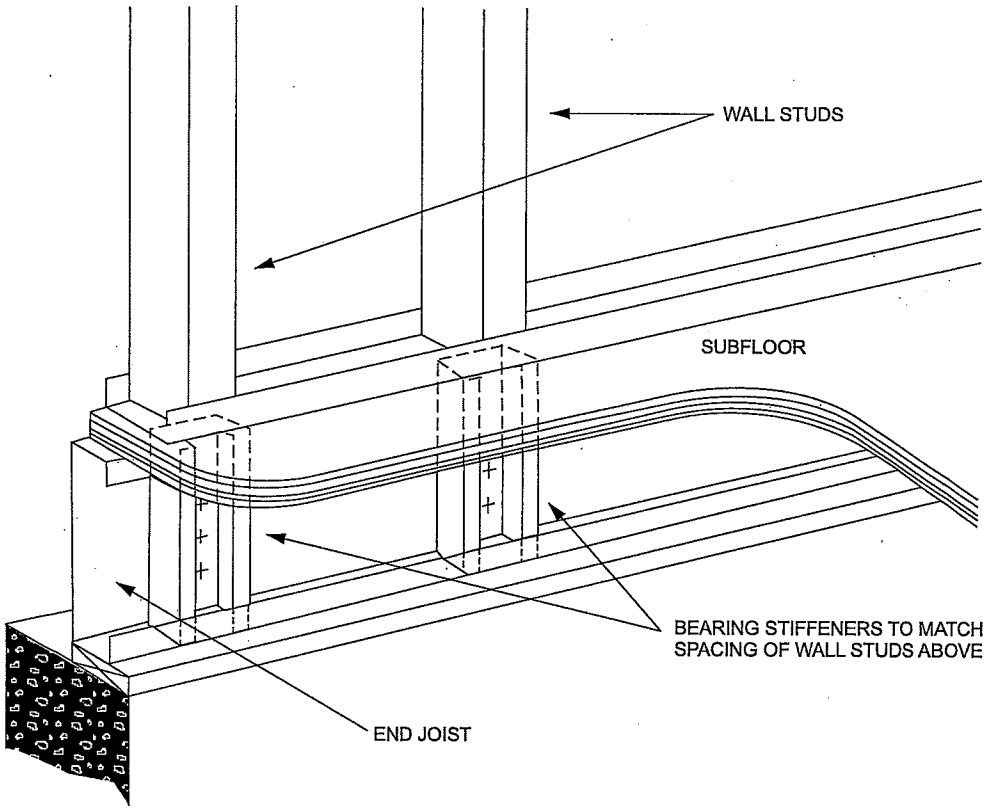

FIGURE R505.3.1(9)
BEARING STIFFENERS FOR END JOISTS

R505.3.2 Minimum floor joist sizes. Floor joist size and thickness shall be determined in accordance with the limits set forth in Table R505.3.2 for single or continuous spans. Where continuous joist members are used, the interior bearing supports shall be located within 2 feet (610 mm) of midspan of the cold-formed steel joists, and the individual spans shall not exceed the spans in Table R505.3.2. Floor joists shall have a bearing support length of not less than $1^1/_2$ inches (38 mm) for exterior wall supports and $3^1/_2$ inches (89 mm) for interior wall supports. Tracks shall be not less than 33 mils (0.84 mm) thick except when used as part of a floor header or trimmer in accordance with Section R505.3.8. Bearing stiffeners shall be installed in accordance with Section R505.3.4.

R505.3.3 Joist bracing and blocking. Joist bracing and blocking shall be in accordance with this section.

R505.3.3.1 Joist top flange bracing. The top flanges of cold-formed steel joists shall be laterally braced by the application of floor sheathing fastened to the joists in accordance with Section R505.2.5 and Table R505.3.1(2).

R505.3.3.2 Joist bottom flange bracing/blocking. Floor joists with spans that exceed 12 feet (3658 mm) shall have the bottom flanges laterally braced in accordance with one of the following:

1. Gypsum board installed with minimum No. 6 screws in accordance with Section R702.
2. Continuous steel straps installed in accordance with Figure R505.3.3.2(1). Steel straps shall be spaced at a maximum of 12 feet (3658 mm) on center and shall be at least $1^1/_2$ inches (38 mm) in width and 33 mils (0.84 mm) in thickness. Straps shall be fastened to the bottom flange of each joist with one No. 8 screw, fastened to blocking with two No. 8 screws, and fastened at each end (of strap) with two No. 8 screws. Blocking in accordance with Figure R505.3.3.2(1) or R505.3.3.2(2) shall be installed between joists at each end of the continuous strapping and at a maximum spacing of 12 feet (3658 mm) measured along the continuous strapping (perpendicular to the joist run). Blocking shall also be located at the termination of all straps. As an alternative to blocking at the ends, anchoring the strap to a stable building component with two No. 8 screws shall be permitted.

TABLE R505.3.2
ALLOWABLE SPANS FOR COLD-FORMED STEEL JOISTS—SINGLE OR CONTINUOUS SPANS[a, b, c, d, e]

JOIST DESIGNATION	30 PSF LIVE LOAD				40 PSF LIVE LOAD			
	Spacing (inches)				Spacing (inches)			
	12	16	19.2	24	12	16	19.2	24
550S162-33	11′-7″	10′-7″	9′-6″	8′-6″	10′-7″	9′-3″	8′-6″	7′-6″
550S162-43	12′-8″	11′-6″	10′-10″	10′-2″	11′-6″	10′-5″	9′-10″	9′-1″
550S162-54	13′-7″	12′-4″	11′-7″	10′-9″	12′-4″	11′-2″	10′-6″	9′-9″
550S162-68	14′-7″	13′-3″	12′-6″	11′-7″	13′-3″	12′-0″	11′-4″	10′-6″
800S162-33	15′-8″	13′-11″	12′-9″	11′-5″	14′-3″	12′-5″	11′-3″	9′-0″
800S162-43	17′-1″	15′-6″	14′-7″	13′-7″	15′-6″	14′-1″	13′-3″	12′-4″
800S162-54	18′-4″	16′-8″	15′-8″	14′-7″	16′-8″	15′-2″	14′-3″	13′-3″
800S162-68	19′-9″	17′-11″	16′-10″	15′-8″	17′-11″	16′-3″	15′-4″	14′-2″
1000S162-43	20′-6″	18′-8″	17′-6″	15′-8″	18′-8″	16′-11″	15′-6″	13′-11″
1000S162-54	22′-1″	20′-0″	18′-10″	17′-6″	20′-0″	18′-2″	17′-2″	15′-11″
1000S162-68	23′-9″	21′-7″	20′-3″	18′-10″	21′-7″	19′-7″	18′-5″	17′-1″
1200S162-43	23′-9″	20′-10″	19′-0″	16′-8″	21′-5″	18′-6″	16′-6″	13′-2″
1200S162-54	25′-9″	23′-4″	22′-0″	20′-1″	23′-4″	21′-3″	20′-0″	17′-10″
1200S162-68	27′-8″	25′-1″	23′-8″	21′-11″	25′-1″	22′-10″	21′-6″	21′-1″

For SI: 1 inch = 25.4 mm, 1 foot = 304.8 mm, 1 pound per square foot = 0.0479 kPa, 1 mil = 0.0254 mm.

a. Deflection criteria: $L/480$ for live loads, $L/240$ for total loads.

b. Floor dead load = 10 psf.

c. Table provides the maximum clear span in feet and inches.

d. Bearing stiffeners are to be installed at all support points and concentrated loads.

e. Minimum Grade 33 ksi steel shall be used for 33 mil and 43 mil thickness. Minimum Grade 50 ksi steel shall be used for 54 and 68 mil thickness.

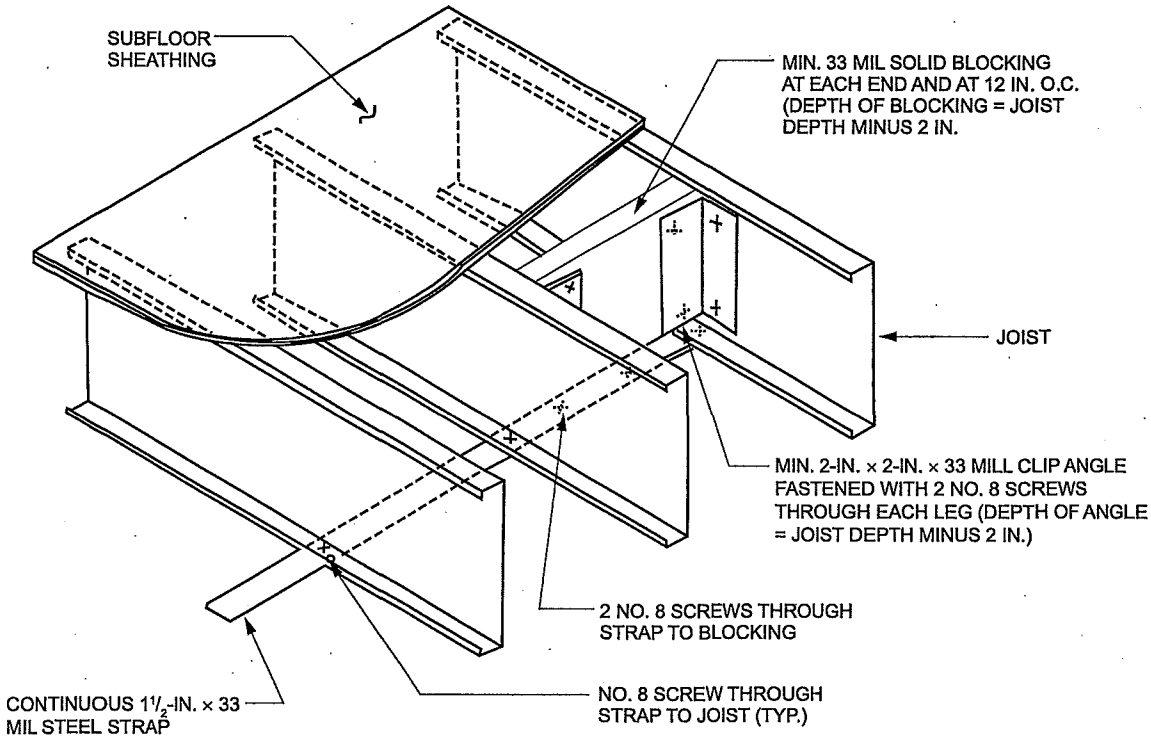

For SI: 1 mil = 0.0254, 1 inch = 25.4 mm.

FIGURE R505.3.3.2(1)
JOIST BLOCKING (SOLID)

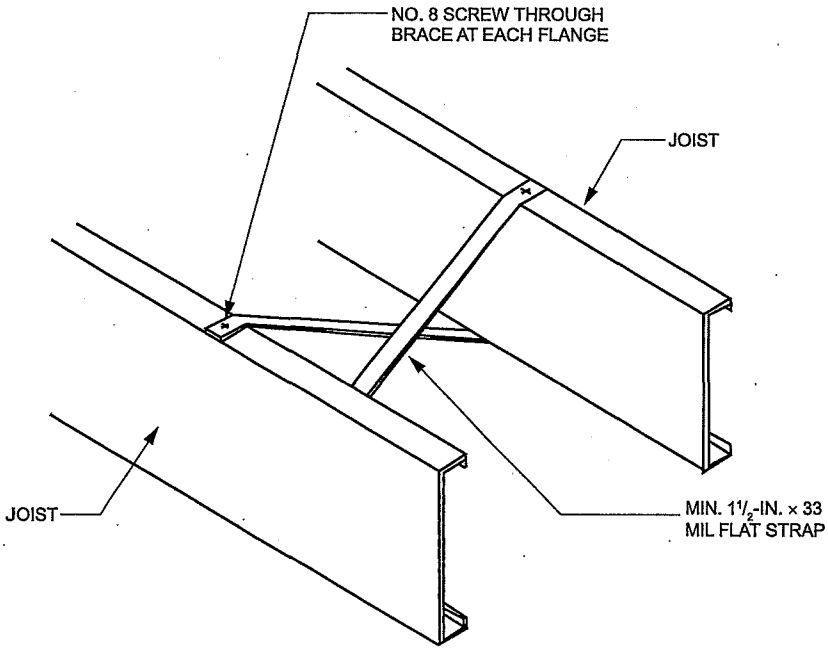

For SI: 1 mil = 0.0254, 1 inch = 25.4 mm.

FIGURE R505.3.3.2(2)
JOIST BLOCKING (STRAP)

2610

R505.3.3.3 Blocking at interior bearing supports. Blocking is not required for continuous back-to-back floor joists at bearing supports. Blocking shall be installed between every other joist for single continuous floor joists across bearing supports in accordance with Figure R505.3.1(7). Blocking shall consist of C-shape or track section with a minimum thickness of 33 mils (0.84 mm). Blocking shall be fastened to each adjacent joist through a 33-mil (0.84 mm) clip angle, bent web of blocking or flanges of web stiffeners with two No. 8 screws on each side. The minimum depth of the blocking shall be equal to the depth of the joist minus 2 inches (51 mm). The minimum length of the angle shall be equal to the depth of the joist minus 2 inches (51 mm).

R505.3.3.4 Blocking at cantilevers. Blocking shall be installed between every other joist over cantilever bearing supports in accordance with Figure R505.3.1(4), R505.3.1(5) or R505.3.1(6). Blocking shall consist of C-shape or track section with minimum thickness of 33 mils (0.84 mm). Blocking shall be fastened to each adjacent joist through bent web of blocking, 33 mil clip angle or flange of web stiffener with two No. 8 screws at each end. The depth of the blocking shall be equal to the depth of the joist. The minimum length of the angle shall be equal to the depth of the joist minus 2 inches (51 mm). Blocking shall be fastened through the floor sheathing and to the support with three No. 8 screws (top and bottom).

R505.3.4 Bearing stiffeners. Bearing stiffeners shall be installed at each joist bearing location in accordance with this section, except for joists lapped over an interior support not carrying a load-bearing wall above. Floor joists supporting jamb studs with multiple members shall have two bearing stiffeners in accordance with Figure R505.3.4(1). Bearing stiffeners shall be fabricated from a C-shaped, track or clip angle member in accordance with the one of following:

1. C-shaped bearing stiffeners:
   - 1.1. Where the joist is not carrying a load-bearing wall above, the bearing stiffener shall be a minimum 33 mil (0.84 mm) thickness.
   - 1.2. Where the joist is carrying a load-bearing wall above, the bearing stiffener shall be not less than the same designation thickness as the wall stud above.
2. Track bearing stiffeners:
   - 2.1. Where the joist is not carrying a load-bearing wall above, the bearing stiffener shall be a minimum 43 mil (1.09 mm) thickness.
   - 2.2. Where the joist is carrying a load-bearing wall above, the bearing stiffener shall be not less than one designation thickness greater than the wall stud above.

The minimum length of a bearing stiffener shall be the depth of member being stiffened minus $^3/_8$ inch (9.5 mm). Each bearing stiffener shall be fastened to the web of the member it is stiffening as shown in Figure R505.3.4(2).

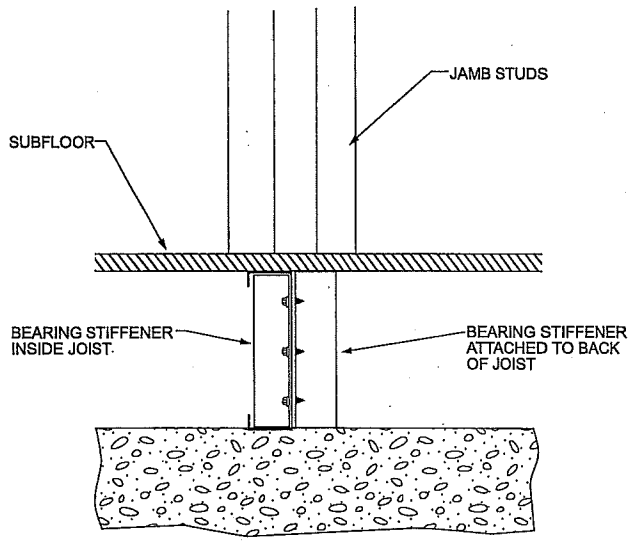

FIGURE R505.3.4(1)
BEARING STIFFENERS UNDER JAMB STUDS

R505.3.5 Cutting and notching. Flanges and lips of load-bearing cold-formed steel floor framing members shall not be cut or notched.

R505.3.6 Floor cantilevers. Floor cantilevers for the top floor of a two- or three-story building or the first floor of a one-story building shall not exceed 24 inches (610 mm). Cantilevers, not exceeding 24 inches (610 mm) and supporting two stories and roof (first floor of a two-story building), shall be permitted provided that all cantilevered joists are doubled (nested or back-to-back). The doubled cantilevered joists shall extend not less than 6 feet (1829 mm) toward the inside and shall be fastened with not less than two No. 8 screws spaced at 24 inches (610 mm) on center through the webs (for back-to-back) or flanges (for nested joists).

R505.3.7 Splicing. Joists and other structural members shall not be spliced. Splicing of tracks shall conform to Figure R505.3.7.

R505.3.8 Framing of floor openings. Openings in floors shall be framed with header and trimmer joists. Header joist spans shall not exceed 6 feet (1829 mm) or 8 feet (2438 mm) in length in accordance with Figure R505.3.8(1) or R505.3.8(2), respectively. Header and trimmer joists shall be fabricated from joist and track members, having a minimum size and thickness at least equivalent to the adjacent floor joists, and shall be installed in accordance with Figures R505.3.8(1), R505.3.8(2), R505.3.8(3) and R505.3.8(4). Each header joist shall be connected to trimmer joists with four 2-inch by 2-inch (51-mm by 51-mm) clip angles. Each clip angle shall be fastened to both the header and trimmer joists with four No. 8 screws, evenly spaced, through each leg of the clip angle. The clip angles shall have a thickness not less than that of the floor joist. Each track section for a built-up header or trimmer joist shall extend the full length of the joist (continuous).

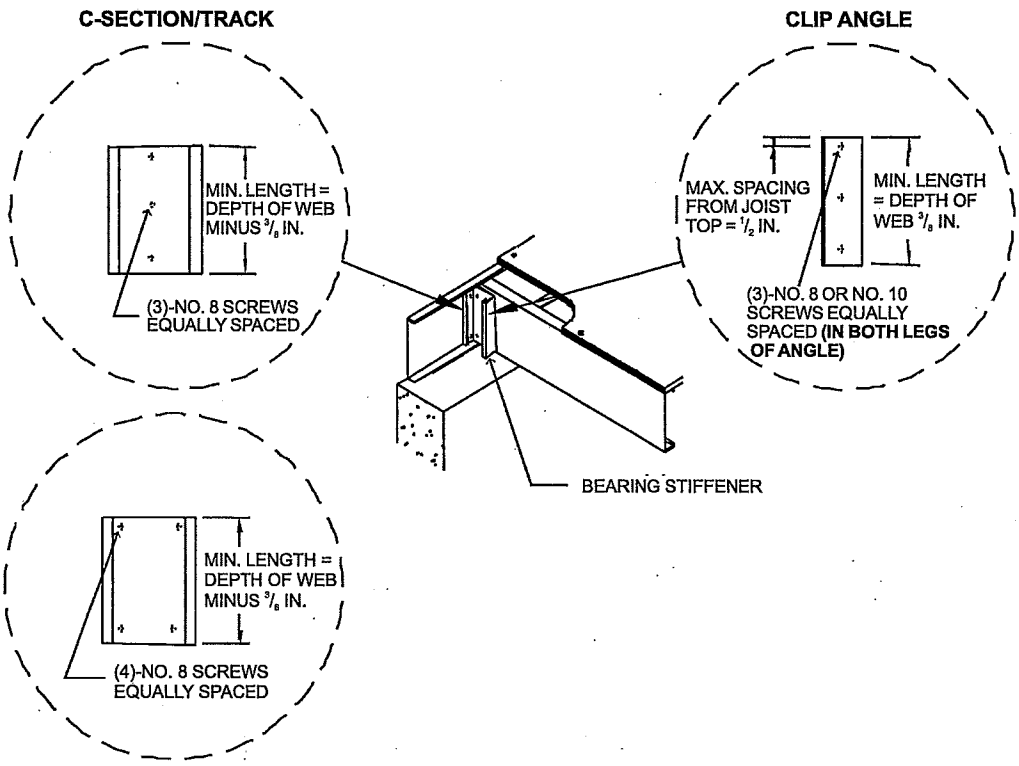

For SI: 1 inch = 25.4 mm.

FIGURE R505.3.4(2)
BEARING STIFFENER

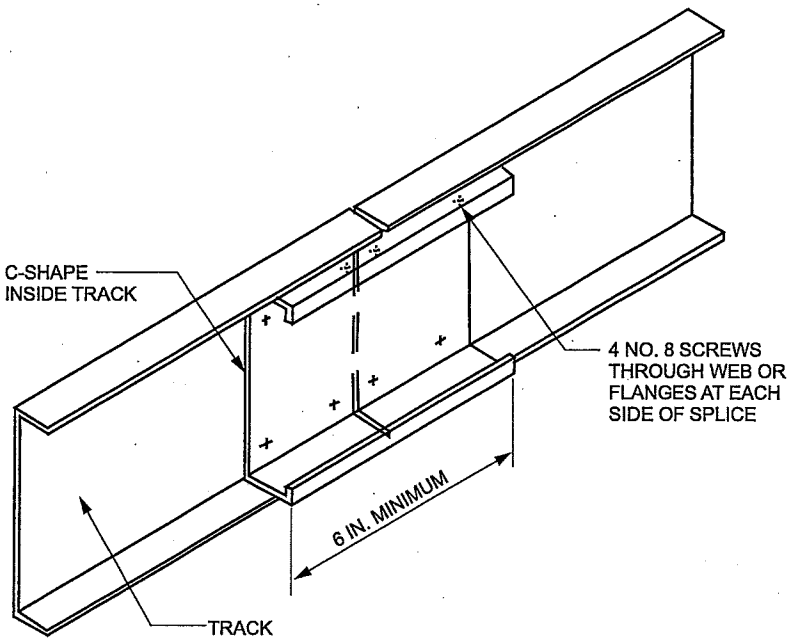

For SI: 1 inch = 25.4 mm.

FIGURE R505.3.7
TRACK SPLICE

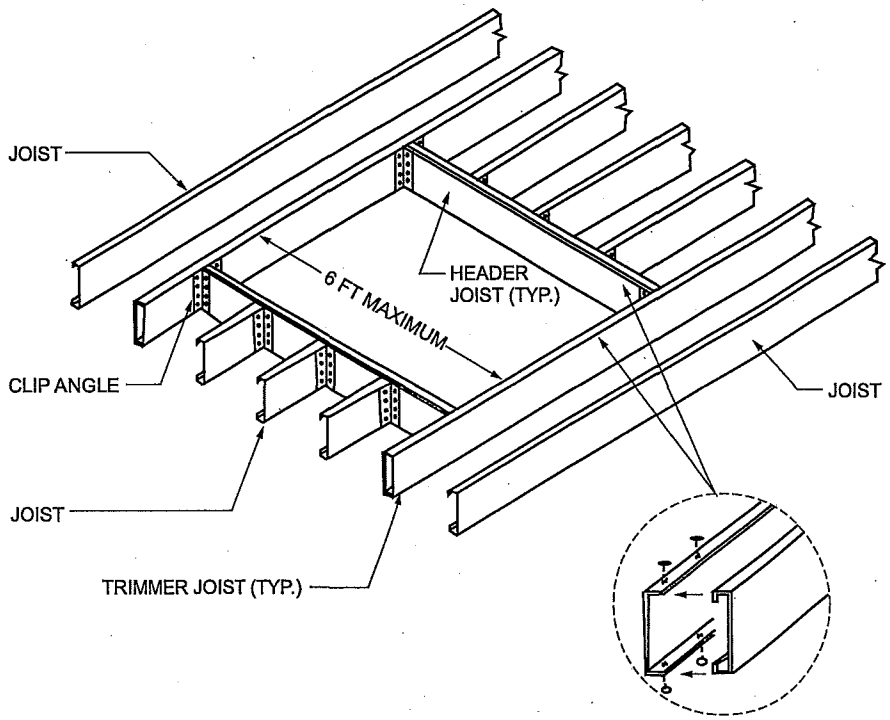

For SI: 1 foot = 304.8 mm.

FIGURE R505.3.8(1)
COLD-FORMED STEEL FLOOR CONSTRUCTION—6-FOOT FLOOR OPENING

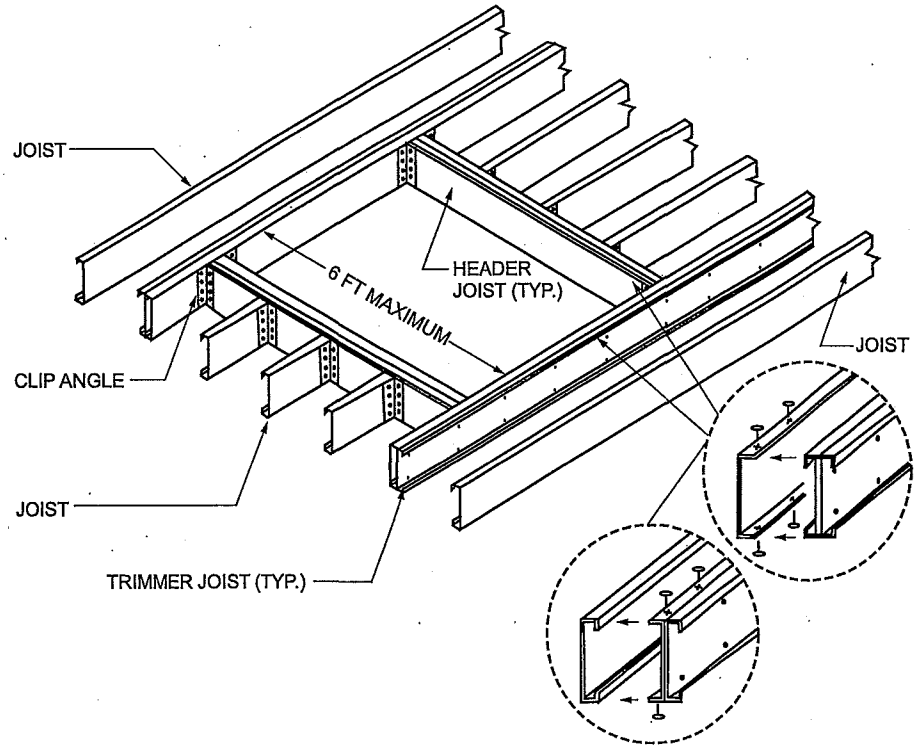

For SI: 1 foot = 304.8 mm.

FIGURE R505.3.8(2)
COLD-FORMED STEEL FLOOR CONSTRUCTION—8-FOOT FLOOR OPENING

2613

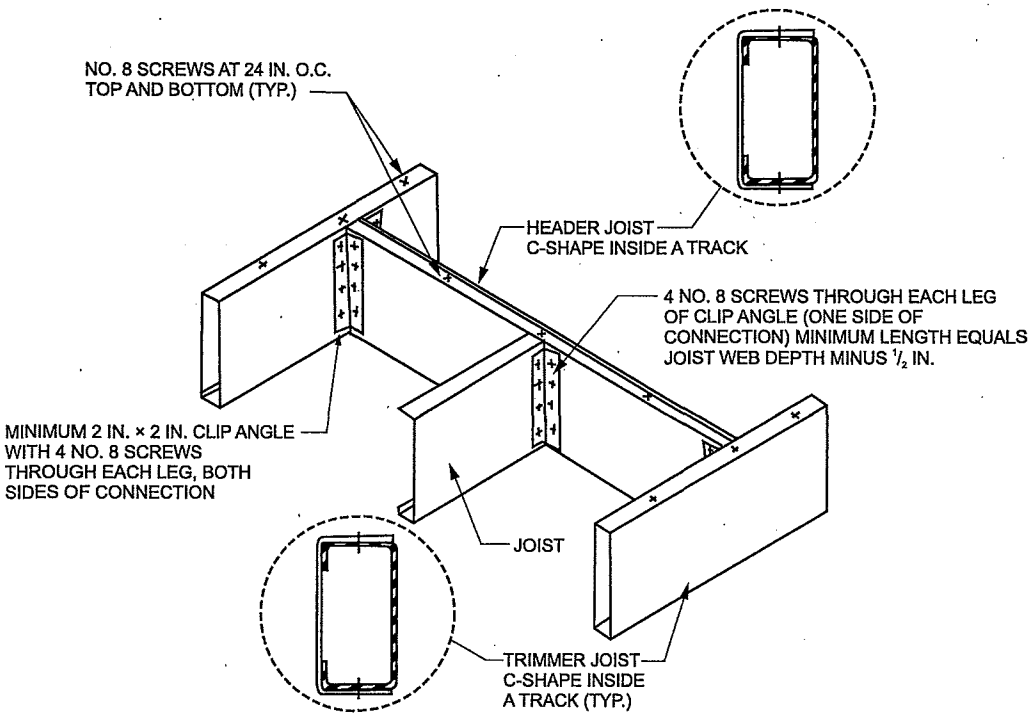

For SI: 1 inch = 25.4 mm, 1 foot = 304.8 mm.

FIGURE R505.3.8(3)
COLD-FORMED STEEL FLOOR CONSTRUCTION: FLOOR HEADER TO TRIMMER CONNECTION—6-FOOT OPENING

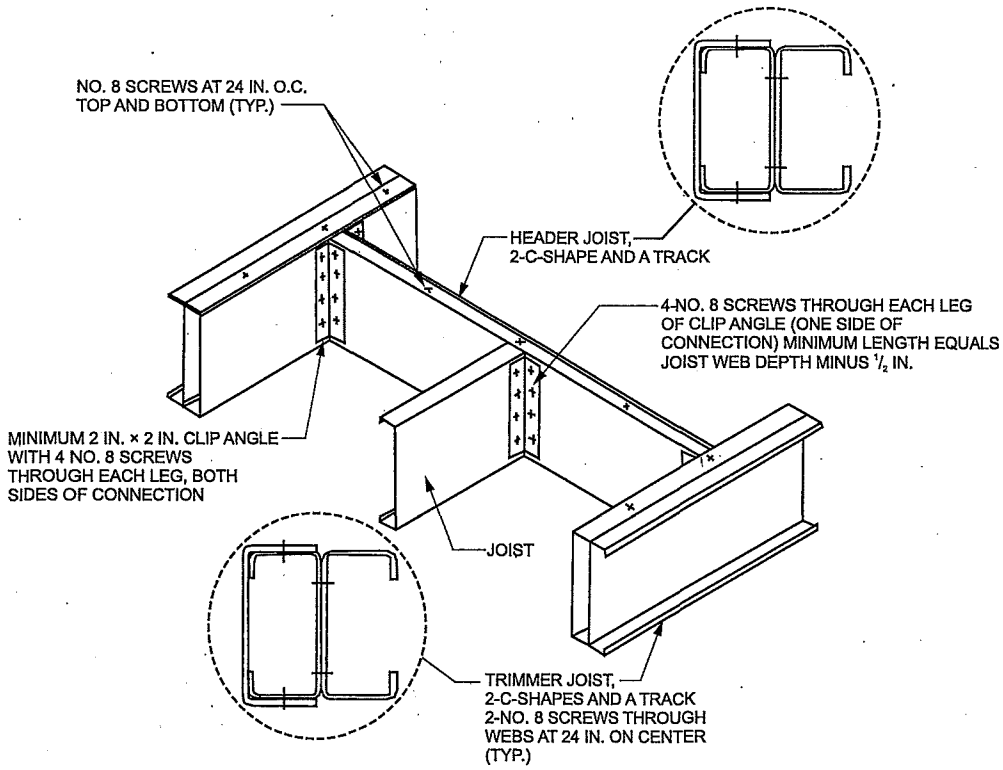

For SI: 1 inch = 25.4 mm, 1 foot = 304.8 mm.

FIGURE R505.3.8(4)
COLD-FORMED STEEL FLOOR CONSTRUCTION: FLOOR HEADER TO TRIMMER CONNECTION—8-FOOT OPENING

SECTION R506
CONCRETE FLOORS (ON GROUND)

R506.1 General. Concrete slab-on-ground floors shall be designed and constructed in accordance with the provisions of this section or ACI 332. Floors shall be a minimum $3^1/_2$ inches (89 mm) thick (for expansive soils, see Section R403.1.8). The specified compressive strength of concrete shall be as set forth in Section R402.2.

R506.2 Site preparation. The area within the foundation walls shall have all vegetation, top soil and foreign material removed.

R506.2.1 Fill. Fill material shall be free of vegetation and foreign material. The fill shall be compacted to ensure uniform support of the slab, and except where *approved*, the fill depths shall not exceed 24 inches (610 mm) for clean sand or gravel and 8 inches (203 mm) for earth.

R506.2.2 Base. A 4-inch-thick (102 mm) base course consisting of clean graded sand, gravel, crushed stone, crushed concrete or crushed blast-furnace slag passing a 2-inch (51 mm) sieve shall be placed on the prepared subgrade where the slab is below *grade*.

Exception: A base course is not required where the concrete slab is installed on well-drained or sand-gravel mixture soils classified as Group I according to the United Soil Classification System in accordance with Table R405.1.

R506.2.3 Vapor retarder. A 6-mil (0.006 inch; 152 μm) polyethylene or *approved* vapor retarder with joints lapped not less than 6 inches (152 mm) shall be placed between the concrete floor slab and the base course or the prepared subgrade where no base course exists.

Exception: The vapor retarder is not required for the following:

1. Garages, utility buildings and other unheated *accessory structures*.
2. For unheated storage rooms having an area of less than 70 square feet (6.5 m^2) and carports.
3. Driveways, walks, patios and other flatwork not likely to be enclosed and heated at a later date.
4. Where *approved* by the *building official*, based on local site conditions.

R506.2.4 Reinforcement support. Where provided in slabs-on-ground, reinforcement shall be supported to remain in place from the center to upper one-third of the slab for the duration of the concrete placement.

SECTION R507
EXTERIOR DECKS

R507.1 Decks. Wood-framed decks shall be in accordance with this section or Section R301 for materials and conditions not prescribed herein. Where supported by attachment to an exterior wall, decks shall be positively anchored to the primary structure and designed for both vertical and lateral loads.

Such attachment shall not be accomplished by the use of toenails or nails subject to withdrawal. Where positive connection to the primary building structure cannot be verified during inspection, decks shall be self-supporting. For decks with cantilevered framing members connections to exterior walls or other framing members shall be designed and constructed to resist uplift resulting from the full live load specified in Table R301.5 acting on the cantilevered portion of the deck.

R507.2 Deck ledger connection to band joist. Deck ledger connections to band joists shall be in accordance with this section, Tables R507.2 and R507.2.1, and Figures R507.2.1(1) and R507.2.1(2). For other grades, species, connection details and loading conditions, deck ledger connections shall be designed in accordance with Section R301.

R507.2.1 Ledger details. Deck ledgers installed in accordance with Section R507.2 shall be a minimum 2-inch by 8-inch (51 mm by 203 mm) nominal, pressure-preservative-treated southern pine, incised pressure-preservative-treated Hem-fir, or approved, naturally durable, No. 2 grade or better lumber. Deck ledgers installed in accordance with Section R507.2 shall not support concentrated loads from beams or girders. Deck ledgers shall not be supported on stone or masonry veneer.

R507.2.2 Band joist details. Band joists attached by a ledger in accordance with Section R507.2 shall be a minimum 2-inch-nominal (51 mm), solid-sawn, spruce-pine-fir lumber or a minimum 1-inch by $9^1/_2$-inch (25 mm × 241 mm) dimensional, Douglas fir, laminated veneer lumber. Band joists attached by a ledger in accordance with Section R507.2 shall be fully supported by a wall or sill plate below.

R507.2.3 Ledger to band joist fastener details. Fasteners used in deck ledger connections in accordance with Table R507.2 shall be hot-dipped galvanized or stainless steel and shall be installed in accordance with Table R507.2.1 and Figures R507.2.1(1) and R507.2.1(2).

R507.2.4 Deck lateral load connection. The lateral load connection required by Section R507.1 shall be permitted to be in accordance with Figure R507.2.3(1) or R507.2.3(2). Where the lateral load connection is provided in accordance with Figure R507.2.3(1), hold-down tension devices shall be installed in not less than two locations per deck, within 24 inches of each end of the deck. Each device shall have an allowable stress design capacity of not less than 1,500 pounds (6672 N). Where the lateral load connections are provided in accordance with Figure R507.2.3(2), the hold-down tension devices shall be installed in not less than four locations per deck, and each device shall have an allowable stress design capacity of not less than 750 pounds (3336 N).

R507.3 Plastic composite deck boards, stair treads, guards, or handrails. Plastic composite exterior deck boards, stair treads, guards and handrails shall comply with the requirements of ASTM D 7032 and the requirements of Section 507.3.

R507.3.1 Labeling. Plastic composite deck boards and stair treads, or their packaging, shall bear a label that indicates compliance to ASTM D 7032 and includes the allowable load and maximum allowable span determined

in accordance with ASTM D 7032. Plastic or composite handrails and guards, or their packaging, shall bear a label that indicates compliance to ASTM D 7032 and includes the maximum allowable span determined in accordance with ASTM D 7032.

R507.3.2 Flame spread index. Plastic composite deck boards, stair treads, guards, and handrails shall exhibit a flame spread index not exceeding 200 when tested in accordance with ASTM E 84 or UL 723 with the test specimen remaining in place during the test.

Exception: Plastic composites determined to be noncombustible.

R507.3.3 Decay resistance. Plastic composite deck boards, stair treads, guards and handrails containing wood, cellulosic or other biodegradable materials shall be decay resistant in accordance with ASTM D 7032.

R507.3.4 Termite resistance. Where required by Section 318, plastic composite deck boards, stair treads, guards and handrails containing wood, cellulosic or other biodegradable materials shall be termite resistant in accordance with ASTM D 7032.

507.3.5 Installation of plastic composites. Plastic composite deck boards, stair treads, guards and handrails shall be installed in accordance with this code and the manufacturer's instructions.

TABLE R507.2
DECK LEDGER CONNECTION TO BAND JOIST[a, b]
(Deck live load = 40 psf, deck dead load = 10 psf, snow load ≤ 40 psf)

CONNECTION DETAILS	JOIST SPAN						
	6′ and less	6′1″ to 8′	8′1″ to 10′	10′1″ to 12′	12′1″ to 14′	14′1″ to 16′	16′1″ to 18′
	On-center spacing of fasteners						
$^1/_2$-inch diameter lag screw with $^1/_2$-inch maximum sheathing[c, d]	30	23	18	15	13	11	10
$^1/_2$-inch diameter bolt with $^1/_2$-inch maximum sheathing[d]	36	36	34	29	24	21	19
$^1/_2$-inch diameter bolt with 1-inch maximum sheathing[e]	36	36	29	24	21	18	16

For SI: 1 inch = 25.4 mm, 1 foot = 304.8 mm, 1 pound per square foot = 0.0479 kPa.

a. Ledgers shall be flashed in accordance with Section R703.8 to prevent water from contacting the house band joist.

b. Snow load shall not be assumed to act concurrently with live load.

c. The tip of the lag screw shall fully extend beyond the inside face of the band joist.

d. Sheathing shall be wood structural panel or solid sawn lumber.

e. Sheathing shall be permitted to be wood structural panel, gypsum board, fiberboard, lumber or foam sheathing. Up to $^1/_2$-inch thickness of stacked washers shall be permitted to substitute for up to $^1/_2$ inch of allowable sheathing thickness where combined with wood structural panel or lumber sheathing.

TABLE 507.2.1
PLACEMENT OF LAG SCREWS AND BOLTS IN DECK LEDGERS AND BAND JOISTS

MINIMUM END AND EDGE DISTANCES AND SPACING BETWEEN ROWS				
	TOP EDGE	BOTTOM EDGE	ENDS	ROW SPACING
Ledger[a]	2 inches[d]	$^3/_4$ inch	2 inches[b]	$1^5/_8$ inches[b]
Band Joist[c]	$^3/_4$ inch	2 inches	2 inches[b]	$1^5/_8$ inches[b]

For SI: 1 inch = 25.4 mm.

a. Lag screws or bolts shall be staggered from the top to the bottom along the horizontal run of the deck ledger in accordance with Figure R507.2.1(1).

b. Maximum 5 inches.

c. For engineered rim joists, the manufacturer's recommendations shall govern.

d. The minimum distance from bottom row of lag screws or bolts to the top edge of the ledger shall be in accordance with Figure R507.2.1(1).

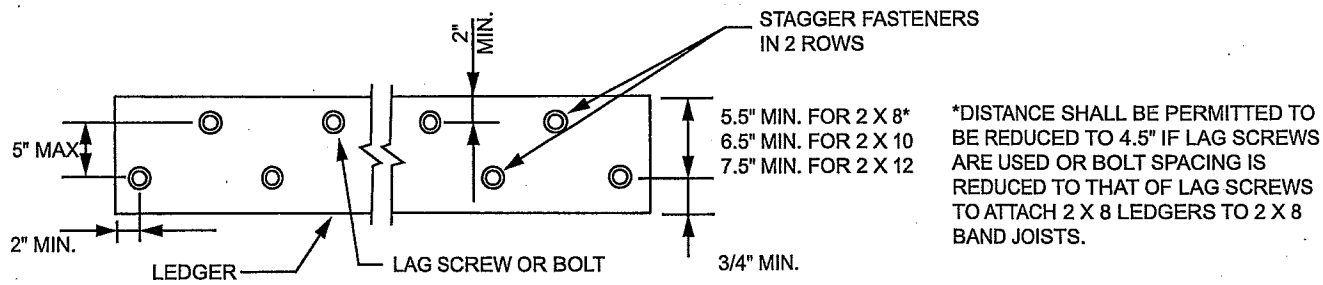

For SI: 1 inch = 25.4 mm.

FIGURE R507.2.1(1)
PLACEMENT OF LAG SCREWS AND BOLTS IN LEDGERS

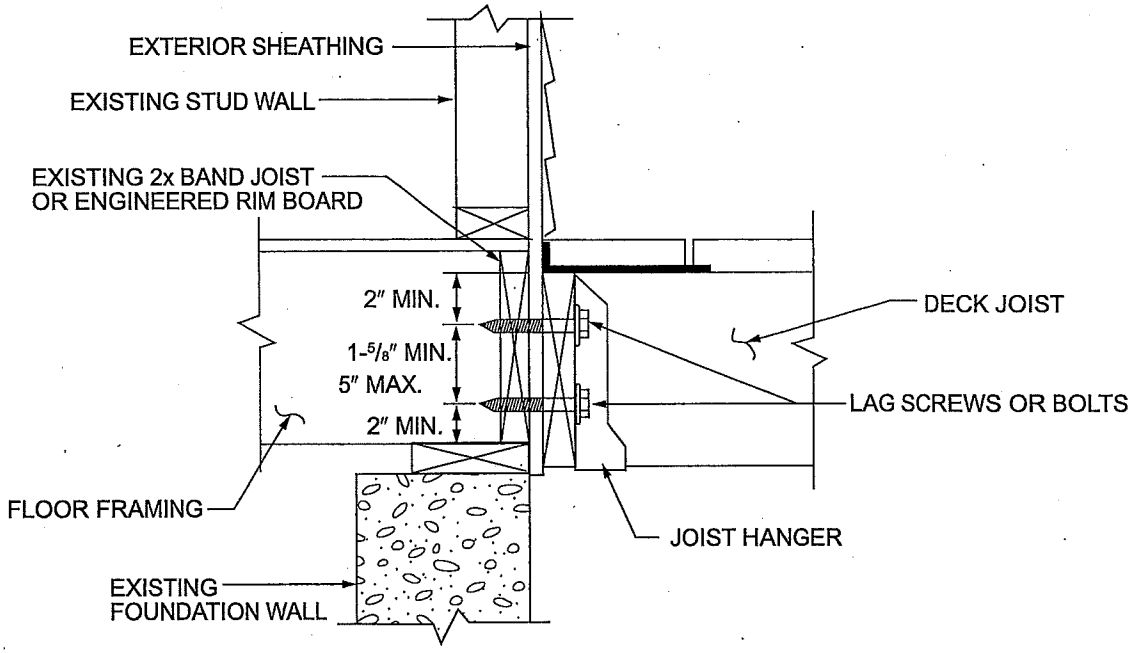

For SI: 1 inch = 25.4 mm.

FIGURE R507.2.1(2)
PLACEMENT OF LAG SCREWS AND BOLTS IN BAND JOISTS

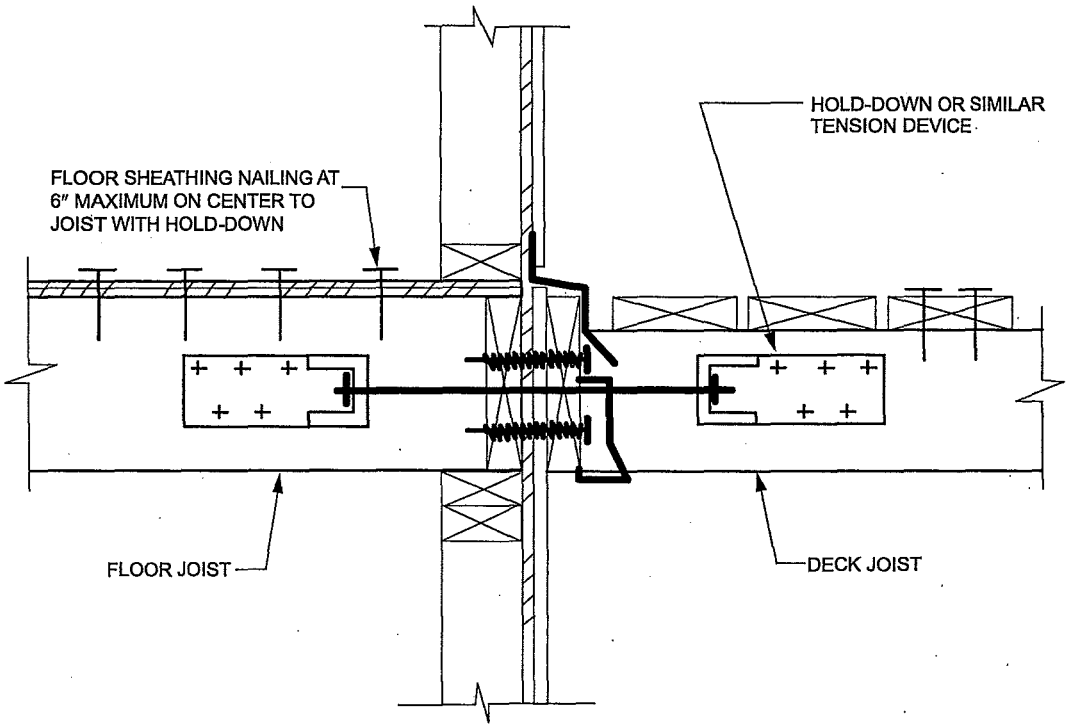

For SI: 1 inch = 25.4 mm.

FIGURE 507.2.3(1)
DECK ATTACHMENT FOR LATERAL LOADS

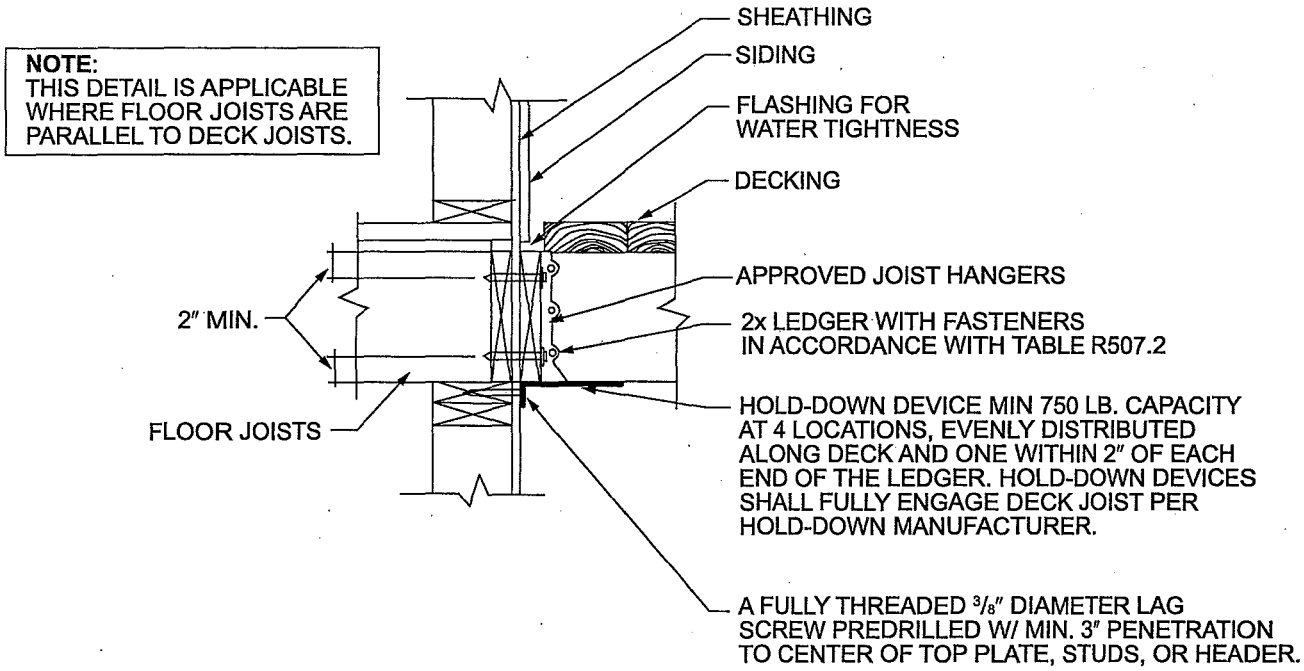

For SI: 1 inch = 25.4 mm, 1 foot = 304.8 mm.

FIGURE R507.2.3(2)
DECK ATTACHMENT FOR LATERAL LOADS

R507.4 Decking. Maximum allowable spacing for joists supporting decking shall be in accordance with Table R507.4. Wood decking shall be attached to each supporting member with not less than (2) 8d threaded nails or (2) No. 8 wood screws.

R507.5 Deck joists. Maximum allowable spans for wood deck joists, as shown in Figure R507.5, shall be in accordance with Table R507.5. Deck joists shall be permitted to cantilever not greater than one-fourth of the actual, adjacent joist span.

R507.5.1 Lateral restraint at supports. Joist ends and bearing locations shall be provided with lateral restraint to prevent rotation. Where lateral restraint is provided by joist hangers or blocking between joists, their depth shall equal not less than 60 percent of the joist depth. Where lateral restraint is provided by rim joists, they shall be secured to the end of each joist with not less than (3) 10d (3-inch × 0.128-inch) nails or (3) No. 10 × 3-inch (76 mm) long wood screws.

TABLE R507.4
MAXIMUM JOIST SPACING

MATERIAL TYPE AND NOMINAL SIZE	MAXIMUM ON-CENTER JOIST SPACING	
	Perpendicular to joist	Diagonal to joist[a]
$1^1/_4$-inch-thick wood	16 inches	12 inches
2-inch-thick wood	24 inches	16 inches
Plastic composite	In accordance with Section R507.3	In accordance with Section R507.3

For SI: 1 inch = 25.4 mm, 1 foot = 304.8 mm, 1 degree = 0.01745 rad.

a. Maximum angle of 45 degrees from perpendicular for wood deck boards

TABLE R507.5
DECK JOIST SPANS FOR COMMON LUMBER SPECIES[f] (ft. - in.)

SPECIES[a]	SIZE	SPACING OF DECK JOISTS WITH NO CANTILEVER[b] (inches)			SPACING OF DECK JOISTS WITH CANTILEVERS[c] (inches)		
		12	16	24	12	16	24
Southern pine	2 × 6	9-11	9-0	7-7	6-8	6-8	6-8
	2 × 8	13-1	11-10	9-8	10-1	10-1	9-8
	2 × 10	16-2	14-0	11-5	14-6	14-0	11-5
	2 × 12	18-0	16-6	13-6	18-0	16-6	13-6
Douglas fir-larch[d], hem-fir[d] spruce-pine-fir[d]	2 × 6	9-6	8-8	7-2	6-3	6-3	6-3
	2 × 8	12-6	11-1	9-1	9-5	9-5	9-1
	2 × 10	15-8	13-7	11-1	13-7	13-7	11-1
	2 × 12	18-0	15-9	12-10	18-0	15-9	12-10
Redwood, western cedars, ponderosa pine[e], red pine[e]	2 × 6	8-10	8-0	7-0	5-7	5-7	5-7
	2 × 8	11-8	10-7	8-8	8-6	8-6	8-6
	2 × 10	14-11	13-0	10-7	12-3	12-3	10-7
	2 × 12	17-5	15-1	12-4	16-5	15-1	12-4

For SI: 1 inch = 25.4 mm, 1 foot = 304.8 mm, 1 pound per square foot = 0.0479 kPa, 1 pound = 0.454 kg.

a. No. 2 grade with wet service factor.

b. Ground snow load, live load = 40 psf, dead load = 10 psf, L/Δ = 360.

c. Ground snow load, live load = 40 psf, dead load = 10 psf, L/Δ = 360 at main span, L/Δ = 180 at cantilever with a 220-pound point load applied to end.

d. Includes incising factor.

e. Northern species with no incising factor

f. Cantilevered spans not exceeding the nominal depth of the joist are permitted.

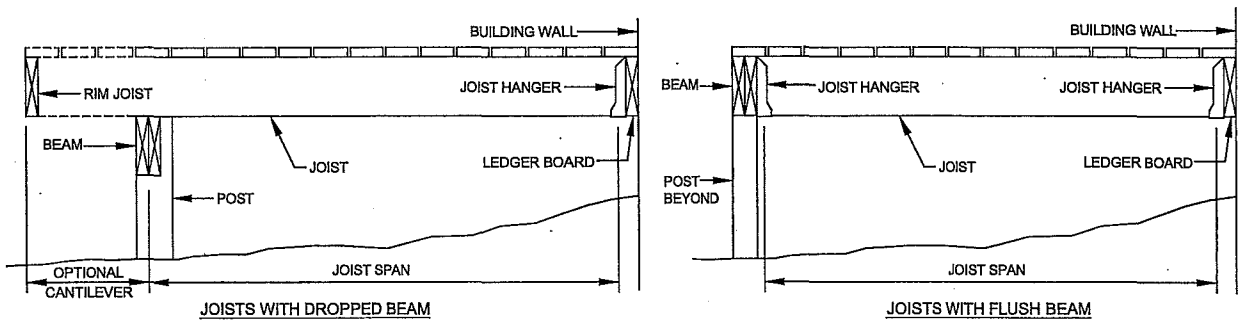

FIGURE R507.5
TYPICAL DECK JOIST SPANS

2619

R507.6 Deck Beams. Maximum allowable spans for wood deck beams, as shown in Figure R507.6, shall be in accordance with Table R507.6. Beam plies shall be fastened with two rows of 10d (3-inch × 0.128-inch) nails minimum at 16 inches (406 mm) on center along each edge. Beams shall be permitted to cantilever at each end up to one-fourth of the actual beam span. Splices of multispan beams shall be located at interior post locations.

R507.7 Deck joist and deck beam bearing. The ends of each joist and beam shall have not less than $1^1/_2$ inches (38 mm) of bearing on wood or metal and not less than 3 inches (76 mm) on concrete or masonry for the entire width of the beam. Joist framing into the side of a ledger board or beam shall be supported by approved joist hangers. Joists bearing on a beam shall be connected to the beam to resist lateral displacement.

TABLE R507.6
DECK BEAM SPAN LENGTHS[a, b] (ft. - in.)

SPECIES[c]	SIZE[d]	DECK JOIST SPAN LESS THAN OR EQUAL TO: (feet)						
		6	8	10	12	14	16	18
Southern pine	2 – 2 × 6	6-11	5-11	5-4	4-10	4-6	4-3	4-0
	2 – 2 × 8	8-9	7-7	6-9	6-2	5-9	5-4	5-0
	2 – 2 × 10	10-4	9-0	8-0	7-4	6-9	6-4	6-0
	2 – 2 × 12	12-2	10-7	9-5	8-7	8-0	7-6	7-0
	3 – 2 × 6	8-2	7-5	6-8	6-1	5-8	5-3	5-0
	3 – 2 × 8	10-10	9-6	8-6	7-9	7-2	6-8	6-4
	3 – 2 × 10	13-0	11-3	10-0	9-2	8-6	7-11	7-6
	3 – 2 × 12	15-3	13-3	11-10	10-9	10-0	9-4	8-10
Douglas fir-larch[e], hem-fir[e], spruce-pine-fir[e], redwood, western cedars, ponderosa pine[f], red pine[f]	3 × 6 or 2 – 2 x 6	5-5	4-8	4-2	3-10	3-6	3-1	2-9
	3 × 8 or 2 – 2 × 8	6-10	5-11	5-4	4-10	4-6	4-1	3-8
	3 × 10 or 2 – 2 × 10	8-4	7-3	6-6	5-11	5-6	5-1	4-8
	3 × 12 or 2 – 2 × 12	9-8	8-5	7-6	6-10	6-4	5-11	5-7
	4 × 6	6-5	5-6	4-11	4-6	4-2	3-11	3-8
	4 × 8	8-5	7-3	6-6	5-11	5-6	5-2	4-10
	4 × 10	9-11	8-7	7-8	7-0	6-6	6-1	5-8
	4 × 12	11-5	9-11	8-10	8-1	7-6	7-0	6-7
	3 – 2 × 6	7-4	6-8	6-0	5-6	5-1	4-9	4-6
	3 – 2 × 8	9-8	8-6	7-7	6-11	6-5	6-0	5-8
	3 – 2 × 10	12-0	10-5	9-4	8-6	7-10	7-4	6-11
	3 – 2 × 12	13-11	12-1	10-9	9-10	9-1	8-6	8-1

For SI: 1 inch = 25.4 mm, 1 foot = 304.8 mm, 1 pound per square foot = 0.0479 kPa, 1 pound = 0.454 kg.

a. Ground snow load, live load = 40 psf, dead load = 10 psf, L/Δ = 360 at main span, L/Δ = 180 at cantilever with a 220-pound point load applied at the end.

b. Beams supporting deck joists from one side only.

c. No. 2 grade, wet service factor.

d. Beam depth shall be greater than or equal to depth of joists with a flush beam condition.

e. Includes incising factor.

f. Northern species. Incising factor not included.

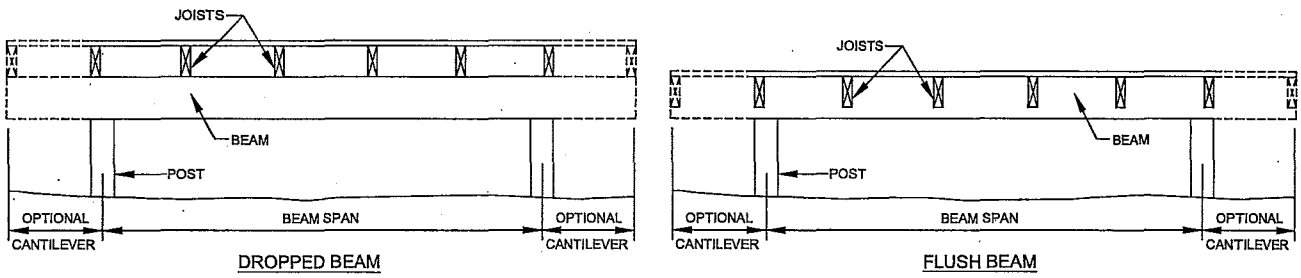

FIGURE R507.6
TYPICAL DECK BEAM SPANS

R507.7.1 Deck post to deck beam. Deck beams shall be attached to deck posts in accordance with Figure R507.7.1 or by other equivalent means capable to resist lateral displacement. Manufactured post-to-beam connectors shall be sized for the post and beam sizes. All bolts shall have washers under the head and nut.

Exception: Where deck beams bear directly on footings in accordance with Section R507.8.1.

R507.8 Deck posts. For single-level wood-framed decks with beams sized in accordance with Table R507.6, deck post size shall be in accordance with Table R507.8.

TABLE R507.8
DECK POST HEIGHT[a]

DECK POST SIZE	MAXIMUM HEIGHT[a]
4 × 4	8'
4 × 6	8'
6 × 6	14'

For SI: 1 foot = 304.8 mm.
a. Measured to the underside of the beam.

R507.8.1 Deck post to deck footing. Posts shall bear on footings in accordance with Section R403 and Figure R507.8.1. Posts shall be restrained to prevent lateral displacement at the bottom support. Such lateral restraint shall be provided by manufactured connectors installed in accordance with Section R507 and the manufacturers' instructions or a minimum post embedment of 12 inches (305 mm) in surrounding soils or concrete piers.

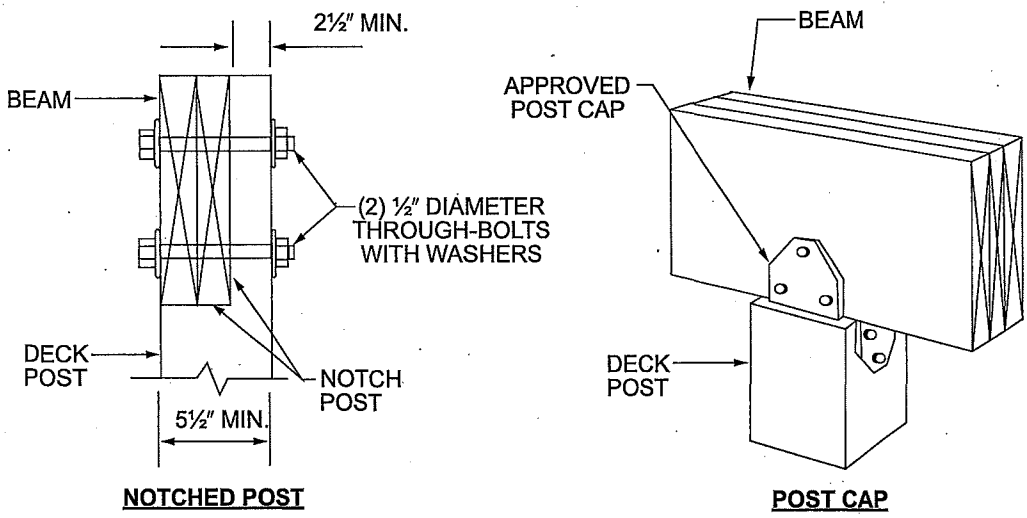

For SI: 1 inch = 25.4 mm.

FIGURE R507.7.1
DECK BEAM TO DECK POST

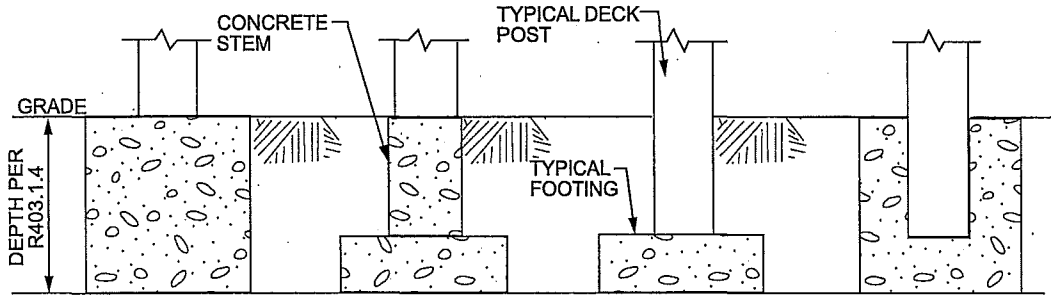

FIGURE R507.8.1
TYPICAL DECK POSTS TO DECK FOOTINGS

CHAPTER 6

WALL CONSTRUCTION

SECTION R601
GENERAL

R601.1 Application. The provisions of this chapter shall control the design and construction of walls and partitions for buildings.

R601.2 Requirements. Wall construction shall be capable of accommodating all loads imposed in accordance with Section R301 and of transmitting the resulting loads to the supporting structural elements.

R601.2.1 Compressible floor-covering materials. Compressible floor-covering materials that compress more than $^1/_{32}$ inch (0.8 mm) when subjected to 50 pounds (23 kg) applied over 1 inch square (645 mm) of material and are greater than $^1/_8$ inch (3.2 mm) in thickness in the uncompressed state shall not extend beneath walls, partitions or columns, which are fastened to the floor.

SECTION R602
WOOD WALL FRAMING

R602.1 General. Wood and wood-based products used for load-supporting purposes shall conform to the applicable provisions of this section.

R602.1.1 Sawn lumber. Sawn lumber shall be identified by a grade mark of an accredited lumber grading or inspection agency and have design values certified by an accreditation body that complies with DOC PS 20. In lieu of a grade mark, a certification of inspection issued by a lumber grading or inspection agency meeting the requirements of this section shall be accepted.

R602.1.2 End-jointed lumber. Approved end-jointed lumber identified by a grade mark conforming to Section R602.1 shall be permitted to be used interchangeably with solid-sawn members of the same species and grade. End-jointed lumber used in an assembly required elsewhere in this code to have a fire-resistance rating shall have the designation "Heat Resistant Adhesive" or "HRA" included in its grade mark.

R602.1.3 Structural glued-laminated timbers. Glued-laminated timbers shall be manufactured and identified as required in ANSI/AITC A190.1 and ASTM D 3737.

R602.1.4 Structural log members. Structural log members shall comply with the provisions of ICC 400.

R602.1.5 Structural composite lumber. Structural capacities for structural composite lumber shall be established and monitored in accordance with ASTM D 5456.

R602.1.6 Cross-laminated timber. Cross-laminated timber shall be manufactured and identified as required by ANSI/APA PRG 320.

R602.1.7 Engineered wood rim board. Engineered wood rim boards shall conform to ANSI/APA PRR 410 or shall be evaluated in accordance with ASTM D 7672. Structural capacities shall be in accordance with either ANSI/APA PRR 410 or established in accordance with ASTM D 7672. Rim boards conforming to ANSI/APA PRR 410 shall be marked in accordance with that standard.

R602.1.8 Wood structural panels. Wood structural panel sheathing shall conform to DOC PS 1, DOC PS 2 or, when manufactured in Canada, CSA O437 or CSA O325. Panels shall be identified for grade, bond classification, and performance category by a grade mark or certificate of inspection issued by an approved agency.

R602.1.9 Particleboard. Particleboard shall conform to ANSI A208.1. Particleboard shall be identified by the grade mark or certificate of inspection issued by an approved agency.

R602.1.10 Fiberboard. Fiberboard shall conform to ASTM C 208. Fiberboard sheathing, where used structurally, shall be identified by an approved agency as conforming to ASTM C 208.

R602.2 Grade. Studs shall be a minimum No. 3, standard or stud grade lumber.

Exception: Bearing studs not supporting floors and nonbearing studs shall be permitted to be utility grade lumber, provided the studs are spaced in accordance with Table R602.3(5).

R602.3 Design and construction. Exterior walls of wood-frame construction shall be designed and constructed in accordance with the provisions of this chapter and Figures R602.3(1) and R602.3(2), or in accordance with AWC NDS. Components of exterior walls shall be fastened in accordance with Tables R602.3(1) through R602.3(4). Wall sheathing shall be fastened directly to framing members and, where placed on the exterior side of an exterior wall, shall be capable of resisting the wind pressures listed in Table R301.2(2) adjusted for height and exposure using Table R301.2(3) and shall conform to the requirements of Table R602.3(3). Wall sheathing used only for exterior wall covering purposes shall comply with Section R703.

Studs shall be continuous from support at the sole plate to a support at the top plate to resist loads perpendicular to the wall. The support shall be a foundation or floor, ceiling or roof diaphragm or shall be designed in accordance with accepted engineering practice.

Exception: Jack studs, trimmer studs and cripple studs at openings in walls that comply with Tables R602.7(1) and R602.7(2).

TABLE R602.3(1)
FASTENING SCHEDULE

ITEM	DESCRIPTION OF BUILDING ELEMENTS	NUMBER AND TYPE OF FASTENER[a, b, c]	SPACING AND LOCATION
	Roof		
1	Blocking between ceiling joists or rafters to top plate	4-8d box ($2^1/_2$″ × 0.113″) or 3-8d common ($2^1/_2$″ × 0.131″); or 3-10d box (3″ × 0.128″); or 3-3″ × 0.131″ nails	Toe nail
2	Ceiling joists to top plate	4-8d box ($2^1/_2$″ × 0.113″); or 3-8d common ($2^1/_2$″ × 0.131″); or 3-10d box (3″ × 0.128″); or 3-3″ × 0.131″ nails	Per joist, toe nail
3	Ceiling joist not attached to parallel rafter, laps over partitions [see Sections R802.3.1, R802.3.2 and Table R802.5.1(9)]	4-10d box (3″ × 0.128″); or 3-16d common ($3^1/_2$″ × 0.162″); or 4-3″ × 0.131″ nails	Face nail
4	Ceiling joist attached to parallel rafter (heel joint) [see Sections R802.3.1 and R802.3.2 and Table R802.5.1(9)]	Table R802.5.1(9)	Face nail
5	Collar tie to rafter, face nail or $1^1/_4$″ × 20 ga. ridge strap to rafter	4-10d box (3″ × 0.128″); or 3-10d common (3″ × 0.148″); or 4-3″ × 0.131″ nails	Face nail each rafter
6	Rafter or roof truss to plate	3-16d box nails ($3^1/_2$″ × 0.135″); or 3-10d common nails (3″ × 0.148″); or 4-10d box (3″ × 0.128″); or 4-3″ × 0.131″ nails	2 toe nails on one side and 1 toe nail on opposite side of each rafter or truss[i]
7	Roof rafters to ridge, valley or hip rafters or roof rafter to minimum 2″ ridge beam	4-16d ($3^1/_2$″ × 0.135″); or 3-10d common ($3^1/_2$″ × 0.148″); or 4-10d box (3″ × 0.128″); or 4-3″ × 0.131″ nails	Toe nail
		3-16d box $3^1/_2$″ × 0.135″); or 2-16d common ($3^1/_2$″ × 0.162″); or 3-10d box (3″ × 0.128″); or 3-3″ × 0.131″ nails	End nail
	Wall		
8	Stud to stud (not at braced wall panels)	16d common ($3^1/_2$″ × 0.162″)	24″ o.c. face nail
		10d box (3″ × 0.128″); or 3″ × 0.131″ nails	16″ o.c. face nail
9	Stud to stud and abutting studs at intersecting wall corners (at braced wall panels)	16d box ($3^1/_2$″ × 0.135″); or 3″ × 0.131″ nails	12″ o.c. face nail
		16d common ($3^1/_2$″ × 0.162″)	16″ o.c. face nail
10	Built-up header (2″ to 2″ header with $^1/_2$″ spacer)	16d common ($3^1/_2$″ × 0.162″)	16″ o.c. each edge face nail
		16d box ($3^1/_2$″ × 0.135″)	12″ o.c. each edge face nail
11	Continuous header to stud	5-8d box ($2^1/_2$″ × 0.113″); or 4-8d common ($2^1/_2$″ × 0.131″); or 4-10d box (3″ × 0.128″)	Toe nail
12	Top plate to top plate	16d common ($3^1/_2$″ × 0.162″)	16″ o.c. face nail
		10d box (3″ × 0.128″); or 3″ × 0.131″ nails	12″ o.c. face nail
13	Double top plate splice for SDCs A-D_2 with seismic braced wall line spacing < 25′	8-16d common ($3^1/_2$″ × 0.162″); or 12-16d box ($3^1/_2$″ × 0.135″); or 12-10d box (3″ × 0.128″); or 12-3″ × 0.131″ nails	Face nail on each side of end joint (minimum 24″ lap splice length each side of end joint)
	Double top plate splice SDCs D_0, D_1, or D_2; and braced wall line spacing ≥ 25′	12-16d ($3^1/_2$″ × 0.135″)	

(continued)

TABLE R602.3(1)—continued
FASTENING SCHEDULE

ITEM	DESCRIPTION OF BUILDING ELEMENTS	NUMBER AND TYPE OF FASTENER[a, b, c]	SPACING AND LOCATION
14	Bottom plate to joist, rim joist, band joist or blocking (not at braced wall panels)	16d common ($3^1/_2$″ × 0.162″)	16″ o.c. face nail
		16d box ($3^1/_2$″ × 0.135″); or 3″ × 0.131″ nails	12″ o.c. face nail
15	Bottom plate to joist, rim joist, band joist or blocking (at braced wall panel)	3-16d box ($3^1/_2$″ × 0.135″); or 2-16d common ($3^1/_2$″ × 0.162″); or 4-3″ × 0.131″ nails	3 each 16″ o.c. face nail 2 each 16″ o.c. face nail 4 each 16″ o.c. face nail
16	Top or bottom plate to stud	4-8d box ($2^1/_2$″ × 0.113″); or 3-16d box ($3^1/_2$″ × 0.135″); or 4-8d common ($2^1/_2$″ × 0.131″); or 4-10d box (3″ × 0.128″); or 4-3″ × 0.131″ nails	Toe nail
		3-16d box ($3^1/_2$″ × 0.135″); or 2-16d common ($3^1/_2$″ × 0.162″); or 3-10d box (3″ × 0.128″); or 3-3″ × 0.131″ nails	End nail
17	Top plates, laps at corners and intersections	3-10d box (3″ × 0.128″); or 2-16d common ($3^1/_2$″ × 0.162″); or 3-3″ × 0.131″ nails	Face nail
18	1″ brace to each stud and plate	3-8d box ($2^1/_2$″ × 0.113″); or 2-8d common ($2^1/_2$″ × 0.131″); or 2-10d box (3″ × 0.128″); or 2 staples $1^3/_4$″	Face nail
19	1″ × 6″ sheathing to each bearing	3-8d box ($2^1/_2$″ × 0.113″); or 2-8d common ($2^1/_2$″ × 0.131″); or 2-10d box (3″ × 0.128″); or 2 staples, 1″ crown, 16 ga., $1^3/_4$″ long	Face nail
20	1″ × 8″ and wider sheathing to each bearing	3-8d box ($2^1/_2$″ × 0.113″); or 3-8d common ($2^1/_2$″ × 0.131″); or 3-10d box (3″ × 0.128″); or 3 staples, 1″ crown, 16 ga., $1^3/_4$″ long	Face nail
		Wider than 1″ × 8″ 4-8d box ($2^1/_2$″ × 0.113″); or 3-8d common ($2^1/_2$″ × 0.131″); or 3-10d box (3″ × 0.128″); or 4 staples, 1″ crown, 16 ga., $1^3/_4$″ long	
		Floor	
21	Joist to sill, top plate or girder	4-8d box ($2^1/_2$″ × 0.113″); or 3-8d common ($2^1/_2$″ × 0.131″); or 3-10d box (3″ × 0.128″); or 3-3″ × 0.131″ nails	Toe nail
22	Rim joist, band joist or blocking to sill or top plate (roof applications also)	8d box ($2^1/_2$″ × 0.113″)	4″ o.c. toe nail
		8d common ($2^1/_2$″ × 0.131″); or 10d box (3″ × 0.128″); or 3″ × 0.131″ nails	6″ o.c. toe nail
23	1″ × 6″ subfloor or less to each joist	3-8d box ($2^1/_2$″ × 0.113″); or 2-8d common ($2^1/_2$″ × 0.131″); or 3-10d box (3″ × 0.128″); or 2 staples, 1″ crown, 16 ga., $1^3/_4$″ long	Face nail

(continued)

TABLE 602.3(1)
FASTENING SCHEDULE—continued

ITEM	DESCRIPTION OF BUILDING ELEMENTS	NUMBER AND TYPE OF FASTENER[a, b, c]	SPACING AND LOCATION
		Floor	
24	2″ subfloor to joist or girder	3-16d box ($3^1/_2$″ × 0.135″); or 2-16d common ($3^1/_2$″ × 0.162″)	Blind and face nail
25	2″ planks (plank & beam—floor & roof)	3-16d box ($3^1/_2$″ × 0.135″); or 2-16d common ($3^1/_2$″ × 0.162″)	At each bearing, face nail
26	Band or rim joist to joist	3-16d common ($3^1/_2$″ × 0.162″) 4-10 box (3″ × 0.128″), or 4-3″ × 0.131″ nails; or 4-3″ × 14 ga. staples, $^7/_{16}$″ crown	End nail
27	Built-up girders and beams, 2-inch lumber layers	20d common (4″ × 0.192″); or	Nail each layer as follows: 32″ o.c. at top and bottom and staggered.
		10d box (3″ × 0.128″); or 3″ × 0.131″ nails	24″ o.c. face nail at top and bottom staggered on opposite sides
		And: 2-20d common (4″ × 0.192″); or 3-10d box (3″ × 0.128″); or 3-3″ × 0.131″ nails	Face nail at ends and at each splice
28	Ledger strip supporting joists or rafters	4-16d box ($3^1/_2$″ × 0.135″); or 3-16d common ($3^1/_2$″ × 0.162″); or 4-10d box (3″ × 0.128″); or 4-3″ × 0.131″ nails	At each joist or rafter, face nail
29	Bridging to joist	2-10d (3″ × 0.128″)	Each end, toe nail

ITEM	DESCRIPTION OF BUILDING ELEMENTS	NUMBER AND TYPE OF FASTENER[a, b, c]	SPACING OF FASTENERS: Edges (inches)[h]	SPACING OF FASTENERS: Intermediate supports[c, e] (inches)
	Wood structural panels, subfloor, roof and interior wall sheathing to framing and particleboard wall sheathing to framing [see Table R602.3(3) for wood structural panel *exterior* wall sheathing to wall framing]			
30	$^3/_8$″ – $^1/_2$″	6d common (2″ × 0.113″) nail (subfloor, wall)[i] 8d common ($2^1/_2$″ × 0.131″) nail (roof)	6	12[f]
31	$^{19}/_{32}$″ – 1″	8d common nail ($2^1/_2$″ × 0.131″)	6	12[f]
32	$1^1/_8$″ – $1^1/_4$″	10d common (3″ × 0.148″) nail; or 8d ($2^1/_2$″ × 0.131″) deformed nail	6	12
	Other wall sheathing[g]			
33	$^1/_2$″ structural cellulosic fiberboard sheathing	$1^1/_2$″ galvanized roofing nail, $^7/_{16}$″ head diameter, or 1″ crown staple 16 ga., $1^1/_4$″ long	3	6
34	$^{25}/_{32}$″ structural cellulosic fiberboard sheathing	$1^3/_4$″ galvanized roofing nail, $^7/_{16}$″ head diameter, or 1″ crown staple 16 ga., $1^1/_4$″ long	3	6
35	$^1/_2$″ gypsum sheathing[d]	$1^1/_2$″ galvanized roofing nail; staple galvanized, $1^1/_2$″ long; $1^1/_4$″ screws, Type W or S	7	7
36	$^5/_8$″ gypsum sheathing[d]	$1^3/_4$″ galvanized roofing nail; staple galvanized, $1^5/_8$″ long; $1^5/_8$″ screws, Type W or S	7	7
	Wood structural panels, combination subfloor underlayment to framing			
37	$^3/_4$″ and less	6d deformed (2″ × 0.120″) nail; or 8d common ($2^1/_2$″ × 0.131″) nail	6	12
38	$^7/_8$″ – 1″	8d common ($2^1/_2$″ × 0.131″) nail; or 8d deformed ($2^1/_2$″ × 0.120″) nail	6	12
39	$1^1/_8$″ – $1^1/_4$″	10d common (3″ × 0.148″) nail; or 8d deformed ($2^1/_2$″ × 0.120″) nail	6	12

For SI: 1 inch = 25.4 mm, 1 foot = 304.8 mm, 1 mile per hour = 0.447 m/s; 1 ksi = 6.895 MPa.

(continued)

TABLE R602.3(1)—continued
FASTENING SCHEDULE

a. Nails are smooth-common, box or deformed shanks except where otherwise stated. Nails used for framing and sheathing connections shall have minimum average bending yield strengths as shown: 80 ksi for shank diameter of 0.192 inch (20d common nail), 90 ksi for shank diameters larger than 0.142 inch but not larger than 0.177 inch, and 100 ksi for shank diameters of 0.142 inch or less.
b. Staples are 16 gage wire and have a minimum $^7/_{16}$-inch on diameter crown width.
c. Nails shall be spaced at not more than 6 inches on center at all supports where spans are 48 inches or greater.
d. Four-foot by 8-foot or 4-foot by 9-foot panels shall be applied vertically.
e. Spacing of fasteners not included in this table shall be based on Table R602.3(2).
f. Where the ultimate design wind speed is 130 mph or less, nails for attaching wood structural panel roof sheathing to gable end wall framing shall be spaced 6 inches on center. Where the ultimate design wind speed is greater than 130 mph, nails for attaching panel roof sheathing to intermediate supports shall be spaced 6 inches on center for minimum 48-inch distance from ridges, eaves and gable end walls; and 4 inches on center to gable end wall framing.
g. Gypsum sheathing shall conform to ASTM C 1396 and shall be installed in accordance with GA 253. Fiberboard sheathing shall conform to ASTM C 208.
h. Spacing of fasteners on floor sheathing panel edges applies to panel edges supported by framing members and required blocking and at floor perimeters only. Spacing of fasteners on roof sheathing panel edges applies to panel edges supported by framing members and required blocking. Blocking of roof or floor sheathing panel edges perpendicular to the framing members need not be provided except as required by other provisions of this code. Floor perimeter shall be supported by framing members or solid blocking.
i. Where a rafter is fastened to an adjacent parallel ceiling joist in accordance with this schedule, provide two toe nails on one side of the rafter and toe nails from the ceiling joist to top plate in accordance with this schedule. The toe nail on the opposite side of the rafter shall not be required.

R602.3.1 Stud size, height and spacing. The size, height and spacing of studs shall be in accordance with Table R602.3.(5).

Exceptions:

1. Utility grade studs shall not be spaced more than 16 inches (406 mm) on center, shall not support more than a roof and ceiling, and shall not exceed 8 feet (2438 mm) in height for exterior walls and load-bearing walls or 10 feet (3048 mm) for interior nonload-bearing walls.
2. Where snow loads are less than or equal to 25 pounds per square foot (1.2 kPa), and the ultimate design wind speed is less than or equal to 130 mph (58.1 m/s), 2-inch by 6-inch (38 mm by 14 mm) studs supporting a roof load with not more than 6 feet (1829 mm) of tributary length shall have a maximum height of 18 feet (5486 mm) where spaced at 16 inches (406 mm) on center, or 20 feet (6096 mm) where spaced at 12 inches (304.8 mm) on center. Studs shall be minimum No. 2 grade lumber.

R602.3.2 Top plate. Wood stud walls shall be capped with a double top plate installed to provide overlapping at corners and intersections with bearing partitions. End joints in top plates shall be offset not less than 24 inches (610 mm). Joints in plates need not occur over studs. Plates shall be not less than 2-inches (51 mm) nominal thickness and have a width not less than the width of the studs.

Exception: A single top plate used as an alternative to a double top plate shall comply with the following:

1. The single top plate shall be tied at corners, intersecting walls, and at in-line splices in straight wall lines in accordance with Table R602.3.2.
2. The rafters or joists shall be centered over the studs with a tolerance of not more than 1 inch (25 mm).
3. Omission of the top plate is permitted over headers where the headers are adequately tied to adjacent wall sections in accordance with Table R602.3.2.

R602.3.3 Bearing studs. Where joists, trusses or rafters are spaced more than 16 inches (406 mm) on center and the bearing studs below are spaced 24 inches (610 mm) on center, such members shall bear within 5 inches (127 mm) of the studs beneath.

Exceptions:

1. The top plates are two 2-inch by 6-inch (38 mm by 140 mm) or two 3-inch by 4-inch (64 mm by 89 mm) members.
2. A third top plate is installed.
3. Solid blocking equal in size to the studs is installed to reinforce the double top plate.

R602.3.4 Bottom (sole) plate. Studs shall have full bearing on a nominal 2-by (51 mm) or larger plate or sill having a width not less than to the width of the studs.

TABLE R602.3.2
SINGLE TOP-PLATE SPLICE CONNECTION DETAILS

CONDITION	TOP-PLATE SPLICE LOCATION			
	Corners and intersecting walls		Butt joints in straight walls	
	Splice plate size	Minimum nails each side of joint	Splice plate size	Minimum nails each side of joint
Structures in SDC A-C; and in SDC D_0, D_1 and D_2 with braced wall line spacing less than 25 feet	3″ × 6″ × 0.036″ galvanized steel plate or equivalent	(6) 8d box ($2^1/_2$″ × 0.113″) nails	3′ × 12″ × 0.036″ galvanized steel plate or equivalent	(12) 8d box ($2^1/_2$″ × 0.113″) nails
Structures in SDC D_0, D_1 and D_2, with braced wall line spacing greater than or equal to 25 feet	3″ × 8″ by 0.036″ galvanized steel plate or equivalent	(9) 8d box ($2^1/_2$″ × 0.113″) nails	3′ × 16″ × 0.036″ galvanized steel plate or equivalent	(18) 8d box ($2^1/_2$″ × 0.113″) nails

For SI: 1 inch = 25.4 mm, 1 foot = 304.8 mm.

TABLE R602.3(2)
ALTERNATE ATTACHMENTS TO TABLE R602.3(1)

NOMINAL MATERIAL THICKNESS (inches)	DESCRIPTION[a, b] OF FASTENER AND LENGTH (inches)	SPACING[c] OF FASTENERS	
		Edges (inches)	Intermediate supports (inches)
Wood structural panels subfloor, roof[g] and wall sheathing to framing and particleboard wall sheathing to framing[f]			
Up to $^1/_2$	Staple 15 ga. $1^3/_4$	4	8
	0.097 - 0.099 Nail $2^1/_4$	3	6
	Staple 16 ga. $1^3/_4$	3	6
$^{19}/_{32}$ and $^5/_8$	0.113 Nail 2	3	6
	Staple 15 and 16 ga. 2	4	8
	0.097 - 0.099 Nail $2^1/_4$	4	8
$^{23}/_{32}$ and $^3/_4$	Staple 14 ga. 2	4	8
	Staple 15 ga. $1^3/_4$	3	6
	0.097 - 0.099 Nail $2^1/_4$	4	8
	Staple 16 ga. 2	4	8
1	Staple 14 ga. $2^1/_4$	4	8
	0.113 Nail $2^1/_4$	3	6
	Staple 15 ga. $2^1/_4$	4	8
	0.097 - 0.099 Nail $2^1/_2$	4	8
NOMINAL MATERIAL THICKNESS (inches)	**DESCRIPTION[a, b] OF FASTENER AND LENGTH (inches)**	**SPACING[c] OF FASTENERS**	
		Edges (inches)	**Body of panel[d] (inches)**
Floor underlayment; plywood-hardboard-particleboard[f]-fiber-cement[h]			
Fiber-cement			
$^1/_4$	3d, corrosion-resistant, ring shank nails (finished flooring other than tile)	3	6
	Staple 18 ga., $^7/_8$ long, $^1/_4$ crown (finished flooring other than tile)	3	6
	$1^1/_4$ long × .121 shank × .375 head diameter corrosion-resistant (galvanized or stainless steel) roofing nails (for tile finish)	8	8
	$1^1/_4$ long, No. 8 × .375 head diameter, ribbed wafer-head screws (for tile finish)	8	8
Plywood			
$^1/_4$ and $^5/_{16}$	$1^1/_4$ ring or screw shank nail-minimum $12^1/_2$ ga. (0.099″) shank diameter	3	6
	Staple 18 ga., $^7/_8$, $^3/_{16}$ crown width	2	5
$^{11}/_{32}$, $^3/_8$, $^{15}/_{32}$, and $^1/_2$	$1^1/_4$ ring or screw shank nail-minimum $12^1/_2$ ga. (0.099″) shank diameter	6	8[e]
$^{19}/_{32}$, $^5/_8$, $^{23}/_{32}$ and $^3/_4$	$1^1/_2$ ring or screw shank nail-minimum $12^1/_2$ ga. (0.099″) shank diameter	6	8
	Staple 16 ga. $1^1/_2$	6	8
Hardboard[f]			
0.200	$1^1/_2$ long ring-grooved underlayment nail	6	6
	4d cement-coated sinker nail	6	6
	Staple 18 ga., $^7/_8$ long (plastic coated)	3	6
Particleboard			
$^1/_4$	4d ring-grooved underlayment nail	3	6
	Staple 18 ga., $^7/_8$ long, $^3/_{16}$ crown	3	6
$^3/_8$	6d ring-grooved underlayment nail	6	10
	Staple 16 ga., $1^1/_8$ long, $^3/_8$ crown	3	6
$^1/_2$, $^5/_8$	6d ring-grooved underlayment nail	6	10
	Staple 16 ga., $1^5/_8$ long, $^3/_8$ crown	3	6

(continued)

2628

TABLE R602.3(2)
ALTERNATE ATTACHMENTS TO TABLE R602.3(1)—continued

For SI: 1 inch = 25.4 mm.

a. Nail is a general description and shall be permitted to be T-head, modified round head or round head.
b. Staples shall have a minimum crown width of $^{7}/_{16}$-inch on diameter except as noted.
c. Nails or staples shall be spaced at not more than 6 inches on center at all supports where spans are 48 inches or greater. Nails or staples shall be spaced at not more than 12 inches on center at intermediate supports for floors.
d. Fasteners shall be placed in a grid pattern throughout the body of the panel.
e. For 5-ply panels, intermediate nails shall be spaced not more than 12 inches on center each way.
f. Hardboard underlayment shall conform to CPA/ANSI A135.4
g. Specified alternate attachments for roof sheathing shall be permitted where the ultimate design wind speed is less than 130 mph. Fasteners attaching wood structural panel roof sheathing to gable end wall framing shall be installed using the spacing listed for panel edges.
h. Fiber-cement underlayment shall conform to ASTM C 1288 or ISO 8336, Category C.

TABLE R602.3(3)
REQUIREMENTS FOR WOOD STRUCTURAL PANEL WALL SHEATHING USED TO RESIST WIND PRESSURES[a, b, c]

MINIMUM NAIL		MINIMUM WOOD STRUCTURAL PANEL SPAN RATING	MINIMUM NOMINAL PANEL THICKNESS (inches)	MAXIMUM WALL STUD SPACING (inches)	PANEL NAIL SPACING		ULTIMATE DESIGN WIND SPEED V_{ult}, (mph)		
Size	Penetration (inches)				Edges (inches o.c.)	Field (inches o.c.)	Wind exposure category		
							B	C	D
6d Common (2.0″ × 0.113″)	1.5	24/0	$^{3}/_{8}$	16	6	12	140	115	110
8d Common (2.5″ × 0.131″)	1.75	24/16	$^{7}/_{16}$	16	6	12	170	140	135
				24	6	12	140	115	110

For SI: 1 inch = 25.4 mm, 1 mile per hour = 0.447 m/s.

a. Panel strength axis parallel or perpendicular to supports. Three-ply plywood sheathing with studs spaced more than 16 inches on center shall be applied with panel strength axis perpendicular to supports.
b. Table is based on wind pressures acting toward and away from building surfaces in accordance with Section R301.2. Lateral bracing requirements shall be in accordance with Section R602.10.
c. Wood structural panels with span ratings of Wall-16 or Wall-24 shall be permitted as an alternate to panels with a 24/0 span rating. Plywood siding rated 16 o.c. or 24 o.c. shall be permitted as an alternate to panels with a 24/16 span rating. Wall-16 and Plywood siding 16 o.c. shall be used with studs spaced not more than 16 inches on center.

TABLE R602.3(4)
ALLOWABLE SPANS FOR PARTICLEBOARD WALL SHEATHING[a]

THICKNESS (inch)	GRADE	STUD SPACING (inches)	
		When siding is nailed to studs	When siding is nailed to sheathing
$^{3}/_{8}$	M-1 Exterior glue	16	—
$^{1}/_{2}$	M-2 Exterior glue	16	16

For SI: 1 inch = 25.4 mm.

a. Wall sheathing not exposed to the weather. If the panels are applied horizontally, the end joints of the panel shall be offset so that four panel corners will not meet. All panel edges must be supported. Leave a $^{1}/_{16}$-inch gap between panels and nail not less than $^{3}/_{8}$ inch from panel edges.

TABLE R602.3(5)
SIZE, HEIGHT AND SPACING OF WOOD STUDS[a]

STUD SIZE (inches)	BEARING WALLS					NONBEARING WALLS	
	Laterally unsupported stud height[a] (feet)	Maximum spacing when supporting a roof-ceiling assembly or a habitable attic assembly, only (inches)	Maximum spacing when supporting one floor, plus a roof-ceiling assembly or a habitable attic assembly (inches)	Maximum spacing when supporting two floors, plus a roof-ceiling assembly or a habitable attic assembly (inches)	Maximum spacing when supporting one floor height[a] (inches)	Laterally unsupported stud height[a] (feet)	Maximum spacing (inches)
2 × 3[b]	—	—	—	—	—	10	16
2 × 4	10	24[c]	16[c]	—	24	14	24
3 × 4	10	24	24	16	24	14	24
2 × 5	10	24	24	—	24	16	24
2 × 6	10	24	24	16	24	20	24

For SI: 1 inch = 25.4 mm, 1 foot = 304.8 mm.

a. Listed heights are distances between points of lateral support placed perpendicular to the plane of the wall. Bearing walls shall be sheathed on not less than one side or bridging shall be installed not greater than 4 feet apart measured vertically from either end of the stud. Increases in unsupported height are permitted where in compliance with Exception 2 of Section R602.3.1 or designed in accordance with accepted engineering practice.

b. Shall not be used in exterior walls.

c. A habitable attic assembly supported by 2 × 4 studs is limited to a roof span of 32 feet. Where the roof span exceeds 32 feet, the wall studs shall be increased to 2 × 6 or the studs shall be designed in accordance with accepted engineering practice.

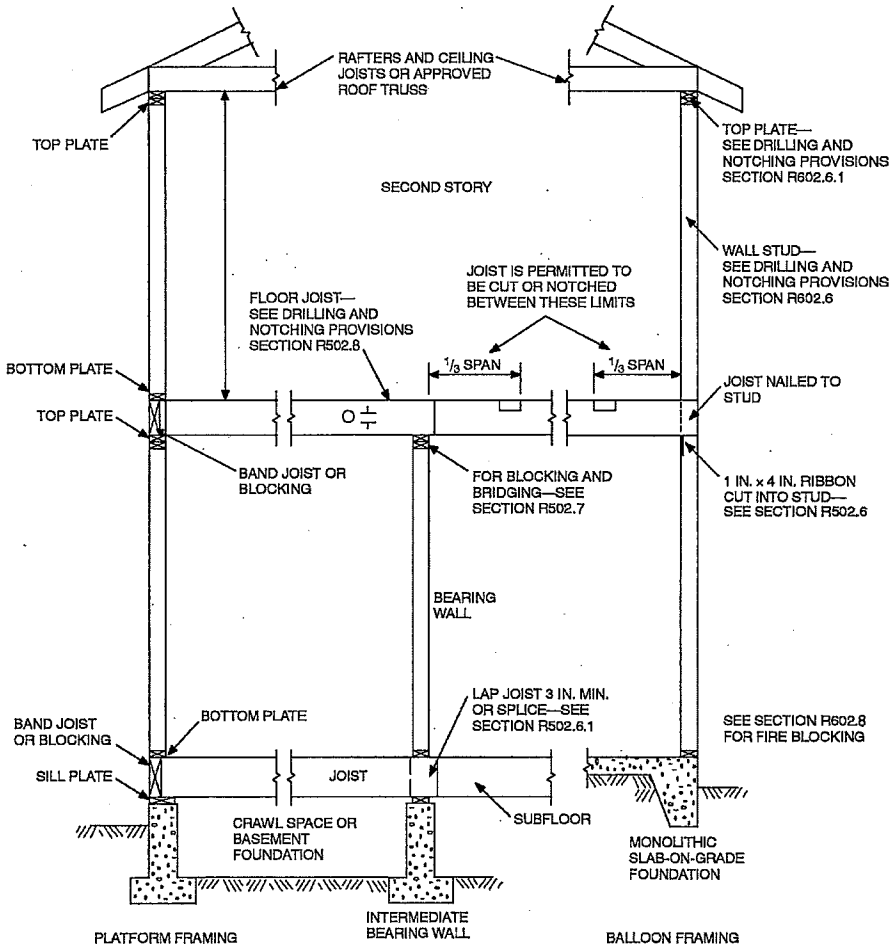

For SI: 1 inch = 25.4 mm, 1 foot = 304.8 mm.

FIGURE R602.3(1)
TYPICAL WALL, FLOOR AND ROOF FRAMING

2630

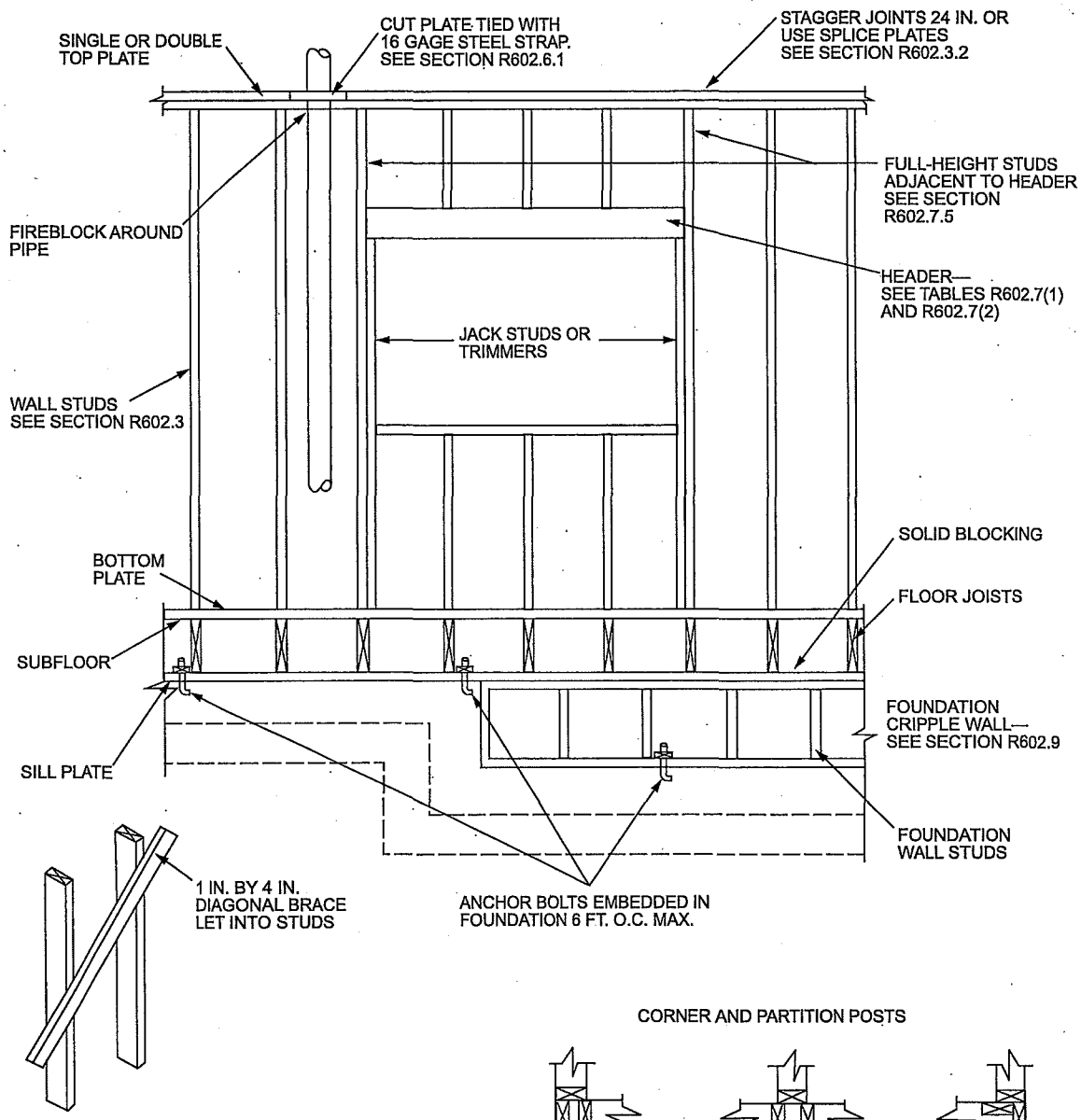

APPLY APPROVED SHEATHING OR BRACE EXTERIOR WALLS WITH 1 IN. BY 4 IN. BRACES LET INTO STUDS AND PLATES AND EXTENDING FROM BOTTOM PLATE TO TOP PLATE, OR OTHER APPROVED METAL STRAP DEVICES INSTALLED IN ACCORDANCE WITH THE MANUFACTURER'S SPECIFICATIONS. SEE SECTION R602.10.

NOTE: A THIRD STUD AND/OR PARTITION INTERSECTION BACKING STUDS SHALL BE PERMITTED TO BE OMITTED THROUGH THE USE OF WOOD BACKUP CLEATS, METAL DRYWALL CLIPS OR OTHER APPROVED DEVICES THAT WILL SERVE AS ADEQUATE BACKING FOR THE FACING MATERIALS.

For SI: 1 inch = 25.4 mm, 1 foot = 304.8 mm.

FIGURE R602.3(2)
FRAMING DETAILS

R602.3.5 Braced wall panel uplift load path. Braced wall panels located at exterior walls that support roof rafters or trusses (including stories below top story) shall have the framing members connected in accordance with one of the following:

1. Fastening in accordance with Table R602.3(1) where:
   1.1. The ultimate design wind speed does not exceed 115 mph (51 m/s), the wind exposure category is B, the roof pitch is 5:12 or greater, and the roof span is 32 feet (9754 mm) or less.
   1.2. The net uplift value at the top of a wall does not exceed 100 plf (146 N/mm). The net uplift value shall be determined in accordance with Section R802.11 and shall be permitted to be reduced by 60 plf (86 N/mm) for each full wall above.
2. Where the net uplift value at the top of a wall exceeds 100 plf (146 N/mm), installing approved uplift framing connectors to provide a continuous load path from the top of the wall to the foundation or to a point where the uplift force is 100 plf (146 N/mm) or less. The net uplift value shall be as determined in Item 1.2.
3. Wall sheathing and fasteners designed to resist combined uplift and shear forces in accordance with accepted engineering practice.

R602.4 Interior load-bearing walls. Interior load-bearing walls shall be constructed, framed and fireblocked as specified for exterior walls.

R602.5 Interior nonbearing walls. Interior nonbearing walls shall be permitted to be constructed with 2-inch by 3-inch (51 mm by 76 mm) studs spaced 24 inches (610 mm) on center or, where not part of a *braced wall line*, 2-inch by 4-inch (51 mm by 102 mm) flat studs spaced at 16 inches (406 mm) on center. Interior nonbearing walls shall be capped with not less than a single top plate. Interior nonbearing walls shall be fireblocked in accordance with Section R602.8.

R602.6 Drilling and notching of studs. Drilling and notching of studs shall be in accordance with the following:

1. Notching. Any stud in an exterior wall or bearing partition shall be permitted to be cut or notched to a depth not exceeding 25 percent of its width. Studs in nonbearing partitions shall be permitted to be notched to a depth not to exceed 40 percent of a single stud width.
2. Drilling. Any stud shall be permitted to be bored or drilled, provided that the diameter of the resulting hole is not more than 60 percent of the stud width, the edge of the hole is not more than $^5/_8$ inch (16 mm) to the edge of the stud, and the hole is not located in the same section as a cut or notch. Studs located in exterior walls or bearing partitions drilled over 40 percent and up to 60 percent shall be doubled with not more than two successive doubled studs bored. See Figures R602.6(1) and R602.6(2).

   Exception: Use of *approved* stud shoes is permitted where they are installed in accordance with the manufacturer's recommendations.

R602.6.1 Drilling and notching of top plate. When piping or ductwork is placed in or partly in an exterior wall or interior load-bearing wall, necessitating cutting, drilling or notching of the top plate by more than 50 percent of its width, a galvanized metal tie not less than 0.054 inch thick (1.37 mm) (16 ga) and $1^1/_2$ inches (38 mm) wide shall be fastened across and to the plate at each side of the opening with not less than eight 10d (0.148 inch diameter) nails having a minimum length of $1^1/_2$ inches (38 mm) at each side or equivalent. The metal tie must extend a minimum of 6 inches past the opening. See Figure R602.6.1.

Exception: When the entire side of the wall with the notch or cut is covered by wood structural panel sheathing.

R602.7 Headers. For header spans, see Tables R602.7(1), R602.7(2) and R602.7(3).

R602.7.1 Single member headers. Single headers shall be framed with a single flat 2-inch-nominal (51 mm) member or wall plate not less in width than the wall studs on the top and bottom of the header in accordance with Figures R602.7.1(1) and R602.7.1(2) and face nailed to the top and bottom of the header with 10d box nails (3 inches × 0.128 inches) spaced 12 inches on center.

R602.7.2 Rim board headers. Rim board header size, material and span shall be in accordance with Table R602.7(1). Rim board headers shall be constructed in accordance with Figure R602.7.2 and shall be supported at each end by full-height studs. The number of full-height studs at each end shall be not less than the number of studs displaced by half of the header span based on the maximum stud spacing in accordance with Table R602.3(5). Rim board headers supporting concentrated loads shall be designed in accordance with accepted engineering practice.

R602.7.3 Wood structural panel box headers. Wood structural panel box headers shall be constructed in accordance with Figure R602.7.3 and Table R602.7.3.

R602.7.4 Nonbearing walls. Load-bearing headers are not required in interior or exterior nonbearing walls. A single flat 2-inch by 4-inch (51 mm by 102 mm) member shall be permitted to be used as a header in interior or exterior nonbearing walls for openings up to 8 feet (2438 mm) in width if the vertical distance to the parallel nailing surface above is not more than 24 inches (610 mm). For such nonbearing headers, cripples or blocking are not required above the header.

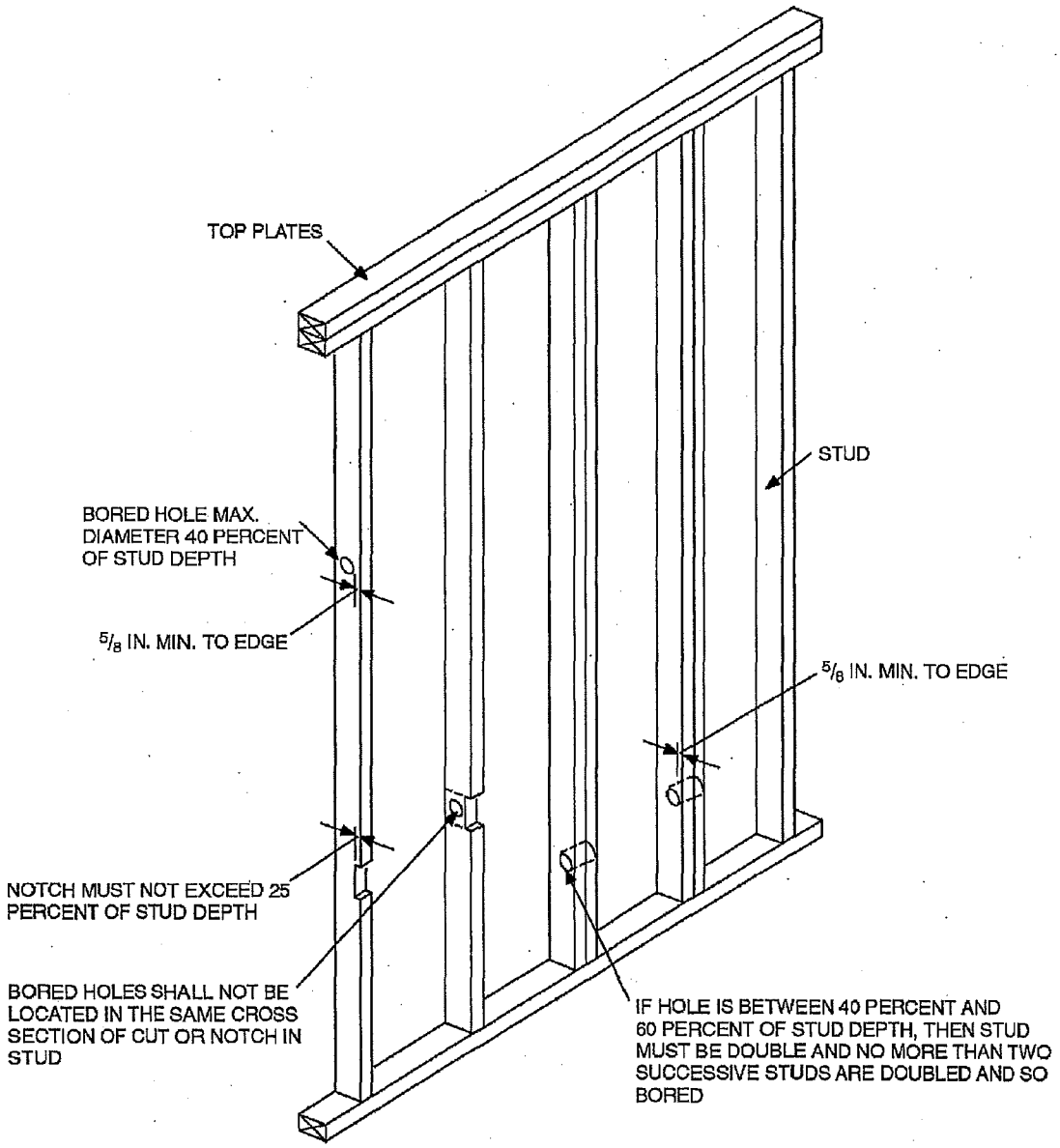

For SI: 1 inch = 25.4 mm.
Note: Condition for exterior and bearing walls.

FIGURE R602.6(1)
NOTCHING AND BORED HOLE LIMITATIONS FOR EXTERIOR WALLS AND BEARING WALLS

2633

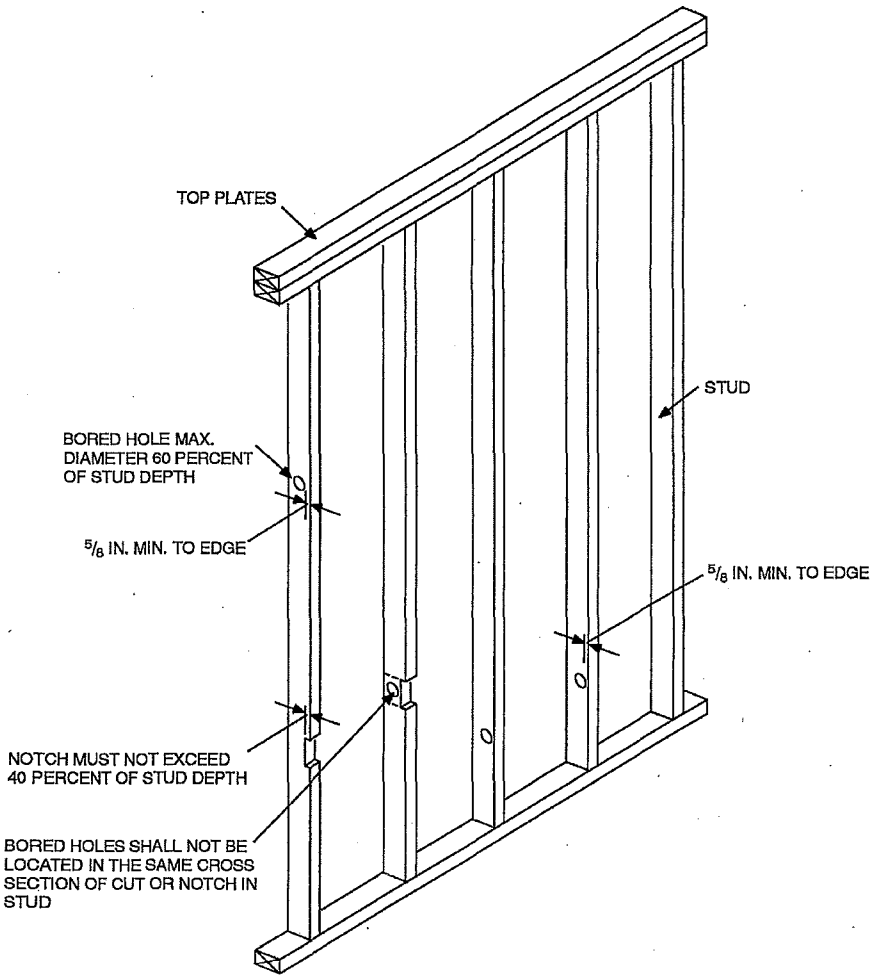

For SI: 1 inch = 25.4 mm.

FIGURE R602.6(2)
NOTCHING AND BORED HOLE LIMITATIONS FOR INTERIOR NONBEARING WALLS

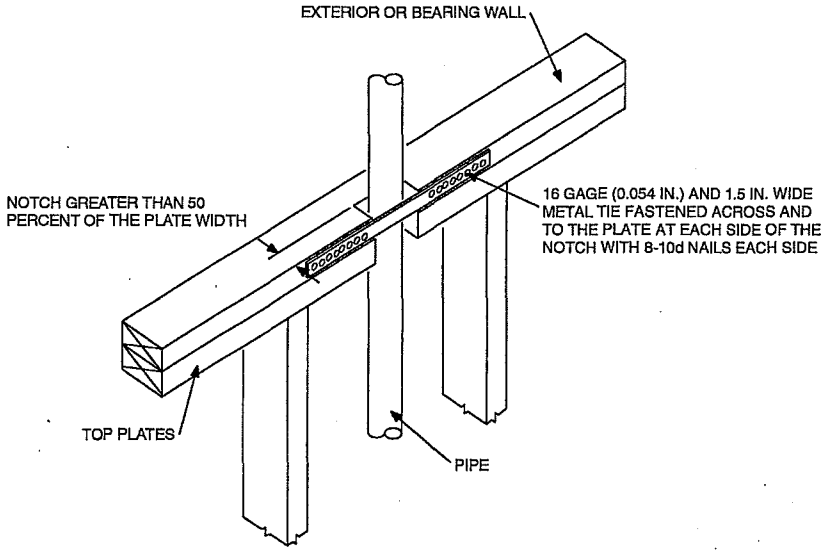

For SI: 1 inch = 25.4 mm.

FIGURE R602.6.1
TOP PLATE FRAMING TO ACCOMMODATE PIPING

TABLE R602.7(1)
GIRDER SPANS[a] AND HEADER SPANS[a] FOR EXTERIOR BEARING WALLS
(Maximum spans for Douglas fir-larch, hem-fir, southern pine and spruce-pine-fir[b] and required number of jack studs)

GIRDERS AND HEADERS SUPPORTING	SIZE	GROUND SNOW LOAD (psf)[e]																	
		30						50						70					
		Building width[c] (feet)																	
		20		28		36		20		28		36		20		28		36	
		Span	NJ[d]	Span	NJ[d]	Span	NJ[d]	Span	NJ[d]	Span	NJ[d]	Span	NJ[d]	Span	NJ[d]	Span	NJ[d]	Span	NJ[d]
Roof and ceiling	1-2 × 8	4-6	1	3-10	1	3-5	1	3-9	1	3-2	1	2-10	2	—	—	—	—	—	—
	1-2 × 10	5-8	1	4-11	1	4-4	1	4-9	1	4-1	1	3-7	2	—	—	—	—	—	—
	1-2 × 12	6-11	1	5-11	2	5-3	2	5-9	2	4-8	2	3-8	2	—	—	—	—	—	—
	2-2 × 4	3-6	1	3-2	1	2-10	1	3-2	1	2-9	1	2-6	1	2-10	1	2-6	1	2-3	1
	2-2 × 6	5-5	1	4-8	1	4-2	1	4-8	1	4-1	1	3-8	2	4-2	1	3-8	2	3-3	2
	2-2 × 8	6-10	1	5-11	2	5-4	2	5-11	2	5-2	2	4-7	2	5-4	2	4-7	2	4-1	2
	2-2 × 10	8-5	2	7-3	2	6-6	2	7-3	2	6-3	2	5-7	2	6-6	2	5-7	2	5-0	2
	2-2 × 12	9-9	2	8-5	2	7-6	2	8-5	2	7-3	2	6-6	2	7-6	2	6-6	2	5-10	3
	3-2 × 8	8-4	1	7-5	1	6-8	1	7-5	1	6-5	2	5-9	2	6-8	1	5-9	2	5-2	2
	3-2 × 10	10-6	1	9-1	2	8-2	2	9-1	2	7-10	2	7-0	2	8-2	2	7-0	2	6-4	2
	3-2 × 12	12-2	2	10-7	2	9-5	2	10-7	2	9-2	2	8-2	2	9-5	2	8-2	2	7-4	2
	4-2 × 8	9-2	1	8-4	1	7-8	1	8-4	1	7-5	1	6-8	1	7-8	1	6-8	1	5-11	2
	4-2 × 10	11-8	1	10-6	1	9-5	2	10-6	1	9-1	2	8-2	2	9-5	2	8-2	2	7-3	2
	4-2 × 12	14-1	1	12-2	2	10-11	2	12-2	2	10-7	2	9-5	2	10-11	2	9-5	2	8-5	2
Roof, ceiling and one center-bearing floor	1-2 × 8	3-11	1	3-5	1	3-0	1	3-7	1	3-0	2	2-8	2	—	—	—	—	—	—
	1-2 × 10	5-0	2	4-4	2	3-10	2	4-6	2	3-11	2	3-4	2	—	—	—	—	—	—
	1-2 × 12	5-10	2	4-9	2	4-2	2	5-5	2	4-2	2	3-4	2	—	—	—	—	—	—
	2-2 × 4	3-1	1	2-9	1	2-5	1	2-9	1	2-5	1	2-2	1	2-7	1	2-3	1	2-0	1
	2-2 × 6	4-6	1	4-0	1	3-7	2	4-1	1	3-7	2	3-3	2	3-9	2	3-3	2	2-11	2
	2-2 × 8	5-9	2	5-0	2	4-6	2	5-2	2	4-6	2	4-1	2	4-9	2	4-2	2	3-9	2
	2-2 × 10	7-0	2	6-2	2	5-6	2	6-4	2	5-6	2	5-0	2	5-9	2	5-1	2	4-7	3
	2-2 × 12	8-1	2	7-1	2	6-5	2	7-4	2	6-5	2	5-9	3	6-8	2	5-10	3	5-3	3
	3-2 × 8	7-2	1	6-3	2	5-8	2	6-5	2	5-8	2	5-1	2	5-11	2	5-2	2	4-8	2
	3-2 × 10	8-9	2	7-8	2	6-11	2	7-11	2	6-11	2	6-3	2	7-3	2	6-4	2	5-8	2
	3-2 × 12	10-2	2	8-11	2	8-0	2	9-2	2	8-0	2	7-3	2	8-5	2	7-4	2	6-7	2
	4-2 × 8	8-1	1	7-3	1	6-7	1	7-5	1	6-6	1	5-11	2	6-10	1	6-0	2	5-5	2
	4-2 × 10	10-1	1	8-10	2	8-0	2	9-1	2	8-0	2	7-2	2	8-4	2	7-4	2	6-7	2
	4-2 × 12	11-9	2	10-3	2	9-3	2	10-7	2	9-3	2	8-4	2	9-8	2	8-6	2	7-7	2
Roof, ceiling and one clear span floor	1-2 × 8	3-6	1	3-0	1	2-8	1	3-5	1	2-11	1	2-7	2	—	—	—	—	—	—
	1-2 × 10	4-6	1	3-10	1	3-3	1	4-4	1	3-9	1	3-1	2	—	—	—	—	—	—
	1-2 × 12	5-6	1	4-2	2	3-3	2	5-4	2	3-11	2	3-1	2	—	—	—	—	—	—
	2-2 × 4	2-8	1	2-4	1	2-1	1	2-7	1	2-3	1	2-0	1	2-5	1	2-1	1	1-10	1
	2-2 × 6	3-11	1	3-5	2	3-0	2	3-10	2	3-4	2	3-0	2	3-6	2	3-1	2	2-9	2
	2-2 × 8	5-0	2	4-4	2	3-10	2	4-10	2	4-2	2	3-9	2	4-6	2	3-11	2	3-6	2
	2-2 × 10	6-1	2	5-3	2	4-8	2	5-11	2	5-1	2	4-7	3	5-6	2	4-9	2	4-3	3
	2-2 × 12	7-1	2	6-1	3	5-5	3	6-10	2	5-11	3	5-4	3	6-4	2	5-6	3	5-0	3
	3-2 × 8	6-3	2	5-5	2	4-10	2	6-1	2	5-3	2	4-8	2	5-7	2	4-11	2	4-5	2
	3-2 × 10	7-7	2	6-7	2	5-11	2	7-5	2	6-5	2	5-9	2	6-10	2	6-0	2	5-4	2
	3-2 × 12	8-10	2	7-8	2	6-10	2	8-7	2	7-5	2	6-8	2	7-11	2	6-11	2	6-3	2
	4-2 × 8	7-2	1	6-3	2	5-7	2	7-0	1	6-1	2	5-5	2	6-6	1	5-8	2	5-1	2
	4-2 × 10	8-9	2	7-7	2	6-10	2	8-7	2	7-5	2	6-7	2	7-11	2	6-11	2	6-2	2
	4-2 × 12	10-2	2	8-10	2	7-11	2	9-11	2	8-7	2	7-8	2	9-2	2	8-0	2	7-2	2

(continued)

TABLE R602.7(1)—continued
GIRDER SPANS[a] AND HEADER SPANS[a] FOR EXTERIOR BEARING WALLS
(Maximum spans for Douglas fir-larch, hem-fir, southern pine and spruce-pine-fir[b] and required number of jack studs)

GIRDERS AND HEADERS SUPPORTING	SIZE	GROUND SNOW LOAD (psf)[e]																	
		30						50						70					
		Building width[c] (feet)																	
		20		28		36		20		28		36		20		28		36	
		Span	NJ[d]	Span	NJ[d]	Span	NJ[d]	Span	NJ[d]	Span	NJ[d]	Span	NJ[d]	Span	NJ[d]	Span	NJ[d]	Span	NJ[d]
Roof, ceiling and two center-bearing floors	2-2 × 4	2-7	1	2-3	1	2-0	1	2-6	1	2-2	1	1-11	1	2-4	1	2-0	1	1-9	1
	2-2 × 6	3-9	2	3-3	2	2-11	2	3-8	2	3-2	2	2-10	2	3-5	2	3-0	2	2-8	2
	2-2 × 8	4-9	2	4-2	2	3-9	2	4-7	2	4-0	2	3-8	2	4-4	2	3-9	2	3-5	2
	2-2 × 10	5-9	2	5-1	2	4-7	3	5-8	2	4-11	2	4-5	3	5-3	2	4-7	3	4-2	3
	2-2 × 12	6-8	2	5-10	3	5-3	3	6-6	2	5-9	3	5-2	3	6-1	3	5-4	3	4-10	3
	3-2 × 8	5-11	2	5-2	2	4-8	2	5-9	2	5-1	2	4-7	2	5-5	2	4-9	2	4-3	2
	3-2 × 10	7-3	2	6-4	2	5-8	2	7-1	2	6-2	2	5-7	2	6-7	2	5-9	2	5-3	2
	3-2 × 12	8-5	2	7-4	2	6-7	2	8-2	2	7-2	2	6-5	3	7-8	2	6-9	2	6-1	3
	4-2 × 8	6-10	1	6-0	2	5-5	2	6-8	1	5-10	2	5-3	2	6-3	2	5-6	2	4-11	2
	4-2 × 10	8-4	2	7-4	2	6-7	2	8-2	2	7-2	2	6-5	2	7-7	2	6-8	2	6-0	2
	4-2 × 12	9-8	2	8-6	2	7-8	2	9-5	2	8-3	2	7-5	2	8-10	2	7-9	2	7-0	2
Roof, ceiling, and two clear-span floors	2-2 × 4	2-1	1	1-8	1	1-6	2	2-0	1	1-8	1	1-5	2	2-0	1	1-8	1	1-5	2
	2-2 × 6	3-1	2	2-8	2	2-4	2	3-0	2	2-7	2	2-3	2	2-11	2	2-7	2	2-3	2
	2-2 × 8	3-10	2	3-4	2	3-0	3	3-10	2	3-4	2	2-11	3	3-9	2	3-3	2	2-11	3
	2-2 × 10	4-9	2	4-1	3	3-8	3	4-8	2	4-0	3	3-7	3	4-7	3	4-0	3	3-6	3
	2-2 × 12	5-6	3	4-9	3	4-3	3	5-5	3	4-8	3	4-2	3	5-4	3	4-7	3	4-1	4
	3-2 × 8	4-10	2	4-2	2	3-9	2	4-9	2	4-1	2	3-8	2	4-8	2	4-1	2	3-8	2
	3-2 × 10	5-11	2	5-1	2	4-7	3	5-10	2	5-0	2	4-6	3	5-9	2	4-11	2	4-5	3
	3-2 × 12	6-10	2	5-11	3	5-4	3	6-9	2	5-10	3	5-3	3	6-8	2	5-9	3	5-2	3
	4-2 × 8	5-7	2	4-10	2	4-4	2	5-6	2	4-9	2	4-3	2	5-5	2	4-8	2	4-2	2
	4-2 × 10	6-10	2	5-11	2	5-3	2	6-9	2	5-10	2	5-2	2	6-7	2	5-9	2	5-1	2
	4-2 × 12	7-11	2	6-10	2	6-2	3	7-9	2	6-9	2	6-0	3	7-8	2	6-8	2	5-11	3

For SI: 1 inch = 25.4 mm, 1 pound per square foot = 0.0479 kPa.

a. Spans are given in feet and inches.

b. Tabulated values assume #2 grade lumber.

c. Building width is measured perpendicular to the ridge. For widths between those shown, spans are permitted to be interpolated.

d. NJ = Number of jack studs required to support each end. Where the number of required jack studs equals one, the header is permitted to be supported by an approved framing anchor attached to the full-height wall stud and to the header.

e. Use 30 psf ground snow load for cases in which ground snow load is less than 30 psf and the roof live load is equal to or less than 20 psf.

TABLE R602.7(2)
GIRDER SPANS[a] AND HEADER SPANS[a] FOR INTERIOR BEARING WALLS
(Maximum spans for Douglas fir-larch, hem-fir, southern pine and spruce-pine-fir[b] and required number of jack studs)

HEADERS AND GIRDERS SUPPORTING	SIZE	BUILDING Width[c] (feet)					
		20		28		36	
		Span	NJ[d]	Span	NJ[d]	Span	NJ[d]
One floor only	2-2 × 4	3-1	1	2-8	1	2-5	1
	2-2 × 6	4-6	1	3-11	1	3-6	1
	2-2 × 8	5-9	1	5-0	2	4-5	2
	2-2 × 10	7-0	2	6-1	2	5-5	2
	2-2 × 12	8-1	2	7-0	2	6-3	2
	3-2 × 8	7-2	1	6-3	1	5-7	2
	3-2 × 10	8-9	1	7-7	2	6-9	2
	3-2 × 12	10-2	2	8-10	2	7-10	2
	4-2 × 8	9-0	1	7-8	1	6-9	1
	4-2 × 10	10-1	1	8-9	1	7-10	2
	4-2 × 12	11-9	1	10-2	2	9-1	2
Two floors	2-2 × 4	2-2	1	1-10	1	1-7	1
	2-2 × 6	3-2	2	2-9	2	2-5	2
	2-2 × 8	4-1	2	3-6	2	3-2	2
	2-2 × 10	4-11	2	4-3	2	3-10	3
	2-2 × 12	5-9	2	5-0	3	4-5	3
	3-2 × 8	5-1	2	4-5	2	3-11	2
	3-2 × 10	6-2	2	5-4	2	4-10	2
	3-2 × 12	7-2	2	6-3	2	5-7	3
	4-2 × 8	6-1	1	5-3	2	4-8	2
	4-2 × 10	7-2	2	6-2	2	5-6	2
	4-2 × 12	8-4	2	7-2	2	6-5	2

For SI: 1 inch = 25.4 mm, 1 foot = 304.8 mm.

a. Spans are given in feet and inches.

b. Tabulated values assume #2 grade lumber.

c. Building width is measured perpendicular to the ridge. For widths between those shown, spans are permitted to be interpolated.

d. NJ = Number of jack studs required to support each end. Where the number of required jack studs equals one, the header is permitted to be supported by an approved framing anchor attached to the full-height wall stud and to the header.

TABLE R602.7(3)
GIRDER AND HEADER SPANS[a] FOR OPEN PORCHES
(Maximum span for Douglas fir-larch, hem-fir, southern pine and spruce-pine-fir[b])

SIZE	SUPPORTING ROOF						SUPPORTING FLOOR	
	GROUND SNOW LOAD (psf)							
	30		50		70			
	DEPTH OF PORCH[c] (feet)							
	8	14	8	14	8	14	8	14
2-2 × 6	7-6	5-8	6-2	4-8	5-4	4-0	6-4	4-9
2-2 × 8	10-1	7-7	8-3	6-2	7-1	5-4	8-5	6-4
2-2 × 10	12-4	9-4	10-1	7-7	8-9	6-7	10-4	7-9
2-2 × 12	14-4	10-10	11-8	8-10	10-1	7-8	11-11	9-0

For SI: 1 inch = 25.4 mm, 1 foot = 304.8 mm, 1 pound per square foot = 0.0479 kPa.

a. Spans are given in feet and inches.

b. Tabulated values assume #2 grade lumber, wet service and incising for refractory species. Use 30 psf ground snow load for cases in which ground snow load is less than 30 psf and the roof live load is equal to or less than 20 psf.

c. Porch depth is measured horizontally from building face to centerline of the header. For depths between those shown, spans are permitted to be interpolated.

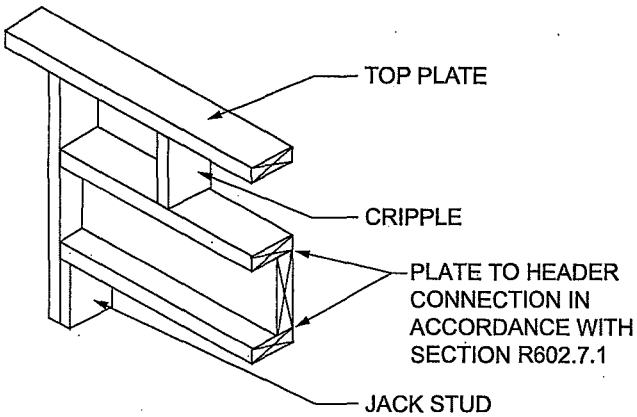

FIGURE R602.7.1(1)
SINGLE MEMBER HEADER IN EXTERIOR BEARING WALL

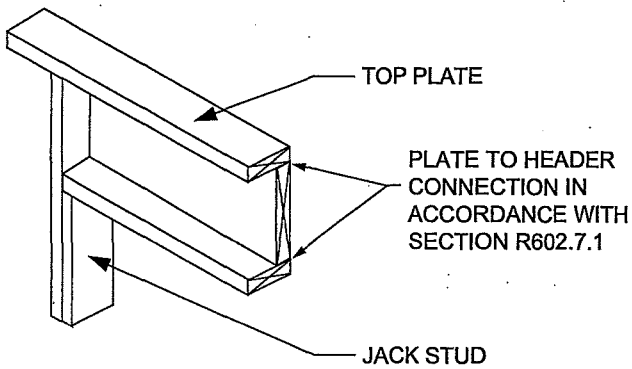

FIGURE R602.7.1(2)
ALTERNATIVE SINGLE MEMBER HEADER WITHOUT CRIPPLE

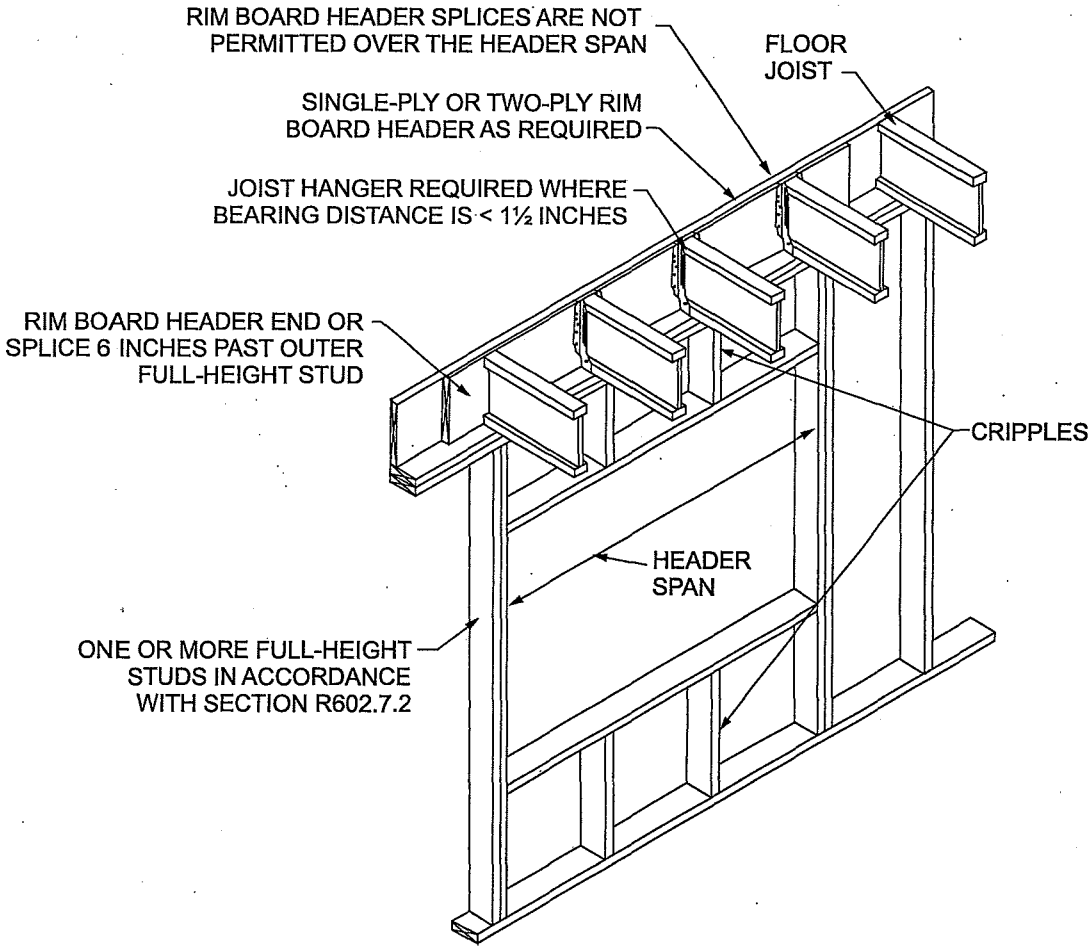

For SI: 25.4 mm = 1 inch.

FIGURE R602.7.2
RIM BOARD HEADER CONSTRUCTION

2638

TABLE R602.7.3
MAXIMUM SPANS FOR WOOD STRUCTURAL PANEL BOX HEADERS[a]

HEADER CONSTRUCTION[b]	HEADER DEPTH (inches)	HOUSE DEPTH (feet)				
		24	26	28	30	32
Wood structural panel–one side	9	4	4	3	3	—
	15	5	5	4	3	3
Wood structural panel–both sides	9	7	5	5	4	3
	15	8	8	7	7	6

For SI: 1 inch = 25.4 mm, 1 foot = 304.8 mm.

a. Spans are based on single story with clear-span trussed roof or two story with floor and roof supported by interior-bearing walls.

b. See Figure R602.7.3 for construction details.

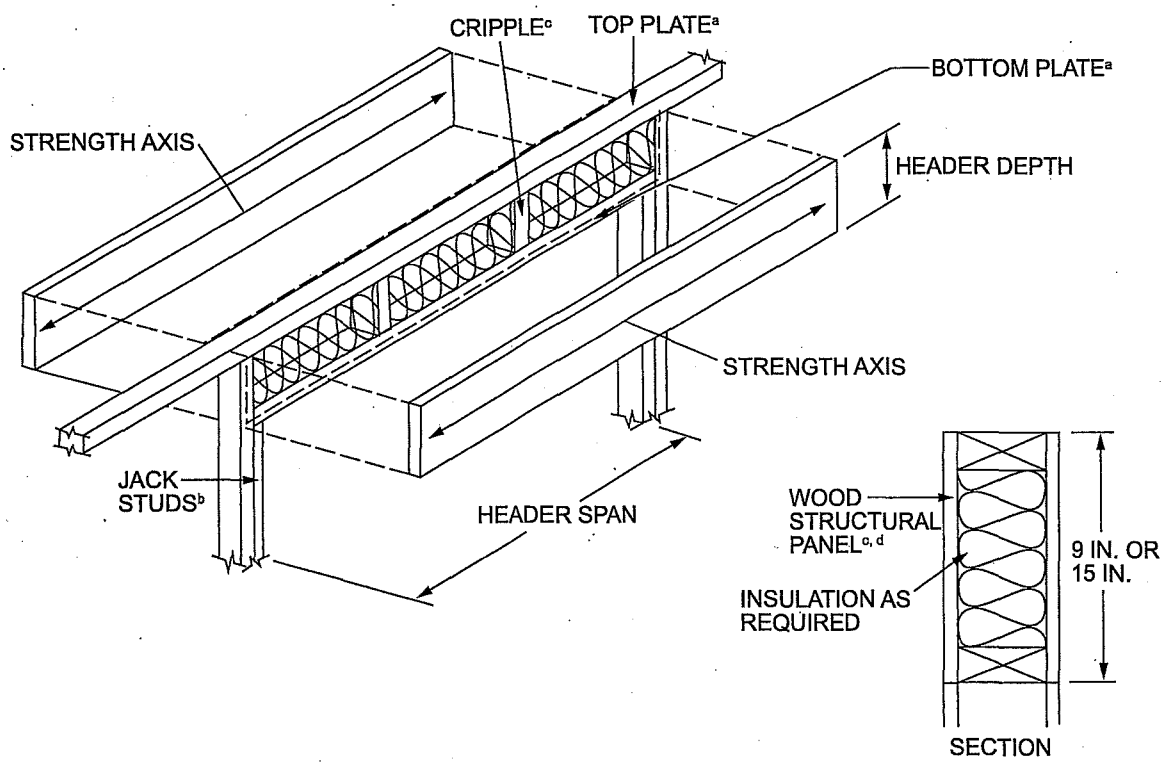

For SI: 1 inch = 25.4 mm, 1 foot = 304.8 mm.

NOTES:

a. The top and bottom plates shall be continuous at header location.

b. Jack studs shall be used for spans over 4 feet.

c. Cripple spacing shall be the same as for studs.

d. Wood structural panel faces shall be single pieces of $^{15}/_{32}$-inch-thick Exposure 1 (exterior glue) or thicker, installed on the interior or exterior or both sides of the header.

e. Wood structural panel faces shall be nailed to framing and cripples with 8d common or galvanized box nails spaced 3 inches on center, staggering alternate nails $^{1}/_{2}$ inch. Galvanized nails shall be hot-dipped or tumbled.

FIGURE R602.7.3
TYPICAL WOOD STRUCTURAL PANEL BOX HEADER CONSTRUCTION

R602.7.5 Supports for headers. Headers shall be supported on each end with one or more jack studs or with approved framing anchors in accordance with Table R602.7(1) or R602.7(2). The full-height stud adjacent to each end of the header shall be end nailed to each end of the header with four-16d nails (3.5 inches × 0.135 inches). The minimum number of full-height studs at each end of a header shall be in accordance with Table R602.7.5.

TABLE R602.7.5
MINIMUM NUMBER OF FULL HEIGHT STUDS AT EACH END OF HEADERS IN EXTERIOR WALLS

HEADER SPAN (feet)	MAXIMUM STUD SPACING (inches) [per Table R602.3(5)]	
	16	24
≤ 3′	1	1
4′	2	1
8′	3	2
12′	5	3
16′	6	4

R602.8 Fireblocking required. Fireblocking shall be provided in accordance with Section R302.11.

R602.9 Cripple walls. Foundation cripple walls shall be framed of studs not smaller than the studding above. When exceeding 4 feet (1219 mm) in height, such walls shall be framed of studs having the size required for an additional *story*.

Cripple walls with a stud height less than 14 inches (356 mm) shall be continuously sheathed on one side with wood structural panels fastened to both the top and bottom plates in accordance with Table R602.3(1), or the cripple walls shall be constructed of solid blocking.

Cripple walls shall be supported on continuous foundations.

R602.10 Wall bracing. Buildings shall be braced in accordance with this section or, when applicable, Section R602.12. Where a building, or portion thereof, does not comply with one or more of the bracing requirements in this section, those portions shall be designed and constructed in accordance with Section R301.1.

R602.10.1 Braced wall lines. For the purpose of determining the amount and location of bracing required in each story level of a building, *braced wall lines* shall be designated as straight lines in the building plan placed in accordance with this section.

R602.10.1.1 Length of a braced wall line. The length of a *braced wall line* shall be the distance between its ends. The end of a *braced wall line* shall be the intersection with a perpendicular *braced wall line*, an angled *braced wall line* as permitted in Section R602.10.1.4 or an exterior wall as shown in Figure R602.10.1.1.

R602.10.1.2 Offsets along a braced wall line. Exterior walls parallel to a *braced wall line* shall be offset not more than 4 feet (1219 mm) from the designated *braced wall line* location as shown in Figure R602.10.1.1. Interior walls used as bracing shall be offset not more than 4 feet (1219 mm) from a *braced wall line* through the interior of the building as shown in Figure R602.10.1.1.

R602.10.1.3 Spacing of braced wall lines. The spacing between parallel *braced wall lines* shall be in accordance with Table R602.10.1.3. Intermediate *braced wall lines* through the interior of the building shall be permitted.

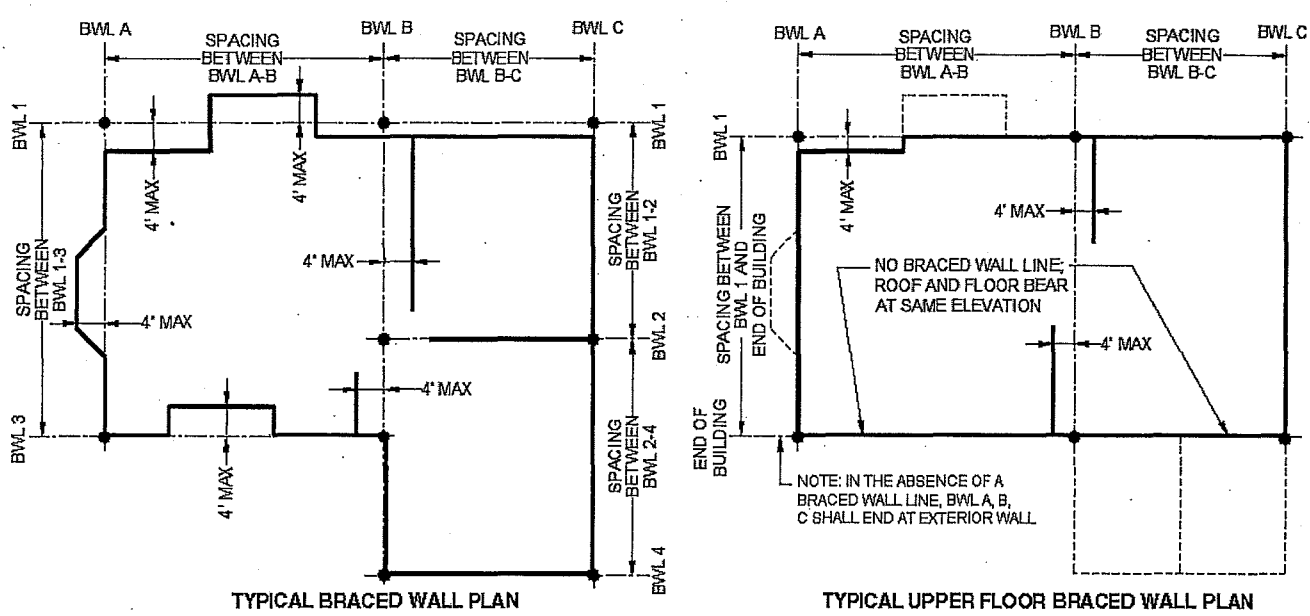

For SI: 1 foot = 304.8 mm.

FIGURE R602.10.1.1
BRACED WALL LINES

2640

R602.10.1.4 Angled walls. Any portion of a wall along a *braced wall line* shall be permitted to angle out of plane for a maximum diagonal length of 8 feet (2438 mm). Where the angled wall occurs at a corner, the length of the *braced wall line* shall be measured from the projected corner as shown in Figure R602.10.1.4. Where the diagonal length is greater than 8 feet (2438 mm), it shall be considered a separate *braced wall line* and shall be braced in accordance with Section R602.10.1.

R602.10.2 Braced wall panels. *Braced wall panels* shall be full-height sections of wall that shall not have vertical or horizontal offsets. *Braced wall panels* shall be constructed and placed along a *braced wall line* in accordance with this section and the bracing methods specified in Section R602.10.4.

R602.10.2.1 Braced wall panel uplift load path. The bracing lengths in Table R602.10.3(1) apply only when uplift loads are resisted in accordance with Section R602.3.5.

R602.10.2.2 Locations of braced wall panels. A *braced wall panel* shall begin within 10 feet (3810 mm) from each end of a *braced wall line* as determined in Section R602.10.1.1. The distance between adjacent edges of *braced wall panels* along a *braced wall line* shall be not greater than 20 feet (6096 mm) as shown in Figure R602.10.2.2.

TABLE R602.10.1.3
BRACED WALL LINE SPACING

APPLICATION	CONDITION	BUILDING TYPE	BRACED WALL LINE SPACING CRITERIA	
			Maximum Spacing	Exception to Maximum Spacing
Wind bracing	Ultimate design wind speed 100 mph to < 140 mph	Detached, townhouse	60 feet	None
Seismic bracing	SDC A – C	Detached	Use wind bracing	
	SDC A – B	Townhouse	Use wind bracing	
	SDC C	Townhouse	35 feet	Up to 50 feet when length of required bracing per Table R602.10.3(3) is adjusted in accordance with Table R602.10.3(4).
	SDC D_0, D_1, D_2	Detached, townhouses, one- and two-story only	25 feet	Up to 35 feet to allow for a single room not to exceed 900 square feet. Spacing of all other braced wall lines shall not exceed 25 feet.
	SDC D_0, D_1, D_2	Detached, townhouse	25 feet	Up to 35 feet when length of required bracing per Table R602.10.3(3) is adjusted in accordance with Table R602.10.3(4).

For SI: 1 foot = 304.8 mm, 1 square foot = 0.0929 m^2, 1 mile per hour = 0.447 m/s.

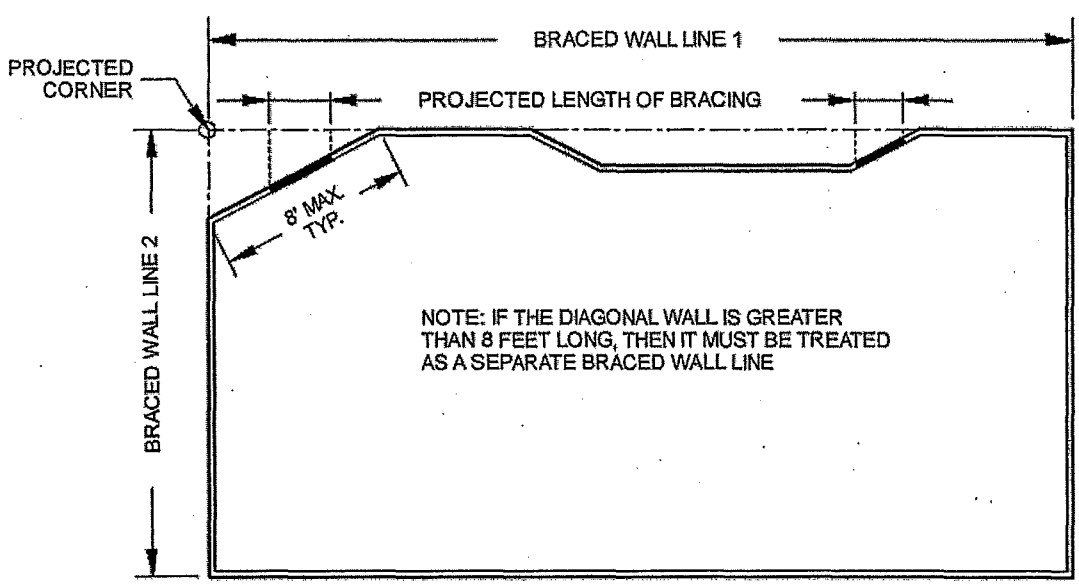

For SI: 1 foot = 304.8 mm.

FIGURE R602.10.1.4
ANGLED WALLS

2641

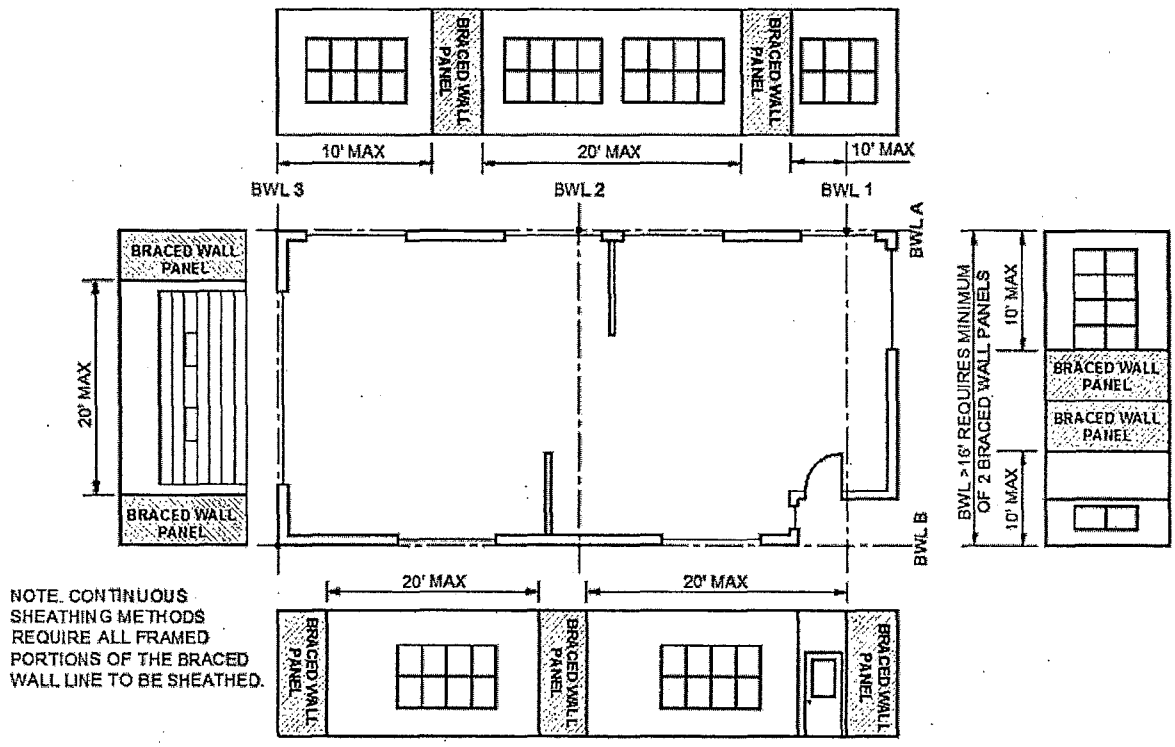

For SI: 1 foot = 304.8 mm.

FIGURE R602.10.2.2
LOCATION OF BRACED WALL PANELS

R602.10.2.2.1 Location of braced wall panels in Seismic Design Categories D_0, D_1 and D_2. Braced wall panels shall be located at each end of a braced wall line.

Exception: Braced wall panels constructed of Method WSP or BV-WSP and continuous sheathing methods as specified in Section R602.10.4 shall be permitted to begin not more than 10 feet (3048 mm) from each end of a braced wall line provided each end complies with one of the following:

1. A minimum 24-inch-wide (610 mm) panel for Methods WSP, CS-WSP, CS-G and CS-PF is applied to each side of the building corner as shown in End Condition 4 of Figure R602.10.7.
2. The end of each braced wall panel closest to the end of the braced wall line shall have an 1,800 lb (8 kN) hold-down device fastened to the stud at the edge of the braced wall panel closest to the corner and to the foundation or framing below as shown in End Condition 5 of Figure R602.10.7.

R602.10.2.3 Minimum number of braced wall panels. *Braced wall lines* with a length of 16 feet (4877 mm) or less shall have not less than two *braced wall panels* of any length or one *braced wall panel* equal to 48 inches (1219 mm) or more. *Braced wall lines* greater than 16 feet (4877 mm) shall have not less than two *braced wall panels*.

R602.10.3 Required length of bracing. The required length of bracing along each *braced wall line* shall be determined as follows:

1. All buildings in Seismic Design Categories A and B shall use Table R602.10.3(1) and the applicable adjustment factors in Table R602.10.3(2).
2. Detached buildings in Seismic Design Category C shall use Table R602.10.3(1) and the applicable adjustment factors in Table R602.10.3(2).
3. Townhouses in Seismic Design Category C shall use the greater value determined from Table R602.10.3(1) or R602.10.3(3) and the applicable adjustment factors in Table R602.10.3(2) or R602.10.3(4), respectively.
4. All buildings in Seismic Design Categories D_0, D_1 and D_2 shall use the greater value determined from Table R602.10.3(1) or R602.10.3(3) and the applicable adjustment factors in Table R602.10.3(2) or R602.10.3(4), respectively.

Only *braced wall panels* parallel to the *braced wall line* shall contribute toward the required length of bracing of that *braced wall line*. *Braced wall panels* along an angled wall meeting the minimum length requirements of Tables R602.10.5 and R602.10.5.2 shall be permitted to contribute its projected length toward the minimum required

length of bracing for the *braced wall line* as shown in Figure R602.10.1.4. Any *braced wall panel* on an angled wall at the end of a *braced wall line* shall contribute its projected length for only one of the *braced wall lines* at the projected corner.

Exception: The length of wall bracing for dwellings in Seismic Design Categories D_0, D_1 and D_2 with stone or masonry veneer installed in accordance with Section R703.8 and exceeding the first-story height shall be in accordance with Section R602.10.6.5.

R602.10.4 Construction methods for braced wall panels. Intermittent and continuously sheathed *braced wall panels* shall be constructed in accordance with this section and the methods listed in Table R602.10.4.

R602.10.4.1 Mixing methods. Mixing of bracing methods shall be permitted as follows:

1. Mixing intermittent bracing and continuous sheathing methods from story to story shall be permitted.
2. Mixing intermittent bracing methods from *braced wall line* to *braced wall line* within a story shall be permitted. In regions within Seismic Design Categories A, B and C or where the ultimate design wind speed is less than or equal to 130 mph (58m/s), mixing of intermittent bracing and continuous sheathing methods from braced wall line to braced wall line within a story shall be permitted.
3. Mixing intermittent bracing methods along a *braced wall line* shall be permitted in Seismic Design Categories A and B, and detached dwellings in Seismic Design Category C, provided the length of required bracing in accordance with Table R602.10.3(1) or R602.10.3(3) is the highest value of all intermittent bracing methods used.
4. Mixing of continuous sheathing methods CS-WSP, CS-G and CS-PF along a *braced wall line* shall be permitted. Intermittent methods ABW, PFH and PFG shall be permitted to be used along a *braced wall line* with continuous sheathed methods.
5. In Seismic Design Categories A and B, and for detached one- and two-family dwellings in Seismic Design Category C, mixing of intermittent bracing methods along the interior portion of a *braced wall line* with continuous sheathing methods CS-WSP, CS-G and CS-PF along the exterior portion of the same braced wall line shall be permitted. The length of required bracing shall be the highest value of all intermittent bracing methods used in accordance with Table R602.10.3(1) or R602.10.3(3) as adjusted by Tables R602.10.3(2) and R602.10.3(4), respectively. The requirements of Section R602.10.7 shall apply to each end of the continuously sheathed portion of the braced wall line.

R602.10.4.2 Continuous sheathing methods. Continuous sheathing methods require structural panel sheathing to be used on all sheathable surfaces on one side of a *braced wall line* including areas above and below openings and gable end walls and shall meet the requirements of Section R602.10.7.

R602.10.4.3 Braced wall panel interior finish material. *Braced wall panels* shall have gypsum wall board installed on the side of the wall opposite the bracing material. Gypsum wall board shall be not less than $^1/_2$ inch (12.7 mm) in thickness and be fastened with nails or screws in accordance with Table R602.3(1) for exterior sheathing or Table R702.3.5 for interior gypsum wall board. Spacing of fasteners at panel edges for gypsum wall board opposite Method LIB bracing shall not exceed 8 inches (203 mm). Interior finish material shall not be glued in Seismic Design Categories D_0, D_1 and D_2.

Exceptions:

1. Interior finish material is not required opposite wall panels that are braced in accordance with Methods GB, BV-WSP, ABW, PFH, PFG and CS-PF, unless otherwise required by Section R302.6.
2. An approved interior finish material with an in-plane shear resistance equivalent to gypsum board shall be permitted to be substituted, unless otherwise required by Section R302.6.
3. Except for Method LIB, gypsum wall board is permitted to be omitted provided the required length of bracing in Tables R602.10.3(1) and R602.10.3(3) is multiplied by the appropriate adjustment factor in Tables R602.10.3(2) and R602.10.3(4), respectively, unless otherwise required by Section R302.6.

R602.10.5 Minimum length of a braced wall panel. The minimum length of a *braced wall panel* shall comply with Table R602.10.5. For Methods CS-WSP and CS-SFB, the minimum panel length shall be based on the adjacent clear opening height in accordance with Table R602.10.5 and Figure R602.10.5. Where a panel has an opening on either side of differing heights, the taller opening height shall be used to determine the panel length.

R602.10.5.1 Contributing length. For purposes of computing the required length of bracing in Tables R602.10.3(1) and R602.10.3(3), the contributing length of each *braced wall panel* shall be as specified in Table R602.10.5.

R602.10.5.2 Partial credit. For Methods DWB, WSP, SFB, PBS, PCP and HPS in Seismic Design Categories A, B and C, panels between 36 inches and 48 inches (914 mm and 1219 mm)) in length shall be considered a *braced wall panel* and shall be permitted to partially contribute toward the required length of bracing in Tables R602.10.3(1) and R602.10.3(3), and the contributing length shall be determined from Table R602.10.5.2.

TABLE R602.10.3(1)
BRACING REQUIREMENTS BASED ON WIND SPEED

• EXPOSURE CATEGORY B • 30-FOOT MEAN ROOF HEIGHT • 10-FOOT WALL HEIGHT • 2 BRACED WALL LINES			MINIMUM TOTAL LENGTH (FEET) OF BRACED WALL PANELS REQUIRED ALONG EACH BRACED WALL LINE[a]			
Ultimate Design Wind Speed (mph)	Story Location	Braced Wall Line Spacing (feet)	Method LIB[b]	Method GB	Methods DWB, WSP, SFB, PBS, PCP, HPS, BV-WSP, ABW, PFH, PFC, CS-SFB[c]	Methods CS-WSP, CS-G, CS-PF
≤ 110	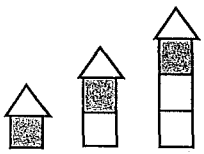	10	3.5	3.5	2.0	1.5
		20	6.0	6.0	3.5	3.0
		30	8.5	8.5	5.0	4.5
		40	11.5	11.5	6.5	5.5
		50	14.0	14.0	8.0	7.0
		60	16.5	16.5	9.5	8.0
	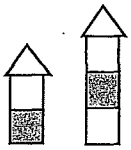	10	6.5	6.5	3.5	3.0
		20	11.5	11.5	6.5	5.5
		30	16.5	16.5	9.5	8.0
		40	21.5	21.5	12.5	10.5
		50	26.5	26.5	15.5	13.0
		60	31.5	31.5	18.0	15.5
	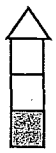	10	NP	9.5	5.5	4.5
		20	NP	17.0	10.0	8.5
		30	NP	24.5	14.0	12.0
		40	NP	32.0	18.5	15.5
		50	NP	39.5	22.5	19.0
		60	NP	46.5	26.5	23.0
≤ 115	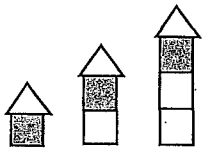	10	3.5	3.5	2.0	2.0
		20	6.5	6.5	3.5	3.5
		30	9.5	9.5	5.5	4.5
		40	12.5	12.5	7.0	6.0
		50	15.0	15.0	9.0	7.5
		60	18.0	18.0	10.5	9.0
	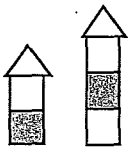	10	7.0	7.0	4.0	3.5
		20	12.5	12.5	7.5	6.5
		30	18.0	18.0	10.5	9.0
		40	23.5	23.5	13.5	11.5
		50	29.0	29.0	16.5	14.0
		60	34.5	34.5	20.0	17.0
	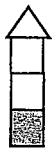	10	NP	10.0	6.0	5.0
		20	NP	18.5	11.0	9.0
		30	NP	27.0	15.5	13.0
		40	NP	35.0	20.0	17.0
		50	NP	43.0	24.5	21.0
		60	NP	51.0	29.0	25.0

(continued)

TABLE R602.10.3(1)—continued
BRACING REQUIREMENTS BASED ON WIND SPEED

• EXPOSURE CATEGORY B • 30-FOOT MEAN ROOF HEIGHT • 10-FOOT WALL HEIGHT • 2 BRACED WALL LINES			MINIMUM TOTAL LENGTH (FEET) OF BRACED WALL PANELS REQUIRED ALONG EACH BRACED WALL LINE[a]			
Ultimate Design Wind Speed (mph)	Story Location	Braced Wall Line Spacing (feet)	Method LIB[b]	Method GB	Methods DWB, WSP, SFB, PBS, PCP, HPS, BV-WSP, ABW, PFH, PFG, CS-SFB[c]	Methods CS-WSP, CS-G, CS-PF
≤ 120	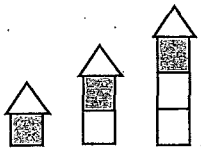	10	4.0	4.0	2.5	2.0
		20	7.0	7.0	4.0	3.5
		30	10.5	10.5	6.0	5.0
		40	13.5	13.5	8.0	6.5
		50	16.5	16.5	9.5	8.0
		60	19.5	19.5	11.5	9.5
	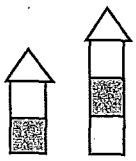	10	7.5	7.5	4.5	3.5
		20	14.0	14.0	8.0	7.0
		30	20.0	20.0	11.5	9.5
		40	25.5	25.5	15.0	12.5
		50	31.5	31.5	18.0	15.5
		60	37.5	37.5	21.5	18.5
	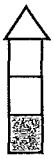	10	NP	11.0	6.5	5.5
		20	NP	20.5	11.5	10.0
		30	NP	29.0	17.0	14.5
		40	NP	38.0	22.0	18.5
		50	NP	47.0	27.0	23.0
		60	NP	55.5	32.0	27.0
≤ 130	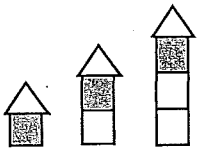	10	4.5	4.5	2.5	2.5
		20	8.5	8.5	5.0	4.0
		30	12.0	12.0	7.0	6.0
		40	15.5	15.5	9.0	7.5
		50	19.5	19.5	11.0	9.5
		60	23.0	23.0	13.0	11.0
	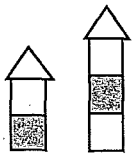	10	8.5	8.5	5.0	4.5
		20	16.0	16.0	9.5	8.0
		30	23.0	23.0	13.5	11.5
		40	30.0	30.0	17.5	15.0
		50	37.0	37.0	21.5	18.0
		60	44.0	44.0	25.0	21.5
	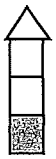	10	NP	13.0	7.5	6.5
		20	NP	24.0	13.5	11.5
		30	NP	34.5	19.5	17.0
		40	NP	44.5	25.5	22.0
		50	NP	55.0	31.5	26.5
		60	NP	65.0	37.5	31.5

(continued)

2645

TABLE R602.10.3(1)—continued
BRACING REQUIREMENTS BASED ON WIND SPEED

• EXPOSURE CATEGORY B • 30-FOOT MEAN ROOF HEIGHT • 10-FOOT WALL HEIGHT • 2 BRACED WALL LINES			MINIMUM TOTAL LENGTH (FEET) OF BRACED WALL PANELS REQUIRED ALONG EACH BRACED WALL LINE[a]			
Ultimate Design Wind Speed (mph)	Story Location	Braced Wall Line Spacing (feet)	Method LIB[b]	Method GB	Methods DWB, WSP, SFB, PBS, PCP, HPS, BV-WSP, ABW, PFH, PFG, CS-SFB[c]	Methods CS-WSP, CS-G, CS-PF
≤ 140	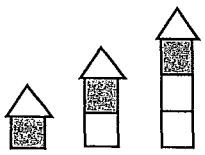	10	5.5	5.5	3.0	2.5
		20	10.0	10.0	5.5	5.0
		30	14.0	14.0	8.0	7.0
		40	18.0	18.0	10.5	9.0
		50	22.5	22.5	13.0	11.0
		60	26.5	26.5	15.0	13.0
	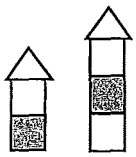	10	10.0	10.0	6.0	5.0
		20	18.5	18.5	11.0	9.0
		30	27.0	27.0	15.5	13.0
		40	35.0	35.0	20.0	17.0
		50	43.0	43.0	24.5	21.0
		60	51.0	51.0	29.0	25.0
	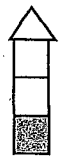	10	NP	15.0	8.5	7.5
		20	NP	27.5	16.0	13.5
		30	NP	39.5	23.0	19.5
		40	NP	51.5	29.5	25.0
		50	NP	63.5	36.5	31.0
		60	NP	75.5	43.0	36.5

For SI: 1 inch = 25.4 mm, 1 foot = 304.8 mm, 1 mile per hour = 0.447 m/s.

a. Linear interpolation shall be permitted.

b. Method LIB shall have gypsum board fastened to not less than one side with nails or screws in accordance with Table R602.3(1) for exterior sheathing or Table R702.3.5 for interior gypsum board. Spacing of fasteners at panel edges shall not exceed 8 inches.

c. Where a braced wall line has parallel braced wall lines on one or both sides of differing dimensions, the average dimension shall be permitted to be used for braced wall line spacing.

TABLE R602.10.3(2)
WIND ADJUSTMENT FACTORS TO THE REQUIRED LENGTH OF WALL BRACING

ITEM NUMBER	ADJUSTMENT BASED ON	STORY/SUPPORTING	CONDITION	ADJUSTMENT FACTOR[a, b] [multiply length from Table R602.10.3(1) by this factor]	APPLICABLE METHODS
1	Exposure category	One-story structure	B	1.00	All methods
			C	1.20	
			D	1.50	
		Two-story structure	B	1.00	
			C	1.30	
			D	1.60	
		Three-story structure	B	1.00	
			C	1.40	
			D	1.70	
2	Roof eave-to-ridge height	Roof only	≤ 5 feet	0.70	
			10 feet	1.00	
			15 feet	1.30	
			20 feet	1.60	
		Roof + 1 floor	≤ 5 feet	0.85	
			10 feet	1.00	
			15 feet	1.15	
			20 feet	1.30	
		Roof + 2 floors	≤ 5 feet	0.90	
			10 feet	1.00	
			15 feet	1.10	
			20 feet	Not permitted	
3	Wall height adjustment	Any story	8 feet	0.90	
			9 feet	0.95	
			10 feet	1.00	
			11 feet	1.05	
			12 feet	1.10	
4	Number of braced wall lines (per plan direction)[c]	Any story	2	1.00	
			3	1.30	
			4	1.45	
			≥ 5	1.60	
5	Additional 800-pound hold-down device	Top story only	Fastened to the end studs of each braced wall panel and to the foundation or framing below	0.80	DWB, WSP, SFB, PBS, PCP, HPS
6	Interior gypsum board finish (or equivalent)	Any story	Omitted from inside face of braced wall panels	1.40	DWB, WSP, SFB, PBS, PCP, HPS, CS-WSP, CS-G, CS-SFB
7	Gypsum board fastening	Any story	4 inches o.c. at panel edges, including top and bottom plates, and all horizontal joints blocked	0.7	GB

For SI: 1 inch = 25.4 mm, 1 foot = 304.8 mm, 1 pound = 4.48 N.

a. Linear interpolation shall be permitted.

b. The total adjustment factor is the product of all applicable adjustment factors.

c. The adjustment factor is permitted to be 1.0 when determining bracing amounts for intermediate braced wall lines provided the bracing amounts on adjacent braced wall lines are based on a spacing and number that neglects the intermediate braced wall line.

TABLE R602.10.3(3)
BRACING REQUIREMENTS BASED ON SEISMIC DESIGN CATEGORY

• SOIL CLASS D[b] • WALL HEIGHT = 10 FEET • 10 PSF FLOOR DEAD LOAD • 15 PSF ROOF/CEILING DEAD LOAD • BRACED WALL LINE SPACING ≤ 25 FEET			MINIMUM TOTAL LENGTH (FEET) OF BRACED WALL PANELS REQUIRED ALONG EACH BRACED WALL LINE[a]				
Seismic Design Category	Story Location	Braced Wall Line Length (feet)[c]	Method LIB[d]	Method GB	Methods DWB, SFB, PBS, PCP, HPS, CS-SFB[e]	Method WSP	Methods CS-WSP, CS-G
C (townhouses only)	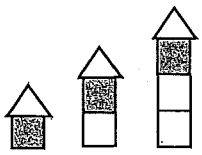	10	2.5	2.5	2.5	1.6	1.4
		20	5.0	5.0	5.0	3.2	2.7
		30	7.5	7.5	7.5	4.8	4.1
		40	10.0	10.0	10.0	6.4	5.4
		50	12.5	12.5	12.5	8.0	6.8
	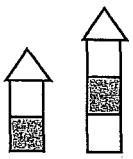	10	NP	4.5	4.5	3.0	2.6
		20	NP	9.0	9.0	6.0	5.1
		30	NP	13.5	13.5	9.0	7.7
		40	NP	18.0	18.0	12.0	10.2
		50	NP	22.5	22.5	15.0	12.8
	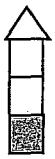	10	NP	6.0	6.0	4.5	3.8
		20	NP	12.0	12.0	9.0	7.7
		30	NP	18.0	18.0	13.5	11.5
		40	NP	24.0	24.0	18.0	15.3
		50	NP	30.0	30.0	22.5	19.1
D_0	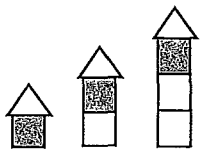	10	NP	2.8	2.8	1.8	1.6
		20	NP	5.5	5.5	3.6	3.1
		30	NP	8.3	8.3	5.4	4.6
		40	NP	11.0	11.0	7.2	6.1
		50	NP	13.8	13.8	9.0	7.7
	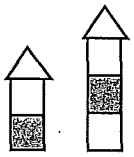	10	NP	5.3	5.3	3.8	3.2
		20	NP	10.5	10.5	7.5	6.4
		30	NP	15.8	15.8	11.3	9.6
		40	NP	21.0	21.0	15.0	12.8
		50	NP	26.3	26.3	18.8	16.0
	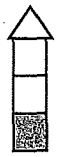	10	NP	7.3	7.3	5.3	4.5
		20	NP	14.5	14.5	10.5	9.0
		30	NP	21.8	21.8	15.8	13.4
		40	NP	29.0	29.0	21.0	17.9
		50	NP	36.3	36.3	26.3	22.3

(continued)

TABLE R602.10.3(3)—continued
BRACING REQUIREMENTS BASED ON SEISMIC DESIGN CATEGORY

• SOIL CLASS D[b] • WALL HEIGHT = 10 FEET • 10 PSF FLOOR DEAD LOAD • 15 PSF ROOF/CEILING DEAD LOAD • BRACED WALL LINE SPACING ≤ 25 FEET			MINIMUM TOTAL LENGTH (FEET) OF BRACED WALL PANELS REQUIRED ALONG EACH BRACED WALL LINE[a]				
Seismic Design Category	Story Location	Braced Wall Line Length (feet)[c]	Method LIB[d]	Method GB	Methods DWB, SFB, PBS, PCP, HPS, CS-SFB[e]	Method WSP	Methods CS-WSP, CS-G
D_1	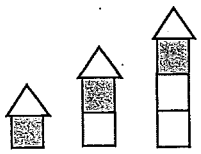	10	NP	3.0	3.0	2.0	1.7
		20	NP	6.0	6.0	4.0	3.4
		30	NP	9.0	9.0	6.0	5.1
		40	NP	12.0	12.0	8.0	6.8
		50	NP	15.0	15.0	10.0	8.5
	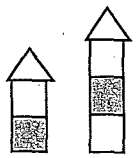	10	NP	6.0	6.0	4.5	3.8
		20	NP	12.0	12.0	9.0	7.7
		30	NP	18.0	18.0	13.5	11.5
		40	NP	24.0	24.0	18.0	15.3
		50	NP	30.0	30.0	22.5	19.1
	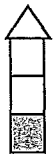	10	NP	8.5	8.5	6.0	5.1
		20	NP	17.0	17.0	12.0	10.2
		30	NP	25.5	25.5	18.0	15.3
		40	NP	34.0	34.0	24.0	20.4
		50	NP	42.5	42.5	30.0	25.5
D_2	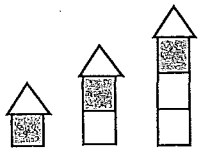	10	NP	4.0	4.0	2.5	2.1
		20	NP	8.0	8.0	5.0	4.3
		30	NP	12.0	12.0	7.5	6.4
		40	NP	16.0	16.0	10.0	8.5
		50	NP	20.0	20.0	12.5	10.6
	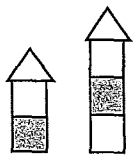	10	NP	7.5	7.5	5.5	4.7
		20	NP	15.0	15.0	11.0	9.4
		30	NP	22.5	22.5	16.5	14.0
		40	NP	30.0	30.0	22.0	18.7
		50	NP	37.5	37.5	27.5	23.4
	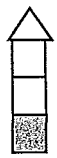	10	NP	NP	NP	NP	NP
		20	NP	NP	NP	NP	NP
		30	NP	NP	NP	NP	NP
		40	NP	NP	NP	NP	NP
		50	NP	NP	NP	NP	NP
	Cripple wall below one- or two-story dwelling	10	NP	NP	NP	7.5	6.4
		20	NP	NP	NP	15.0	12.8
		30	NP	NP	NP	22.5	19.1
		40	NP	NP	NP	30.0	25.5
		50	NP	NP	NP	37.5	31.9

For SI: 1 inch = 25.4 mm, 1 foot = 304.8 mm, 1 pound per square foot = 0.0479 kPa.

a. Linear interpolation shall be permitted.

b. Wall bracing lengths are based on a soil site class "D." Interpolation of bracing length between the S_{ds} values associated with the seismic design categories shall be permitted when a site-specific S_{ds} value is determined in accordance with Section 1613.3 of the *International Building Code*.

c. Where the braced wall line length is greater than 50 feet, braced wall lines shall be permitted to be divided into shorter segments having lengths of 50 feet or less, and the amount of bracing within each segment shall be in accordance with this table.

d. Method LIB shall have gypsum board fastened to not less than one side with nails or screws in accordance with Table R602.3(1) for exterior sheathing or Table R702.3.5 for interior gypsum board. Spacing of fasteners at panel edges shall not exceed 8 inches.

e. Method CS-SFB does not apply in Seismic Design Categories D_0, D_1 and D_2.

2649

TABLE R602.10.3(4)
SEISMIC ADJUSTMENT FACTORS TO THE REQUIRED LENGTH OF WALL BRACING

ITEM NUMBER	ADJUSTMENT BASED ON:	STORY	CONDITION	ADJUSTMENT FACTOR[a, b] [Multiply length from Table R602.10.3(3) by this factor]	APPLICABLE METHODS
1	Story height (Section 301.3)	Any story	≤ 10 feet	1.0	All methods
			> 10 feet and ≤ 12 feet	1.2	
2	Braced wall line spacing, townhouses in SDC C	Any story	≤ 35 feet	1.0	
			> 35 feet and ≤ 50 feet	1.43	
3	Braced wall line spacing, in SDC D_0, D_1, D_2[c]	Any story	> 25 feet and ≤ 30 feet	1.2	
			> 30 feet and ≤ 35 feet	1.4	
4	Wall dead load	Any story	> 8 psf and < 15 psf	1.0	
			< 8 psf	0.85	
5	Roof/ceiling dead load for wall supporting	1-, 2- or 3-story building	≤15 psf	1.0	
		2- or 3-story building	> 15 psf and ≤ 25 psf	1.1	
		1-story building	> 15 psf and ≤ 25 psf	1.2	
6	Walls with stone or masonry veneer, townhouses in SDC C[d, e]	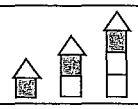	1.0		All methods
		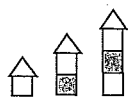	1.5		
		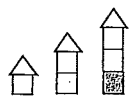	1.5		
7	Walls with stone or masonry veneer, detached one- and two-family dwellings in SDC $D_0 - D_2$[f]	Any story	See Table R602.10.6.5		BV-WSP
8	Interior gypsum board finish (or equivalent)	Any story	Omitted from inside face of braced wall panels	1.5	DWB, WSP, SFB, PBS, PCP, HPS, CS-WSP, CS-G, CS-SFB

For SI: 1 foot = 304.8 mm, 1 pound per square foot = 0.0479 kPa.

a. Linear interpolation shall be permitted.

b. The total length of bracing required for a given wall line is the product of all applicable adjustment factors.

c. The length-to-width ratio for the floor/roof *diaphragm* shall not exceed 3:1. The top plate lap splice nailing shall be in accordance with Table R602.3(1), Item 13.

d. Applies to stone or masonry veneer exceeding the first story height.

e. The adjustment factor for stone or masonry veneer shall be applied to all exterior *braced wall lines* and all *braced wall lines* on the interior of the building, backing or perpendicular to and laterally supported veneered walls.

f. See Section R602.10.6.5 for requirements where stone or masonry veneer does not exceed the first-story height.

TABLE R602.10.4
BRACING METHODS

METHODS, MATERIAL		MINIMUM THICKNESS	FIGURE	CONNECTION CRITERIA[a]	
				Fasteners	Spacing
Intermittent Bracing Method	**LIB** Let-in-bracing	1 × 4 wood or approved metal straps at 45° to 60° angles for maximum 16″ stud spacing		Wood: 2-8d common nails or 3-8d ($2^1/_2$″ long x 0.113″ dia.) nails	Wood: per stud and top and bottom plates
				Metal strap: per manufacturer	Metal: per manufacturer
	DWB Diagonal wood boards	$^3/_4$″(1″ nominal) for maximum 24″ stud spacing	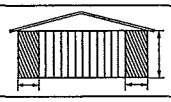	2-8d ($2^1/_2$″ long × 0.113″ dia.) nails or 2 - $1^3/_4$″ long staples	Per stud
	WSP Wood structural panel (See Section R604)	$^3/_8$″	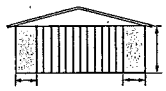	Exterior sheathing per Table R602.3(3)	6″ edges 12″ field
				Interior sheathing per Table R602.3(1) or R602.3(2)	Varies by fastener
	BV-WSP[e] Wood structural panels with stone or masonry veneer (See Section R602.10.6.5)	$^7/_{16}$″	See Figure R602.10.6.5	8d common ($2^1/_2$″ × 0.131) nails	4″ at panel edges 12″ at intermediate supports 4″ at braced wall panel end posts
	SFB Structural fiberboard sheathing	$^1/_2$″ or $^{25}/_{32}$″ for maximum 16″ stud spacing	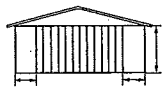	$1^1/_2$″ long × 0.12″ dia. (for $^1/_2$″ thick sheathing) $1^3/_4$″ long × 0.12″ dia. (for $^{25}/_{32}$″ thick sheathing) galvanized roofing nails or 8d common ($2^1/_2$″ long × 0.131″ dia.) nails	3″ edges 6″ field
	GB Gypsum board	$^1/_2$″	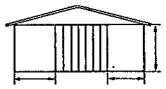	Nails or screws per Table R602.3(1) for exterior locations	For all braced wall panel locations: 7″ edges (including top and bottom plates) 7″ field
				Nails or screws per Table R702.3.5 for interior locations	
	PBS Particleboard sheathing (See Section R605)	$^3/_8$″ or $^1/_2$″ for maximum 16″ stud spacing	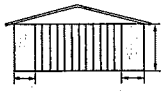	For $^3/_8$″, 6d common (2″ long × 0.113″ dia.) nails For $^1/_2$″, 8d common ($2^1/_2$″ long × 0.131″ dia.) nails	3″ edges 6″ field
	PCP Portland cement plaster	See Section R703.6 for maximum 16″ stud spacing	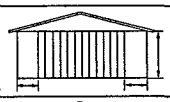	$1^1/_2$″ long, 11 gage, $^7/_{16}$″ dia. head nails or $^7/_8$″ long, 16 gage staples	6″ o.c. on all framing members
	HPS Hardboard panel siding	$^7/_{16}$″ for maximum 16″ stud spacing	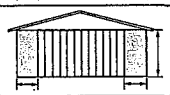	0.092″ dia., 0.225″ dia. head nails with length to accommodate $1^1/_2$″ penetration into studs	4″ edges 8″ field
	ABW Alternate braced wall	$^3/_8$″		See Section R602.10.6.1	See Section R602.10.6.1

(continued)

TABLE R602.10.4—continued
BRACING METHODS

	METHODS, MATERIAL	MINIMUM THICKNESS	FIGURE	CONNECTION CRITERIA[a]	
				Fasteners	Spacing
Intermittent Bracing Methods	**PFH** Portal frame with hold-downs	$^3/_8$"	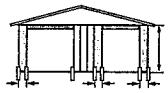	See Section R602.10.6.2	See Section R602.10.6.2
Intermittent Bracing Methods	**PFG** Portal frame at garage	$^7/_{16}$"	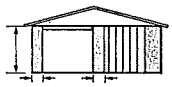	See Section R602.10.6.3	See Section R602.10.6.3
Continuous Sheathing Methods	**CS-WSP** Continuously sheathed wood structural panel	$^3/_8$"	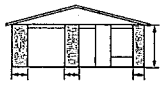	Exterior sheathing per Table R602.3(3)	6" edges 12" field
				Interior sheathing per Table R602.3(1) or R602.3(2)	Varies by fastener
Continuous Sheathing Methods	**CS-G**[b,c] Continuously sheathed wood structural panel adjacent to garage openings	$^3/_8$"		See Method CS-WSP	See Method CS-WSP
Continuous Sheathing Methods	**CS-PF** Continuously sheathed portal frame	$^7/_{16}$"		See Section R602.10.6.4	See Section R602.10.6.4
Continuous Sheathing Methods	**CS-SFB**[d] Continuously sheathed structural fiberboard	$^1/_2$" or $^{25}/_{32}$" for maximum 16" stud spacing	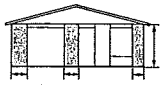	$1^1/_2$" long × 0.12" dia. (for $^1/_2$" thick sheathing) $1^3/_4$" long × 0.12" dia. (for $^{25}/_{32}$" thick sheathing) galvanized roofing nails or 8d common ($2^1/_2$" long × 0.131" dia.) nails	3" edges 6" field

For SI: 1 inch = 25.4 mm, 1 foot = 304.8 mm, 1 degree = 0.0175 rad, 1 pound per square foot = 47.8 N/m^2, 1 mile per hour = 0.447 m/s.

a. Adhesive attachment of wall sheathing, including Method GB, shall not be permitted in Seismic Design Categories C, D_0, D_1 and D_2.

b. Applies to panels next to garage door opening where supporting gable end wall or roof load only. Shall only be used on one wall of the garage. In Seismic Design Categories D_0, D_1 and D_2 roof covering dead load shall not exceed 3 psf.

c. Garage openings adjacent to a Method CS-G panel shall be provided with a header in accordance with Table R502.5(1). A full-height clear opening shall not be permitted adjacent to a Method CS-G panel.

d. Method CS-SFB does not apply in Seismic Design Categories D_0, D_1 and D_2.

e. Method applies to detached one- and two-family dwellings in Seismic Design Categories D_0 through D_2 only.

TABLE R602.10.5
MINIMUM LENGTH OF BRACED WALL PANELS

METHOD (See Table R602.10.4)		MINIMUM LENGTH[a] (inches) Wall Height					CONTRIBUTING LENGTH (inches)
		8 feet	9 feet	10 feet	11 feet	12 feet	
DWB, WSP, SFB, PBS, PCP, HPS, BV-WSP		48	48	48	53	58	Actual[b]
GB		48	48	48	53	58	Double sided = Actual Single sided = 0.5 × Actual
LIB		55	62	69	NP	NP	Actual[b]
ABW	SDC A, B and C, ultimate design wind speed < 140 mph	28	32	34	38	42	48
	SDC D_0, D_1 and D_2, ultimate design wind speed < 140 mph	32	32	34	NP	NP	
PFH	Supporting roof only	16	16	16	18[c]	20[c]	48
	Supporting one story and roof	24	24	24	27[c]	29[c]	48
PFG		24	27	30	33[d]	36[d]	1.5 × Actual[b]
CS-G		24	27	30	33	36	Actual[b]
CS-PF	SDC A, B and C	16	18	20	22[e]	24[e]	1.5 × Actual[b]
	SDC D_0, D_1 and D_2	16	18	20	22[e]	24[e]	Actual[b]
CS-WSP, CS-SFB	Adjacent clear opening height (inches)						
	≤ 64	24	27	30	33	36	Actual[b]
	68	26	27	30	33	36	
	72	27	27	30	33	36	
	76	30	29	30	33	36	
	80	32	30	30	33	36	
	84	35	32	32	33	36	
	88	38	35	33	33	36	
	92	43	37	35	35	36	
	96	48	41	38	36	36	
	100	—	44	40	38	38	
	104	—	49	43	40	39	
	108	—	54	46	43	41	
	112	—	—	50	45	43	
	116	—	—	55	48	45	
	120	—	—	60	52	48	
	124	—	—	—	56	51	
	128	—	—	—	61	54	
	132	—	—	—	66	58	
	136	—	—	—	—	62	
	140	—	—	—	—	66	
	144	—	—	—	—	72	

For SI: 1 inch = 25.4 mm, 1 foot = 304.8 mm, 1 mile per hour = 0.447 m/s.
NP = Not Permitted.
a. Linear interpolation shall be permitted.
b. Use the actual length where it is greater than or equal to the minimum length.
c. Maximum header height for PFH is 10 feet in accordance with Figure R602.10.6.2, but wall height shall be permitted to be increased to 12 feet with pony wall.
d. Maximum opening height for PFG is 10 feet in accordance with Figure R602.10.6.3, but wall height shall be permitted to be increased to 12 feet with pony wall.
e. Maximum opening height for CS-PF is 10 feet in accordance with Figure R602.10.6.4, but wall height shall be permitted to be increased to 12 feet with pony wall.

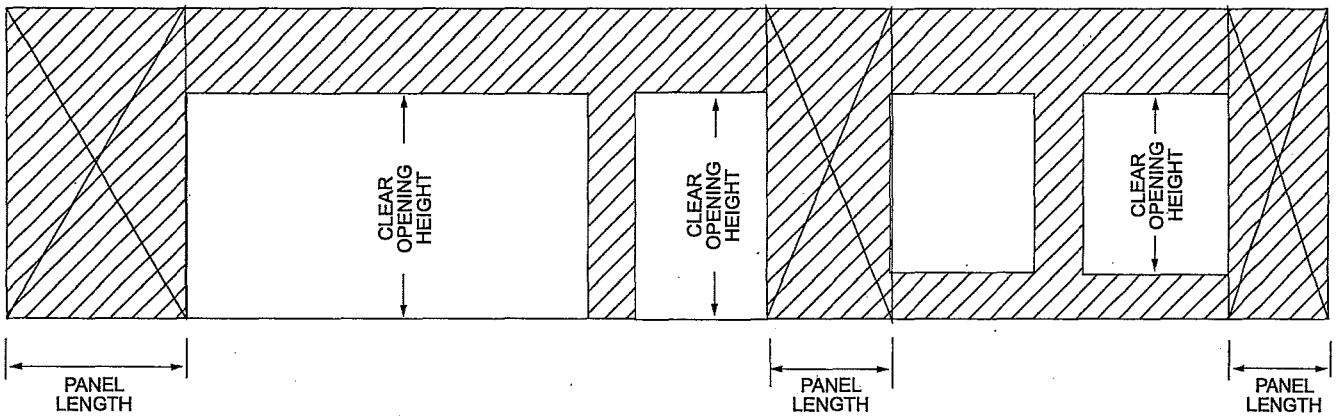

FIGURE R602.10.5
BRACED WALL PANELS WITH CONTINUOUS SHEATHING

TABLE R602.10.5.2
PARTIAL CREDIT FOR BRACED WALL PANELS LESS THAN 48 INCHES IN ACTUAL LENGTH

ACTUAL LENGTH OF BRACED WALL PANEL (Inches)	CONTRIBUTING LENGTH OF BRACED WALL PANEL (inches)[a]	
	8-foot Wall Height	9-foot Wall Height
48	48	48
42	36	36
36	27	N/A

For SI: 1 inch = 25.4 mm, 1 foot = 304.8 mm.
N/A = Not Applicable.
a. Linear interpolation shall be permitted.

R602.10.6 Construction of Methods ABW, PFH, PFG, CS-PF and BV-WSP. Methods ABW, PFH, PFG, CS-PF and BV-WSP shall be constructed as specified in Sections R602.10.6.1 through R602.10.6.5.

R602.10.6.1 Method ABW: Alternate braced wall panels. Method ABW *braced wall panels* shall be constructed in accordance with Figure R602.10.6.1. The hold-down force shall be in accordance with Table R602.10.6.1.

R602.10.6.2 Method PFH: Portal frame with hold-downs. Method PFH *braced wall panels* shall be constructed in accordance with Figure R602.10.6.2.

R602.10.6.3 Method PFG: Portal frame at garage door openings in Seismic Design Categories A, B and C. Where supporting a roof or one story and a roof, a Method PFG *braced wall panel* constructed in accordance with Figure R602.10.6.3 shall be permitted on either side of garage door openings.

R602.10.6.4 Method CS-PF: Continuously sheathed portal frame. Continuously sheathed portal frame *braced wall panels* shall be constructed in accordance with Figure R602.10.6.4 and Table R602.10.6.4. The number of continuously sheathed portal frame panels in a single *braced wall line* shall not exceed four.

R602.10.6.5 Wall bracing for dwellings with stone and masonry veneer in Seismic Design Categories D_0, D_1 and D_2. Where stone and masonry veneer are installed in accordance with Section R703.8, wall bracing on exterior *braced wall lines* and *braced wall lines* on the interior of the building, backing or perpendicular to and laterally supporting veneered walls shall comply with this section.

Where dwellings in Seismic Design Categories D_0, D_1 and D_2 have stone or masonry veneer installed in accordance with Section R703.7, and the veneer does not exceed the first-story height, wall bracing shall be in accordance with Section R602.10.3.

Where detached one- or two-family dwellings in Seismic Design Categories D_0, D_1 and D_2 have stone or masonry veneer installed in accordance with Section R703.7, and the veneer exceeds the first-*story height*, wall bracing at exterior *braced wall lines* and *braced wall lines* on the interior of the building shall be constructed using Method BV-WSP in accordance with this section and Figure R602.10.6.5. Cripple walls shall not be permitted, and required interior *braced wall lines* shall be supported on continuous foundations.

Townhouses in Seismic Design Categories D_0, D_1 and D_2 with stone or masonry veneer exceeding the first-story height shall be designed in accordance with accepted engineering practice.

R602.10.6.5.1 Length of bracing. The length of bracing along each *braced wall line* shall be the greater of that required by the ultimate design wind speed and *braced wall line* spacing in accordance with Table R602.10.3(1) as adjusted by the factors in Table R602.10.3(2) or the seismic design category

and *braced wall line* length in accordance with Table R602.10.6.5. Angled walls shall be permitted to be counted in accordance with Section R602.10.1.4, and *braced wall panel* location shall be in accordance with Section R602.10.2.2. Spacing between *braced wall lines* shall be in accordance with Table R602.10.1.3. The seismic adjustment factors in Table R602.10.3(4) shall not be applied to the length of bracing determined using Table R602.10.6.5, except that the bracing amount increase for braced wall line spacing greater than 25 feet (7620 mm) in accordance with Table R602.10.1.3 shall be required. The minimum total length of bracing in a braced wall line, after all adjustments have been taken, shall not be less than 48 inches (1219 mm) total.

TABLE R602.10.6.1
MINIMUM HOLD-DOWN FORCES FOR METHOD ABW BRACED WALL PANELS

SEISMIC DESIGN CATEGORY AND WIND SPEED	SUPPORTING/STORY	HOLD-DOWN FORCE (pounds)				
		Height of Braced Wall Panel				
		8 feet	9 feet	10 feet	11 feet	12 feet
SDC A, B and C Ultimate design wind speed < 140 mph	One story	1,800	1,800	1,800	2,000	2,200
	First of two stories	3,000	3,000	3,000	3,300	3,600
SDC D_0, D_1 and D_2 Ultimate design wind speed <140 mph	One story	1,800	1,800	1,800	NP	NP
	First of two stories	3,000	3,000	3,000	NP	NP

For SI: 1 inch = 25.4 mm, 1 foot = 304.8 mm, 1 pound = 4.45 N, 1 mile per hour = 0.447 m/s.
NP = Not Permitted.

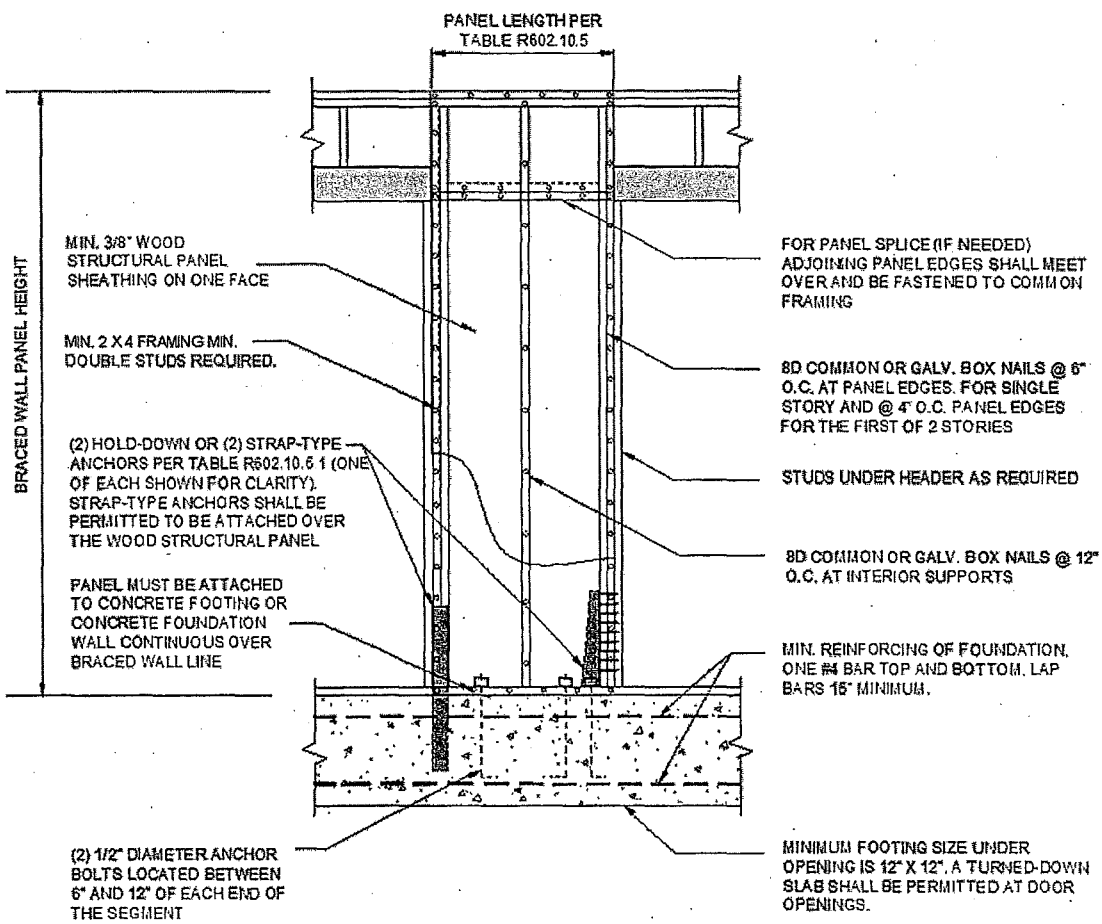

For SI: 1 inch = 25.4 mm.

FIGURE R602.10.6.1
METHOD ABW—ALTERNATE BRACED WALL PANEL

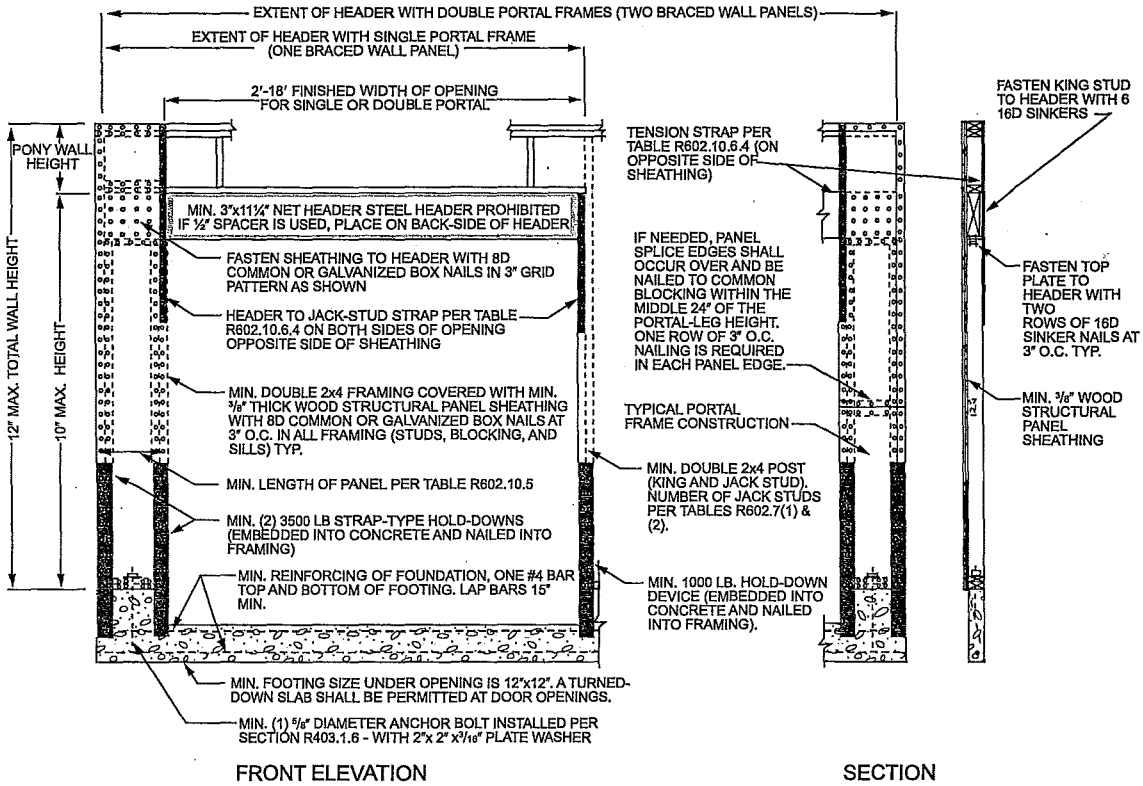

For SI: 1 inch = 25.4 mm, 1 foot = 304.8 mm.

FIGURE R602.10.6.2
METHOD PFH—PORTAL FRAME WITH HOLD-DOWNS

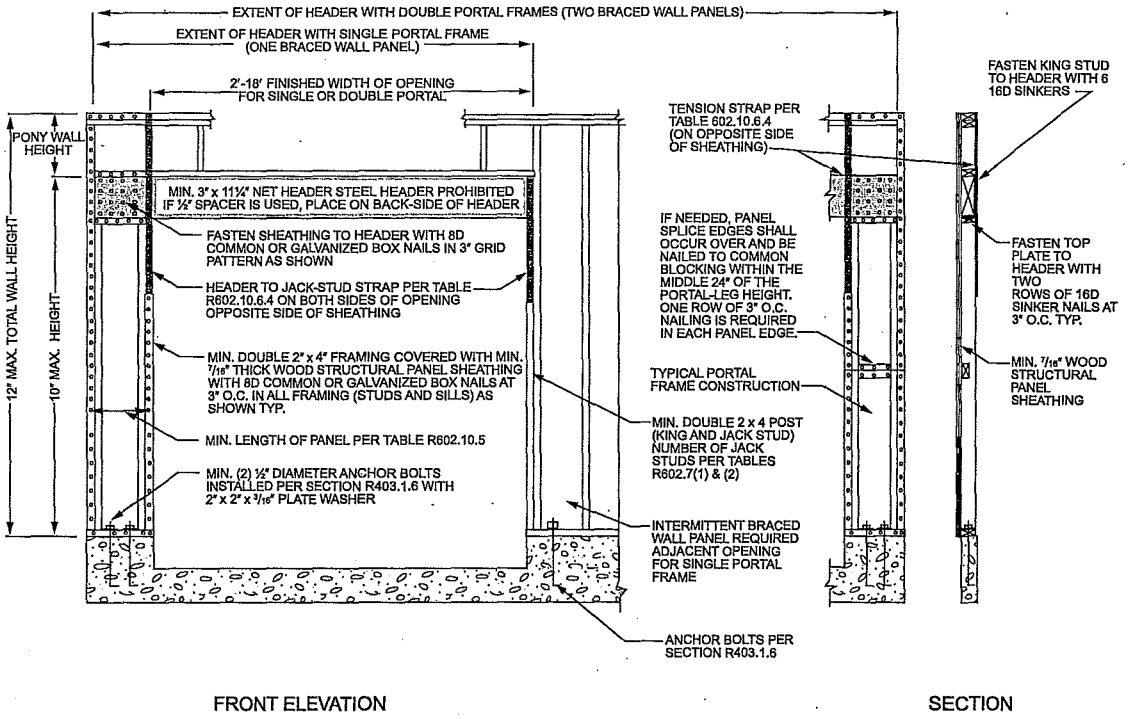

For SI: 1 inch = 25.4 mm, 1 foot = 304.8 mm.

FIGURE R602.10.6.3
METHOD PFG—PORTAL FRAME AT GARAGE DOOR OPENINGS IN SEISMIC DESIGN CATEGORIES A, B AND C

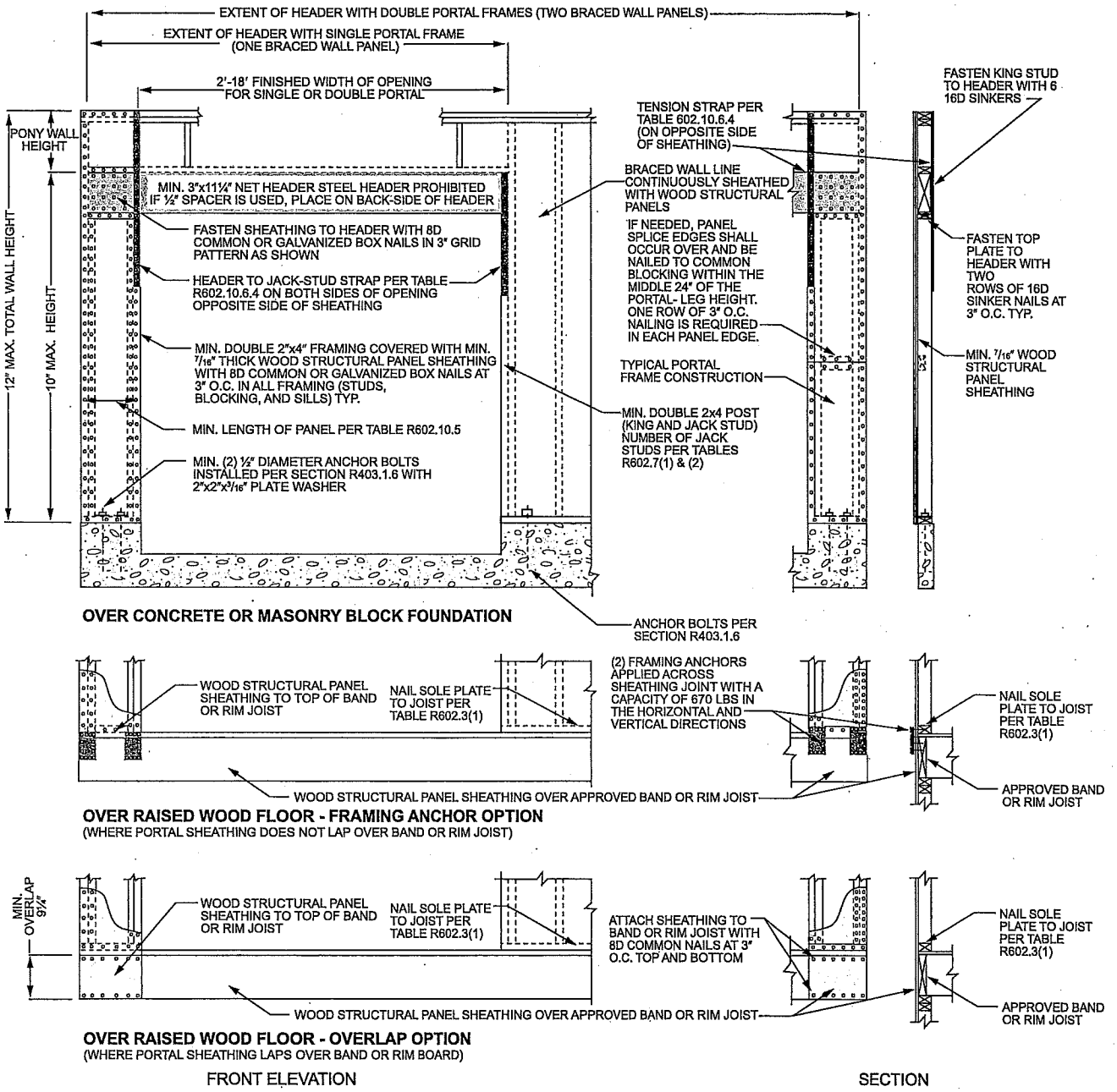

For SI: 1 inch = 25.4 mm, 1 foot = 304.8 mm.

FIGURE R602.10.6.4
METHOD CS-PF—CONTINUOUSLY SHEATHED PORTAL FRAME PANEL CONSTRUCTION

TABLE R602.10.6.4
TENSION STRAP CAPACITY FOR RESISTING WIND PRESSURES PERPENDICULAR TO METHODS PFH, PFG AND CS-PF BRACED WALL PANELS

MINIMUM WALL STUD FRAMING NOMINAL SIZE AND GRADE	MAXIMUM PONY WALL HEIGHT (feet)	MAXIMUM TOTAL WALL HEIGHT (feet)	MAXIMUM OPENING WIDTH (feet)	TENSION STRAP CAPACITY REQUIRED (pounds)[a,b]					
				Ultimate Design Wind Speed V_{ult} (mph)					
				110	115	130	110	115	130
				Exposure B			Exposure C		
2 × 4 No. 2 Grade	0	10	18	1,000	1,000	1,000	1,000	1,000	1,050
	1	10	9	1,000	1,000	1,000	1,000	1,000	1,750
			16	1,000	1,025	2,050	2,075	2,500	3,950
			18	1,000	1,275	2,375	2,400	2,850	DR
	2	10	9	1,000	1,000	1,475	1,500	1,875	3,125
			16	1,775	2,175	3,525	3,550	4,125	DR
			18	2,075	2,500	3,950	3,975	DR	DR
	2	12	9	1,150	1,500	2,650	2,675	3,175	DR
			16	2,875	3,375	DR	DR	DR	DR
			18	3,425	3,975	DR	DR	DR	DR
	4	12	9	2,275	2,750	DR	DR	DR	DR
			12	3,225	3,775	DR	DR	DR	DR
2 × 6 Stud Grade	2	12	9	1,000	1,000	1,700	1,700	2,025	3,050
			16	1,825	2,150	3,225	3,225	3,675	DR
			18	2,200	2,550	3,725	3,750	DR	DR
	4	12	9	1,450	1,750	2,700	2,725	3,125	DR
			16	2,050	2,400	DR	DR	DR	DR
			18	3,350	3,800	DR	DR	DR	DR

For SI: 1 inch = 25.4 mm, 1 mile per hour = 0.447 m/s.
a. DR = Design Required.
b. Straps shall be installed in accordance with manufacturer's recommendations.

TABLE R602.10.6.5
METHOD BV-WSP WALL BRACING REQUIREMENTS

SEISMIC DESIGN CATEGORY	STORY	BRACED WALL LINE LENGTH (FEET)					SINGLE-STORY HOLD-DOWN FORCE (pounds)[a]	CUMULATIVE HOLD-DOWN FORCE (pounds)[b]
		10	20	30	40	50		
		Minimum Total Length (feet) of Braced Wall Panels Required Along each Braced Wall Line						
D_0		4.0	7.0	10.5	14.0	17.5	N/A	—
		4.0	7.0	10.5	14.0	17.5	1900	—
	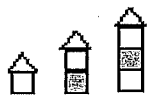	4.5	9.0	13.5	18.0	22.5	3500	5400
		6.0	12.0	18.0	24.0	30.0	3500	8900
D_1		4.5	9.0	13.5	18.0	22.5	2100	—
	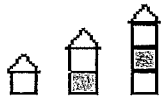	4.5	9.0	13.5	18.0	22.5	3700	5800
		6.0	12.0	18.0	24.0	30.0	3700	9500
D_2	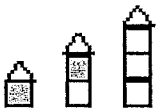	5.5	11.0	16.5	22.0	27.5	2300	—
	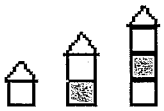	5.5	11.0	16.5	22.0	27.5	3900	6200
	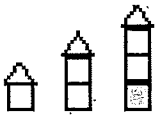	NP	NP	NP	NP	NP	N/A	N/A

For SI: 1 inch = 25.4 mm, 1 foot = 304.8 mm, 1 pound per square foot = 0.479 kPa, 1 pound-force = 4.448 N.

NP = Not Permitted.

N/A = Not Applicable.

a. Hold-down force is minimum allowable stress design load for connector providing uplift tie from wall framing at end of braced wall panel at the noted story to wall framing at end of braced wall panel at the story below, or to foundation or foundation wall. Use single-story hold-down force where edges of braced wall panels do not align; a continuous load path to the foundation shall be maintained.

b. Where hold-down connectors from stories above align with stories below, use cumulative hold-down force to size middle- and bottom-story hold-down connectors.

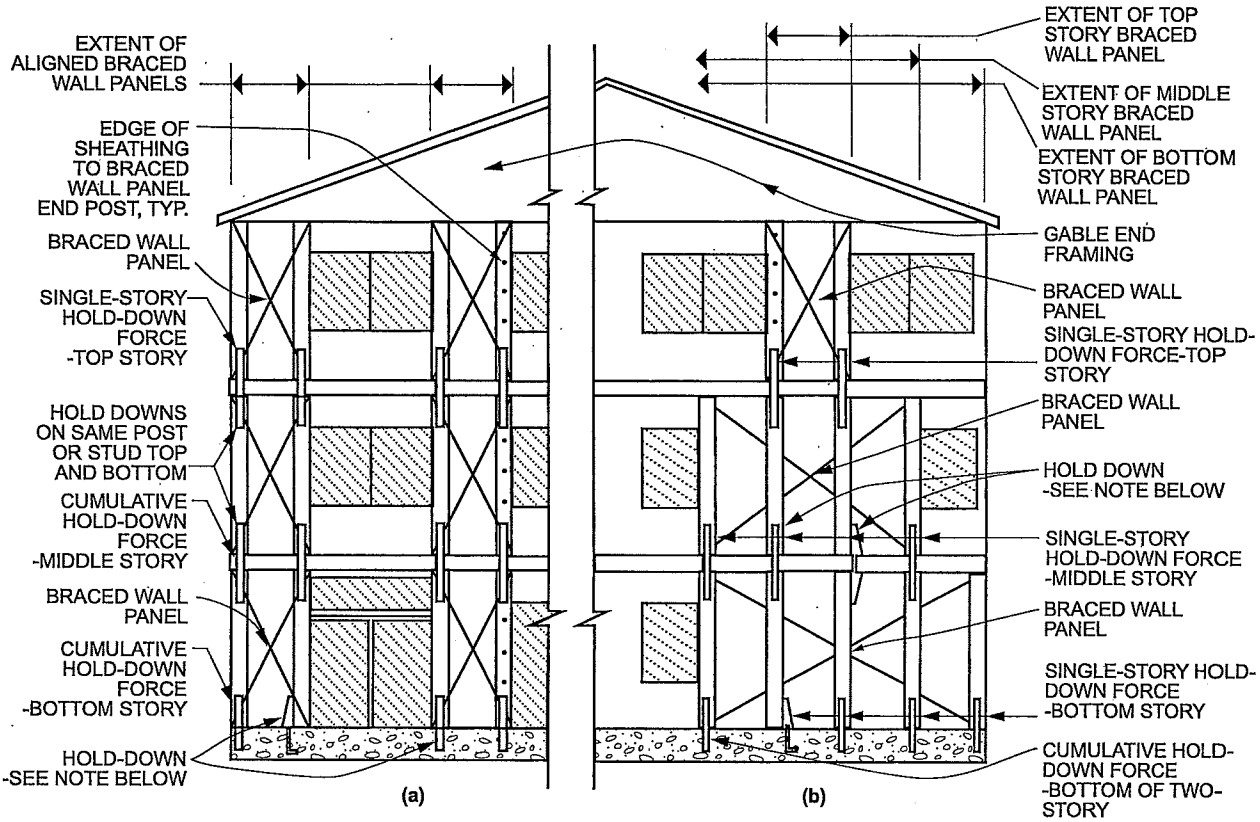

(a) Braced wall panels stacked (aligned story to story). Use cumulative hold-down force.

Braced wall panels mixed stacked and not stacked. Use hold-down force as noted.

Note: Hold downs should be strap ties, tension ties, or other approved hold-down devices and shall be installed in accordance with the manufacturer's instructions.

FIGURE R602.10.6.5
METHOD BV-WSP—WALL BRACING FOR DWELLINGS WITH STONE AND MASONRY VENEER IN SEISMIC DESIGN CATEGORIES D_0, D_1 and D_2

R602.10.7 Ends of braced wall lines with continuous sheathing. Each end of a *braced wall line* with continuous sheathing shall have one of the conditions shown in Figure R602.10.7.

R602.10.8 Braced wall panel connections. *Braced wall panels* shall be connected to floor framing or foundations as follows:

1. Where joists are perpendicular to a *braced wall panel* above or below, a rim joist, band joist or blocking shall be provided along the entire length of the *braced wall panel* in accordance with Figure R602.10.8(1). Fastening of top and bottom wall plates to framing, rim joist, band joist and/or blocking shall be in accordance with Table R602.3(1).
2. Where joists are parallel to a *braced wall panel* above or below, a rim joist, end joist or other parallel framing member shall be provided directly above and below the *braced wall panel* in accordance with Figure R602.10.8(2). Where a parallel framing member cannot be located directly above and below the panel, full-depth blocking at 16-inch (406 mm) spacing shall be provided between the parallel framing members to each side of the *braced wall panel* in accordance with Figure R602.10.8(2). Fastening of blocking and wall plates shall be in accordance with Table R602.3(1) and Figure R602.10.8(2).
3. Connections of *braced wall panels* to concrete or masonry shall be in accordance with Section R403.1.6.

R602.10.8.1 Braced wall panel connections for Seismic Design Categories D_0, D_1 and D_2. *Braced wall panels* shall be fastened to required foundations in accordance with Section R602.11.1, and top plate lap splices shall be face-nailed with not less than eight 16d nails on each side of the splice.

R602.10.8.2 Connections to roof framing. Top plates of exterior *braced wall panels* shall be attached to rafters or roof trusses above in accordance with Table R602.3(1) and this section. Where required by this section, blocking between rafters or roof trusses shall be attached to top plates of *braced wall panels* and to rafters and roof trusses in accordance with Table R602.3(1). A continuous band, rim or header joist or roof truss parallel to the *braced wall panels* shall be permitted to replace the blocking required by this section. Blocking shall not be required over openings in

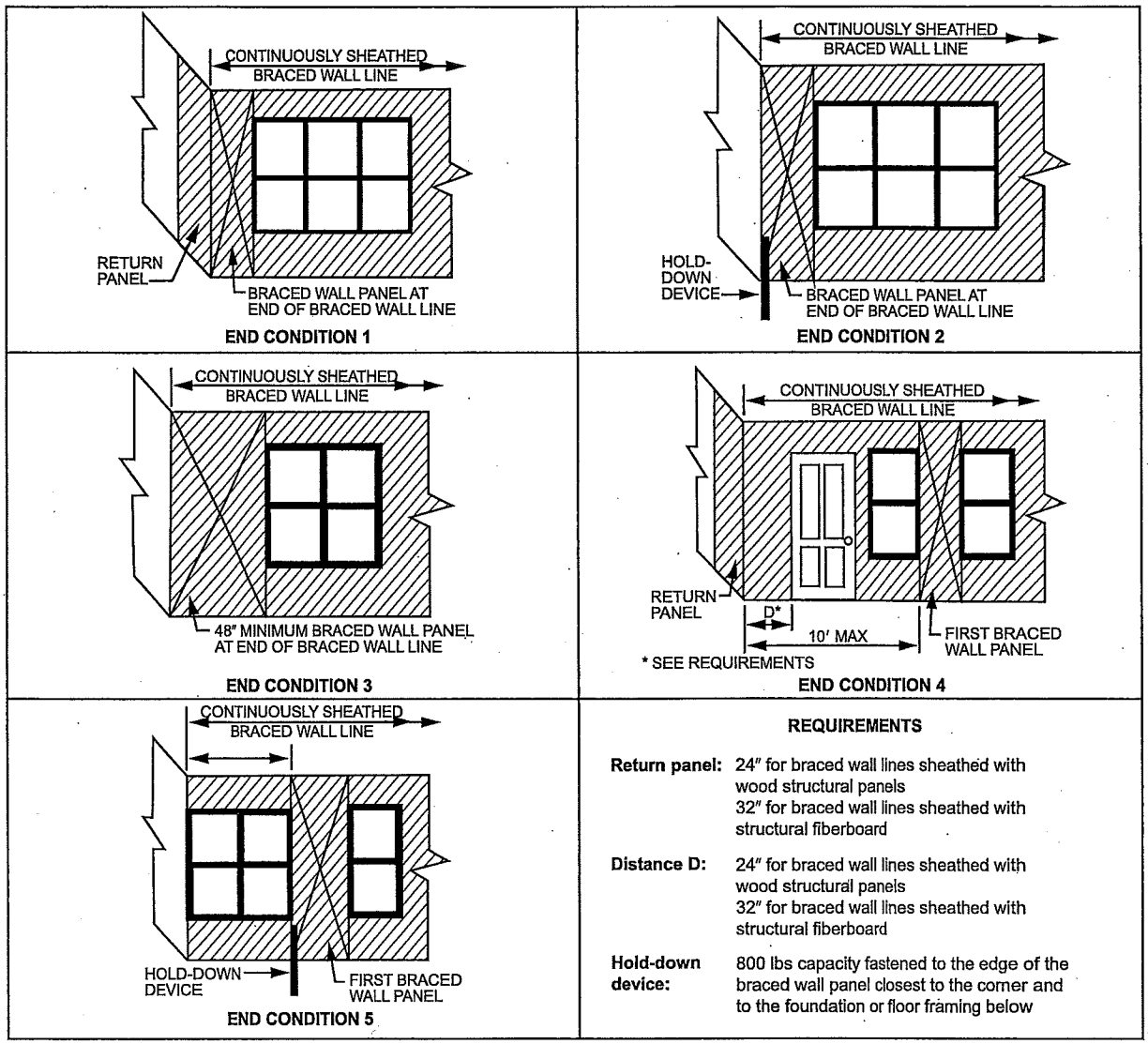

For SI: 1 inch = 25.4 mm, 1 foot = 304.8 mm, 1 pound = 4.45 N.

FIGURE R602.10.7
END CONDITIONS FOR BRACED WALL LINES WITH CONTINUOUS SHEATHING

continuously sheathed *braced wall lines*. In addition to the requirements of this section, lateral support shall be provided for rafters and ceiling joists in accordance with Section R802.8 and for trusses in accordance with Section R802.10.3. Roof ventilation shall be provided in accordance with Section R806.1.

1. For Seismic Design Categories A, B and C where the distance from the top of the braced wall panel to the top of the rafters or roof trusses above is $9^1/_4$ inches (235 mm) or less, blocking between rafters or roof trusses shall not be required. Where the distance from the top of the braced wall panel to the top of the rafters or roof trusses above is between $9^1/_4$ inches (235 mm) and $15^1/_4$ inches (387 mm), blocking between rafters or roof trusses shall be provided above the braced wall panel in accordance with Figure R602.10.8.2(1).

   Exception: Where the outside edge of truss vertical web members aligns with the outside face of the wall studs below, wood structural panel sheathing extending above the top plate as shown in Figure R602.10.8.2(3) shall be permitted to be fastened to each truss web with three-8d nails ($2^1/_2$ inches × 0.131 inch) and blocking between the trusses shall not be required.

2. For Seismic Design Categories D_0, D_1 and, where the distance from the top of the braced wall panel to the top of the rafters or roof trusses is $15^1/_4$ inches (387 mm) or less, blocking between rafters or roof trusses shall be provided above the braced wall panel in accordance with Figure R602.10.8.2(1).

3. Where the distance from the top of the braced wall panel to the top of rafters or roof trusses exceeds $15^1/_4$ inches (387 mm), the top plates of the braced wall panel shall be connected to perpendicular raf-

2661

ters or roof trusses above in accordance with one or more of the following methods:

3.1. Soffit blocking panels constructed in accordance with Figure R602.10.8.2(2).

3.2. Vertical blocking panels constructed in accordance with Figure R602.10.8.2(3).

3.3. Blocking panels provided by the roof truss manufacturer and designed in accordance with Section R802.

3.4. Blocking, blocking panels or other methods of lateral load transfer designed in accordance with the AWC WFCM or accepted engineering practice.

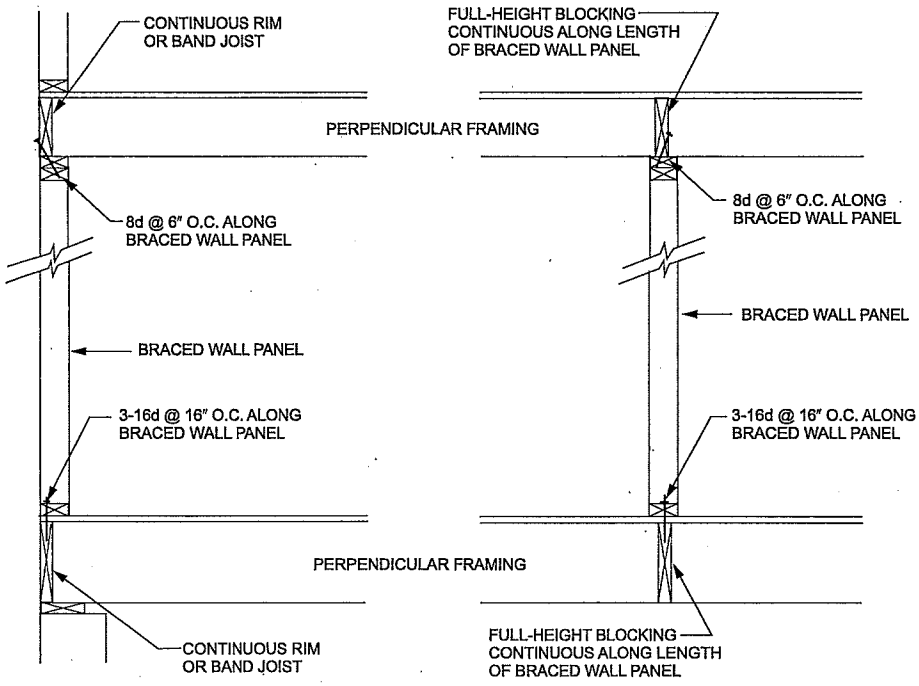

For SI: 1 inch = 25.4 mm.

FIGURE R602.10.8(1)
BRACED WALL PANEL CONNECTION WHEN PERPENDICULAR TO FLOOR/CEILING FRAMING

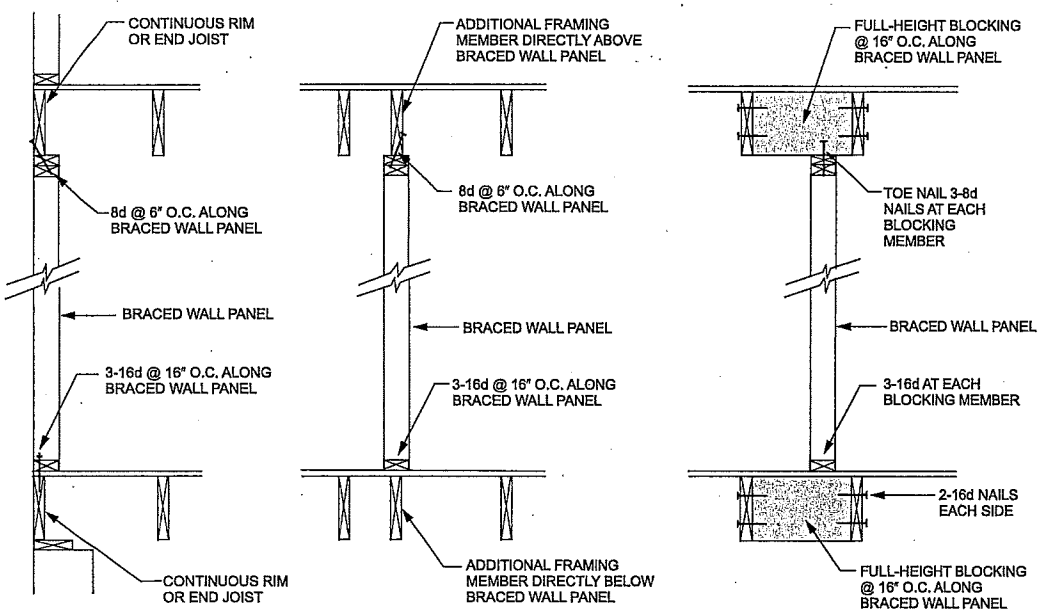

For SI: 1 inch = 25.4 mm.

FIGURE R602.10.8(2)
BRACED WALL PANEL CONNECTION WHEN PARALLEL TO FLOOR/CEILING FRAMING

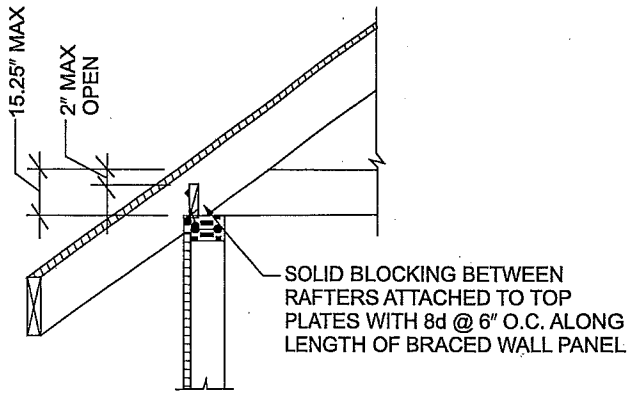

For SI: 1 inch = 25.4 mm.

FIGURE R602.10.8.2(1)
BRACED WALL PANEL CONNECTION TO PERPENDICULAR RAFTERS

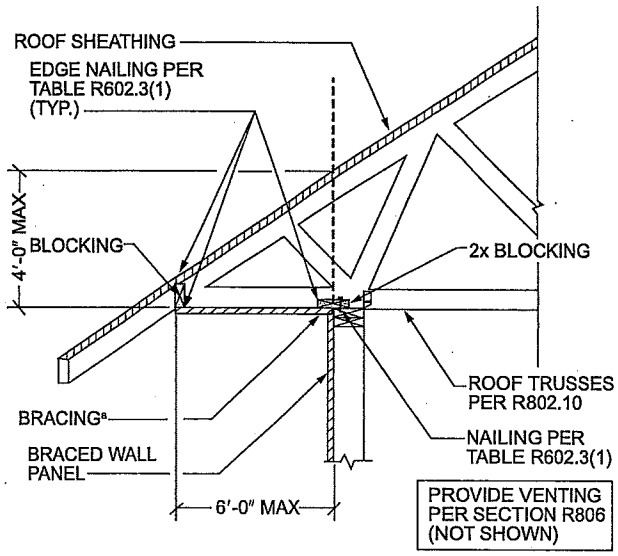

For SI: 1 inch = 25.4 mm, 1 foot = 304.8 mm.

a. Methods of bracing shall be as described in Section R602.10.4.

FIGURE R602.10.8.2(2)
BRACED WALL PANEL CONNECTION OPTION TO PERPENDICULAR RAFTERS OR ROOF TRUSSES

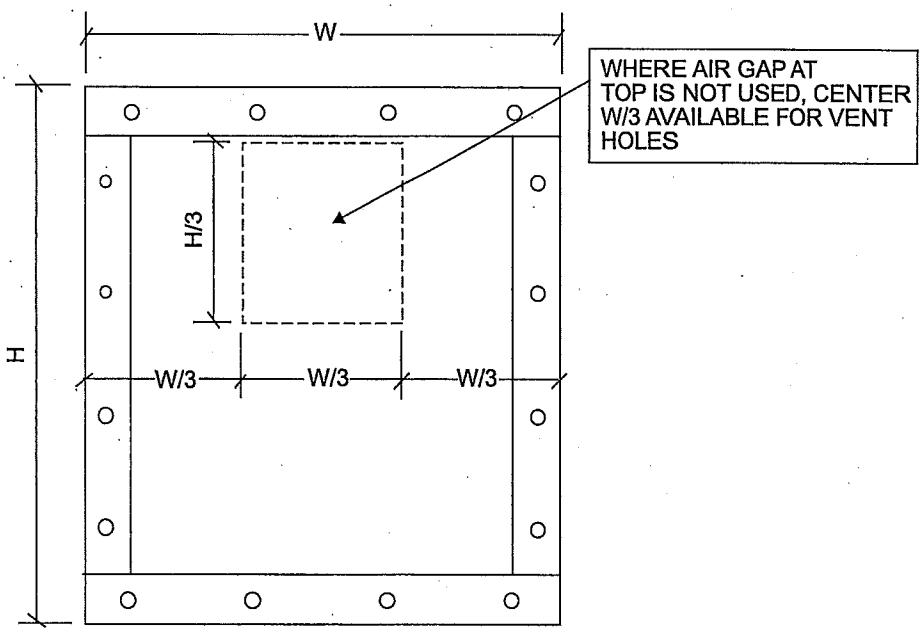

FIGURE R602.10.8.2(3)
BRACED WALL PANEL CONNECTION OPTION TO PERPENDICULAR RAFTERS OR ROOF TRUSSES

R602.10.9 Braced wall panel support. *Braced wall panel* support shall be provided as follows:

1. Cantilevered floor joists complying with Section R502.3.3 shall be permitted to support *braced wall panels*.
2. Raised floor system post or pier foundations supporting *braced wall panels* shall be designed in accordance with accepted engineering practice.
3. Masonry stem walls with a length of 48 inches (1219 mm) or less supporting *braced wall panels* shall be reinforced in accordance with Figure R602.10.9. Masonry stem walls with a length greater than 48 inches (1219 mm) supporting *braced wall panels* shall be constructed in accordance with Section R403.1 Methods ABW and PFH shall not be permitted to attach to masonry stem walls.
4. Concrete stem walls with a length of 48 inches (1219 mm) or less, greater than 12 inches (305 mm) tall and less than 6 inches (152 mm) thick shall have reinforcement sized and located in accordance with Figure R602.10.9.

R602.10.9.1 Braced wall panel support for Seismic Design Categories D_0, D_1 and D_2. In Seismic Design Categories D_0, D_1 and D_2, braced wall panel footings shall be as specified in Section R403.1.2.

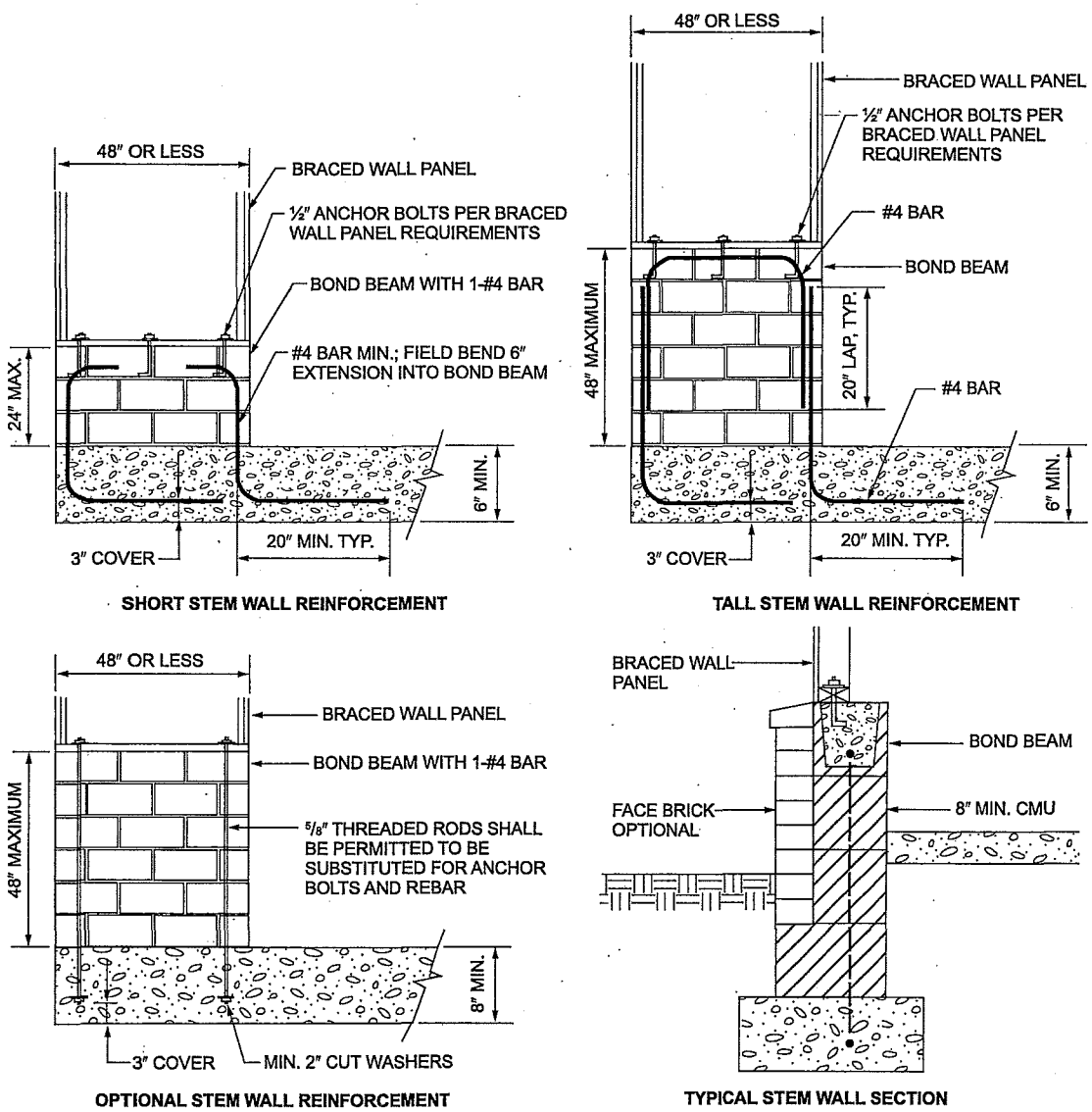

NOTE: GROUT BOND BEAMS AND ALL CELLS THAT CONTAIN REBAR, THREADED RODS AND ANCHOR BOLTS.

For SI: 1 inch = 25.4 mm.

FIGURE R602.10.9
MASONRY STEM WALLS SUPPORTING BRACED WALL PANELS

2664

R602.10.10 Panel joints. Vertical joints of panel sheathing shall occur over, and be fastened to, common studs. Horizontal joints in *braced wall panels* shall occur over, and be fastened to, common blocking of a minimum $1^1/_2$ inch (38 mm) thickness.

Exceptions:

1. Vertical joints of panel sheathing shall be permitted to occur over double studs, where adjoining panel edges are attached to separate studs with the required panel edge fastening schedule, and the adjacent studs are attached together with two rows of 10d box nails [3 inches by 0.128 inch (76.2 mm by 3.25 mm)] at 10 inches o.c. (254 mm).
2. Blocking at horizontal joints shall not be required in wall segments that are not counted as *braced wall panels*.
3. Where the bracing length provided is not less than twice the minimum length required by Tables R602.10.3(1) and R602.10.3(3), blocking at horizontal joints shall not be required in *braced wall panels* constructed using Methods WSP, SFB, GB, PBS or HPS.
4. Where Method GB panels are installed horizontally, blocking of horizontal joints is not required.

R602.10.11 Cripple wall bracing. Cripple walls shall be constructed in accordance with Section R602.9 and braced in accordance with this section. Cripple walls shall be braced with the length and method of bracing used for the wall above in accordance with Tables R602.10.3(1) and R602.10.3(3), and the applicable adjustment factors in Table R602.10.3(2) or R602.10.3(4), respectively, except that the length of cripple wall bracing shall be multiplied by a factor of 1.15. Where gypsum wall board is not used on the inside of the cripple wall bracing, the length adjustments for the elimination of the gypsum wallboard, or equivalent, shall be applied as directed in Tables R602.10.3(2) and R602.10.3(4) to the length of cripple wall bracing required. This adjustment shall be taken in addition to the 1.15 increase.

R602.10.11.1 Cripple wall bracing for Seismic Design Categories D_0 and D_1 and townhouses in Seismic Design Category C. In addition to the requirements in Section R602.10.11, the distance between adjacent edges of *braced wall panels* for cripple walls along a *braced wall line* shall be 14 feet (4267 mm) maximum.

Where *braced wall lines* at interior walls are not supported on a continuous foundation below, the adjacent parallel cripple walls, where provided, shall be braced with Method WSP or Method CS-WSP in accordance with Section R602.10.4. The length of bracing required in accordance with Table R602.10.3(3) for the cripple walls shall be multiplied by 1.5. Where the cripple walls do not have sufficient length to provide the required bracing, the spacing of panel edge fasteners shall be reduced to 4 inches (102 mm) on center and the required bracing length adjusted by 0.7. If the required length can still not be provided, the cripple wall shall be designed in accordance with accepted engineering practice.

R602.10.11.2 Cripple wall bracing for Seismic Design Category D_2. In Seismic Design Category D_2, cripple walls shall be braced in accordance with Tables R602.10.3(3) and R602.10.3(4).

R602.10.11.3 Redesignation of cripple walls. Where all cripple wall segments along a *braced wall line* do not exceed 48 inches (1219 mm) in height, the cripple walls shall be permitted to be redesignated as a first-*story* wall for purposes of determining wall bracing requirements. Where any cripple wall segment in a *braced wall line* exceeds 48 inches (1219 mm) in height, the entire cripple wall shall be counted as an additional *story*. If the cripple walls are redesignated, the stories above the redesignated *story* shall be counted as the second and third stories, respectively.

R602.11 Wall anchorage. *Braced wall line* sills shall be anchored to concrete or masonry foundations in accordance with Sections R403.1.6 and R602.11.1.

R602.11.1 Wall anchorage for all buildings in Seismic Design Categories D_0, D_1 and D_2 and townhouses in Seismic Design Category C. Plate washers, not less than 0.229 inch by 3 inches by 3 inches (5.8 mm by 76 mm by 76 mm) in size, shall be provided between the foundation sill plate and the nut except where *approved* anchor straps are used. The hole in the plate washer is permitted to be diagonally slotted with a width of up to $^3/_{16}$ inch (5 mm) larger than the bolt diameter and a slot length not to exceed $1^3/_4$ inches (44 mm), provided a standard cut washer is placed between the plate washer and the nut.

R602.11.2 Stepped foundations in Seismic Design Categories D_0, D_1 and D_2. In all buildings located in Seismic Design Categories D_0, D_1 or D_2, where the height of a required *braced wall line* that extends from foundation to floor above varies more than 4 feet (1219 mm), the *braced wall line* shall be constructed in accordance with the following:

1. Where the lowest floor framing rests directly on a sill bolted to a foundation not less than 8 feet (2440 mm) in length along a line of bracing, the line shall be considered as braced. The double plate of the cripple stud wall beyond the segment of footing that extends to the lowest framed floor shall be spliced by extending the upper top plate not less than 4 feet (1219 mm) along the foundation. Anchor bolts shall be located not more than 1 foot and 3 feet (305 and 914 mm) from the step in the foundation. See Figure R602.11.2.
2. Where cripple walls occur between the top of the foundation and the lowest floor framing, the bracing requirements of Sections R602.10.11, R602.10.11.1 and R602.10.11.2 shall apply.
3. Where only the bottom of the foundation is stepped and the lowest floor framing rests directly on a sill bolted to the foundations, the requirements of Sections R403.1.6 and R602.11.1 shall apply.

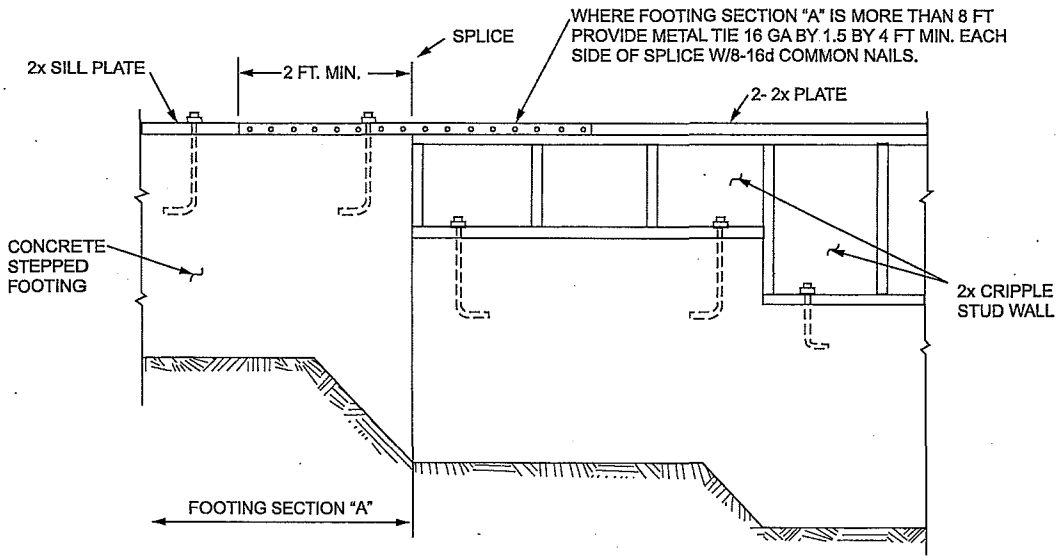

For SI: 1 inch = 25.4 mm, 1 foot = 304.8 mm.
Note: Where footing Section "A" is less than 8 feet long in a 25-foot-long wall, install bracing at cripple stud wall.

FIGURE R602.11.2
STEPPED FOUNDATION CONSTRUCTION

R602.12 Simplified wall bracing. Buildings meeting all of the conditions listed below shall be permitted to be braced in accordance with this section as an alternate to the requirements of Section R602.10. The entire building shall be braced in accordance with this section; the use of other bracing provisions of Section R602.10, except as specified herein, shall not be permitted.

1. There shall be not more than three stories above the top of a concrete or masonry foundation or basement wall. Permanent wood foundations shall not be permitted.
2. Floors shall not cantilever more than 24 inches (607 mm) beyond the foundation or bearing wall below.
3. Wall height shall not be greater than 10 feet (2743 mm).
4. The building shall have a roof eave-to-ridge height of 15 feet (4572 mm) or less.
5. Exterior walls shall have gypsum board with a minimum thickness of $^1/_2$ inch (12.7 mm) installed on the interior side fastened in accordance with Table R702.3.5.
6. The structure shall be located where the ultimate design wind speed is less than or equal to 130 mph (58 m/s), and the exposure category is B or C.
7. The structure shall be located in Seismic Design Category A, B or C for detached one- and two-family dwellings or Seismic Design Category A or B for townhouses.
8. Cripple walls shall not be permitted in three-story buildings.

R602.12.1 Circumscribed rectangle. The bracing required for each building shall be determined by circumscribing a rectangle around the entire building on each floor as shown in Figure R602.12.1. The rectangle shall surround all enclosed offsets and projections such as sunrooms and attached garages. Open structures, such as carports and decks, shall be permitted to be excluded. The rectangle shall not have a side greater than 60 feet (18 288 mm), and the ratio between the long side and short side shall be not greater than 3:1.

R602.12.2 Sheathing materials. The following sheathing materials installed on the exterior side of exterior walls shall be used to construct a bracing unit as defined in Section R602.12.3. Mixing materials is prohibited.

1. Wood structural panels with a minimum thickness of $^3/_8$ inch (9.5 mm) fastened in accordance with Table R602.3(3).
2. Structural fiberboard sheathing with a minimum thickness of $^1/_2$ inch (12.7 mm) fastened in accordance with Table R602.3(1).

R602.12.3 Bracing unit. A bracing unit shall be a full-height sheathed segment of the exterior wall without openings or vertical or horizontal offsets and a minimum length as specified herein. Interior walls shall not contribute toward the amount of required bracing. Mixing of Items 1 and 2 is prohibited on the same story.

1. Where all framed portions of all exterior walls are sheathed in accordance with Section R602.12.2, including wall areas between bracing units, above and below openings and on gable end walls, the minimum length of a bracing unit shall be 3 feet (914 mm).
2. Where the exterior walls are braced with sheathing panels in accordance with Section R602.12.2 and areas between bracing units are covered with other materials, the minimum length of a bracing unit shall be 4 feet (1219 mm).

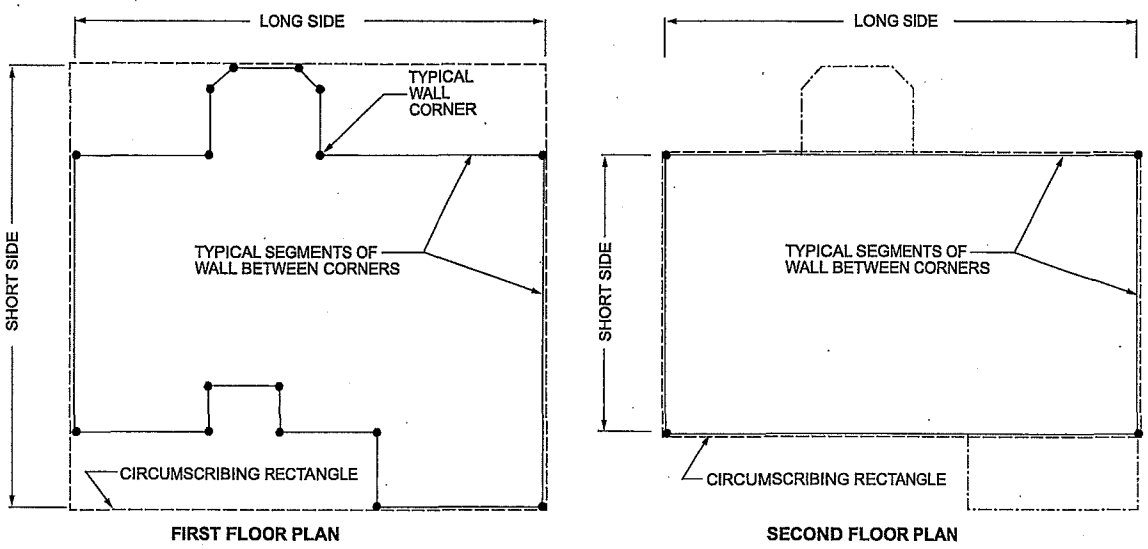

FIGURE R602.12.1
RECTANGLE CIRCUMSCRIBING AN ENCLOSED BUILDING

R602.12.3.1 Multiple bracing units. Segments of wall compliant with Section R602.12.3 and longer than the minimum bracing unit length shall be considered as multiple bracing units. The number of bracing units shall be determined by dividing the wall segment length by the minimum bracing unit length. Full-height sheathed segments of wall narrower than the minimum bracing unit length shall not contribute toward a bracing unit except as specified in Section R602.12.6.

R602.12.4 Number of bracing units. Each side of the circumscribed rectangle, as shown in Figure R602.12.1, shall have, at a minimum, the number of bracing units in accordance with Table R602.12.4 placed on the parallel exterior walls facing the side of the rectangle. Bracing units shall then be placed using the distribution requirements specified in Section R602.12.5.

R602.12.5 Distribution of bracing units. The placement of bracing units on exterior walls shall meet all of the following requirements as shown in Figure R602.12.5.

1. A bracing unit shall begin not more than 12 feet (3658 mm) from any wall corner.
2. The distance between adjacent edges of bracing units shall be not greater than 20 feet (6096 mm).
3. Segments of wall greater than 8 feet (2438 mm) in length shall have not less than one bracing unit.

R602.12.6 Narrow panels. The bracing methods referenced in Section R602.10 and specified in Sections R602.12.6.1 through R602.12.6.3 shall be permitted when using simplified wall bracing.

R602.12.6.1 Method CS-G. *Braced wall panels* constructed as Method CS-G in accordance with Tables R602.10.4 and R602.10.5 shall be permitted for one-story garages where all framed portions of all exterior walls are sheathed with wood structural panels. Each CS-G panel shall be equivalent to 0.5 of a bracing unit. Segments of wall that include a Method CS-G panel shall meet the requirements of Section R602.10.4.2.

R602.12.6.2 Method CS-PF. Braced wall panels constructed as Method CS-PF in accordance with Section R602.10.6.4 shall be permitted where all framed portions of all exterior walls are sheathed with wood structural panels. Each CS-PF panel shall equal 0.75 bracing units. Not more than four CS-PF panels shall be permitted on all segments of walls parallel to each side of the circumscribed rectangle. Segments of wall that include a Method CS-PF panel shall meet the requirements of Section R602.10.4.2.

R602.12.6.3 Methods ABW, PFH and PFG. Braced wall panels constructed as Method ABW, PFH and PFG shall be permitted where bracing units are constructed using wood structural panels applied either continuously or intermittently. Each ABW and PFH panel shall equal one bracing unit and each PFG panel shall be equal to 0.75 bracing unit.

R602.12.7 Lateral support. For bracing units located along the eaves, the vertical distance from the outside edge of the top wall plate to the roof sheathing above shall not exceed 9.25 inches (235 mm) at the location of a bracing unit unless lateral support is provided in accordance with Section R602.10.8.2.

R602.12.8 Stem walls. Masonry stem walls with a height and length of 48 inches (1219 mm) or less supporting a bracing unit or a Method CS-G, CS-PF or PFG *braced wall panel* shall be constructed in accordance with Figure R602.10.9. Concrete stem walls with a length of 48 inches (1219 mm) or less, greater than 12 inches (305 mm) tall and less than 6 inches (152 mm) thick shall be reinforced sized and located in accordance with Figure R602.10.9.

TABLE R602.12.4
MINIMUM NUMBER OF BRACING UNITS ON EACH SIDE OF THE CIRCUMSCRIBED RECTANGLE

ULTIMATE DESIGN WIND SPEED (mph)	STORY LEVEL	EAVE-TO-RIDGE HEIGHT (feet)	MINIMUM NUMBER OF BRACING UNITS ON EACH LONG SIDE[a, b, d]						MINIMUM NUMBER OF BRACING UNITS ON EACH SHORT SIDE[a, b, d]					
			Length of short side (feet)[c]						Length of long side (feet)[c]					
			10	20	30	40	50	60	10	20	30	40	50	60
115		10	1	2	2	2	3	3	1	2	2	2	3	3
			2	3	3	4	5	6	2	3	3	4	5	6
			2	3	4	6	7	8	2	3	4	6	7	8
		15	1	2	3	3	4	4	1	2	3	3	4	4
			2	3	4	5	6	7	2	3	4	5	6	7
			2	4	5	6	7	9	2	4	5	6	7	9
130		10	1	2	2	3	3	4	1	2	2	3	3	4
			2	3	4	5	6	7	2	3	4	5	6	7
			2	4	5	7	8	10	2	4	5	7	8	10
		15	2	3	3	4	4	6	2	3	3	4	4	6
			3	4	6	7	8	10	3	4	6	7	8	10
			3	6	7	10	11	13	3	6	7	10	11	13

For SI: 1 inch = 25.4 mm, 1 foot = 304.8 mm.

a. Interpolation shall not be permitted.

b. Cripple walls or wood-framed basement walls in a walk-out condition shall be designated as the first story and the stories above shall be redesignated as the second and third stories, respectively, and shall be prohibited in a three-story structure.

c. Actual lengths of the sides of the circumscribed rectangle shall be rounded to the next highest unit of 10 when using this table.

d. For Exposure Category C, multiply bracing units by a factor of 1.20 for a one-story building, 1.30 for a two-story building and 1.40 for a three-story building.

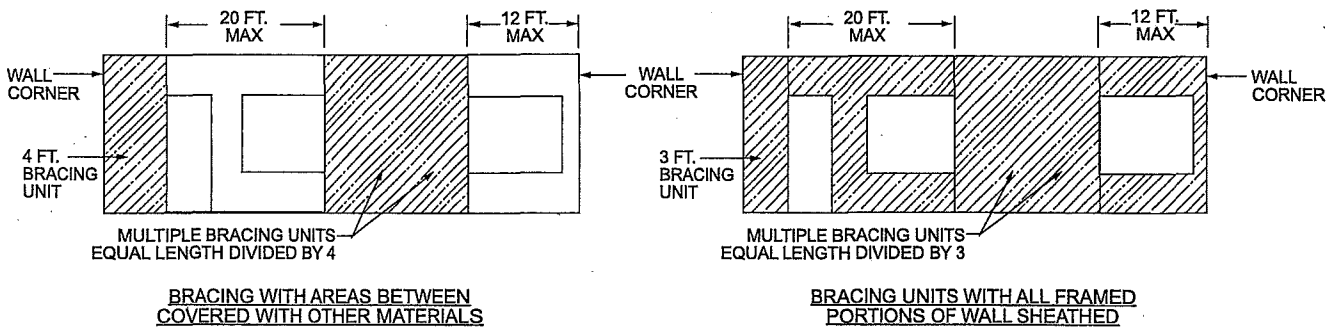

For SI: 1 foot = 304.8 mm.

FIGURE R602.12.5
BRACING UNIT DISTRIBUTION

SECTION R603
COLD-FORMED STEEL WALL FRAMING

R603.1 General. Elements shall be straight and free of any defects that would significantly affect structural performance. Cold-formed steel wall framing members shall be in accordance with the requirements of this section.

R603.1.1 Applicability limits. The provisions of this section shall control the construction of exterior cold-formed steel wall framing and interior load-bearing cold-formed steel wall framing for buildings not more than 60 feet (18 288 mm) long perpendicular to the joist or truss span, not more than 40 feet (12 192 mm) wide parallel to the joist or truss span, and less than or equal to three stories above grade plane. Exterior walls installed in accordance with the provisions of this section shall be considered as load-bearing walls. Cold-formed steel walls constructed in accordance with the provisions of this section shall be limited to sites where the ultimate design wind speed is less than 139 miles per hour (62 m/s), Exposure Category B or C, and the ground snow load is less than or equal to 70 pounds per square foot (3.35 kPa).

R603.1.2 In-line framing. Load-bearing cold-formed steel studs constructed in accordance with Section R603 shall be located in-line with joists, trusses and rafters in accordance with Figure R603.1.2 and the tolerances specified as follows:

1. The maximum tolerance shall be $^3/_4$ inch (19 mm) between the centerline of the horizontal framing member and the centerline of the vertical framing member.
2. Where the centerline of the horizontal framing member and bearing stiffener is located to one side of the centerline of the vertical framing member, the maximum tolerance shall be $^1/_8$ inch (3 mm) between the web of the horizontal framing member and the edge of the vertical framing member.

R603.2 Structural framing. Load-bearing cold-formed steel wall framing members shall be in accordance with this section.

R603.2.1 Material. Load-bearing cold-formed steel framing members shall be cold formed to shape from structural-quality sheet steel complying with the requirements of ASTM A 1003: Structural Grades 33 Type H and 50 Type H.

R603.2.2 Corrosion protection. Load-bearing cold-formed steel framing shall have a metallic coating complying with ASTM A 1003 and one of the following:

1. A minimum of G 60 in accordance with ASTM A 653.
2. A minimum of AZ 50 in accordance with ASTM A 792.

R603.2.3 Dimension, thickness and material grade. Load-bearing cold-formed steel wall framing members shall comply with Figure R603.2.3(1) and with the dimensional and thickness requirements specified in Table R603.2.3. Additionally, C-shaped sections shall have a minimum flange width of $1^5/_8$ inches (41 mm) and a maximum flange width of 2 inches (51 mm). The minimum lip size for C-shaped sections shall be $^1/_2$ inch (12.7 mm). Track sections shall comply with Figure R603.2.3(2) and shall have a minimum flange width of $1^1/_4$ inches (32 mm). Minimum Grade 33 ksi steel shall be used wherever 33 mil and 43 mil thicknesses are specified. Minimum Grade 50 ksi steel shall be used wherever 54 and 68 mil thicknesses are specified.

R603.2.4 Identification. Load-bearing cold-formed steel framing members shall have a legible label, stencil, stamp or embossment with the following information as a minimum:

1. Manufacturer's identification.
2. Minimum base steel thickness in inches (mm).
3. Minimum coating designation.
4. Minimum yield strength, in kips per square inch (ksi) (MPa).

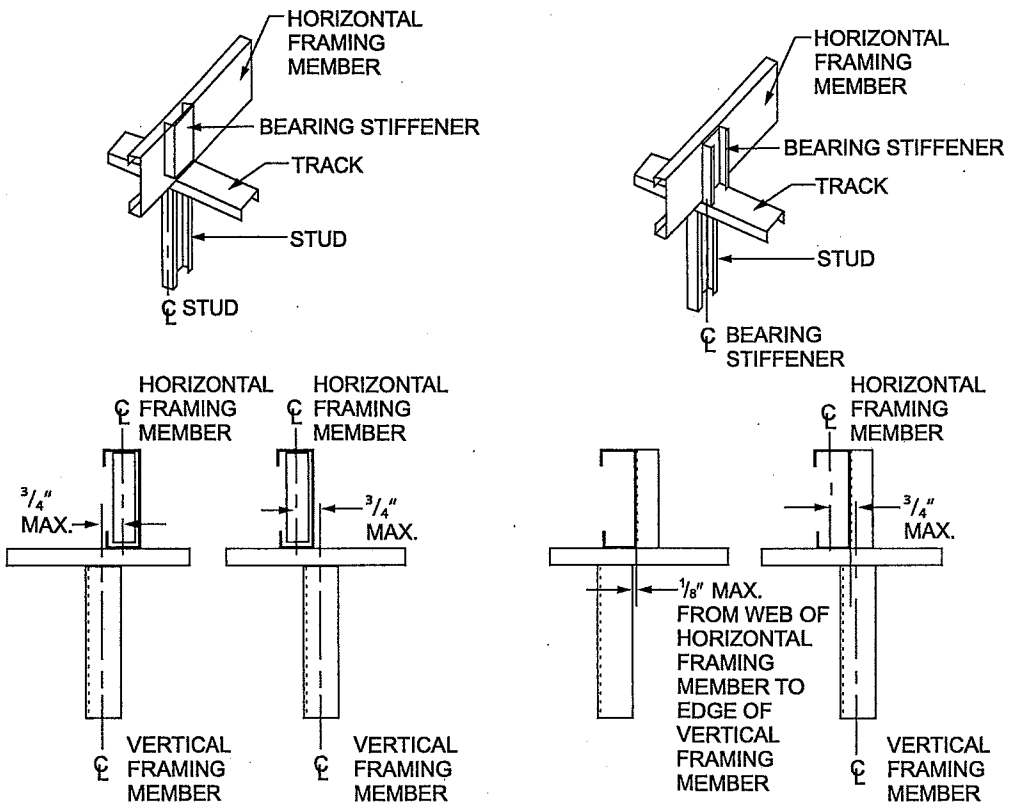

For SI: 1 inch = 25.4 mm,

FIGURE R603.1.2
IN-LINE FRAMING

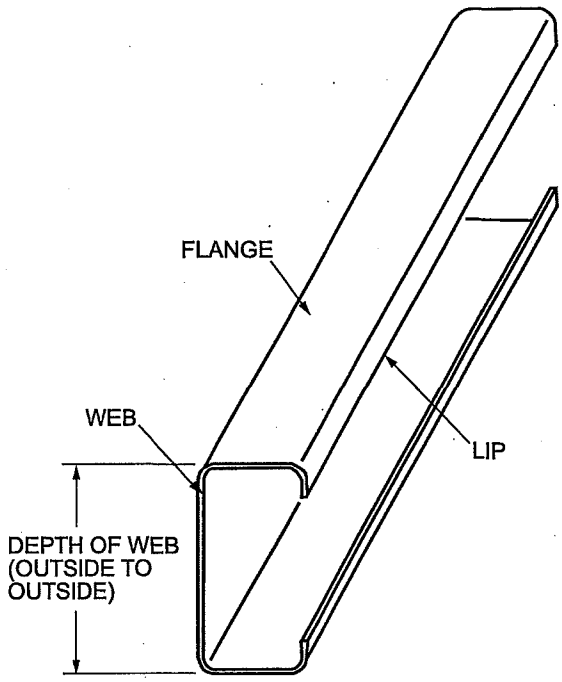

FIGURE R603.2.3(1)
C-SHAPED SECTION

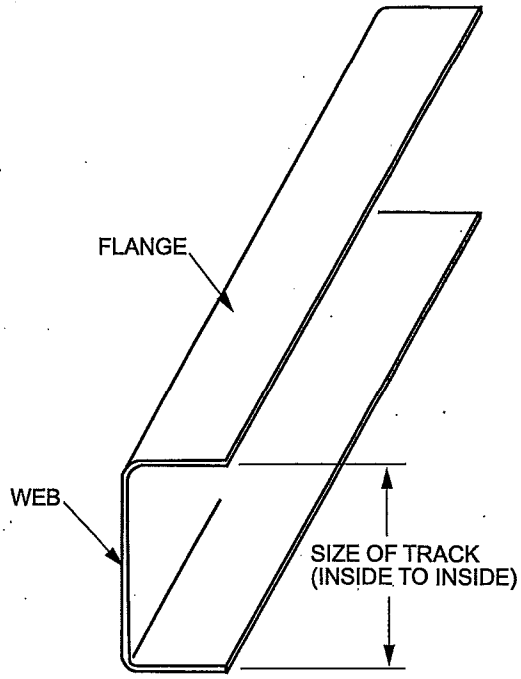

FIGURE R603.2.3(2)
TRACK SECTION

TABLE R603.2.3
LOAD-BEARING COLD-FORMED STEEL STUD SIZES AND THICKNESSES

MEMBER DESIGNATION[a]	WEB DEPTH (inches)	MINIMUM BASE STEEL THICKNESS mil (Inches)
350S162-t	3.5	33 (0.0329), 43 (0.0428), 54 (0.0538)
550S162-t	5.5	33 (0.0329), 43 (0.0428), 54 (0.0538), 68 (0.0677)

For SI: 1 inch = 25.4 mm; 1 mil = 0.0254 mm.

a. The member designation is defined by the first number representing the member depth in hundredths of an inch, "S" representing a stud or joist member, the second number representing the flange width in hundredths of an inch, and the letter "t" shall be a number representing the minimum base metal thickness in mils.

R603.2.5 Fastening. Screws for steel-to-steel connections shall be installed with a minimum edge distance and center-to-center spacing of $^1/_2$ inch (12.7 mm), shall be self-drilling tapping and shall conform to ASTM C 1513. Structural sheathing shall be attached to cold-formed steel studs with minimum No. 8 self-drilling tapping screws that conform to ASTM C 1513. Screws for attaching structural sheathing to cold-formed steel wall framing shall have a minimum head diameter of 0.292 inch (7.4 mm) with countersunk heads and shall be installed with a minimum edge distance of $^3/_8$ inch (9.5 mm). Gypsum board shall be attached to cold-formed steel wall framing with minimum No. 6 screws conforming to ASTM C 954 or ASTM C 1513 with a bugle-head style and shall be installed in accordance with Section R702. For connections, screws shall extend through the steel a minimum of three exposed threads. Fasteners shall have rust-inhibitive coating suitable for the installation in which they are being used, or be manufactured from material not susceptible to corrosion.

R603.2.6 Web holes, web hole reinforcing and web hole patching. Web holes, web hole reinforcing and web hole patching shall be in accordance with this section.

R603.2.6.1 Web holes. Web holes in wall studs and other structural members shall comply with all of the following conditions:

1. Holes shall conform to Figure R603.2.6.1.
2. Holes shall be permitted only along the centerline of the web of the framing member.
3. Holes shall have a center-to-center spacing of not less than 24 inches (610 mm).
4. Holes shall have a web hole width not greater than 0.5 times the member depth, or $1^1/_2$ inches (38 mm).
5. Holes shall have a web hole length not exceeding $4^1/_2$ inches (114 mm).
6. Holes shall have a minimum distance between the edge of the bearing surface and the edge of the web hole of not less than 10 inches (254 mm).

Framing members with web holes not conforming to the above requirements shall be reinforced in accordance with Section R603.2.6.2, patched in accordance with Section R603.2.6.3 or designed in accordance with accepted engineering practice.

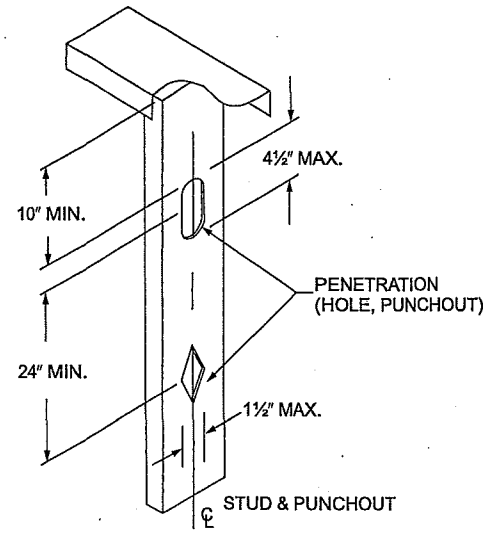

For SI: 1 inch = 25.4 mm.

FIGURE R603.2.6.1
WALL STUD WEB HOLES

R603.2.6.2 Web hole reinforcing. Web holes in gable endwall studs not conforming to the requirements of Section R603.2.6.1 shall be permitted to be reinforced if the hole is located fully within the center 40 percent of the span and the depth and length of the hole does not exceed 65 percent of the flat width of the web. The reinforcing shall be a steel plate or C-shape section with a hole that does not exceed the web hole size limitations of Section R603.2.6.1 for the member being reinforced. The steel reinforcing shall be the same thickness as the receiving member and shall extend not less than 1 inch (25 mm) beyond all edges of the hole. The steel reinforcing shall be fastened to the web of the receiving member with No. 8 screws spaced not more than 1 inch (25 mm) center-to-center along the edges of the patch with minimum edge distance of $^1/_2$ inch (12.7 mm).

R603.2.6.3 Hole patching. Web holes in wall studs and other structural members not conforming to the requirements in Section R603.2.6.1 shall be permitted to be patched in accordance with either of the following methods:

1. Framing members shall be replaced or designed in accordance with accepted engineering practice where web holes exceed the following size limits:
   1.1. The depth of the hole, measured across the web, exceeds 70 percent of the flat width of the web.

1.2. The length of the hole measured along the web exceeds 10 inches (254 mm) or the depth of the web, whichever is greater.

2. Web holes not exceeding the dimensional requirements in Section R603.2.6.3, Item 1, shall be patched with a solid steel plate, stud section or track section in accordance with Figure R603.2.6.3. The steel patch shall, as a minimum, be the same thickness as the receiving member and shall extend not less than1 inch (25 mm) beyond all edges of the hole. The steel patch shall be fastened to the web of the receiving member with No. 8 screws spaced not more than 1 inch (25 mm) center-to-center along the edges of the patch with a minimum edge distance of $^1/_2$ inch (12.7 mm).

R603.3 Wall construction. Exterior cold-formed steel framed walls and interior load-bearing cold-formed steel framed walls shall be constructed in accordance with the provisions of this section.

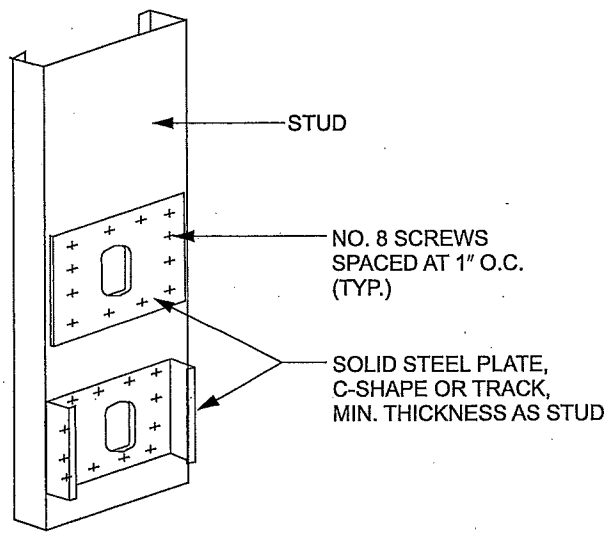

For SI: 1 inch = 25.4 mm.

FIGURE R603.2.6.3
WALL STUD WEB HOLE PATCH

R603.3.1 Wall to foundation or floor connection. Cold-formed steel framed walls shall be anchored to foundations or floors in accordance with Table R603.3.1 and Figure R603.3.1(1), R603.3.1(2), R603.3.1(3) or R603.3.1(4). Anchor bolts shall be located not more than 12 inches (305 mm) from corners or the termination of bottom tracks. Anchor bolts shall extend not less than 15 inches (381 mm) into masonry or 7 inches (178 mm) into concrete. Foundation anchor straps shall be permitted, in lieu of anchor bolts, if spaced as required to provide equivalent anchorage to the required anchor bolts and installed in accordance with manufacturer's requirements.

R603.3.1.1 Gable endwalls. Gable endwalls with heights greater than 10 feet (3048 mm) shall be anchored to foundations or floors in accordance with Table R603.3.1.1(1) or R603.3.1.1(2).

R603.3.2 Minimum stud sizes. Cold-formed steel walls shall be constructed in accordance with Figure R603.3.1(1), R603.3.1(2) or R603.3.1(3), as applicable. Exterior wall stud size and thickness shall be determined in accordance with the limits set forth in Tables R603.3.2(2) through R603.3.2(16). Interior load-bearing wall stud size and thickness shall be determined in accordance with the limits set forth in Tables R603.3.2(2) through R603.3.2(16) based upon an ultimate design wind speed of 115 miles per hour (51 m/s), Exposure Category B, and the building width, stud spacing and snow load, as appropriate. Fastening requirements shall be in accordance with Section R603.2.5 and Table R603.3.2(1). Top and bottom tracks shall have the same minimum thickness as the wall studs.

Exterior wall studs shall be permitted to be reduced to the next thinner size, as shown in Tables R603.3.2(2) through R603.3.2(16), but not less than 33 mils (0.84 mm), where both of the following conditions exist:

1. Minimum of $^1/_2$-inch (12.7 mm) gypsum board is installed and fastened on the interior surface in accordance with Section R702.
2. Wood structural sheathing panels of minimum $^7/_{16}$-inch-thick (11.1 mm) oriented strand board or $^{15}/_{32}$-inch-thick (12 mm) plywood are installed and fastened in accordance with Section R603.9.1 and Table R603.3.2(1) on the outside surface.

Interior load-bearing walls shall be permitted to be reduced to the next thinner size, as shown in Tables R603.3.2(2) through R603.3.2(16), but not less than 33 mils (0.84 mm), where not less than $^1/_2$-inch (12.7 mm) gypsum board is installed and fastened in accordance with Section R702 on both sides of the wall. The tabulated stud thickness for load-bearing walls shall be used when the attic load is 10 pounds per square foot (480 Pa) or less. A limited attic storage load of 20 pounds per square foot (960 Pa) shall be permitted provided that the next higher snow load column is used to select the stud size from Tables R603.3.2(2) through R603.3.2(16).

For two-story buildings, the tabulated stud thickness for walls supporting one floor, roof and ceiling shall be used when the second-floor live load is 30 pounds per square foot (1440 Pa). Second-floor live loads of 40 psf (1920 Pa) shall be permitted provided that the next higher snow load column is used to select the stud size from Tables R603.3.2(2) through R603.3.2(11).

For three-story buildings, the tabulated stud thickness for walls supporting one or two floors, roof and ceiling shall be used when the third-floor live load is 30 pounds per square foot (1440 Pa). Third-floor live loads of 40 pounds per square foot (1920 Pa) shall be permitted provided that the next higher snow load column is used to select the stud size from Tables R603.3.2(12) through R603.3.2(16).

TABLE R603.3.1
WALL TO FOUNDATION OR FLOOR CONNECTION REQUIREMENTS[a, b]

FRAMING CONDITION			ULTIMATE WIND SPEED AND EXPOSURE CATEGORY (mph)				
			115 B	126 B or 110 C	< 139 B or 115 C	126 C	< 139 C
Wall bottom track to floor per Figure R603.3.1(1)			1-No. 8 screw at 12″ o.c.	1-No. 8 screw at 12″ o.c.	1-No. 8 screw at 12″ o.c.	2-No. 8 screws at 12″ o.c.	2-No. 8 screws at 12″ o.c.
Wall bottom track to foundation per Figure R603.3.1(2)[d]			$^1/_2$″ minimum diameter anchor bolt at 6′ o.c.	$^1/_2$″ minimum diameter anchor bolt at 4′ o.c.	$^1/_2$″ minimum diameter anchor bolt at 4′ o.c.	$^1/_2$″ minimum diameter anchor bolt at 4′ o.c.	$^1/_2$″ minimum diameter anchor bolt at 4′ o.c.
Wall bottom track to wood sill per Figure R603.3.1(3)			Steel plate spaced at 4′ o.c., with 4-No. 8 screws and 4-10d or 6-8d common nails	Steel plate spaced at 3′ o.c., with 4-No. 8 screws and 4-10d or 6-8d common nails	Steel plate spaced at 3′ o.c., with 4-No. 8 screws and 4-10d or 6-8d common nails	Steel plate spaced at 2′ o.c., with 4-No. 8 screws and 4-10d or 6-8d common nails	Steel plate spaced at 2′ o.c., with 4-No. 8 screws and 4-10d or 6-8d common nails
Wind uplift connector strength (lbs)[c, e]	Stud Spacing (inches)	Roof Span (feet)					
	16	24	NR	NR	NR	124	209
		28	NR	NR	62	151	249
		32	NR	NR	79	179	289
		36	NR	NR	94	206	329
		40	NR	61	117	239	374
	24	24	NR	NR	69	186	314
		28	NR	NR	93	227	374
		32	NR	NR	117	268	434
		36	NR	64	141	309	494
		40	NR	92	176	359	562

For SI: 1 inch = 25.4 mm, 1 mile per hour = 0.447 m/s, 1 foot = 304.8 mm, 1 pound = 4.45 N.

a. Anchor bolts are to be located not more than 12 inches from corners or the termination of bottom tracks such as, at door openings or corners. Bolts are to extend not less than 15 inches into masonry or 7 inches into concrete.

b. All screw sizes shown are minimum.

c. NR = Uplift connector not required.

d. Foundation anchor straps are permitted in place of anchor bolts, if spaced as required to provide equivalent anchorage to the required anchor bolts and installed in accordance with manufacturer's requirements.

e. See Figure R603.3.1(4) for details.

TABLE R603.3.1.1(1)
GABLE ENDWALL TO FLOOR CONNECTION REQUIREMENTS[a, b, c]

ULTIMATE WIND SPEED (mph)		WALL BOTTOM TRACK TO FLOOR JOIST OR TRACK CONNECTION		
Exposure Category		Stud height, *h* (feet)		
B	C	$10 < h \leq 14$	$14 < h \leq 18$	$18 < h \leq 22$
115	—	1-No. 8 screw @ 12″ o.c.	1-No. 8 screw @ 12″ o.c.	1-No. 8 screw @ 12″ o.c.
126	110	1-No. 8 screw @ 12″ o.c.	1-No. 8 screw @ 12″ o.c.	1-No. 8 screw @ 12″ o.c.
< 139	115	1-No. 8 screw @ 12″ o.c.	1-No. 8 screw @ 12″ o.c.	2-No. 8 screws @ 12″ o.c.
—	126	1-No. 8 screw @ 12″ o.c.	2-No. 8 screws @ 12″ o.c.	1-No. 8 screw @ 8″ o.c.
—	< 139	2-No. 8 screws @ 12″ o.c.	1-No. 8 screw @ 8″ o.c.	2-No. 8 screws @ 8″ o.c.

For SI: 1 inch = 25.4 mm, 1 mile per hour = 0.447 m/s, 1 foot = 304.8 mm.

a. Refer to Table R603.3.1.1(2) for gable endwall bottom track to foundation connections.

b. Where attachment is not given, special design is required.

c. Stud height, *h*, is measured from wall bottom track to wall top track or brace connection height.

TABLE R603.3.1.1(2)
GABLE ENDWALL BOTTOM TRACK TO FOUNDATION CONNECTION REQUIREMENTS[a, b, c]

ULTIMATE WIND SPEED (mph)		MINIMUM SPACING FOR $^1/_2$-INCH-DIAMETER ANCHOR BOLTS[d]		
Exposure Category		Stud height, *h* (feet)		
B	C	$10 < h \leq 14$	$14 < h \leq 18$	$18 < h \leq 22$
115	—	6′- 0″ o.c.	5′- 7″ o.c.	6′- 0″ o.c.
126	110	5′- 10″ o.c.	6′- 0″ o.c.	6′- 0″ o.c.
< 139	115	4′- 10″ o.c.	5′- 6″ o.c.	6′- 0″ o.c.
—	126	4′- 1″ o.c.	6′- 0″ o.c.	6′- 0″ o.c.
—	< 139	5′- 1″ o.c.	6′- 0″ o.c.	5′- 2″ o.c.

For SI: 1 inch = 25.4 mm, 1 mile per hour = 0.447 m/s, 1 foot = 304.8 mm.

a. Refer to Table R603.3.1.1(1) for gable endwall bottom track to floor joist or track connection connections.

b. Where attachment is not given, special design is required.

c. Stud height, *h*, is measured from wall bottom track to wall top track or brace connection height.

d. Foundation anchor straps are permitted in place of anchor bolts if spaced as required to provide equivalent anchorage to the required anchor bolts and installed in accordance with manufacturer's requirements.

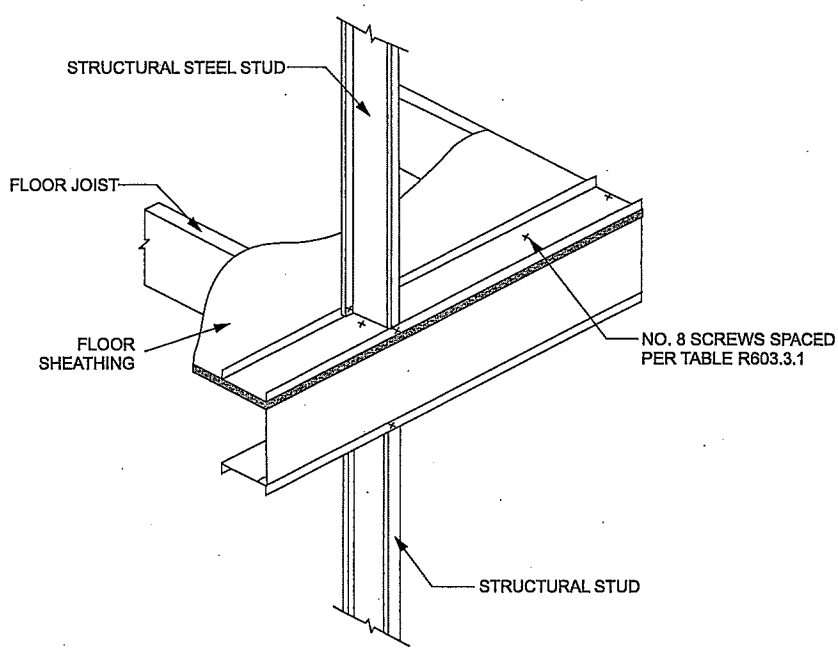

FIGURE R603.3.1(1)
WALL TO FLOOR CONNECTION

2674

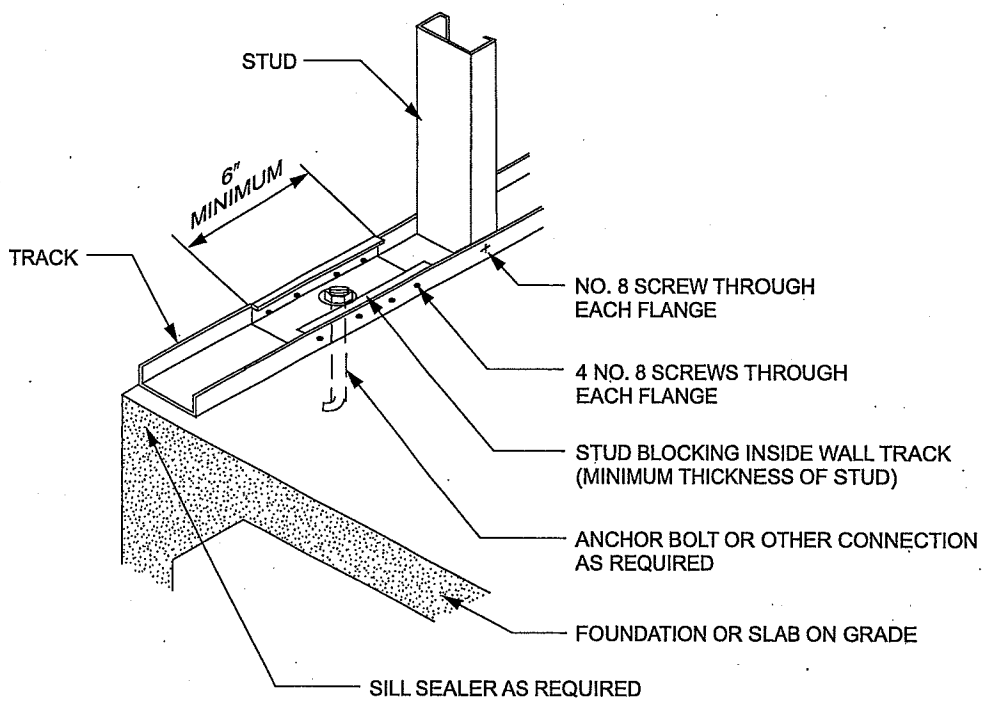

For SI: 1 inch = 25.4 mm.

FIGURE R603.3.1(2)
WALL TO FOUNDATION CONNECTION

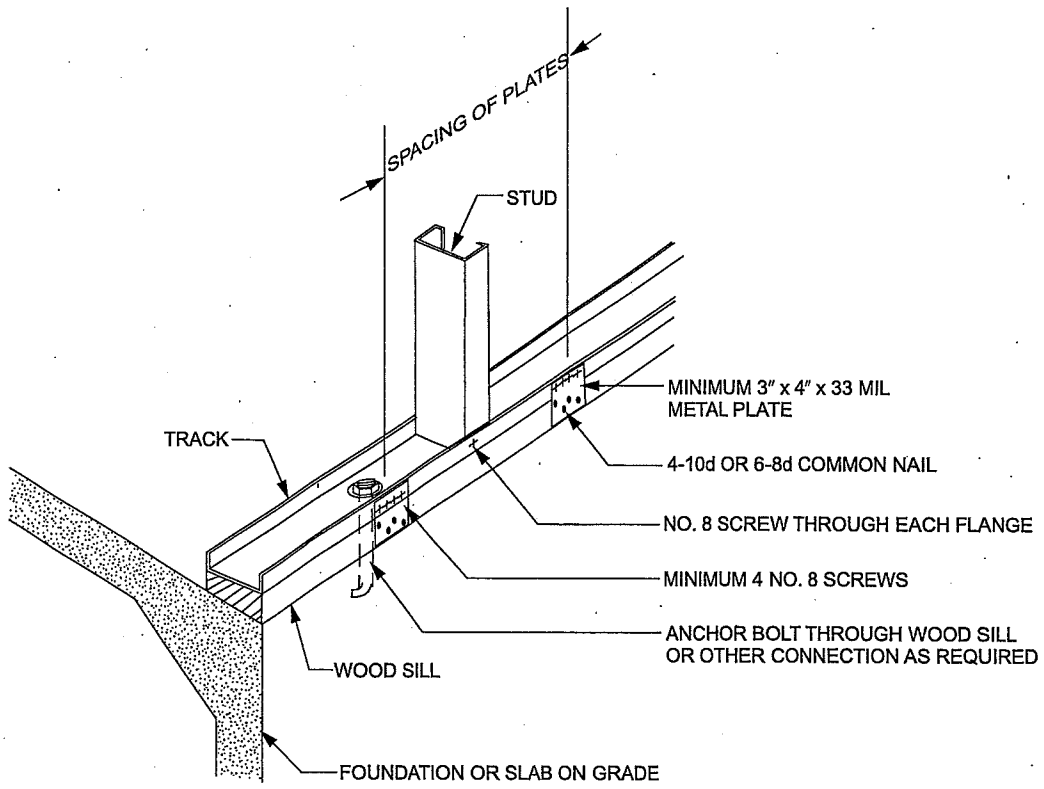

For SI: 1 mil = 0.0254 mm, 1 inch = 25.4 mm.

FIGURE R603.3.1(3)
WALL TO WOOD SILL CONNECTION

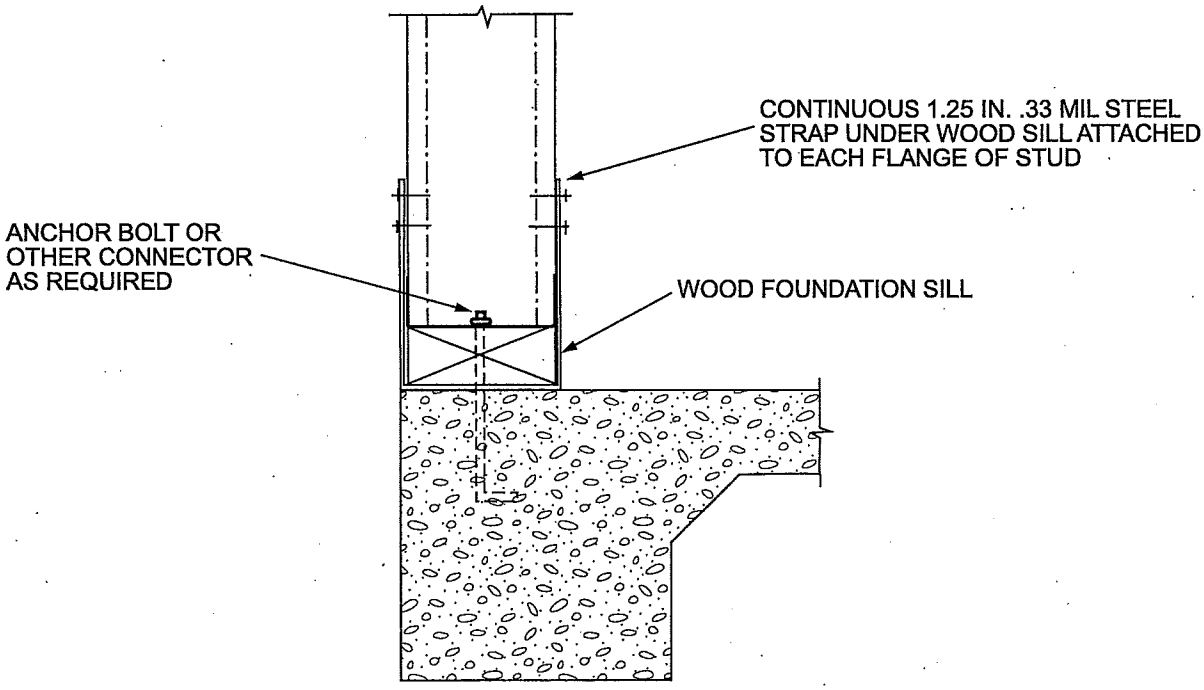

FIGURE R603.3.1(4)
WIND UPLIFT CONNECTOR

TABLE R603.3.2(1)
WALL FASTENING SCHEDULE[a]

DESCRIPTION OF BUILDING ELEMENT	NUMBER AND SIZE OF FASTENERS[a]	SPACING OF FASTENERS
Wall stud to top or bottom track	2-No. 8 screws	Each end of stud, one per flange
Structural sheathing to wall studs	No. 8 screws[b]	6″ o.c. on edges and 12″ o.c. at intermediate supports
$^1/_2$″ gypsum board to framing	No. 6 screws	12″ o.c.

For SI: 1 inch = 25.4 mm.

a. All screw sizes shown are minimum.

b. Screws for attachment of structural sheathing panels are to be bugle-head, flat-head, or similar head styles with a minimum head diameter of 0.29 inch.

TABLE R603.3.2(2)
24-FOOT-WIDE BUILDING SUPPORTING ROOF AND CEILING ONLY[a, b, c, d]

ULTIMATE WIND SPEED AND EXPOSURE CATEGORY (mph)		MEMBER SIZE	STUD SPACING (inches)	MINIMUM STUD THICKNESS (mils)											
				8-foot Studs				9-foot Studs				10-foot Studs			
				Ground Snow Load (psf)											
Exp. B	Exp. C			20	30	50	70	20	30	50	70	20	30	50	70
115	—	350S162	16	33	33	33	33	33	33	33	33	33	33	33	33
			24	33	33	33	43	33	33	33	43	33	33	43	43
		550S162	16	33	33	33	33	33	33	33	33	33	33	33	33
			24	33	33	33	33	33	33	33	33	33	33	33	33
126	110	350S162	16	33	33	33	33	33	33	33	33	33	33	33	33
			24	33	33	33	43	33	33	33	43	43	43	43	43
		550S162	16	33	33	33	33	33	33	33	33	33	33	33	33
			24	33	33	33	43	33	33	33	33	33	33	33	43
< 139	115	350S162	16	33	33	33	33	33	33	33	33	33	33	33	33
			24	33	33	33	43	43	43	43	43	43	43	43	54
		550S162	16	33	33	33	33	33	33	33	33	33	33	33	33
			24	33	33	33	43	33	33	33	33	43	43	43	43
—	126	350S162	16	33	33	33	33	33	33	33	33	43	43	43	43
			24	43	43	43	43	43	43	43	43	54	54	54	54
		550S162	16	33	33	33	33	33	33	33	33	33	33	33	33
			24	33	33	33	43	43	43	43	43	43	43	43	43
—	< 139	350S162	16	33	33	33	33	43	43	43	43	43	43	43	43
			24	43	43	43	43	54	54	54	54	54	54	54	54
		550S162	16	33	33	33	33	33	33	33	33	33	33	33	33
			24	33	43	43	43	43	43	43	43	43	43	43	43

For SI: 1 inch = 25.4 mm, 1 foot = 304.8 mm, 1 mil = 0.0254 mm, 1 mile per hour = 0.447 m/s, 1 pound per square foot = 0.0479 kPa, 1 ksi = 1,000 psi = 6.895 MPa.

a. Deflection criterion: *L*/240.

b. Design load assumptions:

Second-floor dead load is 10 psf.

Second-floor live load is 30 psf.

Roof/ceiling dead load is 12 psf.

Attic live load is 10 psf.

c. Building width is in the direction of horizontal framing members supported by the wall studs.

d. Minimum Grade 33 ksi steel shall be used for 33 mil and 43 mil thicknesses. Minimum Grade 50 ksi steel shall be used for 54 and 68 mil thicknesses.

TABLE R603.3.2(3)
28-FOOT-WIDE BUILDING SUPPORTING ROOF AND CEILING ONLY[a, b, c, d]

ULTIMATE WIND SPEED AND EXPOSURE CATEGORY (mph)		MEMBER SIZE	STUD SPACING (inches)	MINIMUM STUD THICKNESS (mils)											
				8-foot Studs				9-foot Studs				10-foot Studs			
				Ground Snow Load (psf)											
Exp. B	Exp. C			20	30	50	70	20	30	50	70	20	30	50	70
115	—	350S162	16	33	33	33	33	33	33	33	33	33	33	33	33
			24	33	33	43	43	33	33	43	43	33	33	43	54
		550S162	16	33	33	33	33	33	33	33	33	33	33	33	33
			24	33	33	33	43	33	33	33	43	33	33	33	43
126	110	350S162	16	33	33	33	33	33	33	33	33	33	33	33	33
			24	33	33	43	43	33	33	43	43	43	43	43	54
		550S162	16	33	33	33	33	33	33	33	33	33	33	33	33
			24	33	33	33	43	33	33	33	43	33	33	33	43
< 139	115	350S162	16	33	33	33	33	33	33	33	33	33	33	33	43
			24	33	33	43	43	43	43	43	43	43	43	43	54
		550S162	16	33	33	33	33	33	33	33	33	33	33	33	33
			24	33	33	33	43	33	33	33	43	43	43	43	43
—	126	350S162	16	33	33	33	33	33	33	33	33	43	43	43	43
			24	43	43	43	54	43	43	43	54	54	54	54	54
		550S162	16	33	33	33	33	33	33	33	33	33	33	33	33
			24	33	33	33	43	43	43	43	43	43	43	43	43
—	< 139	350S162	16	33	33	33	33	43	43	43	43	43	43	43	43
			24	43	43	43	54	54	54	54	54	54	54	54	54
		550S162	16	33	33	33	33	33	33	33	33	33	33	33	33
			24	43	43	43	43	43	43	43	43	43	43	43	43

For SI: 1 inch = 25.4 mm, 1 foot = 304.8 mm, 1 mil = 0.0254 mm, 1 mile per hour = 0.447 m/s, 1 pound per square foot = 0.0479 kPa, 1 ksi = 1,000 psi = 6.895 MPa.

a. Deflection criterion: *L*/240.

b. Design load assumptions:
Second-floor dead load is 10 psf.
Second-floor live load is 30 psf.
Roof/ceiling dead load is 12 psf.
Attic live load is 10 psf.

c. Building width is in the direction of horizontal framing members supported by the wall studs.

d. Minimum Grade 33 ksi steel shall be used for 33 mil and 43 mil thicknesses. Minimum Grade 50 ksi steel shall be used for 54 and 68 mil thicknesses.

TABLE R603.3.2(4)
32-FOOT-WIDE BUILDING SUPPORTING ROOF AND CEILING ONLY[a, b, c, d]

ULTIMATE WIND SPEED AND EXPOSURE CATEGORY (mph)		MEMBER SIZE	STUD SPACING (inches)	MINIMUM STUD THICKNESS (mils)											
				8-foot Studs				9-foot Studs				10-foot Studs			
				Ground Snow Load (psf)											
Exp. B	Exp. C			20	30	50	70	20	30	50	70	20	30	50	70
115	—	350S162	16	33	33	33	33	33	33	33	33	33	33	33	43
			24	33	33	43	54	33	33	43	43	33	33	43	54
		550S162	16	33	33	33	33	33	33	33	33	33	33	33	33
			24	33	33	33	43	33	33	33	43	33	33	33	43
126	110	350S162	16	33	33	33	33	33	33	33	33	33	33	33	43
			24	33	33	43	54	33	33	43	54	43	43	43	54
		550S162	16	33	33	33	33	33	33	33	33	33	33	33	33
			24	33	33	33	43	33	33	33	43	33	33	33	43
< 139	115	350S162	16	33	33	33	43	33	33	33	33	33	33	33	43
			24	33	33	43	54	43	43	43	54	43	43	43	54
		550S162	16	33	33	33	33	33	33	33	33	33	33	33	33
			24	33	33	33	43	33	33	33	43	43	43	43	43
—	126	350S162	16	33	33	33	43	33	33	33	43	43	43	43	43
			24	43	43	43	54	43	43	43	54	54	54	54	54
		550S162	16	33	33	33	33	33	33	33	33	33	33	33	33
			24	33	33	43	43	43	43	43	43	43	43	43	43
—	< 139	350S162	16	33	33	33	43	43	43	43	43	43	43	43	43
			24	43	43	43	54	54	54	54	54	54	54	54	54
		550S162	16	33	33	33	33	33	33	33	33	33	33	33	33
			24	43	43	43	43	43	43	43	43	43	43	43	43

For SI: 1 inch = 25.4 mm, 1 foot = 304.8 mm, 1 mil = 0.0254 mm, 1 mile per hour = 0.447 m/s, 1 pound per square foot = 0.0479 kPa, 1 ksi = 1,000 psi = 6.895 MPa.

a. Deflection criterion: *L*/240.

b. Design load assumptions:
Second-floor dead load is 10 psf.
Second-floor live load is 30 psf.
Roof/ceiling dead load is 12 psf.
Attic live load is 10 psf.

c. Building width is in the direction of horizontal framing members supported by the wall studs.

d. Minimum Grade 33 ksi steel shall be used for 33 mil and 43 mil thicknesses. Minimum Grade 50 ksi steel shall be used for 54 and 68 mil thicknesses.

TABLE R603.3.2(5)
36-FOOT-WIDE BUILDING SUPPORTING ROOF AND CEILING ONLY[a, b, c, d]

ULTIMATE WIND SPEED AND EXPOSURE CATEGORY (mph)		MEMBER SIZE	STUD SPACING (inches)	MINIMUM STUD THICKNESS (mils)											
				8-foot Studs				9-foot Studs				10-foot Studs			
				Ground Snow Load (psf)											
Exp. B	Exp. C			20	30	50	70	20	30	50	70	20	30	50	70
115	—	350S162	16	33	33	33	43	33	33	33	43	33	33	33	43
			24	33	33	43	54	33	33	43	54	33	43	43	54
		550S162	16	33	33	33	33	33	33	33	33	33	33	33	33
			24	33	33	43	43	33	33	43	43	33	33	43	43
126	110	350S162	16	33	33	33	43	33	33	33	43	33	33	33	43
			24	33	33	43	54	33	33	43	54	43	43	54	54
		550S162	16	33	33	33	33	33	33	33	33	33	33	33	33
			24	33	33	43	43	33	33	43	43	33	33	43	43
< 139	115	350S162	16	33	33	33	43	33	33	33	33	33	33	33	43
			24	33	33	43	54	43	43	43	43	43	43	54	54
		550S162	16	33	33	33	33	33	33	33	33	33	33	33	33
			24	33	33	43	43	33	33	43	43	43	43	43	43
—	126	350S162	16	33	33	33	43	33	33	33	43	43	43	43	43
			24	43	43	43	54	43	43	43	54	54	54	54	54
		550S162	16	33	33	33	33	33	33	33	33	33	33	33	33
			24	33	33	43	43	43	43	43	43	43	43	43	43
—	< 139	350S162	16	33	33	33	43	43	43	43	43	43	43	43	43
			24	43	43	54	54	54	54	54	54	54	54	54	54
		550S162	16	33	33	33	33	33	33	33	33	33	33	33	33
			24	43	43	43	54	43	33	43	43	43	43	43	54

For SI: 1 inch = 25.4 mm, 1 foot = 304.8 mm, 1 mil = 0.0254 mm, 1 mile per hour = 0.447 m/s, 1 pound per square foot = 0.0479 kPa, 1 ksi = 1,000 psi = 6.895 MPa.

a. Deflection criterion: *L*/240.

b. Design load assumptions:
Second-floor dead load is 10 psf.
Second-floor live load is 30 psf.
Roof/ceiling dead load is 12 psf.
Attic live load is 10 psf.

c. Building width is in the direction of horizontal framing members supported by the wall studs.

d. Minimum Grade 33 ksi steel shall be used for 33 mil and 43 mil thicknesses. Minimum Grade 50 ksi steel shall be used for 54 and 68 mil thicknesses.

TABLE R603.3.2(6)
40-FOOT-WIDE BUILDING SUPPORTING ROOF AND CEILING ONLY[a, b, c, d]

ULTIMATE WIND SPEED AND EXPOSURE CATEGORY (mph)		MEMBER SIZE	STUD SPACING (inches)	MINIMUM STUD THICKNESS (mils)											
				8-foot Studs				9-foot Studs				10-foot Studs			
				Ground Snow Load (psf)											
Exp. B	Exp. C			20	30	50	70	20	30	50	70	20	30	50	70
115	—	350S162	16	33	33	33	43	33	33	33	43	33	33	33	43
			24	33	33	43	54	33	33	43	54	43	43	54	54
		550S162	16	33	33	33	33	33	33	33	33	33	33	33	33
			24	33	33	43	54	33	33	43	43	33	33	43	54
126	110	350S162	16	33	33	33	43	33	33	33	43	33	33	43	43
			24	33	43	43	54	33	43	43	54	43	43	54	54
		550S162	16	33	33	33	43	33	33	33	33	33	33	33	33
			24	33	33	43	54	33	33	43	43	33	33	43	54
< 139	115	350S162	16	33	33	33	43	33	33	33	43	33	33	43	43
			24	33	43	43	54	43	43	43	54	43	43	54	54
		550S162	16	33	33	33	43	33	33	33	33	33	33	33	43
			24	33	33	43	54	33	33	43	43	43	43	43	54
—	126	350S162	16	33	33	33	43	33	33	33	43	43	43	43	43
			24	43	43	54	54	43	43	54	54	54	54	54	54
		550S162	16	33	33	33	43	33	33	33	33	33	33	33	43
			24	33	33	43	54	43	43	43	54	43	43	43	54
—	< 139	350S162	16	33	33	43	43	43	43	43	43	43	43	43	54
			24	43	43	54	54	54	54	54	54	54	54	54	68
		550S162	16	33	33	33	43	33	33	33	43	33	33	33	43
			24	43	43	43	54	43	43	43	54	43	43	43	54

For SI: 1 inch = 25.4 mm, 1 foot = 304.8 mm, 1 mil = 0.0254 mm, 1 mile per hour = 0.447 m/s, 1 pound per square foot = 0.0479 kPa, 1 ksi = 1,000 psi = 6.895 MPa.

a. Deflection criterion: *L*/240.

b. Design load assumptions:
Second-floor dead load is 10 psf.
Second-floor live load is 30 psf.
Roof/ceiling dead load is 12 psf.
Attic live load is 10 psf.

c. Building width is in the direction of horizontal framing members supported by the wall studs.

d. Minimum Grade 33 ksi steel shall be used for 33 mil and 43 mil thicknesses. Minimum Grade 50 ksi steel shall be used for 54 and 68 mil thicknesses.

TABLE R603.3.2(7)
24-FOOT-WIDE BUILDING SUPPORTING ONE FLOOR, ROOF AND CEILING[a, b, c, d]

ULTIMATE WIND SPEED AND EXPOSURE CATEGORY (mph)		MEMBER SIZE	STUD SPACING (Inches)	MINIMUM STUD THICKNESS (mils)											
				8-foot Studs				9-foot Studs				10-foot Studs			
				Ground Snow Load (psf)											
Exp. B	Exp. C			20	30	50	70	20	30	50	70	20	30	50	70
115	—	350S162	16	33	33	33	33	33	33	33	33	33	33	33	43
			24	33	33	43	43	33	43	43	43	43	43	43	54
		550S162	16	33	33	33	33	33	33	33	33	33	33	33	33
			24	33	33	33	43	33	33	33	43	33	33	33	43
126	110	350S162	16	33	33	33	33	33	33	33	33	33	33	33	43
			24	33	43	43	43	43	43	43	43	43	43	43	54
		550S162	16	33	33	33	33	33	33	33	33	33	33	33	33
			24	33	33	33	43	33	33	33	43	33	33	33	43
< 139	115	350S162	16	33	33	33	43	33	33	33	33	33	33	43	43
			24	43	43	43	43	43	43	43	43	54	54	54	54
		550S162	16	33	33	33	33	33	33	33	33	33	33	33	33
			24	33	33	33	43	33	33	33	43	43	43	43	43
—	126	350S162	16	33	33	33	43	33	33	33	43	43	43	43	43
			24	43	43	43	54	43	43	54	54	54	54	54	54
		550S162	16	33	33	33	33	33	33	33	33	33	33	33	33
			24	33	33	33	43	43	43	43	43	43	43	43	43
—	< 139	350S162	16	33	33	33	43	43	43	43	43	43	43	43	43
			24	43	43	43	54	54	54	54	54	54	54	54	54
		550S162	16	33	33	33	33	33	33	33	33	33	33	33	33
			24	43	43	43	43	43	43	43	43	43	43	43	43

For SI: 1 inch = 25.4 mm, 1 foot = 304.8 mm, 1 mil = 0.0254 mm, 1 mile per hour = 0.447 m/s, 1 pound per square foot = 0.0479 kPa, 1 ksi = 1,000 psi = 6.895 MPa.

a. Deflection criterion: *L*/240.

b. Design load assumptions:
Second-floor dead load is 10 psf.
Second-floor live load is 30 psf.
Roof/ceiling dead load is 12 psf.
Attic live load is 10 psf.

c. Building width is in the direction of horizontal framing members supported by the wall studs.

d. Minimum Grade 33 ksi steel shall be used for 33 mil and 43 mil thicknesses. Minimum Grade 50 ksi steel shall be used for 54 and 68 mil thicknesses.

TABLE R603.3.2(8)
28-FOOT-WIDE BUILDING SUPPORTING ONE FLOOR, ROOF AND CEILING[a, b, c, d]

ULTIMATE WIND SPEED AND EXPOSURE CATEGORY (mph)		MEMBER SIZE	STUD SPACING (inches)	MINIMUM STUD THICKNESS (mils)											
				8-foot Studs				9-foot Studs				10-foot Studs			
				Ground Snow Load (psf)											
Exp. B	Exp. C			20	30	50	70	20	30	50	70	20	30	50	70
115	—	350S162	16	33	33	33	43	33	33	33	43	33	33	33	43
			24	43	43	43	54	43	43	43	54	43	43	43	54
		550S162	16	33	33	33	33	33	33	33	33	33	33	33	33
			24	33	33	43	43	33	33	43	43	33	33	43	43
126	110	350S162	16	33	33	33	43	33	33	33	43	33	33	43	43
			24	43	43	43	54	43	43	43	54	43	43	54	54
		550S162	16	33	33	33	33	33	33	33	33	33	33	33	33
			24	33	33	43	43	33	33	43	43	33	33	43	43
< 139	115	350S162	16	33	33	33	43	33	33	33	43	43	43	43	43
			24	43	43	43	54	43	43	43	54	54	54	54	54
		550S162	16	33	33	33	33	33	33	33	33	33	33	33	33
			24	33	33	43	43	33	33	43	43	43	43	43	43
—	126	350S162	16	33	33	33	43	33	33	43	43	43	43	43	43
			24	43	43	43	54	54	54	54	54	54	54	54	54
		550S162	16	33	33	33	33	33	33	33	33	33	33	33	33
			24	33	33	43	43	43	43	43	43	43	43	43	43
—	< 139	350S162	16	33	33	43	43	43	43	43	43	43	43	43	54
			24	43	43	54	54	54	54	54	54	54	54	54	54
		550S162	16	33	33	33	33	33	33	33	33	33	33	33	33
			24	43	43	43	43	43	43	43	43	43	43	43	43

For SI: 1 inch = 25.4 mm, 1 foot = 304.8 mm, 1 mil = 0.0254 mm, 1 mile per hour = 0.447 m/s, 1 pound per square foot = 0.0479 kPa, 1 ksi = 1,000 psi = 6.895 MPa.

a. Deflection criterion: *L*/240.

b. Design load assumptions:
Second-floor dead load is 10 psf.
Second-floor live load is 30 psf.
Roof/ceiling dead load is 12 psf.
Attic live load is 10 psf.

c. Building width is in the direction of horizontal framing members supported by the wall studs.

d. Minimum Grade 33 ksi steel shall be used for 33 mil and 43 mil thicknesses. Minimum Grade 50 ksi steel shall be used for 54 and 68 mil thicknesses.

TABLE R603.3.2(9)
32-FOOT-WIDE BUILDING SUPPORTING ONE FLOOR, ROOF AND CEILING[a, b, c, d]

ULTIMATE WIND SPEED AND EXPOSURE CATEGORY (mph)		MEMBER SIZE	STUD SPACING (inches)	MINIMUM STUD THICKNESS (mils)											
				8-foot Studs				9-foot Studs				10-foot Studs			
				Ground Snow Load (psf)											
Exp. B	Exp. C			20	30	50	70	20	30	50	70	20	30	50	70
115	—	350S162	16	33	33	33	43	33	33	33	43	33	33	43	43
			24	43	43	43	54	43	43	43	54	43	43	54	54
		550S162	16	33	33	33	43	33	33	33	33	33	33	33	43
			24	33	43	43	54	33	33	43	43	33	33	43	43
126	110	350S162	16	33	33	33	43	33	33	33	43	33	43	43	43
			24	43	43	43	54	43	43	43	54	54	54	54	54
		550S162	16	33	33	33	43	33	33	33	33	33	33	33	43
			24	33	43	43	54	33	33	43	43	33	33	43	43
< 139	115	350S162	16	33	33	43	43	33	33	33	43	43	43	43	43
			24	43	43	54	54	43	43	54	54	54	54	54	54
		550S162	16	33	33	33	43	33	33	33	33	33	33	33	43
			24	33	43	43	54	33	33	43	43	43	43	43	54
—	126	350S162	16	33	33	43	43	43	43	43	43	43	43	43	43
			24	43	43	54	54	54	54	54	54	54	54	54	54
		550S162	16	33	33	33	43	33	33	33	33	33	33	33	43
			24	33	43	43	54	43	43	43	43	43	43	43	54
—	< 139	350S162	16	43	43	43	43	43	43	43	43	43	43	54	54
			24	54	54	54	54	54	54	54	54	54	54	54	54
		550S162	16	33	33	33	43	33	33	33	43	33	33	33	43
			24	43	43	43	54	43	43	43	43	43	43	43	54

For SI: 1 inch = 25.4 mm, 1 foot = 304.8 mm, 1 mil = 0.0254 mm, 1 mile per hour = 0.447 m/s, 1 pound per square foot = 0.0479 kPa, 1 ksi = 1,000 psi = 6.895 MPa.

a. Deflection criterion: *L*/240.

b. Design load assumptions:
Second-floor dead load is 10 psf.
Second-floor live load is 30 psf.
Roof/ceiling dead load is 12 psf.
Attic live load is 10 psf.

c. Building width is in the direction of horizontal framing members supported by the wall studs.

d. Minimum Grade 33 ksi steel shall be used for 33 mil and 43 mil thicknesses. Minimum Grade 50 ksi steel shall be used for 54 and 68 mil thicknesses.

TABLE R603.3.2(10)
36-FOOT-WIDE BUILDING SUPPORTING ONE FLOOR, ROOF AND CEILING[a, b, c, d]

ULTIMATE WIND SPEED AND EXPOSURE CATEGORY (mph)		MEMBER SIZE	STUD SPACING (inches)	MINIMUM STUD THICKNESS (mils)											
				8-foot Studs				9-foot Studs				10-foot Studs			
				Ground Snow Load (psf)											
Exp. B	Exp. C			20	30	50	70	20	30	50	70	20	30	50	70
115	—	350S162	16	33	33	43	43	33	33	43	43	33	33	43	43
			24	43	43	54	54	43	43	54	54	54	54	54	54
		550S162	16	33	33	33	43	33	33	33	43	33	33	33	43
			24	43	43	43	54	43	43	43	54	43	43	43	54
126	110	350S162	16	33	33	43	43	33	33	43	43	43	43	43	43
			24	43	43	54	54	43	43	54	54	54	54	54	54
		550S162	16	33	33	33	43	33	33	33	43	33	33	33	43
			24	43	43	43	54	43	43	43	54	43	43	43	54
< 139	115	350S162	16	33	33	43	43	33	33	43	43	43	43	43	54
			24	43	43	54	54	54	54	54	54	54	54	54	54
		550S162	16	33	33	33	43	33	33	33	43	33	33	33	43
			24	43	43	43	54	43	43	43	54	43	43	43	54
—	126	350S162	16	33	33	43	43	43	43	43	43	43	43	43	54
			24	54	54	54	54	54	54	54	54	54	54	54	68
		550S162	16	33	33	33	43	33	33	33	43	33	33	33	43
			24	43	43	43	54	43	43	43	54	43	43	43	54
—	< 139	350S162	16	43	43	43	43	43	43	43	43	43	54	54	54
			24	54	54	54	54	54	54	54	54	54	54	54	68
		550S162	16	33	33	33	43	33	33	33	43	33	33	33	43
			24	43	43	43	54	43	43	43	54	43	43	43	54

For SI: 1 inch = 25.4 mm, 1 foot = 304.8 mm, 1 mil = 0.0254 mm, 1 mile per hour = 0.447 m/s, 1 pound per square foot = 0.0479 kPa, 1 ksi = 1,000 psi = 6.895 MPa.

a. Deflection criterion: *L*/240.

b. Design load assumptions:

Second-floor dead load is 10 psf.

Second-floor live load is 30 psf.

Roof/ceiling dead load is 12 psf.

Attic live load is 10 psf.

c. Building width is in the direction of horizontal framing members supported by the wall studs.

d. Minimum Grade 33 ksi steel shall be used for 33 mil and 43 mil thicknesses. Minimum Grade 50 ksi steel shall be used for 54 and 68 mil thicknesses.

TABLE R603.3.2(11)
40-FOOT-WIDE BUILDING SUPPORTING ONE FLOOR, ROOF AND CEILING[a, b, c, d]

ULTIMATE WIND SPEED AND EXPOSURE CATEGORY (mph)		MEMBER SIZE	STUD SPACING (inches)	MINIMUM STUD THICKNESS (mils)											
				8-foot Studs				9-foot Studs				10-foot Studs			
				Ground Snow Load (psf)											
Exp. B	Exp. C			20	30	50	70	20	30	50	70	20	30	50	70
115	—	350S162	16	33	33	43	43	33	33	43	43	43	43	43	54
			24	43	43	54	54	43	43	54	54	54	54	54	54
		550S162	16	33	33	33	43	33	33	33	43	33	33	33	43
			24	43	43	54	54	43	43	43	54	43	43	43	54
126	110	350S162	16	33	33	43	43	33	33	43	43	43	43	43	54
			24	43	43	54	54	43	43	54	54	54	54	54	54
		550S162	16	33	33	33	43	33	33	33	43	33	33	33	43
			24	43	43	54	54	43	43	43	54	43	43	43	54
< 139	115	350S162	16	33	33	43	43	43	43	43	43	43	43	43	54
			24	43	43	54	54	54	54	54	54	54	54	54	68
		550S162	16	33	33	43	43	33	33	33	43	33	33	33	43
			24	43	43	54	54	43	43	43	54	43	43	43	54
—	126	350S162	16	43	43	43	54	43	43	43	54	43	43	54	54
			24	54	54	54	54	54	54	54	54	54	54	54	68
		550S162	16	33	33	43	43	33	33	33	43	33	33	43	43
			24	43	43	54	54	43	43	43	54	43	43	54	54
—	< 139	350S162	16	43	43	43	54	43	43	43	54	54	54	54	54
			24	54	54	54	68	54	54	54	54	54	54	54	68
		550S162	16	33	33	43	43	33	33	33	43	33	33	43	43
			24	43	43	54	54	43	43	43	54	43	43	54	54

For SI: 1 inch = 25.4 mm, 1 foot = 304.8 mm, 1 mil = 0.0254 mm, 1 mile per hour = 0.447 m/s, 1 pound per square foot = 0.0479 kPa, 1 ksi = 1,000 psi = 6.895 MPa.

a. Deflection criterion: $L/240$.

b. Design load assumptions:
Second-floor dead load is 10 psf.
Second-floor live load is 30 psf.
Roof/ceiling dead load is 12 psf.
Attic live load is 10 psf.

c. Building width is in the direction of horizontal framing members supported by the wall studs.

d. Minimum Grade 33 ksi steel shall be used for 33 mil and 43 mil thicknesses. Minimum Grade 50 ksi steel shall be used for 54 and 68 mil thicknesses.

TABLE R603.3.2(12)
24-FOOT-WIDE BUILDING SUPPORTING TWO FLOORS, ROOF AND CEILING[a, b, c, d]

ULTIMATE WIND SPEED AND EXPOSURE CATEGORY (mph)		MEMBER SIZE	STUD SPACING (inches)	MINIMUM STUD THICKNESS (mils)											
				8-foot Studs				9-foot Studs				10-foot Studs			
				Ground Snow Load (psf)											
Exp. B	Exp. C			20	30	50	70	20	30	50	70	20	30	50	70
115	—	350S162	16	43	43	43	43	33	33	33	43	43	43	43	43
			24	54	54	54	54	43	43	54	54	54	54	54	54
		550S162	16	33	33	43	43	33	33	33	33	33	33	33	43
			24	43	43	54	54	43	43	43	43	43	43	43	54
126	110	350S162	16	43	43	43	43	33	33	33	43	43	43	43	43
			24	54	54	54	54	54	54	54	54	54	54	54	54
		550S162	16	33	33	43	43	33	33	33	33	33	33	33	43
			24	43	43	54	54	43	43	43	43	43	43	43	54
< 139	115	350S162	16	43	43	43	43	43	43	43	43	43	43	43	43
			24	54	54	54	54	54	54	54	54	54	54	54	54
		550S162	16	33	33	43	43	33	33	33	33	33	33	33	43
			24	43	43	54	54	43	43	43	43	43	43	43	54
—	126	350S162	16	43	43	43	43	43	43	43	43	43	43	43	54
			24	54	54	54	54	54	54	54	54	54	54	54	54
		550S162	16	33	33	43	43	33	33	33	33	33	33	33	43
			24	43	43	54	54	43	43	43	43	43	43	43	54
—	< 139	350S162	16	43	43	43	43	43	43	43	43	54	54	54	54
			24	54	54	54	54	54	54	54	54	54	54	54	68
		550S162	16	33	33	43	43	33	33	33	33	33	33	33	43
			24	43	43	54	54	43	43	43	43	43	43	43	54

For SI: 1 inch = 25.4 mm, 1 foot = 304.8 mm, 1 mil = 0.0254 mm, 1 mile per hour = 0.447 m/s, 1 pound per square foot = 0.0479 kPa, 1 ksi = 1,000 psi = 6.895 MPa.

a. Deflection criterion: *L*/240.

b. Design load assumptions:
- Top- and middle-floor dead load is 10 psf.
- Top-floor live load is 30 psf.
- Middle-floor live load is 40 psf.
- Roof/ceiling dead load is 12 psf.
- Attic live load is 10 psf.

c. Building width is in the direction of horizontal framing members supported by the wall studs.

d. Minimum Grade 33 ksi steel shall be used for 33 mil and 43 mil thicknesses. Minimum Grade 50 ksi steel shall be used for 54 and 68 mil thicknesses.

TABLE R603.3.2(13)
28-FOOT-WIDE BUILDING SUPPORTING TWO FLOORS, ROOF AND CEILING[a, b, c, d]

ULTIMATE WIND SPEED AND EXPOSURE CATEGORY (mph)		MEMBER SIZE	STUD SPACING (inches)	MINIMUM STUD THICKNESS (mils)											
				8-foot Studs				9-foot Studs				10-foot Studs			
				Ground Snow Load (psf)											
Exp. B	Exp. C			20	30	50	70	20	30	50	70	20	30	50	70
115	—	350S162	16	43	43	43	43	43	43	43	43	43	43	43	43
			24	54	54	54	54	54	54	54	54	54	54	54	54
		550S162	16	43	43	43	43	43	43	43	43	43	43	43	43
			24	54	54	54	54	54	54	54	54	54	54	54	54
126	110	350S162	16	43	43	43	43	43	43	43	43	43	43	43	43
			24	54	54	54	54	54	54	54	54	54	54	54	54
		550S162	16	43	43	43	43	43	43	43	43	43	43	43	43
			24	54	54	54	54	54	54	54	54	54	54	54	54
< 139	115	350S162	16	43	43	43	43	43	43	43	43	43	43	43	43
			24	54	54	54	54	54	54	54	54	54	54	54	54
		550S162	16	43	43	43	43	43	43	43	43	43	43	43	43
			24	54	54	54	54	54	54	54	54	54	54	54	54
—	126	350S162	16	43	43	43	43	43	43	43	43	43	43	54	54
			24	54	54	54	54	54	54	54	54	54	54	54	68
		550S162	16	43	43	43	43	43	43	43	43	43	43	43	43
			24	54	54	54	54	54	54	54	54	54	54	54	54
—	< 139	350S162	16	43	43	43	43	43	43	43	43	54	54	54	54
			24	54	54	54	54	54	54	54	54	68	68	68	68
		550S162	16	43	43	43	43	43	43	43	43	43	43	43	43
			24	54	54	54	54	54	54	54	54	54	54	54	54

For SI: 1 inch = 25.4 mm, 1 foot = 304.8 mm, 1 mil = 0.0254 mm, 1 mile per hour = 0.447 m/s, 1 pound per square foot = 0.0479 kPa, 1 ksi = 1,000 psi = 6.895 MPa.

a. Deflection criterion: $L/240$.

b. Design load assumptions:

Top- and middle-floor dead load is 10 psf.
Top-floor live load is 30 psf.
Middle-floor live load is 40 psf.
Roof/ceiling dead load is 12 psf.
Attic live load is 10 psf.

c. Building width is in the direction of horizontal framing members supported by the wall studs.

d. Minimum Grade 33 ksi steel shall be used for 33 mil and 43 mil thicknesses. Minimum Grade 50 ksi steel shall be used for 54 and 68 mil thicknesses.

TABLE R603.3.2(14)
32-FOOT-WIDE BUILDING SUPPORTING TWO FLOORS, ROOF AND CEILING[a, b, c, d]

ULTIMATE WIND SPEED AND EXPOSURE CATEGORY (mph)		MEMBER SIZE	STUD SPACING (inches)	MINIMUM STUD THICKNESS (mils)											
				8-foot Studs				9-foot Studs				10-foot Studs			
				Ground Snow Load (psf)											
Exp. B	Exp. C			20	30	50	70	20	30	50	70	20	30	50	70
115	—	350S162	16	43	43	43	54	43	43	43	43	43	43	43	54
			24	54	54	54	68	54	54	54	54	54	54	54	68
		550S162	16	43	43	43	43	43	43	43	43	43	43	43	43
			24	54	54	54	54	54	54	54	54	54	54	54	54
126	110	350S162	16	43	43	43	54	43	43	43	43	43	43	43	54
			24	54	54	54	68	54	54	54	54	54	54	54	68
		550S162	16	43	43	43	43	43	43	43	43	43	43	43	43
			24	54	54	54	54	54	54	54	54	54	54	54	54
< 139	115	350S162	16	43	43	43	54	43	43	43	43	43	43	54	54
			24	54	54	54	68	54	54	54	54	54	54	54	68
		550S162	16	43	43	43	43	43	43	43	43	43	43	43	43
			24	54	54	54	54	54	54	54	54	54	54	54	54
—	126	350S162	16	43	43	43	54	43	43	43	43	54	54	54	54
			24	54	54	54	68	54	54	54	54	68	68	68	68
		550S162	16	43	43	43	43	43	43	43	43	43	43	43	43
			24	54	54	54	54	54	54	54	54	54	54	54	54
—	< 139	350S162	16	43	43	43	54	43	43	54	54	54	54	54	54
			24	54	54	54	68	54	54	54	54	68	68	68	68
		550S162	16	43	43	43	43	43	43	43	43	43	43	43	43
			24	54	54	54	54	54	54	54	54	54	54	54	54

For SI: 1 inch = 25.4 mm, 1 foot = 304.8 mm, 1 mil = 0.0254 mm, 1 mile per hour = 0.447 m/s, 1 pound per square foot = 0.0479 kPa, 1 ksi = 1,000 psi = 6.895 MPa.

a. Deflection criterion: *L*/240.

b. Design load assumptions:

Top- and middle-floor dead load is 10 psf.

Top-floor live load is 30 psf.

Middle-floor live load is 40 psf.

Roof/ceiling dead load is 12 psf.

Attic live load is 10 psf.

c. Building width is in the direction of horizontal framing members supported by the wall studs.

d. Minimum Grade 33 ksi steel shall be used for 33 mil and 43 mil thicknesses. Minimum Grade 50 ksi steel shall be used for 54 and 68 mil thicknesses.

TABLE R603.3.2(15)
36-FOOT-WIDE BUILDING SUPPORTING TWO FLOORS, ROOF AND CEILING[a, b, c, d]

ULTIMATE WIND SPEED AND EXPOSURE CATEGORY (mph)		MEMBER SIZE	STUD SPACING (inches)	MINIMUM STUD THICKNESS (mils)											
				8-foot Studs				9-foot Studs				10-foot Studs			
				Ground Snow Load (psf)											
Exp. B	Exp. C			20	30	50	70	20	30	50	70	20	30	50	70
115	—	350S162	16	54	54	54	54	43	43	43	54	54	54	54	54
			24	68	68	68	68	54	54	54	68	68	68	68	68
		550S162	16	43	43	43	54	43	43	43	43	43	43	43	43
			24	54	54	54	54	54	54	54	54	54	54	54	54
126	110	350S162	16	54	54	54	54	43	43	43	54	54	54	54	54
			24	68	68	68	68	54	54	54	68	68	68	68	68
		550S162	16	43	43	43	54	43	43	43	43	43	43	43	43
			24	54	54	54	54	54	54	54	54	54	54	54	54
< 139	115	350S162	16	54	54	54	54	43	43	43	54	54	54	54	54
			24	68	68	68	68	54	54	54	68	68	68	68	68
		550S162	16	43	43	43	54	43	43	43	43	43	43	43	43
			24	54	54	54	54	54	54	54	54	54	54	54	54
—	126	350S162	16	54	54	54	54	43	43	54	54	54	54	54	54
			24	68	68	68	68	54	54	54	68	68	68	68	68
		550S162	16	43	43	43	54	43	43	43	43	43	43	43	43
			24	54	54	54	54	54	54	54	54	54	54	54	54
—	< 139	350S162	16	54	54	54	54	54	54	54	54	54	54	54	68
			24	68	68	68	68	54	54	68	68	68	68	68	68
		550S162	16	43	43	43	54	43	43	43	43	43	43	43	43
			24	54	54	54	54	54	54	54	54	54	54	54	54

For SI: 1 inch = 25.4 mm, 1 foot = 304.8 mm, 1 mil = 0.0254 mm, 1 mile per hour = 0.447 m/s, 1 pound per square foot = 0.0479 kPa, 1 ksi = 1,000 psi = 6.895 MPa.

a. Deflection criterion: *L*/240.

b. Design load assumptions:
Top- and middle-floor dead load is 10 psf.
Top-floor live load is 30 psf.
Middle-floor live load is 40 psf.
Roof/ceiling dead load is 12 psf.
Attic live load is 10 psf.

c. Building width is in the direction of horizontal framing members supported by the wall studs.

d. Minimum Grade 33 ksi steel shall be used for 33 mil and 43 mil thicknesses. Minimum Grade 50 ksi steel shall be used for 54 and 68 mil thicknesses.

TABLE R603.3.2(16)
40-FOOT-WIDE BUILDING SUPPORTING TWO FLOORS, ROOF AND CEILING[a, b, c, d]

ULTIMATE WIND SPEED AND EXPOSURE CATEGORY (mph)		MEMBER SIZE	STUD SPACING (inches)	MINIMUM STUD THICKNESS (mils)											
				8-foot Studs				9-foot Studs				10-foot Studs			
				Ground Snow Load (psf)											
Exp. B	Exp. C			20	30	50	70	20	30	50	70	20	30	50	70
115	—	350S162	16	54	54	54	54	54	54	54	54	54	54	54	54
			24	68	68	68	68	68	68	68	68	68	68	68	68
		550S162	16	54	54	54	54	43	43	54	54	43	43	54	54
			24	54	54	54	68	54	54	54	54	54	54	54	54
126	110	350S162	16	54	54	54	54	54	54	54	54	54	54	54	54
			24	68	68	68	68	68	68	68	68	68	68	68	68
		550S162	16	54	54	54	54	43	43	54	54	43	43	54	54
			24	54	54	54	68	54	54	54	54	54	54	54	54
< 139	115	350S162	16	54	54	54	54	54	54	54	54	54	54	54	54
			24	68	68	68	68	68	68	68	68	68	68	68	68
		550S162	16	54	54	54	54	43	43	54	54	43	43	54	54
			24	54	54	54	68	54	54	54	54	54	54	54	54
—	126	350S162	16	54	54	54	54	54	54	54	54	54	54	54	54
			24	68	68	68	68	68	68	68	68	68	68	68	68
		550S162	16	54	54	54	54	43	43	54	54	43	43	54	54
			24	54	54	54	68	54	54	54	54	54	54	54	54
—	< 139	350S162	16	54	54	54	54	54	54	54	54	54	54	54	54
			24	68	68	68	68	68	68	68	68	68	68	68	—
		550S162	16	54	54	54	54	43	43	54	54	43	43	54	54
			24	54	54	54	68	54	54	54	54	54	54	54	54

For SI: 1 inch = 25.4 mm, 1 foot = 304.8 mm, 1 mil = 0.0254 mm, 1 mile per hour = 0.447 m/s, 1 pound per square foot = 0.0479 kPa, 1 ksi = 1,000 psi = 6.895 MPa.

a. Deflection criterion: *L*/240.

b. Design load assumptions:
Top and middle floor dead load is 10 psf.
Top floor live load is 30 psf.
Middle floor live load is 40 psf.
Roof/ceiling dead load is 12 psf.
Attic live load is 10 psf.

c. Building width is in the direction of horizontal framing members supported by the wall studs.

d. Minimum Grade 33 ksi steel shall be used for 33 mil and 43 mil thicknesses. Minimum Grade 50 ksi steel shall be used for 54 and 68 mil thicknesses.

R603.3.2.1 Gable endwalls. The size and thickness of gable endwall studs with heights less than or equal to 10 feet (3048 mm) shall be permitted in accordance with the limits set forth in Table R603.3.2.1(1). The size and thickness of gable endwall studs with heights greater than 10 feet (3048 mm) shall be determined in accordance with the limits set forth in Table R603.3.2.1(2)

R603.3.3 Stud bracing. The flanges of cold-formed steel studs shall be laterally braced in accordance with one of the following:

1. Gypsum board on both sides, structural sheathing on both sides, or gypsum board on one side and structural sheathing on the other side of load-bearing walls with gypsum board installed with minimum No. 6 screws in accordance with Section R702 and structural sheathing installed in accordance with Section R603.9 and Table R603.3.2(1).
2. Horizontal steel straps fastened in accordance with Figure R603.3.3(1) on both sides at mid-height for 8-foot (2438 mm) walls, and at one-third points for 9-foot and 10-foot (2743 mm and 3048 mm) walls. Horizontal steel straps shall be not less than $1^1/_2$ inches in width and 33 mils in thickness (38 mm by 0.84 mm). Straps shall be attached to the flanges of studs with one No. 8 screw. In-line blocking shall be installed between studs at the termination of straps and at 12-foot (3658 mm) intervals along the strap. Straps shall be fastened to the blocking with two No. 8 screws.
3. Sheathing on one side and strapping on the other side fastened in accordance with Figure R603.3.3(2). Sheathing shall be installed in accordance with Item 1. Steel straps shall be installed in accordance with Item 2.

TABLE R603.3.2.1(1)
ALL BUILDING WIDTHS GABLE ENDWALLS 8, 9 OR 10 FEET IN HEIGHT[a, b, c, d]

ULTIMATE WIND SPEED AND EXPOSURE CATEGORY (mph)		MEMBER SIZE	STUD SPACING (inches)	MINIMUM STUD THICKNESS (mils)		
Exp. B	Exp. C			8-foot Studs	9-foot Studs	10-foot Studs
115	—	350S162	16	33	33	33
			24	33	33	33
		550S162	16	33	33	33
			24	33	33	33
126	110	350S162	16	33	33	33
			24	33	33	43
		550S162	16	33	33	33
			24	33	33	33
< 139	115	350S162	16	33	33	33
			24	33	33	43
		550S162	16	33	33	33
			24	33	33	33
—	126	350S162	16	33	33	43
			24	43	43	54
		550S162	16	33	33	33
			24	33	33	33
—	< 139	350S162	16	33	43	43
			24	43	54	54
		550S162	16	33	33	33
			24	33	33	43

For SI: 1 inch = 25.4 mm, 1 foot = 304.8 mm, 1 mil = 0.0254 mm, 1 mile per hour = 0.447 m/s, 1 pound per square foot = 0.0479 kPa, 1 ksi = 1,000 psi = 6.895 MPa.

a. Deflection criterion $L/240$.

b. Design load assumptions:
Ground snow load is 70 psf.
Roof/ceiling dead load is 12 psf.
Floor dead load is 10 psf.
Floor live load is 40 psf.
Attic dead load is 10 psf.

c. Building width is in the direction of horizontal framing members supported by the wall studs.

d. Minimum Grade 33 ksi steel shall be used for 33 mil and 43 mil thicknesses. Minimum Grade 50 ksi steel shall be used for 54 and 68 mil thicknesses.

TABLE R603.3.2.1(2)
ALL BUILDING WIDTHS GABLE ENDWALLS OVER 10 FEET IN HEIGHT[a, b, c, d]

ULTIMATE WIND SPEED AND EXPOSURE CATEGORY (mph)		MEMBER SIZE	STUD SPACING (inches)	MINIMUM STUD THICKNESS (mils)					
				Stud Height, *h* (feet)					
Exp. B	Exp. C			$10 < h \leq 12$	$12 < h \leq 14$	$14 < h \leq 16$	$16 < h \leq 18$	$18 < h \leq 20$	$20 < h \leq 22$
115	—	350S162	16	33	43	68	—	—	—
			24	43	68	—	—	—	—
		550S162	16	33	33	33	43	54	54
			24	33	33	43	54	68	—
126	110	350S162	16	43	54	—	—	—	—
			24	54	—	—	—	—	—
		550S162	16	33	33	43	54	54	68
			24	33	43	54	54	—	—
< 139	115	350S162	16	43	68	—	—	—	—
			24	68	—	—	—	—	—
		550S162	16	33	43	43	54	68	—
			24	43	54	54	68	—	—
—	126	350S162	16	54	—	—	—	—	—
			24	—	—	—	—	—	—
		550S162	16	33	43	54	54	—	—
			24	43	54	54	—	—	—
—	< 139	350S162	16	54	—	—	—	—	—
			24	—	—	—	—	—	—
		550S162	16	43	54	54	68	—	—
			24	54	54	68	—	—	—

For SI: 1 inch = 25.4 mm, 1 foot = 304.8 mm, 1 mil = 0.0254 mm, 1 mile per hour = 0.447 m/s, 1 pound per square foot = 0.0479 kPa, 1 ksi = 1,000 psi = 6.895 MPa.

a. Deflection criterion *L*/240.

b. Design load assumptions:
Ground snow load is 70 psf.
Roof/ceiling dead load is 12 psf.
Floor dead load is 10 psf.
Floor live load is 40 psf.
Attic dead load is 10 psf.

c. Building width is in the direction of horizontal framing members supported by the wall studs.

d. Minimum Grade 33 ksi steel shall be used for 33 mil and 43 mil thicknesses. Minimum Grade 50 ksi steel shall be used for 54 and 68 mil thicknesses.

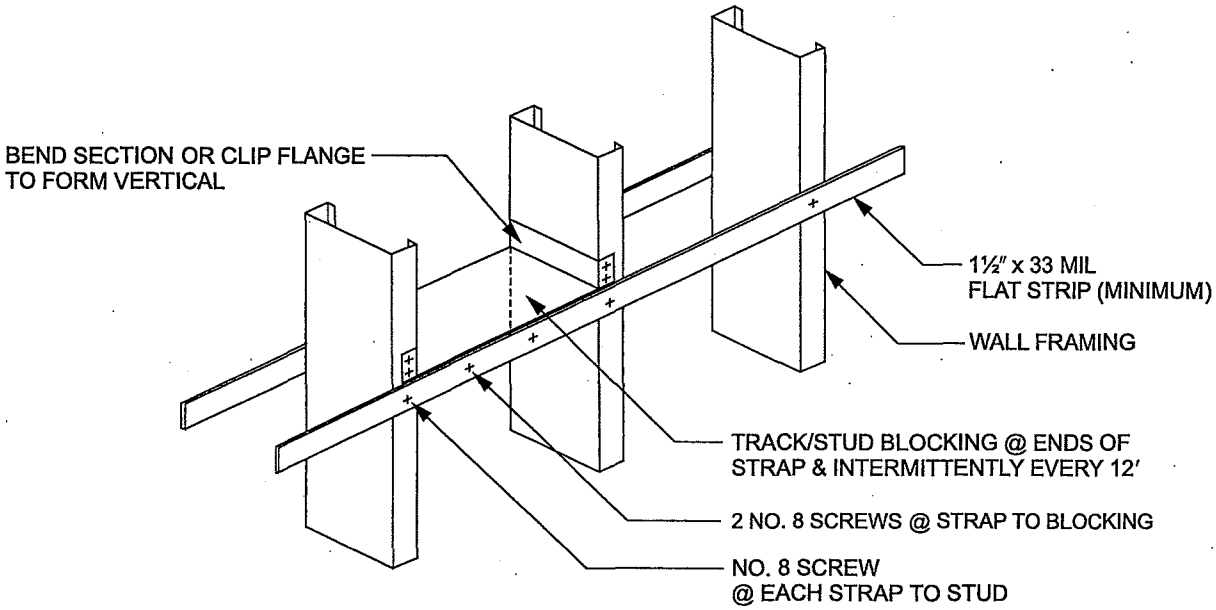

For SI: 1 mil = 0.0254 mm, 1 inch = 25.4 mm, 1 foot = 304.8 mm.

FIGURE R603.3.3(1)
STUD BRACING WITH STRAPPING ONLY

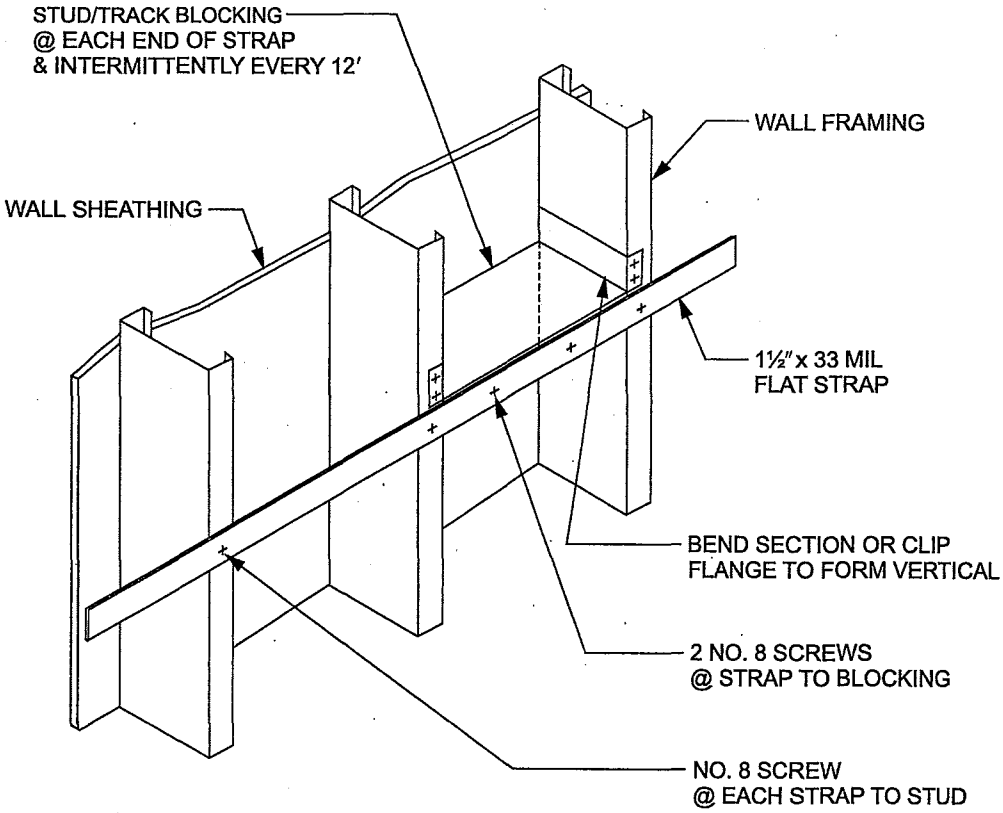

For SI: 1 mil = 0.0254 mm, 1 inch = 25.4 mm, 1 foot = 304.8 mm.

FIGURE R603.3.3(2)
STUD BRACING WITH STRAPPING AND SHEATHING MATERIAL

R603.3.4 Cutting and notching. Flanges and lips of cold-formed steel studs and headers shall not be cut or notched.

R603.3.5 Splicing. Steel studs and other structural members shall not be spliced. Tracks shall be spliced in accordance with Figure R603.3.5.

R603.4 Corner framing. In exterior walls, corner studs and the top tracks shall be installed in accordance with Figure R603.4.

R603.5 Exterior wall covering. The method of attachment of exterior wall covering materials to cold-formed steel stud wall framing shall conform to the manufacturer's installation instructions.

R603.6 Headers. Headers shall be installed above all wall openings in exterior walls and interior load-bearing walls. Box beam headers and back-to-back headers each shall be formed from two equal sized C-shaped members in accordance with Figures R603.6(1) and R603.6(2), respectively, and Tables R603.6(1) through R603.6(6). L-shaped headers shall be permitted to be constructed in accordance with AISI S230. Alternately, headers shall be permitted to be designed and constructed in accordance with AISI S100, Section D4.

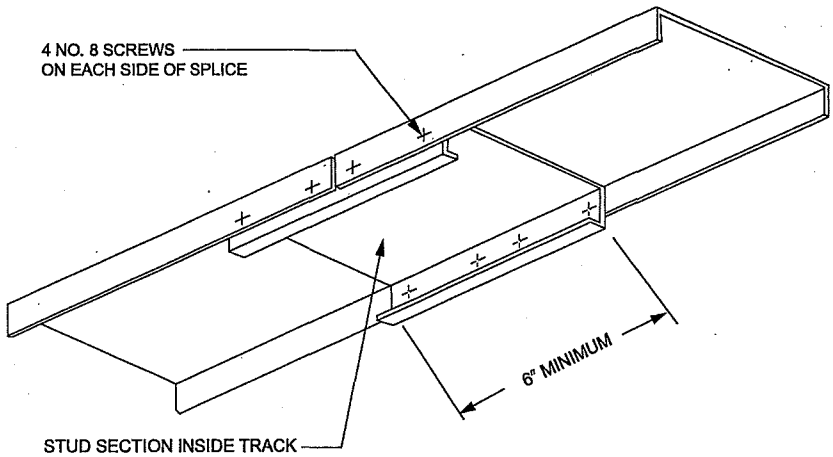

For SI: 1 inch = 25.4 mm.

FIGURE R603.3.5
TRACK SPLICE

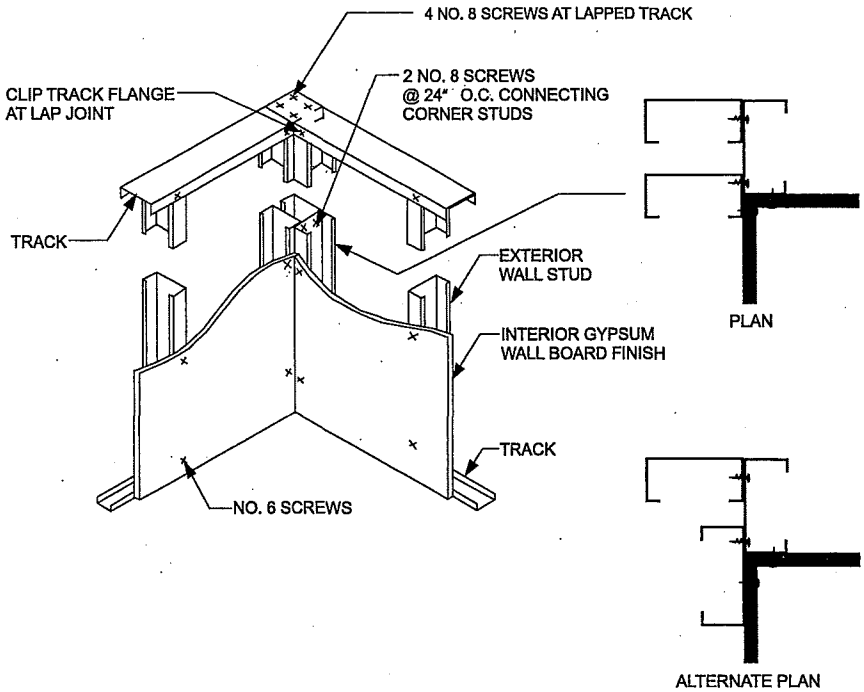

For SI: 1 inch = 25.4 mm.

FIGURE R603.4
CORNER FRAMING

2695

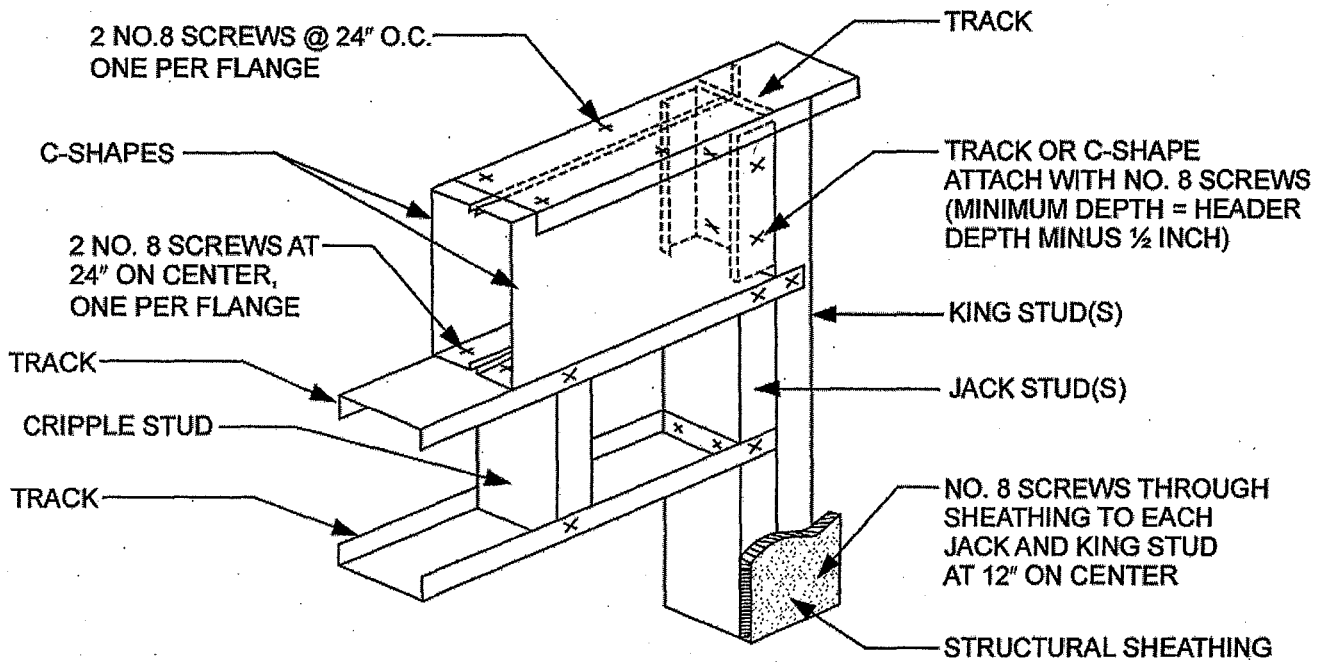

For SI: 1 inch = 25.4 mm.

FIGURE R603.6(1)
BOX BEAM HEADER

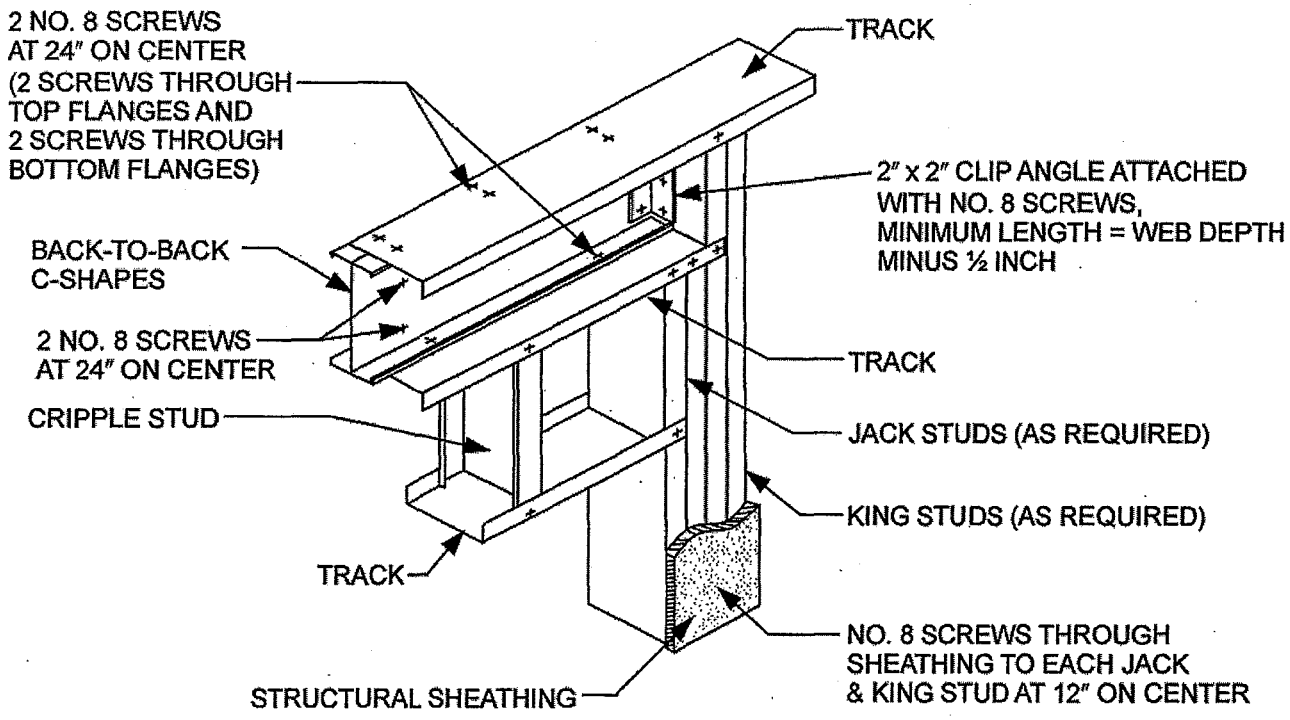

For SI: 1 inch = 25.4 mm.

FIGURE R603.6(2)
BACK-TO-BACK HEADER

TABLE R603.6(1)
BOX-BEAM AND BACK-TO-BACK HEADER SPANS
Headers Supporting Roof and Ceiling Only[a, b, d]

MEMBER DESIGNATION	GROUND SNOW LOAD (20 psf)					GROUND SNOW LOAD (30 psf)				
	Building width[c] (feet)					Building width[c] (feet)				
	24	28	32	36	40	24	28	32	36	40
2-350S162-33	3′-3″	2′-8″	2′-2″	—	—	2′-8″	2′-2″	—	—	—
2-350S162-43	4′-2″	3′-9″	3′-4″	2′-11″	2′-7″	3′-9″	3′-4″	2′-11″	2′-7″	2′-2″
2-350S162-54	6′-2″	5′-10″	5′-8″	5′-3″	4′-10″	5′-11″	5′-8″	5′-2″	4′-10″	4′-6″
2-350S162-68	6′-7″	6′-3″	6′-0″	5′-10″	5′-8″	6′-4″	6′-1″	5′-10″	5′-8″	5′-6″
2-550S162-33	4′-8″	4′-0″	3′-6″	3′-0″	2′-6″	4′-1″	3′-6″	3′-0″	2′-6″	—
2-550S162-43	6′-0″	5′-4″	4′-10″	4′-4″	3′-11″	5′-5″	4′-10″	4′-4″	3′-10″	3′-5″
2-550S162-54	8′-9″	8′-5″	8′-1″	7′-9″	7′-3″	8′-6″	8′-1″	7′-8″	7′-2″	6′-8″
2-550S162-68	9′-5″	9′-0″	8′-8″	8′-4″	8′-1″	9′-1″	8′-8″	8′-4″	8′-1″	7′-10″
2-800S162-33	4′-5″	3′-11″	3′-5″	3′-1″	2′-10″	3′-11″	3′-6″	3′-1″	2′-9″	2′-3″
2-800S162-43	7′-3″	6′-7″	5′-11″	5′-4″	4′-10″	6′-7″	5′-11″	5′-4″	4′-9″	4′-3″
2-800S162-54	10′-10″	10′-2″	9′-7″	9′-0″	8′-5″	10′-2″	9′-7″	8′-11″	8′-4″	7′-9″
2-800S162-68	12′-8″	11′-10″	11′-2″	10′-7″	10′-1″	11′-11″	11′-2″	10′-7″	10′-0″	9′-6″
2-1000S162-43	7′-10″	6′-10″	6′-1″	5′-6″	5′-0″	6′-11″	6′-1″	5′-5″	4′-11″	4′-6″
2-1000S162-54	12′-3″	11′-5″	10′-9″	10′-2″	9′-6″	11′-6″	10′-9″	10′-1″	9′-5″	8′-9″
2-1000S162-68	14′-5″	13′-5″	12′-8″	12′-0″	11′-6″	13′-6″	12′-8″	12′-0″	11′-5″	10′-10″
2-1200S162-54	12′-11″	11′-3″	10′-0″	9′-0″	8′-2″	11′-5″	10′-0″	9′-0″	8′-1″	7′-4″
2-1200S162-68	15′-11″	14′-10″	14′-0″	13′-4″	12′-8″	15′-0″	14′-0″	13′-3″	12′-7″	11′-11″

For SI: 1 inch = 25.4 mm, 1 foot = 304.8 mm, 1 pound per square foot = 0.0479 kPa, 1 pound per square inch = 6.895 kPa.

a. Deflection criteria: *L*/360 for live loads, *L*/240 for total loads.

b. Design load assumptions:

Roof/ceiling dead load is 12 psf.

Attic dead load is 10 psf.

c. Building width is in the direction of horizontal framing members supported by the header.

d. Minimum Grade 33 ksi steel shall be used for 33 mil and 43 mil thicknesses. Minimum Grade 50 ksi steel shall be used for 54 and 68 mil thicknesses.

TABLE R603.6(2)
BOX-BEAM AND BACK-TO-BACK HEADER SPANS
Headers Supporting Roof and Ceiling Only[a, b, d]

MEMBER DESIGNATION	GROUND SNOW LOAD (50 psf)					GROUND SNOW LOAD (70 psf)				
	Building width[c] (feet)					Building width[c] (feet)				
	24	28	32	36	40	24	28	32	36	40
2-350S162-33	—	—	—	—	—	—	—	—	—	—
2-350S162-43	2′-4″	—	—	—	—	—	—	—	—	—
2-350S162-54	4′-8″	4′-2″	3′-9″	3′-5″	3′-1″	3′-7″	3′-2″	2′-9″	2′-5″	2′-0″
2-350S162-68	5′-7″	5′-2″	4′-9″	4′-4″	3′-11″	4′-7″	4′-1″	3′-7″	3′-2″	2′-10″
2-550S162-33	2′-2″	—	—	—	—	—	—	—	—	—
2-550S162-43	3′-8″	3′-1″	2′-6″	—	—	2′-3″	—	—	—	—
2-550S162-54	6′-11″	6′-3″	5′-9″	5′-3″	4′-9″	5′-6″	4′-11″	4′-5″	3′-11″	3′-5″
2-550S162-68	8′-0″	7′-6″	6′-11″	6′-5″	5′-11″	6′-9″	6′-1″	5′-6″	5′-0″	4′-7″
2-800S162-33	2′-7″	—	—	—	—	—	—	—	—	—
2-800S162-43	4′-6″	3′-9″	3′-1″	2′-5″	—	2′-10″	—	—	—	—
2-800S162-54	8′-0″	7′-3″	6′-8″	6′-1″	5′-7″	6′-5″	5′-9″	5′-1″	4′-7″	4′-0″
2-800S162-68	9′-9″	9′-0″	8′-3″	7′-8″	7′-1″	8′-0″	7′-3″	6′-7″	6′-0″	5′-6″
2-1000S162-43	4′-8″	4′-1″	3′-6″	2′-9″	—	3′-3″	2′-2″	—	—	—
2-1000S162-54	9′-1″	8′-2″	7′-3″	6′-7″	6′-0″	7′-0″	6′-2″	5′-6″	5′-0″	4′-6″
2-1000S162-68	11′-1″	10′-2″	9′-5″	8′-8″	8′-1″	9′-1″	8′-3″	7′-6″	6′-10″	6′-3″
2-1200S162-54	7′-8″	6′-9″	6′-1″	5′-6″	5′-0″	5′-10″	5′-1″	4′-7″	4′-1″	3′-9″
2-1200S162-68	12′-3″	11′-3″	10′-4″	9′-7″	8′-11″	10′-1″	9′-1″	8′-3″	7′-6″	6′-10″

For SI: 1 inch = 25.4 mm, 1 foot = 304.8 mm, 1 pound per square foot = 0.0479 kPa, 1 pound per square inch = 6.895 kPa.

a. Deflection criteria: *L*/360 for live loads, *L*/240 for total loads.

b. Design load assumptions:
Roof/ceiling dead load is 12 psf.
Attic dead load is 10 psf.

c. Building width is in the direction of horizontal framing members supported by the header.

d. Minimum Grade 33 ksi steel shall be used for 33 mil and 43 mil thicknesses. Minimum Grade 50 ksi steel shall be used for 54 and 68 mil thicknesses.

TABLE R603.6(3)
BOX-BEAM AND BACK-TO-BACK HEADER SPANS
Headers Supporting One Floor, Roof and Ceiling[a, b, d]

MEMBER DESIGNATION	GROUND SNOW LOAD (20 psf)					GROUND SNOW LOAD (30 psf)				
	Building width[c] (feet)					Building width[c] (feet)				
	24	28	32	36	40	24	28	32	36	40
2-350S162-33	—	—	—	—	—	—	—	—	—	—
2-350S162-43	2′-2″	—	—	—	—	2′-1″	—	—	—	—
2-350S162-54	4′-4″	3′-10″	3′-5″	3′-1″	2′-9″	4′-3″	2′-9″	3′-4″	3′-0″	2′-8″
2-350S162-68	5′-0″	4′-9″	4′-7″	4′-2″	3′-9″	4′-11″	4′-8″	4′-6″	4′-1″	3′-9″
2-550S162-33	—	—	—	—	—	—	—	—	—	—
2-550S162-43	3′-5″	2′-9″	2′-1″	—	—	3′-3″	2′-7″	—	—	—
2-550S162-54	6′-6″	5′-10″	5′-3″	4′-9″	4′-4″	6′-4″	5′-9″	5′-2″	4′-8″	4′-3″
2-550S162-68	7′-2″	6′-10″	6′-5″	5′-11″	5′-6″	7′-0″	6′-9″	6′-4″	5′-10″	5′-4″
2-800S162-33	2′-1″	—	—	—	—	—	—	—	—	—
2-800S162-43	4′-2″	3′-4″	2′-7″	—	—	4′-0″	3′-3″	2′-5″	—	—
2-800S162-54	7′-6″	6′-9″	6′-2″	5′-7″	5′-0″	7′-5″	6′-8″	6′-0″	5′-5″	4′-11″
2-800S162-68	9′-3″	8′-5″	7′-8″	7′-1″	6′-6″	9′-1″	8′-3″	7′-7″	7′-0″	6′-5″
2-1000S162-43	4′-4″	3′-9″	2′-11″	—	—	4′-3″	3′-8″	2′-9″	—	—
2-1000S162-54	8′-6″	7′-6″	6′-8″	6′-0″	5′-5″	8′-4″	7′-4″	6′-6″	5′-10″	5′-4″
2-1000S162-68	10′-6″	9′-7″	8′-9″	8′-0″	7′-5″	10′-4″	9′-5″	8′-7″	7′-11″	7′-3″
2-1200S162-54	7′-1″	6′-2″	5′-6″	5′-0″	4′-6″	6′-11″	6′-1″	5′-5″	4′-10″	4′-5″
2-1200S162-68	11′-7″	10′-7″	9′-8″	8′-11″	8′-2″	11′-5″	10′-5″	9′-6″	8′-9″	8′-0″

For SI: 1 inch = 25.4 mm, 1 foot = 304.8 mm, 1 pound per square foot = 0.0479 kPa, 1 pound per square inch = 6.895 kPa.

a. Deflection criteria: *L*/360 for live loads, *L*/240 for total loads.

b. Design load assumptions:
Second-floor dead load is 10 psf.
Roof/ceiling dead load is 12 psf.
Second-floor live load is 30 psf.
Attic dead load is 10 psf.

c. Building width is in the direction of horizontal framing members supported by the header.

d. Minimum Grade 33 ksi steel shall be used for 33 mil and 43 mil thicknesses. Minimum Grade 50 ksi steel shall be used for 54 and 68 mil thicknesses.

TABLE R603.6(4)
BOX-BEAM AND BACK-TO-BACK HEADER SPANS
Headers Supporting One Floor, Roof and Ceiling[a, b, d]

MEMBER DESIGNATION	GROUND SNOW LOAD (50 psf)					GROUND SNOW LOAD (70 psf)				
	Building width[c] (feet)					Building width[c] (feet)				
	24	28	32	36	40	24	28	32	36	40
2-350S162-33	—	—	—	—	—	—	—	—	—	—
2-350S162-43	—	—	—	—	—	—	—	—	—	—
2-350S162-54	3′-5″	3′-0″	2′-7″	2′-2″	—	2′-8″	2′-2″	—	—	—
2-350S162-68	4′-6″	4′-1″	3′-8″	3′-3″	2′-11″	3′-9″	3′-3″	2′-10″	2′-5″	2′-1″
2-550S162-33	—	—	—	—	—	—	—	—	—	—
2-550S162-43	2′-0″	—	—	—	—	—	—	—	—	—
2-550S162-54	5′-3″	3′-8″	4′-1″	3′-8″	3′-2″	4′-3″	3′-8″	3′-1″	2′-7″	2′-0″
2-550S162-68	6′-5″	5′-10″	5′-3″	4′-9″	4′-4″	5′-5″	4′-9″	4′-3″	3′-9″	3′-4″
2-800S162-33	—	—	—	—	—	—	—	—	—	—
2-800S162-43	2′-6″	—	—	—	—	—	—	—	—	—
2-800S162-54	6′-1″	5′-5″	4′-10″	4′-3″	3′-9″	4′-11″	4′-3″	3′-8″	3′-0″	2′-5″
2-800S162-68	7′-8″	6′-11″	6′-3″	5′-9″	5′-2″	6′-5″	5′-9″	5′-1″	4′-6″	4′-0″
2-1000S162-43	2′-10″	—	—	—	—	—	—	—	—	—
2-1000S162-54	6′-7″	5′-10″	5′-3″	4′-9″	4′-3″	5′-4″	4′-9″	4′-1″	3′-5″	2′-9″
2-1000S162-68	8′-8″	7′-10″	7′-2″	6′-6″	5′-11″	7′-4″	6′-6″	5′-9″	5′-1″	4′-6″
2-1200S162-54	5′-6″	4′-10″	4′-4″	3′-11″	3′-7″	4′-5″	3′-11″	3′-6″	3′-2″	2′-11″
2-1200S162-68	9′-7″	8′-8″	7′-11″	7′-2″	6′-6″	8′-1″	7′-2″	6′-4″	5′-8″	5′-0″

For SI: 1 inch = 25.4 mm, 1 foot = 304.8 mm, 1 pound per square foot = 0.0479 kPa, 1 pound per square inch = 6.895 kPa.

a. Deflection criteria: *L*/360 for live loads, *L*/240 for total loads.

b. Design load assumptions:
Second-floor dead load is 10 psf.
Roof/ceiling dead load is 12 psf.
Second-floor live load is 30 psf.
Attic dead load is 10 psf.

c. Building width is in the direction of horizontal framing members supported by the header.

d. Minimum Grade 33 ksi steel shall be used for 33 mil and 43 mil thicknesses. Minimum Grade 50 ksi steel shall be used for 54 and 68 mil thicknesses.

TABLE R603.6(5)
BOX-BEAM AND BACK-TO-BACK HEADER SPANS
Headers Supporting Two Floors, Roof and Ceiling[a, b, d]

MEMBER DESIGNATION	GROUND SNOW LOAD (20 psf)					GROUND SNOW LOAD (30 psf)				
	Building width[c] (feet)					Building width[c] (feet)				
	24	28	32	36	40	24	28	32	36	40
2-350S162-33	—	—	—	—	—	—	—	—	—	—
2-350S162-43	—	—	—	—	—	—	—	—	—	—
2-350S162-54	2′-5″	—	—	—	—	2′-4″	—	—	—	—
2-350S162-68	3′-6″	3′-0″	2′-6″	2′-1″	—	3′-5″	2′-11″	2′-6″	2′-0″	—
2-550S162-33	—	—	—	—	—	—	—	—	—	—
2-550S162-43	—	—	—	—	—	—	—	—	—	—
2-550S162-54	3′-11″	3′-3″	2′-8″	2′-0″	—	3′-10″	3′-3″	2′-7″	—	—
2-550S162-68	5′-1″	4′-5″	3′-10″	3′-3″	2′-9″	5′-0″	4′-4″	3′-9″	3′-3″	2′-9″
2-800S162-33	—	—	—	—	—	—	—	—	—	—
2-800S162-43	—	—	—	—	—	—	—	—	—	—
2-800S162-54	4′-7″	3′-10″	3′-1″	2′-5″	—	4′-6″	3′-9″	3′-0″	2′-4″	—
2-800S162-68	6′-0″	5′-3″	4′-7″	3′-11″	3′-4″	6′-0″	5′-2″	4′-6″	3′-11″	3′-3″
2-1000S162-43	—	—	—	—	—	—	—	—	—	—
2-1000S162-54	5′-0″	4′-4″	3′-6″	2′-9″	—	4′-11″	4′-3″	3′-5″	2′-7″	—
2-1000S162-68	6′-10″	6′-0″	5′-3″	4′-6″	3′-10″	6′-9″	5′-11″	5′-2″	4′-5″	3′-9″
2-1200S162-54	4′-2″	3′-7″	3′-3″	2′-11″	—	4′-1″	3′-7″	3′-2″	2′-10″	—
2-1200S162-68	7′-7″	6′-7″	5′-9″	5′-0″	4′-2″	7′-6″	6′-6″	5′-8″	4′-10″	4′-1″

For SI: 1 inch = 25.4 mm, 1 foot = 304.8 mm, 1 pound per square foot = 0.0479 kPa, 1 pound per square inch = 6.895 kPa.

a. Deflection criteria: *L*/360 for live loads, *L*/240 for total loads.

b. Design load assumptions:
Second-floor dead load is 10 psf.
Roof/ceiling dead load is 12 psf.
Second-floor live load is 40 psf
Third-floor live load is 30 psf.
Attic live load is 10 psf.

c. Building width is in the direction of horizontal framing members supported by the header.

d. Minimum Grade 33 ksi steel shall be used for 33 mil and 43 mil thicknesses. Minimum Grade 50 ksi steel shall be used for 54 and 68 mil thicknesses.

TABLE R603.6(6)
BOX-BEAM AND BACK-TO-BACK HEADER SPANS
Headers Supporting Two Floors, Roof and Ceiling[a, b, d]

MEMBER DESIGNATION	GROUND SNOW LOAD (50 psf)					GROUND SNOW LOAD (70 psf)				
	Building width[c] (feet)					Building width[c] (feet)				
	24	28	32	36	40	24	28	32	36	40
2-350S162-33	—	—	—	—	—	—	—	—	—	—
2-350S162-43	—	—	—	—	—	—	—	—	—	—
2-350S162-54	2′-2″	—	—	—	—	—	—	—	—	—
2-350S162-68	3′-3″	2′-9″	2′-3″	—	—	2′-11″	2′-5″	—	—	—
2-550S162-33	—	—	—	—	—	—	—	—	—	—
2-550S162-43	—	—	—	—	—	—	—	—	—	—
2-550S162-54	3′-7″	2′-11″	2′-3″	—	—	3′-3″	2′-7″	—	—	—
2-550S162-68	4′-9″	2′-1″	3′-6″	3′-0″	2′-5″	4′-4″	3′-9″	3′-2″	2′-8″	2′-1″
2-800S162-33	—	—	—	—	—	—	—	—	—	—
2-800S162-43	—	—	—	—	—	—	—	—	—	—
2-800S162-54	4′-3″	3′-5″	2′-8″	—	—	3′-9″	3′-0″	2′-3″	—	—
2-800S162-68	5′-8″	4′-11″	4′-2″	3′-7″	2′-11″	5′-3″	4′-6″	3′-10″	3′-3″	2′-7″
2-1000S162-43	—	—	—	—	—	—	—	—	—	—
2-1000S162-54	4′-8″	3′-11″	3′-1″	2′-2″	—	4′-3″	3′-5″	2′-7″	—	—
2-1000S162-68	6′-5″	5′-7″	4′-9″	4′-1″	3′-4″	5′-11″	5′-1″	4′-5″	3′-8″	2′-11″
2-1200S162-54	3′-11″	3′-5″	3′-0″	2′-4″	—	3′-7″	3′-2″	2′-10″	—	—
2-1200S162-68	7′-1″	6′-2″	5′-3″	4′-6″	3′-8″	6′-6″	5′-8″	4′-10″	4′-0″	3′-3″

For SI: 1 inch = 25.4 mm, 1 foot = 304.8 mm, 1 pound per square foot = 0.0479 kPa, 1 pound per square inch = 6.895 kPa.

a. Deflection criteria: *L*/360 for live loads, *L*/240 for total loads.

b. Design load assumptions:
Second-floor dead load is 10 psf.
Roof/ceiling dead load is 12 psf.
Second-floor live load is 40 psf
Third-floor live load is 30 psf.
Attic live load is 10 psf.

c. Building width is in the direction of horizontal framing members supported by the header.

d. Minimum Grade 33 ksi steel shall be used for 33 mil and 43 mil thicknesses. Minimum Grade 50 ksi steel shall be used for 54 and 68 mil thicknesses.

R603.6.1 Headers in gable endwalls. Box beam and back-to-back headers in gable endwalls shall be permitted to be constructed in accordance with Section R603.6 or with the header directly above the opening in accordance with Figures R603.6.1(1) and R603.6.1(2) and the following provisions:

1. Two 362S162-33 for openings less than or equal to 4 feet (1219 mm).
2. Two 600S162-43 for openings greater than 4 feet (1219 mm) but less than or equal to 6 feet (1830 mm).
3. Two 800S162-54 for openings greater than 6 feet (1829 mm) but less than or equal to 9 feet (2743 mm).

R603.7 Jack and king studs. The number of jack and king studs installed on each side of a header shall comply with Table R603.7(1). King, jack and cripple studs shall be of the same dimension and thickness as the adjacent wall studs. Headers shall be connected to king studs in accordance with Table R603.7(2) and the following provisions:

1. For box beam headers, one-half of the total number of required screws shall be applied to the header and one-half to the king stud by use of C-shaped or track member in accordance with Figure R603.6(1). The track or C-shaped sections shall extend the depth of the header minus $^1/_2$ inch (12.7 mm) and shall have a minimum thickness not less than that of the wall studs.
2. For back-to-back headers, one-half the total number of screws shall be applied to the header and one-half to the king stud by use of a minimum 2-inch by 2-inch (51 mm by 51 mm) clip angle in accordance with Figure R603.6(2). The clip angle shall extend the depth of the header minus $^1/_2$ inch (12.7 mm) and shall have a minimum thickness not less than that of the wall studs. Jack and king studs shall be interconnected with structural sheathing in accordance with Figures R603.6(1) and R603.6(2).

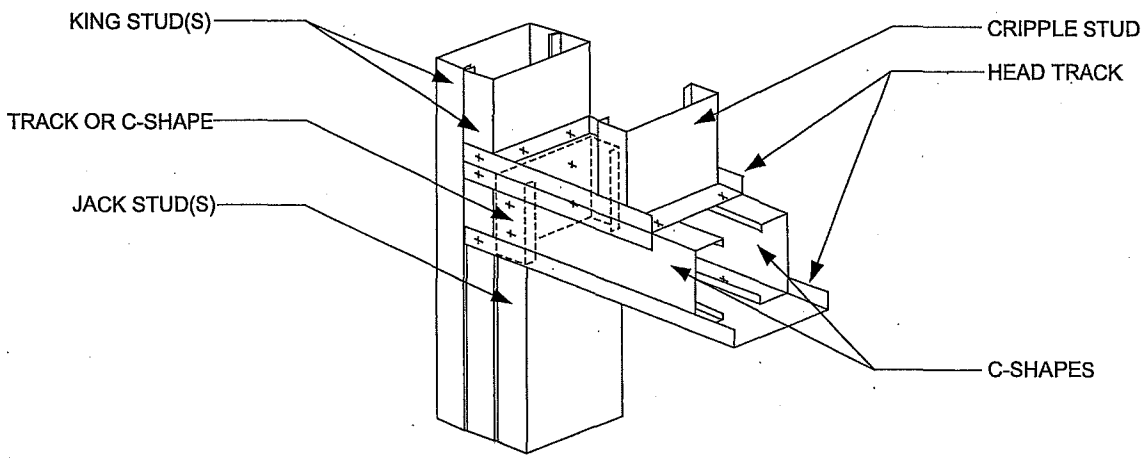

FIGURE R603.6.1(1)
BOX BEAM HEADER IN GABLE ENDWALL

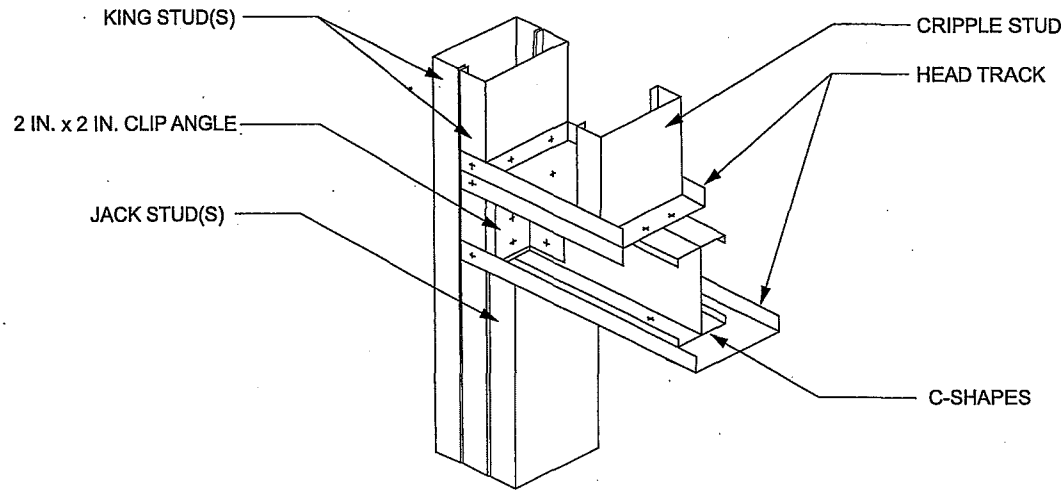

For SI: 1 inch = 25.4 mm.

FIGURE R603.6.1(2)
BACK-TO-BACK HEADER IN GABLE ENDWALL

TABLE R603.7(1)
TOTAL NUMBER OF JACK AND KING STUDS REQUIRED AT EACH END OF AN OPENING

SIZE OF OPENING (feet-inches)	24-INCH O.C. STUD SPACING		16-INCH O.C. STUD SPACING	
	No. of jack studs	No. of king studs	No. of jack studs	No. of king studs
Up to 3′-6″	1	1	1	1
> 3′-6″ to 5′-0″	1	2	1	2
> 5′-0″ to 5′-6″	1	2	2	2
> 5′-6″ to 8′-0″	1	2	2	2
> 8′-0″ to 10′-6″	2	2	2	3
> 10′-6″ to 12′-0″	2	2	3	3
> 12′-0″ to 13′-0″	2	3	3	3
> 13′-0″ to 14′-0″	2	3	3	4
> 14′-0″ to 16′-0″	2	3	3	4
> 16′-0″ to 18′-0″	3	3	4	4

For SI: 1 inch = 25.4 mm, 1 foot = 304.8 mm.

TABLE R603.7(2)
HEADER TO KING STUD CONNECTION REQUIREMENTS[a, b, c, d]

HEADER SPAN (feet)	ULTIMATE WIND SPEED (mph), EXPOSURE CATEGORY	
	110, Exposure Category C or less than 139, Exposure Category B	Less than 139, Exposure Category C
≤ 4′	4-No. 8 screws	6-No. 8 screws
> 4′ to 8′	4-No. 8 screws	8-No. 8 screws
> 8′ to 12′	6-No. 8 screws	10-No. 8 screws
> 12′ to 16′	8-No. 8 screws	12-No. 8 screws

For SI: 1 inch = 25.4 mm, 1 foot = 304.8 mm, 1 mile per hour = 0.447 m/s, 1 pound = 4.448 N.

a. All screw sizes shown are minimum.

b. For headers located on the first floor of a two-story building or the first or second floor of a three-story building, the total number of screws is permitted to be reduced by 2 screws, but the total number of screws shall not be less than four.

c. For roof slopes of 6:12 or greater, the required number of screws shall be permitted to be reduced by half, but the total number of screws shall not be less than four.

d. Screws can be replaced by an uplift connector that has a capacity of the number of screws multiplied by 164 pounds.

R603.8 Head and sill track. Head track spans above door and window openings and sill track spans beneath window openings shall comply with Table R603.8. For openings less than 4 feet (1219 mm) in height that have both a head track and a sill track, multiplying the spans by 1.75 shall be permitted in Table R603.8. For openings less than or equal to 6 feet (1829 mm) in height that have both a head track and a sill track, multiplying the spans in Table R603.8 by 1.50 shall be permitted.

R603.9 Structural sheathing. Structural sheathing shall be installed in accordance with Figure R603.9 and this section on all sheathable exterior wall surfaces, including areas above and below openings.

R603.9.1 Sheathing materials. Structural sheathing panels shall consist of minimum $^{7}/_{16}$-inch-thick (11 mm) oriented strand board or $^{15}/_{32}$-inch-thick (12 mm) plywood.

R603.9.2 Determination of minimum length of full-height sheathing. The minimum length of full-height sheathing on each *braced wall line* shall be determined by multiplying the length of the *braced wall line* by the percentage obtained from Table R603.9.2(1) and by the plan aspect-ratio adjustment factors obtained from Table R603.9.2(2). The minimum length of full-height sheathing shall be not less than 20 percent of the *braced wall line* length.

To be considered full-height sheathing, structural sheathing shall extend from the bottom to the top of the wall without interruption by openings. Only sheathed, full-height wall sections, uninterrupted by openings, which are not less than 48 inches (1219 mm) wide, shall be counted toward meeting the minimum percentages in Table R603.9.2(1). In addition, structural sheathing shall comply with all of the following requirements:

1. Be installed with the long dimension parallel to the stud framing and shall cover the full vertical height of wall from the bottom of the bottom track to the top of the top track of each *story*. Installing the long dimension perpendicular to the stud framing or using shorter segments shall be permitted provided that the horizontal joint is blocked as described in Item 2.
2. Be blocked where the long dimension is installed perpendicular to the stud framing. Blocking shall be not less than 33 mil (0.84 mm) thickness. Each horizontal structural sheathing panel shall be fastened with No. 8 screws spaced at 6 inches (152 mm) on center to the blocking at the joint.

TABLE R603.8
HEAD AND SILL TRACK SPAN

ULTIMATE WIND SPEED AND EXPOSURE CATEGORY (mph)		ALLOWABLE HEAD AND SILL TRACK SPAN[a, b, c] (feet-inches)					
		TRACK DESIGNATION[d]					
B	C	350T125-33	350T125-43	350T125-54	550T125-33	550T125-43	550T125-54
115	—	4′-10″	5′-5″	6′-0″	5′-8″	6′-3″	6′-10″
126	110	4′-6″	5′-1″	5′-8″	5′-4″	5′-11″	6′-5″
< 139	115	4′-2″	4′-9″	5′-4″	5′-1″	5′-7″	6′-1″
—	126	3′-11″	4′-6″	5′-0″	4′-10″	5′-4″	5′-10″
—	< 139	3′-8″	4′-2″	4′-9″	4′-1″	5′-1″	5′-7″

For SI: 1 inch = 25.4 mm, 1 foot = 304.8 mm, 1 mile per hour = 0.447 m/s.

a. Deflection limit: *L*/240.

b. Head and sill track spans are based on components and cladding wind pressures and 48-inch tributary span.

c. For openings less than 4 feet in height that have both a head track and sill track, the spans are permitted to be multiplied by 1.75. For openings less than or equal to 6 feet in height that have both a head track and a sill track, the spans are permitted to be multiplied by a factor of 1.5.

d. Minimum Grade 33 ksi steel shall be used for 33 mil and 43 mil thicknesses. Minimum Grade 50 ksi steel shall be used for 54 and 68 mil thicknesses.

3. Be applied to each end (corners) of each of the exterior walls with a minimum 48-inch-wide (1219 mm) panel.

Exception: Where stone or masonry veneer is installed, the required length of full-height sheathing and overturning anchorage required shall be determined in accordance with Section R603.9.5.

R603.9.2.1 Full height sheathing. The minimum percentage of full-height structural sheathing shall be multiplied by 1.10 for 9-foot-high (2743 mm) walls and multiplied by 1.20 for 10-foot-high (3048 mm) walls.

R603.9.2.2 Full-height sheathing in lowest story. In the lowest *story* of a *dwelling*, multiplying the percentage of full-height sheathing required in Table R603.9.2(1) by 0.6 shall be permitted provided hold-down anchors are provided in accordance with Section R603.9.4.2.

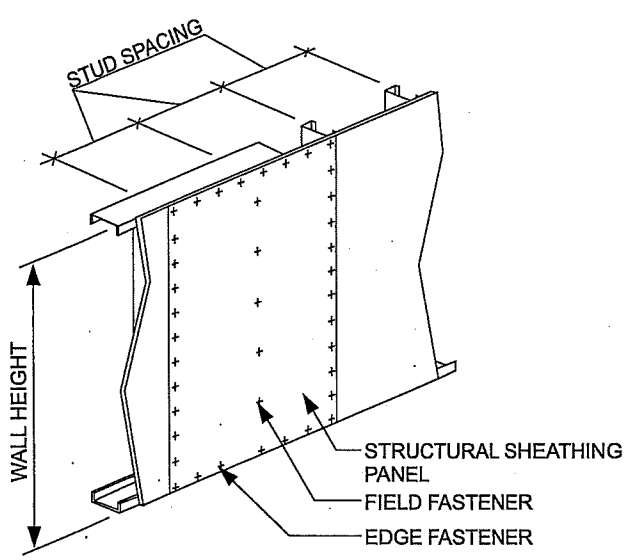

FIGURE R603.9
STRUCTURAL SHEATHING FASTENING PATTERN

R603.9.3 Structural sheathing fastening. Edges and interior areas of structural sheathing panels shall be fastened to framing members and tracks in accordance with Figure R603.9 and Table R603.3.2(1). Screws for attachment of structural sheathing panels shall be bugle-head, flat-head, or similar head style with a minimum head diameter of 0.29 inch (8 mm).

For continuously sheathed *braced wall lines* using wood structural panels installed with No. 8 screws spaced 4 inches (102 mm) on center at all panel edges and 12 inches (304.8 mm) on center on intermediate framing members, the following shall apply:

1. Multiplying the percentages of full-height sheathing in Table R603.9.2(1) by 0.72 shall be permitted.
2. For bottom track attached to foundations or framing below, the bottom track anchor or screw connection spacing in Tables R505.3.1(1) and R603.3.1 shall be multiplied by two-thirds

R603.9.4 Uplift connection requirements. Uplift connections shall be provided in accordance with this section.

R603.9.4.1 Ultimate design wind speeds greater than 126 mph. Where ultimate design wind speeds exceed 126 miles per hour (56 m/s), Exposure Category C walls shall be provided with direct uplift connections in accordance with AISI S230, Section E13.3, and AISI S230, Section F7.2, as required for 39 miles per hour (62 m/s), Exposure Category C.

R603.9.4.2 Hold-down anchor. Where the percentage of full-height sheathing is adjusted in accordance with Section R603.9.2.2, a hold-down anchor, with a strength of 4,300 pounds (19 kN), shall be provided at each end of each full-height sheathed wall section used to meet the minimum percent sheathing requirements of Section R603.9.2. Hold-down anchors shall be attached to back-to-back studs; structural sheathing panels shall have edge fastening to the studs, in accordance with Section R603.9.3 and AISI S230, Table E11-1.

A single hold-down anchor, installed in accordance with Figure R603.9.4.2, shall be permitted at the corners of buildings.

TABLE R603.9.2(1)
MINIMUM PERCENTAGE OF FULL-HEIGHT STRUCTURAL SHEATHING ON EXTERIOR WALLS[a, b]

WALL SUPPORTING	ROOF SLOPE	ULTIMATE WIND SPEED AND EXPOSURE (mph)				
		115 B	126 B / 110 C	< 139 B / 115 C	126 C	< 139 C
Roof and ceiling only (one story or top floor of two- or three-story building).	3:12	9	9	12	16	20
	6:12	13	15	20	26	35
	9:12	23	25	30	50	58
	12:12	33	35	40	66	75
One story, roof and ceiling (first floor of a two-story building or second floor of a three-story building).	3:12	27	30	35	50	66
	6:12	28	30	40	58	74
	9:12	38	40	55	74	91
	12:12	45	50	65	100	115
Two stories, roof and ceiling (first floor of a three-story building).	3:12	45	51	58	84	112
	6:12	43	45	60	90	113
	9:12	53	55	80	98	124
	12:12	57	65	90	134	155

For SI: 1 mph = 0.447 m/s.

a. Linear interpolation is permitted.

b. For hip-roofed homes the minimum percentage of full-height sheathing, based upon wind, is permitted to be multiplied by a factor of 0.95 for roof slopes not exceeding 7:12 and a factor of 0.9 for roof slopes greater than 7:12.

TABLE R603.9.2(2)
FULL-HEIGHT SHEATHING LENGTH ADJUSTMENT FACTORS

PLAN ASPECT RATIO	LENGTH ADJUSTMENT FACTORS	
	Short wall	Long wall
1:1	1.0	1.0
1.5:1	1.5	0.67
2:1	2.0	0.50
3:1	3.0	0.33
4:1	4.0	0.25

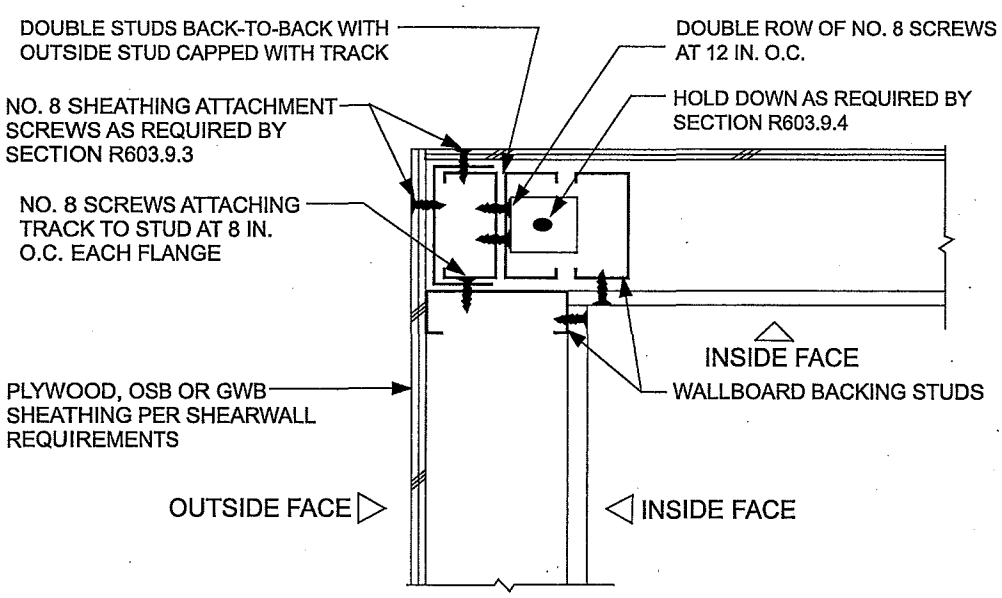

For SI: 1 inch = 25.4 mm.

FIGURE R603.9.4.2
CORNER STUD HOLD-DOWN DETAIL

R603.9.5 Structural sheathing for stone and masonry veneer. Where stone and masonry veneer are installed in accordance with Section R703.8, the length of full-height sheathing for exterior and interior wall lines backing or perpendicular to and laterally supporting walls with veneer shall comply with this section.

R603.9.5.1 Seismic Design Category C. In Seismic Design Category C, the length of structural sheathing for walls supporting one *story*, roof and ceiling shall be the greater of the amounts required by Section R603.9.2, except Section R603.9.2.2 shall be permitted.

R603.9.5.2 Seismic Design Categories D_0, D_1 and D_2. In Seismic Design Categories D_0, D_1 and D_2, the required length of structural sheathing and overturning anchorage shall be determined in accordance with Tables R603.9.5(1), R603.9.5(2), R603.9.5(3), and R603.9.5(4). Overturning anchorage shall be installed on the doubled studs at the end of each full-height wall segment.

TABLE R603.9.5(1)
REQUIRED LENGTH OF FULL-HEIGHT SHEATHING AND ASSOCIATED OVERTURNING ANCHORAGE FOR WALLS SUPPORTING WALLS WITH STONE OR MASONRY VENEER AND USING 33-MIL COLD-FORMED STEEL FRAMING AND 6-INCH SCREW SPACING ON THE PERIMETER OF EACH PANEL OF STRUCTURAL SHEATHING

SEISMIC DESIGN CATEGORY	STORY	BRACED WALL LINE LENGTH (feet)						SINGLE-STORY HOLD-DOWN FORCE (pounds)	CUMULATIVE HOLD-DOWN FORCE (pounds)
		10	20	30	40	50	60		
		Minimum total length of braced wall panels required along each braced wall line (feet)							
D_0	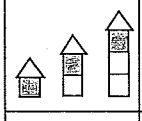	3.3	4.7	6.1	7.4	8.8	10.2	3,360	—
	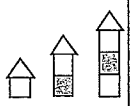	5.3	8.7	12.1	15.4	18.8	22.2	3,360	6,720
	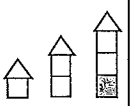	7.3	12.7	18.0	23.4	28.8	34.2	3,360	10,080
D_1	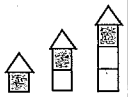	4.1	5.8	7.5	9.2	10.9	12.7	3,360	—
	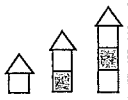	6.6	10.7	14.9	19.1	23.3	27.5	3,360	6,720
	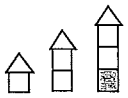	9.0	15.7	22.4	29.0	35.7	42.2	3,360	10,080
D_2	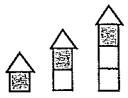	5.7	8.2	10.6	13.0	15.4	17.8	3,360	—
	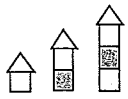	9.2	15.1	21.1	27.0	32.9	38.8	3,360	6,720
	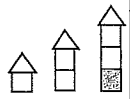	12.7	22.1	31.5	40.9	50.3	59.7	3,360	10,080

TABLE R603.9.5(2)
REQUIRED LENGTH OF FULL-HEIGHT SHEATHING AND ASSOCIATED OVERTURNING ANCHORAGE FOR WALLS SUPPORTING WALLS WITH STONE OR MASONRY VENEER AND USING 43-MIL COLD-FORMED STEEL FRAMING AND 6-INCH SCREW SPACING ON THE PERIMETER OF EACH PANEL OF STRUCTURAL SHEATHING

SEISMIC DESIGN CATEGORY	STORY	BRACED WALL LINE LENGTH (feet)						SINGLE-STORY HOLD-DOWN FORCE (pounds)	CUMULATIVE HOLD-DOWN FORCE (pounds)
		10	20	30	40	50	60		
		Minimum total length of braced wall panels required along each braced wall line (feet)							
D_0	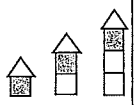	2.8	4.0	5.1	6.3	7.5	8.7	3,960	—
	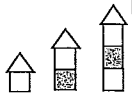	4.5	7.4	10.2	13.1	16.0	18.8	3,960	7,920
	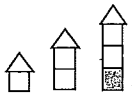	6.2	10.7	15.3	19.9	24.4	29.0	3,960	11, 880
D_1		3.5	4.9	6.4	7.8	9.3	10.7	3,960	—
	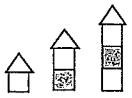	5.6	9.1	12.7	16.2	19.8	23.3	3,960	7,920
		7.7	13.3	19.0	24.6	30.3	35.9	3,960	11, 880
D_2		4.9	6.9	9.0	11.0	13.1	15.1	3,960	—
	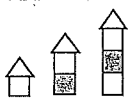	7.8	12.9	17.9	22.9	27.9	32.9	3,960	7,920
		10.8	18.8	26.7	34.7	42.7	50.7	3,960	11, 880

TABLE R603.9.5(3)
REQUIRED LENGTH OF FULL-HEIGHT SHEATHING AND ASSOCIATED OVERTURNING ANCHORAGE FOR WALLS SUPPORTING WALLS WITH STONE OR MASONRY VENEER AND USING 33-MIL COLD-FORMED STEEL FRAMING AND 4-INCH SCREW SPACING ON THE PERIMETER OF EACH PANEL OF STRUCTURAL SHEATHING

SEISMIC DESIGN CATEGORY	STORY	BRACED WALL LINE LENGTH (feet)						SINGLE-STORY HOLD-DOWN FORCE (pounds)	CUMULATIVE HOLD-DOWN FORCE (pounds)
		10	20	30	40	50	60		
		Minimum total length of braced wall panels required along each braced wall line (feet)							
D_0	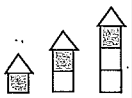	2.5	3.6	4.6	5.7	6.8	7.8	4,392	—
	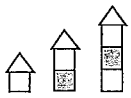	4.0	6.6	9.2	11.8	14.4	17.0	4,392	8,784
	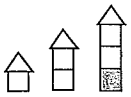	5.6	9.7	13.8	17.9	22.0	26.2	4,392	13,176
D_1		3.1	4.4	5.7	7.1	8.4	9.7	4,392	—
	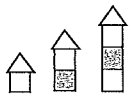	5.0	8.2	11.4	14.6	17.8	21.0	4,392	8,784
	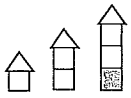	6.9	12.0	17.1	22.2	27.3	32.4	4,392	13,176
D_2	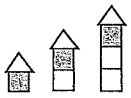	4.4	6.2	8.1	10.0	11.8	13.7	4,392	—
	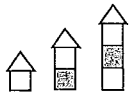	7.1	11.6	16.1	20.6	25.1	29.7	4,392	8,784
	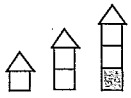	9.7	16.9	24.1	31.3	38.5	45.7	4,392	13,176

TABLE R603.9.5(4)
REQUIRED LENGTH OF FULL-HEIGHT SHEATHING AND ASSOCIATED OVERTURNING ANCHORAGE FOR WALLS SUPPORTING WALLS WITH STONE OR MASONRY VENEER AND USING 43-MIL COLD-FORMED STEEL FRAMING AND 4-INCH SCREW SPACING ON THE PERIMETER OF EACH PANEL OF STRUCTURAL SHEATHING

SEISMIC DESIGN CATEGORY	STORY	BRACED WALL LINE LENGTH (feet)						SINGLE-STORY HOLD-DOWN FORCE (pounds)	CUMULATIVE HOLD-DOWN FORCE (pounds)
		10	20	30	40	50	60		
		Minimum total length of braced wall panels required along each braced wall line (feet)							
D_0		1.9	2.7	3.4	4.2	5.0	5.8	5,928	—
		3.0	4.9	6.8	8.8	10.7	12.6	5,928	11,856
D_1		2.3	3.3	4.3	5.2	6.2	7.2	5,928	—
		3.7	6.1	8.5	10.8	13.2	15.6	5,928	11,856
D_2		3.3	4.6	6.0	7.4	8.7	10.1	5,928	—
		5.2	8.6	11.9	15.3	18.6	22.0	5,928	11,856

SECTION R604
WOOD STRUCTURAL PANELS

R604.1 Identification and grade. Wood structural panels shall conform to DOC PS 1, DOC PS 2 or ANSI/APA PRP 210, CSA O437 or CSA O325. Panels shall be identified by a grade mark or certificate of inspection issued by an *approved* agency.

R604.2 Allowable spans. The maximum allowable spans for wood structural panel wall sheathing shall not exceed the values set forth in Table R602.3(3).

R604.3 Installation. Wood structural panel wall sheathing shall be attached to framing in accordance with Table R602.3(1) or R602.3(3).

SECTION R605
PARTICLEBOARD

R605.1 Identification and grade. Particleboard shall conform to ANSI A208.1 and shall be so identified by a grade mark or certificate of inspection issued by an *approved* agency. Particleboard shall comply with the grades specified in Table R602.3(4).

SECTION R606
GENERAL MASONRY CONSTRUCTION

R606.1 General. Masonry construction shall be designed and constructed in accordance with the provisions of this section, TMS 403 or in accordance with the provisions of TMS 402/ACI 530/ASCE 5.

R606.1.1 Professional registration not required. When the empirical design provisions of Appendix A of TMS 402/ACI 530/ASCE 5, the provisions of TMS 403, or the provisions of this section are used to design masonry, project drawings, typical details and specifications are not required to bear the seal of the architect or engineer responsible for design, unless otherwise required by the state law of the *jurisdiction* having authority.

R606.2 Masonry construction materials.

R606.2.1 Concrete masonry units. Concrete masonry units shall conform to the following standards: ASTM C 55 for concrete brick; ASTM C 73 for calcium silicate face brick; ASTM C 90 for load-bearing concrete masonry units; ASTM C 744 for prefaced concrete and calcium silicate masonry units; or ASTM C 1634 for concrete facing brick.

R606.2.2 Clay or shale masonry units. Clay or shale masonry units shall conform to the following standards: ASTM C 34 for structural clay *load-bearing wall* tile; ASTM C 56 for structural clay nonload-bearing wall tile; ASTM C 62 for building brick (solid masonry units made from clay or shale); ASTM C 1088 for solid units of thin veneer brick; ASTM C 126 for ceramic-glazed structural clay facing tile, facing brick and solid masonry units; ASTM C 212 for structural clay facing tile; ASTM C 216 for facing brick (solid masonry units made from clay or

shale); ASTM C652 for hollow brick (hollow masonry units made from clay or shale); or ASTM C1405 for glazed brick (single-fired solid brick units).

Exception: Structural clay tile for nonstructural use in fireproofing of structural members and in wall furring shall not be required to meet the compressive strength specifications. The fire-resistance rating shall be determined in accordance with ASTM E 119 or UL 263 and shall comply with the requirements of Section R302.

R606.2.3 AAC masonry. AAC masonry units shall conform to ASTM C 1386 for the strength class specified.

R606.2.4 Stone masonry units. Stone masonry units shall conform to the following standards: ASTM C 503 for marble building stone (exterior); ASTM C 568 for limestone building stone; ASTM C 615 for granite building stone; ASTM C 616 for sandstone building stone; or ASTM C 629 for slate building stone.

R606.2.5 Architectural cast stone. Architectural cast stone shall conform to ASTM C 1364.

R606.2.6 Second hand units. Second hand masonry units shall not be reused unless they conform to the requirements of new units. The units shall be of whole, sound materials and free from cracks and other defects that will interfere with proper laying or use. Old mortar shall be cleaned from the unit before reuse.

R606.2.7 Mortar. Except for mortars listed in Sections R606.2.8, R606.2.9 and R606.2.10, mortar for use in masonry construction shall meet the proportion specifications of Table R606.2.7 or the property specifications of ASTM C 270. The type of mortar shall be in accordance with Sections R606.2.7.1, R606.2.7.2 and R606.2.7.3.

R606.2.7.1 Foundation walls. Mortar for masonry foundation walls constructed as set forth in Tables R404.1.1(1) through R404.1.1(4) shall be Type M or S mortar.

R606.2.7.2 Masonry in Seismic Design Categories A, B and C. Mortar for masonry serving as the lateral-force-resisting system in Seismic Design Categories A, B and C shall be Type M, S or N mortar.

R606.2.7.3 Masonry in Seismic Design Categories D_0, D_1 and D_2. Mortar for masonry serving as the lateral-force-resisting system in Seismic Design Categories D_0, D_1 and D_2 shall be Type M or S Portland cement-lime or mortar cement mortar.

R606.2.8 Surface-bonding mortar. Surface-bonding mortar shall comply with ASTM C 887. Surface bonding of concrete masonry units shall comply with ASTM C 946.

R606.2.9 Mortar for AAC masonry. Thin-bed mortar for AAC masonry shall comply with Article 2.1 C.1 of TMS 602/ACI 530.1/ASCE 6. Mortar used for the leveling courses of AAC masonry shall comply with Article 2.1 C.2 of TMS 602/ACI 530.1/ASCE 6.

R606.2.10 Mortar for adhered masonry veneer. Mortar for use with adhered masonry veneer shall conform to ASTM C 270 Type S or Type N or shall comply with ANSI A118.4 for latex-modified portland cement mortar.

TABLE R606.2.7
MORTAR PROPORTIONS[a, b]

		PROPORTIONS BY VOLUME (cementitious materials)								
MORTAR	TYPE	Portland cement or blended cement	Mortar cement			Masonry cement			Hydrated lime[c] or lime putty	Aggregate ratio (measured in damp, loose conditions)
			M	S	N	M	S	N		
Cement-lime	M	1	—	—	—	—	—	—	$^1/_4$	Not less than $2^1/_4$ and not more than 3 times the sum of separate volumes of lime, if used, and cement
	S	1	—	—	—	—	—	—	over $^1/_4$ to $^1/_2$	
	N	1	—	—	—	—	—	—	over $^1/_2$ to $1^1/_4$	
	O	1	—	—	—	—	—	—	over $1^1/_4$ to $2^1/_2$	
Mortar cement	M	1	—	—	1	—	—	—	—	
	M	—	1	—	—	—	—	—		
	S	$^1/_2$	—	—	1	—	—	—		
	S	—	—	1	—	—	—	—		
	N	—	—	—	1	—	—	—		
	O	—	—	—	1	—	—	—		
Masonry cement	M	1				—	—	1	—	
	M	—				1	—	—		
	S	$^1/_2$				—	—	1		
	S	—				—	1	—		
	N	—				—	—	1		
	O	—				—	—	1		

For SI: 1 cubic foot = 0.0283 m^3, 1 pound = 0.454 kg.

a. For the purpose of these specifications, the weight of 1 cubic foot of the respective materials shall be considered to be as follows:

Portland Cement	94 pounds	Masonry Cement	Weight printed on bag
Mortar Cement	Weight printed on bag	Hydrated Lime	40 pounds
Lime Putty (Quicklime)	80 pounds	Sand, damp and loose	80 pounds of dry sand

b. Two air-entraining materials shall not be combined in mortar.

c. Hydrated lime conforming to the requirements of ASTM C 207.

R606.2.11 Grout. Grout shall consist of cementitious material and aggregate in accordance with ASTM C 476 or the proportion specifications of Table R606.2.11. Type M or Type S mortar to which sufficient water has been added to produce pouring consistency shall be permitted to be used as grout.

R606.2.12 Metal reinforcement and accessories. Metal reinforcement and accessories shall conform to Article 2.4 of TMS 602/ACI 530.1/ASCE 6.

R606.3 Construction requirements.

R606.3.1 Bed and head joints. Unless otherwise required or indicated on the project drawings, head and bed joints shall be $^3/_8$ inch (9.5 mm) thick, except that the thickness of the bed joint of the starting course placed over foundations shall be not less than $^1/_4$ inch (6.4 mm) and not more than $^3/_4$ inch (19.1 mm). Mortar joint thickness for load-bearing masonry shall be within the following tolerances from the specified dimensions:

1. Bed joint: + $^1/_8$ inch (3.2 mm).
2. Head joint: - $^1/_4$ inch (6.4 mm), + $^3/_8$ inch (9.5 mm).
3. Collar joints: - $^1/_4$ inch (6.4 mm), + $^3/_8$ inch (9.5 mm).

R606.3.2 Masonry unit placement. The mortar shall be sufficiently plastic and units shall be placed with sufficient pressure to extrude mortar from the joint and produce a tight joint. Deep furrowing of bed joints that produces voids shall not be permitted. Any units disturbed to the extent that initial bond is broken after initial placement shall be removed and relaid in fresh mortar. Surfaces to be in contact with mortar shall be clean and free of deleterious materials.

R606.3.2.1 Solid masonry. *Solid masonry* units shall be laid with full head and bed joints and all interior vertical joints that are designed to receive mortar shall be filled.

R606.3.2.2 Hollow masonry. For hollow masonry units, head and bed joints shall be filled solidly with mortar for a distance in from the face of the unit not less than the thickness of the face shell.

R606.3.3 Installation of wall ties. The installation of wall ties shall be as follows:

1. The ends of wall ties shall be embedded in mortar joints. Wall ties shall have not less than $^5/_8$-inch (15.9 mm) mortar coverage from the exposed face.
2. Wall ties shall not be bent after being embedded in grout or mortar.
3. For solid masonry units, solid grouted hollow units, or hollow units in anchored masonry veneer, wall ties shall be embedded in mortar bed not less than $1^1/_2$ inches (38 mm).
4. For hollow masonry units in other than anchored masonry veneer, wall ties shall engage outer face shells by not less than $^1/_2$ inch (13 mm).

R606.3.4 Protection for reinforcement. Bars shall be completely embedded in mortar or grout. Joint reinforcement embedded in horizontal mortar joints shall not have less than $^5/_8$-inch (15.9 mm) mortar coverage from the exposed face. Other reinforcement shall have a minimum coverage of one bar diameter over all bars, but not less than $^3/_4$ inch (19 mm), except where exposed to weather or soil, in which case the minimum coverage shall be 2 inches (51 mm).

R606.3.4.1 Corrosion protection. Minimum corrosion protection of joint reinforcement, anchor ties and wire fabric for use in masonry wall construction shall conform to Table R606.3.4.1.

TABLE R606.3.4.1
MINIMUM CORROSION PROTECTION

MASONRY METAL ACCESSORY	STANDARD
Joint reinforcement, interior walls	ASTM A 641, Class 1
Wire ties or anchors in exterior walls completely embedded in mortar or grout	ASTM A 641, Class 3
Wire ties or anchors in exterior walls not completely embedded in mortar or grout	ASTM A 153, Class B-2
Joint reinforcement in exterior walls or interior walls exposed to moist environment	ASTM A 153, Class B-2
Sheet metal ties or anchors exposed to weather	ASTM A 153, Class B-2
Sheet metal ties or anchors completely embedded in mortar or grout	ASTM A 653, Coating Designation G60
Stainless steel hardware for any exposure	ASTM A 167, Type 304

R606.3.5 Grouting requirements.

R606.3.5.1 Grout placement. Grout shall be a plastic mix suitable for pumping without segregation of the constituents and shall be mixed thoroughly. Grout shall be placed by pumping or by an approved alternate method and shall be placed before any initial set occurs and not more than $1^1/_2$ hours after water has been added. Grout shall be consolidated by puddling or mechanical vibrating during placing and reconsolidated after excess moisture has been absorbed but before

TABLE R606.2.11
GROUT PROPORTIONS BY VOLUME FOR MASONRY CONSTRUCTION

TYPE	PORTLAND CEMENT OR BLENDED CEMENT SLAG CEMENT	HYDRATED LIME OR LIME PUTTY	AGGREGATE MEASURED IN A DAMP, LOOSE CONDITION	
			Fine	Coarse
Fine	1	0 to 1/10	$2^1/_4$ to 3 times the sum of the volume of the cementitious materials	—
Coarse	1	0 to 1/10	$2^1/_4$ to 3 times the sum of the volume of the cementitious materials	1 to 2 times the sum of the volumes of the cementitious materials

plasticity is lost. Grout shall not be pumped through aluminum pipes.

Maximum pour heights and the minimum dimensions of spaces provided for grout placement shall conform to Table R606.3.5.1. Grout shall be poured in lifts of 8-foot (2438 mm) maximum height. Where a total grout pour exceeds 8 feet (2438 mm) in height, the grout shall be placed in lifts not exceeding 64 inches (1626 mm) and special inspection during grouting shall be required. If the work is stopped for 1 hour or longer, the horizontal construction joints shall be formed by stopping all tiers at the same elevation and with the grout 1 inch (25 mm) below the top.

R606.3.5.2 Cleanouts. Provisions shall be made for cleaning the space to be grouted. Mortar that projects more than $^1/_2$ inch (12.7 mm) into the grout space and any other foreign matter shall be removed from the grout space prior to inspection and grouting. Where required by the building official, cleanouts shall be provided in the bottom course of masonry for each grout pour where the grout pour height exceeds 64 inches (1626 mm). In solid grouted masonry, cleanouts shall be spaced horizontally not more than 32 inches (813 mm) on center. The cleanouts shall be sealed before grouting and after inspection.

R606.3.5.3 Construction. Requirements for grouted masonry construction shall be as follows:

1. Masonry shall be built to preserve the unobstructed vertical continuity of the cells or spaces to be filled. In partially grouted construction, cross webs forming cells to be filled shall be full-bedded in mortar to prevent leakage of grout. Head and end joints shall be solidly filled with mortar for a distance in from the face of the wall or unit not less than the thickness of the longitudinal face shells.
2. Vertical reinforcement shall be held in position at top and bottom and at intervals not exceeding 200 diameters of the reinforcement.
3. Cells containing reinforcement shall be filled solidly with grout.
4. The thickness of grout or mortar between masonry units and reinforcement shall be not less than $^1/_4$ inch (6.4 mm), except that $^1/_4$-inch (6.4 mm) bars shall be permitted to be laid in horizontal mortar joints not less than $^1/_2$ inch (12.7 mm) thick, and steel wire reinforcement shall be permitted to be laid in horizontal mortar joints not less than twice the thickness of the wire diameter.

R606.3.6 Grouted multiple-wythe masonry. Grouted multiple-wythe masonry shall conform to all the requirements specified in Section R606.3.5 and the requirements of this section.

R606.3.6.1 Bonding of backup wythe. Where all interior vertical spaces are filled with grout in multiple-wythe construction, masonry headers shall not be permitted. Metal wall ties shall be used in accordance with Section R606.13.2 to prevent spreading of the wythes and to maintain the vertical alignment of the wall. Wall ties shall be installed in accordance with Section R606.13.2 where the backup wythe in multiple-wythe construction is fully grouted.

R606.3.6.2 Grout barriers. Vertical grout barriers or dams shall be built of *solid masonry* across the grout space the entire height of the wall to control the flow of the grout horizontally. Grout barriers shall be not more than 25 feet (7620 mm) apart. The grouting of any section of a wall between control barriers shall be completed in one day without interruptions greater than 1 hour.

R606.3.7 Masonry bonding pattern. Masonry laid in running and stack bond shall conform to Sections R606.3.7.1 and R606.3.7.2.

R606.3.7.1 Masonry laid in running bond. In each wythe of masonry laid in running bond, head joints in successive courses shall be offset by not less than one-fourth the unit length, or the masonry walls shall be reinforced longitudinally as required in Section R606.3.7.2.

TABLE R606.3.5.1
GROUT SPACE DIMENSIONS AND POUR HEIGHTS

GROUT TYPE	GROUT POUR MAXIMUM HEIGHT (feet)	MINIMUM WIDTH OF GROUT SPACES[a, b] (inches)	MINIMUM GROUT[b, c] SPACE DIMENSIONS FOR GROUTING CELLS OF HOLLOW UNITS (inches × inches)
Fine	1	0.75	1.5 × 2
	5	2	2 × 3
	12	2.5	2.5 × 3
	24	3	3 × 3
Coarse	1	1.5	1.5 × 3
	5	2	2.5 × 3
	12	2.5	3 × 3
	24	3	3 × 4

For SI: 1 inch = 25.4 mm, 1 foot = 304.8 mm.

a. For grouting between masonry wythes.

b. Grout space dimension is the clear dimension between any masonry protrusion and shall be increased by the horizontal projection of the diameters of the horizontal bars within the cross section of the grout space.

c. Area of vertical reinforcement shall not exceed 6 percent of the area of the grout space.

R606.3.7.2 Masonry laid in stack bond. Where unit masonry is laid with less head joint offset than in Section R606.3.7.1, the minimum area of horizontal reinforcement placed in mortar bed joints or in bond beams spaced not more than 48 inches (1219 mm) apart shall be 0.0007 times the vertical cross-sectional area of the wall.

R606.4 Thickness of masonry. The nominal thickness of masonry walls shall conform to the requirements of Sections R606.4.1 through R606.4.4.

R606.4.1 Minimum thickness. The minimum thickness of masonry bearing walls more than one story high shall be 8 inches (203 mm). *Solid masonry* walls of one-story dwellings and garages shall be not less than 6 inches (152 mm) in thickness where not greater than 9 feet (2743 mm) in height, provided that where gable construction is used, an additional 6 feet (1829 mm) is permitted to the peak of the gable. Masonry walls shall be laterally supported in either the horizontal or vertical direction at intervals as required by Section R606.6.4.

R606.4.2 Rubble stone masonry wall. The minimum thickness of rough, random or coursed rubble stone masonry walls shall be 16 inches (406 mm).

R606.4.3 Change in thickness. Where walls of masonry of hollow units or masonry-bonded hollow walls are decreased in thickness, a course of solid masonry or masonry units filled with mortar or grout shall be constructed between the wall below and the thinner wall above, or special units or construction shall be used to transmit the loads from face shells or wythes above to those below.

R606.4.4 Parapet walls. Unreinforced solid masonry parapet walls shall be not less than 8 inches (203 mm) thick and their height shall not exceed four times their thickness. Unreinforced hollow unit masonry parapet walls shall be not less than 8 inches (203 mm) thick, and their height shall not exceed three times their thickness. Masonry parapet walls in areas subject to wind loads of 30 pounds per square foot (1.44 kPa) located in Seismic Design Category D_0, D_1 or D_2, or on townhouses in Seismic Design Category C shall be reinforced in accordance with Section R606.12.

R606.5 Corbeled masonry. Corbeled masonry shall be in accordance with Sections R606.5.1 through R606.5.3.

R606.5.1 Units. *Solid masonry* units or masonry units filled with mortar or grout shall be used for corbeling.

R606.5.2 Corbel projection. The maximum projection of one unit shall not exceed one-half the height of the unit or one-third the thickness at right angles to the wall. The maximum corbeled projection beyond the face of the wall shall not exceed:

1. One-half of the wall thickness for multiwythe walls bonded by mortar or grout and wall ties or masonry headers.
2. One-half the wythe thickness for single wythe walls, masonry-bonded hollow walls, multiwythe walls with open collar joints and veneer walls.

R606.5.3 Corbeled masonry supporting floor or roof-framing members. Where corbeled masonry is used to support floor or roof-framing members, the top course of the corbel shall be a header course or the top course bed joint shall have ties to the vertical wall.

R606.6 Support conditions. Bearing and support conditions shall be in accordance with Sections R606.6.1 through R606.6.4.

R606.6.1 Bearing on support. Each masonry wythe shall be supported by at least two-thirds of the wythe thickness.

R606.6.2 Support at foundation. Cavity wall or masonry veneer construction shall be permitted to be supported on an 8-inch (203 mm) foundation wall, provided the 8-inch (203 mm) wall is corbeled to the width of the wall system above with masonry constructed of solid masonry units or masonry units filled with mortar or grout. The total horizontal projection of the corbel shall not exceed 2 inches (51 mm) with individual corbels projecting not more than one-third the thickness of the unit or one-half the height of the unit. The hollow space behind the corbeled masonry shall be filled with mortar or grout.

R606.6.3 Beam supports. Beams, girders or other concentrated loads supported by a wall or column shall have a bearing of not less than 3 inches (76 mm) in length measured parallel to the beam upon *solid masonry* not less than 4 inches (102 mm) in thickness, or upon a metal bearing plate of adequate design and dimensions to distribute the load safely, or upon a continuous reinforced masonry member projecting not less than 4 inches (102 mm) from the face of the wall.

R606.6.3.1 Joist bearing. Joists shall have a bearing of not less than $1^1/_2$ inches (38 mm), except as provided in Section R606.6.3, and shall be supported in accordance with Figure R606.11(1).

R606.6.4 Lateral support. Masonry walls shall be laterally supported in either the horizontal or the vertical direction. The maximum spacing between lateral supports shall not exceed the distances in Table R606.6.4. Lateral support shall be provided by cross walls, pilasters, buttresses or structural frame members where the limiting distance is taken horizontally, or by floors or roofs where the limiting distance is taken vertically.

TABLE R606.6.4
SPACING OF LATERAL SUPPORT FOR MASONRY WALLS

CONSTRUCTION	MAXIMUM WALL LENGTH TO THICKNESS OR WALL HEIGHT TO THICKNESS[a, b]
Bearing walls:	
Solid or solid grouted	20
All other	18
Nonbearing walls:	
Exterior	18
Interior	36

For SI: 1 foot = 304.8 mm.

a. Except for cavity walls and cantilevered walls, the thickness of a wall shall be its nominal thickness measured perpendicular to the face of the wall. For cavity walls, the thickness shall be determined as the sum of the nominal thicknesses of the individual wythes. For cantilever walls, except for parapets, the ratio of height to nominal thickness shall not exceed 6 for solid masonry, or 4 for hollow masonry. For parapets, see Section R606.4.4.

b. An additional unsupported height of 6 feet is permitted for gable end walls.

R606.6.4.1 Horizontal lateral support. Lateral support in the horizontal direction provided by intersecting masonry walls shall be provided by one of the methods in Section R606.6.4.1.1 or R606.6.4.1.2.

R606.6.4.1.1 Bonding pattern. Fifty percent of the units at the intersection shall be laid in an overlapping masonry bonding pattern, with alternate units having a bearing of not less than 3 inches (76 mm) on the unit below.

R606.6.4.1.2 Metal reinforcement. Interior nonload- bearing walls shall be anchored at their intersections, at vertical intervals of not more than 16 inches (406 mm) with joint reinforcement of not less than 9 gage [0.148 inch (4mm)], or $^1/_4$-inch (6 mm) galvanized mesh hardware cloth. Intersecting masonry walls, other than interior nonloadbearing walls, shall be anchored at vertical intervals of not more than 8 inches (203 mm) with joint reinforcement of not less than 9 gage and shall extend not less than 30 inches (762 mm) in each direction at the intersection. Other metal ties, joint reinforcement or anchors, if used, shall be spaced to provide equivalent area of anchorage to that required by this section.

R606.6.4.2 Vertical lateral support. Vertical lateral support of masonry walls in Seismic Design Category A, B or C shall be provided in accordance with one of the methods in Section R606.6.4.2.1 or R606.6.4.2.2.

R606.6.4.2.1 Roof structures. Masonry walls shall be anchored to roof structures with metal strap anchors spaced in accordance with the manufacturer's instructions, $^1/_2$-inch (13 mm) bolts spaced not more than 6 feet (1829 mm) on center, or other *approved* anchors. Anchors shall be embedded not less than 16 inches (406 mm) into the masonry, or be hooked or welded to bond beam reinforcement placed not less than 6 inches (152 mm) from the top of the wall.

R606.6.4.2.2 Floor diaphragms. Masonry walls shall be anchored to floor *diaphragm* framing by metal strap anchors spaced in accordance with the manufacturer's instructions, $^1/_2$-inch-diameter (13 mm) bolts spaced at intervals not to exceed 6 feet (1829 mm) and installed as shown in Figure R606.11(1), or by other *approved* methods.

R606.7 Piers. The unsupported height of masonry piers shall not exceed 10 times their least dimension. Where structural clay tile or hollow concrete masonry units are used for isolated piers to support beams and girders, the cellular spaces shall be filled solidly with grout or Type M or S mortar, except that unfilled hollow piers shall be permitted to be used if their unsupported height is not more than four times their least dimension. Where hollow masonry units are solidly filled with grout or Type M, S or N mortar, the allowable compressive stress shall be permitted to be increased as provided in Table R606.9.

R606.7.1 Pier cap. Hollow piers shall be capped with 4 inches (102 mm) of *solid masonry* or concrete, a masonry cap block, or shall have cavities of the top course filled with concrete or grout.

R606.8 Chases. Chases and recesses in masonry walls shall not be deeper than one-third the wall thickness, and the maximum length of a horizontal chase or horizontal projection shall not exceed 4 feet (1219 mm), and shall have not less than 8 inches (203 mm) of masonry in back of the chases and recesses and between adjacent chases or recesses and the jambs of openings. Chases and recesses in masonry walls shall be designed and constructed so as not to reduce the required strength or required fire resistance of the wall and in no case shall a chase or recess be permitted within the required area of a pier. Masonry directly above chases or recesses wider than 12 inches (305 mm) shall be supported on noncombustible lintels.

R606.9 Allowable stresses. Allowable compressive stresses in masonry shall not exceed the values prescribed in Table R606.9. In determining the stresses in masonry, the effects of all loads and conditions of loading and the influence of all forces affecting the design and strength of the several parts shall be taken into account.

R606.9.1 Combined units. In walls or other structural members composed of different kinds or grades of units, materials or mortars, the maximum stress shall not exceed the allowable stress for the weakest of the combination of units, materials and mortars of which the member is composed. The net thickness of any facing unit that is used to resist stress shall be not less than $1^1/_2$ inches (38 mm).

R606.10 Lintels. Masonry over openings shall be supported by steel lintels, reinforced concrete or masonry lintels or masonry arches, designed to support load imposed.

R606.11 Anchorage. Masonry walls shall be anchored to floor and roof systems in accordance with the details shown in Figure R606.11(1), R606.11(2) or R606.11(3). Footings shall be permitted to be considered as points of lateral support.

R606.12 Seismic requirements. The seismic requirements of this section shall apply to the design of masonry and the construction of masonry building elements located in Seismic Design Category D_0, D_1 or D_2. Townhouses in Seismic Design Category C shall comply with the requirements of Section R606.12.2. These requirements shall not apply to glass unit masonry conforming to Section R610, anchored masonry veneer conforming to Section R703.8 or adhered masonry veneer conforming to Section R703.12.

R606.12.1 General. Masonry structures and masonry elements shall comply with the requirements of Sections R606.12.2 through R606.12.4 based on the seismic design category established in Table R301.2(1). Masonry structures and masonry elements shall comply with the requirements of Section R606.12 and Figures R606.11(1), R606.11(2) and R606.11(3) or shall be designed in accordance with TMS 402/ACI 530/ASCE 5 or TMS 403.

R606.12.1.1 Floor and roof diaphragm construction. Floor and roof *diaphragms* shall be constructed of wood structural panels attached to wood framing in accordance with Table R602.3(1) or to cold-formed steel floor framing in accordance with Table R505.3.1(2) or to cold-formed steel roof framing in accordance with Table R804.3. Additionally, sheathing panel edges perpendicular to framing members shall be backed by blocking, and sheathing shall be connected to the blocking with

fasteners at the edge spacing. For Seismic Design Categories C, D_0, D_1 and D_2, where the width-to-thickness dimension of the *diaphragm* exceeds 2-to-1, edge spacing of fasteners shall be 4 inches (102 mm) on center.

TABLE R606.9
ALLOWABLE COMPRESSIVE STRESSES FOR EMPIRICAL DESIGN OF MASONRY

CONSTRUCTION; COMPRESSIVE STRENGTH OF UNIT, GROSS AREA	ALLOWABLE COMPRESSIVE STRESSES[a] GROSS CROSS-SECTIONAL AREA[b]	
	Type M or S mortar	Type N mortar
Solid masonry of brick and other solid units of clay or shale; sand-lime or concrete brick:		
8,000 + psi	350	300
4,500 psi	225	200
2,500 psi	160	140
1,500 psi	115	100
Grouted[c] masonry, of clay or shale; sand-lime or concrete:		
4,500 + psi	225	200
2,500 psi	160	140
1,500 psi	115	100
Solid masonry of solid concrete masonry units:		
3,000 + psi	225	200
2,000 psi	160	140
1,200 psi	115	100
Masonry of hollow load-bearing units:		
2,000 + psi	140	120
1,500 psi	115	100
1,000 psi	75	70
700 psi	60	55
Hollow walls (cavity or masonry bonded[d]) solid units:		
2,500 + psi	160	140
1,500 psi	115	100
Hollow units	75	70
Stone ashlar masonry:		
Granite	720	640
Limestone or marble	450	400
Sandstone or cast stone	360	320
Rubble stone masonry:		
Coarse, rough or random	120	100

For SI: 1 pound per square inch = 6.895 kPa.

a. Linear interpolation shall be used for determining allowable stresses for masonry units having compressive strengths that are intermediate between those given in the table.

b. Gross cross-sectional area shall be calculated on the actual rather than nominal dimensions.

c. See Section R606.13.

d. Where floor and roof loads are carried upon one wythe, the gross cross-sectional area is that of the wythe under load; if both wythes are loaded, the gross cross-sectional area is that of the wall minus the area of the cavity between the wythes. Walls bonded with metal ties shall be considered as cavity walls unless the collar joints are filled with mortar or grout.

R606.12.2 Seismic Design Category C. Townhouses located in Seismic Design Category C shall comply with the requirements of this section.

R606.12.2.1 Minimum length of wall without openings. Table R606.12.2.1 shall be used to determine the minimum required solid wall length without openings at each masonry exterior wall. The provided percentage of solid wall length shall include only those wall segments that are 3 feet (914 mm) or longer. The maximum clear distance between wall segments included in determining the solid wall length shall not exceed 18 feet (5486 mm). Shear wall segments required to meet the minimum wall length shall be in accordance with Section R606.12.2.2.3.

R606.12.2.2 Design of elements not part of the lateral force-resisting system.

R606.12.2.2.1 Load-bearing frames or columns. Elements not part of the lateral force-resisting system shall be analyzed to determine their effect on the response of the system. The frames or columns shall be adequate for vertical load carrying capacity and induced moment caused by the design *story* drift.

R606.12.2.2.2 Masonry partition walls. Masonry partition walls, masonry screen walls and other masonry elements that are not designed to resist vertical or lateral loads, other than those induced by their own weight, shall be isolated from the structure so that vertical and lateral forces are not imparted to these elements. Isolation joints and connectors between these elements and the structure shall be designed to accommodate the design *story* drift.

R606.12.2.2.3 Reinforcement requirements for masonry elements. Masonry elements listed in Section R606.12.2.2.2 shall be reinforced in either the horizontal or vertical direction as shown in Figure R606.11(2) and in accordance with the following:

1. Horizontal reinforcement. Horizontal joint reinforcement shall consist of not less than two longitudinal W1.7 wires spaced not more than 16 inches (406 mm) for walls greater than 4 inches (102 mm) in width and not less than one longitudinal W1.7 wire spaced not more than 16 inches (406 mm) for walls not exceeding 4 inches (102 mm) in width; or not less than one No. 4 bar spaced not more than 48 inches (1219 mm). Where two longitudinal wires of joint reinforcement are used, the space between these wires shall be the widest that the mortar joint will accommodate. Horizontal reinforcement shall be provided within 16 inches (406 mm) of the top and bottom of these masonry elements.

2. Vertical reinforcement. Vertical reinforcement shall consist of not less than one No. 4 bar spaced not more than 48 inches (1219 mm). Vertical reinforcement shall be located within 16 inches (406 mm) of the ends of masonry walls.

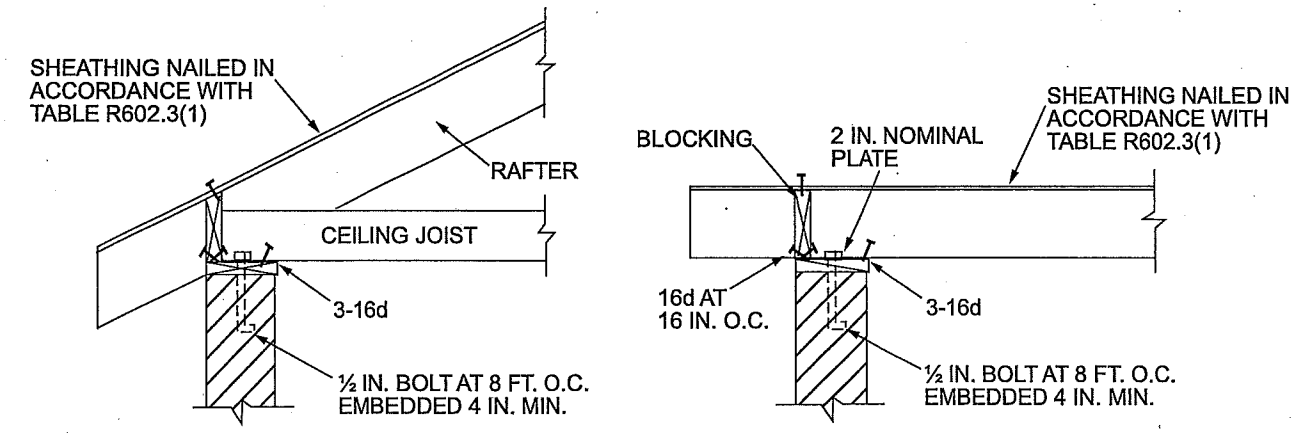

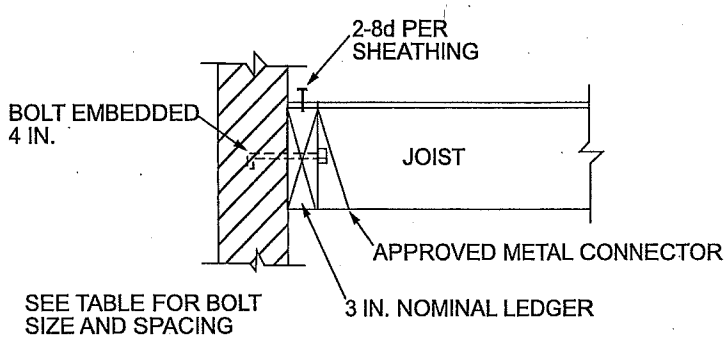

LEDGER BOLT SIZE AND SPACING

JOIST SPAN	BOLT SIZE AND SPACING	
	ROOF	FLOOR
10 FT.	$^1/_2$ AT 2 FT. 6 IN. $^7/_8$ AT 3 FT. 6 IN.	$^1/_2$ AT 2 FT. 0 IN. $^7/_8$ AT 2 FT. 9 IN.
10—15 FT.	$^1/_2$ AT 1 FT. 9 IN. $^7/_8$ AT 2 FT. 6 IN.	$^1/_2$ AT 1 FT. 4 IN. $^7/_8$ AT 2 FT. 0 IN.
15—20 FT.	$^1/_2$ AT 1 FT. 3 IN. $^7/_8$ AT 2 FT. 0 IN.	$^1/_2$ AT 1 FT. 0 IN. $^7/_8$ AT 1 FT. 6 IN.

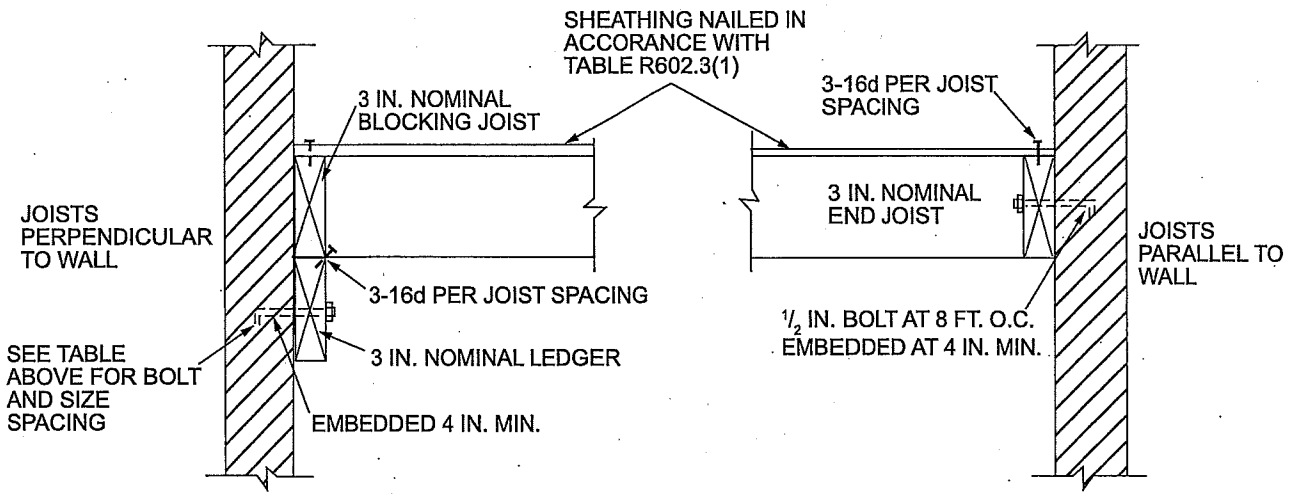

For SI: 1 inch = 25.4 mm, 1 foot = 304.8 mm, 1 pound per square foot = 0.0.479 kPa.

Note: Where bolts are located in hollow masonry, the cells in the courses receiving the bolt shall be grouted solid.

FIGURE R606.11(1)
ANCHORAGE REQUIREMENTS FOR MASONRY WALLS LOCATED IN SEISMIC DESIGN CATEGORY A, B OR C AND WHERE WIND LOADS ARE LESS THAN 30 PSF

2717

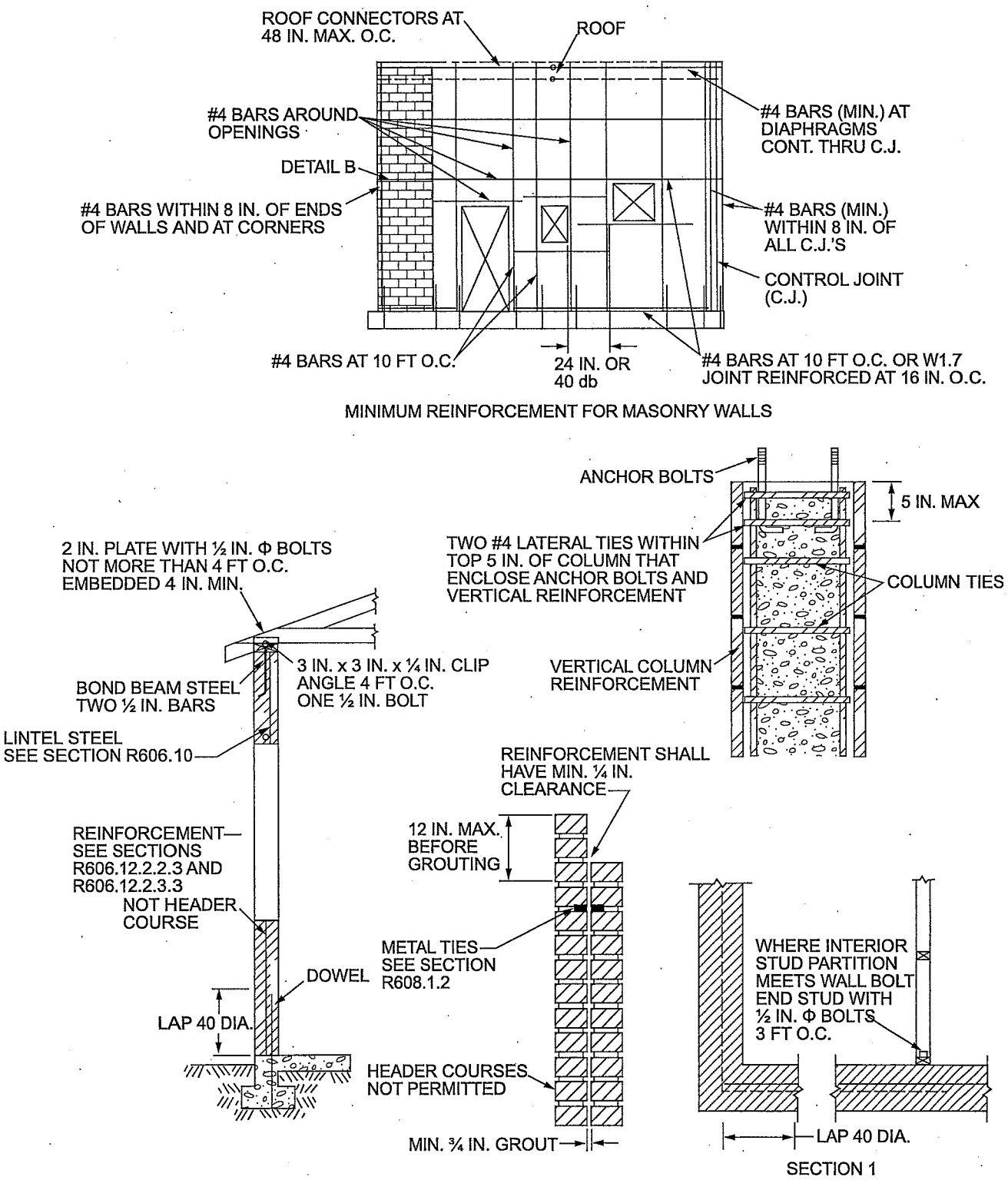

For SI: 1 inch = 25.4 mm, 1 foot = 304.8 mm.

FIGURE R606.11(2)
REQUIREMENTS FOR REINFORCED GROUTED MASONRY CONSTRUCTION IN SEISMIC DESIGN CATEGORY C

2718

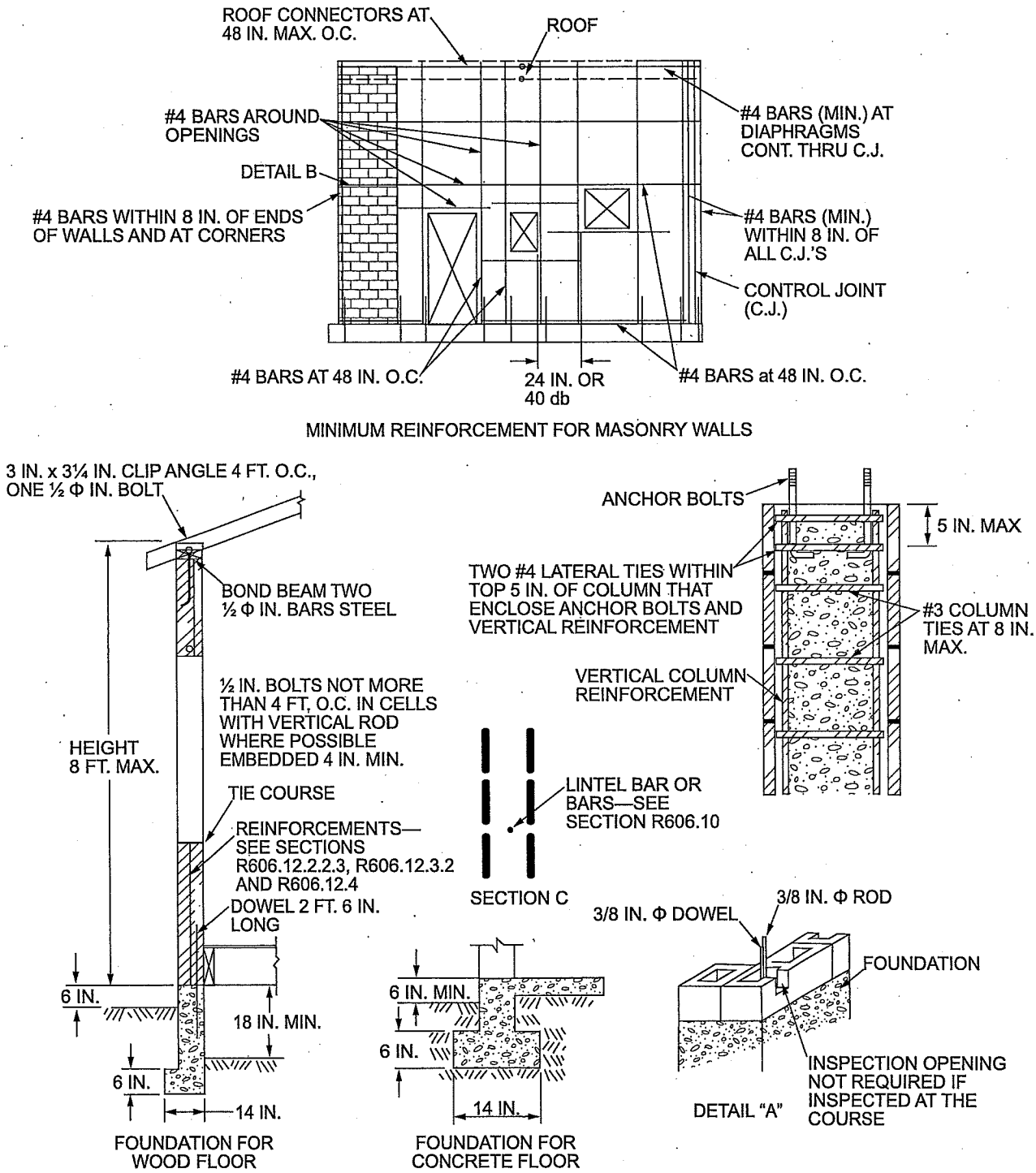

For SI: 1 inch = 25.4 mm, 1 foot = 304.8 mm.

Note: A full bed joint must be provided. Cells containing vertical bars are to be filled to the top of wall and provide inspection opening as shown on detail "A." Horizontal bars are to be laid as shown on detail "B." Lintel bars are to be laid as shown on Section C.

FIGURE R606.11(3)
REQUIREMENTS FOR REINFORCED MASONRY CONSTRUCTION IN SEISMIC DESIGN CATEGORY D_0, D_1 OR D_2

TABLE R606.12.2.1
MINIMUM SOLID WALL LENGTH ALONG EXTERIOR WALL LINES

SESIMIC DESIGN CATEGORY	MINIMUM SOLID WALL LENGTH (percent)[a]		
	One story or top story of two story	Wall supporting light-framed second story and roof	Wall supporting masonry second story and roof
Townhouses in C	20	25	35
D_0 or D_1	25	NP	NP
D_2	30	NP	NP

NP = Not permitted, except with design in accordance with the *International Building Code*.

a. For all walls, the minimum required length of solid walls shall be based on the table percent multiplied by the dimension, parallel to the wall direction under consideration, of a rectangle inscribing the overall building plan.

R606.12.2.3 Design of elements part of the lateral force-resisting system.

R606.12.2.3.1 Connections to masonry shear walls. Connectors shall be provided to transfer forces between masonry walls and horizontal elements in accordance with the requirements of Section 4.1.4 of TMS 402/ACI 530/ASCE 5. Connectors shall be designed to transfer horizontal design forces acting either perpendicular or parallel to the wall, but not less than 200 pounds per linear foot (2919 N/m) of wall. The maximum spacing between connectors shall be 4 feet (1219 mm). Such anchorage mechanisms shall not induce tension stresses perpendicular to grain in ledgers or nailers.

R606.12.2.3.2 Connections to masonry columns. Connectors shall be provided to transfer forces between masonry columns and horizontal elements in accordance with the requirements of Section 4.1.4 of TMS 402/ACI 530/ASCE 5. Where anchor bolts are used to connect horizontal elements to the tops of columns, the bolts shall be placed within lateral ties. Lateral ties shall enclose both the vertical bars in the column and the anchor bolts. There shall be not less than two No. 4 lateral ties provided in the top 5 inches (127 mm) of the column.

R606.12.2.3.3 Minimum reinforcement requirements for masonry shear walls. Vertical reinforcement of not less than one No. 4 bar shall be provided at corners, within 16 inches (406 mm) of each side of openings, within 8 inches (203 mm) of each side of movement joints, within 8 inches (203 mm) of the ends of walls, and at a maximum spacing of 10 feet (3048 mm).

Horizontal joint reinforcement shall consist of not less than two wires of W1.7 spaced not more than 16 inches (406 mm); or bond beam reinforcement of not less than one No. 4 bar spaced not more than 10 feet (3048 mm) shall be provided. Horizontal reinforcement shall be provided at the bottom and top of wall openings and shall extend not less than 24 inches (610 mm) nor less than 40 bar diameters past the opening; continuously at structurally connected roof and floor levels; and within 16 inches (406 mm) of the top of walls.

R606.12.3 Seismic Design Category D_0 or D_1. Structures in Seismic Design Category D_0 or D_1 shall comply with the requirements of Seismic Design Category C and the additional requirements of this section. AAC masonry shall not be used for the design of masonry elements that are part of the lateral force-resisting system.

R606.12.3.1 Design requirements. Masonry elements other than those covered by Section R606.12.2.2.2 shall be designed in accordance with the requirements of Chapters 1 through 7 and Sections 8.1 and 8.3 of TMS 402, ACI 530/ASCE 5 and shall meet the minimum reinforcement requirements contained in Sections R606.12.3.2 and R606.12.3.2.1. Otherwise, masonry shall be designed in accordance with TMS 403.

Exception: Masonry walls limited to one *story* in height and 9 feet (2743 mm) between lateral supports need not be designed provided they comply with the minimum reinforcement requirements of Sections R606.12.3.2 and R606.12.3.2.1.

R606.12.3.2 Minimum reinforcement requirements for masonry walls. Masonry walls other than those covered by Section R606.12.2.2.3 shall be reinforced in both the vertical and horizontal direction. The sum of the cross-sectional area of horizontal and vertical reinforcement shall be not less than 0.002 times the gross cross-sectional area of the wall, and the minimum cross-sectional area in each direction shall be not less than 0.0007 times the gross cross-sectional area of the wall. Reinforcement shall be uniformly distributed. Table R606.12.3.2 shows the minimum reinforcing bar sizes required for varying thicknesses of masonry walls. The maximum spacing of reinforcement shall be 48 inches (1219 mm) provided that the walls are solid grouted and constructed of hollow open-end units, hollow units laid with full head joints or two wythes of solid units. The maximum spacing of reinforcement shall be 24 inches (610 mm) for all other masonry.

R606.12.3.2.1 Shear wall reinforcement requirements. The maximum spacing of vertical and horizontal reinforcement shall be the smaller of one-third the length of the shear wall, one-third the height of the shear wall, or 48 inches (1219 mm). The minimum cross-sectional area of vertical reinforcement shall be one-third of the required shear reinforcement. Shear reinforcement shall be anchored around vertical reinforcing bars with a standard hook.

2720

TABLE R606.12.3.2
MINIMUM DISTRIBUTED WALL REINFORCEMENT FOR BUILDINGS ASSIGNED TO SEISMIC DESIGN CATEGORY D_0 or D_1

NOMINAL WALL THICKNESS (inches)	MINIMUM SUM OF THE VERTICAL AND HORIZONTAL REINFORCEMENT AREAS[a] (square inches per foot)	MINIMUM REINFORCEMENT AS DISTRIBUTED IN BOTH HORIZONTAL AND VERTICAL DIRECTIONS[b] (square inches per foot)	MINUMUM BAR SIZE FOR REINFORCEMENT SPACED AT 48 INCHES
6	0.135	0.047	#4
8	0.183	0.064	#5
10	0.231	0.081	#6
12	0.279	0.098	#6

For SI: 1 inch = 25.4 mm, 1 foot = 304.8 mm, 1 square inch per foot = 2064 mm^2/m.

a. Based on the minimum reinforcing ratio of 0.002 times the gross cross-sectional area of the wall.

b. Based on the minimum reinforcing ratio each direction of 0.0007 times the gross cross-sectional area of the wall.

R606.12.3.3 Minimum reinforcement for masonry columns. Lateral ties in masonry columns shall be spaced not more than 8 inches (203 mm) on center and shall be not less than $^3/_8$-inch (9.5 mm) diameter. Lateral ties shall be embedded in grout.

R606.12.3.4 Material restrictions. Type N mortar or masonry cement shall not be used as part of the lateral force-resisting system.

R606.12.3.5 Lateral tie anchorage. Standard hooks for lateral tie anchorage shall be either a 135-degree (2.4 rad) standard hook or a 180-degree (3.2 rad) standard hook.

R606.12.4 Seismic Design Category D_2. Structures in Seismic Design Category D_2 shall comply with the requirements of Seismic Design Category D_1 and to the additional requirements of this section.

R606.12.4.1 Design of elements not part of the lateral force-resisting system. Stack bond masonry that is not part of the lateral force-resisting system shall have a horizontal cross-sectional area of reinforcement of not less than 0.0015 times the gross cross-sectional area of masonry. Table R606.12.4.1 shows minimum reinforcing bar sizes for masonry walls. The maximum spacing of horizontal reinforcement shall be 24 inches (610 mm). These elements shall be solidly grouted and shall be constructed of hollow open-end units or two wythes of solid units.

TABLE R606.12.4.1
MINIMUM REINFORCING FOR STACKED BONDED MASONRY WALLS IN SEISMIC DESIGN CATEGORY D_2

NOMINAL WALL THICKNESS (inches)	MINIMUM BAR SIZE SPACED AT 24 INCHES
6	#4
8	#5
10	#5
12	#6

For SI: 1 inch = 25.4 mm.

R606.12.4.2 Design of elements part of the lateral force-resisting system. Stack bond masonry that is part of the lateral force-resisting system shall have a horizontal cross-sectional area of reinforcement of not less than 0.0025 times the gross cross-sectional area of masonry. Table R606.12.4.2 shows minimum reinforcing bar sizes for masonry walls. The maximum spacing of horizontal reinforcement shall be 16 inches (406 mm). These elements shall be solidly grouted and shall be constructed of hollow open-end units or two wythes of solid units.

TABLE R606.12.4.2
MINIMUM REINFORCING FOR STACKED BONDED MASONRY WALLS IN SEISMIC DESIGN CATEGORY D_2

NOMINAL WALL THICKNESS (inches)	MINIMUM BAR SIZE SPACED AT 16 INCHES
6	#4
8	#5
10	#5
12	#6

For SI: 1 inch = 25.4 mm.

R606.13 Multiple-wythe masonry. The facing and backing of multiple-wythe masonry walls shall be bonded in accordance with Section R606.13.1, R606.13.2 or R606.13.3. In cavity walls, neither the facing nor the backing shall be less than 3 inches (76 mm) nominal in thickness and the cavity shall be not more than 4 inches (102 mm) nominal in width. The backing shall be not less than as thick as the facing.

Exception: Cavities shall be permitted to exceed the 4-inch (102 mm) nominal dimension provided tie size and tie spacing have been established by calculation.

R606.13.1 Bonding with masonry headers. Bonding with solid or hollow masonry headers shall comply with Sections R606.13.1.1 and R606.13.1.2.

R606.13.1.1 Solid units. Where the facing and backing (adjacent wythes) of *solid masonry* construction are bonded by means of masonry headers, not less than 4 percent of the wall surface of each face shall be composed of headers extending not less than 3 inches (76 mm) into the backing. The distance between adjacent full-length headers shall not exceed 24 inches (610 mm) either vertically or horizontally. In walls in which a single header does not extend through the wall, headers from the opposite sides shall overlap not less than 3 inches (76 mm), or headers from opposite sides shall be covered with another header course overlapping the header below not less than 3 inches (76 mm).

R606.13.1.2 Hollow units. Where two or more hollow units are used to make up the thickness of a wall, the stretcher courses shall be bonded at vertical intervals not exceeding 34 inches (864 mm) by lapping not less than 3 inches (76 mm) over the unit below, or by lapping at vertical intervals not exceeding 17 inches (432 mm) with units that are not less than 50 percent thicker than the units below.

R606.13.2 Bonding with wall ties or joint reinforcement. Bonding with wall ties or joint reinforcement shall comply with Section R606.13.2.3.

R606.13.2.1 Bonding with wall ties. Bonding with wall ties, except as required by Section R607, where the facing and backing (adjacent wythes) of masonry walls are bonded with $^3/_{16}$-inch-diameter (5 mm) wall ties embedded in the horizontal mortar joints, there shall be not less than one metal tie for each $4^1/_2$ square feet (0.418 m^2) of wall area. Ties in alternate courses shall be staggered. The maximum vertical distance between ties shall not exceed 24 inches (610 mm), and the maximum horizontal distance shall not exceed 36 inches (914 mm). Rods or ties bent to rectangular shape shall be used with hollow masonry units laid with the cells vertical. In other walls, the ends of ties shall be bent to 90-degree (0.79 rad) angles to provide hooks not less than 2 inches (51 mm) long. Additional bonding ties shall be provided at all openings, spaced not more than 3 feet (914 mm) apart around the perimeter and within 12 inches (305 mm) of the opening.

R606.13.2.2 Bonding with adjustable wall ties. Where the facing and backing (adjacent wythes) of masonry are bonded with adjustable wall ties, there shall be not less than one tie for each 2.67 square feet (0.248 m^2) of wall area. Neither the vertical nor the horizontal spacing of the adjustable wall ties shall exceed 24 inches (610 mm). The maximum vertical offset of bed joints from one wythe to the other shall be 1.25 inches (32 mm). The maximum clearance between connecting parts of the ties shall be $^1/_{16}$ inch (2 mm). Where pintle legs are used, ties shall have not less than two $^3/_{16}$-inch-diameter (5 mm) legs.

R606.13.2.3 Bonding with prefabricated joint reinforcement. Where the facing and backing (adjacent wythes) of masonry are bonded with prefabricated joint reinforcement, there shall be not less than one cross wire serving as a tie for each 2.67 square feet (0.248 m^2) of wall area. The vertical spacing of the joint reinforcement shall not exceed 16 inches (406 mm). Cross wires on prefabricated joint reinforcement shall not be smaller than No. 9 gage. The longitudinal wires shall be embedded in the mortar.

R606.13.3 Bonding with natural or cast stone. Bonding with natural and cast stone shall conform to Sections R606.13.3.1 and R606.13.3.2.

R606.13.3.1 Ashlar masonry. In ashlar masonry, bonder units, uniformly distributed, shall be provided to the extent of not less than 10 percent of the wall area. Such bonder units shall extend not less than 4 inches (102 mm) into the backing wall.

R606.13.3.2 Rubble stone masonry. Rubble stone masonry 24 inches (610 mm) or less in thickness shall have bonder units with a maximum spacing of 3 feet (914 mm) vertically and 3 feet (914 mm) horizontally, and if the masonry is of greater thickness than 24 inches (610 mm), shall have one bonder unit for each 6 square feet (0.557 m^2) of wall surface on both sides.

R606.14 Anchored and adhered masonry veneer.

R606.14.1 Anchored veneer. Anchored masonry veneer installed over a backing of wood or cold-formed steel shall meet the requirements of Section R703.8.

R606.14.2 Adhered veneer. Adhered masonry veneer shall be installed in accordance with the requirements of Section R703.12.

SECTION R607
GLASS UNIT MASONRY

R607.1 General. Panels of glass unit masonry located in load-bearing and nonload-bearing exterior and interior walls shall be constructed in accordance with this section.

R607.2 Materials. Hollow glass units shall be partially evacuated and have a minimum average glass face thickness of $^3/_{16}$ inch (5 mm). The surface of units in contact with mortar shall be treated with a polyvinyl butyral coating or latex-based paint. The use of reclaimed units is prohibited.

R607.3 Units. Hollow or solid glass block units shall be standard or thin units.

R607.3.1 Standard units. The specified thickness of standard units shall be not less than $3^7/_8$ inches (98 mm).

R607.3.2 Thin units. The specified thickness of thin units shall be not less than $3^1/_8$ inches (79 mm) for hollow units and not less than 3 inches (76 mm) for solid units.

R607.4 Isolated panels. Isolated panels of glass unit masonry shall conform to the requirements of this section.

R607.4.1 Exterior standard-unit panels. The maximum area of each individual standard-unit panel shall be 144 square feet (13.4 m^2) where the design wind pressure is 20 pounds per square foot (958 Pa). The maximum area of such panels subjected to design wind pressures other than 20 pounds per square foot (958 Pa) shall be in accordance with Figure R607.4.1. The maximum panel dimension between structural supports shall be 25 feet (7620 mm) in width or 20 feet (6096 mm) in height.

R607.4.2 Exterior thin-unit panels. The maximum area of each individual thin-unit panel shall be 85 square feet (7.9 m^2). The maximum dimension between structural supports shall be 15 feet (4572 mm) in width or 10 feet (3048 mm) in height. Thin units shall not be used in applications where the design wind pressure as stated in Table R301.2(1) exceeds 20 pounds per square foot (958 Pa).

R607.4.3 Interior panels. The maximum area of each individual standard-unit panel shall be 250 square feet (23.2 m^2). The maximum area of each thin-unit panel shall be 150 square feet (13.9 m^2). The maximum dimension between structural supports shall be 25 feet (7620 mm) in width or 20 feet (6096 mm) in height.

R607.4.4 Curved panels. The width of curved panels shall conform to the requirements of Sections R607.4.1, R607.4.2 and R607.4.3, except additional structural supports shall be provided at locations where a curved section joins a straight section, and at inflection points in multicurved walls.

R607.5 Panel support. Glass unit masonry panels shall conform to the support requirements of this section.

R607.5.1 Deflection. The maximum total deflection of structural members that support glass unit masonry shall not exceed $^1/_{600}$.

R607.5.2 Lateral support. Glass unit masonry panels shall be laterally supported along the top and sides of the panel. Lateral supports for glass unit masonry panels shall be designed to resist not less than 200 pounds per lineal feet (2918 N/m) of panel, or the actual applied loads, whichever is greater. Except for single unit panels, lateral support shall be provided by panel anchors along the top and sides spaced not greater than 16 inches (406 mm) on center or by channel-type restraints. Single unit panels shall be supported by channel-type restraints.

Exceptions:

1. Lateral support is not required at the top of panels that are one unit wide.
2. Lateral support is not required at the sides of panels that are one unit high.

R607.5.2.1 Panel anchor restraints. Panel anchors shall be spaced not greater than 16 inches (406 mm) on center in both jambs and across the head. Panel anchors shall be embedded not less than 12 inches (305 mm) and shall be provided with two fasteners so as to resist the loads specified in Section R607.5.2.

R607.5.2.2 Channel-type restraints. Glass unit masonry panels shall be recessed not less than 1 inch (25 mm) within channels and chases. Channel-type restraints shall be oversized to accommodate expansion material in the opening, packing and sealant between the framing restraints, and the glass unit masonry perimeter units.

R607.6 Sills. Before bedding of glass units, the sill area shall be covered with a water base asphaltic emulsion coating. The coating shall be not less than $^1/_8$ inch (3 mm) thick.

R607.7 Expansion joints. Glass unit masonry panels shall be provided with expansion joints along the top and sides at all structural supports. Expansion joints shall be not less than $^3/_8$ inch (10 mm) in thickness and shall have sufficient thickness to accommodate displacements of the supporting structure. Expansion joints shall be entirely free of mortar and other debris and shall be filled with resilient material.

R607.8 Mortar. Glass unit masonry shall be laid with Type S or N mortar. Mortar shall not be retempered after initial set. Mortar unused within $1^1/_2$ hours after initial mixing shall be discarded.

R607.9 Reinforcement. Glass unit masonry panels shall have horizontal joint reinforcement spaced not greater than 16 inches (406 mm) on center located in the mortar bed joint. Horizontal joint reinforcement shall extend the entire length of the panel but shall not extend across expansion joints. Longitudinal wires shall be lapped not less than 6 inches (152 mm) at splices. Joint reinforcement shall be placed in the bed

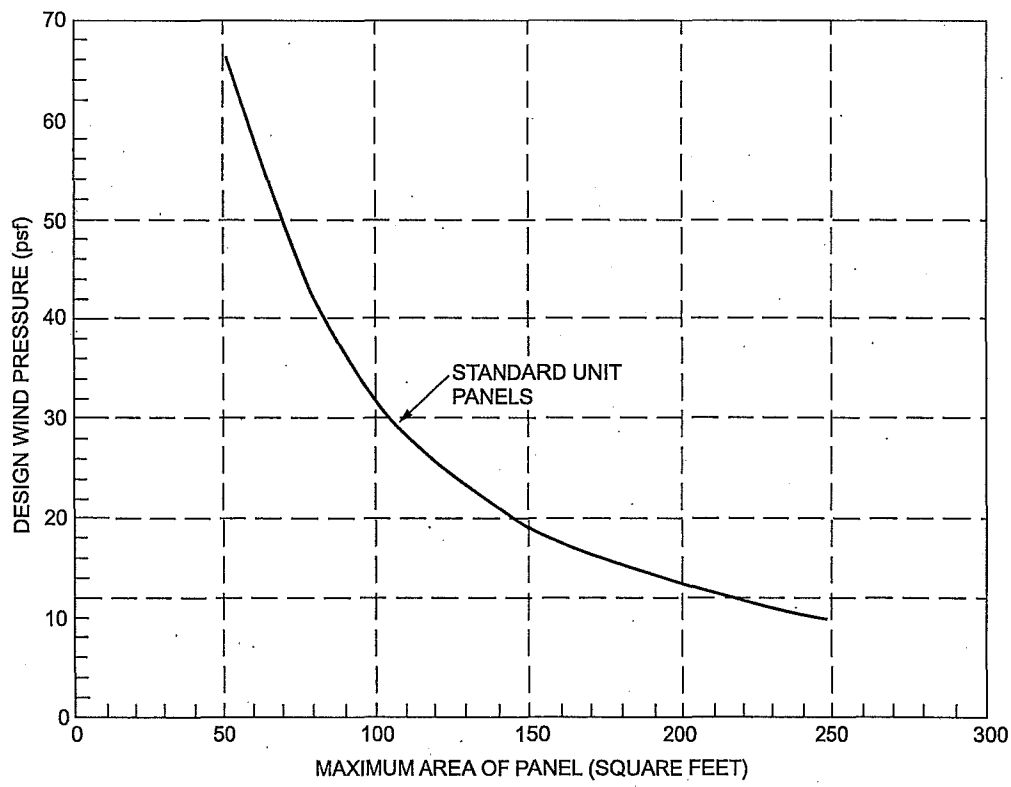

For SI: 1 square foot = 0.0929 m^2, 1 pound per square foot = 0.0479 kPa.

FIGURE R607.4.1
GLASS UNIT MASONRY DESIGN WIND LOAD RESISTANCE

joint immediately below and above openings in the panel. The reinforcement shall have not less than two parallel longitudinal wires of size W1.7 or greater, and have welded cross wires of size W1.7 or greater.

R607.10 Placement. Glass units shall be placed so head and bed joints are filled solidly. Mortar shall not be furrowed. Head and bed joints of glass unit masonry shall be $^1/_4$ inch (6.4 mm) thick, except that vertical joint thickness of radial panels shall be not less than $^1/_8$ inch (3 mm) or greater than $^5/_8$ inch (16 mm). The bed joint thickness tolerance shall be minus $^1/_{16}$ inch (1.6 mm) and plus $^1/_8$ inch (3 mm). The head joint thickness tolerance shall be plus or minus $^1/_8$ inch (3 mm).

SECTION R608
EXTERIOR CONCRETE WALL CONSTRUCTION

R608.1 General. Exterior concrete walls shall be designed and constructed in accordance with the provisions of this section or in accordance with the provisions of PCA 100 or ACI 318. Where PCA 100, ACI 318 or the provisions of this section are used to design concrete walls, project drawings, typical details and specifications are not required to bear the seal of the architect or engineer responsible for design, unless otherwise required by the state law of the jurisdiction having authority.

R608.1.1 Interior construction. These provisions are based on the assumption that interior walls and partitions, both load-bearing and nonload-bearing, floors and roof/ceiling assemblies are constructed of *light-framed construction* complying with the limitations of this code and the additional limitations of Section R608.2. Design and construction of light-framed assemblies shall be in accordance with the applicable provisions of this code. Where second-story exterior walls are of *light-framed construction*, they shall be designed and constructed as required by this code.

Aspects of concrete construction not specifically addressed by this code, including interior concrete walls, shall comply with ACI 318.

R608.1.2 Other concrete walls. Exterior concrete walls constructed in accordance with this code shall comply with the shapes and minimum concrete cross-sectional dimensions of Table R608.3. Other types of forming systems resulting in concrete walls not in compliance with this section shall be designed in accordance with ACI 318.

R608.2 Applicability limits. The provisions of this section shall apply to the construction of exterior concrete walls for buildings not greater than 60 feet (18 288 mm) in plan dimensions, floors with clear spans not greater than 32 feet (9754 mm) and roofs with clear spans not greater than 40 feet (12 192 mm). Buildings shall not exceed 35 feet (10 668 mm) in mean roof height or two stories in height above grade. Floor/ceiling dead loads shall not exceed 10 pounds per square foot (479 Pa), roof/ceiling dead loads shall not exceed 15 pounds per square foot (718 Pa) and *attic* live loads shall not exceed 20 pounds per square foot (958 Pa). Roof overhangs shall not exceed 2 feet (610 mm) of horizontal projection beyond the exterior wall and the dead load of the overhangs shall not exceed 8 pounds per square foot (383 Pa).

Walls constructed in accordance with the provisions of this section shall be limited to buildings subjected to a maximum design wind speed of 160 mph (72 m/s) Exposure B, 136 mph (61 m/s) Exposure C and 125 mph (56 m/s) Exposure D. Walls constructed in accordance with the provisions of this section shall be limited to detached one- and two-family *dwellings* and townhouses assigned to Seismic Design Category A or B, and detached one- and two-family *dwellings* assigned to Seismic Design Category C.

Buildings that are not within the scope of this section shall be designed in accordance with PCA 100 or ACI 318.

R608.3 Concrete wall systems. Concrete walls constructed in accordance with these provisions shall comply with the shapes and minimum concrete cross-sectional dimensions of Table R608.3.

R608.3.1 Flat wall systems. Flat concrete wall systems shall comply with Table R608.3 and Figure R608.3(1) and have a minimum nominal thickness of 4 inches (102 mm).

R608.3.2 Waffle-grid wall systems. Waffle-grid wall systems shall comply with Table R608.3 and Figure R608.3(2) and shall have a minimum nominal thickness of 6 inches (152 mm) for the horizontal and vertical concrete members (cores). The core and web dimensions shall comply with Table R608. 3. The maximum weight of waffle-grid walls shall comply with Table R608.3.

R608.3.3 Screen-grid wall systems. Screen-grid wall systems shall comply with Table R608.3 and Figure R608.3(3) and shall have a minimum nominal thickness of 6 inches (152 mm) for the horizontal and vertical concrete members (cores). The core dimensions shall comply with Table R608.3. The maximum weight of screen-grid walls shall comply with Table R608.3.

R608.4 Stay-in-place forms. Stay-in-place concrete forms shall comply with this section.

R608.4.1 Surface burning characteristics. The flame spread index and smoke-developed index of forming material, other than foam plastic, left exposed on the interior shall comply with Section R302.9. The surface burning characteristics of foam plastic used in insulating concrete forms shall comply with Section R316.3.

R608.4.2 Interior covering. Stay-in-place forms constructed of rigid foam plastic shall be protected on the interior of the building as required by Sections R316.4 and R702.3.4. Where gypsum board is used to protect the foam plastic, it shall be installed with a mechanical fastening system. Use of adhesives is permitted in addition to mechanical fasteners.

R608.4.3 Exterior wall covering. Stay-in-place forms constructed of rigid foam plastics shall be protected from sunlight and physical damage by the application of an *approved* exterior wall covering complying with this code. Exterior surfaces of other stay-in-place forming systems shall be protected in accordance with this code.

Requirements for installation of masonry veneer, stucco and other finishes on the exterior of concrete walls and other construction details not covered in this section shall comply with the requirements of this code.

TABLE R608.3
DIMENSIONAL REQUIREMENTS FOR WALLS[a, b]

WALL TYPE AND NOMINAL THICKNESS	MAXIMUM WALL WEIGHT[c] (psf)	MINIMUM WIDTH, W, OF VERTICAL CORES (inches)	MINIMUM THICKNESS, T, OF VERTICAL CORES (inches)	MAXIMUM SPACING OF VERTICAL CORES (inches)	MAXIMUM SPACING OF HORIZONTAL CORES (inches)	MINIMUM WEB THICKNESS (inches)
4″ Flat[d]	50	N/A	N/A	N/A	N/A	N/A
6″ Flat[d]	75	N/A	N/A	N/A	N/A	N/A
8″ Flat[d]	100	N/A	N/A	N/A	N/A	N/A
10″ Flat[d]	125	N/A	N/A	N/A	N/A	N/A
6″ Waffle-grid	56	8[e]	5.5[e]	12	16	2
8″ Waffle-grid	76	8[f]	8[f]	12	16	2
6″ Screen-grid	53	6.25[g]	6.25[g]	12	12	N/A

For SI: 1 inch = 25.4 mm; 1 pound per square foot = 0.0479 kPa, 1 pound per cubic foot = 2402.77 kg/m^3, 1 square inch = 645.16 mm^2, 1 inch^4 = 42 cm^4.

a. Width "W," thickness "T," spacing and web thickness, refer to Figures R608.3(2) and R608.3(3).

b. N/A indicates not applicable.

c. Wall weight is based on a unit weight of concrete of 150 pcf. For flat walls the weight is based on the nominal thickness. The tabulated values do not include any allowance for interior and exterior finishes.

d. Nominal wall thickness. The actual as-built thickness of a flat wall shall not be more than $^1/_2$ inch less or more than $^1/_4$ inch more than the nominal dimension indicated.

e. Vertical core is assumed to be elliptical-shaped. Another shape core is permitted provided the minimum thickness is 5 inches, the moment of inertia, *I*, about the centerline of the wall (ignoring the web) is not less than 65 inch^4, and the area, *A*, is not less than 31.25 square inches. The width used to calculate *A* and *I* shall not exceed 8 inches.

f. Vertical core is assumed to be circular. Another shape core is permitted provided the minimum thickness is 7 inches, the moment of inertia, *I*, about the centerline of the wall (ignoring the web) is not less than 200 inch^4, and the area, *A*, is not less than 49 square inches. The width used to calculate *A* and *I* shall not exceed 8 inches.

g. Vertical core is assumed to be circular. Another shape core is permitted provided the minimum thickness is 5.5 inches, the moment of inertia, *I*, about the centerline of the wall is not less than 76 inch^4, and the area, *A*, is not less than 30.25 square inches. The width used to calculate *A* and *I* shall not exceed 6.25 inches.

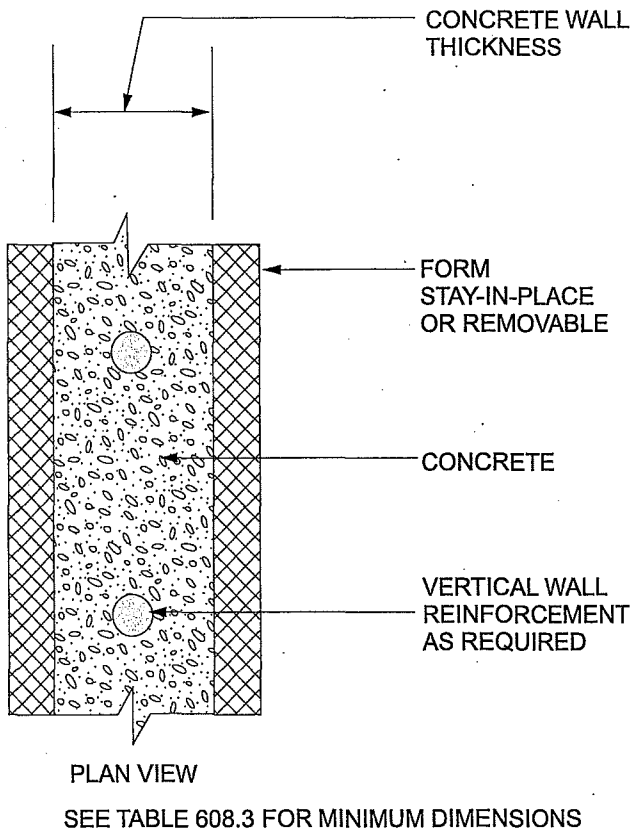

FIGURE R608.3(1)
FLAT WALL SYSTEM

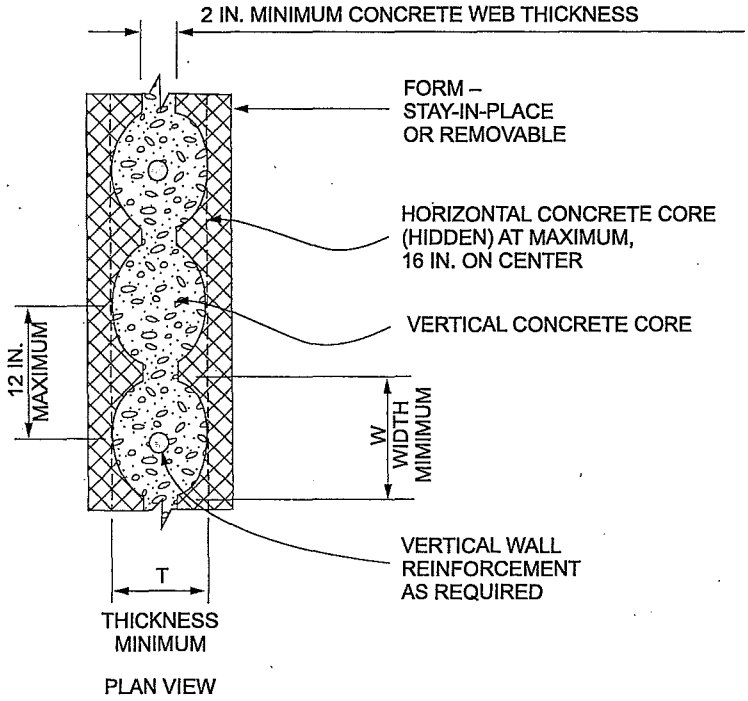

SEE TABLE R608.3 FOR MINIMUM DIMENSIONS

For SI: 1 inch = 25.4 mm.

FIGURE R6083(2)
WAFFLE-GRID WALL SYSTEM

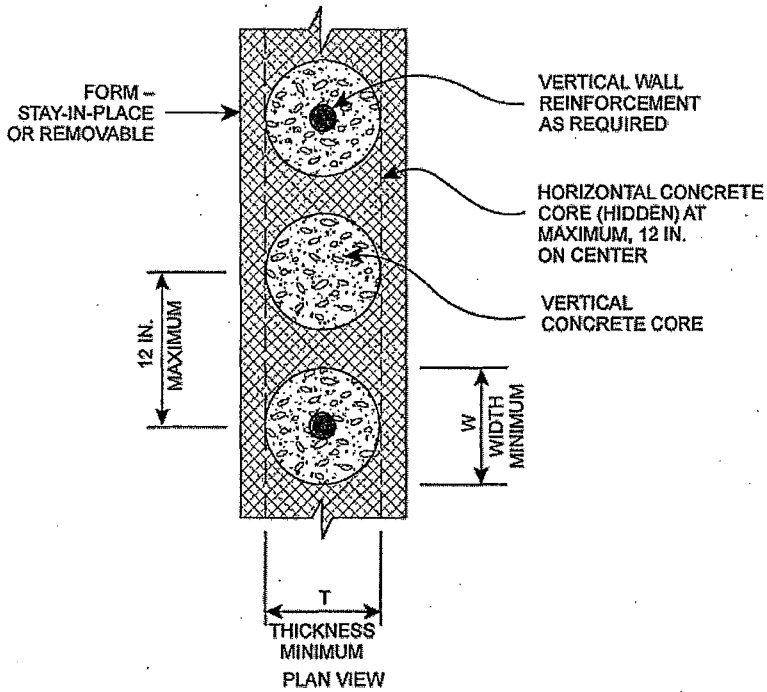

SEE TABLE R608.3 FOR MINIMUM DIMENSIONS

For SI: 1 inch = 25.4 mm.

FIGURE R608.3(3)
SCREEN-GRID WALL SYSTEM

2726

R608.4.4 Flat ICF wall systems. Flat ICF wall system forms shall conform to ASTM E 2634.

R608.5 Materials. Materials used in the construction of concrete walls shall comply with this section.

R608.5.1 Concrete and materials for concrete. Materials used in concrete, and the concrete itself, shall conform to requirements of this section, PCA 100 or ACI 318.

R608.5.1.1 Cements. The following standards as referenced in Chapter 44 shall be permitted to be used.

1. ASTM C 150
2. ASTM C 595
3. ASTM C 1157

R608.5.1.2 Concrete mixing and delivery. Mixing and delivery of concrete shall comply with ASTM C 94 or ASTM C 685.

R608.5.1.3 Maximum aggregate size. The nominal maximum size of coarse aggregate shall not exceed one-fifth the narrowest distance between sides of forms, or three-fourths the clear spacing between reinforcing bars or between a bar and the side of the form.

Exception: When *approved*, these limitations shall not apply where removable forms are used and workability and methods of consolidation permit concrete to be placed without honeycombs or voids.

R608.5.1.4 Proportioning and slump of concrete. Proportions of materials for concrete shall be established to provide workability and consistency to permit concrete to be worked readily into forms and around reinforcement under conditions of placement to be employed, without segregation or excessive bleeding. Slump of concrete placed in removable forms shall not exceed 6 inches (152 mm).

Exception: When *approved*, the slump is permitted to exceed 6 inches (152 mm) for concrete mixtures that are resistant to segregation, and are in accordance with the form manufacturer's recommendations.

Slump of concrete placed in stay-in-place forms shall exceed 6 inches (152 mm). Slump of concrete shall be determined in accordance with ASTM C 143.

R608.5.1.5 Compressive strength. The minimum specified compressive strength of concrete, f'_c, shall comply with Section R402.2 and shall be not less than 2,500 pounds per square inch (17.2 MPa) at 28 days.

R608.5.1.6 Consolidation of concrete. Concrete shall be consolidated by suitable means during placement and shall be worked around embedded items and reinforcement and into corners of forms. Where stay-in-place forms are used, concrete shall be consolidated by internal vibration.

Exception: When *approved*, self-consolidating concrete mixtures with slumps equal to or greater than 8 inches (203 mm) that are specifically designed for placement without internal vibration need not be internally vibrated.

R608.5.2 Steel reinforcement and anchor bolts.

R608.5.2.1 Steel reinforcement. Steel reinforcement shall comply with ASTM A 615, ASTM A 706, or ASTM A 996. ASTM A 996 bars produced from rail steel shall be Type R.

R608.5.2.2 Anchor bolts. Anchor bolts for use with connection details in accordance with Figures R608.9(1) through R608.9(12) shall be bolts with heads complying with ASTM A 307 or ASTM F 1554. ASTM A 307 bolts shall be Grade A with heads. ASTM F 1554 bolts shall be Grade 36 minimum. Instead of bolts with heads, it is permissible to use rods with threads on both ends fabricated from steel complying with ASTM A 36. The threaded end of the rod to be embedded in the concrete shall be provided with a hex or square nut.

R608.5.2.3 Sheet steel angles and tension tie straps. Angles and tension tie straps for use with connection details in accordance with Figures R608.9(1) through R608.9(12) shall be fabricated from sheet steel complying with ASTM A 653 SS, ASTM A 792 SS, or ASTM A 875 SS. The steel shall be minimum Grade 33 unless a higher grade is required by the applicable figure.

R608.5.3 Form materials and form ties. Forms shall be made of wood, steel, aluminum, plastic, a composite of cement and foam insulation, a composite of cement and wood chips, or other *approved* material suitable for supporting and containing concrete. Forms shall provide sufficient strength to contain concrete during the concrete placement operation.

Form ties shall be steel, solid plastic, foam plastic, a composite of cement and wood chips, a composite of cement and foam plastic, or other suitable material capable of resisting the forces created by fluid pressure of fresh concrete.

R608.5.4 Reinforcement installation details.

R608.5.4.1 Support and cover. Reinforcement shall be secured in the proper location in the forms with tie wire or other bar support system such that displacement will not occur during the concrete placement operation. Steel reinforcement in concrete cast against the earth shall have a minimum cover of 3 inches (76 mm). Minimum cover for reinforcement in concrete cast in removable forms that will be exposed to the earth or weather shall be $1^1/_2$ inches (38 mm) for No. 5 bars and smaller, and 2 inches (50 mm) for No. 6 bars and larger. For concrete cast in removable forms that will not be exposed to the earth or weather, and for concrete cast in stay-in-place forms, minimum cover shall be $^3/_4$ inch (19 mm). The minus tolerance for cover shall not exceed the smaller of one-third the required cover and $^3/_8$ inch (10 mm). See Section R608.5.4.4 for cover requirements for hooks of bars developed in tension.

R608.5.4.2 Location of reinforcement in walls. For location of reinforcement in foundation walls and above-grade walls, see Sections R404.1.2.3.7.2 and R608.6.5, respectively.

R608.5.4.3 Lap splices. Vertical and horizontal wall reinforcement required by Sections R608.6 and R608.7 shall be the longest lengths practical. Where splices are necessary in reinforcement, the length of lap splices shall be in accordance with Table R608.5.4(1) and Figure R608.5.4(1). The maximum gap between noncontact parallel bars at a lap splice shall not exceed the smaller of one-fifth the required lap length and 6 inches (152 mm). See Figure R608.5.4(1).

R608.5.4.4 Development of bars in tension. Where bars are required to be developed in tension by other provisions of this code, development lengths and cover for hooks and bar extensions shall comply with Table R608.5.4(1) and Figure R608.5.4(2). The development lengths shown in Table R608.5.4(1) shall apply to bundled bars in lintels installed in accordance with Section R608.8.2.2.

R608.5.4.5 Standard hooks. Where reinforcement is required by this code to terminate with a standard hook, the hook shall comply with Figure R608.5.4(3).

TABLE R608.5.4(1)
LAP SPLICE AND TENSION DEVELOPMENT LENGTHS

	BAR SIZE NO.	YIELD STRENGTH OF STEEL, f_y- psi (MPa)	
		40,000 (280)	60,000 (420)
		Splice length or tension development length (inches)	
Lap splice length-tension	4	20	30
	5	25	38
	6	30	45
Tension development length for straight bar	4	15	23
	5	19	28
	6	23	34
Tension development length for: a. 90-degree and 180-degree standard hooks with not less than $2^1/_2$ inches of side cover perpendicular to plane of hook, and b. 90-degree standard hooks with not less than 2 inches of cover on the bar extension beyond the hook.	4	6	9
	5	7	11
	6	8	13
Tension development length for bar with 90-degree or 180-degree standard hook having less cover than required above.	4	8	12
	5	10	15
	6	12	18

For SI: 1 inch = 25.4 mm.

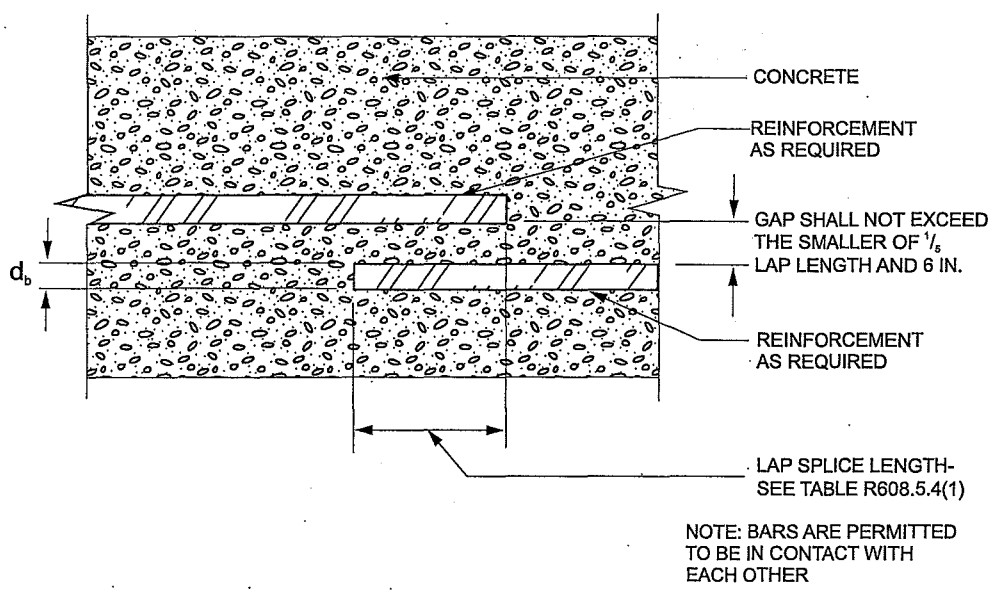

For SI: 1 inch = 25.4 mm.

FIGURE R608.5.4(1)
LAP SPLICES

2728

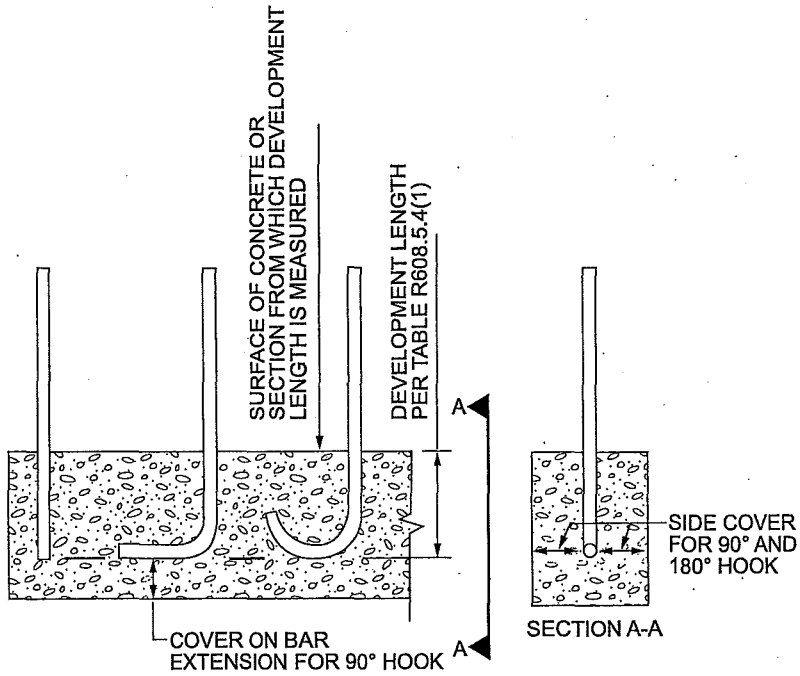

For SI: 1 degree = 0.0175 rad.

FIGURE R608.5.4(2)
DEVELOPMENT LENGTH AND COVER FOR HOOKS AND BAR EXTENSION

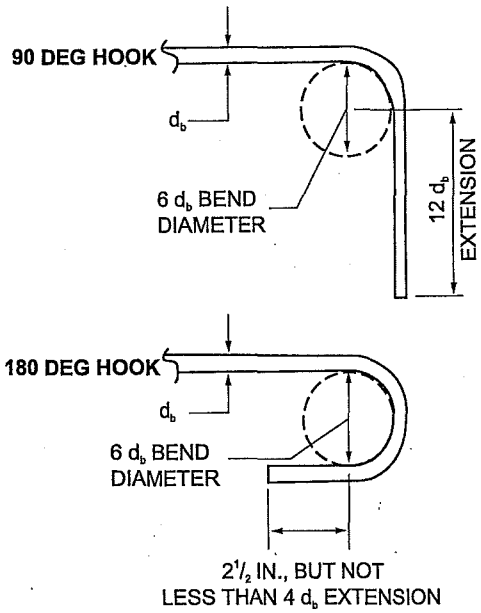

HOOKS FOR REINFORCEMENT IN WALLS AND FOUNDATIONS

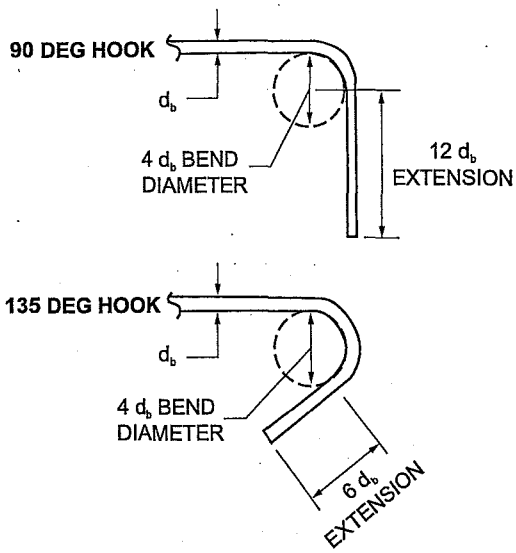

HOOKS FOR STIRRUPS IN LINTELS

For SI: 1 inch = 25.4 mm, 1 degree = 0.0175 rad.

FIGURE R608.5.4(3)
STANDARD HOOKS

TABLE R608.5.4(2)
MAXIMUM SPACING FOR ALTERNATIVE BAR SIZE AND/OR ALTERNATIVE GRADE OF STEEL[a, b, c]

BAR SPACING FROM APPLICABLE TABLE IN SECTION R608.6 (inches)	BAR SIZE FROM APPLICABLE TABLE IN SECTION R608.6														
	#4					#5					#6				
	Alternate bar size and/or alternate grade of steel desired														
	Grade 60		Grade 40			Grade 60		Grade 40			Grade 60		Grade 40		
	#5	#6	#4	#5	#6	#4	#6	#4	#5	#6	#4	#5	#4	#5	#6
	Maximum spacing for alternate bar size and/or alternate grade of steel (inches)														
8	12	18	5	8	12	5	11	3	5	8	4	6	2	4	5
9	14	20	6	9	13	6	13	4	6	9	4	6	3	4	6
10	16	22	7	10	15	6	14	4	7	9	5	7	3	5	7
11	17	24	7	11	16	7	16	5	7	10	5	8	3	5	7
12	19	26	8	12	18	8	17	5	8	11	5	8	4	6	8
13	20	29	9	13	19	8	18	6	9	12	6	9	4	6	9
14	22	31	9	14	21	9	20	6	9	13	6	10	4	7	9
15	23	33	10	16	22	10	21	6	10	14	7	11	5	7	10
16	25	35	11	17	23	10	23	7	11	15	7	11	5	8	11
17	26	37	11	18	25	11	24	7	11	16	8	12	5	8	11
18	28	40	12	19	26	12	26	8	12	17	8	13	5	8	12
19	29	42	13	20	28	12	27	8	13	18	9	13	6	9	13
20	31	44	13	21	29	13	28	9	13	19	9	14	6	9	13
21	33	46	14	22	31	14	30	9	14	20	10	15	6	10	14
22	34	48	15	23	32	14	31	9	15	21	10	16	7	10	15
23	36	48	15	24	34	15	33	10	15	22	10	16	7	11	15
24	37	48	16	25	35	15	34	10	16	23	11	17	7	11	16
25	39	48	17	26	37	16	35	11	17	24	11	18	8	12	17
26	40	48	17	27	38	17	37	11	17	25	12	18	8	12	17
27	42	48	18	28	40	17	38	12	18	26	12	19	8	13	18
28	43	48	19	29	41	18	40	12	19	26	13	20	8	13	19
29	45	48	19	30	43	19	41	12	19	27	13	20	9	14	19
30	47	48	20	31	44	19	43	13	20	28	14	21	9	14	20
31	48	48	21	32	45	20	44	13	21	29	14	22	9	15	21
32	48	48	21	33	47	21	45	14	21	30	15	23	10	15	21
33	48	48	22	34	48	21	47	14	22	31	15	23	10	16	22
34	48	48	23	35	48	22	48	15	23	32	15	24	10	16	23
35	48	48	23	36	48	23	48	15	23	33	16	25	11	16	23
36	48	48	24	37	48	23	48	15	24	34	16	25	11	17	24
37	48	48	25	38	48	24	48	16	25	35	17	26	11	17	25
38	48	48	25	39	48	25	48	16	25	36	17	27	12	18	25
39	48	48	26	40	48	25	48	17	26	37	18	27	12	18	26
40	48	48	27	41	48	26	48	17	27	38	18	28	12	19	27
41	48	48	27	42	48	26	48	18	27	39	19	29	12	19	27
42	48	48	28	43	48	27	48	18	28	40	19	30	13	20	28
43	48	48	29	44	48	28	48	18	29	41	20	30	13	20	29
44	48	48	29	45	48	28	48	19	29	42	20	31	13	21	29
45	48	48	30	47	48	29	48	19	30	43	20	32	14	21	30
46	48	48	31	48	48	30	48	20	31	44	21	32	14	22	31
47	48	48	31	48	48	30	48	20	31	44	21	33	14	22	31
48	48	48	32	48	48	31	48	21	32	45	22	34	15	23	32

For SI: 1 inch = 25.4 mm.

a. This table is for use with tables in Section R608.6 that specify the minimum bar size and maximum spacing of vertical wall reinforcement for foundation walls and above-grade walls. Reinforcement specified in tables in Section R608.6 is based on Grade 60 (420 MPa) steel reinforcement.

b. Bar spacing shall not exceed 48 inches on center and shall be not less than one-half the nominal wall thickness.

c. For Grade 50 (350 MPa) steel bars (ASTM A 996, Type R), use spacing for Grade 40 (280 MPa) bars or interpolate between Grade 40 (280 MPa) and Grade 60 (420 MPa).

R608.5.4.6 Webs of waffle-grid walls. Reinforcement, including stirrups, shall not be placed in webs of waffle-grid walls, including lintels. Webs are permitted to have form ties.

R608.5.4.7 Alternate grade of reinforcement and spacing. Where tables in Sections R404.1.3 and R608.6 specify vertical wall reinforcement based on minimum bar size and maximum spacing, which are based on Grade 60 (420 MPa) steel reinforcement, different size bars or bars made from a different grade of steel are permitted provided an equivalent area of steel per linear foot of wall is provided. Use of Table R608.5.4(2) is permitted to determine the maximum bar spacing for different bar sizes than specified in the tables and/or bars made from a different grade of steel. Bars shall not be spaced less than one-half the wall thickness, or more than 48 inches (1219 mm) on center.

R608.5.5 Construction joints in walls. Construction joints shall be made and located to not impair the strength of the wall. Construction joints in plain concrete walls, including walls required to have not less than No. 4 bars at 48 inches (1219 mm) on center by Section R608.6, shall be located at points of lateral support, and not less than one No. 4 bar shall extend across the construction joint at a spacing not to exceed 24 inches (610 mm) on center. Construction joint reinforcement shall have not less than 12 inches (305 mm) embedment on both sides of the joint. Construction joints in reinforced concrete walls shall be located in the middle third of the span between lateral supports, or located and constructed as required for joints in plain concrete walls.

Exception: Vertical wall reinforcement required by this code is permitted to be used in lieu of construction joint reinforcement, provided the spacing does not exceed 24 inches (610 mm), or the combination of wall reinforcement and No. 4 bars described in Section R608.5.5 does not exceed 24 inches (610 mm).

R608.6 Above-grade wall requirements.

R608.6.1 General. The minimum thickness of load-bearing and nonload-bearing above-grade walls and reinforcement shall be as set forth in the appropriate table in this section based on the type of wall form to be used. The wall shall be designed in accordance with ACI 318 where the wall or building is not within the limitations of Section R608.2, where design is required by the tables in this section or where the wall is not within the scope of the tables in this section.

Above-grade concrete walls shall be constructed in accordance with this section and Figure R608.6(1), R608.6(2), R608.6(3) or R608.6(4). Above-grade concrete walls that are continuous with stem walls and not laterally supported by the slab-on-ground shall be designed and constructed in accordance with this section. Concrete walls shall be supported on continuous foundation walls or slabs-on-ground that are monolithic with the footing in accordance with Section R403. The minimum length of solid wall without openings shall be in accordance with Section R608.7. Reinforcement around openings, including lintels, shall be in accordance with Section R608.8. Lateral support for above-grade walls in the out-of-plane direction shall be provided by connections to the floor framing system, if applicable, and to ceiling and roof framing systems in accordance with Section R608.9. The wall thickness shall be equal to or greater than the thickness of the wall in the *story* above.

R608.6.2 Wall reinforcement for wind. Vertical wall reinforcement for resistance to out-of-plane wind forces shall be determined from Table R608.6(1), R608.6(2), R608.6(3) or R608.6(4). For the design of nonload-bearing walls, in Tables R608.6(1), R608.6(2) and R608.6(3) use the appropriate column labeled "Top." (see Sections R608.7.2.2.2 and R608.7.2.2.3). There shall be a vertical bar at corners of exterior walls. Unless more horizontal reinforcement is required by Section R608.7.2.2.1, the minimum horizontal reinforcement shall be four No. 4 bars [Grade 40 (280 MPa)] placed as follows: top bar within 12 inches (305 mm) of the top of the wall, bottom bar within 12 inches (305 mm) of the finish floor and one bar each at approximately one-third and two-thirds of the wall height.

R608.6.3 Continuity of wall reinforcement between stories. Vertical reinforcement required by this section shall be continuous between elements providing lateral support for the wall. Reinforcement in the wall of the *story* above shall be continuous with the reinforcement in the wall of the *story* below, or the foundation wall, if applicable. Lap splices, where required, shall comply with Section R608.5.4.3 and Figure R608.5.4(1). Where the above-grade wall is supported by a monolithic slab-on-ground and footing, dowel bars with a size and spacing to match the vertical above-grade concrete wall reinforcement shall be embedded in the monolithic slab-on-ground and footing the distance required to develop the dowel bar in tension in accordance with Section R608.5.4.4 and Figure R608.5.4(2) and lap-spliced with the above-grade wall reinforcement in accordance with Section R608.5.4.3 and Figure R608.5.4(1).

Exception: Where reinforcement in the wall above cannot be made continuous with the reinforcement in the wall below, the bottom of the reinforcement in the wall above shall be terminated in accordance with one of the following:

1. Extend below the top of the floor the distance required to develop the bar in tension in accordance with Section R608.5.4.4 and Figure R608.5.4(2).
2. Lap-spliced in accordance with Section R608.5.4.3 and Figure R608.5.4(1) with a dowel bar that extends into the wall below the distance required to develop the bar in tension in accordance with Section R608.5.4.4 and Figure R608.5.4(2).

Where a construction joint in the wall is located below the level of the floor and less than the distance required to develop the bar in tension, the distance required to develop the bar in tension shall be measured from the top of the concrete below the joint. See Section R608.5.5.

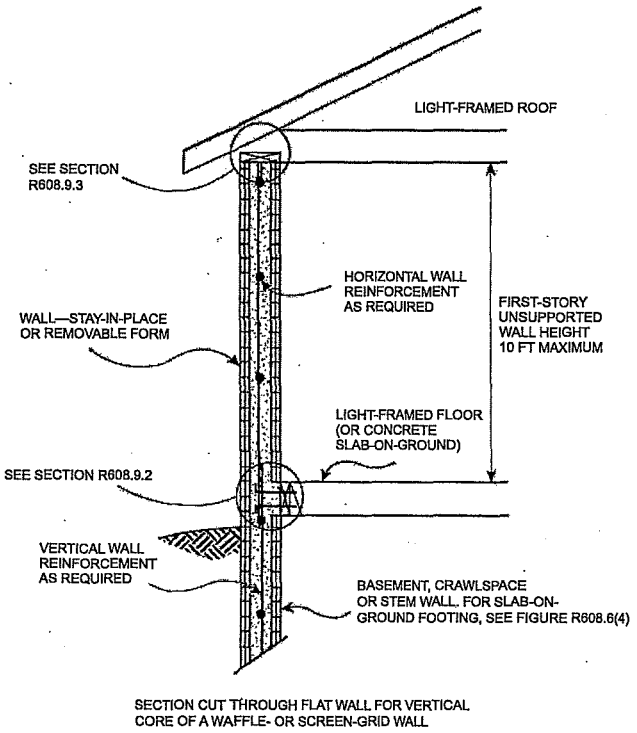

For SI: 1 foot = 304.8 mm.

FIGURE R608.6(1)
ABOVE-GRADE CONCRETE WALL CONSTRUCTION ONE STORY

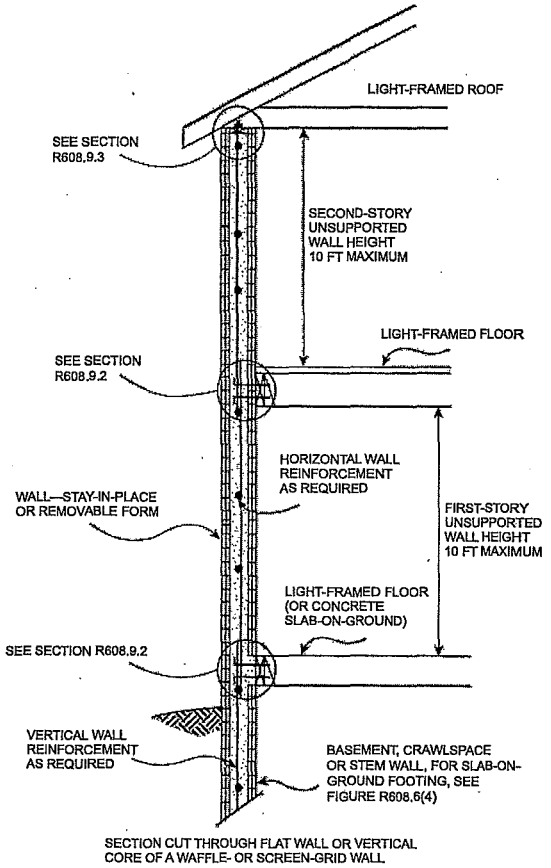

For SI: 1 foot = 304.8 mm.

FIGURE R608.6(3)
ABOVE-GRADE CONCRETE WALL CONSTRUCTION TWO-STORY

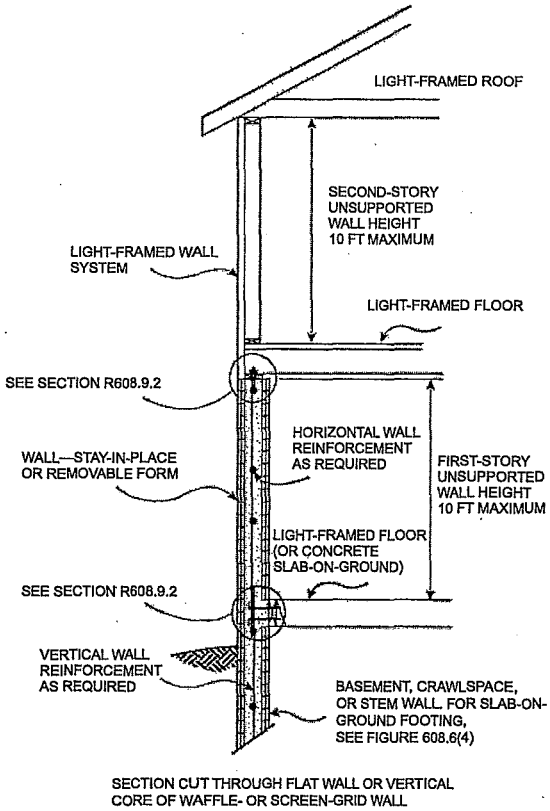

For SI: 1 foot = 304.8 mm.

FIGURE R608.6(2)
ABOVE-GRADE CONCRETE WALL CONSTRUCTION CONCRETE FIRST STORY AND LIGHT-FRAMED SECOND STORY

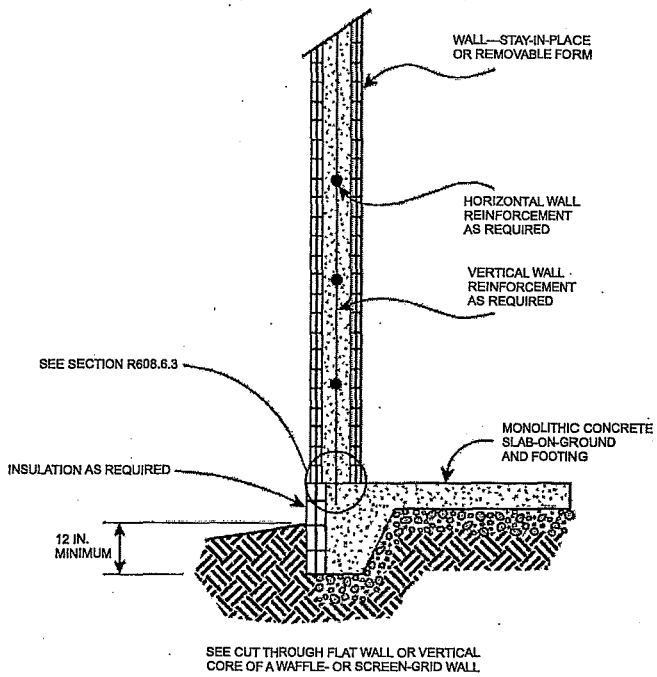

For SI: 1 inch = 25.4 mm.

FIGURE R608.6(4)
ABOVE-GRADE CONCRETE WALL SUPPORTED ON MONOLITHIC SLAB-ON-GROUND FOOTING

2732

TABLE R608.6(1)
MINIMUM VERTICAL REINFORCEMENT FOR FLAT ABOVE-GRADE WALLS[a, b, c, d, e]

MAXIMUM WIND SPEED (mph)			MAXIMUM UNSUPPORTED WALL HEIGHT PER STORY (feet)	MINIMUM VERTICAL REINFORCEMENT-BAR SIZE AND SPACING (inches)[f, g]							
				Nominal[h] wall thickness (inches)							
Exposure Category				4		6		8		10	
B	C	D		Top[i]	Side[i]	Top[i]	Side[i]	Top[i]	Side[i]	Top[i]	Side[i]
115			8	4@48	4@48	4@48	4@48	4@48	4@48	4@48	4@48
			9	4@48	4@39	4@48	4@48	4@48	4@48	4@48	4@48
			10	4@41	4@34	4@48	4@48	4@48	4@48	4@48	4@48
120			8	4@48	4@43	4@48	4@48	4@48	4@48	4@48	4@48
			9	4@48	4@36	4@48	4@48	4@48	4@48	4@48	4@48
			10	4@37	4@34	4@48	4@48	4@48	4@48	4@48	4@48
130	110		8	4@48	4@38	4@48	4@48	4@48	4@48	4@48	4@48
			9	4@39	4@34	4@48	4@48	4@48	4@48	4@48	4@48
			10	4@34	4@34	4@48	4@48	4@48	4@48	4@48	4@48
140	119	110	8	4@43	4@34	4@48	4@48	4@48	4@48	4@48	4@48
			9	4@34	4@34	4@48	4@48	4@48	4@48	4@48	4@48
			10	4@34	4@31	4@48	4@48	4@48	4@48	4@48	4@48
150	127	117	8	4@37	4@34	4@48	4@48	4@48	4@48	4@48	4@48
			9	4@34	4@33	4@48	4@48	4@48	4@48	4@48	4@48
			10	4@31	4@27	4@48	4@48	4@48	4@48	4@48	4@48
160	136	125	8	4@34	4@34	4@48	4@48	4@48	4@48	4@48	4@48
			9	4@34	4@29	4@48	4@48	4@48	4@48	4@48	4@48
			10	4@27	4@24	4@48	4@48	4@48	4@48	4@48	4@48

For SI: 1 inch = 25.4 mm, 1 foot = 304.8 mm, 1 mile per hour = 0.447 m/s, 1 pound per square inch = 1.895 kPa, 1 square foot = 0.0929 m^2.

a. Table is based on ASCE 7 components and cladding wind pressures for an enclosed building using a mean roof height of 35 feet, interior wall area 4, an effective wind area of 10 square feet, topographic factor, K_{zt}, equal to 1.0, and Risk Category II.

b. Table is based on concrete with a minimum specified compressive strength of 2,500 psi.

c. See Section R608.6.5 for location of reinforcement in wall.

d. Deflection criterion is $L/240$, where L is the unsupported height of the wall in inches.

e. Interpolation is not permitted.

f. Where No. 4 reinforcing bars at a spacing of 48 inches are specified in the table as indicated by shaded cells, use of bars with a minimum yield strength of 40,000 psi or 60,000 psi is permitted.

g. Other than for No. 4 bars spaced at 48 inches on center, table values are based on reinforcing bars with a minimum yield strength of 60,000 psi. Vertical reinforcement with a yield strength of less than 60,000 psi or bars of a different size than specified in the table are permitted in accordance with Section R608.5.4.7 and Table R608.5.4(2).

h. See Table R608.3 for tolerances on nominal thicknesses.

i. "Top" means gravity load from roof or floor construction bears on top of wall. "Side" means gravity load from floor construction is transferred to wall from a wood ledger or cold-formed steel track bolted to side of wall. For nonload-bearing walls where floor framing members span parallel to the wall, use of the "Top" bearing condition is permitted.

TABLE R608.6(2)
MINIMUM VERTICAL REINFORCEMENT FOR WAFFLE-GRID ABOVE-GRADE WALLS[a, b, c, d, e]

MAXIMUM WIND SPEED (mph)			MAXIMUM UNSUPPORTED WALL HEIGHT PER STORY (feet)	MINIMUM VERTICAL REINFORCEMENT-BAR SIZE AND SPACING (inches)[f, g]			
				Nominal[h] wall thickness (inches)			
Exposure Category				6		8	
B	C	D		Top[i]	Side[i]	Top[i]	Side[i]
115			8	4@48	4@48	4@48	4@48
			9	4@48	5@43	4@48	4@48
			10	5@47	5@37	4@48	4@48
120			8	4@48	5@48	4@48	4@48
			9	4@48	5@40	4@48	4@48
			10	5@43	5@37	4@48	4@48
130	110		8	4@48	5@42	4@48	4@48
			9	5@45	5@37	4@48	4@48
			10	5@37	5@37	4@48	4@48
140	119	110	8	4@48	5@38	4@48	4@48
			9	5@39	5@37	4@48	4@48
			10	5@37	5@35	4@48	4@48
150	127	117	8	5@43	5@37	4@48	4@48
			9	5@37	5@37	4@48	4@48
			10	5@36	6@44	4@48	4@48
160	136	125	8	5@38	5@37	4@48	4@48
			9	5@37	6@47	4@48	4@48
			10	6@45	6@39	4@48	6@46

For SI: 1 inch = 25.4 mm, 1 foot = 304.8 mm, 1 mile per hour = 0.447 m/s, 1 pound per square inch = 6.895 kPa, 1 square foot = 0.0929 m^2.

a. Table is based on ASCE 7 components and cladding wind pressures for an enclosed building using a mean roof height of 35 feet, interior wall area 4, an effective wind area of 10 square feet, topographic factor, K_{zt}, equal to 1.0, and Risk Category II.

b. Table is based on concrete with a minimum specified compressive strength of 2,500 psi.

c. See Section R608.6.5 for location of reinforcement in wall.

d. Deflection criterion is $L/240$, where L is the unsupported height of the wall in inches.

e. Interpolation is not permitted.

f. Where No. 4 reinforcing bars at a spacing of 48 inches are specified in the table as indicated by shaded cells, use of bars with a minimum yield strength of 40,000 psi or 60,000 psi is permitted.

g. Other than for No. 4 bars spaced at 48 inches on center, table values are based on reinforcing bars with a minimum yield strength of 60,000 psi. Maximum spacings shown are the values calculated for the specified bar size. Where the bar used is Grade 60 and the size specified in the table, the actual spacing in the wall shall not exceed a whole-number multiple of 12 inches such as, 12, 24, 36 and 48, that is less than or equal to the tabulated spacing. Vertical reinforcement with a yield strength of less than 60,000 psi or bars of a different size than specified in the table are permitted in accordance with Section R608.5.4.7 and Table R608.5.4(2).

h. See Table R608.3 for minimum core dimensions and maximum spacing of horizontal and vertical cores.

i. "Top" means gravity load from roof or floor construction bears on top of wall. "Side" means gravity load from floor construction is transferred to wall from a wood ledger or cold-formed steel track bolted to side of wall. For nonload-bearing walls and where floor framing members span parallel to the wall, the "top" bearing condition is permitted to be used.

TABLE R608.6(3)
MINIMUM VERTICAL REINFORCEMENT FOR 6-INCH SCREEN-GRID ABOVE-GRADE WALLS[a, b, c, d, e]

MAXIMUM WIND SPEED (mph)			MAXIMUM UNSUPPORTED WALL HEIGHT PER STORY (feet)	MINIMUM VERTICAL REINFORCEMENT-BAR SIZE AND SPACING (inches)[f, g]	
				Nominal[h] wall thickness (inches)	
Exposure Category				6	
B	C	D		Top[i]	Side[i]
115			8	4@48	4@48
			9	4@48	5@41
			10	4@48	6@48
120			8	4@48	4@48
			9	4@48	5@38
			10	5@42	6@48
130	110		8	4@48	5@41
			9	5@44	6@48
			10	5@35	6@48
140	119	110	8	4@48	5@36
			9	5@38	6@48
			10	6@48	6@48
150	127	117	8	5@42	6@48
			9	6@48	6@48
			10	6@48	6@42
160	136	125	8	5@37	6@48
			9	6@48	6@45
			10	6@44	6@38

For SI: 1 inch = 25.4 mm, 1 foot = 304.8 mm, 1 mile per hour = 0.447 m/s, 1 pound per square inch = 6.895 kPa, 1 square foot = 0.0929 m^2.

a. Table is based on ASCE 7 components and cladding wind pressures for an enclosed building using a mean roof height of 35 feet, interior wall area 4, an effective wind area of 10 square feet, topographic factor, K_{zt}, equal to 1.0, and Risk Category II.

b. Table is based on concrete with a minimum specified compressive strength of 2,500 psi.

c. See Section R608.6.5 for location of reinforcement in wall.

d. Deflection criterion is $L/240$, where L is the unsupported height of the wall in inches.

e. Interpolation is not permitted.

f. Where No. 4 reinforcing bars at a spacing of 48 inches are specified in the table as indicated by shaded cells, use of bars with a minimum yield strength of 40,000 psi or 60,000 psi is permitted.

g. Other than for No. 4 bars spaced at 48 inches on center, table values are based on reinforcing bars with a minimum yield strength of 60,000 psi. Maximum spacings shown are the values calculated for the specified bar size. Where the bar used is Grade 60 and the size specified in the table, the actual spacing in the wall shall not exceed a whole-number multiple of 12 inches such as, 12, 24, 36 and 48, that is less than or equal to the tabulated spacing. Vertical reinforcement with a yield strength of less than 60,000 psi or bars of a different size than specified in the table are permitted in accordance with Section R608.5.4.7 and Table R608.5.4(2).

h. See Table R608.3 for minimum core dimensions and maximum spacing of horizontal and vertical cores.

i. "Top" means gravity load from roof or floor construction bears on top of wall. "Side" means gravity load from floor construction is transferred to wall from a wood ledger or cold-formed steel track bolted to side of wall. For nonload-bearing wall and where floor framing members span parallel to the wall, use of the "Top" bearing condition is permitted.

TABLE R608.6(4)
MINIMUM VERTICAL REINFORCEMENT FOR FLAT, WAFFLE- AND SCREEN-GRID ABOVE-GRADE WALLS DESIGNED CONTINUOUS WITH FOUNDATION STEM WALLS[a, b, c, d, e, k, l]

MAXIMUM WIND SPEED (mph)			HEIGHT OF STEM WALL[h, i] (feet)	MAXIMUM DESIGN LATERAL SOIL LOAD (psf/ft)	MAXIMUM UNSUPPORTED HEIGHT OF ABOVE-GRADE WALL (feet)	MINIMUM VERTICAL REINFORCEMENT-BAR SIZE AND SPACING (inches)[f, g]						
						Wall type and nominal thickness[j] (inches)						
Exposure Category						Flat				Waffle		Screen
B	C	D				4	6	8	10	6	8	6
115			3	30	8	4@30	4@48	4@48	4@48	4@22	4@26	4@21
					10	4@23	5@43	4@48	4@48	4@17	4@20	4@16
				60	10	4@19	5@37	4@48	4@48	4@14	4@17	4@14
			6	30	10	DR	5@21	6@35	4@48	DR	4@10	DR
				60	10	DR	5@12	6@25	6@28	DR	DR	DR
120			3	30	8	4@28	4@48	4@48	4@48	4@21	4@48	4@20
					10	4@22	5@41	4@48	4@48	4@16	4@19	4@15
				60	10	4@18	5@35	4@48	4@48	4@14	4@17	4@13
			6	30	10	DR	5@21	6@35	4@48	DR	4@10	DR
				60	10	DR	5@12	6@25	6@28	DR	DR	DR
130	110		3	30	8	4@25	4@48	4@48	4@48	4@18	4@22	4@18
					10	4@19	5@36	4@48	4@48	4@14	4@17	4@13
			6	60	10	4@16	5@34	4@48	4@48	4@12	4@17	4@12
				30	10	DR	5@19	6@35	4@48	DR	4@9	DR
				60	10	DR	5@12	6@24	6@28	DR	DR	DR
140	119	110	3	30	8	4@22	5@42	4@48	4@48	4@16	4@20	4@16
					10	4@17	5@34	4@48	4@48	4@21	4@17	4@12
				60	10	4@15	5@34	4@48	4@48	4@11	4@17	4@10
			6	30	10	DR	5@18	6@35	6@35	DR	4@48	DR
				60	10	DR	5@11	6@23	6@28	DR	DR	DR
150	127	117	3	30	8	4@20	5@37	4@48	4@48	4@15	4@18	4@14
					10	4@15	5@34	4@48	4@48	4@11	4@17	4@11
				60	10	4@13	5@34	4@48	4@48	4@10	4@16	4@9
			6	30	10	DR	5@17	6@33	6@32	DR	4@8	DR
				60	10	DR	DR	6@22	6@28	DR	DR	DR
160	136	125	3	30	8	4@18	5@34	4@48	4@48	4@13	4@17	4@13
					10	4@13	5@34	4@48	4@48	4@10	4@16	4@9
				60	10	4@11	5@31	6@45	4@48	4@9	4@14	4@8
			6	30	10	DR	5@15	6@31	6@30	DR	4@7	DR
				60	10	DR	DR	6@21	6@27	DR	DR	DR

For SI: 1 inch = 25.4 mm, 1 foot = 304.8 mm, 1 mile per hour = 0.447 m/s, 1 pound per square inch = 6.895 kPa, 1 square foot = 0.0929 m^2.

a. Table is based on ASCE 7 components and cladding wind pressures for an enclosed building using a mean roof height of 35 feet, interior wall area 4, an effective wind area of 10 square feet, topographic factor, K_{zt}, equal to 1.0, and Risk Category II.

b. Table is based on concrete with a minimum specified compressive strength of 2,500 psi.

c. See Section R608.6.5 for location of reinforcement in wall.

d. Deflection criterion is $L/240$, where L is the height of the wall in inches from the exterior finish ground level to the top of the above-grade wall.

e. Interpolation is not permitted. For intermediate values of basic wind speed, heights of stem wall and above-grade wall, and design lateral soil load, use next higher value.

f. Where No. 4 reinforcing bars at a spacing of 48 inches are specified in the table as indicated by shaded cells, use of bars with a minimum yield strength of 40,000 psi or 60,000 psi is permitted.

g. Other than for No. 4 bars spaced at 48 inches on center, table values are based on reinforcing bars with a minimum yield strength of 60,000 psi. Maximum spacings shown are the values calculated for the specified bar size. In waffle and screen-grid walls where the bar used is Grade 60 and the size specified in the table, the actual spacing in the wall shall not exceed a whole-number multiple of 12 inches such as, 12, 24, 36 and 48, that is less than or equal to the tabulated spacing. Vertical reinforcement with a yield strength of less than 60,000 psi and/or bars of a different size than specified in the table are permitted in accordance with Section R608.5.4.7 and Table R608.5.4(2).

h. Height of stem wall is the distance from the exterior finish ground level to the top of the slab-on-ground.

i. Where the distance from the exterior finish ground level to the top of the slab-on-ground is equal to or greater than 4 feet, the stem wall shall be laterally supported at the top and bottom before backfilling. Where the wall is designed and constructed to be continuous with the above-grade wall, temporary supports bracing the top of the stem wall shall remain in place until the above-grade wall is laterally supported at the top by floor or roof construction.

j. See Table R608.3 for tolerances on nominal thicknesses, and minimum core dimensions and maximum spacing of horizontal and vertical cores for waffle- and screen-grid walls.

k. Tabulated values are applicable to construction where gravity loads bear on top of wall, and conditions where gravity loads from floor construction are transferred to wall from a wood ledger or cold-formed steel track bolted to side of wall. See Tables R608.6(1), R608.6(2) and R608.6(3).

l. DR = Design Required.

R608.6.4 Termination of reinforcement. Where indicated in Items 1 through 3, vertical wall reinforcement in the top-most *story* with concrete walls shall be terminated with a 90-degree (1.57 rad) standard hook complying with Section R608.5.4.5 and Figure R608.5.4(3).

1. Vertical bars adjacent to door and window openings required by Section R608.8.1.2.
2. Vertical bars at the ends of required solid wall segments (see Section R608.7.2.2.2).
3. Vertical bars (other than end bars, see Item 2) used as shear reinforcement in required solid wall segments where the reduction factor for design strength, R_3, used is based on the wall having horizontal and vertical shear reinforcement (see Section R608.7.2.2.3).

The bar extension of the hook shall be oriented parallel to the horizontal wall reinforcement and be within 4 inches (102 mm) of the top of the wall.

Horizontal reinforcement shall be continuous around the building corners by bending one of the bars and lap-splicing it with the bar in the other wall in accordance with Section R608.5.4.3 and Figure R608.5.4(1).

Exception: In lieu of bending horizontal reinforcement at corners, separate bent reinforcing bars shall be permitted provided that the bent bar is lap-spliced with the horizontal reinforcement in both walls in accordance with Section R608.5.4.3 and Figure R608.5.4(1).

In required solid wall segments where the reduction factor for design strength, R_3, is based on the wall having horizontal and vertical shear reinforcement in accordance with Section R608.7.2.2.1, horizontal wall reinforcement shall be terminated with a standard hook complying with Section R608.5.4.5 and Figure R608.5.4(3) or in a lap-splice, except at corners where the reinforcement shall be continuous as required.

R608.6.5 Location of reinforcement in wall. Except for vertical reinforcement at the ends of required solid wall segments, which shall be located as required by Section R608.7.2.2.2, the location of the vertical reinforcement shall not vary from the center of the wall by more than the greater of 10 percent of the wall thickness and $^3/_8$-inch (10 mm). Horizontal and vertical reinforcement shall be located to provide not less than the minimum cover required by Section R608.5.4.1.

R608.7 Solid walls for resistance to lateral forces.

R608.7.1 Length of solid wall. Each exterior wall line in each *story* shall have a total length of solid wall required by Section R608.7.1.1. A solid wall is a section of flat, waffle-grid or screen-grid wall, extending the full *story height* without openings or penetrations, except those permitted by Section R608.7.2. Solid wall segments that contribute to the total length of solid wall shall comply with Section R608.7.2.

R608.7.1.1 Length of solid wall for wind. Buildings shall have solid walls in each exterior endwall line (the side of a building that is parallel to the span of the roof or floor framing) and sidewall line (the side of a building that is perpendicular to the span of the roof or floor framing) to resist lateral in-plane wind forces. The site-appropriate basic wind speed and exposure category shall be used in Tables R608.7(1A) through (1C) to determine the unreduced total length, *UR*, of solid wall required in each exterior endwall line and sidewall line. For buildings with a mean roof height of less than 35 feet (10 668 mm), the unreduced values determined from Tables R608.7(1A) though (1C) are permitted to be reduced by multiplying by the applicable factor, R_1, from Table R608.7(2); however, reduced values shall be not less than the minimum values in Tables R608.7(1A) through (1C). Where the floor-to-ceiling height of a *story* is less than 10 feet (3048 mm), the unreduced values determined from Tables R608.7(1A) through (C), including minimum values, are permitted to be reduced by multiplying by the applicable factor, R_2, from Table R608.7(3). To account for different design strengths than assumed in determining the values in Tables R608.7(1A) through (1C), the unreduced lengths determined from Tables R608.7(1A) through (1C), including minimum values, are permitted to be reduced by multiplying by the applicable factor, R_3, from Table R608.7(4). The reductions permitted by Tables R608.7(2), R608.7(3) and R608.7(4) are cumulative.

The total length of solid wall segments, *TL*, in a wall line that comply with the minimum length requirements of Section R608.7.2.1 [see Figure R608.7(1)] shall be equal to or greater than the product of the unreduced length of solid wall from Tables R608.7(1A) through (1C), *UR* and the applicable reduction factors, if any, from Tables R608.7(2), R608.7(3) and R608.7(4) as indicated by Equation R6-1.

$$TL \geq R_1 \cdot R_2 \cdot R_3 \cdot UR \qquad \textbf{(Equation R6-1)}$$

where:

TL = Total length of solid wall segments in a wall line that comply with Section R608.7.2.1 [see Figure R608.7(1)].

R_1 = 1.0 or reduction factor for mean roof height from Table R608.7(2).

R_2 = 1.0 or reduction factor for floor-to-ceiling wall height from Table R608.7(3).

R_3 = 1.0 or reduction factor for design strength from Table R608.7(4).

UR = Unreduced length of solid wall from Tables R608.7(1A) through (1C).

The total length of solid wall in a wall line, *TL*, shall be not less than that provided by two solid wall segments complying with the minimum length requirements of Section R608.7.2.1.

To facilitate determining the required wall thickness, wall type, number and *grade* of vertical bars at each end of each solid wall segment, and whether shear reinforcement is required, use of Equation R6-2 is permitted.

$$R \leq \frac{TL}{R_1 \cdot R_2 \cdot UR} \qquad \textbf{(Equation R6-2)}$$

After determining the maximum permitted value of the reduction factor for design strength, R_3, in accordance with Equation R6-2, select a wall type from Table R608.7(4) with R_3 less than or equal to the value calculated.

R608.7.2 Solid wall segments. Solid wall segments that contribute to the required length of solid wall shall comply with this section. Reinforcement shall be provided in accordance with Section R608.7.2.2 and Table R608.7(4). Solid wall segments shall extend the full story-height without openings, other than openings for the utilities and other building services passing through the wall. In flat walls and waffle-grid walls, such openings shall have an area of less than 30 square inches (19 355 mm^2) without any dimension exceeding $6^1/_4$ inches (159 mm), and shall not be located within 6 inches (152 mm) of the side edges of the solid wall segment. In screen-grid walls, such openings shall be located in the portion of the solid wall segment between horizontal and vertical cores of concrete and opening size and location are not restricted provided there is not any concrete removed.

TABLE R608.7(1A)
UNREDUCED LENGTH, *UR*, OF SOLID WALL REQUIRED IN EACH EXTERIOR ENDWALL FOR WIND PERPENDICULAR TO RIDGE ONE STORY OR TOP STORY OF TWO STORY[a, c, d, e, f, g]

SIDEWALL LENGTH (feet)	ENDWALL LENGTH (feet)	ROOF SLOPE	UNREDUCED LENGTH, *UR*, OF SOLID WALL REQUIRED IN ENDWALLS FOR WIND PERPENDICULAR TO RIDGE (feet)						
			Basic Wind Speed (mph) Exposure						
			115B	120B	130B	140B	150B	160B	Minimum[b]
					110C	119C	127C	136C	
						110D	117D	125D	
15	15	< 1:12	1.03	1.12	1.32	1.53	1.76	2.00	0.92
		5:12	1.43	1.56	1.83	2.12	2.43	2.77	1.15
		7:12	2.00	2.18	2.56	2.97	3.41	3.88	1.25
		12:12	3.20	3.48	4.09	4.74	5.44	6.19	1.54
	30	< 1:12	1.03	1.12	1.32	1.53	1.76	2.00	0.98
		5:12	1.43	1.56	1.83	2.12	2.43	2.77	1.43
		7:12	2.78	3.03	3.56	4.13	4.74	5.39	1.64
		12:12	5.17	5.63	6.61	7.67	8.80	10.01	2.21
	45	< 1:12	1.03	1.12	1.32	1.53	1.76	2.00	1.04
		5:12	1.43	1.56	1.83	2.12	2.43	2.77	1.72
		7:12	3.57	3.88	4.56	5.28	6.07	6.90	2.03
		12:12	7.15	7.78	9.13	10.59	12.16	13.84	2.89
	60	< 1:12	1.03	1.12	1.32	1.53	1.76	2.00	1.09
		5:12	1.43	1.56	1.83	2.12	2.43	2.77	2.01
		7:12	4.35	4.73	5.55	6.44	7.39	8.41	2.42
		12:12	9.12	9.93	11.66	13.52	15.52	17.66	3.57
30	15	< 1:12	1.84	2.01	2.35	2.73	3.13	3.57	1.82
		5:12	2.56	2.78	3.27	3.79	4.35	4.95	2.23
		7:12	3.61	3.93	4.61	5.34	6.13	6.98	2.42
		12:12	5.61	6.10	7.16	8.31	9.54	10.85	2.93
	30	< 1:12	1.84	2.01	2.35	2.73	3.13	3.57	1.93
		5:12	2.56	2.78	3.27	3.79	4.35	4.95	2.75
		7:12	4.92	5.35	6.28	7.29	8.37	9.52	3.12
		12:12	8.92	9.71	11.39	13.22	15.17	17.26	4.14
	45	< 1:12	1.84	2.01	2.35	2.73	3.13	3.57	2.03
		5:12	2.56	2.78	3.27	3.79	4.35	4.95	3.26
		7:12	6.23	6.78	7.96	9.23	10.60	12.06	3.82
		12:12	12.23	13.31	15.63	18.12	20.80	23.67	5.36
	60	< 1:12	1.84	2.01	2.35	2.73	3.13	3.57	2.14
		5:12	2.56	2.78	3.27	3.79	4.35	4.95	3.78
		7:12	7.54	8.21	9.64	11.17	12.83	14.60	4.52
		12:12	15.54	16.92	19.86	23.03	26.44	30.08	6.57

(continued)

2738

TABLE R608.7(1A)—continued
UNREDUCED LENGTH, *UR*, OF SOLID WALL REQUIRED IN EACH EXTERIOR ENDWALL FOR WIND PERPENDICULAR TO RIDGE ONE STORY OR TOP STORY OF TWO STORY[a, c, d, e, f, g]

SIDEWALL LENGTH (feet)	ENDWALL LENGTH (feet)	ROOF SLOPE	UNREDUCED LENGTH, *UR*, OF SOLID WALL REQUIRED IN ENDWALLS FOR WIND PERPENDICULAR TO RIDGE (feet)						
			Basic Wind Speed (mph) Exposure						
			115B	120B	130B	140B	150B	160B	Minimum[b]
					110C	119C	127C	136C	
						110D	117D	125D	
60	15	< 1:12	3.42	3.72	4.36	5.06	5.81	6.61	3.63
		5:12	4.75	5.17	6.06	7.03	8.07	9.19	4.40
		7:12	6.76	7.36	8.64	10.02	11.51	13.09	4.75
		12:12	10.35	11.27	13.23	15.34	17.61	20.04	5.71
	30	< 1:12	3.42	3.72	4.36	5.06	5.81	6.61	3.83
		5:12	4.75	5.17	6.06	7.03	8.07	9.19	5.37
		7:12	9.12	9.93	11.66	13.52	15.52	17.66	6.07
		12:12	16.30	17.75	20.83	24.16	27.73	31.55	8.00
	45	< 1:12	3.55	3.87	4.54	5.27	6.05	6.88	4.03
		5:12	4.94	5.37	6.31	7.31	8.40	9.55	6.34
		7:12	11.71	12.75	14.97	17.36	19.93	22.67	7.39
		12:12	22.70	24.71	29.00	33.64	38.62	43.94	10.29
	60	< 1:12	3.68	4.01	4.71	5.46	6.27	7.13	4.23
		5:12	5.11	5.57	6.54	7.58	8.70	9.90	7.31
		7:12	14.38	15.66	18.37	21.31	24.46	27.83	8.71
		12:12	29.30	31.90	37.44	43.42	49.85	56.72	12.57

For SI: 1 inch = 25.4 mm, 1 foot = 304.8 mm, 1 mile per hour = 0.447 m/s, 1 pound-force per linear foot = 0.146 kN/m, 1 pound per square foot = 47.88 Pa.

a. Tabulated lengths were derived by calculating design wind pressures in accordance with Figure 28.4-1 of ASCE 7 for a building with a mean roof height of 35 feet, topographic factor, K_{zt}, equal to 1.0, and Risk Category II. For wind perpendicular to the ridge, the effects of a 2-foot overhang on each endwall are included. The design pressures were used to calculate forces to be resisted by solid wall segments in each. The forces to be resisted by each wall line were then divided by the default design strength of 840 pounds per linear foot of length to determine the unreduced length, *UR*, of solid wall length required in each endwall. The actual mean roof height of the building shall not exceed the least horizontal dimension of the building.

b. Tabulated lengths in the "minimum" column are based on the requirement of Section 28.4.4 of ASCE 7 that the main windforce-resisting system be designed for a minimum pressure of 16 psf multiplied by the wall area of the building and 8 psf multiplied by the roof area of the building projected onto a vertical plane normal to the assumed wind direction. Tabulated lengths in shaded cells are less than the "minimum" value. Where the minimum controls, it is permitted to be reduced in accordance with Notes c, d and e. See Section R608.7.1.1.

c. For buildings with a mean roof height of less than 35 feet, tabulated lengths are permitted to be reduced by multiplying by the appropriate factor, R_1, from Table R608.7(2). The reduced length shall be not less than the "minimum" value shown in the table.

d. Tabulated lengths for "one story or top story of two story" are based on a floor-to-ceiling height of 10 feet. Tabulated lengths for "first story of two story" are based on floor-to-ceiling heights of 10 feet each for the first and second story. For floor-to-ceiling heights less than assumed, use the lengths in this table or Table R608.7 (1B) or (1C), or multiply the value in the table by the reduction factor, R_2, from Table R608.7(3).

e. Tabulated lengths are based on the default design shear strength of 840 pounds per linear foot of solid wall segment. The tabulated lengths are permitted to be reduced by multiplying by the applicable reduction factor for design strength, R_3, from Table R608.7(4).

f. The reduction factors, R_1, R_2 and R_3, in Tables R608.7(2), R608.7(3), and R608.7(4), respectively, are permitted to be compounded, subject to the limitations of Note b. However, the minimum number and minimum length of solid wall segments in each wall line shall comply with Sections R608.7.1 and R608.7.2.1, respectively.

g. For intermediate values of sidewall length, endwall length, roof slope and basic wind speed, use the next higher value, or determine by interpolation.

TABLE R608.7(1B)
UNREDUCED LENGTH, *UR*, OF SOLID WALL REQUIRED IN EACH EXTERIOR ENDWALL FOR WIND PERPENDICULAR TO RIDGE FIRST STORY OF TWO STORY[a, c, d, e, f, g]

SIDEWALL LENGTH (feet)	ENDWALL LENGTH (feet)	ROOF SLOPE	UNREDUCED LENGTH, *UR*, OF SOLID WALL REQUIRED IN ENDWALLS FOR WIND PERPENDICULAR TO RIDGE (feet)						
			Basic Wind Speed (mph) Exposure						
			115B	120B	130B	140B	150B	160B	Minimum[b]
					110C	119C	127C	136C	
						110D	117D	125D	
15	15	< 1:12	2.98	3.25	3.81	4.42	5.07	5.77	2.54
		5:12	4.13	4.50	5.28	6.12	7.03	8.00	2.76
		7:12	4.31	4.70	5.51	6.39	7.34	8.35	2.87
		12:12	5.51	6.00	7.04	8.16	9.37	10.66	3.15
	30	< 1:12	2.98	3.25	3.81	4.42	5.07	5.77	2.59
		5:12	4.13	4.50	5.28	6.12	7.03	8.00	3.05
		7:12	5.09	5.55	6.51	7.55	8.67	9.86	3.26
		12:12	7.48	8.15	9.56	11.09	12.73	14.49	3.83
	45	< 1:12	2.98	3.25	3.81	4.42	5.07	5.77	2.65
		5:12	4.13	4.50	5.28	6.12	7.03	8.00	3.34
		7:12	5.88	6.40	7.51	8.71	10.00	11.37	3.65
		12:12	9.46	10.30	12.09	14.02	16.09	18.31	4.51
	60	< 1:12	2.98	3.25	3.81	4.42	5.07	5.77	2.71
		5:12	4.13	4.50	5.28	6.12	7.03	8.00	3.63
		7:12	6.66	7.25	8.51	9.87	11.32	12.89	4.04
		12:12	11.43	12.45	14.61	16.94	19.45	22.13	5.19
30	15	< 1:12	5.32	5.79	6.80	7.89	9.05	10.30	5.06
		5:12	7.39	8.04	9.44	10.95	12.57	14.30	5.47
		7:12	7.94	8.65	10.15	11.77	13.51	15.37	5.65
		12:12	9.94	10.82	12.70	14.73	16.91	19.24	6.17
	30	< 1:12	5.32	5.79	6.80	7.89	9.05	10.30	5.16
		5:12	7.39	8.04	9.44	10.95	12.57	14.30	5.98
		7:12	9.25	10.07	11.82	13.71	15.74	17.91	6.35
		12:12	13.25	14.43	16.93	19.64	22.54	25.65	7.38
	45	< 1:12	5.32	5.79	6.80	7.89	9.05	10.30	5.27
		5:12	7.39	8.04	9.44	10.95	12.57	14.30	6.50
		7:12	10.56	11.50	13.50	15.65	17.97	20.45	7.06
		12:12	16.56	18.03	21.16	24.55	28.18	32.06	8.60
	60	< 1:12	5.32	5.79	6.80	7.89	9.05	10.30	5.38
		5:12	7.39	8.04	9.44	10.95	12.57	14.30	7.01
		7:12	11.87	12.93	15.17	17.60	20.20	22.98	7.76
		12:12	19.87	21.64	25.40	29.45	33.81	38.47	9.81

(continued)

TABLE R608.7(1B)—continued
UNREDUCED LENGTH, *UR*, OF SOLID WALL REQUIRED IN EACH EXTERIOR ENDWALL FOR WIND PERPENDICULAR TO RIDGE FIRST STORY OF TWO STORY[a, c, d, e, f, g]

SIDEWALL LENGTH (feet)	ENDWALL LENGTH (feet)	ROOF SLOPE	UNREDUCED LENGTH, *UR*, OF SOLID WALL REQUIRED IN ENDWALLS FOR WIND PERPENDICULAR TO RIDGE (feet)						
			Basic Wind Speed (mph) Exposure						
			115B	120B	130B	140B	150B	160B	Minimum[b]
					110C	119C	127C	136C	
						110D	117D	125D	
60	15	< 1:12	9.87	10.74	12.61	14.62	16.79	19.10	10.10
		5:12	13.71	14.93	17.52	20.32	23.33	26.54	10.87
		7:12	15.08	16.42	19.27	22.35	25.66	29.20	11.22
		12:12	18.67	20.33	23.86	27.67	31.77	36.14	12.19
	30	< 1:12	9.87	10.74	12.61	14.62	16.79	19.10	10.30
		5:12	13.71	14.93	17.52	20.32	23.33	26.54	11.85
		7:12	17.44	18.99	22.29	25.85	29.67	33.76	12.54
		12:12	24.62	26.81	31.46	36.49	41.89	47.66	14.48
	45	< 1:12	10.27	11.18	13.12	15.21	17.47	19.87	10.50
		5:12	14.26	15.52	18.22	21.13	24.26	27.60	12.82
		7:12	20.21	22.01	25.83	29.95	34.39	39.12	13.86
		12:12	31.20	33.97	39.87	46.23	53.07	60.39	16.76
	60	< 1:12	10.64	11.59	13.60	15.77	18.11	20.60	10.70
		5:12	14.77	16.09	18.88	21.90	25.14	28.60	13.79
		7:12	23.05	25.09	29.45	34.15	39.21	44.61	15.18
		12:12	37.97	41.34	48.52	56.27	64.60	73.49	19.05

For SI: 1 inch = 25.4 mm, 1 foot = 304.8 mm, 1 mile per hour = 0.447 m/s, 1 pound force per linear foot = 0.146 kN/m, 1 pound per square foot = 47.88 Pa.

a. Tabulated lengths were derived by calculating design wind pressures in accordance with Figure 28.4-1 of ASCE 7 for a building with a mean roof height of 35 feet, topographic factor, K_{zt}, equal to 1.0, and Risk Category II. For wind perpendicular to the ridge, the effects of a 2-foot overhang on each endwall are included. The design pressures were used to calculate forces to be resisted by solid wall segments in each endwall. The forces to be resisted by each wall line were then divided by the default design strength of 840 pounds per linear foot of length to determine the unreduced length, *UR*, of solid wall length required in each endwall. The actual mean roof height of the building shall not exceed the least horizontal dimension of the building.

b. Tabulated lengths in the "minimum" column are based on the requirement of Section 28.4.4 of ASCE 7 that the main windforce-resisting system be designed for a minimum pressure of 1016 psf multiplied by the wall area of the building and 8 psf multiplied by the roof area of the building projected onto a vertical plane normal to the assumed wind direction. Tabulated lengths in shaded cells are less than the "minimum" value. Where the minimum controls, it is permitted to be reduced in accordance with Notes c, d and e. See Section R608.7.1.1.

c. For buildings with a mean roof height of less than 35 feet, tabulated lengths are permitted to be reduced by multiplying by the appropriate factor, R_1, from Table R608.7(2). The reduced length shall be not less than the "minimum" value shown in the table.

d. Tabulated lengths for "one story or top story of two story" are based on a floor-to-ceiling height of 10 feet. Tabulated lengths for "first story of two story" are based on floor-to-ceiling heights of 10 feet each for the first and second story. For floor-to-ceiling heights less than assumed, use the lengths in this table or Table R608.7(1A) or (1C), or multiply the value in the table by the reduction factor, R_2, from Table R608.7(3).

e. Tabulated lengths are based on the default design shear strength of 840 pounds per linear foot of solid wall segment. The tabulated lengths are permitted to be reduced by multiplying by the applicable reduction factor for design strength, R_3, from Table R608.7(4).

f. The reduction factors, R_1, R_2 and R_3, in Tables R608.7(2), R608.7(3), and R608.7(4), respectively, are permitted to be compounded, subject to the limitations of Note b. However, the minimum number and minimum length of solid wall segments in each wall line shall comply with Sections R608.7.1 and R608.7.2.1, respectively.

g. For intermediate values of sidewall length, endwall length, roof slope and basic wind speed, use the next higher value, or determine by interpolation.

TABLE R608.7(1C)
UNREDUCED LENGTH, *UR*, OF SOLID WALL REQUIRED IN EACH EXTERIOR SIDEWALL FOR WIND PARALLEL TO RIDGE[a, c, d, e, f, g]

SIDEWALL LENGTH (feet)	ENDWALL LENGTH (feet)	ROOF SLOPE	UNREDUCED LENGTH, *UR*, OF SOLID WALL REQUIRED IN SIDEWALLS FOR WIND PARALLEL TO RIDGE (feet)						
			Basic Wind Speed (mph) Exposure						
			115B	120B	130B	140B	150B	160B	Minimum[b]
					110C	119C	127C	136C	
						110D	117D	125D	
			One story or top story of two story						
< 30	15	< 1:12	1.08	1.18	1.39	161	1.84	2.10	0.90
		5:12	1.29	1.40	1.65	1.91	2.19	2.49	1.08
		7:12	1.38	1.50	1.76	2.04	2.35	2.67	1.17
		12:12	1.63	1.78	2.09	2.42	2.78	3.16	1.39
	30	< 1:12	2.02	2.20	2.59	3.00	3.44	3.92	1.90
		5:12	2.73	2.97	3.48	4.04	4.64	5.28	2.62
		7:12	3.05	3.32	3.89	4.51	5.18	5.89	2.95
		12:12	3.93	4.27	5.02	5.82	6.68	7.60	3.86
	45	< 1:12	3.03	3.30	3.87	4.49	5.15	5.86	2.99
		5:12	4.55	4.96	5.82	6.75	7.74	8.81	4.62
		7:12	5.24	5.71	6.70	7.77	8.92	10.15	5.36
		12:12	7.16	7.79	9.14	10.61	12.17	13.85	7.39
	60	< 1:12	4.11	4.47	5.25	6.09	6.99	7.96	4.18
		5:12	6.78	7.39	8.67	10.05	11.54	13.13	7.07
		7:12	8.00	8.71	10.22	11.85	13.61	15.48	8.38
		12:12	11.35	12.36	14.51	16.82	19.31	21.97	12.00
60	45	< 1:12	3.17	3.46	4.06	4.70	5.40	6.14	2.99
		5:12	4.75	5.18	6.07	7.04	8.09	9.20	4.62
		7:12	5.47	5.96	6.99	8.11	9.31	10.59	5.36
		12:12	7.45	8.11	9.52	11.04	12.68	14.43	7.39
	60	< 1:12	4.41	4.81	5.64	6.54	7.51	8.54	4.18
		5:12	7.22	7.86	9.23	10.70	12.29	13.98	7.07
		7:12	8.50	9.25	10.86	12.59	14.46	16.45	8.38
		12:12	12.02	13.09	15.36	17.81	20.45	23.27	12.00

(continued)

TABLE R608.7(1C)—continued
UNREDUCED LENGTH, *UR*, OF SOLID WALL REQUIRED IN EACH EXTERIOR SIDEWALL FOR WIND PARALLEL TO RIDGE[a, c, d, e, f, g]

SIDEWALL LENGTH (feet)	ENDWALL LENGTH (feet)	ROOF SLOPE	UNREDUCED LENGTH, *UR*, OF SOLID WALL REQUIRED IN SIDEWALLS FOR WIND PARALLEL TO RIDGE (feet)						
			Basic Wind Speed Exposure (mph)						
			115B	120B	130B	140B	150B	160B	Minimum[b]
					110C	119C	127C	136C	
						110D	117D	125D	
			First story of two story						
< 30	15	< 1:12	3.03	3.30	3.88	4.49	5.16	5.87	2.52
		5:12	3.24	3.52	4.14	4.80	5.51	6.26	2.70
		7:12	3.33	3.62	4.25	4.93	5.66	6.44	2.79
		12:12	3.58	3.90	4.58	5.31	6.10	6.94	3.01
	30	< 1:12	5.50	5.99	7.03	8.16	9.36	10.65	5.14
		5:12	6.21	6.76	7.93	9.20	10.56	12.01	5.86
		7:12	6.52	7.10	8.34	9.67	11.10	12.63	6.19
		12:12	7.41	8.06	9.46	10.97	12.60	14.33	7.10
	45	< 1:12	8.00	8.71	10.22	11.85	13.61	15.48	7.85
		5:12	9.52	10.37	12.17	14.11	16.20	18.43	9.48
		7:12	10.21	11.12	13.05	15.14	17.38	19.77	10.21
		12:12	12.13	13.20	15.50	17.97	20.63	23.47	12.25
	60	< 1:12	10.56	11.50	13.50	15.65	17.97	20.44	10.65
		5:12	13.24	14.41	16.91	19.62	22.52	25.62	13.54
		7:12	14.45	15.73	18.46	21.41	24.58	27.97	14.85
		12:12	17.80	19.38	22.75	26.38	30.29	34.46	18.48
60	45	< 1:12	8.39	9.14	10.72	12.44	14.28	16.25	7.85
		5:12	9.97	10.86	12.74	14.78	16.97	19.30	9.48
		7:12	10.69	11.64	13.66	15.84	18.19	20.69	10.21
		12:12	12.67	13.80	16.19	18.78	21.56	24.53	12.25
	60	< 1:12	11.37	12.38	14.53	16.85	19.35	22.01	10.65
		5:12	14.18	15.44	18.12	21.02	24.13	27.45	13.54
		7:12	15.46	16.83	19.75	22.91	26.29	29.92	14.85
		12:12	18.98	20.66	24.25	28.13	32.29	36.74	18.48

For SI: 1 inch = 25.4 mm, 1 foot = 304.8 mm, 1 mile per hour = 0.447 m/s, 1 pound force per linear foot = 0.146 kN/m, 1 pound per square foot = 47.88 Pa.

a. Tabulated lengths were derived by calculating design wind pressures in accordance with Figure 28.4-1 of ASCE 7 for a building with a mean roof height of 35 feet, topographic factor, K_{zt}, equal to 1.0, and Risk Category II. The design pressures were used to calculate forces to be resisted by solid wall segments in each sidewall. The forces to be resisted by each wall line were then divided by the default design strength of 840 pounds per linear foot of length to determine the unreduced length, *UR*, of solid wall length required in each sidewall. The actual mean roof height of the building shall not exceed the least horizontal dimension of the building.

b. Tabulated lengths in the "minimum" column are based on the requirement of Section 28.4.4 of ASCE 7 that the main windforce-resisting system be designed for a minimum pressure of 16 psf multiplied by the wall area of the building and 8 psf multiplied by the roof area of the building projected onto a vertical plane normal to the assumed wind direction. Tabulated lengths in shaded cells are less than the "minimum" value. Where the minimum controls, it is permitted to be reduced in accordance with Notes c, d and e. See Section R608.7.1.1.

c. For buildings with a mean roof height of less than 35 feet, tabulated lengths are permitted to be reduced by multiplying by the appropriate factor, R_1, from Table R608.7(2). The reduced length shall be not less than the "minimum" value shown in the table.

d. Tabulated lengths for "one story or top story of two story" are based on a floor-to-ceiling height of 10 feet. Tabulated lengths for "first story of two story" are based on floor-to-ceiling heights of 10 feet each for the first and second story. For floor-to-ceiling heights less than assumed, use the lengths in this table or Table R608.7(1A) or (1B), or multiply the value in the table by the reduction factor, R_2, from Table R608.7(3).

e. Tabulated lengths are based on the default design shear strength of 840 pounds per linear foot of solid wall segment. The tabulated lengths are permitted to be reduced by multiplying by the applicable reduction factor for design strength, R_3, from Table R608.7(4).

f. The reduction factors, R_1, R_2 and R_3, in Tables R608.7(2), R608.7(3), and R608.7(4), respectively, are permitted to be compounded, subject to the limitations of Note b. However, the minimum number and minimum length of solid walls segments in each wall line shall comply with Sections R608.7.1 and R608.7.2.1, respectively.

g. For intermediate values of sidewall length, endwall length, roof slope and basic wind speed, use the next higher value, or determine by interpolation.

TABLE R608.7(2)
REDUCTION FACTOR, R_1, FOR BUILDINGS WITH MEAN ROOF HEIGHT LESS THAN 35 FEET[a]

MEAN ROOF HEIGHT[b, c] (feet)	REDUCTION FACTOR R_1, FOR MEAN ROOF HEIGHT		
	Exposure category		
	B	C	D
< 15	0.96	0.84	0.87
20	0.96	0.89	0.91
25	0.96	0.93	0.94
30	0.96	0.97	0.98
35	1.00	1.00	1.00

For SI: 1 foot = 304.8 mm, 1 degree = 0.0175 rad.

a. See Section R608.7.1.1 and Note c to Table R608.7(1A) for application of reduction factors in this table. This reduction is not permitted for "minimum" values.

b. For intermediate values of mean roof height, use the factor for the next greater height, or determine by interpolation.

c. Mean roof height is the average of the roof eave height and height of the highest point on the roof surface, except that for roof slopes of less than or equal to $2^1/_8$:12 (10 degrees), the mean roof height is permitted to be taken as the roof eave height.

TABLE R608.7(3)
REDUCTION FACTOR, R_2, FOR FLOOR-TO-CEILING WALL HEIGHTS LESS THAN 10 FEET[a, b]

STORY UNDER CONSIDERATION	FLOOR-TO-CEILING HEIGHT[c] (feet)	ENDWALL LENGTH (feet)	ROOF SLOPE	REDUCTION FACTOR, R_2
Endwalls—for wind perpendicular to ridge				
One story or top story of two story	8	15	< 5:12	0.83
			7:12	0.90
			12:12	0.94
		60	< 5:12	0.83
			7:12	0.95
			12:12	0.98
First story of two story	16 combined first and second story	15	< 5:12	0.83
			7:12	0.86
			12:12	0.89
		60	< 5:12	0.83
			7:12	0.91
			12:12	0.95
Sidewalls—for wind parallel to ridge				
One story or top story of two story	8	15	< 1:12	0.84
			5:12	0.87
			7:12	0.88
			12:12	0.89
		60	< 1:12	0.86
			5:12	0.92
			7:12	0.93
			12:12	0.95
First story of two story	16 combined first and second story	15	< 1:12	0.83
			5:12	0.84
			7:12	0.85
			12:12	0.86
		60	< 1:12	0.84
			5:12	0.87
			7:12	0.88
			12:12	0.90

For SI: 1 foot = 304.8 mm.

a. See Section R608.7.1.1 and Note d to Table R608.7(1A) for application of reduction factors in this table.

b. For intermediate values of endwall length, and/or roof slope, use the next higher value, or determine by interpolation.

c. Tabulated values in Table R608.7(1A) and (1C) for "one story or top story of two story" are based on a floor-to-ceiling height of 10 feet. Tabulated values in Table R608.7(1B) and (1C) for "first story of two story" are based on floor-to-ceiling heights of 10 feet each for the first and second story. For floor to ceiling heights between those shown in this table and those assumed in Table R608.7(1A), (1B) or (1C), use the solid wall lengths in Table R608.7(1A), (1B) or (1C), or determine the reduction factor by interpolating between 1.0 and the factor shown in this table.

TABLE R608.7(4)
REDUCTION FACTOR FOR DESIGN STRENGTH, R_3, FOR FLAT, WAFFLE- AND SCREEN-GRID WALLS[a, c]

NOMINAL THICKNESS OF WALL (inches)	VERTICAL BARS AT EACH END OF SOLID WALL SEGMENT		VERTICAL REINFORCEMENT LAYOUT DETAIL [see Figure R608.7(2)]	REDUCTION FACTOR, R_3, FOR LENGTH OF SOLID WALL			
				Horizontal and vertical shear reinforcement provided			
				No		Yes[d]	
	Number of bars	Bar size		40,000[b]	60,000[b]	40,000[b]	60,000[b]
Flat walls							
4	2	4	1	0.74	0.61	0.74	0.50
	3	4	2	0.61	0.61	0.52	0.27
	2	5	1	0.61	0.61	0.48	0.25
	3	5	2	0.61	0.61	0.26	0.18
6	2	4	3	0.70	0.48	0.70	0.48
	3	4	4	0.49	0.38	0.49	0.33
	2	5	3	0.46	0.38	0.46	0.31
	3	5	4	0.38	0.38	0.32	0.16
8	2	4	3	0.70	0.47	0.70	0.47
	3	4	5	0.47	0.32	0.47	0.32
	2	5	3	0.45	0.31	0.45	0.31
	4	4	6	0.36	0.28	0.36	0.25
	3	5	5	0.31	0.28	0.31	0.16
	4	5	6	0.28	0.28	0.24	0.12
10	2	4	3	0.70	0.47	0.70	0.47
	2	5	3	0.45	0.30	0.45	0.30
	4	4	7	0.36	0.25	0.36	0.25
	6	4	8	0.25	0.22	0.25	0.13
	4	5	7	0.24	0.22	0.24	0.12
	6	5	8	0.22	0.22	0.12	0.08
Waffle-grid walls[e]							
6	2	4	3	0.78	0.78	0.70	0.48
	3	4	4	0.78	0.78	0.49	0.25
	2	5	3	0.78	0.78	0.46	0.23
	3	5	4	0.78	0.78	0.24	0.16
8	2	4	3	0.78	0.78	0.70	0.47
	3	4	5	0.78	0.78	0.47	0.24
	2	5	3	0.78	0.78	0.45	0.23
	4	4	6	0.78	0.78	0.36	0.18
	3	5	5	0.78	0.78	0.23	0.16
	4	5	6	0.78	0.78	0.18	0.13
Screen-grid walls[e]							
6	2	4	3	0.93	0.93	0.70	0.48
	3	4	4	0.93	0.93	0.49	0.25
	2	5	3	0.93	0.93	0.46	0.23
	3	5	4	0.93	0.93	0.24	0.16

For SI: 1 inch = 25.4 mm, 1,000 pounds per square inch = 6.895 MPa.

a. See Note e to Table R608.7(1A) for application of adjustment factors in this table.

b. Yield strength in pounds per square inch of vertical wall reinforcement at ends of solid wall segments.

c. Values are based on concrete with a specified compressive strength, f'_c, of 2,500 psi. Where concrete with f'_c of not less than 3,000 psi is used, values in shaded cells are permitted to be decreased by multiplying by 0.91.

d. Horizontal and vertical shear reinforcement shall be provided in accordance with Section R608.7.2.2.

e. Each end of each solid wall segment shall have rectangular flanges. In the through-the-wall dimension, the flange shall be not less than $5^1/_2$ inches for 6-inch-nominal waffle- and screen-grid walls, and not less than $7^1/_2$ inches for 8-inch-nominal waffle-grid walls. In the in-plane dimension, flanges shall be long enough to accommodate the vertical reinforcement required by the layout detail selected from Figure R608.7(2) and provide the cover required by Section R608.5.4.1. If necessary to achieve the required dimensions, form material shall be removed or use of flat wall forms is permitted.

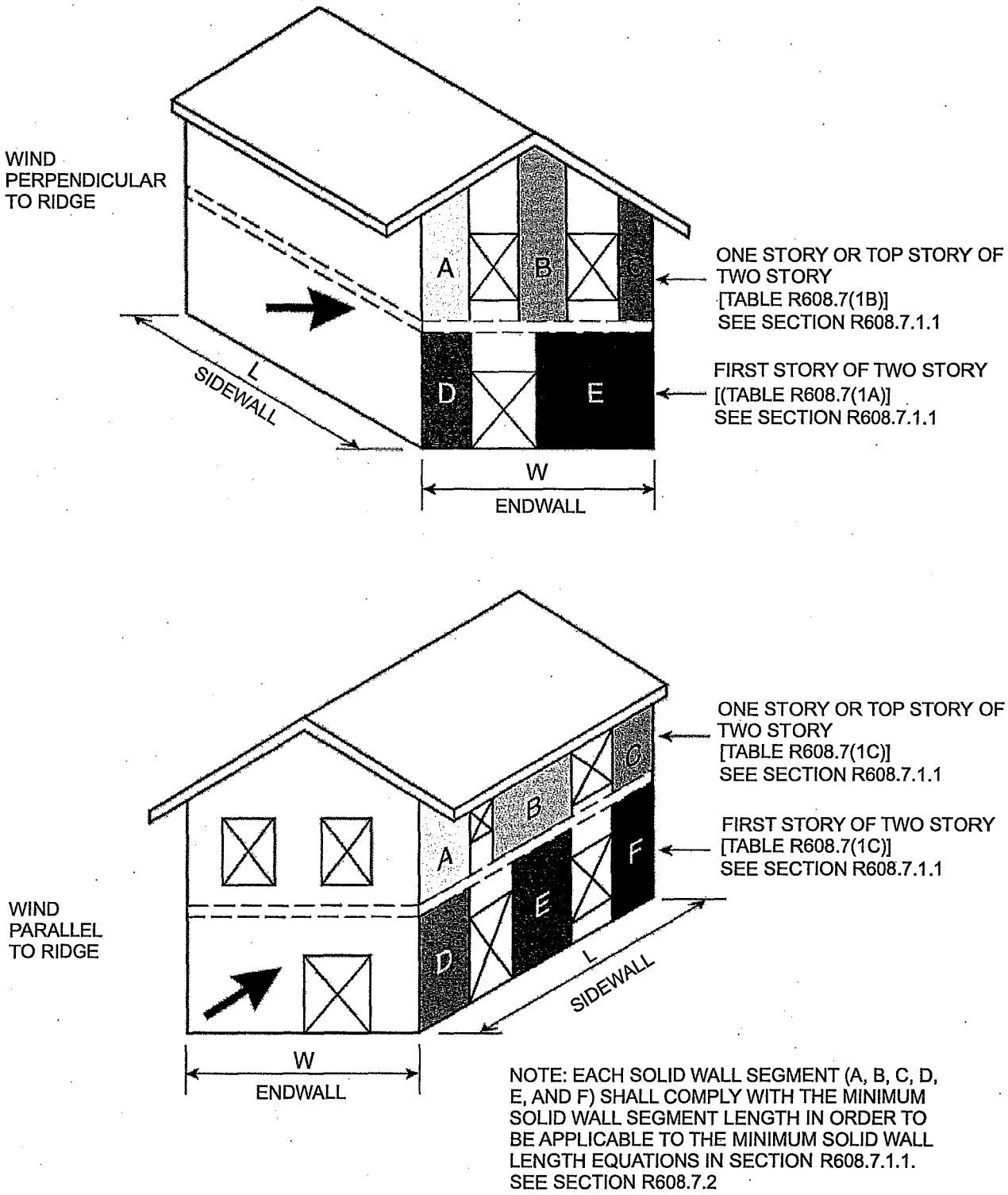

FIGURE R608.7(1)
MINIMUM SOLID WALL LENGTH

R608.7.2.1 Minimum length of solid wall segment and maximum spacing. Only solid wall segments equal to or greater than 24 inches (610 mm) in length shall be included in the total length of solid wall required by Section R608.7.1. In addition, not more than two solid wall segments equal to or greater than 24 inches (610 mm) in length and less than 48 inches (1219 mm) in length shall be included in the required total length of solid wall. The maximum clear opening width shall be 18 feet (5486 mm). See Figure R608.7(1).

R608.7.2.2 Reinforcement in solid wall segments.

R608.7.2.2.1 Horizontal shear reinforcement. Where reduction factors for design strength, R_3, from Table R608.7(4) based on horizontal and vertical shear reinforcement being provided are used, solid wall segments shall have horizontal reinforcement consisting of minimum No. 4 bars. Horizontal shear reinforcement shall be the same grade of steel required for the vertical reinforcement at the ends of solid wall segments by Section R608.7.2.2.2.

The spacing of horizontal reinforcement shall not exceed the smaller of one-half the length of the solid wall segment, minus 2 inches (51 mm), and 18 inches (457 mm). Horizontal shear reinforcement shall terminate in accordance with Section R608.6.4.

R608.7.2.2.2 Vertical reinforcement. Vertical reinforcement applicable to the reduction factor(s) for design strength, R_3, from Table R608.7(4) that is used, shall be located at each end of each solid wall segment in accordance with the applicable detail in Figure R608.7(2). The No. 4 vertical bar required on each side of an opening by Section R608.8.1.2 is permitted to be used as reinforcement at the ends of solid wall segments where installed in accordance with the applicable detail in Figure R08.7(2). There shall be not less than two No. 4 bars at each end of solid wall segments located as required by the applicable detail in Figure R608.7(2). One of the bars at each end of solid wall segments shall be deemed to meet the requirements for vertical wall reinforcement required by Section R608.6.

The vertical wall reinforcement at each end of each solid wall segment shall be developed below the bottom of the adjacent wall opening [see Figure R608.7(3)] by one of the following methods:

1. Where the wall height below the bottom of the adjacent opening is equal to or greater than 22 inches (559 mm) for No. 4 or 28 inches (711 mm) for No. 5 vertical wall reinforcement, reinforcement around openings in accordance with Section R608.8.1 shall be sufficient.
2. Where the wall height below the bottom of the adjacent opening is less than required by Item 1 above, the vertical wall reinforcement adjacent to the opening shall extend into the footing far enough to develop the bar in tension in accordance with Section R608.5.4.4 and Figure R608.5.4(2), or shall be lap-spliced with a dowel that is embedded in the footing far enough to develop the dowel-bar in tension.

R608.7.2.2.3 Vertical shear reinforcement. Where reduction factors for design strength, R_3, from Table R608.7(4) based on horizontal and vertical shear reinforcement being provided are used, solid wall segments shall have vertical reinforcement consisting of minimum No. 4 bars. Vertical shear reinforcement shall be the same grade of steel required by Section R608.7.2.2.2 for the vertical reinforcement at the ends of solid wall segments. The spacing of vertical reinforcement throughout the length of the segment shall not exceed the smaller of one third the length of the segment, and 18 inches (457 mm). Vertical shear reinforcement shall be continuous between stories in accordance with Section R608.6.3, and shall terminate in accordance with Section R608.6.4. Vertical shear reinforcement required by this section is permitted to be used for vertical reinforcement required by Table R608.6(1), R608.6(2), R608.6(3) or R608.6(4), whichever is applicable.

R608.7.2.3 Solid wall segments at corners. At all interior and exterior corners of exterior walls, a solid wall segment shall extend the full height of each wall *story*. The segment shall have the length required to develop the horizontal reinforcement above and below the adjacent opening in tension in accordance with Section R608.5.4.4. For an exterior corner, the limiting dimension is measured on the outside of the wall, and for an interior corner the limiting dimension is measured on the inside of the wall. See Section R608.8.1. The length of a segment contributing to the required length of solid wall shall comply with Section R608.7.2.1.

The end of a solid wall segment complying with the minimum length requirements of Section R608.7.2.1 shall be located not more than 6 feet (1829 mm) from each corner.

R608.8 Requirements for lintels and reinforcement around openings.

R608.8.1 Reinforcement around openings. Reinforcement shall be provided around openings in walls equal to or greater than 2 feet (610 mm) in width in accordance with this section and Figure R608.8(1), in addition to the minimum wall reinforcement required by Sections R404.1.3, R608.6 and R608.7. Vertical wall reinforcement required by this section is permitted to be used as reinforcement at the ends of solid wall segments required by Section R608.7.2.2.2 provided it is located in accordance with Section R608.8.1.2. Wall openings shall have a minimum depth of concrete over the width of the opening of 8 inches (203 mm) in flat walls and waffle-grid walls, and 12 inches (305 mm) in screen-grid walls. Wall openings in waffle-grid and screen-grid walls shall be located such that not less than one-half of a vertical core occurs along each side of the opening.

DETAIL NO.	NOM. WALL THICKNESS, IN.	REINFORCEMENT LAYOUT AT ENDS OF SOLID WALL SEGMENTS	NOTES
1	4	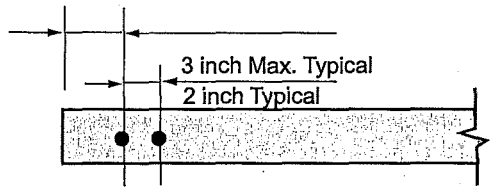	For SI: 1 inch = 25.4 mm. 1. See Table R608.7(4) for use of details.
2	4		2. Minimum length of solid wall segment and size and grade of reinforcement in each end of each solid wall segment shall be determined from Table R608.7(4).
3	6 8 10	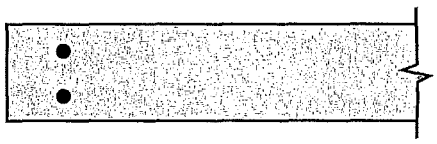	3.. For minimum cover requirements, see Section R608.5.4.1.
4	6	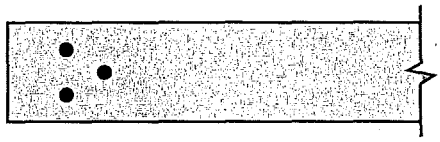	4.. For details 3 - 8 where two or more bars are in the same row parallel to the end of the segment, place bars so that corner bars are as close to the sides of the wall segments as minimum cover requirements of Section R608.5.4.1 will permit.
5	8	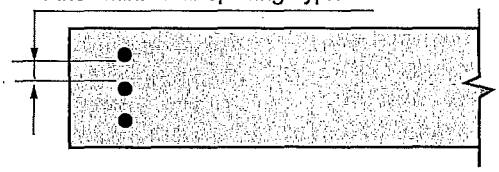	
6	8		5.. For waffle- and screen-grid walls, each end of each solid wall segment shall have rectangular flanges. In the through-the-wall dimension, the flange shall be not less than 5½ inches for 6-inch nominal waffle- and screen-grid forms, and not less than 7½ inches for 8-inch nominal waffle-grid forms. In the in-plane dimension, flanges shall be long enough to accommodate the vertical reinforcement required by the layout detail selected and provide the cover required by Section R608.5.4.1. If necessary to achieve the required dimensions, form material shall be removed or flat wall forms are permitted. See Table R608.7(4), Note e.
7	10	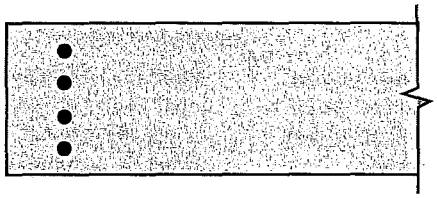	
8	10	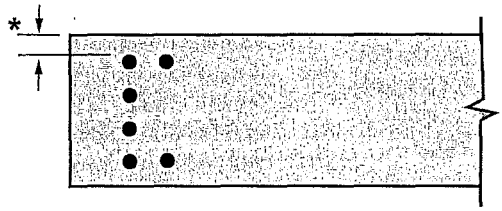 * For minimum cover see Section R608.5.4.1	

FIGURE R608.7(2)
VERTICAL REINFORCEMENT LAYOUT DETAIL

2748

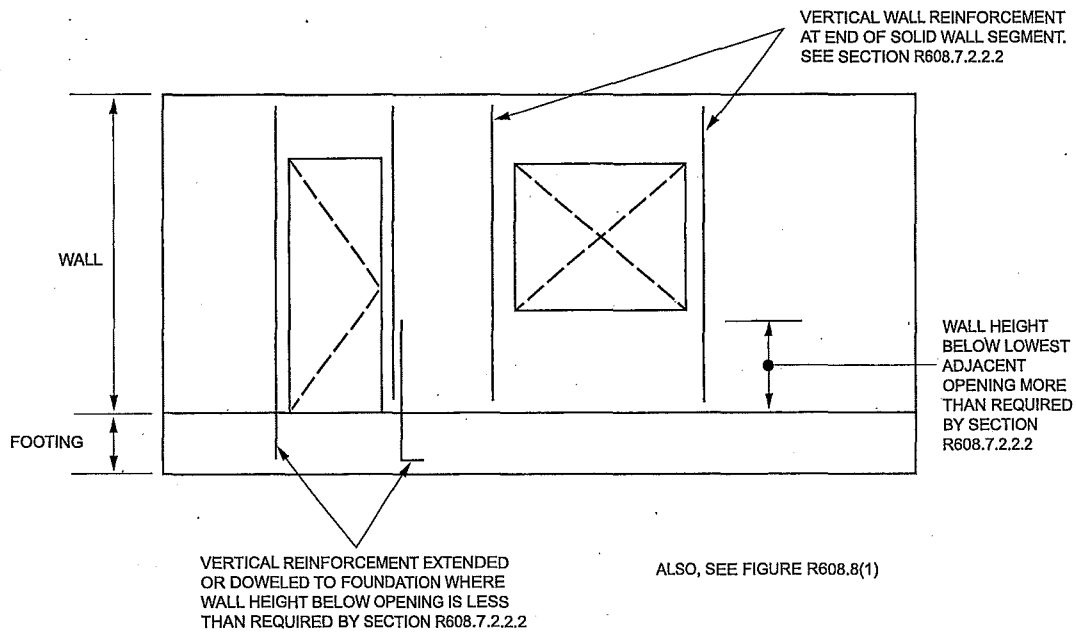

FIGURE R608.7(3)
VERTICAL WALL REINFORCEMENT ADJACENT TO WALL OPENINGS

R608.8.1.1 Horizontal reinforcement. Lintels complying with Section R608.8.2 shall be provided above wall openings equal to or greater than 2 feet (610 mm) in width.

Exception: Continuous horizontal wall reinforcement placed within 12 inches (305 mm) of the top of the wall *story* as required in Sections R404.1.2.2 and R608.6.2 is permitted in lieu of top or bottom lintel reinforcement required by Section R608.8.2 provided that the continuous horizontal wall reinforcement meets the location requirements specified in Figures R608.8(2), R608.8(3), and R608.8(4) and the size requirements specified in Tables R608.8(2) through R608.8(10).

Openings equal to or greater than 2 feet (610 mm) in width shall have not less than one No. 4 bar placed within 12 inches (305 mm) of the bottom of the opening. See Figure R608.8(1).

Horizontal reinforcement placed above and below an opening shall extend beyond the edges of the opening the dimension required to develop the bar in tension in accordance with Section R608.5.4.4.

R608.8.1.2 Vertical reinforcement. Not less than one No. 4 bar [Grade 40 (280 MPa)] shall be provided on each side of openings equal to or greater than 2 feet (610 mm) in width. The vertical reinforcement required by this section shall extend the full height of the wall story and shall be located within 12 inches (305 mm) of each side of the opening. The vertical reinforcement required on each side of an opening by this section is permitted to serve as reinforcement at the ends of solid wall segments in accordance with Section R608.7.2.2.2, provided it is located as required by the applicable detail in Figure R608.7(2). Where the vertical reinforcement required by this section is used to satisfy the requirements of Section R608.7.2.2.2 in waffle- and screen-grid walls, a concrete flange shall be created at the ends of the solid wall segments in accordance with Table R608.7(4), Note e. In the top-most story, the reinforcement shall terminate in accordance with Section R608.6.4.

R608.8.2 Lintels. Lintels shall be provided over all openings equal to or greater than 2 feet (610 mm) in width. Lintels with uniform loading shall conform to Sections R608.8.2.1 and R608.8.2.2, or Section R608.8.2.3. Lintels supporting concentrated loads, such as from roof or floor beams or girders, shall be designed in accordance with ACI 318.

R608.8.2.1 Lintels designed for gravity load-bearing conditions. Where a lintel will be subjected to gravity load condition 1 through 5 of Table R608.8(1), the clear span of the lintel shall not exceed that permitted by Tables R608.8(2) through R608.8(8). The maximum clear span of lintels with and without stirrups in flat walls shall be determined in accordance with Tables R608.8(2) through R608.8(5), and constructed in accordance with Figure R608.8(2). The maximum clear span of lintels with and without stirrups in waffle-grid walls shall be determined in accordance with Tables R608.8(6) and R608.8(7), and constructed in accordance with Figure R608.8(3). The maximum clear span of lintels with and without stirrups in screen-grid walls shall be determined in accordance with Table R608.8(8), and constructed in accordance with Figure R608.8(4).

Where required by the applicable table, No. 3 stirrups shall be installed in lintels at a maximum spacing of $d/2$ where d equals the depth of the lintel, D, less the cover of the concrete as shown in Figures R608.8(2) through R608.8(4). The smaller value of d computed for the top

and bottom bar shall be used to determine the maximum stirrup spacing. Where stirrups are required in a lintel with a single bar or two bundled bars in the top and bottom, they shall be fabricated like the letter "c" or "s" with 135-degree (2.36 rad) standard hooks at each end that comply with Section R608.5.4.5 and Figure R608.5.4(3) and installed as shown in Figures R608.8(2) through R608.8(4). Where two bars are required in the top and bottom of the lintel and the bars are not bundled, the bars shall be separated by not less than 1 inch (25 mm). The free end of the stirrups shall be fabricated with 90- or 135-degree (1.57 or 2.36 rad) standard hooks that comply with Section R608.5.4.5 and Figure R608.5.4(3) and installed as shown in Figures R608.8(2) and R608.8(3). For flat, waffle-grid and screen-grid lintels, stirrups are not required in the center distance, A, portion of spans in accordance with Figure R608.8(1) and Tables R608.8(2) through R608.8(8). See Section R608.8.2.2, Item 5, for requirement for stirrups through out lintels with bundled bars.

R608.8.2.2 Bundled bars in lintels. It is permitted to bundle two bars in contact with each other in lintels if all of the following are observed:

1. Bars equal to or less than No. 6 are bundled.
2. Where the wall thickness is not sufficient to provide not less than 3 inches (76 mm) of clear space beside bars (total on both sides) oriented horizontally in a bundle, the bundled bars shall be oriented in a vertical plane.
3. Where vertically oriented bundled bars terminate with standard hooks to develop the bars in tension beyond the support (see Section R608.5.4.4), the hook extensions shall be staggered to provide not less than 1 inch (25 mm) clear spacing between the extensions.
4. Bundled bars shall not be lap spliced within the lintel span and the length on each end of the lintel that is required to develop the bars in tension.
5. Bundled bars shall be enclosed within stirrups throughout the length of the lintel. Stirrups and the installation thereof shall comply with Section R608.8.2.1.

R608.8.2.3 Lintels without stirrups designed for nonload-bearing conditions. The maximum clear span of lintels without stirrups designed for nonload-bearing conditions of Table R608.8(1).1 shall be determined in accordance with this section. The maximum clear span of lintels without stirrups in flat walls shall be determined in accordance with Table R608.8(9), and the maximum clear span of lintels without stirrups in walls of waffle-grid or screen-grid construction shall be determined in accordance with Table R608.8(10).

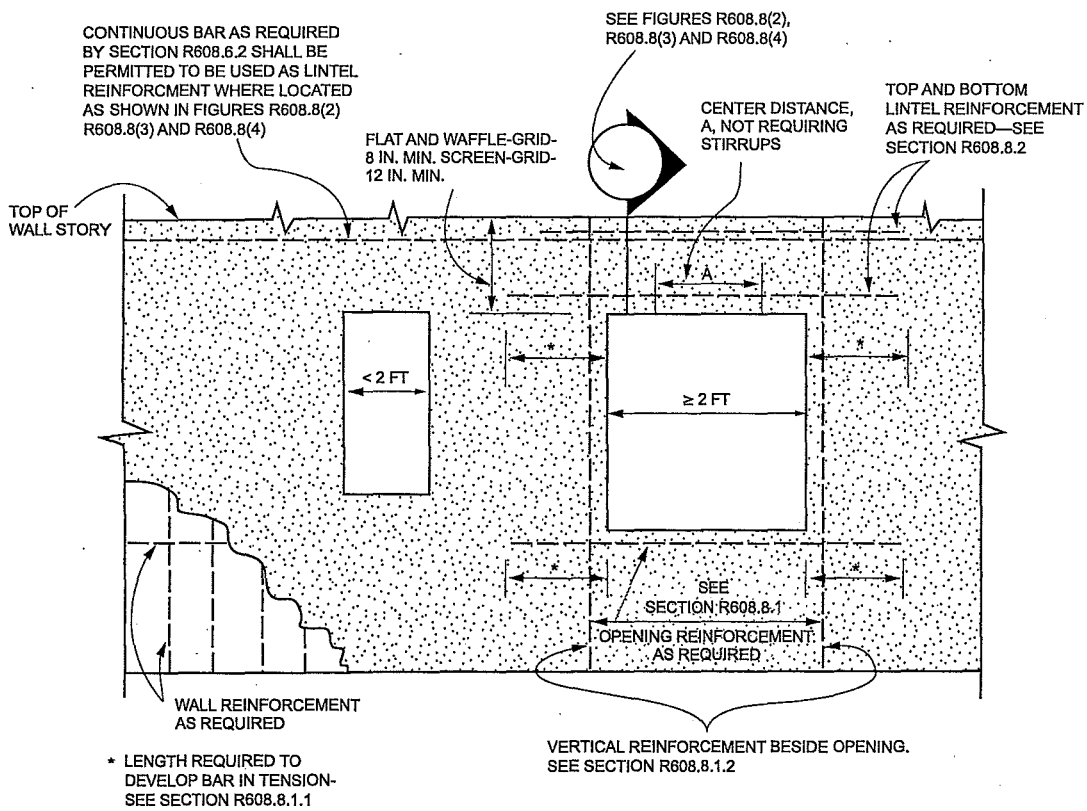

ELEVATION OF WALL

For SI: 1 inch = 25.4 mm, 1 foot = 304.8 mm.

FIGURE R608.8(1)
REINFORCEMENT OF OPENINGS

2750

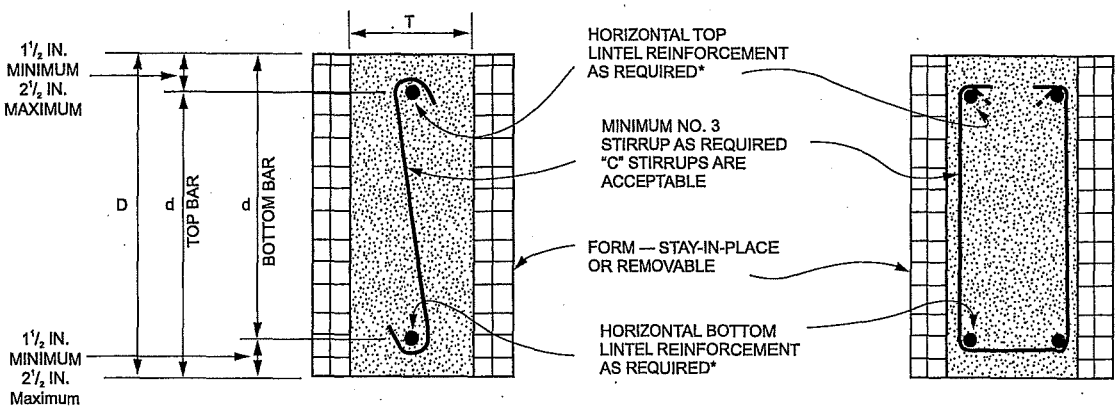

* FOR BUNDLED BARS, SEE SECTION R608.8.2.2.
SECTION CUT THROUGH FLAT WALL LINTEL

For SI: 1 inch = 25.4 mm.

FIGURE R608.8(2)
LINTEL FOR FLAT WALLS

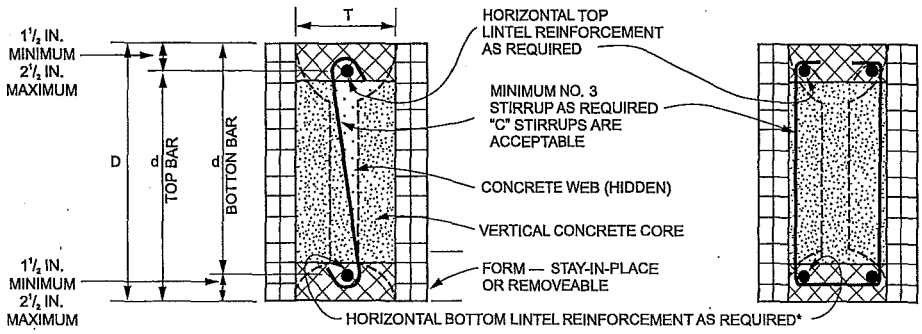

(a) SINGLE FORM HEIGHT SECTION CUT THROUGH VERTICAL CORE OF A WAFFLE-GRID LINTEL

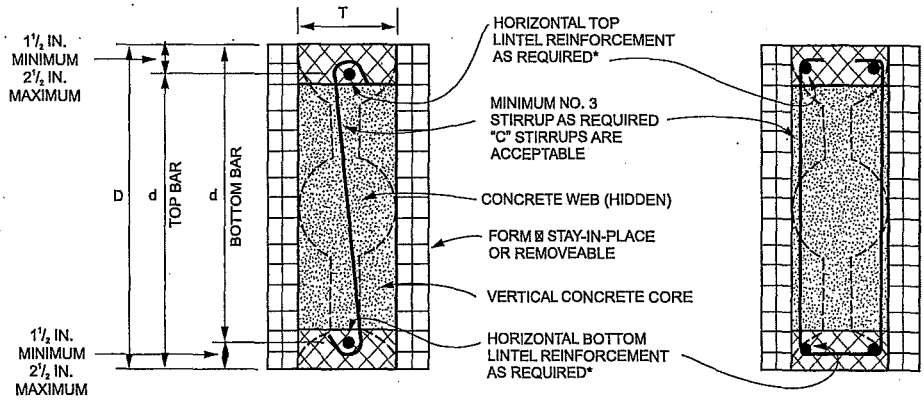

(b) DOUBLE FORM HEIGHT SECTION CUT THROUGH VERTICAL CORE OF A WAFFLE-GRID LINTEL

*FOR BUNDLED BARS, SEE SECTION R608.8.2.2.

NOTE: CROSS-HATCHING REPRESENTS THE AREA IN WHICH FORM MATERIAL SHALL BE REMOVED, IF NECESSARY, TO CREATE FLANGES CONTINUOUS THE LENGTH OF THE LINTEL. FLANGES SHALL HAVE A MINIMUM THICKNESS OF 3 IN., AND A MINIMUM WIDTH OF 5 IN. AND 7 IN. IN 6 IN. NOMINAL AND 8 IN. NOMINAL WAFFLE-GRID WALLS, RESPECTIVELY. SEE NOTE a TO TABLES R608.8(6) AND R608.8(10).

For SI: 1 inch = 25.4 mm.

FIGURE R608.8(3)
LINTELS FOR WAFFLE-GRID WALLS

2751

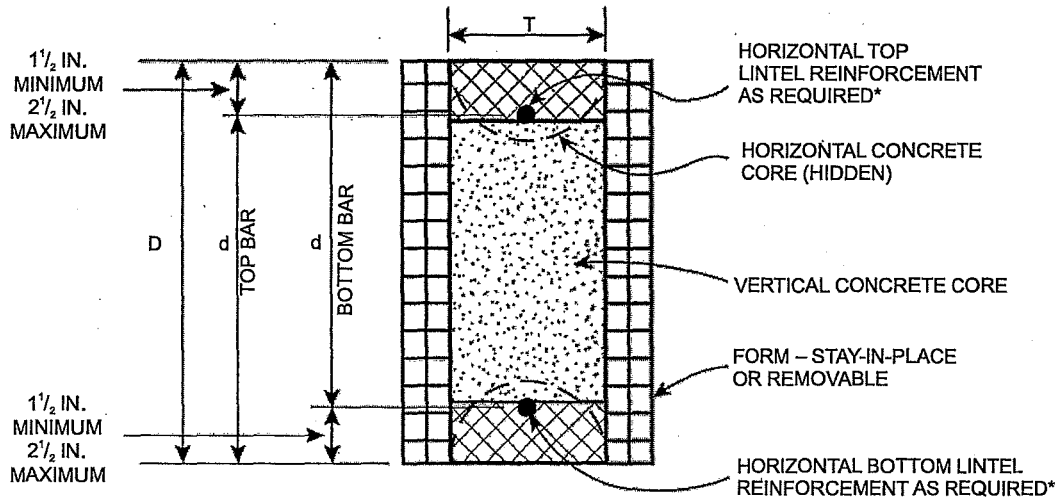

(a) SINGLE FORM HEIGHT SECTION CUT THROUGH VERTICAL CORE OF A SCREEN-GRID LINTEL

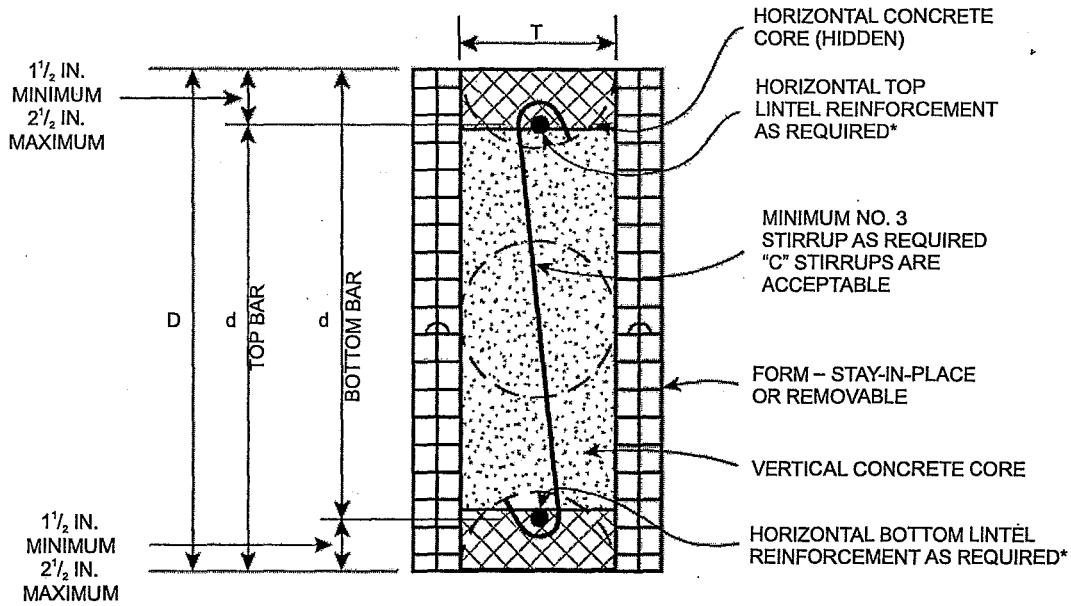

(b) DOUBLE FORM HEIGHT SECTION CUT THROUGH VERTICAL CORE OF A SCREEN-GRID LINTEL

*FOR BUNDLED BARS, SEE SECTION R608.8.2.2

NOTE: CROSS-HATCHING REPRESENTS THE AREA IN WHICH FORM MATERIAL SHALL BE REMOVED, IF NECESSARY, TO CREATE FLANGES CONTINUOUS THE LENGTH OF THE LINTEL. FLANGES SHALL HAVE A MINIMUM THICKNESS OF 2.5 IN. AND A MINIMUM WIDTH OF 5 IN. SEE NOTE a TO TABLES R608.8(8) AND R608.8(10).

For SI: 1 inch = 25.4 mm.

FIGURE R608.8(4)
LINTELS FOR SCREEN-GRID WALLS

TABLE R608.8(1)
LINTEL DESIGN LOADING CONDITIONS[a, b, d]

DESCRIPTION OF LOADS AND OPENINGS ABOVE INFLUENCING DESIGN OF LINTEL			DESIGN LOAD CONDITION[c]
Opening in wall of top story of two-story building, or first story of one-story building			
Wall supporting loads from roof, including attic floor, if applicable, and	Top of lintel equal to or less than W/2 below top of wall		2
	Top of lintel greater than W/2 below top of wall		NLB
Wall not supporting loads from roof or attic floor			NLB
Opening in wall of first story of two-story building where wall immediately above is of concrete construction, or opening in basement wall of one-story building where wall immediately above is of concrete construction			
LB ledger board mounted to side of wall with bottom of ledger less than or equal to W/2 above top of lintel, and	Top of lintel greater than W/2 below bottom of opening in story above		1
	Top of lintel less than or equal to W/2 below bottom of opening in story above, and	Opening is entirely within the footprint of the opening in the story above	1
		Opening is partially within the footprint of the opening in the story above	4
LB ledger board mounted to side of wall with bottom of ledger more than W/2 above top of lintel			NLB
NLB ledger board mounted to side of wall with bottom of ledger less than or equal to W/2 above top of lintel, or no ledger board, and	Top of lintel greater than W/2 below bottom of opening in story above		NLB
	Top of lintel less than or equal to W/2 below bottom of opening in story above, and	Opening is entirely within the footprint of the opening in the story above	NLB
		Opening is partially within the footprint of the opening in the story above	1
Opening in basement wall of two-story building where walls of two stories above are of concrete construction			
LB ledger board mounted to side of wall with bottom of ledger less than or equal to W/2 above top of lintel, and	Top of lintel greater than W/2 below bottom of opening in story above		1
	Top of lintel less than or equal to W/2 below bottom of opening in story above, and	Opening is entirely within the footprint of the opening in the story above	1
		Opening is partially within the footprint of the opening in the story above	5
LB ledger board mounted to side of wall with bottom of ledger more than W/2 above top of lintel			NLB
NLB ledger board mounted to side of wall with bottom of ledger less than or equal to W/2 above top of lintel, or no ledger board, and	Top of lintel greater than W/2 below bottom of opening in story above		NLB
	Top of lintel less than or equal to W/2 below bottom of opening in story above, and	Opening is entirely within the footprint of the opening in the story above	NLB
		Opening is partially within the footprint of the opening in the story above	1
Opening in wall of first story of two-story building where wall immediately above is of light-framed construction, or opening in basement wall of one-story building where wall immediately above is of light-framed construction			
Wall supporting loads from roof, second floor and top-story wall of light-framed construction, and	Top of lintel equal to or less than W/2 below top of wall		3
	Top of lintel greater than W/2 below top of wall		NLB
Wall not supporting loads from roof or second floor			NLB

a. LB means load bearing, NLB means nonload bearing, and W means width of opening.
b. Footprint is the area of the wall below an opening in the story above, bounded by the bottom of the opening and vertical lines extending downward from the edges of the opening.
c. For design loading condition "NLB" see Tables R608.8(9) and R608.8(10). For all other design loading conditions, see Tables R608.8(2) through R608.8(8).
d. A NLB ledger board is a ledger attached to a wall that is parallel to the span of the floor, roof or ceiling framing that supports the edge of the floor, ceiling or roof.

TABLE R608.8(2)
MAXIMUM ALLOWABLE CLEAR SPANS FOR 4-INCH-NOMINAL THICK FLAT LINTELS IN LOAD-BEARING WALLS[a, b, c, d, e, f, m]
ROOF CLEAR SPAN 40 FEET AND FLOOR CLEAR SPAN 32 FEET

LINTEL DEPTH, D[g] (inches)	NUMBER OF BARS AND BAR SIZE IN TOP AND BOTTOM OF LINTEL	STEEL YIELD STRENGTH[h], f_y (psi)	DESIGN LOADING CONDITION DETERMINED FROM TABLE R608.8(1)								
			1	2		3		4		5	
			Maximum ground snow load (psf)								
			—	30	70	30	70	30	70	30	70
			Maximum clear span of lintel (feet - inches)								
8	Span without stirrups[i, j]		3-2	3-4	2-4	2-6	2-2	2-1	2-0	2-0	2-0
	1-#4	40,000	5-2	5-5	4-1	4-3	3-10	3-7	3-4	2-9	2-9
		60,000	6-2	6-5	4-11	5-1	4-6	4-2	3-8	2-11	2-10
	1-#5	40,000	6-3	6-7	5-0	5-2	4-6	4-2	3-8	2-11	2-10
		60,000	DR	DR	DR	DR	DR	DR	DR	DR	DR
	Center distance $A^{k,l}$		1-1	1-2	0-8	0-9	0-7	0-6	0-5	0-4	0-4
12	Span without stirrups[i, j]		3-4	3-7	2-9	2-11	2-8	2-6	2-5	2-2	2-2
	1-#4	40,000	6-7	7-0	5-4	5-7	5-0	4-9	4-4	3-8	3-7
		60,000	7-11	8-6	6-6	6-9	6-0	5-9	5-3	4-5	4-4
	1-#5	40,000	8-1	8-8	6-7	6-10	6-2	5-10	5-4	4-6	4-5
		60,000	9-8	10-4	7-11	8-2	7-4	6-11	6-2	4-10	4-8
	2-#4 1-#6	40,000	9-1	9-8	7-4	7-8	6-10	6-6	6-0	4-10	4-8
		60,000	DR	DR	DR	DR	DR	DR	DR	DR	DR
	Center distance $A^{k,l}$		1-8	1-11	1-1	1-3	1-0	0-11	0-9	0-6	0-6
16	Span without stirrups[i, j]		4-7	5-0	3-11	4-0	3-8	3-7	3-4	3-1	3-0
	1-#4	40,000	6-8	7-3	5-6	5-9	5-2	4-11	4-6	3-10	3-8
		60,000	9-3	10-1	7-9	8-0	7-2	6-10	6-3	5-4	5-2
	1-#4	40,000	9-6	10-4	7-10	8-2	7-4	6-11	6-5	5-5	5-3
		60,000	11-5	12-5	9-6	9-10	8-10	8-4	7-9	6-6	6-4
	2-#4 1-#6	40,000	10-7	11-7	8-10	9-2	8-3	7-9	7-2	6-1	5-11
		60,000	12-9	13-10	10-7	11-0	9-10	9-4	8-7	6-9	6-6
	2-#5	40,000	13-0	14-1	10-9	11-2	9-11	9-2	8-2	6-6	6-3
		60,000	DR	DR	DR	DR	DR	DR	DR	DR	DR
	Center distance[k, l]		2-3	2-8	1-7	1-8	1-4	1-3	1-0	0-9	0-8
20	Span without stirrups[i, j]		5-9	6-5	5-0	5-2	4-9	4-7	4-4	3-11	3-11
	1-#4	40,000	7-5	8-2	6-3	6-6	5-10	5-7	5-1	4-4	4-2
		60,000	9-0	10-0	7-8	7-11	7-1	6-9	6-3	5-3	5-1
	1-#5	40,000	9-2	10-2	7-9	8-1	7-3	6-11	6-4	5-4	5-2
		60,000	12-9	14-2	10-10	11-3	10-1	9-7	8-10	7-5	7-3
	2-#4 1-#6	40,000	11-10	13-2	10-1	10-5	9-4	8-11	8-2	6-11	6-9
		60,000	14-4	15-10	12-1	12-7	11-3	10-9	9-11	8-4	8-1
	2-#5	40,000	14-7	16-2	12-4	12-9	11-4	10-6	9-5	7-7	7-3
		60,000	17-5	19-2	14-9	15-3	13-5	12-4	11-0	8-8	8-4
	2-#6	40,000	16-4	18-11	12-7	13-3	11-4	10-6	9-5	7-7	7-3
		60,000	DR	DR	DR	DR	DR	DR	DR	DR	DR
	Center distance $A^{k,l}$		2-9	3-5	2-0	2-2	1-9	1-7	1-4	0-11	0-11

(continued)

TABLE R608.8(2)—continued
MAXIMUM ALLOWABLE CLEAR SPANS FOR 4-INCH-NOMINAL THICK FLAT LINTELS IN LOAD-BEARING WALLS[a, b, c, d, e, f, m]
ROOF CLEAR SPAN 40 FEET AND FLOOR CLEAR SPAN 32 FEET

LINTEL DEPTH, D[g] (inches)	NUMBER OF BARS AND BAR SIZE IN TOP AND BOTTOM OF LINTEL	STEEL YIELD STRENGTH[h], f_y (psi)	DESIGN LOADING CONDITION DETERMINED FROM TABLE R608.8(1)								
			1	2		3		4		5	
			Maximum ground snow load (psf)								
			—	30	70	30	70	30	70	30	70
			Maximum clear span of lintel (feet - inches)								
24	Span without stirrups[i, j]		6-11	7-9	6-1	6-3	5-9	5-7	5-3	4-9	4-8
	1-#4	40,000	8-0	9-0	6-11	7-2	6-5	6-2	5-8	4-9	4-8
		60,000	9-9	11-0	8-5	8-9	7-10	7-6	6-11	5-10	5-8
	1-#5	40,000	10-0	11-3	8-7	8-11	8-0	7-7	7-0	5-11	5-9
		60,000	13-11	15-8	12-0	12-5	11-2	10-7	9-10	8-3	8-0
	2-#4 1-#6	40,000	12-11	14-6	11-2	11-6	10-5	9-10	9-1	7-8	7-5
		60,000	15-7	17-7	13-6	13-11	12-7	11-11	11-0	9-3	9-0
	2-#5	40,000	15-11	17-11	13-7	14-3	12-8	11-9	10-8	8-7	8-4
		60,000	19-1	21-6	16-5	17-1	15-1	14-0	12-6	9-11	9-7
	2-#6	40,000	17-7	21-1	14-1	14-10	12-8	11-9	10-8	8-7	8-4
		60,000	DR	DR	DR	DR	DR	DR	DR	DR	DR
	Center distance A[k, l]		3-3	4-1	2-5	2-7	2-1	1-11	1-7	1-2	1-1

For SI: 1 inch = 25.4 mm, 1 foot = 304.8 mm, 1 pound per square foot = 0.0479 kPa, Grade 40 = 280 MPa, Grade 60 = 420 MPa.

a. See Table R608.3 for tolerances permitted from nominal thickness.

b. Table values are based on concrete with a minimum specified compressive strength of 2,500 psi. See Note j.

c. Table values are based on uniform loading. See Section R608.8.2 for lintels supporting concentrated loads.

d. Deflection criterion is $L/240$, where L is the clear span of the lintel in inches, or $^1/_2$-inch, whichever is less.

e. Linear interpolation is permitted between ground snow loads and between lintel depths.

f. DR indicates design required.

g. Lintel depth, D, is permitted to include the available height of wall located directly above the lintel, provided that the increased lintel depth spans the entire length of the lintel.

h. Stirrups shall be fabricated from reinforcing bars with the same yield strength as that used for the main longitudinal reinforcement.

i. Allowable clear span without stirrups applicable to all lintels of the same depth, D. Top and bottom reinforcement for lintels without stirrups shall be not less than the least amount of reinforcement required for a lintel of the same depth and loading condition with stirrups. All other spans require stirrups spaced at not more than $d/2$.

j. Where concrete with a minimum specified compressive strength of 3,000 psi is used, clear spans for lintels without stirrups shall be permitted to be multiplied by 1.05. If the increased span exceeds the allowable clear span for a lintel of the same depth and loading condition with stirrups, the top and bottom reinforcement shall be equal to or greater than that required for a lintel of the same depth and loading condition that has an allowable clear span that is equal to or greater than that of the lintel without stirrups that has been increased.

k. Center distance, A, is the center portion of the clear span where stirrups are not required. This is applicable to all longitudinal bar sizes and steel yield strengths.

l. Where concrete with a minimum specified compressive strength of 3,000 psi is used, center distance, A, shall be permitted to be multiplied by 1.10.

m. The maximum clear opening width between two solid wall segments shall be 18 feet. See Section R608.7.2.1. Lintel clear spans in the table greater than 18 feet are shown for interpolation and information only.

TABLE R608.8(3)
MAXIMUM ALLOWABLE CLEAR SPANS FOR 6-INCH-NOMINAL THICK FLAT LINTELS IN LOAD-BEARING WALLS[a, b, c, d, e, f, m]
ROOF CLEAR SPAN 40 FEET AND FLOOR CLEAR SPAN 32 FEET

LINTEL DEPTH, D[g] (inches)	NUMBER OF BARS AND BAR SIZE IN TOP AND BOTTOM OF LINTEL	STEEL YIELD STRENGTH[h], f_y (psi)	DESIGN LOADING CONDITION DETERMINED FROM TABLE R608.8(1)								
			1	2		3		4		5	
			Maximum ground snow load (psf)								
			—	30	70	30	70	30	70	30	70
			Maximum clear span of lintel (feet - inches)								
8	Span without stirrups[i, j]		4-2	4-8	3-1	3-3	2-10	2-6	2-3	2-0	2-0
	1-#4	40,000	5-1	5-5	4-2	4-3	3-10	3-6	3-3	2-8	2-7
		60,000	6-2	6-7	5-0	5-2	4-8	4-2	3-11	3-3	3-2
	1-#5	40,000	6-3	6-8	5-1	5-3	4-9	4-3	4-0	3-3	3-2
		60,000	7-6	8-0	6-1	6-4	5-8	5-1	4-9	3-8	3-6
	2-#4 1-#6	40,000	7-0	7-6	5-8	5-11	5-3	4-9	4-5	3-8	3-6
		60,000	DR	DR	DR	DR	DR	DR	DR	DR	DR
	Center distance $A^{k, l}$		1-7	1-10	1-1	1-2	0-11	0-9	0-8	0-5	0-5
12	Span without stirrups[i, j]		4-2	4-8	3-5	3-6	3-2	2-11	2-9	2-5	2-4
	1-#4	40,000	5-7	6-1	4-8	4-10	4-4	3-11	3-8	3-0	2-11
		60,000	7-9	8-6	6-6	6-9	6-1	5-6	5-1	4-3	4-1
	1-#5	40,000	7-11	8-8	6-8	6-11	6-2	5-7	5-2	4-4	4-2
		60,000	9-7	10-6	8-0	8-4	7-6	6-9	6-3	5-2	5-1
	2-#4 1-#6	40,000	8-11	9-9	7-6	7-9	6-11	6-3	5-10	4-10	4-8
		60,000	10-8	11-9	8-12	9-4	8-4	7-6	7-0	5-10	5-8
	2-#5	40,000	10-11	12-0	9-2	9-6	8-6	7-8	7-2	5-6	5-3
		60,000	12-11	14-3	10-10	11-3	10-1	9-0	8-1	6-1	5-10
	2-#6	40,000	12-9	14-0	10-8	11-1	9-7	8-1	7-3	5-6	5-3
		60,000	DR	DR	DR	DR	DR	DR	DR	DR	DR
	Center distance $A^{k, l}$		2-6	3-0	1-9	1-10	1-6	1-3	1-1	0-9	0-8
16	Span without stirrups[i, j]		5-7	6-5	4-9	4-11	4-5	4-0	3-10	3-4	3-4
	1-#4	40,000	6-5	7-2	5-6	5-9	5-2	4-8	4-4	3-7	3-6
		60,000	7-10	8-9	6-9	7-0	6-3	5-8	5-3	4-4	4-3
	1-#5	40,000	7-11	8-11	6-10	7-1	6-5	5-9	5-4	4-5	4-4
		60,000	11-1	12-6	9-7	9-11	8-11	8-0	7-6	6-2	6-0
	2-#4 1-#6	40,000	10-3	11-7	8-10	9-2	8-3	7-6	6-11	5-9	5-7
		60,000	12-5	14-0	10-9	11-1	10-0	9-0	8-5	7-0	6-9
	2-#5	40,000	12-8	14-3	10-11	11-4	10-2	9-2	8-7	6-9	6-6
		60,000	15-2	17-1	13-1	13-7	12-3	11-0	10-3	7-11	7-7
	2-#6	40,000	14-11	16-9	12-8	13-4	11-4	9-8	8-8	6-9	6-6
		60,000	DR	DR	DR	DR	DR	DR	DR	DR	DR
	Center distance $A^{k, l}$		3-3	4-1	2-5	2-7	2-1	1-9	1-6	1-0	1-0

(continued)

TABLE R608.8(3)—continued
MAXIMUM ALLOWABLE CLEAR SPANS FOR 6-INCH-NOMINAL THICK FLAT LINTELS IN LOAD-BEARING WALLS[a, b, c, d, e, f, m]
ROOF CLEAR SPAN 40 FEET AND FLOOR CLEAR SPAN 32 FEET

LINTEL DEPTH, D[g] (inches)	NUMBER OF BARS AND BAR SIZE IN TOP AND BOTTOM OF LINTEL	STEEL YIELD STRENGTH[h], f_y (psi)	DESIGN LOADING CONDITION DETERMINED FROM TABLE R608.8(1)								
			1	2		3		4		5	
			Maximum ground snow load (psf)								
			—	30	70	30	70	30	70	30	70
			Maximum clear span of lintel (feet - inches)								
20	Span without stirrups[i, j]		6-11	8-2	6-1	6-3	5-8	5-2	4-11	4-4	4-3
	1-#5	40,000	8-9	10-1	7-9	8-0	7-3	6-6	6-1	5-1	4-11
		60,000	10-8	12-3	9-5	9-9	8-10	8-0	7-5	6-2	6-0
	2-#4 1-#6	40,000	9-11	11-4	8-9	9-1	8-2	7-4	6-10	5-8	5-7
		60,000	13-9	15-10	12-2	12-8	11-5	10-3	9-7	7-11	7-9
	2-#5	40,000	14-0	16-2	12-5	12-11	11-7	10-6	9-9	7-11	7-8
		60,000	16-11	19-6	15-0	15-6	14-0	12-7	11-9	9-1	8-9
	2-#6	40,000	16-7	19-1	14-7	15-3	13-1	11-3	10-2	7-11	7-8
		60,000	19-11	22-10	17-4	18-3	15-6	13-2	11-10	9-1	8-9
	Center distance A[k, l]		3-11	5-2	3-1	3-3	2-8	2-2	1-11	1-4	1-3
24	Span without stirrups[i, j]		8-2	9-10	7-4	7-8	6-11	6-4	5-11	5-3	5-2
	1-#5	40,000	9-5	11-1	8-7	8-10	8-0	7-3	6-9	5-7	5-5
		60,000	11-6	13-6	10-5	10-9	9-9	8-9	8-2	6-10	6-8
	2-#4 1-#6	40,000	10-8	12-6	9-8	10-0	9-0	8-2	7-7	6-4	6-2
		60,000	12-11	15-2	11-9	12-2	11-0	9-11	9-3	7-8	7-6
	2-#5	40,000	15-2	17-9	13-9	14-3	12-10	11-7	10-10	9-0	8-9
		60,000	18-4	21-6	16-7	17-3	15-6	14-0	13-1	10-4	10-0
	2-#6	40,000	18-0	21-1	16-4	16-11	14-10	12-9	11-8	9-2	8-11
		60,000	21-7	25-4	19-2	20-4	17-2	14-9	13-4	10-4	10-0
	Center distance A[k, l]		4-6	6-2	3-8	4-0	3-3	2-8	2-3	1-7	1-6

For SI: 1 inch = 25.4 mm, 1 foot = 304.8 mm, 1 pounds per square foot = 0.0479 kPa, Grade 40 = 280 MPa, Grade 60 = 420 MPa.

a. See Table R608.3 for tolerances permitted from nominal thickness.

b. Table values are based on concrete with a minimum specified compressive strength of 2,500 psi. See Note j.

c. Table values are based on uniform loading. See Section R608.8.2 for lintels supporting concentrated loads.

d. Deflection criterion is $L/240$, where L is the clear span of the lintel in inches, or $^1/_2$-inch, whichever is less.

e. Linear interpolation is permitted between ground snow loads and between lintel depths.

f. DR indicates design required.

g. Lintel depth, D, is permitted to include the available height of wall located directly above the lintel, provided that the increased lintel depth spans the entire length of the lintel.

h. Stirrups shall be fabricated from reinforcing bars with the same yield strength as that used for the main longitudinal reinforcement.

i. Allowable clear span without stirrups applicable to all lintels of the same depth, D. Top and bottom reinforcement for lintels without stirrups shall be not less than the least amount of reinforcement required for a lintel of the same depth and loading condition with stirrups. All other spans require stirrups spaced at not more than $d/2$.

j. Where concrete with a minimum specified compressive strength of 3,000 psi is used, clear spans for lintels without stirrups shall be permitted to be multiplied by 1.05. If the increased span exceeds the allowable clear span for a lintel of the same depth and loading condition with stirrups, the top and bottom reinforcement shall be equal to or greater than that required for a lintel of the same depth and loading condition that has an allowable clear span that is equal to or greater than that of the lintel without stirrups that has been increased.

k. Center distance, A, is the center portion of the clear span where stirrups are not required. This is applicable to all longitudinal bar sizes and steel yield strengths.

l. Where concrete with a minimum specified compressive strength of 3,000 psi is used, center distance, A, shall be permitted to be multiplied by 1.10.

m. The maximum clear opening width between two solid wall segments shall be 18 feet. See Section R608.7.2.1. Lintel clear spans in the table greater than 18 feet are shown for interpolation and information only.

TABLE R608.8(4)
MAXIMUM ALLOWABLE CLEAR SPANS FOR 8-INCH-NOMINAL THICK FLAT LINTELS IN LOAD-BEARING WALLS[a, b, c, d, e, f, m]
ROOF CLEAR SPAN 40 FEET AND FLOOR CLEAR SPAN 32 FEET

LINTEL DEPTH, D[g] (inches)	NUMBER OF BARS AND BAR SIZE IN TOP AND BOTTOM OF LINTEL	STEEL YIELD STRENGTH[h], f_y (psi)	DESIGN LOADING CONDITION DETERMINED FROM TABLE R608.8(1)								
			1	2		3		4		5	
			Maximum ground snow load (psf)								
			—	30	70	30	70	30	70	30	70
			Maximum clear span of lintel (feet - inches)								
8	Span without stirrups[i, j]		4-4	4-9	3-7	3-9	3-4	2-10	2-7	2-1	2-0
	1-#4	40,000	4-4	4-9	3-7	3-9	3-4	2-11	2-9	2-3	2-2
		60,000	6-1	6-7	5-0	5-3	4-8	4-0	3-9	3-1	3-0
	1-#5	40,000	6-2	6-9	5-2	5-4	4-9	4-1	3-10	3-2	3-1
		60,000	7-5	8-1	6-2	6-5	5-9	4-11	4-7	3-9	3-8
	2-#4 1-#6	40,000	6-11	7-6	5-9	6-0	5-4	4-7	4-4	3-6	3-5
		60,000	8-3	9-0	6-11	7-2	6-5	5-6	5-2	4-2	4-1
	2-#5	40,000	8-5	9-2	7-0	7-3	6-6	5-7	5-3	4-2	4-0
		60,000	DR	DR	DR	DR	DR	DR	DR	DR	DR
	Center distance A[k, l]		2-1	2-6	1-5	1-6	1-3	0-11	0-10	0-6	0-6
12	Span without stirrups[i, j]		4-10	5-8	4-0	4-2	3-9	3-2	3-0	2-7	2-6
	1-#4	40,000	5-5	6-1	4-8	4-10	4-4	3-9	3-6	2-10	2-10
		60,000	6-7	7-5	5-8	5-11	5-4	4-7	4-3	3-6	3-5
	1-#5	40,000	6-9	7-7	5-9	6-0	5-5	4-8	4-4	3-7	3-6
		60,000	9-4	10-6	8-1	8-4	7-6	6-6	6-1	5-0	4-10
	2-#4 1-#6	40,000	8-8	9-9	7-6	7-9	7-0	6-0	5-8	4-7	4-6
		60,000	10-6	11-9	9-1	9-5	8-5	7-3	6-10	5-7	5-5
	2-#5	40,000	10-8	12-0	9-3	9-7	8-7	7-5	6-11	5-6	5-4
		60,000	12-10	14-5	11-1	11-6	10-4	8-11	8-4	6-7	6-4
	2-#6	40,000	12-7	14-2	10-10	11-3	10-2	8-3	7-6	5-6	5-4
		60,000	DR	DR	DR	DR	DR	DR	DR	DR	DR
	Center distance A[k, l]		3-2	4-0	2-4	2-6	2-0	1-6	1-4	0-11	0-10
16	Span without stirrups[i, j]		6-5	7-9	5-7	5-10	5-2	4-5	4-2	3-7	3-6
	1-#4	40,000	6-2	7-1	5-6	5-8	5-1	4-5	4-2	3-5	3-4
		60,000	7-6	8-8	6-8	6-11	6-3	5-5	5-1	4-2	4-0
	1-#5	40,000	7-8	8-10	6-10	7-1	6-4	5-6	5-2	4-3	4-1
		60,000	9-4	10-9	8-4	8-7	7-9	6-8	6-3	5-2	5-0
	2-#4 1-#6	40,000	8-8	10-0	7-8	8-0	7-2	6-2	5-10	4-9	4-8
		60,000	12-0	13-11	10-9	11-2	10-0	8-8	8-1	6-8	6-6
	2-#5	40,000	12-3	14-2	11-0	11-4	10-3	8-10	8-3	6-9	6-7
		60,000	14-10	17-2	13-3	13-8	12-4	10-8	10-0	7-11	7-8
	2-#6	40,000	14-6	16-10	13-0	13-5	12-1	10-1	9-2	6-11	6-8
		60,000	17-5	20-2	15-7	16-1	14-6	11-10	10-8	7-11	7-8
	Center distance[k, l]		4-1	5-5	3-3	3-6	2-10	2-1	1-10	1-3	1-2

(continued)

TABLE R608.8(4)—continued
MAXIMUM ALLOWABLE CLEAR SPANS FOR 8-INCH-NOMINAL THICK FLAT LINTELS IN LOAD-BEARING WALLS[a, b, c, d, e, f, m]
ROOF CLEAR SPAN 40 FEET AND FLOOR CLEAR SPAN 32 FEET

LINTEL DEPTH, D[g] (inches)	NUMBER OF BARS AND BAR SIZE IN TOP AND BOTTOM OF LINTEL	STEEL YIELD STRENGTH[h], f_y (psi)	DESIGN LOADING CONDITION DETERMINED FROM TABLE R608.8(1)								
			1	2		3		4		5	
			Maximum ground snow load (psf)								
			—	30	70	30	70	30	70	30	70
			Maximum clear span of lintel (feet - inches)								
20	Span without stirrups[i, j]		7-10	9-10	7-1	7-5	6-7	5-8	5-4	4-7	4-6
	1-#5	40,000	8-4	9-11	7-8	8-0	7-2	6-3	5-10	4-9	4-8
		60,000	10-2	12-1	9-5	9-9	8-9	7-7	7-1	5-10	5-8
	2-#4 1-#6	40,000	9-5	11-3	8-8	9-0	8-1	7-0	6-7	5-5	5-3
		60,000	11-6	13-8	10-7	11-0	9-11	8-7	8-0	6-7	6-5
	2-#5	40,000	11-9	13-11	10-10	11-2	10-1	8-9	8-2	6-8	6-7
		60,000	16-4	19-5	15-0	15-7	14-0	12-2	11-4	9-3	9-0
	2-#6	40,000	16-0	19-0	14-9	15-3	13-9	11-10	10-10	8-3	8-0
		60,000	19-3	22-11	17-9	18-5	16-7	13-7	12-4	9-3	9-0
	Center distance A[k, l]		4-10	6-10	4-1	4-5	3-7	2-8	2-4	1-7	1-6
24	Span without stirrups[i, j]		9-2	11-9	8-7	8-11	8-0	6-11	6-6	5-7	5-6
	1-#5	40,000	8-11	10-10	8-6	8-9	7-11	6-10	6-5	5-3	5-2
		60,000	10-11	13-3	10-4	10-8	9-8	8-4	7-10	6-5	6-3
	2-#4 1-#6	40,000	10-1	12-3	9-7	9-11	8-11	7-9	7-3	6-0	5-10
		60,000	12-3	15-0	11-8	12-1	10-11	9-5	8-10	7-3	7-1
	2-#5	40,000	12-6	15-3	11-11	12-4	11-1	9-7	9-0	7-5	7-3
		60,000	17-6	21-3	16-7	17-2	15-6	13-5	12-7	10-4	10-1
	2-#6	40,000	17-2	20-11	16-3	16-10	15-3	13-2	12-4	9-7	9-4
		60,000	20-9	25-3	19-8	20-4	18-5	15-4	14-0	10-7	10-3
	Center distance A[k, l]		5-6	8-1	4-11	5-3	4-4	3-3	2-10	1-11	1-10

For SI: 1 inch = 25.4 mm, 1 foot = 304.8 mm, 1 pound per square foot = 0.0479 kPa, Grade 40 = 280 MPa; Grade 60 = 420 MPa.

Note: Top and bottom reinforcement for lintels without stirrups shown in shaded cells shall be equal to or greater than that required for lintel of the same depth and loading condition that has an allowable clear span that is equal to or greater than that of the lintel without stirrups.

a. See Table R608.3 for tolerances permitted from nominal thickness.

b. Table values are based on concrete with a minimum specified compressive strength of 2,500 psi. See Note j.

c. Table values are based on uniform loading. See Section R608.8.2 for lintels supporting concentrated loads.

d. Deflection criterion is $L/240$, where L is the clear span of the lintel in inches, or $^1/_2$-inch, whichever is less.

e. Linear interpolation is permitted between ground snow loads and between lintel depths.

f. DR indicates design required.

g. Lintel depth, D, is permitted to include the available height of wall located directly above the lintel, provided that the increased lintel depth spans the entire length of the lintel.

h. Stirrups shall be fabricated from reinforcing bars with the same yield strength as that used for the main longitudinal reinforcement.

i. Allowable clear span without stirrups applicable to all lintels of the same depth, D. Top and bottom reinforcement for lintels without stirrups shall be not less than the least amount of reinforcement required for a lintel of the same depth and loading condition with stirrups. All other spans require stirrups spaced at not more than $d/2$.

j. Where concrete with a minimum specified compressive strength of 3,000 psi is used, clear spans for lintels without stirrups shall be permitted to be multiplied by 1.05. If the increased span exceeds the allowable clear span for a lintel of the same depth and loading condition with stirrups, the top and bottom reinforcement shall be equal to or greater than that required for a lintel of the same depth and loading condition that has an allowable clear span that is equal to or greater than that of the lintel without stirrups that has been increased.

k. Center distance, A, is the center portion of the clear span where stirrups are not required. This is applicable to all longitudinal bar sizes and steel yield strengths.

l. Where concrete with a minimum specified compressive strength of 3,000 psi is used, center distance, A, shall be permitted to be multiplied by 1.10.

m. The maximum clear opening width between two solid wall segments shall be 18 feet. See Section R608.7.2.1. Lintel clear spans in the table greater than 18 feet are shown for interpolation and information only.

TABLE R608.8(5)
MAXIMUM ALLOWABLE CLEAR SPANS FOR 10-INCH-NOMINAL THICK FLAT LINTELS IN LOAD-BEARING WALLS[a, b, c, d, e, f, m]
ROOF CLEAR SPAN 40 FEET AND FLOOR CLEAR SPAN 32 FEET

LINTEL DEPTH, D[g] (inches)	NUMBER OF BARS AND BAR SIZE IN TOP AND BOTTOM OF LINTEL	STEEL YIELD STRENGTH[h], f_y (psi)	DESIGN LOADING CONDITION DETERMINED FROM TABLE R608.8(1)								
			1	2		3		4		5	
			Maximum ground snow load (psf)								
			—	30	70	30	70	30	70	30	70
			Maximum clear span of lintel (feet - inches)								
8	Span without stirrups[i, j]		6-0	7-2	4-7	4-10	4-1	3-1	2-11	2-3	2-2
	1-#4	40,000	4-3	4-9	3-7	3-9	3-4	2-9	2-7	2-1	2-1
		60,000	5-11	6-7	5-0	5-3	4-8	3-10	3-8	2-11	2-11
	1-#5	40,000	6-1	6-9	5-2	5-4	4-9	3-11	3-9	3-0	2-11
		60,000	7-4	8-1	6-3	6-5	5-9	4-9	4-6	3-7	3-7
	2-#4 1-#6	40,000	6-10	7-6	5-9	6-0	5-5	4-5	4-2	3-4	3-4
		60,000	8-2	9-1	6-11	7-2	6-6	5-4	5-0	4-1	4-0
	2-#5	40,000	8-4	9-3	7-1	7-4	6-7	5-5	5-1	4-1	4-0
		60,000	9-11	11-0	8-5	8-9	7-10	6-6	6-1	4-8	4-6
	2-#6	40,000	9-9	10-10	8-3	8-7	7-9	6-4	5-10	4-1	4-0
		60,000	DR	DR	DR	DR	DR	DR	DR	DR	DR
	Center distance $A^{k,l}$		2-6	3-1	1-10	1-11	1-7	1-1	0-11	0-7	0-7
12	Span without stirrups[i, j]		5-5	6-7	4-7	4-10	4-3	3-5	3-3	2-8	2-8
	1-#4	40,000	5-3	6-0	4-8	4-10	4-4	3-7	3-4	2-9	2-8
		60,000	6-5	7-4	5-8	5-10	5-3	4-4	4-1	3-4	3-3
	1-#5	40,000	6-6	7-6	5-9	6-0	5-5	4-5	4-2	3-5	3-4
		60,000	7-11	9-1	7-0	7-3	6-7	5-5	5-1	4-2	4-0
	2-#4 1-#6	40,000	7-4	8-5	6-6	6-9	6-1	5-0	4-9	3-10	3-9
		60,000	10-3	11-9	9-1	9-5	8-6	7-0	6-7	5-4	5-3
	2-#5	40,000	10-5	12-0	9-3	9-7	8-8	7-2	6-9	5-5	5-4
		60,000	12-7	14-5	11-2	11-6	10-5	8-7	8-1	6-6	6-4
	2-#6	40,000	12-4	14-2	10-11	11-4	10-2	8-5	7-8	5-7	5-5
		60,000	14-9	17-0	13-1	13-6	12-2	10-0	9-1	6-6	6-4
	Center distance $A^{k,l}$		3-9	4-11	2-11	3-2	2-7	1-9	1-7	1-0	1-0
16	Span without stirrups[i, j]		7-1	9-0	6-4	6-8	5-10	4-9	4-6	3-9	3-8
	1-#4	40,000	5-11	7-0	5-5	5-8	5-1	4-3	4-0	3-3	3-2
		60,000	7-3	8-7	6-8	6-11	6-3	5-2	4-10	3-11	3-10
	1-#5	40,000	7-4	8-9	6-9	7-0	6-4	5-3	4-11	4-0	3-11
		60,000	9-0	10-8	8-3	8-7	7-9	6-5	6-0	4-11	4-9
	2-#4 1-#6	40,000	8-4	9-11	7-8	7-11	7-2	5-11	5-7	4-6	4-5
		60,000	10-2	12-0	9-4	9-8	8-9	7-3	6-10	5-6	5-5
	2-#5	40,000	10-4	12-3	9-6	9-10	8-11	7-4	6-11	5-8	5-6
		60,000	14-4	17-1	13-3	13-8	12-4	10-3	9-8	7-10	7-8
	2-#6	40,000	14-1	16-9	13-0	13-5	12-2	10-1	9-6	7-0	6-10
		60,000	17-0	20-2	15-8	16-2	14-7	12-0	10-11	8-0	7-9
	Center distance[k, l]		4-9	6-8	4-0	4-4	3-6	2-5	2-2	1-5	1-4

(continued)

TABLE R608.8(5)—continued
MAXIMUM ALLOWABLE CLEAR SPANS FOR 10-INCH-NOMINAL THICK FLAT LINTELS IN LOAD-BEARING WALLS[a, b, c, d, e, f, m]
ROOF CLEAR SPAN 40 FEET AND FLOOR CLEAR SPAN 32 FEET

LINTEL DEPTH, D[g] (inches)	NUMBER OF BARS AND BAR SIZE IN TOP AND BOTTOM OF LINTEL	STEEL YIELD STRENGTH[h], f_y (psi)	DESIGN LOADING CONDITION DETERMINED FROM TABLE R608.8(1)								
			1	2		3		4		5	
			Maximum ground snow load (psf)								
			—	30	70	30	70	30	70	30	70
			Maximum clear span of lintel (feet - inches)								
20	Span without stirrups[i, j]		8-7	11-4	8-1	8-5	7-5	6-1	5-9	4-10	4-9
	1-#4	40,000	6-5	7-10	6-2	6-4	5-9	4-9	4-6	3-8	3-7
		60,000	7-10	9-7	7-6	7-9	7-0	5-10	5-6	4-5	4-4
	1-#5	40,000	8-0	9-9	7-8	7-11	7-2	5-11	5-7	4-6	4-5
		60,000	9-9	11-11	9-4	9-8	8-9	7-3	6-10	5-6	5-5
	2-#4 1-#6	40,000	9-0	11-1	8-8	8-11	8-1	6-9	6-4	5-2	5-0
		60,000	11-0	13-6	10-6	10-11	9-10	8-2	7-9	6-3	6-2
	2-#5	40,000	11-3	13-9	10-9	11-1	10-0	8-4	7-10	6-5	6-3
		60,000	15-8	19-2	15-0	15-6	14-0	11-8	11-0	8-11	8-9
	2-#6	40,000	15-5	18-10	14-8	15-2	13-9	11-5	10-9	8-6	8-3
		60,000	18-7	22-9	17-9	18-5	16-7	13-10	12-9	9-5	9-2
	Center distance A[k, l]		5-7	8-4	5-1	5-5	4-5	3-1	2-9	1-10	1-9
24	Span without stirrups[i, j]		9-11	13-7	9-9	10-2	9-0	7-5	7-0	5-10	5-9
	1-#5	40,000	8-6	10-8	8-5	8-8	7-10	6-6	6-2	5-0	4-11
		60,000	10-5	13-0	10-3	10-7	9-7	8-0	7-6	6-1	6-0
	2-#4 1-#6	40,000	9-7	12-1	9-6	9-9	8-10	7-5	7-0	5-8	5-6
		60,000	11-9	14-9	11-7	11-11	10-10	9-0	8-6	6-11	6-9
	2-#5	40,000	12-0	15-0	11-9	12-2	11-0	9-2	8-8	7-1	6-11
		60,000	14-7	18-3	14-4	14-10	13-5	11-2	10-7	8-7	8-5
	2-#6	40,000	14-3	17-11	14-1	14-7	13-2	11-0	10-4	8-5	8-3
		60,000	19-11	25-0	19-7	20-3	18-4	15-3	14-5	10-10	10-7
	Center distance A[k, l]		6-3	9-11	6-1	6-6	5-4	3-9	3-4	2-2	2-1

For SI: 1 inch = 25.4 mm, 1 foot = 304.8 mm, 1 pound per square foot = 0.0479 kPa, Grade 40 = 280 MPa, Grade 60 = 420 MPa.

Note: Top and bottom reinforcement for lintels without stirrups shown in shaded cells shall be equal to or greater than that required for lintel of the same depth and loading condition that has an allowable clear span that is equal to or greater than that of the lintel without stirrups.

a. See Table R608.3 for tolerances permitted from nominal thickness.

b. Table values are based on concrete with a minimum specified compressive strength of 2,500 psi. See Note j.

c. Table values are based on uniform loading. See Section R608.8.2 for lintels supporting concentrated loads.

d. Deflection criterion is $L/240$, where L is the clear span of the lintel in inches, or $^1/_2$-inch, whichever is less.

e. Linear interpolation is permitted between ground snow loads and between lintel depths.

f. DR indicates design required.

g. Lintel depth, D, is permitted to include the available height of wall located directly above the lintel, provided that the increased lintel depth spans the entire length of the lintel.

h. Stirrups shall be fabricated from reinforcing bars with the same yield strength as that used for the main longitudinal reinforcement.

i. Allowable clear span without stirrups applicable to all lintels of the same depth, D. Top and bottom reinforcement for lintels without stirrups shall be not less than the least amount of reinforcement required for a lintel of the same depth and loading condition with stirrups. All other spans require stirrups spaced at not more than $d/2$.

j. Where concrete with a minimum specified compressive strength of 3,000 psi is used, clear spans for lintels without stirrups shall be permitted to be multiplied by 1.05. If the increased span exceeds the allowable clear span for a lintel of the same depth and loading condition with stirrups, the top and bottom reinforcement shall be equal to or greater than that required for a lintel of the same depth and loading condition that has an allowable clear span that is equal to or greater than that of the lintel without stirrups that has been increased.

k. Center distance, A, is the center portion of the clear span where stirrups are not required. This is applicable to all longitudinal bar sizes and steel yield strengths.

l. Where concrete with a minimum specified compressive strength of 3,000 psi is used, center distance, A, shall be permitted to be multiplied by 1.10.

m. The maximum clear opening width between two solid wall segments shall be 18 feet. See Section R608.7.2.1. Lintel clear spans in the table greater than 18 feet are shown for interpolation and information only.

TABLE R608.8(6)
MAXIMUM ALLOWABLE CLEAR SPANS FOR 6-INCH-THICK WAFFLE-GRID LINTELS IN LOAD-BEARING WALLS[a, b, c, d, e, f, o]
MAXIMUM ROOF CLEAR SPAN 40 FEET AND MAXIMUM FLOOR SPAN 32 FEET

LINTEL DEPTH, D[g] (inches)	NUMBER OF BARS AND BAR SIZE IN TOP AND BOTTOM OF LINTEL	STEEL YIELD STRENGTH[h], f_y (psi)	DESIGN LOADING CONDITION DETERMINED FROM TABLE R608.8(1)								
			1	2		3		4		5	
			Maximum ground snow load (psf)								
			—	30	70	30	70	30	70	30	70
			Maximum clear span of lintel (feet - inches)								
8[i]	Span without stirrups[k, l]		2-7	2-9	2-0	2-1	2-0	2-0	2-0	2-0	2-0
	1-#4	40,000	5-2	5-5	4-0	4-3	3-7	3-3	2-11	2-4	2-3
		60,000	5-9	6-3	4-0	4-3	3-7	3-3	2-11	2-4	2-3
	1-#5	40,000	5-9	6-3	4-0	4-3	3-7	3-3	2-11	2-4	2-3
		60,000	5-9	6-3	4-0	4-3	3-7	3-3	2-11	2-4	2-3
	2-#4 1-#6	40,000	5-9	6-3	4-0	4-3	3-7	3-3	2-11	2-4	2-3
		60,000	DR	DR	DR	DR	DR	DR	DR	DR	DR
	Center distance $A^{m, n}$		0-9	0-10	0-6	0-6	0-5	0-5	0-4	STL	STL
12[i]	Span without stirrups[k, l]		2-11	3-1	2-6	2-7	2-5	2-4	2-3	2-1	2-0
	1-#4	40,000	5-9	6-2	4-8	4-10	4-4	4-1	3-9	3-2	3-1
		60,000	8-0	8-7	6-6	6-9	6-0	5-5	4-11	3-11	3-10
	1-#5	40,000	8-1	8-9	6-8	6-11	6-0	5-5	4-11	3-11	3-10
		60,000	9-1	10-3	6-8	7-0	6-0	5-5	4-11	3-11	3-10
	2-#4 1-#6	40,000	9-1	9-9	6-8	7-0	6-0	5-5	4-11	3-11	3-10
	Center distance $A^{m, n}$		1-3	1-5	0-10	0-11	0-9	0-8	0-6	STL	STL
	Span without stirrups[k, l]		4-0	4-4	3-6	3-7	3-4	3-3	3-1	2-10	2-10
16[i]	1-#4	40,000	6-7	7-3	5-6	5-9	5-2	4-10	4-6	3-9	3-8
		60,000	8-0	8-10	6-9	7-0	6-3	5-11	5-5	4-7	4-5
	1-#5	40,000	8-2	9-0	6-11	7-2	6-5	6-0	5-7	4-8	4-6
		60,000	11-5	12-6	9-3	9-9	8-4	7-7	6-10	5-6	5-4
	2-#4 1-#6	40,000	10-7	11-7	8-11	9-3	8-3	7-7	6-10	5-6	5-4
		60,000	12-2	14-0	9-3	9-9	8-4	7-7	6-10	5-6	5-4
	2-#5	40,000	12-2	14-2	9-3	9-9	8-4	7-7	6-10	5-6	5-4
		60,000	DR	DR	DR	DR	DR	DR	DR	DR	DR
	Center distance $A^{m, n}$		1-8	2-0	1-2	1-3	1-0	0-11	0-9	STL	STL
20[i]	Span without stirrups[k, l]		5-0	5-6	4-6	4-7	4-3	4-1	4-0	3-8	3-8
	1-#4	40,000	7-2	8-2	6-3	6-6	5-10	5-6	5-1	4-3	4-2
		60,000	8-11	9-11	7-8	7-11	7-1	6-8	6-2	5-2	5-0
	1-#5	40,000	9-1	10-2	7-9	8-1	7-3	6-10	6-4	5-4	5-2
		60,000	12-8	14-2	10-11	11-3	10-2	9-6	8-9	7-1	6-10
	2-#4 1-#6	40,000	10-3	11-5	8-9	9-1	8-2	7-8	7-1	6-0	5-10
		60,000	14-3	15-11	11-9	12-5	10-8	9-9	8-9	7-1	6-10
	2-#5	40,000	14-6	16-3	11-6	12-1	10-4	9-6	8-6	6-11	6-8
		60,000	DR	DR	DR	DR	DR	DR	DR	DR	DR
	Center distance $A^{m, n}$		2-0	2-6	1-6	1-7	1-3	1-1	1-0	STL	STL

(continued)

TABLE R608.8(6)—continued
MAXIMUM ALLOWABLE CLEAR SPANS FOR 6-INCH-THICK WAFFLE-GRID LINTELS IN LOAD-BEARING WALLS[a, b, c, d, e, f, o]
MAXIMUM ROOF CLEAR SPAN 40 FEET AND MAXIMUM FLOOR SPAN 32 FEET

LINTEL DEPTH, D[g] (inches)	NUMBER OF BARS AND BAR SIZE IN TOP AND BOTTOM OF LINTEL	STEEL YIELD STRENGTH[h], f_y (psi)	DESIGN LOADING CONDITION DETERMINED FROM TABLE R608.8(1)								
			1	2		3		4		5	
			Maximum ground snow load (psf)								
			—	30	70	30	70	30	70	30	70
			Maximum clear span of lintel (feet - inches)								
24w[j]	Span without stirrups[k, l]		6-0	6-8	5-5	5-7	5-3	5-0	4-10	4-6	4-5
	1-#4	40,000	7-11	9-0	6-11	7-2	6-5	6-0	5-7	4-8	4-7
		60,000	9-8	10-11	8-5	8-9	7-10	7-4	6-10	5-9	5-7
	1-#5	40,000	9-10	11-2	8-7	8-11	8-0	7-6	7-0	5-10	5-8
		60,000	12-0	13-7	10-6	10-10	9-9	9-2	8-6	7-2	6-11
	2-#4 1-#6	40,000	11-1	12-7	9-8	10-1	9-1	8-6	7-10	6-7	6-5
		60,000	15-6	17-7	13-6	14-0	12-8	11-10	10-8	8-7	8-4
	2-#5	40,000	15-6	17-11	12-8	13-4	11-6	10-7	9-7	7-10	7-7
		60,000	DR	DR	DR	DR	DR	DR	DR	DR	DR
	Center distance A[m, n]		2-4	3-0	1-9	1-11	1-6	1-4	1-2	STL	STL

For SI: 1 inch = 25.4 mm, 1 pound per square foot = 0.0479 kPa, 1 foot = 304.8 mm, Grade 40 = 280 MPa, Grade 60 = 420 MPa.

a. Where lintels are formed with waffle-grid forms, form material shall be removed, if necessary, to create top and bottom flanges of the lintel that are not less than 3 inches in depth (in the vertical direction), are not less than 5 inches in width for 6-inch-nominal waffle-grid forms and not less than 7 inches in width for 8-inch-nominal waffle-grid forms. See Figure R608.8(3). Flat form lintels shall be permitted in place of waffle-grid lintels. See Tables R608.8(2) through R608.8(5).

b. See Table R608.3 for tolerances permitted from nominal thicknesses and minimum dimensions and spacing of cores.

c. Table values are based on concrete with a minimum specified compressive strength of 2,500 psi. See Notes l and n. Table values are based on uniform loading. See Section R608.8.2 for lintels supporting concentrated loads.

d. Deflection criterion is $L/240$, where L is the clear span of the lintel in inches, or $^1/_2$-inch, whichever is less.

e. Linear interpolation is permitted between ground snow loads.

f. DR indicates design required. STL - stirrups required throughout lintel.

g. Lintel depth, D, is permitted to include the available height of wall located directly above the lintel, provided that the increased lintel depth spans the entire length of the lintel.

h. Stirrups shall be fabricated from reinforcing bars with the same yield strength as that used for the main longitudinal reinforcement.

i. Lintels less than 24 inches in depth with stirrups shall be formed from flat-walls forms [see Tables R608.8(2) through R608.8(5)], or, if necessary, form material shall be removed from waffle-grid forms so as to provide the required cover for stirrups. Allowable spans for lintels formed with flat-wall forms shall be determined from Tables R608.8(2) through R608.8(5).

j. Where stirrups are required for 24-inch deep lintels, the spacing shall not exceed 12 inches on center.

k. Allowable clear span without stirrups applicable to all lintels of the same depth, D. Top and bottom reinforcement for lintels without stirrups shall be not less than the least amount of reinforcement required for a lintel of the same depth and loading condition with stirrups. All other spans require stirrups spaced at not more than $d/2$.

l. Where concrete with a minimum specified compressive strength of 3,000 psi is used, clear spans for lintels without stirrups shall be permitted to be multiplied by 1.05. If the increased span exceeds the allowable clear span for a lintel of the same depth and loading condition with stirrups, the top and bottom reinforcement shall be equal to or greater than that required for a lintel of the same depth and loading condition that has an allowable clear span that is equal to or greater than that of the lintel without stirrups that has been increased.

m. Center distance, A, is the center portion of the span where stirrups are not required. This is applicable to all longitudinal bar sizes and steel yield strengths.

n. Where concrete with a minimum specified compressive strength of 3,000 psi is used, center distance, A, shall be permitted to be multiplied by 1.10.

o. The maximum clear opening width between two solid wall segments shall be 18 feet. See Section R608.7.2.1. Lintel spans in the table greater than 18 feet are shown for interpolation and information only.

TABLE R608.8(7)
MAXIMUM ALLOWABLE CLEAR SPANS FOR 8-INCH-THICK WAFFLE-GRID LINTELS IN LOAD-BEARING WALLS[a, b, c, d, e, f, o]
MAXIMUM ROOF CLEAR SPAN 40 FEET AND MAXIMUM FLOOR CLEAR SPAN 32 FEET

LINTEL DEPTH, D[g] (inches)	NUMBER OF BARS AND BAR SIZE IN TOP AND BOTTOM OF LINTEL	STEEL YIELD STRENGTH[h], f_y (psi)	DESIGN LOADING CONDITION DETERMINED FROM TABLE R608.8(1)								
			1	2		3		4		5	
				Maximum ground snow load (psf)							
				30	70	30	70	30	70	30	70
			Maximum clear span of lintel (feet - inches)								
8[i]	Span with stirrups[k, l]		2-6	2-9	2-0	2-1	2-0	2-0	2-0	2-0	2-0
	1-#4	40,000	4-5	4-9	3-7	3-9	3-4	3-0	2-10	2-3	2-2
		60,000	5-6	6-2	4-0	4-3	3-7	3-1	2-10	2-3	2-2
	1-#5	40,000	5-6	6-2	4-0	4-3	3-7	3-1	2-10	2-3	2-2
	Center distance $A^{m, n}$		0-9	0-10	0-6	0-6	0-5	0-4	0-4	STL	STL
12[i]	Span without stirrups[k, l]		2-10	3-1	2-6	2-7	2-5	2-3	2-2	2-0	2-0
	1-#4	40,000	5-7	6-1	4-8	4-10	4-4	3-11	3-8	3-0	2-11
		60,000	6-9	7-5	5-8	5-11	5-4	4-9	4-5	3-8	3-7
	1-#5	40,000	6-11	7-7	5-10	6-0	5-5	4-10	4-6	3-9	3-7
		60,000	8-8	10-1	6-7	7-0	5-11	5-2	4-8	3-9	3-7
	2-#4 1-#6	40,000	8-8	9-10	6-7	7-0	5-11	5-2	4-8	3-9	3-7
		60,000	8-8	10-1	6-7	7-0	5-11	5-2	4-8	3-9	3-7
	Center distance $A^{m, n}$		1-2	1-5	0-10	0-11	0-9	0-7	0-6	STL	STL
16[i]	Span without stirrups[k, l]		3-10	4-3	3-6	3-7	3-4	3-2	3-0	2-10	2-9
	1-#4	40,000	6-5	7-2	5-6	5-9	5-2	4-8	4-4	3-7	3-6
		60,000	7-9	8-9	6-9	7-0	6-3	5-8	5-3	4-4	4-3
	1-#5	40,000	7-11	8-11	6-10	7-1	6-5	5-9	5-4	4-5	4-4
		60,000	9-8	10-11	8-4	8-8	7-10	7-0	6-6	5-2	5-1
	2-#4 1-#6	40,000	9-0	10-1	7-9	8-0	7-3	6-6	6-1	5-0	4-11
		60,000	11-5	13-10	9-2	9-8	8-3	7-2	6-6	5-2	5-1
	Center distance $A^{m, n}$		1-6	1-11	1-2	1-3	1-0	0-10	0-8	STL	STL
20[i]	Span without stirrups[k, l]		4-10	5-5	4-5	4-7	4-3	4-0	3-11	3-7	3-7
	1-#4	40,000	7-0	8-1	6-3	6-5	5-10	5-3	4-11	4-1	3-11
		60,000	8-7	9-10	7-7	7-10	7-1	6-5	6-0	4-11	4-10
	1-#5	40,000	8-9	10-1	7-9	8-0	7-3	6-6	6-1	5-1	4-11
		60,000	10-8	12-3	9-6	9-10	8-10	8-0	7-5	6-2	6-0
	2-#4 1-#6	40,000	9-10	11-4	8-9	9-1	8-2	7-4	6-10	5-8	5-7
		60,000	12-0	13-10	10-8	11-0	9-11	9-0	8-4	6-8	6-6
	2-#5	40,000	12-3	14-1	10-10	11-3	10-2	8-11	8-1	6-6	6-4
		60,000	14-0	17-6	11-8	12-3	10-6	9-1	8-4	6-8	6-6
	Center distance $A^{m, n}$		1-10	2-5	1-5	1-7	1-3	1-0	0-11	STL	STL

(continued)

TABLE R608.8(7)—continued
MAXIMUM ALLOWABLE CLEAR SPANS FOR 8-INCH-THICK WAFFLE-GRID LINTELS IN LOAD-BEARING WALLS[a, b, c, d, e, f, o]
MAXIMUM ROOF CLEAR SPAN 40 FEET AND MAXIMUM FLOOR CLEAR SPAN 32 FEET

LINTEL DEPTH, D[g] (inches)	NUMBER OF BARS AND BAR SIZE IN TOP AND BOTTOM OF LINTEL	STEEL YIELD STRENGTH[h], f_y (psi)	DESIGN LOADING CONDITION DETERMINED FROM TABLE R608.8(1)								
			1	2		3		4		5	
				Maximum ground snow load (psf)							
				30	70	30	70	30	70	30	70
			Maximum clear span of lintel (feet - inches)								
24[j]	Span without stirrups[k, l]		5-9	6-7	5-5	5-6	5-2	4-11	4-9	4-5	4-4
	1-#4	40,000	7-6	8-10	6-10	7-1	6-5	5-9	5-5	4-6	4-4
		60,000	9-2	10-9	8-4	8-8	7-10	7-1	6-7	5-6	5-4
	1-#5	40,000	9-5	11-0	8-6	8-10	8-0	7-2	6-8	5-7	5-5
		60,000	11-5	13-5	10-5	10-9	9-9	8-9	8-2	6-10	6-8
	2-#4 1-#6	40,000	10-7	12-5	9-8	10-0	9-0	8-1	7-7	6-3	6-2
		60,000	12-11	15-2	11-9	12-2	11-0	9-11	9-3	7-8	7-6
	2-#5	40,000	13-2	15-6	12-0	12-5	11-2	9-11	9-2	7-5	7-3
		60,000	16-3	21-0	14-1	14-10	12-9	11-1	10-1	8-1	7-11
	2-#6	40,000	14-4	18-5	12-6	13-2	11-5	9-11	9-2	7-5	7-3
	Center distance A[m, n]		2-1	2-11	1-9	1-10	1-6	1-3	1-1	STL	STL

For SI: 1 inch = 25.4 mm, 1 pound per square foot = 0.0479 kPa, 1 foot = 304.8 mm, Grade 40 = 280 MPa, Grade 60 = 420 MPa.

a. Where lintels are formed with waffle-grid forms, form material shall be removed, if necessary, to create top and bottom flanges of the lintel that are not less than 3 inches in depth (in the vertical direction), are not less than 5 inches in width for 6-inch-nominal waffle-grid forms and not less than 7 inches in width for 8-inch-nominal waffle-grid forms. See Figure R608.8(3). Flat form lintels shall be permitted in lieu of waffle-grid lintels. See Tables R608.8(2) through R608.8(5).

b. See Table R608.3 for tolerances permitted from nominal thicknesses and minimum dimensions and spacing of cores.

c. Table values are based on concrete with a minimum specified compressive strength of 2,500 psi. See Notes 1 and n. Table values are based on uniform loading. See Section R608.8.2 for lintels supporting concentrated loads.

d. Deflection criterion is $L/240$, where L is the clear span of the lintel in inches, or $^1/_2$-inch, whichever is less.

e. Linear interpolation is permitted between ground snow loads.

f. DR indicates design required. STL - stirrups required throughout lintel.

g. Lintel depth, D, is permitted to include the available height of wall located directly above the lintel, provided that the increased lintel depth spans the entire length of the lintel.

h. Stirrups shall be fabricated from reinforcing bars with the same yield strength as that used for the main longitudinal reinforcement.

i. Lintels less than 24 inches in depth with stirrups shall be formed from flat-walls forms [see Tables R608.8(2) through R608.8(5)], or, if necessary, form material shall be removed from waffle-grid forms so as to provide the required cover for stirrups. Allowable spans for lintels formed with flat-wall forms shall be determined from Tables R608.8(2) through R608.8(5).

j. Where stirrups are required for 24-inch deep lintels, the spacing shall not exceed 12 inches on center.

k. Allowable clear span without stirrups applicable to all lintels of the same depth, D. Top and bottom reinforcement for lintels without stirrups shall be not less than the least amount of reinforcement required for a lintel of the same depth and loading condition with stirrups. All other spans require stirrups spaced at not more than $d/2$.

l. Where concrete with a minimum specified compressive strength of 3,000 psi is used, clear spans for lintels without stirrups shall be permitted to be multiplied by 1.05. If the increased span exceeds the allowable clear span for a lintel of the same depth and loading condition with stirrups, the top and bottom reinforcement shall be equal to or greater than that required for a lintel of the same depth and loading condition that has an allowable clear span that is equal to or greater than that of the lintel without stirrups that has been increased.

m. Center distance, A, is the center portion of the span where stirrups are not required. This is applicable to all longitudinal bar sizes and steel yield strengths.

n. Where concrete with a minimum specified compressive strength of 3,000 psi is used, center distance, A, shall be permitted to be multiplied by 1.10.

o. The maximum clear opening width between two solid wall segments shall be 18 feet. See Section R608.7.2.1. Lintel spans in the table greater than 18 feet are shown for interpolation and information only.

TABLE R608.8(8)
MAXIMUM ALLOWABLE CLEAR SPANS FOR 6-INCH-THICK SCREEN-GRID LINTELS IN LOAD-BEARING WALLS[a, b, c, d, e, f, p]
ROOF CLEAR SPAN 40 FEET AND FLOOR CLEAR SPAN 32 FEET

LINTEL DEPTH, D[g] (inches)	NUMBER OF BARS AND BAR SIZE IN TOP AND BOTTOM OF LINTEL	STEEL YIELD STRENGTH[h], f_y (psi)	DESIGN LOADING CONDITION DETERMINED FROM TABLE R608.8(1)								
			1	2		3		4		5	
				Maximum ground snow load (psf)							
				30	70	30	70	30	70	30	70
			Maximum clear span of lintel (feet - inches)								
12[i,j]	Span without stirrups		2-9	2-11	2-4	2-5	2-3	2-3	2-2	2-0	2-0
16[i,j]	Span without stirrups		3-9	4-0	3-4	3-5	3-2	3-1	3-0	2-9	2-9
20[i,j]	Span without stirrups		4-9	5-1	4-3	4-4	4-1	4-0	3-10	3-7	3-7
24[k]	Span without stirrups[l,m]		5-8	6-3	5-2	5-3	5-0	4-10	4-8	4-4	4-4
	1-#4	40,000	7-11	9-0	6-11	7-2	6-5	6-1	5-8	4-9	4-7
		60,000	9-9	11-0	8-5	8-9	7-10	7-5	6-10	5-9	5-7
	1-#5	40,000	9-11	11-2	8-7	8-11	8-0	7-7	7-0	5-11	5-9
		60,000	12-1	13-8	10-6	10-10	9-9	9-3	8-6	7-2	7-0
	2-#4 1-#6	40,000	11-2	12-8	9-9	10-1	9-1	8-7	7-11	6-8	6-6
		60,000	15-7	17-7	12-8	13-4	11-6	10-8	9-8	7-11	7-8
	2-#5	40,000	14-11	18-0	12-2	12-10	11-1	10-3	9-4	7-8	7-5
		60,000	DR	DR	DR	DR	DR	DR	DR	DR	DR
	Center distance A[n, o]		2-0	2-6	1-6	1-7	1-4	1-2	1-0	STL	STL

For SI: 1 inch = 25.4 mm, 1 pound per square foot = 0.0479 kPa, 1 foot = 304.8 mm, Grade 40 = 280 MPa, Grade 60 = 420 MPa.

a. Where lintels are formed with screen-grid forms, form material shall be removed if necessary to create top and bottom flanges of the lintel that are not less than 5 inches in width and not less than 2.5 inches in depth (in the vertical direction). See Figure R608.8(4). Flat form lintels shall be permitted in lieu of screen-grid lintels. See Tables R608.8(2) through R608.8(5).

b. See Table R608.3 for tolerances permitted from nominal thickness and minimum dimensions and spacings of cores.

c. Table values are based on concrete with a minimum specified compressive strength of 2,500 psi. See Notes m and o. Table values are based on uniform loading. See Section R608.7.2.1 for lintels supporting concentrated loads.

d. Deflection criterion is $L/240$, where L is the clear span of the lintel in inches, or $^1/_2$-inch, whichever is less.

e. Linear interpolation is permitted between ground snow loads.

f. DR indicates design required. STL indicates stirrups required throughout lintel.

g. Lintel depth, D, is permitted to include the available height of wall located directly above the lintel, provided that the increased lintel depth spans the entire length of the lintel.

h. Stirrups shall be fabricated from reinforcing bars with the same yield strength as that used for the main longitudinal reinforcement.

i. Stirrups are not required for lintels less than 24 inches in depth fabricated from screen-grid forms. Top and bottom reinforcement shall consist of a No. 4 bar having a yield strength of 40,000 psi or 60,000 psi.

j. Lintels between 12 and 24 inches in depth with stirrups shall be formed from flat-wall forms [see Tables R608.8(2) through R608.8(5)], or form material shall be removed from screen-grid forms to provide a concrete section comparable to that required for a flat wall. Allowable spans for flat lintels with stirrups shall be determined from Tables R608.8(2) through R608.8(5).

k. Where stirrups are required for 24-inch deep lintels, the spacing shall not exceed 12 inches on center.

l. Allowable clear span without stirrups applicable to all lintels of the same depth, D. Top and bottom reinforcement for lintels without stirrups shall be not less than the least amount of reinforcement required for a lintel of the same depth and loading condition with stirrups. All other spans require stirrups spaced at not more than 12 inches.

m. Where concrete with a minimum specified compressive strength of 3,000 psi is used, clear spans for lintels without stirrups shall be permitted to be multiplied by 1.05. If the increased span exceeds the allowable clear span for a lintel of the same depth and loading condition with stirrups, the top and bottom reinforcement shall be equal to or greater than that required for a lintel of the same depth and loading condition that has an allowable clear span that is equal to or greater than that of the lintel without stirrups that has been increased.

n. Center distance, A, is the center portion of the span where stirrups are not required. This is applicable to all longitudinal bar sizes and steel yield strengths.

o. Where concrete with a minimum specified compressive strength of 3,000 psi is used, center distance, A, shall be permitted to be multiplied by 1.10.

p. The maximum clear opening width between two solid wall segments shall be 18 feet. See Section R608.7.2.1. Lintel spans in the table greater than 18 feet are shown for interpolation and information only.

TABLE R608.8(9)
MAXIMUM ALLOWABLE CLEAR SPANS FOR FLAT LINTELS WITHOUT STIRRUPS IN NONLOAD-BEARING WALLS[a, b, c, d, e, g, h]

LINTEL DEPTH, D^1 (inches)	NUMBER OF BARS AND BAR SIZE	STEEL YIELD STRENGTH, f_y (psi)	NOMINAL WALL THICKNESS (inches)							
			4		6		8		10	
			Lintel Supporting							
			Concrete Wall	Light-framed Gable	Concrete Wall	Light-framed Gable	Concrete Wall	Light-framed Gable	Concrete Wall	Light-framed Gable
			Maximum Clear Span of Lintel (feet - inches)							
8	1-#4	40,000	10-11	11-5	9-7	11-2	7-10	9-5	7-3	9-2
		60,000	12-5	11-7	10-11	13-5	9-11	13-2	9-3	12-10
	1-#5	40,000	12-7	11-7	11-1	13-8	10-1	13-5	9-4	13-1
		60,000	DR	DR	12-7	16-4	11-6	14-7	10-9	14-6
	2-#4 1-#6	40,000	DR	DR	12-0	15-3	10-11	15-0	10-2	14-8
		60,000	DR	DR	DR	DR	12-2	15-3	11-7	15-3
	2-#5	40,000	DR	DR	DR	DR	12-7	16-7	11-9	16-7
		60,000	DR	DR	DR	DR	DR	DR	13-3	16-7
	2-#6	40,000	DR	DR	DR	DR	DR	DR	13-2	17-8
		60,000	DR	DR	DR	DR	DR	DR	DR	DR
12	1-#4	40,000	11-5	9-10	10-6	12-0	9-6	11-6	8-9	11-1
		60,000	11-5	9-10	11-8	13-3	10-11	14-0	10-1	13-6
	1-#5	40,000	11-5	9-10	11-8	13-3	11-1	14-4	10-3	13-9
		60,000	11-5	9-10	11-8	13-3	11-10	16-0	11-9	16-9
	2-#4 1-#6	40,000	DR	DR	11-8	13-3	11-10	16-0	11-2	15-6
		60,000	DR	DR	11-8	13-3	11-10	16-0	11-11	18-4
	2-#5	40,000	DR	DR	11-8	13-3	11-10	16-0	11-11	18-4
		60,000	DR	DR	11-8	13-3	11-10	16-0	11-11	18-4
16	1-#4	40,000	13-6	13-0	11-10	13-8	10-7	12-11	9-11	12-4
		60,000	13-6	13-0	13-8	16-7	12-4	15-9	11-5	15-0
	1-#5	40,000	13-6	13-0	13-10	17-0	12-6	16-1	11-7	15-4
		60,000	13-6	13-0	13-10	17-1	14-0	19-7	13-4	18-8
	2-#4 1-#6	40,000	13-6	13-0	13-10	17-1	13-8	18-2	12-8	17-4
		60,000	13-6	13-0	13-10	17-1	14-0	20-3	14-1	—
	2-#5	40,000	13-6	13-0	13-10	17-1	14-0	20-3	14-1	—
		60,000	DR	DR	13-10	17-1	14-0	20-3	14-1	—
20	1-#4	40,000	14-11	15-10	13-0	14-10	11-9	13-11	10-10	13-2
		60,000	15-3	15-10	14-11	18-1	13-6	17-0	12-6	16-2
	1-#5	40,000	15-3	15-10	15-2	18-6	13-9	17-5	12-8	16-6
		60,000	15-3	15-10	15-8	20-5	15-9	—	14-7	20-1
	2-#4 1-#6	40,000	15-3	15-10	15-8	20-5	14-11	—	13-10	—
		60,000	15-3	15-10	15-8	20-5	15-10	—	15-11	—
	2-#5	40,000	15-3	15-10	15-8	20-5	15-10	—	15-11	—
		60,000	15-3	15-10	15-8	20-5	15-10	—	15-11	—

(continued)

TABLE R608.8(9)—continued
MAXIMUM ALLOWABLE CLEAR SPANS FOR FLAT LINTELS WITHOUT STIRRUPS IN NONLOAD-BEARING WALLS[a, b, c, d, e, g, h]

LINTEL DEPTH, D[f] (inches)	NUMBER OF BARS AND BAR SIZE	STEEL YIELD STRENGTH, f_y (psi)	NOMINAL WALL THICKNESS (inches)							
			4		6		8		10	
			Lintel Supporting							
			Concrete Wall	Light-framed Gable	Concrete Wall	Light-framed Gable	Concrete Wall	Light-framed Gable	Concrete Wall	Light-framed Gable
			Maximum Clear Span of Lintel (feet - inches)							
24	1-#4	40,000	16-1	17-1	13-11	15-10	12-7	14-9	11-8	13-10
		60,000	16-11	18-5	16-1	19-3	14-6	18-0	13-5	17-0
	1-#5	40,000	16-11	18-5	16-3	19-8	14-9	18-5	13-8	17-4
		60,000	16-11	18-5	17-4	—	17-0	—	15-8	—
	2-#4 1-#6	40,000	16-11	18-5	17-4	—	16-1	—	14-10	—
		60,000	16-11	18-5	17-4	—	17-6	—	17-1	—
	2-#5	40,000	16-11	18-5	17-4	—	17-6	—	17-4	—
		60,000	16-11	18-5	17-4	—	17-6	—	17-8	—

For SI: 1 inch = 25.4 mm, 1 foot = 304.8 mm, Grade 40 = 280 MPa, Grade 60 = 420 MPa.

a. See Table R608.3 for tolerances permitted from nominal thickness.
b. Table values are based on concrete with a minimum specified compressive strength of 2,500 psi. See Note e.
c. Deflection criterion is $L/240$, where L is the clear span of the lintel in inches, or $^1/_2$ inch, whichever is less.
d. Linear interpolation between lintels depths, D, is permitted provided the two cells being used to interpolate are shaded.
e. Where concrete with a minimum specified compressive strength of 3,000 psi is used, spans in cells that are shaded shall be permitted to be multiplied by 1.05.
f. Lintel depth, D, is permitted to include the available height of wall located directly above the lintel, provided that the increased lintel depth spans the entire length of the lintel.
g. DR indicates design required.
h. The maximum clear opening width between two solid wall segments shall be 18 feet. See Section R608.7.2.1. Lintel spans in the table greater than 18 feet are shown for interpolation and information purposes only.

TABLE R608.8(10)
MAXIMUM ALLOWABLE CLEAR SPANS FOR WAFFLE-GRID AND SCREEN-GRID LINTELS WITHOUT STIRRUPS IN NONLOAD-BEARING WALLS[c, d, e, f, g]

LINTEL DEPTH[h], D (inches)	FORM TYPE AND NOMINAL WALL THICKNESS (inches)					
	6-inch Waffle-grid[a]		8-inch Waffle-grid[a]		6-inch Screen-grid[b]	
	Lintel supporting					
	Concrete Wall	Light-framed Gable	Concrete Wall	Light-framed Gable	Concrete Wall	Light-framed Gable
	Maximum Clear Span of Lintel (feet - inches)					
8	10-3	8-8	8-8	8-3	—	—
12	9-2	7-6	7-10	7-1	8-8	6-9
16	10-11	10-0	9-4	9-3	—	—
20	12-5	12-2	10-7	11-2	—	—
24	13-9	14-2	11-10	12-11	13-0	12-9

For SI: 1 inch = 25.4 mm, 1 foot = 304.8 mm, Grade 40 = 280 MPa, Grade 60 = 420 MPa.

a. Where lintels are formed with waffle-grid forms, form material shall be removed, if necessary, to create top and bottom flanges of the lintel that are not less than 3 inches in depth (in the vertical direction), are not less than 5 inches in width for 6-inch waffle-grid forms and not less than 7 inches in width for 8-inch waffle-grid forms. See Figure R608.8(3). Flat form lintels shall be permitted in lieu of waffle-grid lintels. See Tables R608.8(2) through R608.8(5).
b. Where lintels are formed with screen-grid forms, form material shall be removed if necessary to create top and bottom flanges of the lintel that are not less than 5 inches in width and not less than 2.5 inches in depth (in the vertical direction). See Figure R608.8(4). Flat form lintels shall be permitted in lieu of screen-grid lintels. See Tables R608.8(2) through R608.8(5).
c. See Table R608.3 for tolerances permitted from nominal thickness and minimum dimensions and spacing of cores.
d. Table values are based on concrete with a minimum specified compressive strength of 2,500 psi. See Note g.
e. Deflection criterion is $L/240$, where L is the clear span of the lintel in inches, or $^1/_2$-inch, whichever is less.
f. Top and bottom reinforcement shall consist of a No. 4 bar having a minimum yield strength of 40,000 psi.
g. Where concrete with a minimum specified compressive strength of 3,000 psi is used, spans in shaded cells shall be permitted to be multiplied by 1.05.
h. Lintel depth, D, is permitted to include the available height of wall located directly above the lintel, provided that the increased lintel depth spans the entire length of the lintel.

R608.9 Requirements for connections–general. Concrete walls shall be connected to footings, floors, ceilings and roofs in accordance with this section.

R608.9.1 Connections between concrete walls and light-framed floor, ceiling and roof systems. Connections between concrete walls and light-framed floor, ceiling and roof systems using the prescriptive details of Figures R608.9(1) through R608.9(12) shall comply with this section and Sections R608.9.2 and R608.9.3.

R608.9.1.1 Anchor bolts. Anchor bolts used to connect light-framed floor, ceiling and roof systems to concrete walls in accordance with Figures R608.9(1) through R608.9(12) shall have heads, or shall be rods with threads on both ends with a hex or square nut on the end embedded in the concrete. Bolts and threaded rods shall comply with Section R608.5.2.2. Anchor bolts with J- or L-hooks shall not be used where the connection details in these figures are used.

R608.9.1.2 Removal of stay-in-place form material at bolts. Holes in stay-in-place forms for installing bolts for attaching face-mounted wood ledger boards to the wall shall be not less than 4 inches (102 mm) in diameter for forms not greater than $1^1/_2$ inches (38 mm) in thickness, and increased 1 inch (25 mm) in diameter for each $^1/_2$-inch (12.7 mm) increase in form thickness. Holes in stay-in-place forms for installing bolts for attaching face-mounted cold-formed steel tracks to the wall shall be not less than 4 inches (102 mm) square. The wood ledger board or steel track shall be in direct contact with the concrete at each bolt location.

Exception: A vapor retarder or other material less than or equal to $^1/_{16}$ inch (1.6 mm) in thickness is permitted to be installed between the wood ledger or cold-formed track and the concrete.

R608.9.2 Connections between concrete walls and light-framed floor systems. Connections between concrete walls and light-framed floor systems shall be in accordance with one of the following:

1. For floor systems of wood frame construction, the provisions of Section R608.9.1 and the prescriptive details of Figures R608.9(1) through R608.9(4), where permitted by the tables accompanying those figures. Portions of connections of wood-framed floor systems not noted in the figures shall be in accordance with Section R502, or AWC WFCM, if applicable. Wood framing members shall be of a species having a specific gravity equal to or greater than 0.42.
2. For floor systems of cold-formed steel construction, the provisions of Section R608.9.1 and the prescriptive details of Figures R608.9(5) through R608.9(8), where permitted by the tables accompanying those figures. Portions of connections of cold-formed-steel framed floor systems not noted in the figures shall be in accordance with Section R505, or AISI S230, if applicable.
3. Proprietary connectors selected to resist loads and load combinations in accordance with Appendix A (ASD) or Appendix B (LRFD) of PCA 100.
4. An engineered design using loads and load combinations in accordance with Appendix A (ASD) or Appendix B (LRFD) of PCA 100.
5. An engineered design using loads and material design provisions in accordance with this code, or in accordance with ASCE 7, ACI 318, and AWC NDS for wood frame construction or AISI S100 for cold-formed steel frame construction.

R608.9.3 Connections between concrete walls and light-framed ceiling and roof systems. Connections between concrete walls and light-framed ceiling and roof systems shall be in accordance with one of the following:

1. For ceiling and roof systems of wood frame construction, the provisions of Section R608.9.1 and the prescriptive details of Figures R608.9(9) and R608.9(10), where permitted by the tables accompanying those figures. Portions of connections of wood-framed ceiling and roof systems not noted in the figures shall be in accordance with Section R802, or AWC WFCM, if applicable. Wood framing members shall be of a species having a specific gravity equal to or greater than 0.42.
2. For ceiling and roof systems of cold-formed-steel construction, the provisions of Section R608.9.1 and the prescriptive details of Figures R608.9(11) and R608.9(12), where permitted by the tables accompanying those figures. Portions of connections of cold-formed-steel framed ceiling and roof systems not noted in the figures shall be in accordance with Section R804, or AISI S230, if applicable.
3. Proprietary connectors selected to resist loads and load combinations in accordance with Appendix A (ASD) or Appendix B (LRFD) of PCA 100.
4. An engineered design using loads and load combinations in accordance with Appendix A (ASD) or Appendix B (LRFD) of PCA 100.
5. An engineered design using loads and material design provisions in accordance with this code, or in accordance with ASCE 7, ACI 318, and AWC NDS for wood-frame construction or AISI S100 for cold-formed-steel frame construction.

R608.10 Floor, roof and ceiling diaphragms. Floors and roofs in buildings with exterior walls of concrete shall be designed and constructed as diaphragms. Where gable-end walls occur, ceilings shall be designed and constructed as diaphragms. The design and construction of floors, roofs and ceilings of wood framing or cold-formed-steel framing serving as diaphragms shall comply with the applicable requirements of this code, or AWC WFCM or AISI S230, if applicable. Wood framing members shall be of a species having a specific gravity equal to or greater than 0.42.

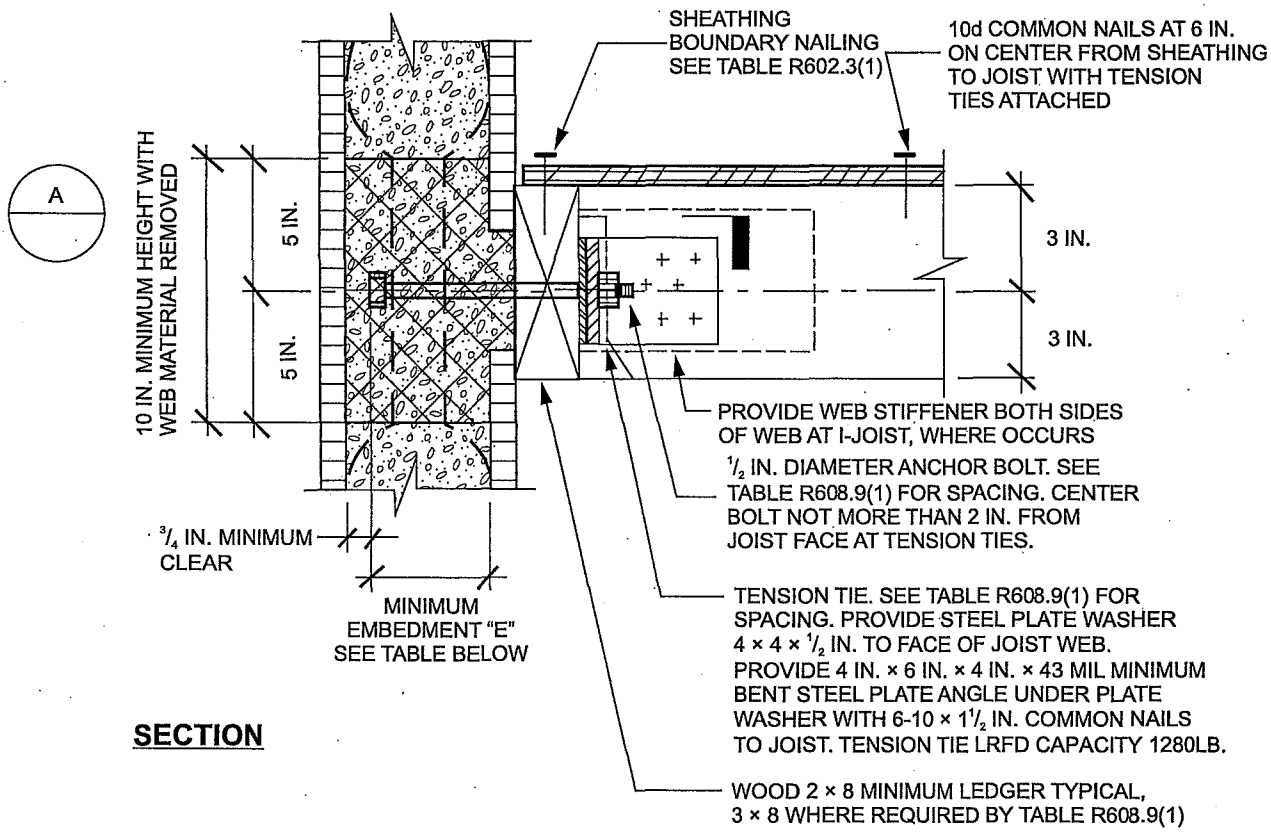

SECTION

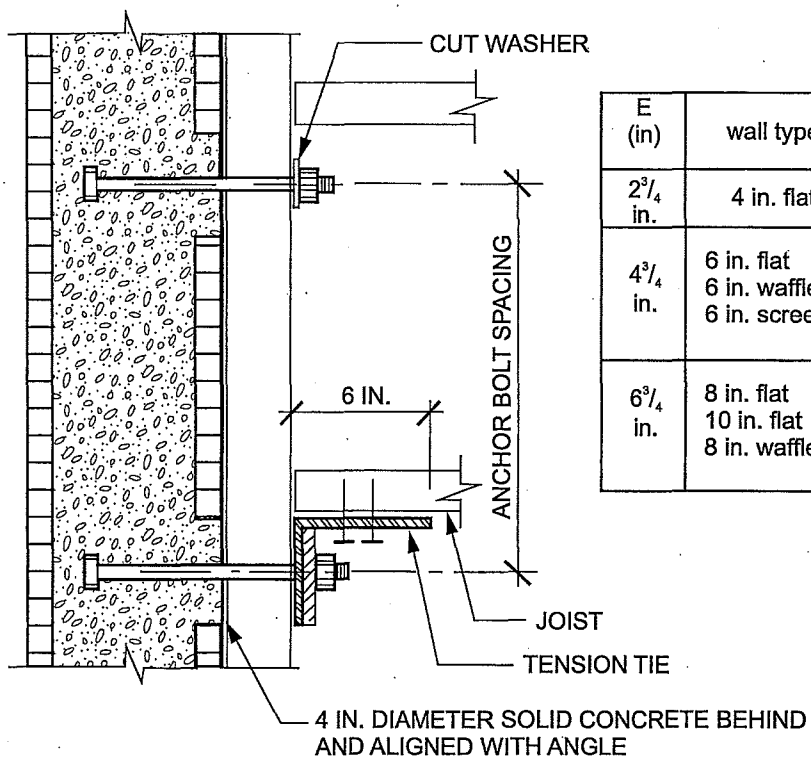

E (in)	wall type
2 3/4 in.	4 in. flat
4 3/4 in.	6 in. flat 6 in. waffle-grid 6 in. screen-grid
6 3/4 in.	8 in. flat 10 in. flat 8 in. waffle-grid

DETAIL A – PLAN VIEW

For SI: 1 mil = 0.0254 mm, 1 inch = 25.4 mm, 1 pound-force = 4.448 N.

FIGURE R608.9(1)
WOOD-FRAMED FLOOR TO SIDE OF CONCRETE WALL, FRAMING PERPENDICULAR

2770

TABLE R608.9(1)
WOOD-FRAMED FLOOR TO SIDE OF CONCRETE WALL, FRAMING PERPENDICULAR[a, b]

ANCHOR BOLT SPACING (inches)	TENSION TIE SPACING (inches)	BASIC WIND SPEED (mph)					
		115B	120B	130B	140B	150B	160B
				110C	119C	127C	136C
					110D	117D	125D
12	12						
12	24						
12	36						
12	48						
16	16						
16	32						
16	48						
19.2	19.2						
19.2	38.4						

For SI: 1 inch = 25.4 mm, 1 mile per hour = 0.447 m/s.

a. This table is for use with the detail in Figure R608.9(1). Use of this detail is permitted where a cell is not shaded and prohibited where shaded.

b. Wall design per other provisions of Section R608 is required.

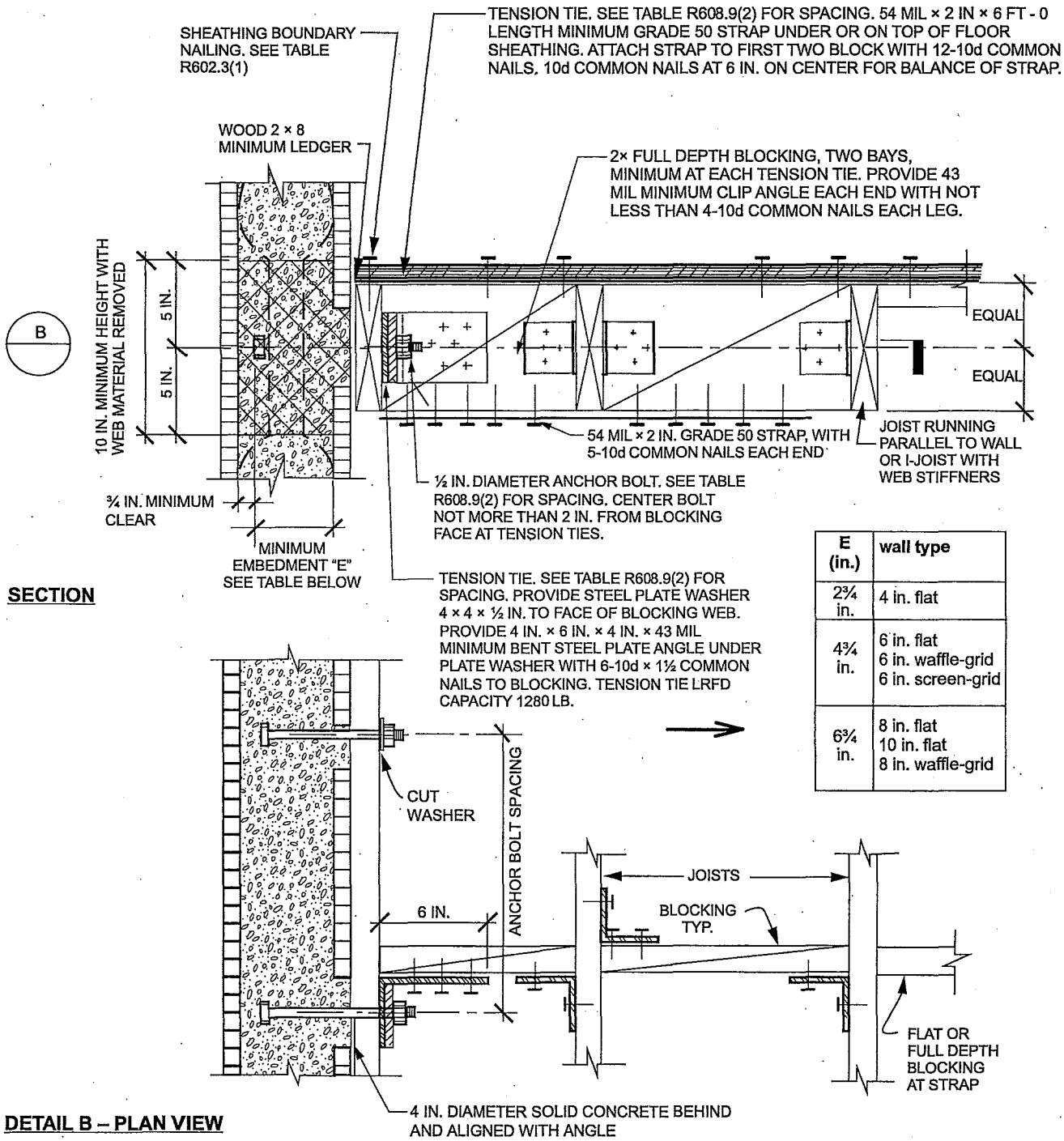

E (in.)	wall type
2¾ in.	4 in. flat
4¾ in.	6 in. flat 6 in. waffle-grid 6 in. screen-grid
6¾ in.	8 in. flat 10 in. flat 8 in. waffle-grid

For SI: 1 mil = 0.0254 mm, 1 inch = 25.4 mm, 1 foot = 304.8 mm, 1 pound-force = 4.448 N.

FIGURE R608.9(2)
WOOD-FRAMED FLOOR TO SIDE OF CONCRETE WALL, FRAMING PARALLEL

2772

TABLE R608.9(2)
WOOD-FRAMED FLOOR TO SIDE OF CONCRETE WALL, FRAMING PARALLEL[a, b]

ANCHOR BOLT SPACING (inches)	TENSION TIE SPACING (inches)	BASIC WIND SPEED (mph) AND WIND EXPOSURE CATEGORY					
		115b	120B	130B	140B	150B	160B
				110C	119C	127C	136C
					110D	117D	125D
12	12						
12	24						
12	36						
12	48						
16	16						
16	32						
16	48						
19.2	19.2						
19.2	38.4						
24	24						
24	48						

For SI: 1 inch = 25.4 mm, 1 mile per hour = 0.447 m/s.

a. This table is for use with the detail in Figure R608.9(2). Use of this detail is permitted where a cell is not shaded and prohibited where shaded.

b. Wall design per other provisions of Section R608 is required.

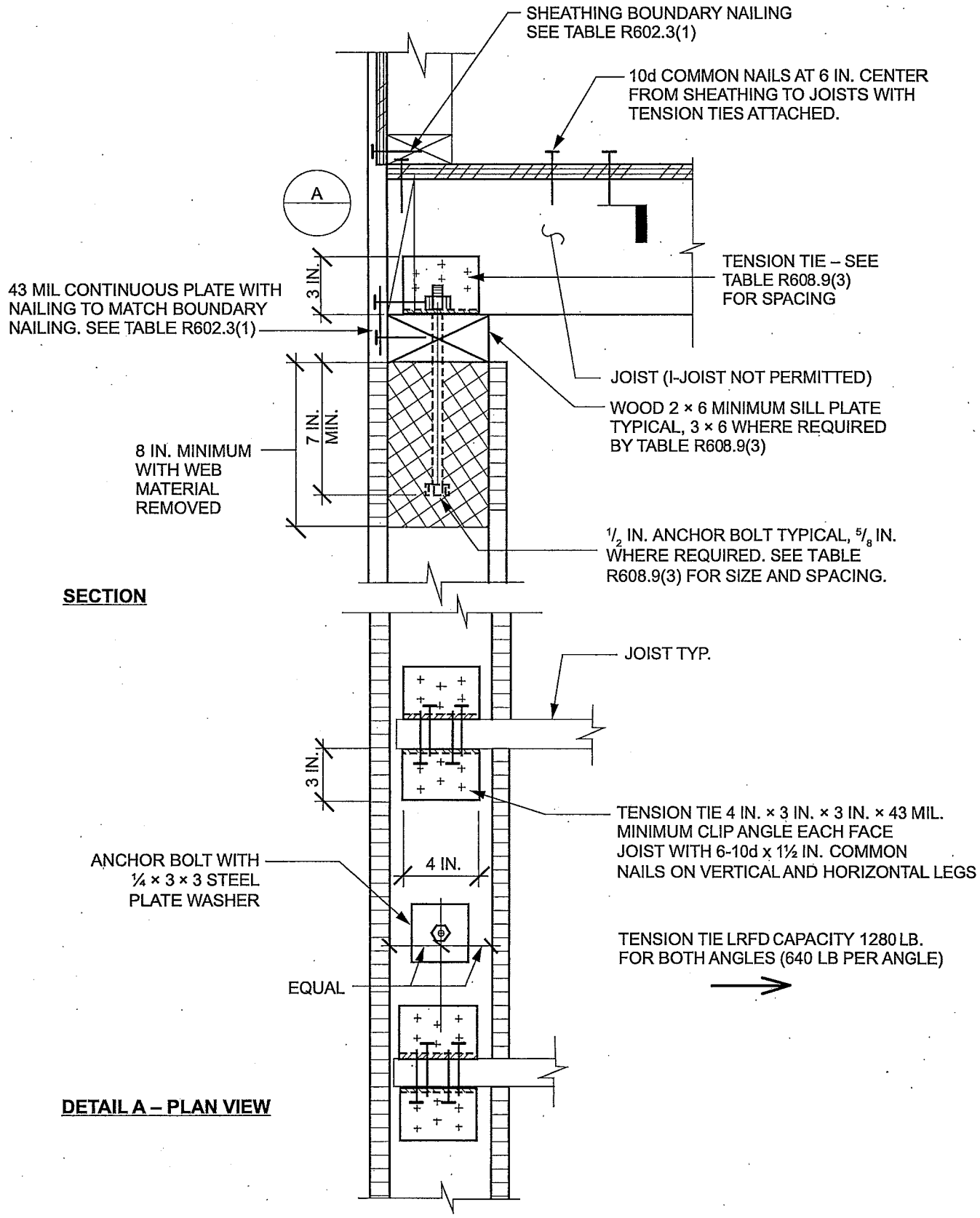

For SI: 1 mil = 0.0254 mm, 1 inch = 25.4 mm, 1 pound-force = 4.448 N.

FIGURE R608.9(3)
WOOD-FRAMED FLOOR TO TOP OF CONCRETE WALL FRAMING, PERPENDICULAR

2774

TABLE R608.9(3)
WOOD-FRAMED FLOOR TO TOP OF CONCRETE WALL, FRAMING PERPENDICULAR[a, b, c, d, e]

ANCHOR BOLT SPACING (inches)	TENSION TIE SPACING (inches)	BASIC WIND SPEED (mph) AND WIND EXPOSURE CATEGORY					
		115B	120B	130B	140B	150B	160B
				110C	119C	127C	136C
					110D	117D	125D
12	12						6
12	24					6	6
12	36					6	6
12	48				6	6	6
16	16					6	6A
16	32				6	6	6A
16	48			6	6	6	6A
19.2	19.2				6A	6A	6B
19.2	38.4			6	6A	6A	6B
24	24			6A	6B	6B	6B
24	48		6	6A	6B	6B	8B

For SI: 1 inch = 25.4 mm, 1 mile per hour = 0.447 m/s.

a. This table is for use with the detail in Figure R608.9(3). Use of this detail is permitted where cell is not shaded.

b. Wall design per other provisions in Section R608 is required.

c. For wind design, minimum 4-inch-nominal wall is permitted in unshaded cells that do not contain a number.

d. Numbers 6 and 8 indicate minimum permitted nominal wall thickness in inches necessary to develop required strength (capacity) of connection. As a minimum, this nominal thickness shall occur in the portion of the wall indicated by the cross-hatching in Figure R608.9(3). For the remainder of the wall, see Note b.

e. Letter "A" indicates that a minimum nominal 3 × 6 sill plate is required. Letter "B" indicates that a $^5/_8$-inch-diameter anchor bolt and a minimum nominal 3 × 6 sill plate are required.

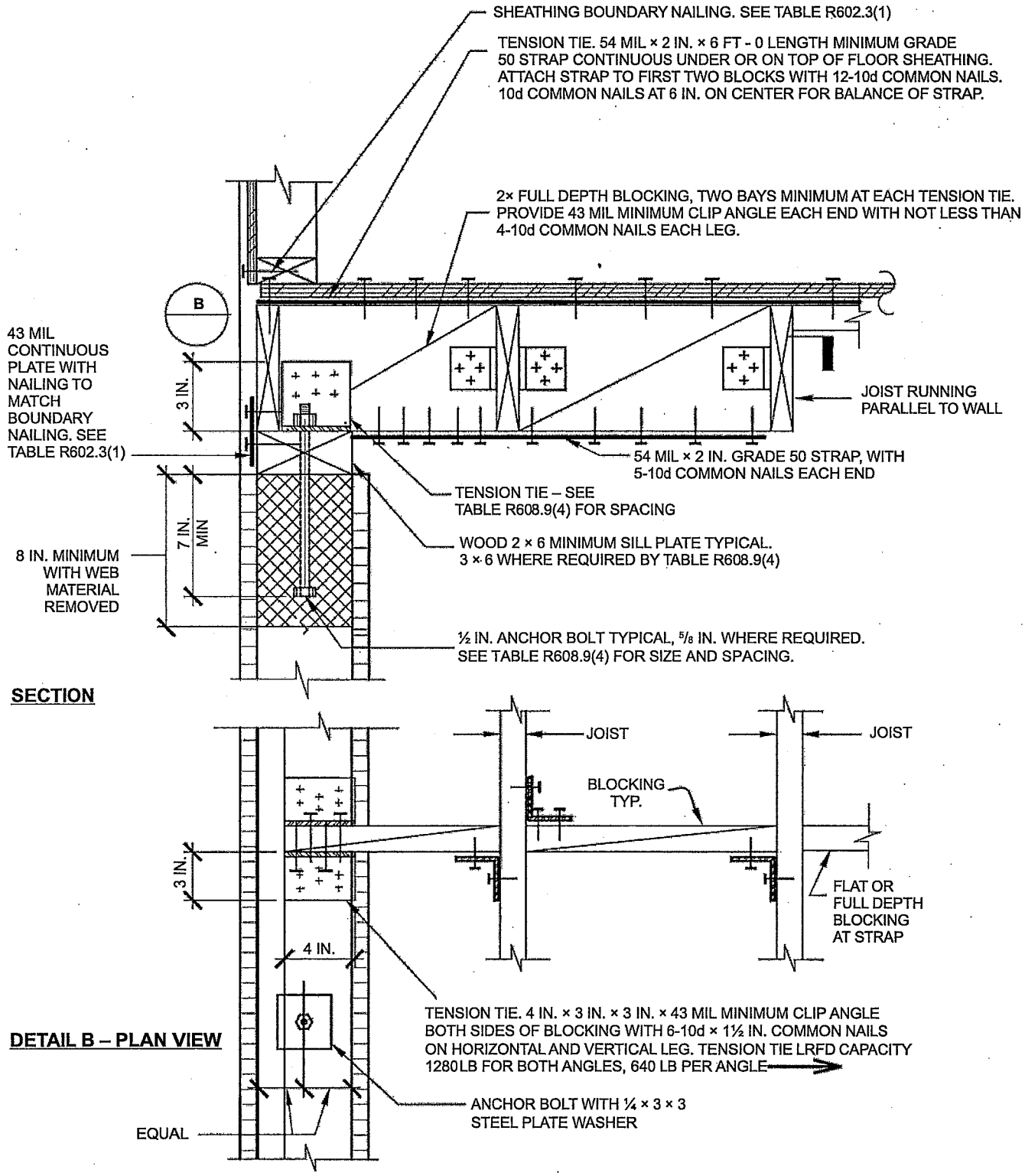

For SI: 1 mil = 0.0254 mm, 1 inch = 25.4 mm, 1 foot = 304.8 mm, 1 pound-force = 4.448 N.

FIGURE R608.9(4)
WOOD-FRAMED FLOOR TO TOP OF CONCRETE WALL, FRAMING PARALLEL

2776

TABLE R608.9(4)
WOOD-FRAMED FLOOR TO TOP OF CONCRETE WALL, FRAMING PARALLEL[a, b, c, d, e]

ANCHOR BOLT SPACING (inches)	TENSION TIE SPACING (inches)	BASIC WIND SPEED (mph) AND WIND EXPOSURE CATEGORY					
		115B	120B	130B	140B	150B	160B
				110C	119C	127C	136C
					110D	117D	125D
12	12						6
12	24					6	6
12	36					6	6
12	48				6	6	6
16	16					6	6A
16	32				6	6	6A
16	48			6	6	6	6A
19.2	19.2				6A	6A	6B
19.2	38.4			6	6A	6A	6B
24	24			6A	6B	6B	6B
24	48		6	6A	6B	6B	8B

For SI: 1 inch = 25.4 mm, 1 mile per hour = 0.447 m/s.

a. This table is for use with the detail in Figure R608.9(4). Use of this detail is permitted where a cell is not shaded.

b. Wall design per other provisions of Section R608 is required.

c. For wind design, minimum 4-inch-nominal wall is permitted in unshaded cells that do not contain a number.

d. Numbers 6 and 8 indicate minimum permitted nominal wall thickness in inches necessary to develop required strength (capacity) of connection. As a minimum, this nominal thickness shall occur in the portion of the wall indicated by the cross-hatching in Figure R608.9(4). For the remainder of the wall, see Note b.

e. Letter "A" indicates that a minimum nominal 3 × 6 sill plate is required. Letter "B" indicates that a $^5/_8$-inch-diameter anchor bolt and a minimum nominal 3 × 6 sill plate are required.

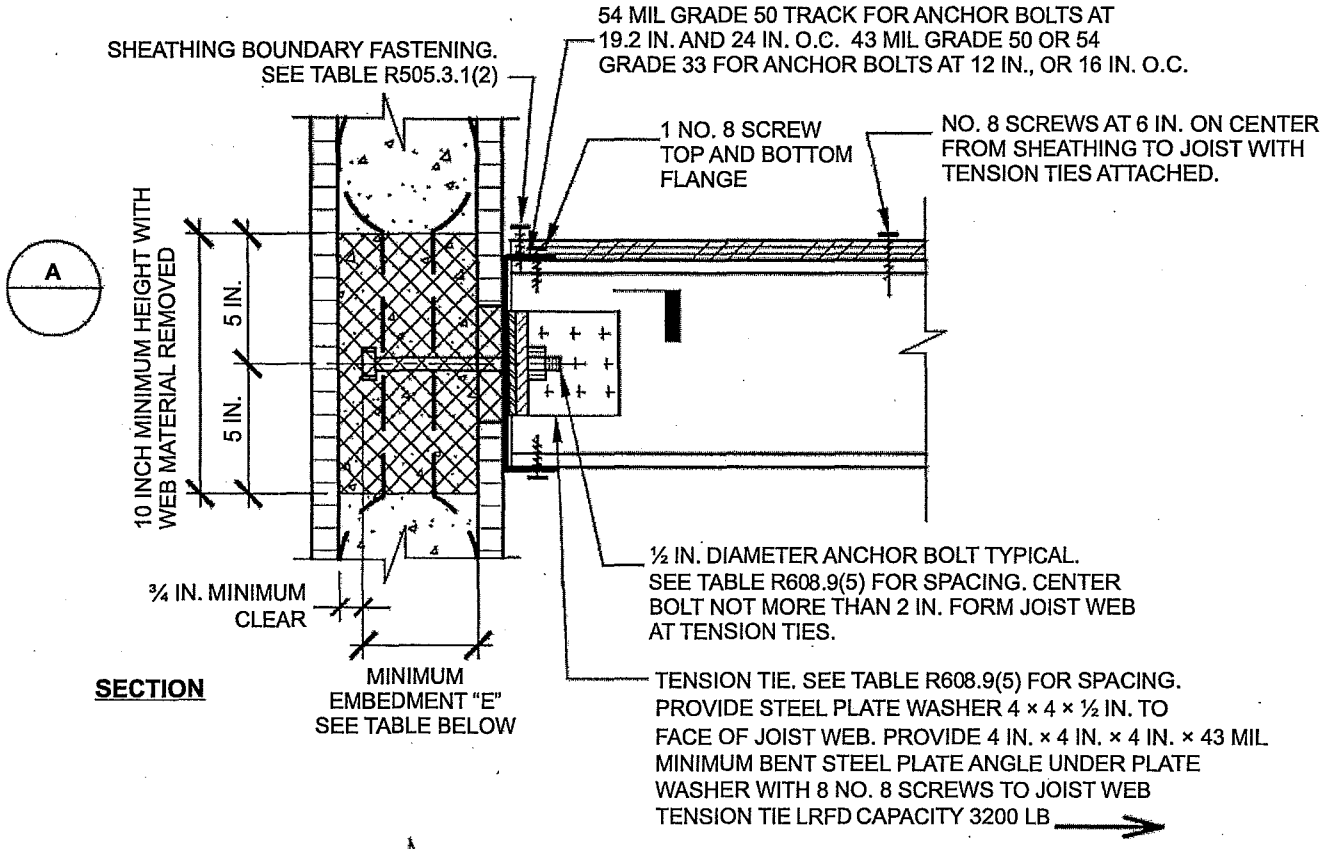

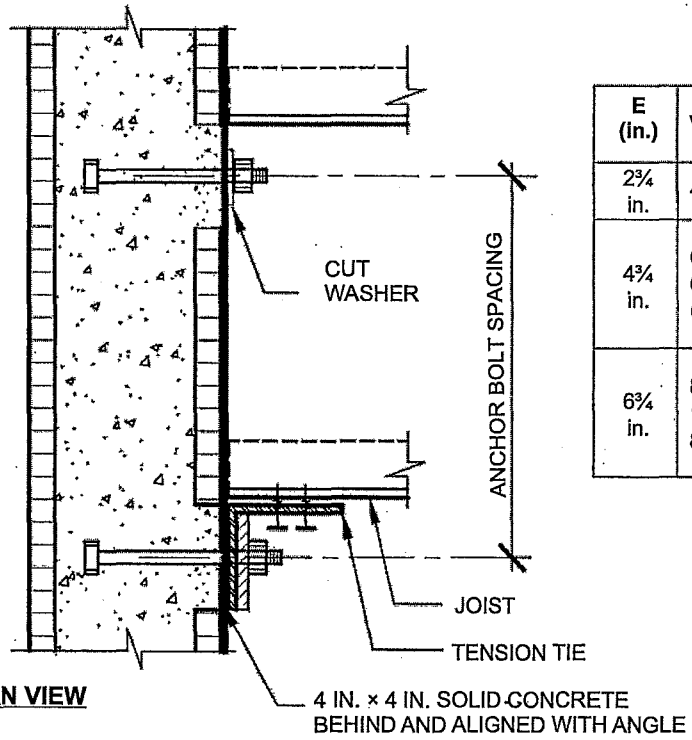

DETAIL A – PLAN VIEW

E (in.)	wall type
2¾ in.	4 in. flat
4¾ in.	6 in. flat 6 in. waffle-grid 6 in. screen-grid
6¾ in.	8 in. flat 10 in. flat 8 in. waffle-grid

For SI: 1 mil = 0.0254 mm, 1 inch = 25.4 mm, 1 pound-force = 4.448 N.

FIGURE R608.9(5)
COLD-FORMED STEEL FLOOR TO SIDE OF CONCRETE WALL, FRAMING PERPENDICULAR

2778

TABLE R608.9(5)
COLD-FORMED STEEL-FRAMED FLOOR TO SIDE OF CONCRETE WALL, FRAMING PERPENDICULAR[a, b, c]

ANCHOR BOLT SPACING (inches)	TENSION TIE SPACING (inches)	BASIC WIND SPEED (mph) AND WIND EXPOSURE CATEGORY					
		115B	120B	130B	140B	150B	160B
				110C	119C	127C	136C
					110D	117D	125D
12	12						
12	24						
12	36						
12	48						
16	16						
16	32						
16	48						
19.2	19.2						
19.2	38.4						
24	24						
24	48						

For SI: 1 inch = 25.4 mm, 1 mile per hour = 0.4470 m/s.

a. This table is for use with the detail in Figure R608.9(5). Use of this detail is permitted where a cell is not shaded.

b. Wall design per other provisions of Section R608 is required.

c. For wind design, minimum 4-inch-nominal wall is permitted in unshaded cells that do not contain a number.

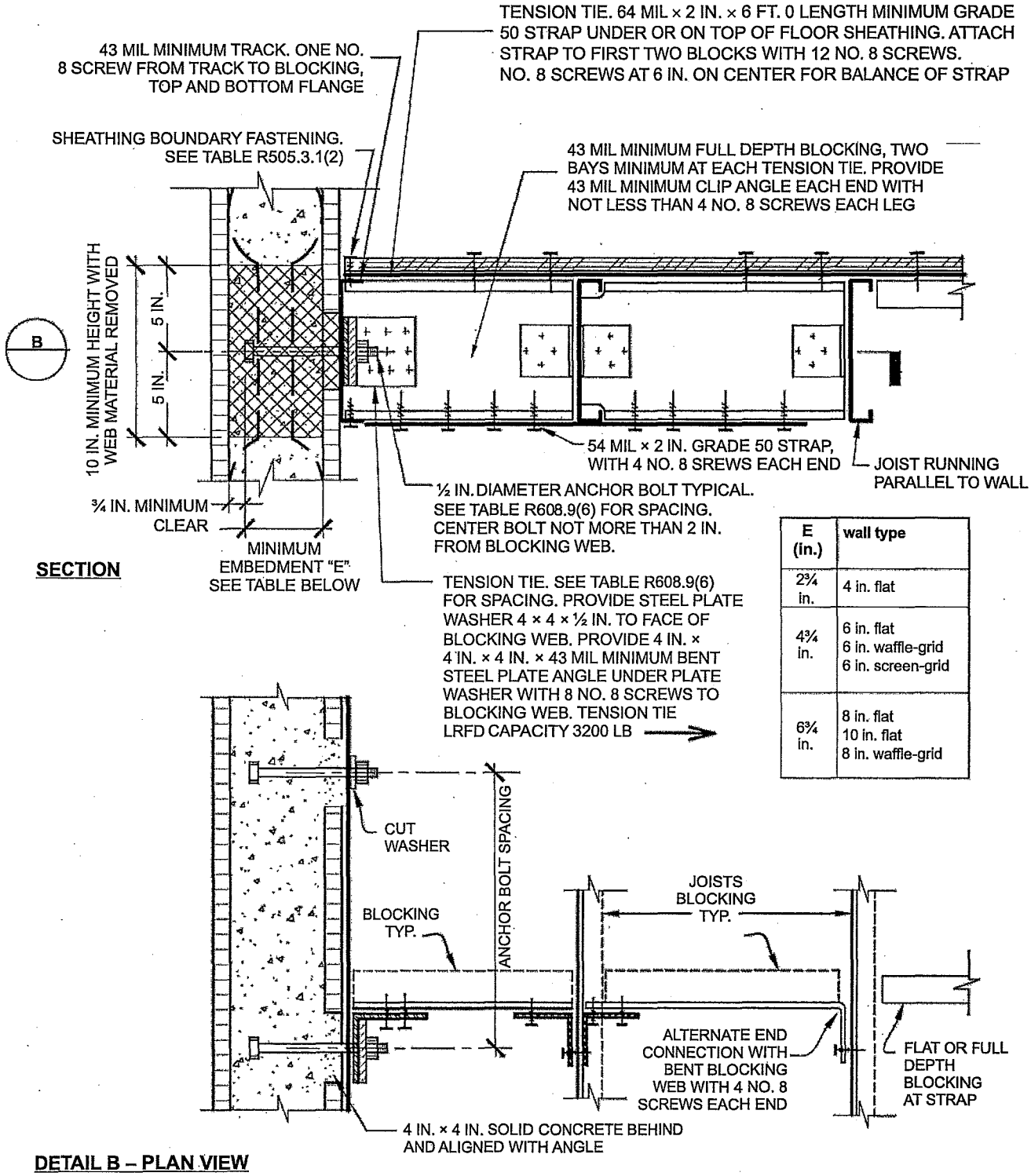

E (in.)	wall type
2¾ in.	4 in. flat
4¾ in.	6 in. flat 6 in. waffle-grid 6 in. screen-grid
6¾ in.	8 in. flat 10 in. flat 8 in. waffle-grid

For SI: 1 mil = 0.0254 mm, 1 inch = 25.4 mm, 1 pound-force = 4.448 N.

FIGURE R608.9(6)
COLD-FORMED STEEL FLOOR TO SIDE OF CONCRETE WALL, FRAMING PARALLEL

TABLE R608.9(6)
COLD-FORMED STEEL-FRAMED FLOOR TO SIDE OF CONCRETE WALL, FRAMING PARALLEL[a, b, c]

ANCHOR BOLT SPACING (inches)	TENSION TIE SPACING (inches)	BASIC WIND SPEED (mph) AND WIND EXPOSURE CATEGORY					
		115B	120B	130B	140B	150B	160B
				110C	119C	127C	136C
					110D	117D	125D
12	12						
12	24						
12	36						
12	48						
16	16						
16	32						
16	48						
19.2	19.2						
19.2	38.4						
24	24						
24	48						

For SI: 1 inch = 25.4 mm, 1 mile per hour = 0.447 m/s.

a. This table is for use with the detail in Figure R608.9(6). Use of this detail is permitted where a cell is not shaded.

b. Wall design per other provisions of Section R608 is required.

c. For wind design, minimum 4-inch-nominal wall is permitted in unshaded cells that do not contain a number.

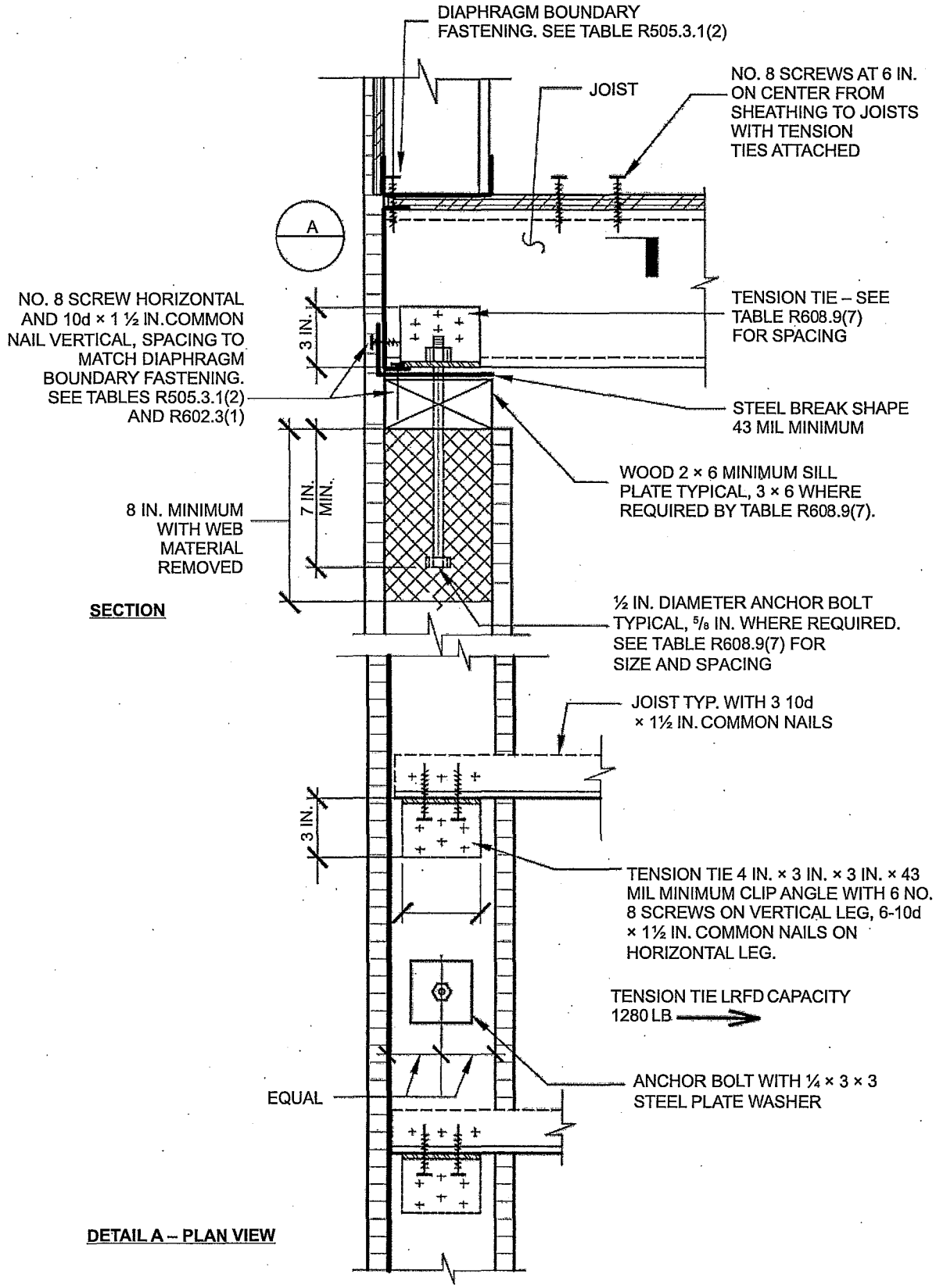

For SI: 1 mil = 0.0254 mm, 1 inch = 25.4 mm, 1 pound-force = 4.448 N.

FIGURE R608.9(7)
COLD-FORMED STEEL FLOOR TO TOP OF CONCRETE WALL, FRAMING PERPENDICULAR

2782

TABLE R608.9(7)
COLD-FORMED STEEL-FRAMED FLOOR TO TOP OF CONCRETE WALL, FRAMING PERPENDICULAR[a, b, c, d, e]

ANCHOR BOLT SPACING (inches)	TENSION TIE SPACING (inches)	BASIC WIND SPEED AND WIND EXPOSURE CATEGORY (mph)					
		115B	120B	130B	140B	150B	160B
				110C	119C	127C	136C
					110D	117D	125D
12	12						6
12	24					6	6
16	16					6	6A
16	32				6	6	6A
19.2	19.2				6A	6A	6B
19.2	38.4			6	6A	6A	6B
24	24			6A	6B	6B	6B

For SI: 1 inch = 25.4 mm, 1 mile per hour = 0.447 m/s.

a. This table is for use with the detail in Figure R608.9(7). Use of this detail is permitted where a cell is not shaded.

b. Wall design per other provisions of Section R608 is required.

c. For wind design, minimum 4-inch-nominal wall is permitted in unshaded cells that do not contain a number.

d. Number 6 indicates minimum permitted nominal wall thickness in inches necessary to develop required strength (capacity) of connection. As a minimum, this nominal thickness shall occur in the portion of the wall indicated by the cross-hatching in Figure R608.9(7). For the remainder of the wall, see Note b.

e. Letter "A" indicates that a minimum nominal 3 × 6 sill plate is required. Letter "B" indicates that a $^5/_8$-inch-diameter anchor bolt and a minimum nominal 3 × 6 sill plate are required.

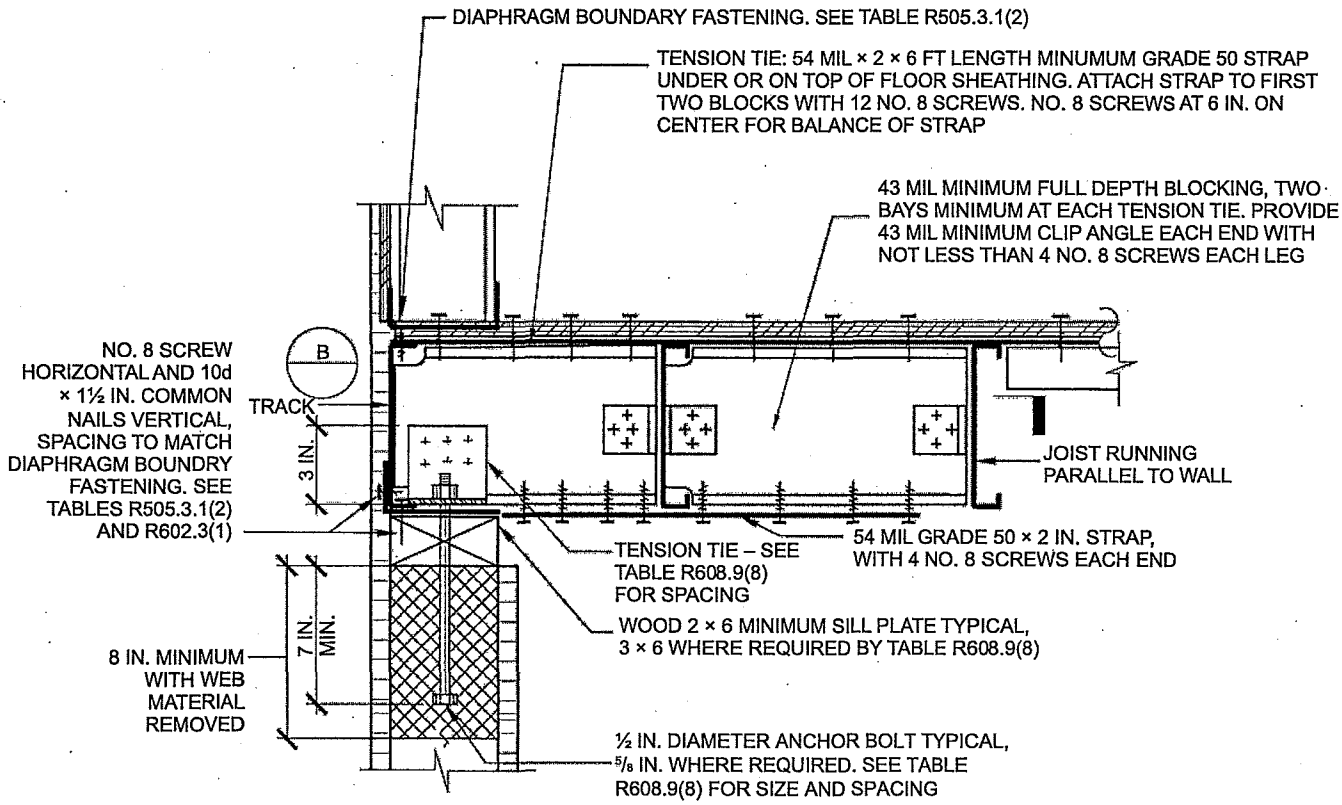

For SI: 1 mil = 0.0254 mm, 1 inch = 25.4 mm, 1 pound-force = 4.448 N.

FIGURE R608.9(8)
COLD-FORMED STEEL FLOOR TO TOP OF CONCRETE WALL, FRAMING PARALLEL

TABLE R608.9(8)
COLD-FORMED STEEL-FRAMED FLOOR TO TOP OF CONCRETE WALL, FRAMING PARALLEL[a, b, c, d, e]

ANCHOR BOLT SPACING (inches)	TENSION TIE SPACING (inches)	BASIC WIND SPEED AND WIND EXPOSURE CATEGORY (mph)					
		115B	120B	130B	140B	150B	160B
				110C	119C	127C	136C
					110D	117D	125D
12	12						6
12	24					6	6
16	16					6	6A
16	32				6	6	6A
19.2	19.2				6A	6A	6B
19.2	38.4			6	6A	6A	6B
24	24			6A	6B	6B	6B

For SI: 1 inch = 25.4 mm, 1 mile per hour = 0.447 m/s.

a. This table is for use with the detail in Figure R608.9(8). Use of this detail is permitted where a cell is not shaded.

b. Wall design per other provisions of Section R608 is required.

c. For wind design, minimum 4-inch-nominal wall is permitted in unshaded cells that do not contain a number.

d. Number 6 indicates minimum permitted nominal wall thickness in inches necessary to develop required strength (capacity) of connection. As a minimum, this nominal thickness shall occur in the portion of the wall indicated by the cross-hatching in Figure R608.9(8). For the remainder of the wall, see Note b.

e. Letter "A" indicates that a minimum nominal 3 × 6 sill plate is required. Letter "B" indicates that a $^5/_8$-inch-diameter anchor bolt and a minimum nominal 3 × 6 sill plate are required.

2785

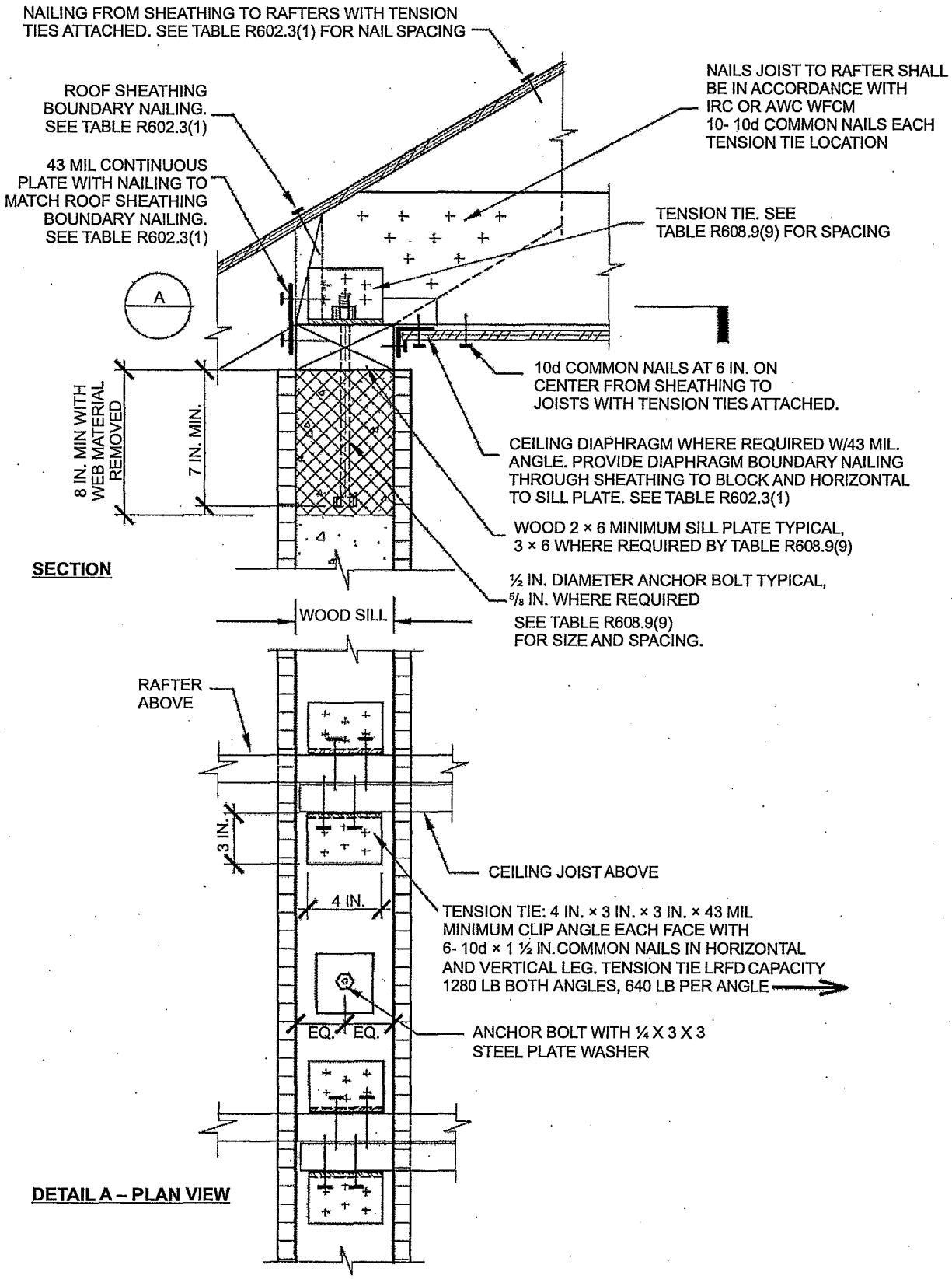

For SI: 1 mil = 0.0254 mm, 1 inch = 25.4 mm, 1 pound-force = 4.448 N.

FIGURE R608.9(9)
WOOD-FRAMED ROOF TO TOP OF CONCRETE WALL, FRAMING PERPENDICULAR

2786

TABLE R608.9(9)
WOOD-FRAMED ROOF TO TOP OF CONCRETE WALL, FRAMING PERPENDICULAR[a, b, c, d, e]

ANCHOR BOLT SPACING (inches)	TENSION TIE SPACING (inches)	BASIC WIND SPEED (mph) AND WIND EXPOSURE CATEGORY					
		115B	120B	130B	140B	150B	160B
				110C	119C	127C	136C
					110D	117D	125D
12	12						6
12	24						6
12	36					6	6
12	48				6	6	6
16	16					6	6
16	32					6	6
16	48				6	6	6
19.2	19.2					6	6
19.2	38.4				6	6	
24	24				6		
24	48			6	8B		

For SI: 1 inch = 25.4 mm, 1 mile per hour = 0.447 m/s.

a. This table is for use with the detail in Figure R608.9(9). Use of this detail is permitted where cell a is not shaded, prohibited where shaded.

b. Wall design per other provisions of Section R608 is required.

c. For wind design, minimum 4-inch-nominal wall is permitted in unshaded cells that do not contain a number.

d. Numbers 6 and 8 indicate minimum permitted nominal wall thickness in inches necessary to develop required strength (capacity) of connection. As a minimum, this nominal thickness shall occur in the portion of the wall indicated by the cross-hatching in Figure R608.9(9). For the remainder of the wall, see Note b.

e. Letter "B" indicates that a $^5/_8$-inch-diameter anchor bolt and a minimum nominal 3 × 6 sill plate are required.

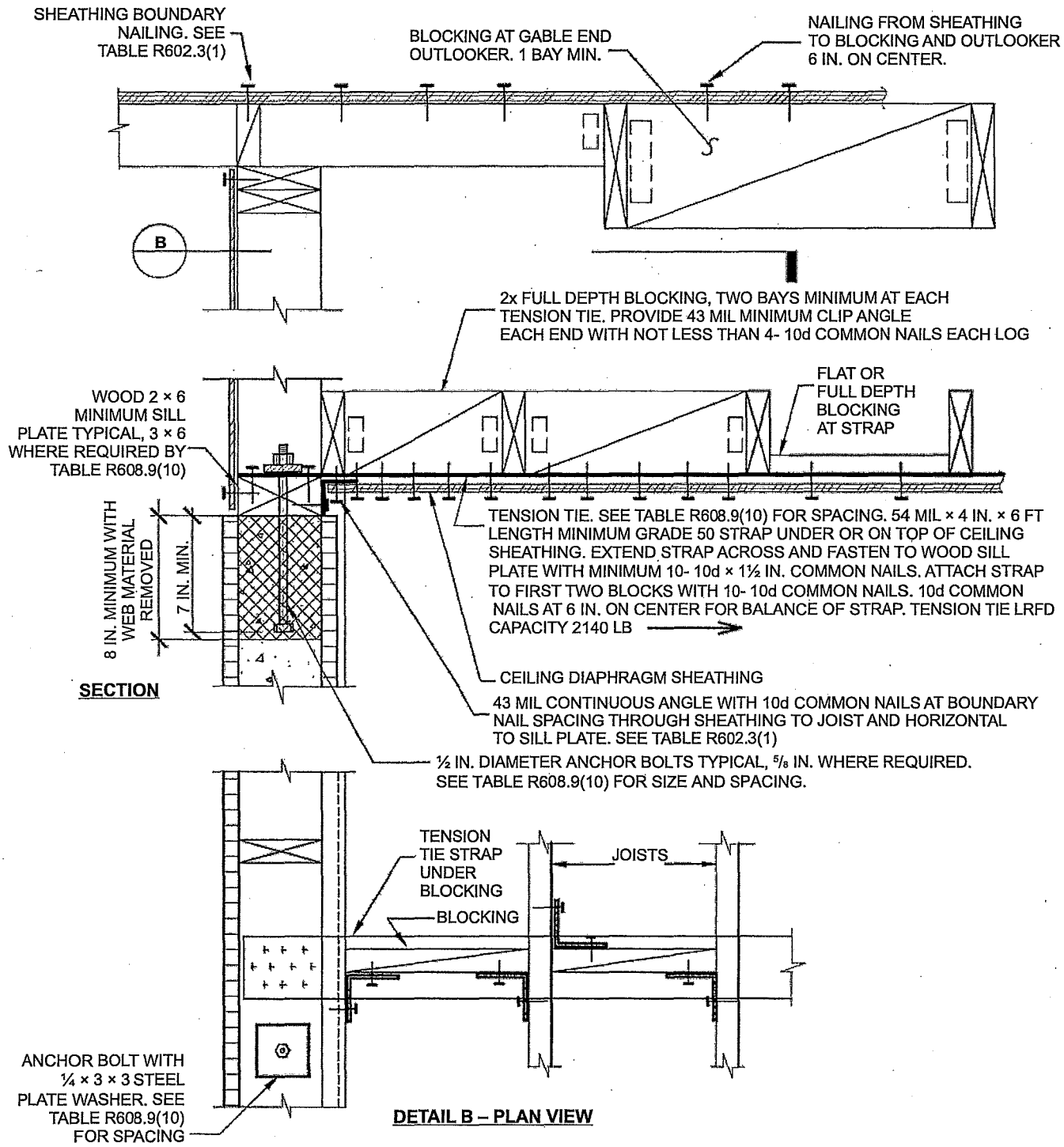

For SI: 1 mil = 0.0254 mm, 1 inch = 25.4 mm, 1 pound-force = 4.448 N.

FIGURE R608.9(10)
WOOD-FRAMED ROOF TO TOP OF CONCRETE WALL, FRAMING PARALLEL

TABLE R608.9(10)
WOOD-FRAMED ROOF TO TOP OF CONCRETE WALL, FRAMING PARALLEL[a, b, c, d, e]

ANCHOR BOLT SPACING (inches)	TENSION TIE SPACING (inches)	BASIC WIND SPEED (mph) AND WIND EXPOSURE CATEGORY					
		115B	120B	130B	140B	150B	160B
				110C	119C	127C	136C
					110D	117D	125D
12	12						6
12	24						6
12	36					6	6
12	48				6	6	6
16	16					6	6
16	32					6	6
16	48				6	6	6
19.2	19.2					6	6
19.2	38.4				6	6	
24	24				6		
24	48			6	8B		

For SI: 1 inch = 25.4 mm, 1 mile per hour = 0.447 m/s.

a. This table is for use with the detail in Figure R608.9(10). Use of this detail is permitted where a cell is not shaded, prohibited where shaded.

b. Wall design per other provisions of Section R608 is required.

c. For wind design, minimum 4-inch-nominal wall is permitted in cells that do not contain a number.

d. Numbers 6 and 8 indicate minimum permitted nominal wall thickness in inches necessary to develop required strength (capacity) of connection. As a minimum, this nominal thickness shall occur in the portion of the wall indicated by the cross-hatching in Figure R608.9(10). For the remainder of the wall, see Note b.

e. Letter "B" indicates that a $^5/_8$-inch-diameter anchor bolt and a minimum nominal 3 × 6 sill plate are required.

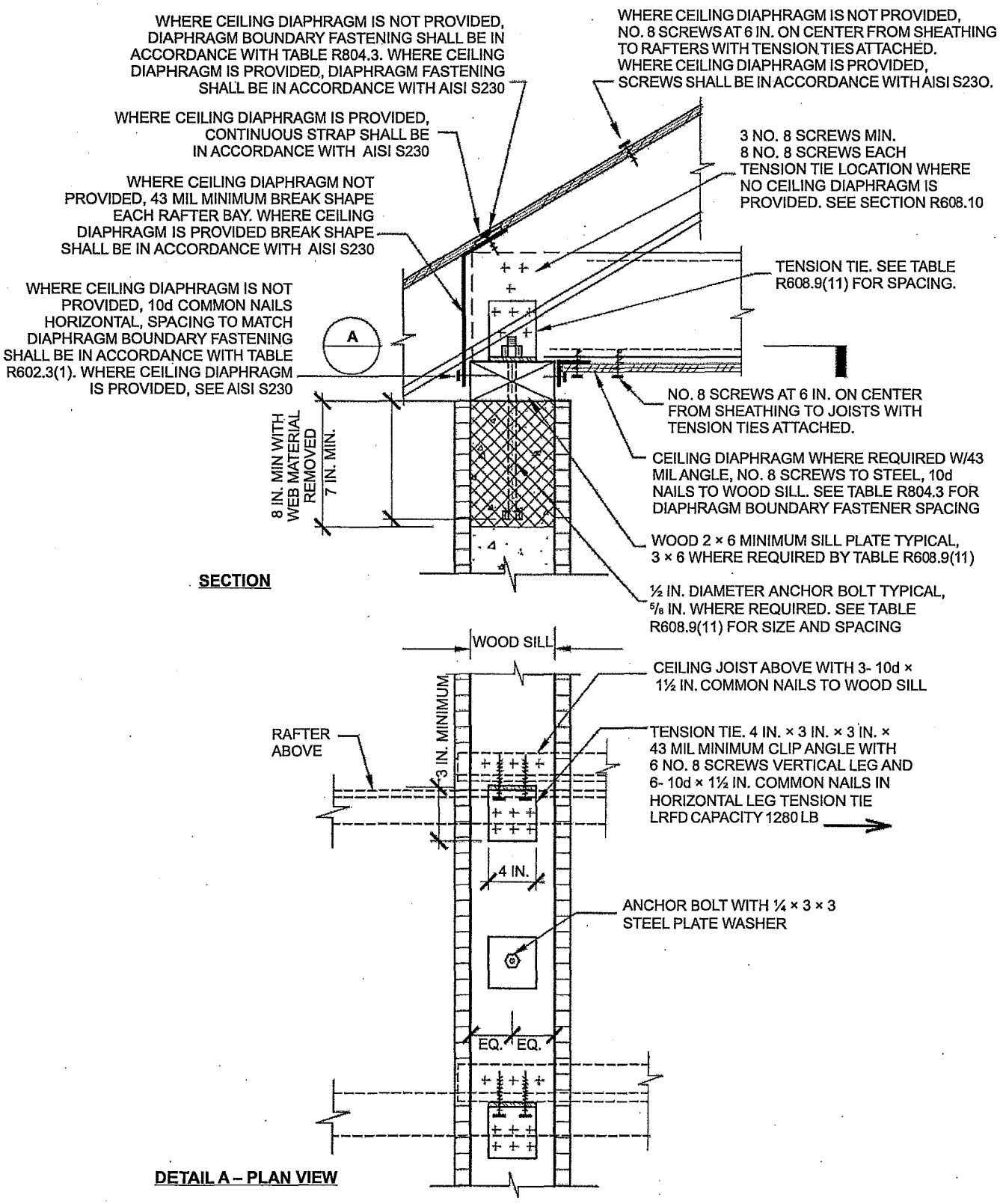

For SI: 1 mil = 0.0254 mm, 1 inch = 25.4 mm, 1 foot = 304.8 mm, 1 pound-force = 4.448 N.

FIGURE R608.9(11)
COLD-FORMED STEEL ROOF TO TOP OF CONCRETE WALL, FRAMING PERPENDICULAR

TABLE R608.9(11)
WOOD-FRAMED ROOF TO TOP OF CONCRETE WALL, FRAMING PERPENDICULAR[a, b, c, d, e]

ANCHOR BOLT SPACING (inches)	TENSION TIE SPACING (inches)	BASIC WIND SPEED (mph) AND WIND EXPOSURE CATEGORY					
		115B	120B	130B	140B	150B	160B
				110C	119C	127C	136C
					110D	117D	125D
12	12						6
12	24						6
16	16					6	6
16	32					6	6
19.2	19.2					6	6
19.2	38.4				6	6	6
24	24				6	6A	6B

For SI: 1 inch = 25.4 mm, 1 mile per hour = 0.447 m/s.

a. This table is for use with the detail in Figure R608.9(11). Use of this detail is permitted where a cell is not shaded.

b. Wall design per other provisions of Section R608 is required.

c. For wind design, minimum 4-inch-nominal wall is permitted in unshaded cells that do not contain a number.

d. Number 6 indicates minimum permitted nominal wall thickness in inches necessary to develop required strength (capacity) of connection. As a minimum, this nominal thickness shall occur in the portion of the wall indicated by the cross-hatching in Figure R608.9(11). For the remainder of the wall, see Note b.

e. Letter "A" indicates that a minimum nominal 3 × 6 sill plate is required. Letter "B" indicates that a $^5/_8$-inch-diameter anchor bolt and a minimum nominal 3 × 6 sill plate are required.

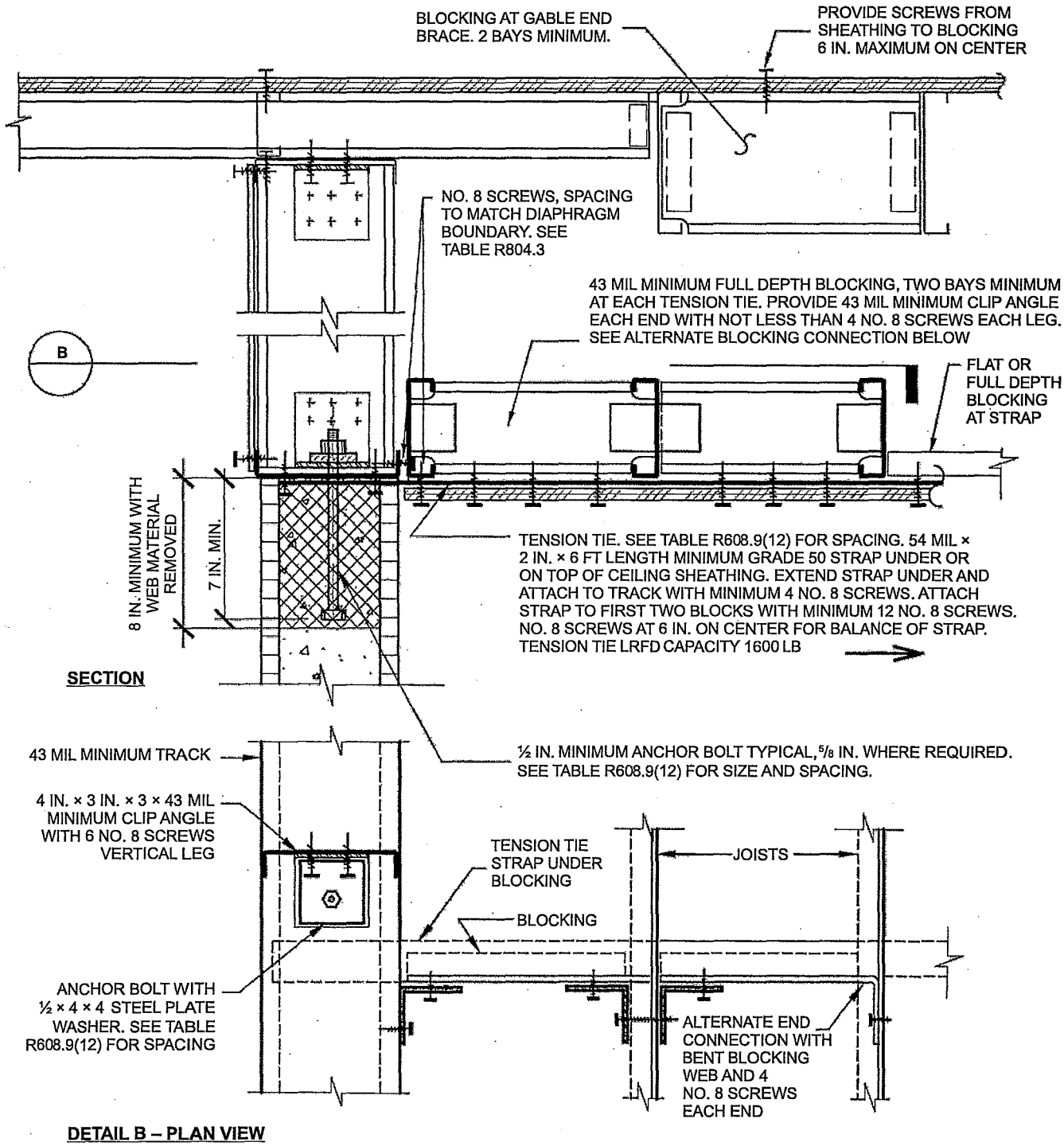

For SI: 1 mil = 0.0254 mm, 1 inch = 25.4 mm, 1 pound-force = 4.448 N.

FIGURE R608.9(12)
COLD-FORMED STEEL ROOF TO TOP OF CONCRETE WALL, FRAMING PARALLEL

TABLE R608.9(12)
COLD-FORMED STEEL ROOF TO TOP OF CONCRETE WALL, FRAMING PARALLEL[a, b, c, d, e]

ANCHOR BOLT SPACING (inches)	TENSION TIE SPACING (inches)	BASIC WIND SPEED (mph) AND WIND EXPOSURE CATEGORY					
		115B	120B	130B	140B	150B	160B
				110C	119C	127C	136C
					110D	117D	125D
12	12						6
12	24						6
16	16					6	6
16	32					6	6
19.2	19.2					6	6
19.2	38.4				6	6	6
24	24				6	6	6B

For SI: 1 inch = 25.4 mm, 1 mile per hour = 0.447 m/s.

a. This table is for use with the detail in Figure R608.9(12). Use of this detail is permitted where a cell is not shaded.

b. Wall design per other provisions of Section R608 is required.

c. For wind design, minimum 4-inch-nominal wall is permitted in cells that do not contain a number.

d. Number 6 indicates minimum permitted nominal wall thickness in inches necessary to develop required strength (capacity) of connection. As a minimum, this nominal thickness shall occur in the portion of the wall indicated by the cross-hatching in Figure R608.9(12). For the remainder of the wall, see Note b.

e. Letter "B" indicates that a $^5/_8$-inch-diameter anchor bolt is required.

SECTION R609
EXTERIOR WINDOWS AND DOORS

R609.1 General. This section prescribes performance and construction requirements for exterior windows and doors installed in walls. Windows and doors shall be installed and flashed in accordance with the fenestration manufacturer's written instructions. Window and door openings shall be flashed in accordance with Section R703.4. Written installation instructions shall be provided by the fenestration manufacturer for each window or door.

R609.2 Performance. Exterior windows and doors shall be designed to resist the design wind loads specified in Table R301.2(2) adjusted for height and exposure in accordance with Table R301.2(3) or determined in accordance with ASCE 7 using the allowable stress design load combinations of ASCE 7. Design wind loads for exterior glazing not part of a labeled assembly shall be permitted to be determined in accordance with Chapter 24 of the *International Building Code*.

R609.3 Testing and labeling. Exterior windows and sliding doors shall be tested by an *approved* independent laboratory, and bear a *label* identifying manufacturer, performance characteristics and *approved* inspection agency to indicate compliance with AAMA/WDMA/CSA 101/I.S.2/A440. Exterior side-hinged doors shall be tested and *labeled* as conforming to AAMA/WDMA/CSA 101/I.S.2/A440 or AMD 100, or comply with Section R609.5.

Exception: Decorative glazed openings.

R609.3.1 Comparative analysis. Structural wind load design pressures for window and door units different than the size tested in accordance with Section R609.3 shall be permitted to be different than the design value of the tested unit where determined in accordance with one of the following comparative analysis methods:

1. Structural wind load design pressures for window and door units smaller than the size tested in accordance with Section R609.3 shall be permitted to be higher than the design value of the tested unit provided such higher pressures are determined by accepted engineering analysis. Components of the smaller unit shall be the same as those of the tested unit. Where such calculated design pressures are used, they shall be validated by an additional test of the window or door unit having the highest allowable design pressure.
2. In accordance with WDMA I.S.11.

R609.4 Garage doors. Garage doors shall be tested in accordance with either ASTM E 330 or ANSI/DASMA 108, and shall meet the acceptance criteria of ANSI/DASMA 108.

R609.5 Other exterior window and door assemblies. Exterior windows and door assemblies not included within the scope of Section R609.3 or R609.4 shall be tested in accordance with ASTM E 330. Glass in assemblies covered by this exception shall comply with Section R308.5.

R609.6 Wind-borne debris protection. Protection of exterior windows and glass doors in buildings located in wind-borne debris regions shall be in accordance with Section R301.2.1.2.

R609.6.1 Fenestration testing and labeling. Fenestration shall be tested by an *approved* independent laboratory, listed by an *approved* entity, and bear a *label* identifying manufacturer, performance characteristics, and *approved* inspection agency to indicate compliance with the requirements of the following specification(s):

1. ASTM E 1886 and ASTM E 1996; or
2. AAMA 506.

R609.7 Anchorage methods. The methods cited in this section apply only to anchorage of window and glass door assemblies to the main force-resisting system.

R609.7.1 Anchoring requirements. Window and glass door assemblies shall be anchored in accordance with the published manufacturer's recommendations to achieve the design pressure specified. Substitute anchoring systems used for substrates not specified by the fenestration manufacturer shall provide equal or greater anchoring performance as demonstrated by accepted engineering practice.

R609.7.2 Anchorage details. Products shall be anchored in accordance with the minimum requirements illustrated in Figures R609.7.2(1), R609.7.2(2), R609.7.2(3), R609.7.2(4), R609.7.2(5), R609.7.2(6), R609.7.2(7) and R609.7.2(8).

R609.7.2.1 Masonry, concrete or other structural substrate. Where the wood shim or buck thickness is less than $1^1/_2$ inches (38 mm), window and glass door assemblies shall be anchored through the jamb, or by jamb clip and anchors shall be embedded directly into the masonry, concrete or other substantial substrate material. Anchors shall adequately transfer load from the window or door frame into the rough opening substrate [see Figures R609.7.2(1) and R6097.2(2)].

Where the wood shim or buck thickness is $1^1/_2$ inches (38 mm) or more, the buck is securely fastened to the masonry, concrete or other substantial substrate, and the buck extends beyond the interior face of the window or door frame, window and glass door assemblies shall be anchored through the jamb, or by jamb clip, or through the flange to the secured wood buck. Anchors shall be embedded into the secured wood buck to adequately transfer load from the window or door frame assembly [see Figures R609.7.2(3), R6097.2(4) and R609.7.2(5)].

R609.7.2.2 Wood or other approved framing material. Where the framing material is wood or other *approved* framing material, window and glass door assemblies shall be anchored through the frame, or by frame clip, or through the flange. Anchors shall be embedded into the frame construction to adequately transfer load [see Figures R609.7.2(6), R609.7.2(7) and R609.7.2(8)].

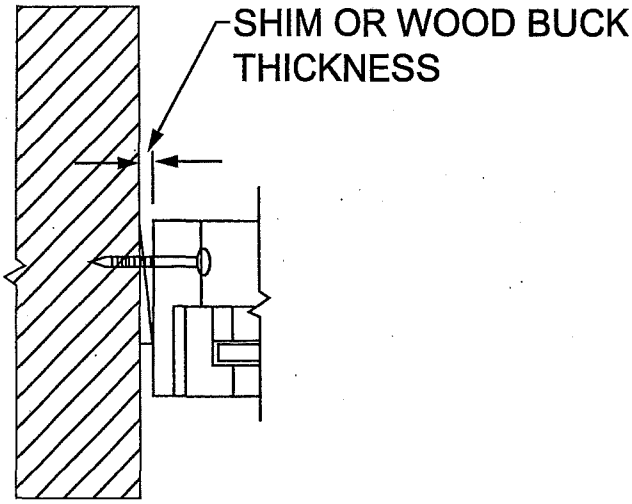

FIGURE R609.7.2(1)
THROUGH THE FRAME

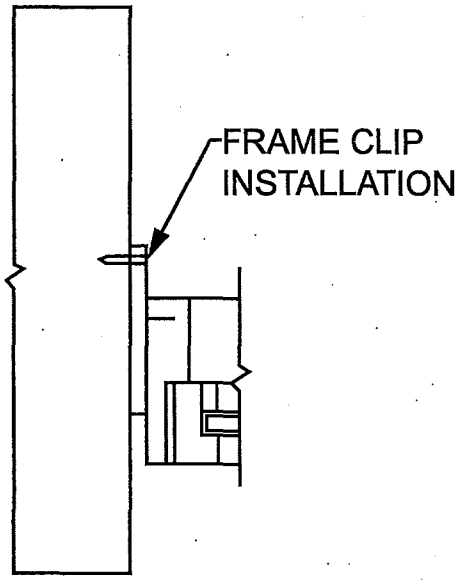

FIGURE R609.7.2(2)
FRAME CLIP

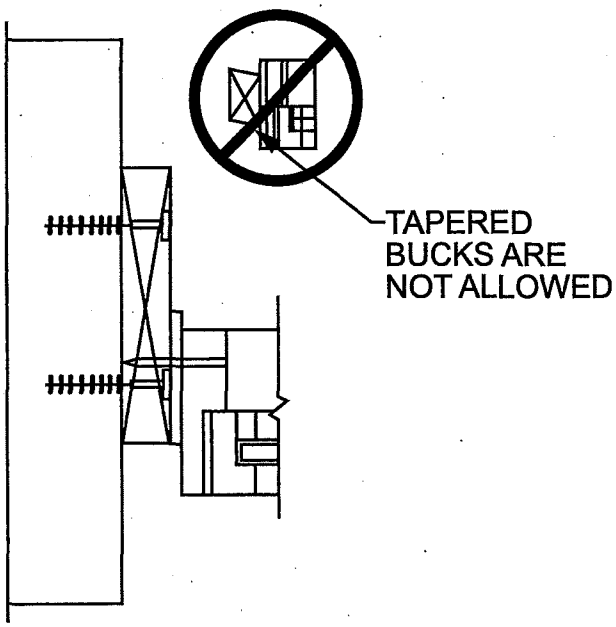

FIGURE R609.7.2(3)
THROUGH THE FRAME

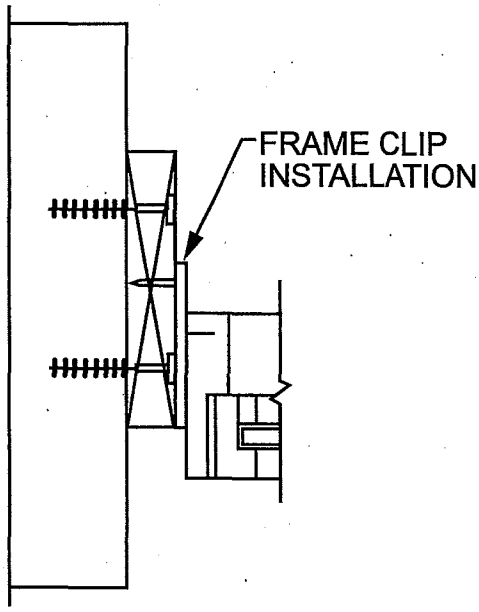

FIGURE R609.7.2(4)
FRAME CLIP

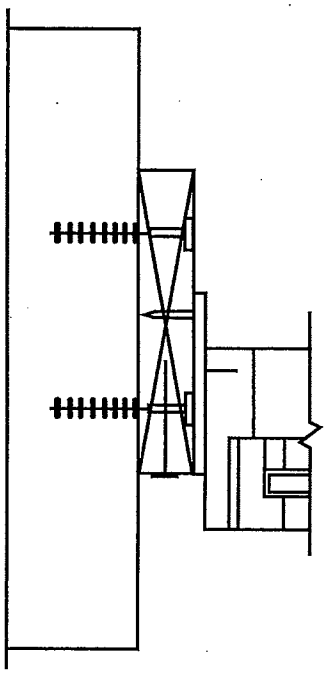

FIGURE R609.7.2(5)
THROUGH THE FLANGE

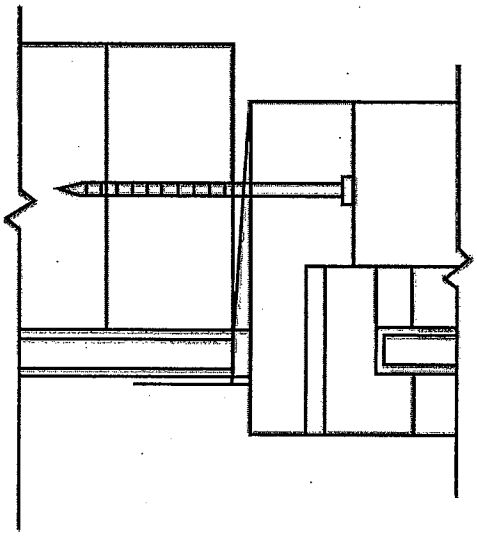

FIGURE R609.7.2(6)
THROUGH THE FLANGE

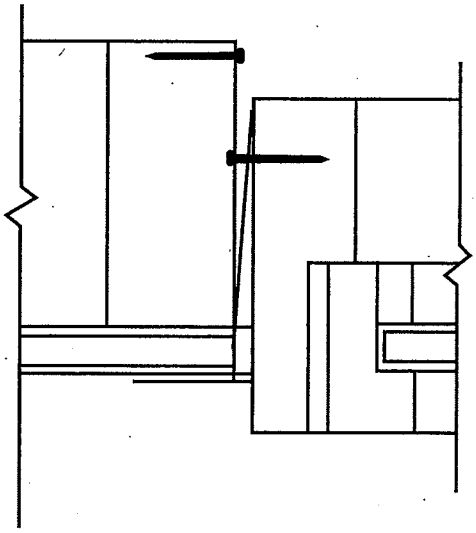

FIGURE R609.7.2(7)
FRAME CLIP

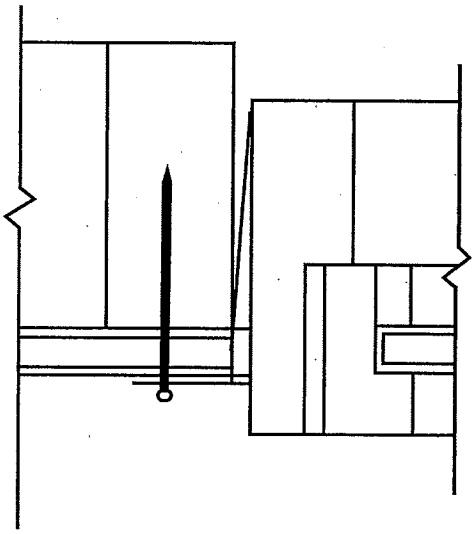

FIGURE R609.7.2(8)
THROUGH THE FLANGE

R609.8 Mullions. Mullions shall be tested by an *approved* testing laboratory in accordance with AAMA 450, or be engineered in accordance with accepted engineering practice. Mullions tested as stand-alone units or qualified by engineering shall use performance criteria cited in Sections R609.8.1, R609.8.2 and R609.8.3. Mullions qualified by an actual test of an entire assembly shall comply with Sections R609.8.1 and R609.8.3.

R609.8.1 Load transfer. Mullions shall be designed to transfer the design pressure loads applied by the window and door assemblies to the rough opening substrate.

R609.8.2 Deflection. Mullions shall be capable of resisting the design pressure loads applied by the window and door assemblies to be supported without deflecting more than $L/175$, where L is the span of the mullion in inches.

R609.8.3 Structural safety factor. Mullions shall be capable of resisting a load of 1.5 times the design pressure loads applied by the window and door assemblies to be supported without exceeding the appropriate material stress levels. If tested by an *approved* laboratory, the 1.5 times the design pressure load shall be sustained for 10 seconds, and the permanent deformation shall not exceed 0.4 percent of the mullion span after the 1.5 times design pressure load is removed.

SECTION R610
STRUCTURAL INSULATED PANEL WALL CONSTRUCTION

R610.1 General. Structural insulated panel (SIP) walls shall be designed in accordance with the provisions of this section. Where the provisions of this section are used to design structural insulated panel walls, project drawings, typical details and specifications are not required to bear the seal of the architect or engineer responsible for design, unless otherwise required by the state law of the *jurisdiction* having authority.

R610.2 Applicability limits. The provisions of this section shall control the construction of exterior structural insulated panel walls and interior load-bearing structural insulated panel walls for buildings not greater than 60 feet (18 288 mm) in length perpendicular to the joist or truss span, not greater than 40 feet (12 192 mm) in width parallel to the joist or truss span and not greater than two stories in height with each wall not greater than 10 feet (3048 mm) high. Exterior walls installed in accordance with the provisions of this section shall be considered as load-bearing walls. Structural insulated panel walls constructed in accordance with the provisions of this section shall be limited to sites where the ultimate design wind speed (V_{ult}) is not greater than 155 miles per hour (69 m/s), Exposure B or 140 miles per hour (63 m/s) Exposure C, the ground snow load is not greater than 70 pounds per foot (3.35 kPa), and the seismic design category is A, B or C.

R610.3 Materials. SIPs shall comply with the following criteria:

R610.3.1 Core. The core material shall be composed of foam plastic insulation meeting one of the following requirements:

1. ASTM C 578 and have a minimum density of 0.90 pounds per cubic feet (14.4 kg/m^3).
2. Polyurethane meeting the physical properties shown in Table R610.3.1.
3. An *approved* alternative.

All cores shall meet the requirements of Section R316.

R610.3.2 Facing. Facing materials for SIPs shall be wood structural panels conforming to DOC PS 1 or DOC PS 2, each having a minimum nominal thickness of $^7/_{16}$ inch (11 mm) and shall meet the additional minimum properties specified in Table R610.3.2. Facing shall be identified by a grade mark or certificate of inspection issued by an *approved* agency.

R610.3.3 Adhesive. Adhesives used to structurally laminate the foam plastic insulation core material to the structural wood facers shall conform to ASTM D 2559 or *approved* alternative specifically intended for use as an adhesive used in the lamination of structural insulated panels. Each container of adhesive shall bear a *label* with the adhesive manufacturer's name, adhesive name and type and the name of the quality assurance agency.

TABLE R610.3.1
MINIMUM PROPERTIES FOR POLYURETHANE INSULATION USED AS SIPS CORE

PHYSICAL PROPERTY	POLYURETHANE
Density, core nominal (ASTM D 1622)	2.2 lb/ft^3
Compressive resistance at yield or 10% deformation, whichever occurs first (ASTM D 1621)	19 psi (perpendicular to rise)
Flexural strength, min. (ASTM C 203)	30 psi
Tensile strength, min. (ASTM D 1623)	35 psi
Shear strength, min. (ASTM C 273)	25 psi
Substrate adhesion, min. (ASTM D 1623)	22 psi
Water vapor permeance of 1.00-in. thickness, max. (ASTM E 96)	2.3 perm
Water absorption by total immersion, max. (ASTM C 272)	4.3% (volume)
Dimensional stability (change in dimensions), max. [ASTM D 2126 (7 days at 158°F/100% humidity and 7 days at -20°F)]	2%

For SI: 1 pound per cubic foot = 16.02 kg/m^3, 1 pound per square inch = 6.895 kPa, °C = [(°F) - 32]1.8.

TABLE R610.3.2
MINIMUM PROPERTIES[a] FOR ORIENTED STRAND BOARD FACER MATERIAL IN SIP WALLS

THICKNESS (in.)	PRODUCT	FLATWISE STIFFNESS[b] ($lbf\text{-}in^2/ft$)		FLATWISE STRENGTH[c] (lbf-in/ft)		TENSION[c] (lbf/ft)		DENSITY[d] (pcf)
		Along	Across	Along	Across	Along	Across	
$^7/_{16}$	Sheathing	55,600	16,500	1,040	460	7,450	5,800	34

For SI: 1 inch = 25.4 mm, 1 $lbf\text{-}in^2/ft = 9.415 \times 10^{-6}$ kPa/m, 1 lbf-in/ft = 3.707×10^{-4} kN/m, 1 lbf/ft = 0.0146 N/mm, 1 pound per cubic foot = 16.018 kg/m^3.

a. Values listed in Table R610.3.2 are qualification test values and are not to be used for design purposes.

b. Mean test value shall be in accordance with Section 7.6 of DOC PS 2.

c. Characteristic test value (5th percent with 75% confidence).

d. Density shall be based on oven-dry weight and oven-dry volume.

R610.3.4 Lumber. The minimum lumber framing material used for SIPs prescribed in this document is NLGA graded No. 2 Spruce-pine-fir. Substitution of other wood species/grades that meet or exceed the mechanical properties and specific gravity of No. 2 Spruce-pine-fir shall be permitted.

R610.3.5 SIP screws. Screws used for the erection of SIPs as specified in Section R610.5 shall be fabricated from steel, shall be provided by the SIP manufacturer and shall be sized to penetrate the wood member to which the assembly is being attached by not less than 1 inch (25 mm). The screws shall be corrosion resistant and have a minimum shank diameter of 0.188 inch (4.7 mm) and a minimum head diameter of 0.620 inch (15.5 mm).

R610.3.6 Nails. Nails specified in Section R610 shall be common or galvanized box unless otherwise stated.

R610.4 SIP wall panels. SIPs shall comply with Figure R610.4 and shall have minimum panel thickness in accordance with Tables R610.5(1) and R610.5(2) for above-grade walls. SIPs shall be identified by grade mark or certificate of inspection issued by an *approved* agency.

R610.4.1 Labeling. Panels shall be identified by grade mark or certificate of inspection issued by an *approved* agency. Each (SIP) shall bear a stamp or *label* with the following minimum information:

1. Manufacturer name/logo.
2. Identification of the assembly.
3. Quality assurance agency.

R610.5 Wall construction. Exterior walls of SIP construction shall be designed and constructed in accordance with the provisions of this section and Tables R610.5(1) and R610.5(2) and Figures R610.5(1) through R610.5(5). SIP walls shall be fastened to other wood building components in accordance with Tables R602.3(1) through R602.3(4).

Framing shall be attached in accordance with Table R602.3(1) unless otherwise provided for in Section R610.

R610.5.1 Top plate connection. SIP walls shall be capped with a double top plate installed to provide overlapping at corner, intersections and splines in accordance with Figure R610.5.1. The double top plates shall be made up of a single 2 by top plate having a width equal to the width of the panel core, and shall be recessed into the SIP below. Over this top plate a cap plate shall be placed. The cap plate width shall match the SIP thickness and overlap the facers on both sides of the panel. End joints in top plates shall be offset not less than 24 inches (610 mm).

R610.5.2 Bottom (sole) plate connection. SIP walls shall have full bearing on a sole plate having a width equal to the nominal width of the foam core. Where SIP walls are supported directly on continuous foundations, the wall wood sill plate shall be anchored to the foundation in accordance with Figure R610.5.2 and Section R403.1.

R610.5.3 Wall bracing. SIP walls shall be braced in accordance with Section R602.10. SIP walls shall be considered continuous wood structural panel sheathing for purposes of computing required bracing. SIP walls shall meet the requirements of Section R602.10.4.2 except that SIP corners shall be fabricated as shown in Figure R610.9. Where SIP walls are used for wall bracing, the SIP bottom plate shall be attached to wood framing below in accordance with Table R602.3(1).

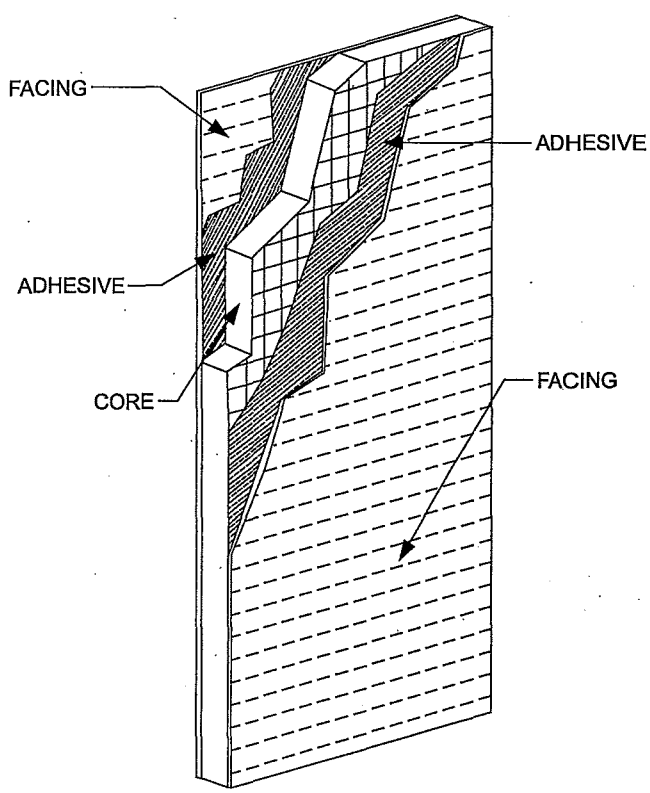

FIGURE R610.4
SIP WALL PANEL

TABLE R610.5(1)
MINIMUM THICKNESS FOR SIP WALL SUPPORTING SIP OR LIGHT-FRAME ROOF ONLY (inches)[a]

ULTIMATE DESIGN WIND SPEED V_{ult} (mph)		SNOW LOAD (psf)	BUILDING WIDTH (ft)														
			24			28			32			36			40		
Exp. B	Exp. C		Wall Height (feet)			Wall Height (feet)			Wall Height (feet)			Wall Height (feet)			Wall Height (feet)		
			8	9	10	8	9	10	8	9	10	8	9	10	8	9	10
110	—	20	4.5	4.5	4.5	4.5	4.5	4.5	4.5	4.5	4.5	4.5	4.5	4.5	4.5	4.5	4.5
		30	4.5	4.5	4.5	4.5	4.5	4.5	4.5	4.5	4.5	4.5	4.5	4.5	4.5	4.5	4.5
		50	4.5	4.5	4.5	4.5	4.5	4.5	4.5	4.5	4.5	4.5	4.5	4.5	4.5	4.5	4.5
		70	4.5	4.5	4.5	4.5	4.5	4.5	4.5	4.5	4.5	4.5	4.5	6.5	4.5	4.5	6.5
115	—	20	4.5	4.5	4.5	4.5	4.5	4.5	4.5	4.5	4.5	4.5	4.5	4.5	4.5	4.5	4.5
		30	4.5	4.5	4.5	4.5	4.5	4.5	4.5	4.5	4.5	4.5	4.5	4.5	4.5	4.5	4.5
		50	4.5	4.5	4.5	4.5	4.5	4.5	4.5	4.5	4.5	4.5	4.5	4.5	4.5	4.5	6.5
		70	4.5	4.5	4.5	4.5	4.5	4.5	4.5	4.5	6.5	4.5	4.5	DR	4.5	4.5	DR
130	110	20	4.5	4.5	6.5	4.5	4.5	6.5	4.5	4.5	6.5	4.5	4.5	DR	4.5	4.5	DR
		30	4.5	4.5	6.5	4.5	4.5	6.5	4.5	4.5	DR	4.5	4.5	DR	4.5	4.5	DR
		50	4.5	4.5	DR	4.5	4.5	DR	4.5	4.5	DR	4.5	6.5	DR	4.5	DR	DR
		70	4.5	4.5	DR	4.5	DR	DR	4.5	DR	DR	4.5	DR	DR	DR	DR	DR
140	120	20	4.5	6.5	DR	4.5	6.5	DR	4.5	DR	DR	4.5	DR	DR	4.5	DR	DR
		30	4.5	6.5	DR	4.5	DR	DR	4.5	DR	DR	4.5	DR	DR	4.5	DR	DR
		50	4.5	DR	DR	4.5	DR	DR	DR	DR	DR	DR	DR	DR	DR	DR	DR
		70	4.5	DR	DR	DR	DR	DR	DR	DR	DR	DR	DR	DR	DR	DR	DR

For SI: 1 inch = 25.4 mm, 1 foot = 304.8 mm, 1 pound per square foot = 0.0479 kPa, 1 mile per hour = 0.447 m/s.

DR = design required.

a. Design assumptions:

Maximum deflection criteria: $L/240$.

Maximum roof dead load: 10 psf.

Maximum roof live load: 70 psf.

Maximum ceiling dead load: 5 psf.

Maximum ceiling live load: 20 psf.

Wind loads based on Table R301.2 (2).

Strength axis of facing material applied vertically.

2799

TABLE R610.5(2)
MINIMUM THICKNESS FOR SIP WALL SUPPORTING SIP OR LIGHT-FRAME ONE STORY AND ROOF ONLY (inches)[a]

ULTIMATE DESIGN WIND SPEED V_{ult}(mph)		SNOW LOAD (psf)	BUILDING WIDTH (ft)														
			24			28			32			36			40		
Exp. B	Exp. C		Wall Height (feet)			Wall Height (feet)			Wall Height (feet)			Wall Height (feet)			Wall Height (feet)		
			8	9	10	8	9	10	8	9	10	8	9	10	8	9	10
110	—	20	4.5	4.5	4.5	4.5	4.5	4.5	4.5	4.5	6.5	4.5	4.5	DR	4.5	4.5	DR
		30	4.5	4.5	4.5	4.5	4.5	4.5	4.5	4.5	6.5	4.5	4.5	DR	4.5	6.5	DR
		50	4.5	4.5	4.5	4.5	4.5	6.5	4.5	4.5	DR	4.5	DR	DR	DR	DR	DR
		70	4.5	4.5	6.5	4.5	4.5	DR	4.5	DR	DR	DR	DR	DR	DR	DR	DR
115	—	20	4.5	4.5	4.5	4.5	4.5	6.5	4.5	4.5	DR	4.5	4.5	DR	4.5	DR	DR
		30	4.5	4.5	4.5	4.5	4.5	6.5	4.5	4.5	DR	4.5	6.5	DR	4.5	DR	DR
		50	4.5	4.5	6.5	4.5	4.5	DR	4.5	DR	DR	4.5	DR	DR	DR	DR	DR
		70	4.5	4.5	DR	4.5	DR	DR	DR	DR	DR	DR	DR	DR	DR	DR	DR
120	—	20	4.5	4.5	6.5	4.5	4.5	DR	4.5	4.5	DR	4.5	DR	DR	4.5	DR	DR
		30	4.5	4.5	DR	4.5	4.5	DR	4.5	6.5	DR	4.5	DR	DR	DR	DR	DR
		50	4.5	4.5	DR	4.5	DR	DR	4.5	DR	DR	DR	DR	DR	DR	DR	DR
		70	4.5	DR	DR	4.5	DR	DR	DR	DR	DR	DR	DR	DR	DR	DR	DR
130	110	20	4.5	6.5	DR	4.5	DR	DR	4.5	DR	DR	DR	DR	DR	DR	DR	DR
		30	4.5	DR	DR	4.5	DR	DR	DR	DR	DR	DR	DR	DR	DR	DR	DR
		50	4.5	DR	DR	DR	DR	DR	DR	DR	DR	DR	DR	DR	DR	DR	DR
		70	DR	DR	DR	DR	DR	DR	DR	DR	DR	DR	DR	DR	DR	DR	DR

For SI: 1 Inch = 25.4 mm, 1 foot = 304.8 mm, 1 pound per square foot = 0.0479 kPa, 1 mile per hour = 0.447 m/s.
DR = Design required.

a. Design assumptions:
- Maximum deflection criteria: $L/240$.
- Maximum roof dead load: 10 psf.
- Maximum roof live load: 70 psf.
- Maximum ceiling dead load: 5 psf.
- Maximum ceiling live load: 20 psf.
- Maximum second-floor dead load: 10 psf.
- Maximum second-floor live load: 30 psf.
- Maximum second-floor dead load from walls: 10 psf.
- Maximum first-floor dead load: 10 psf.
- Maximum first-floor live load: 40 psf.
- Wind loads based on Table R301.2 (2).
- Strength axis of facing material applied vertically.

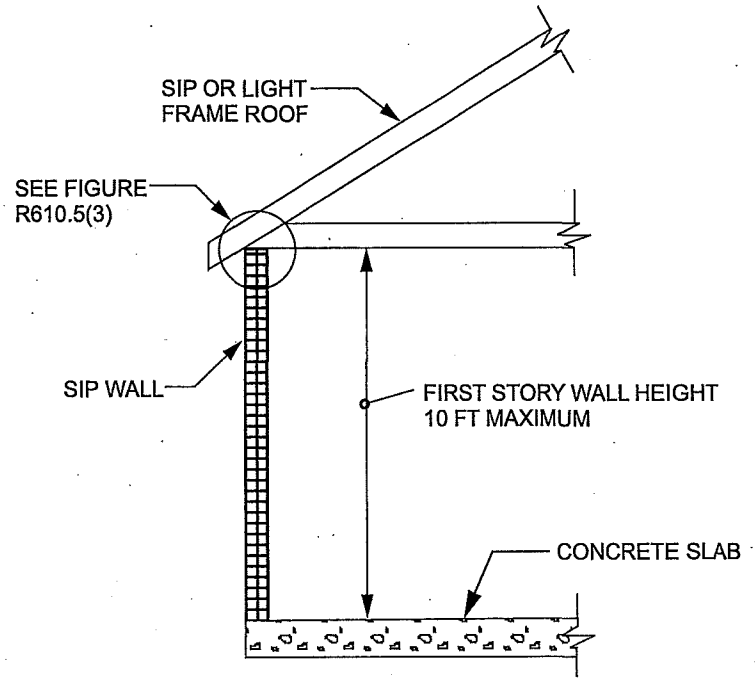

For SI: 1 foot = 304.8 mm.

FIGURE R610.5(1)
MAXIMUM ALLOWABLE HEIGHT OF SIP WALLS

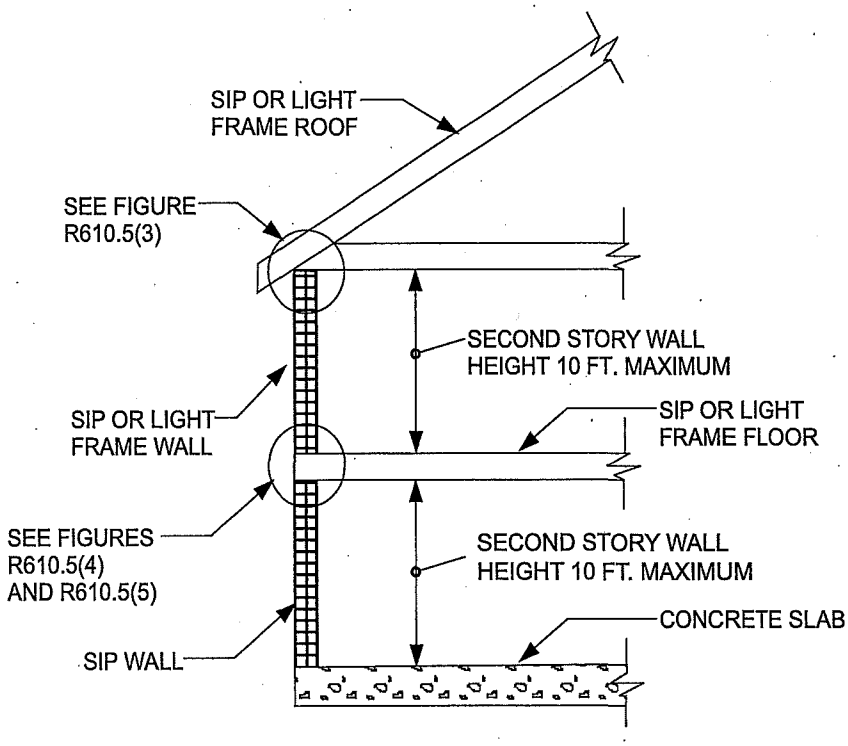

For SI: 1 foot = 304.8 mm.

FIGURE R610.5(2)
MAXIMUM ALLOWABLE HEIGHT OF SIP WALLS

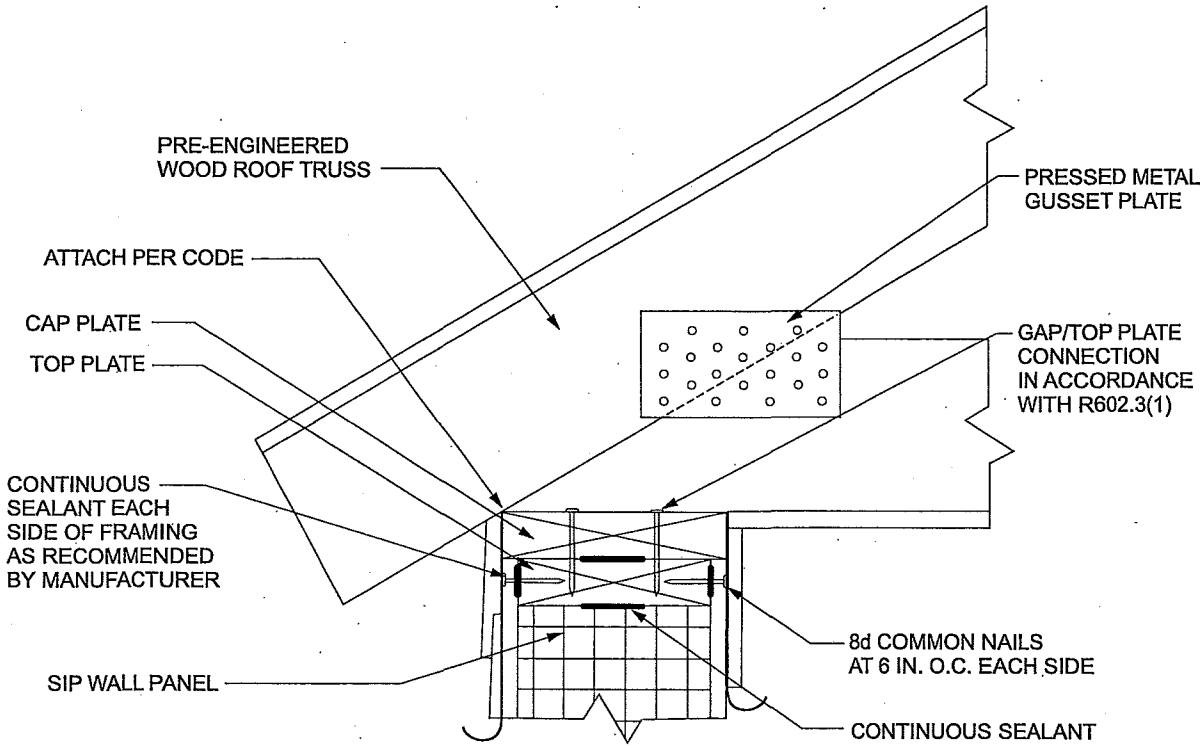

For SI: 1 inch = 25.4 mm.

FIGURE R610.5(3)
TRUSSED ROOF TO TOP PLATE CONNECTION

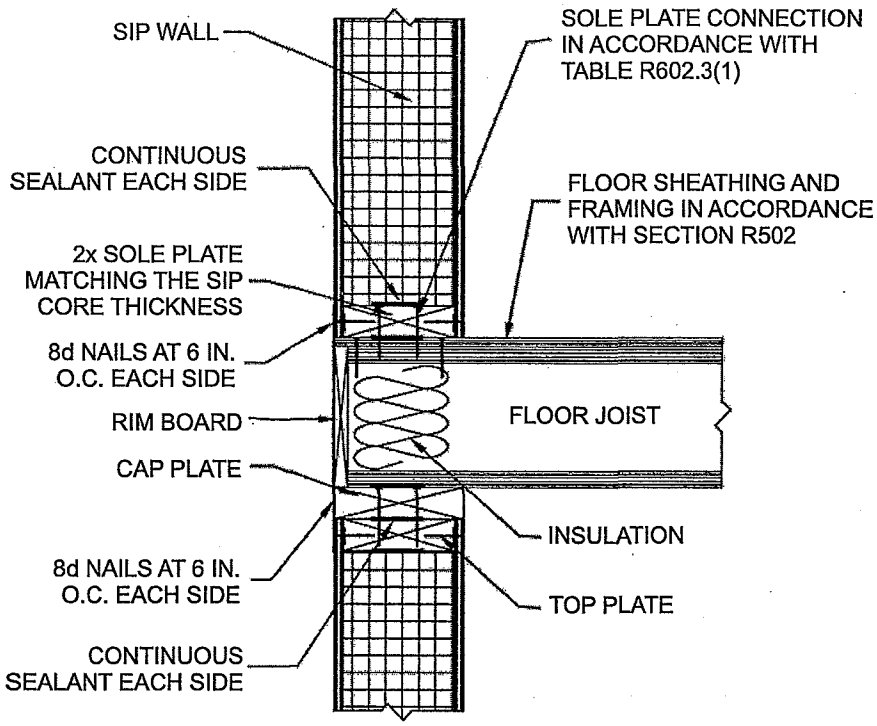

For SI: 1 inch = 25.4 mm.

Note: Figures illustrate SIP-specific attachment requirements. Other connections shall be made in accordance with Tables R602.3(1) and (2) as appropriate.

FIGURE R610.5(4)
SIP WALL-TO-WALL PLATFORM FRAME CONNECTION

2802

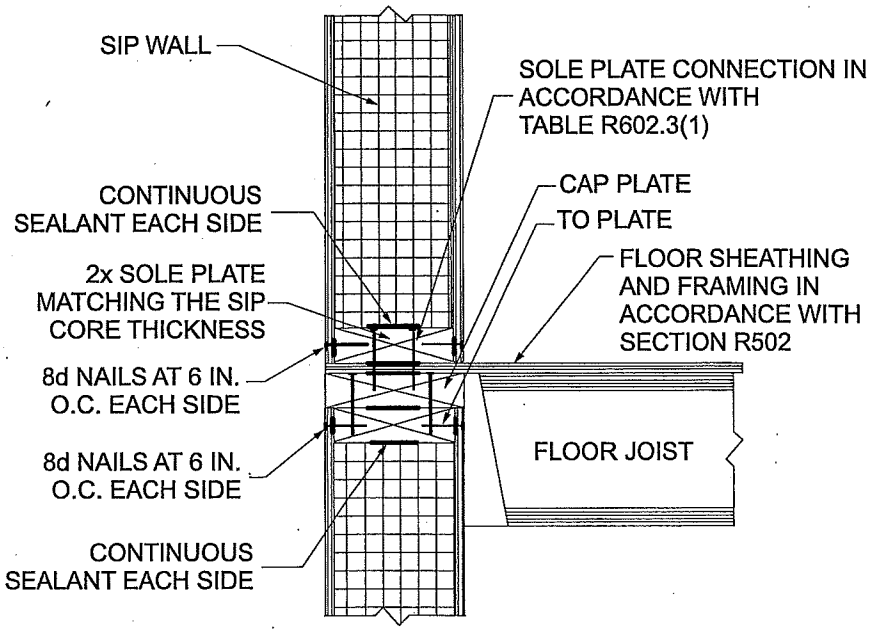

For SI: 1 inch = 25.4 mm.

Note: Figures illustrate SIP-specific attachment requirements. Other connections shall be made in accordance with Tables R602.3(1) and (2), as appropriate.

FIGURE R610.5(5)
SIP WALL-TO-WALL BALLOON FRAME CONNECTION (I-Joist floor shown for illustration only)

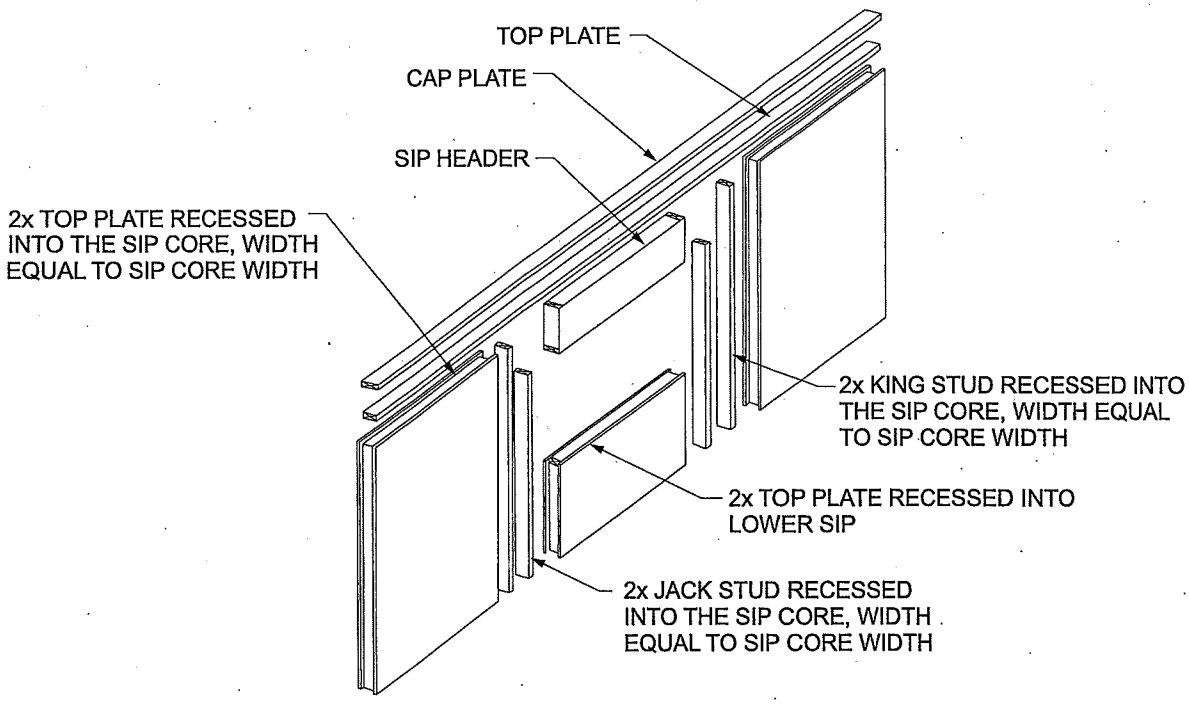

For SI: 1 inch = 25.4 mm.

Notes:

1. Top plates shall be continuous over header.
2. Lower 2x top plate shall have a width equal to the SIP core width and shall be recessed into the top edge of the panel. Cap plate shall be placed over the recessed top plate and shall have a width equal to the SIPs width.
3. SIP facing surfaces shall be nailed to framing and cripples with 8d common or galvanized box nails spaced 6 inches on center.
4. Galvanized nails shall be hot-dipped or tumbled. Framing shall be attached in accordance to Section R602.3(1) unless otherwise provide for in Section R610.

FIGURE R610.5.1
SIP WALL FRAMING CONFIGURATION

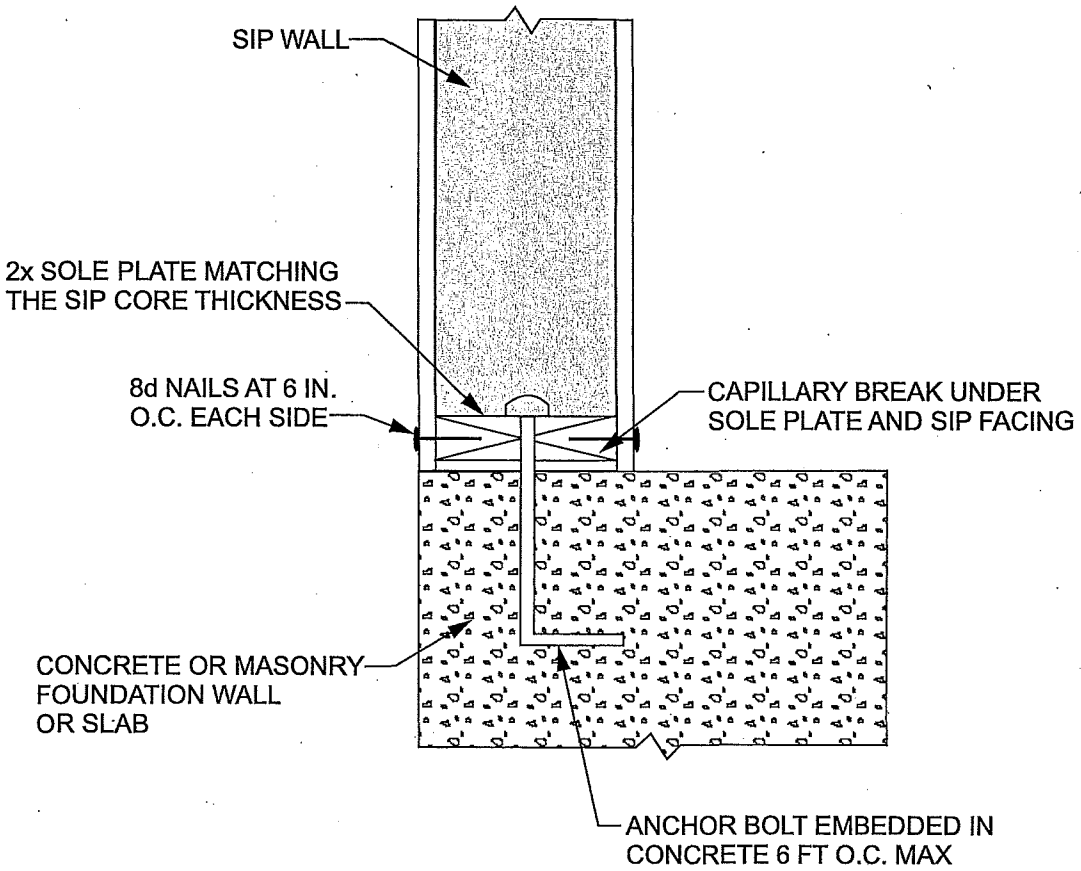

For SI: 1 inch = 25.4 mm, 1 foot = 304.8 mm.

FIGURE R610.5.2
SIP WALL TO CONCRETE SLAB FOR FOUNDATION WALL ATTACHMENT

R610.6 Interior load-bearing walls. Interior load-bearing walls shall be constructed as specified for exterior walls.

R610.7 Drilling and notching. The maximum vertical chase penetration in SIPs shall have a maximum side dimension of 2 inches (51 mm) centered in the panel. Vertical chases shall have a minimum spacing of 24 inches (610 mm) on center. A maximum of two horizontal chases shall be permitted in each wall panel—one at 14 inches (360 mm) plus or minus 2 inches (51 mm) from the bottom of the panel and one at 48 inches (1220 mm) plus or minus 2 inches (51 mm) from the bottom edge of the SIPs panel. Additional penetrations are permitted where justified by analysis.

R610.8 Connection. SIPs shall be connected at vertical in-plane joints in accordance with Figure R610.8 or by other *approved* methods.

R610.9 Corner framing. Corner framing of SIP walls shall be constructed in accordance with Figure R610.9.

R610.10 Headers. SIP headers shall be designed and constructed in accordance with Table R610.10 and Figure R610.5.1. SIP headers shall be continuous sections without splines. Headers shall be not less than $11^7/_8$ inches (302 mm) deep. Headers longer than 4 feet (1219 mm) shall be constructed in accordance with Section R602.7.

R610.10.1 Wood structural panel box headers. Wood structural panel box headers shall be allowed where SIP headers are not applicable. Wood structural panel box headers shall be constructed in accordance with Figure R602.7.3 and Table R602.7.3.

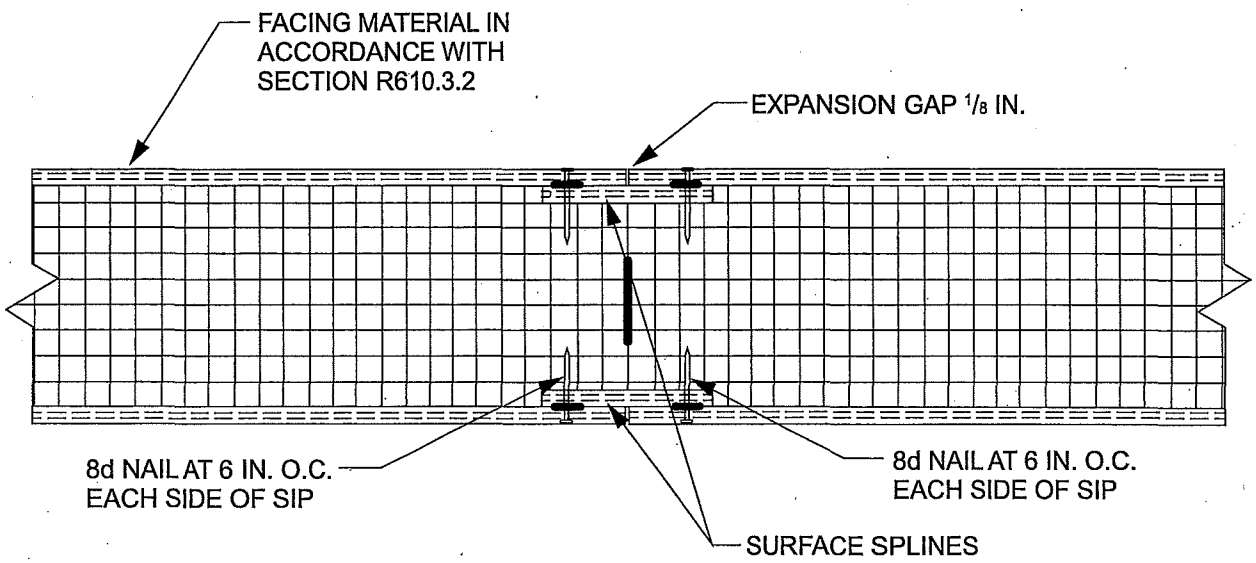

SURFACE SPLINE CONNECTION

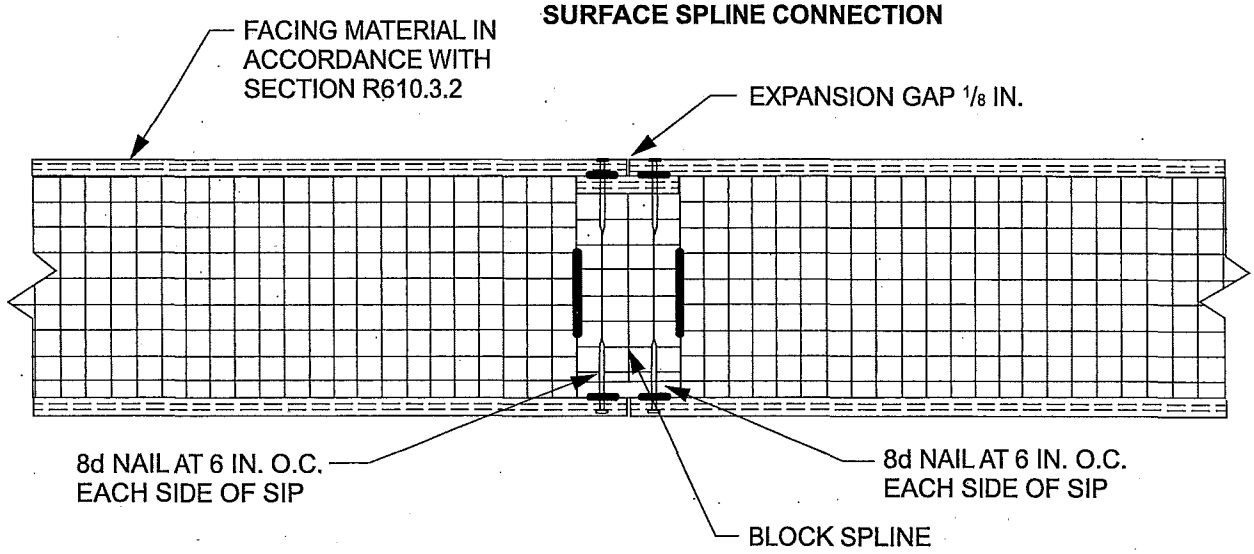

BLOCK SPLINE CONNECTION

For SI: 1 inch = 25.4 mm.

FIGURE R610.8
TYPICAL SIP CONNECTION DETAILS FOR VERTICAL IN-PLANE JOINTS

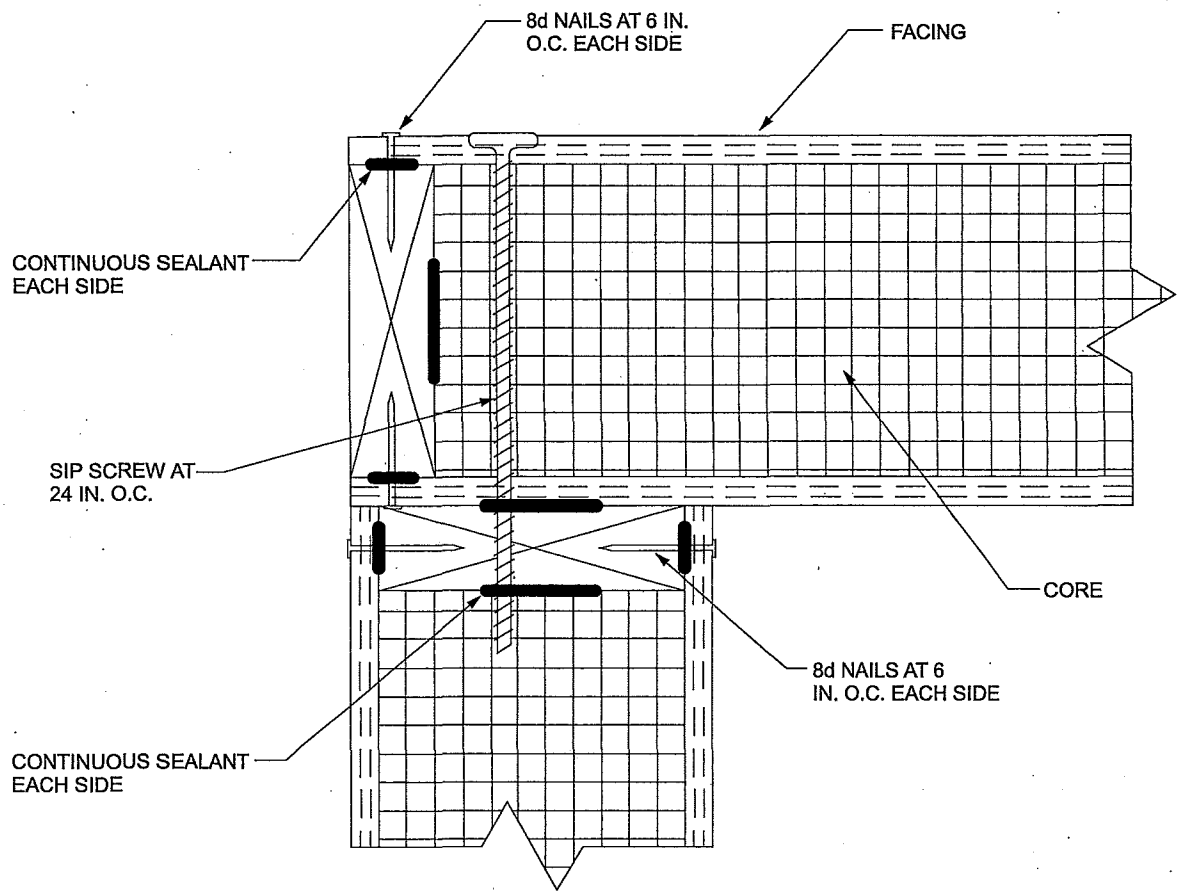

For SI: 1 inch = 25.4 mm.

FIGURE R610.9
SIP CORNER FRAMING DETAIL

TABLE R610.10
MAXIMUM SPANS FOR $11^7/_8$-INCH-DEEP SIP HEADERS (feet)[a]

LOAD CONDITION	SNOW LOAD (psf)	BUILDING width (feet)				
		24	28	32	36	40
Supporting roof only	20	4	4	4	4	2
	30	4	4	4	2	2
	50	2	2	2	2	2
	70	2	2	2	N/A	N/A
Supporting roof and one-story	20	2	2	N/A	N/A	N/A
	30	2	2	N/A	N/A	N/A
	50	2	N/A	N/A	N/A	N/A
	70	N/A	N/A	N/A	N/A	N/A

For SI: 1 inch = 25.4 mm, 1 foot = 304.8 mm, 1 pound per square foot = 0.0479 kPa.
N/A = Not Applicable.
a. Design assumptions:
Maximum deflection criterion: $L/360$.
Maximum roof dead load: 10 psf.
Maximum ceiling load: 5 psf.
Maximum second-floor live load: 30 psf.
Maximum second-floor dead load: 10 psf.
Maximum second-floor dead load from walls: 10 psf.

CHAPTER 7

WALL COVERING

SECTION R701
GENERAL

R701.1 Application. The provisions of this chapter shall control the design and construction of the interior and exterior wall covering for buildings.

R701.2 Installation. Products sensitive to adverse weather shall not be installed until adequate weather protection for the installation is provided. Exterior sheathing shall be dry before applying exterior cover.

SECTION R702
INTERIOR COVERING

R702.1 General. Interior coverings or wall finishes shall be installed in accordance with this chapter and Table R702.1(1), Table R702.1(2), Table R702.1(3) and Table R702.3.5. Interior masonry veneer shall comply with the requirements of Section R703.7.1 for support and Section R703.7.4 for anchorage, except an airspace is not required. Interior finishes and materials shall conform to the flame spread and smoke-development requirements of Section R302.9.

R702.2 Interior plaster.

R702.2.1 Gypsum plaster. Gypsum plaster materials shall conform to ASTM C 5, C 22, C 28, C 35, C 59, C 61, C 587, C 631, C 847, C 933, C 1032 and C 1047, and shall be installed or applied in compliance with ASTM C 843 and C 844. Gypsum lath or gypsum base for veneer plaster shall conform to ASTM C 1396. Plaster shall be not less than three coats where applied over metal lath and not less than two coats where applied over other bases permitted by this section, except that veneer plaster shall be applied in one coat not to exceed $^3/_{16}$ inch (4.76 mm) thickness, provided the total thickness is in accordance with Table R702.1(1).

R702.2.2 Cement plaster. Cement plaster materials shall conform to ASTM C 91 (Type M, S or N), C 150 (Type I, II and III), C 595 [Type IP, I (PM), IS and I (SM), C 847, C 897, C 926, C 933, C 1032, C 1047 and C 1328, and shall be installed or applied in compliance with ASTM C 1063. Gypsum lath shall conform to ASTM C 1396. Plaster shall be not less than three coats where applied over metal lath and not less than two coats where applied over other bases permitted by this section, except that veneer plaster shall be applied in one coat not to exceed $^3/_{16}$ inch (4.76 mm) thickness, provided the total thickness is in accordance with Table R702.1(1).

R702.2.2.1 Application. Each coat shall be kept in a moist condition for not less than 24 hours prior to application of the next coat.

Exception: Applications installed in accordance with ASTM C 926.

R702.2.2.2 Curing. The finish coat for two-coat cement plaster shall not be applied sooner than 48 hours after application of the first coat. For three-coat cement plaster, the second coat shall not be applied sooner than 24 hours after application of the first coat. The finish coat for three-coat cement plaster shall not be applied sooner than 48 hours after application of the second coat.

TABLE R702.1(1)
THICKNESS OF PLASTER

PLASTER BASE	FINISHED THICKNESS OF PLASTER FROM FACE OF LATH, MASONRY, CONCRETE (inches)	
	Gypsum Plaster	Cement Plaster
Expanded metal lath	$^5/_8$, minimum[a]	$^5/_8$, minimum[a]
Wire lath	$^5/_8$, minimum[a]	$^3/_4$, minimum (interior)[b] $^7/_8$, minimum (exterior)[b]
Gypsum lath[g]	$^1/_2$, minimum	$^3/_4$, minimum (interior)[b]
Masonry walls[c]	$^1/_2$, minimum	$^1/_2$, minimum
Monolithic concrete walls[c, d]	$^5/_8$, maximum	$^7/_8$, maximum
Monolithic concrete ceilings[c, d]	$^3/_8$, maximum[e]	$^1/_2$, maximum
Gypsum veneer base[f, g]	$^1/_{16}$, minimum	$^3/_4$, minimum (interior)[b]
Gypsum sheathing[g]	—	$^3/_4$, minimum (interior)[b] $^7/_8$, minimum (exterior)[b]

For SI: 1 inch = 25.4 mm.

a. Where measured from back plane of expanded metal lath, exclusive of ribs, or self-furring lath, plaster thickness shall be $^3/_4$ inch minimum.

b. Where measured from face of support or backing.

c. Because masonry and concrete surfaces vary in plane, thickness of plaster need not be uniform.

d. Where applied over a liquid bonding agent, finish coat shall be permitted to be applied directly to concrete surface.

e. Approved acoustical plaster shall be permitted to be applied directly to concrete or over base coat plaster, beyond the maximum plaster thickness shown.

f. Attachment shall be in accordance with Table R702.3.5.

g. Where gypsum board is used as a base for cement plaster, a water-resistive barrier complying with Section R703.2 shall be provided.

R702.2.3 Support. Support spacing for gypsum or metal lath on walls or ceilings shall not exceed 16 inches (406 mm) for $^3/_8$-inch-thick (9.5 mm) or 24 inches (610 mm) for $^1/_2$-inch-thick (12.7 mm) plain gypsum lath. Gypsum lath shall be installed at right angles to support framing with end joints in adjacent courses staggered by not less than one framing space.

R702.3 Gypsum board and gypsum panel products.

R702.3.1 Materials. Gypsum board and gypsum panel product materials and accessories shall conform to ASTM C 22, C 475, C 514, C 1002, C 1047, C 1177, C 1178, C 1278, C 1396 or C 1658 and shall be installed in accordance with the provisions of this section. Adhesives for the installation of gypsum board and gypsum panel products shall conform to ASTM C 557.

R702.3.2 Wood framing. Wood framing supporting gypsum board and gypsum panel products shall be not less than 2 inches (51 mm) nominal thickness in the least dimension except that wood furring strips not less than 1-inch by 2-inch (25 mm by 51 mm) nominal dimension shall be permitted to be used over solid backing or framing spaced not more than 24 inches (610 mm) on center.

R702.3.3 Cold-formed steel framing. Cold-formed steel framing supporting gypsum board and gypsum panel products shall be not less than $1^1/_4$ inches (32 mm) wide in the least dimension. Nonload-bearing cold-formed steel framing shall comply with AISI S220 and ASTM C645, Section 10. Load-bearing cold-formed steel framing shall comply with AISI S200 and ASTM C 955, Section 8.

TABLE R702.1(2)
GYPSUM PLASTER PROPORTIONS[a]

NUMBER	COAT	PLASTER BASE OR LATH	MAXIMUM VOLUME AGGREGATE PER 100 POUNDS NEAT PLASTER[b] (cubic feet)	
			Damp Loose Sand[a]	Perlite or Vermiculite[c]
Two-coat work	Base coat	Gypsum lath	2.5	2
	Base coat	Masonry	3	3
Three-coat work	First coat	Lath	2[d]	2
	Second coat	Lath	3[d]	2[e]
	First and second coats	Masonry	3	3

For SI: 1 inch = 25.4 mm, 1 cubic foot = 0.0283 m^3, 1 pound = 0.454 kg.

a. Wood-fibered gypsum plaster shall be mixed in the proportions of 100 pounds of gypsum to not more than 1 cubic foot of sand where applied on masonry or concrete.

b. Where determining the amount of aggregate in set plaster, a tolerance of 10 percent shall be allowed.

c. Combinations of sand and lightweight aggregate shall be permitted to be used, provided the volume and weight relationship of the combined aggregate to gypsum plaster is maintained.

d. If used for both first and second coats, the volume of aggregate shall be permitted to be 2.5 cubic feet.

e. Where plaster is 1 inch or more in total thickness, the proportions for the second coat may be increased to 3 cubic feet.

TABLE R702.1(3)
CEMENT PLASTER PROPORTIONS, PARTS BY VOLUME

COAT	CEMENT PLASTER TYPE	CEMENTITIOUS MATERIALS				VOLUME OF AGGREGATE PER SUM OF SEPARATE VOLUMES OF CEMENTITIOUS MATERIALS[b]
		Portland Cement Type I, II or III or Blended Cement Type IP, I (PM), IS or I (SM)	Plastic Cement	Masonry Cement Type M, S or N	Lime	
First	Portland or blended	1			$^3/_4$ - $1^1/_2$[a]	$2^1/_2$ - 4
	Masonry				1	$2^1/_2$ - 4
	Plastic		1			$2^1/_2$ - 4
Second	Portland or blended	1			$^3/_4$ - $1^1/_2$	3 - 5
	Masonry			1		3 - 5
	Plastic		1			3 - 5
Finish	Portland or blended	1			$^3/_4$ - 2	$1^1/_2$ - 3
	Masonry			1		$1^1/_2$ - 3
	Plastic		1			$1^1/_2$ - 3

For SI: 1 inch = 25.4 mm, 1 pound = 0.454 kg.

a. Lime by volume of 0 to $^3/_4$ shall be used where the plaster will be placed over low-absorption surfaces such as dense clay tile or brick.

b. The same or greater sand proportion shall be used in the second coat than used in the first coat.

R702.3.4 Insulating concrete form walls. Foam plastics for insulating concrete form walls constructed in accordance with Sections R404.1.2 and R608 on the interior of *habitable spaces* shall be protected in accordance with Section R316.4. Use of adhesives in conjunction with mechanical fasteners is permitted. Adhesives used for interior and exterior finishes shall be compatible with the insulating form materials.

R702.3.5 Application. Supports and fasteners used to attach gypsum board and gypsum panel products shall comply with Table R702.3.5. Gypsum sheathing shall be attached to exterior walls in accordance with Table R602.3(1). Gypsum board and gypsum panel products shall be applied at right angles or parallel to framing members. All edges and ends of gypsum board and gypsum panel products shall occur on the framing members, except those edges and ends that are perpendicular to the framing members. Interior gypsum board shall not be installed where it is directly exposed to the weather or to water.

TABLE R702.3.5
MINIMUM THICKNESS AND APPLICATION OF GYPSUM BOARD AND GYPSUM PANEL PRODUCTS

THICKNESS OF GYPSUM BOARD OR GYPSUM PANEL PRODUCTS (inches)	APPLICATION	ORIENTATION OF GYPSUM BOARD OR GYPSUM PANEL PRODUCTS TO FRAMING	MAXIMUM SPACING OF FRAMING MEMBERS (inches o.c.)	MAXIMUM SPACING OF FASTENERS (inches)		SIZE OF NAILS FOR APPLICATION TO WOOD FRAMING[c]
				Nails[a]	Screws[b]	
Application without adhesive						
$^3/_8$	Ceiling[d]	Perpendicular	16	7	12	13 gage, $1^1/_4$″ long, $^{19}/_{64}$″ head; 0.098″ diameter, $1^1/_4$″ long, annular-ringed; or 4d cooler nail, 0.080″ diameter, $1^3/_8$″ long, $^7/_{32}$″ head.
	Wall	Either direction	16	8	16	
$^1/_2$	Ceiling	Either direction	16	7	12	13 gage, $1^3/_8$″ long, $^{19}/_{64}$″ head; 0.098″ diameter, $1^1/_4$″ long, annular-ringed; 5d cooler nail, 0.086″ diameter, $1^5/_8$″ long, $^{15}/_{64}$″ head; or gypsum board nail, 0.086″ diameter, $1^5/_8$″ long, $^9/_{32}$″ head.
	Ceiling[d]	Perpendicular	24	7	12	
	Wall	Either direction	24	8	12	
	Wall	Either direction	16	8	16	
$^5/_8$	Ceiling	Either direction	16	7	12	13 gage, $1^5/_8$″ long, $^{19}/_{64}$″ head; 0.098″ diameter, $1^3/_8$″ long, annular-ringed; 6d cooler nail, 0.092″ diameter, $1^7/_8$″ long, $^1/_4$″ head; or gypsum board nail, 0.0915″ diameter, $1^7/_8$″ long, $^{19}/_{64}$″ head.
	Ceiling	Perpendicular	24	7	12	
	Type X at garage ceiling beneath habitable rooms	Perpendicular	24	6	6	$1^7/_8$″ long 6d coated nails or equivalent drywall screws. Screws shall comply with Section R702.3.5.1
	Wall	Either direction	24	8	12	13 gage, $1^5/_8$″ long, $^{19}/_{64}$″ head; 0.098″ diameter, $1^3/_8$″ long, annular-ringed; 6d cooler nail, 0.092″ diameter, $1^7/_8$″ long, $^1/_4$″ head; or gypsum board nail, 0.0915″ diameter, $1^7/_8$″ long, $^{19}/_{64}$″ head.
	Wall	Either direction	16	8	16	
Application with adhesive						
$^3/_8$	Ceiling[d]	Perpendicular	16	16	16	Same as above for $^3/_8$″ gypsum board and gypsum panel products.
	Wall	Either direction	16	16	24	
$^1/_2$ or $^5/_8$	Ceiling	Either direction	16	16	16	Same as above for $^1/_2$″ and $^5/_8$″ gypsum board and gypsum panel products, respectively.
	Ceiling[d]	Perpendicular	24	12	16	
	Wall	Either direction	24	16	24	
Two $^3/_8$ layers	Ceiling	Perpendicular	16	16	16	Base ply nailed as above for $^1/_2$″ gypsum board and gypsum panel products; face ply installed with adhesive.
	Wall	Either direction	24	24	24	

For SI: 1 inch = 25.4 mm.

a. For application without adhesive, a pair of nails spaced not less than 2 inches apart or more than $2^1/_2$ inches apart shall be permitted to be used with the pair of nails spaced 12 inches on center.

b. Screws shall be in accordance with Section R702.3.6. Screws for attaching gypsum board or gypsum panel products to structural insulated panels shall penetrate the wood structural panel facing not less than $^7/_{16}$ inch.

c. Where cold-formed steel framing is used with a clinching design to receive nails by two edges of metal, the nails shall be not less than $^5/_8$ inch longer than the gypsum board or gypsum panel product thickness and shall have ringed shanks. Where the cold-formed steel framing has a nailing groove formed to receive the nails, the nails shall have barbed shanks or be 5d, $13^1/_2$ gage, $1^5/_8$ inches long, $^{15}/_{64}$-inch head for $^1/_2$-inch gypsum board or gypsum panel product; and 6d, 13 gage, $1^7/_8$ inches long, $^{15}/_{64}$-inch head for $^5/_8$-inch gypsum board or gypsum panel product.

d. Three-eighths-inch-thick single-ply gypsum board or gypsum panel product shall not be used on a ceiling where a water-based textured finish is to be applied, or where it will be required to support insulation above a ceiling. On ceiling applications to receive a water-based texture material, either hand or spray applied, the gypsum board or gypsum panel product shall be applied perpendicular to framing. Where applying a water-based texture material, the minimum gypsum board thickness shall be increased from $^3/_8$ inch to $^1/_2$ inch for 16-inch on center framing, and from $^1/_2$ inch to $^5/_8$ inch for 24-inch on center framing or $^1/_2$-inch sag-resistant gypsum ceiling board shall be used.

R702.3.5.1 Screw fastening. Screws for attaching gypsum board and gypsum panel products to wood framing shall be Type W or Type S in accordance with ASTM C 1002 and shall penetrate the wood not less than $^5/_8$ inch (15.9 mm). Gypsum board and gypsum panel products shall be attached to cold-formed steel framing with minimum No. 6 screws. Screws for attaching gypsum board and gypsum panel products to cold-formed steel framing less than 0.033 inch (1 mm) thick shall be Type S in accordance with ASTM C 1002 or bugle head style in accordance with ASTM C 1513 and shall penetrate the steel not less than $^3/_8$ inch (9.5 mm). Screws for attaching gypsum board and gypsum panel products to cold-formed steel framing 0.033 inch to 0.112 inch (1 mm to 3 mm) thick shall be in accordance with ASTM C 954 or bugle head style in accordance with ASTM C 1513. Screws for attaching gypsum board and gypsum panel products to structural insulated panels shall penetrate the wood structural panel facing not less than $^7/_{16}$ inch (11.1 mm).

R702.3.6 Horizontal gypsum board diaphragm ceilings. Gypsum board and gypsum panel products shall be permitted on wood joists to create a horizontal *diaphragm* in accordance with Table R702.3.6. Gypsum board and gypsum panel products shall be installed perpendicular to ceiling framing members. End joints of adjacent courses of board and panels shall not occur on the same joist. The maximum allowable *diaphragm* proportions shall be $1^1/_2$:1 between shear resisting elements. Rotation or cantilever conditions shall not be permitted. Gypsum board or gypsum panel products shall not be used in *diaphragm* ceilings to resist lateral forces imposed by masonry or concrete construction. Perimeter edges shall be blocked using wood members not less than 2-inch by 6-inch (51 mm by 152 mm) nominal dimension. Blocking material shall be installed flat over the top plate of the wall to provide a nailing surface not less than 2 inches (51 mm) in width for the attachment of the gypsum board or gypsum panel product.

R702.3.7 Water-resistant gypsum backing board. Gypsum board used as the base or backer for adhesive application of ceramic tile or other required nonabsorbent finish material shall conform to ASTM C 1396, C 1178 or C 1278. Use of water-resistant gypsum backing board shall be permitted on ceilings. Water-resistant gypsum board shall not be installed over a Class I or II vapor retarder in a shower or tub compartment. Cut or exposed edges, including those at wall intersections, shall be sealed as recommended by the manufacturer.

R702.3.7.1 Limitations. Water-resistant gypsum backing board shall not be used where there will be direct exposure to water, or in areas subject to continuous high humidity.

R702.4 Ceramic tile.

R702.4.1 General. Ceramic tile surfaces shall be installed in accordance with ANSI A108.1, A108.4, A108.5, A108.6, A108.11, A118.1, A118.3, A136.1 and A137.1.

R702.4.2 Backer boards. Materials used as backers for wall tile in tub and shower areas and wall panels in shower areas shall be of materials listed in Table R702.4.2, and installed in accordance with the manufacturer's recommendations.

TABLE R702.4.2
BACKER BOARD MATERIALS

MATERIAL	STANDARD
Glass mat gypsum backing panel	ASTM C 1178
Fiber-reinforced gypsum panels	ASTM C 1278
Nonasbestos fiber-cement backer board	ASTM C 1288 or ISO 8336, Category C
Nonasbestos fiber mat reinforced cementitious backer units	ASTM C 1325

R702.5 Other finishes. Wood veneer paneling and hardboard paneling shall be placed on wood or cold-formed steel framing spaced not more than 16 inches (406 mm) on center. Wood veneer and hard board paneling less than $^1/_4$-inch (6 mm) nominal thickness shall not have less than a $^3/_8$-inch (10 mm) gypsum board or gypsum panel product backer. Wood veneer paneling not less than $^1/_4$-inch (6 mm) nominal thickness shall conform to ANSI/HPVA HP-1. Hardboard paneling shall conform to CPA/ANSI A135.5.

R702.6 Wood shakes and shingles. Wood shakes and shingles shall conform to CSSB *Grading Rules for Wood Shakes and Shingles* and shall be permitted to be installed directly to the studs with maximum 24 inches (610 mm) on-center spacing.

TABLE R702.3.6
SHEAR CAPACITY FOR HORIZONTAL WOOD-FRAMED GYPSUM BOARD DIAPHRAGM CEILING ASSEMBLIES

MATERIAL	THICKNESS OF MATERIAL (min.) (inch)	SPACING OF FRAMING MEMBERS (max.) (inch)	SHEAR VALUE[a, b] (plf of ceiling)	MINIMUM FASTENER SIZE[c, d]
Gypsum board or gypsum panel product	$^1/_2$	16 o.c.	90	5d cooler or wallboard nail; $1^5/_8$-inch long; 0.086-inch shank; $^{15}/_{64}$-inch head
Gypsum board or gypsum panel product	$^1/_2$	24 o.c.	70	5d cooler or wallboard nail; $1^5/_8$-inch long; 0.086-inch shank; $^{15}/_{64}$-inch head

For SI: 1 inch = 25.4 mm, 1 pound per linear foot = 1.488 kg/m.

a. Values are not cumulative with other horizontal diaphragm values and are for short-term loading caused by wind or seismic loading. Values shall be reduced 25 percent for normal loading.

b. Values shall be reduced 50 percent in Seismic Design Categories D_0, D_1, D_2 and E.

c. $1^1/_4$-inch, No. 6 Type S or W screws shall be permitted to be substituted for the listed nails.

d. Fasteners shall be spaced not more than 7 inches on center at all supports, including perimeter blocking, and not less than $^3/_8$ inch from the edges and ends of the gypsum board.

R702.6.1 Attachment. Nails, staples or glue are permitted for attaching shakes or shingles to the wall, and attachment of the shakes or shingles directly to the surface shall be permitted provided the fasteners are appropriate for the type of wall surface material. Where nails or staples are used, two fasteners shall be provided and shall be placed so that they are covered by the course above.

R702.6.2 Furring strips. Where furring strips are used, they shall be 1 inch by 2 inches or 1 inch by 3 inches (25 mm by 51 mm or 25 mm by 76 mm), spaced a distance on center equal to the desired exposure, and shall be attached to the wall by nailing through other wall material into the studs.

R702.7 Vapor retarders. Class I or II vapor retarders are required on the interior side of frame walls in Climate Zones 5, 6, 7, 8 and Marine 4.

Exceptions:

1. Basement walls.
2. Below-grade portion of any wall.
3. Construction where moisture or its freezing will not damage the materials.

R702.7.1 Class III vapor retarders. Class III vapor retarders shall be permitted where any one of the conditions in Table R702.7.1 is met.

TABLE R702.7.1
CLASS III VAPOR RETARDERS

CLIMATE ZONE	CLASS III VAPOR RETARDERS PERMITTED FOR:[a]
Marine 4	Vented cladding over wood structural panels.
	Vented cladding over fiberboard.
	Vented cladding over gypsum.
	Continuous insulation with R-value ≥ 2.5 over 2 × 4 wall.
	Continuous insulation with R-value ≥ 3.75 over 2 × 6 wall.
5	Vented cladding over wood structural panels.
	Vented cladding over fiberboard.
	Vented cladding over gypsum.
	Continuous insulation with R-value ≥ 5 over 2 × 4 wall.
	Continuous insulation with R-value ≥ 7.5 over 2 × 6 wall.
6	Vented cladding over fiberboard.
	Vented cladding over gypsum.
	Continuous insulation with R-value ≥ 7.5 over 2 × 4 wall.
	Continuous insulation with R-value ≥ 11.25 over 2 × 6 wall.
7 and 8	Continuous insulation with R-value ≥ 10 over 2 × 4 wall.
	Continuous insulation with R-value ≥ 15 over 2 × 6 wall.

For SI: 1 pound per cubic foot = 16 kg/m^3.

a. Spray foam with a maximum permeance of 1.5 perms at the installed thickness, applied to the interior cavity side of wood structural panels, fiberboard, insulating sheathing or gypsum is deemed to meet the continuous insulation requirement where the spray foam R-value meets or exceeds the specified continuous insulation R-value.

R702.7.2 Material vapor retarder class. The vapor retarder class shall be based on the manufacturer's certified testing or a tested assembly.

The following shall be deemed to meet the class specified:

Class I: Sheet polyethylene, unperforated aluminum foil.

Class II: Kraft-faced fiberglass batts.

Class III: Latex or enamel paint.

R702.7.3 Minimum clear airspaces and vented openings for vented cladding. For the purposes of this section, vented cladding shall include the following minimum clear airspaces. Other openings with the equivalent vent area shall be permitted.

1. Vinyl lap or horizontal aluminum siding applied over a weather-resistive barrier as specified in Table R703.3(1).
2. Brick veneer with a clear airspace as specified in Table R703.8.4.
3. Other approved vented claddings.

SECTION R703
EXTERIOR COVERING

R703.1 General. Exterior walls shall provide the building with a weather-resistant exterior wall envelope. The exterior wall envelope shall include flashing as described in Section R703.4.

Exception: Log walls designed and constructed in accordance with the provisions of ICC 400.

R703.1.1 Water resistance. The exterior wall envelope shall be designed and constructed in a manner that prevents the accumulation of water within the wall assembly by providing a water-resistant barrier behind the exterior veneer as required by Section R703.2 and a means of draining to the exterior water that enters the assembly. Protection against condensation in the exterior wall assembly shall be provided in accordance with Section R702.7 of this code.

Exceptions:

1. A weather-resistant exterior wall envelope shall not be required over concrete or masonry walls designed in accordance with Chapter 6 and flashed in accordance with Section R703.4 or R703.8.
2. Compliance with the requirements for a means of drainage, and the requirements of Sections R703.2 and R703.4, shall not be required for an exterior wall envelope that has been demonstrated to resist wind-driven rain through testing of the exterior wall envelope, including joints, penetrations and intersections with dissimilar materials, in accordance with ASTM E 331 under the following conditions:
   2.1. Exterior wall envelope test assemblies shall include at least one opening, one control joint, one wall/eave interface and one wall sill. All tested openings and penetrations shall be representative of the intended end-use configuration.

2.2. Exterior wall envelope test assemblies shall be at least 4 feet by 8 feet (1219 mm by 2438 mm) in size.

2.3. Exterior wall assemblies shall be tested at a minimum differential pressure of 6.24 pounds per square foot (299 Pa).

2.4. Exterior wall envelope assemblies shall be subjected to the minimum test exposure for a minimum of 2 hours.

The exterior wall envelope design shall be considered to resist wind-driven rain where the results of testing indicate that water did not penetrate control joints in the exterior wall envelope, joints at the perimeter of openings penetration or intersections of terminations with dissimilar materials.

R703.1.2 Wind resistance. Wall coverings, backing materials and their attachments shall be capable of resisting wind loads in accordance with Tables R301.2(2) and R301.2(3). Wind-pressure resistance of the siding and backing materials shall be determined by ASTM E 330 or other applicable standard test methods. Where wind-pressure resistance is determined by design analysis, data from approved design standards and analysis conforming to generally accepted engineering practice shall be used to evaluate the siding and backing material and its fastening. All applicable failure modes including bending rupture of siding, fastener withdrawal and fastener head pull-through shall be considered in the testing or design analysis. Where the wall covering and the backing material resist wind load as an assembly, use of the design capacity of the assembly shall be permitted.

R703.2 Water-resistive barrier. One layer of No. 15 asphalt felt, free from holes and breaks, complying with ASTM D 226 for Type 1 felt or other approved water-resistive barrier shall be applied over studs or sheathing of all exterior walls. Such felt or material shall be applied horizontally, with the upper layer lapped over the lower layer not less than 2 inches (51 mm). Where joints occur, felt shall be lapped not less than 6 inches (152 mm). The felt or other approved material shall be continuous to the top of walls and terminated at penetrations and building appendages in a manner to meet the requirements of the exterior wall envelope as described in Section R703.1. The water-resistive barrier is not required for detached accessory buildings.

R703.3 Nominal thickness and attachments. The nominal thickness and attachment of exterior wall coverings shall be in accordance with Table R703.3(1), the wall covering material requirements of this section, and the wall covering manufacturer's installation instructions. Cladding attachment over foam sheathing shall comply with the additional requirements and limitations of Sections R703.15 through R703.17. Nominal material thicknesses in Table R703.3(1) are based on a maximum stud spacing of 16 inches (406 mm) on center. Where specified by the siding manufacturer's instructions and supported by a test report or other documentation, attachment to studs with greater spacing is permitted. Fasteners for exterior wall coverings attached to wood framing shall be in accordance with Section R703.3.2 and Table R703.3(1). Exterior wall coverings shall be attached to cold-formed steel light frame construction in accordance with the cladding manufacturer's installation instructions, the requirements of Table R703.3(1) using screw fasteners substituted for the nails specified in accordance with Table R703.3(2), or an approved design.

TABLE R703.3(2)
SCREW FASTENER SUBSTITUTION FOR SIDING ATTACHMENT TO COLD-FORMED STEEL LIGHT FRAME CONSTRUCTION[a, b, c, d, e]

NAIL DIAMETER PER TABLE R703.3(1)	MINIMUM SCREW FASTENER SIZE
0.099″	No. 6
0.113″	No. 7
0.120″	No. 8

For SI: 1 inch = 25.4 mm

a. Screws shall comply with ASTM C 1513 and shall penetrate a minimum of three threads through minimum 33 mil (20 gage) cold-formed steel frame construction.

b. Screw head diameter shall be not less than the nail head diameter required by Table R703.3(1).

c. Number and spacing of screw fasteners shall comply with Table R703.3(1).

d. Pan head, hex washer head, modified truss head or other screw head types with a flat attachment surface under the head shall be used for vinyl siding attachment.

e. Aluminum siding shall not be fastened directly to cold-formed steel light frame construction.

R703.3.1 Wind limitations. Where the design wind pressure exceeds 30 psf or where the limits of Table R703.3.1 are exceeded, the attachment of wall coverings shall be designed to resist the component and cladding loads specified in Table R301.2(2), adjusted for height and exposure in accordance with Table R301.2(3). For the determination of wall covering attachment, component and cladding loads shall be determined using an effective wind area of 10 square feet (0.93 m^2).

TABLE R703.3.1
LIMITS FOR ATTACHMENT PER TABLE R703.3(1)

MAXIMUM MEAN ROOF HEIGHT			
Ultimate Wind Speed (mph 3-second gust)	Exposure		
	B	C	D
115	NL	50′	20′
120	NL	30′	DR
130	60′	15′	DR
140	35′	DR	DR

For SI: 1 foot = 304.8 mm, 1 mile per hour = 0.447 m/s.
NL = Not limited by Table R703.3.1, DR = Design required.

TABLE R703.3(1)
SIDING MINIMUM ATTACHMENT AND MINIMUM THICKNESS

SIDING MATERIAL		NOMINAL THICKNESS (inches)	JOINT TREATMENT	TYPE OF SUPPORTS FOR THE SIDING MATERIAL AND FASTENERS					
				Wood or wood structural panel sheathing into stud	Fiberboard sheathing into stud	Gypsum sheathing into stud	Foam plastic sheathing into stud[l]	Direct to studs	Number or spacing of fasteners
Anchored veneer: brick, concrete, masonry or stone (see Section R703.8)		2	Section R703.8	Section R703.8					
Adhered veneer: concrete, stone or masonry (see Section R703.12)		—	Section R703.12	Section R703.12					
Fiber cement siding	Panel siding (see Section R703.10.1)	$^5/_{16}$	Section R703.10.1	6d common (2″ × 0.113″)	6d common (2″ × 0.113″)	6d common (2″ × 0.113″)	6d common (2″ × 0.113″)	4d common ($1^1/_2$″ × 0.099″)	6″ panel edges 12″ inter. sup.
	Lap siding (see Section R703.10.2)	$^5/_{16}$	Section R703.10.2	6d common (2″ × 0.113″)	6d common (2″ × 0.113″)	6d common (2″ × 0.113″)	6d common (2″ × 0.113″)	6d common (2″ × 0.113″) or 11 gage roofing nail	Note f
Hardboard panel siding (see Section R703.3)		$^7/_{16}$	—	0.120″ nail (shank) with 0.225″ head	0.120″ nail (shank) with 0.225″ head	0.120″ nail (shank) with 0.225″ head	0.120″ nail (shank) with 0.225″ head	0.120″ nail (shank) with 0.225″ head	6″ panel edges 12″ inter. sup.[d]
Hardboard lap siding (see Section R703.3)		$^7/_{16}$	Note e	0.099″ nail (shank) with 0.240″ head	0.099″ nail (shank) with 0.240″ head	0.099″ nail (shank) with 0.240″ head	0.099″ nail (shank) with 0.240″ head	0.099″ nail (shank) with 0.240″ head	Same as stud spacing 2 per bearing
Horizontal aluminum[a]	Without insulation	0.019[b]	Lap	Siding nail $1^1/_2$″ × 0.120″	Siding nail 2″ × 0.120″	Siding nail 2″ × 0.120″	Siding nail[h] $1^1/_2$″ × 0.120″	Not allowed	Same as stud spacing
		0.024	Lap	Siding nail $1^1/_2$″ × 0.120″	Siding nail 2″ × 0.120″	Siding nail 2″ × 0.120″	Siding nail[h] $1^1/_2$″ × 0.120″	Not allowed	
	With insulation	0.019	Lap	Siding nail $1^1/_2$″ × 0.120″	Siding nail $2^1/_2$″ × 0.120″	Siding nail $2^1/_2$″ × 0.120″	Siding nail[h] $1^1/_2$″ × 0.120″	Siding nail $1^1/_2$″ × 0.120″	
Insulated vinyl siding[j]		0.035 (vinyl siding layer only)	Lap	0.120 nail (shank) with a 0.313 head or 16-gage crown[h, i]	0.120 nail (shank) with a 0.313 head or 16-gage crown[h]	0.120 nail (shank) with a 0.313 head or 16-gage crown[h]	0.120 nail (shank) with a 0.313 head Section R703.11.2	Not allowed	16 inches on center or specified by manufacturer instructions, test report or other sections of this code
Particleboard panels		$^3/_8$	—	6d box nail (2″ × 0.099″)	6d box nail (2″ × 0.099″)	6d box nail (2″ × 0.099″)	6d box nail (2″ × 0.099″)	Not allowed	6″ panel edges 12″ inter. sup.
		$^1/_2$	—	6d box nail (2″ × 0.099″)	6d box nail (2″ × 0.099″)	6d box nail (2″ × 0.099″)	6d box nail (2″ × 0.099″)	6d box nail (2″ × 0.099″)	
		$^5/_8$	—	6d box nail (2″ × 0.099″)	8d box nail ($2^1/_2$″ × 0.113″)	8d box nail ($2^1/_2$″ × 0.113″)	6d box nail (2″ × 0.099″)	6d box nail (2″ × 0.099″)	
Polypropylene siding[k]		Not applicable	Lap	Section 703.14.1	Section 703.14.1	Section 703.14.1	Section 703.14.1	Not allowed	As specified by the manufacturer instructions, test report or other sections of this code

(continued)

TABLE R703.3(1)—continued
SIDING MINIMUM ATTACHMENT AND MINIMUM THICKNESS

SIDING MATERIAL		NOMINAL THICKNESS (inches)	JOINT TREATMENT	TYPE OF SUPPORTS FOR THE SIDING MATERIAL AND FASTENERS					
				Wood or wood structural panel sheathing into stud	Fiberboard sheathing into stud	Gypsum sheathing into stud	Foam plastic sheathing into stud[l]	Direct to studs	Number or spacing of fasteners
Steel[c]		29 ga.	Lap	Siding nail ($1^3/_4$″ × 0.113″) Staple–$1^3/_4$″	Siding nail ($2^3/_4$″ × 0.113″) Staple–$2^1/_2$″	Siding nail ($2^1/_2$″ × 0.113″) Staple–$2^1/_4$″	Siding nail ($1^3/_4$″ x 0.113″) Staple–$1^3/_4$″	Not allowed	Same as stud spacing
Vinyl siding (see Section R703.11)		0.035	Lap	0.120″ nail (shank) with a 0.313″ head or 16-gage staple with $^3/_8$- to $^1/_2$-inch crown[h, i]	0.120″ nail (shank) with a 0.313″ head or 16-gage staple with $^3/_8$- to $^1/_2$-inch crown[h]	0.120″ nail (shank) with a 0.313″ head or 16- gage staple with $^3/_8$- to $^1/_2$-inch crown[h]	0.120″ nail (shank) with a 0.313 head Section R703.11.2	Not allowed	16 inches on center or as specified by the manufacturer instructions or test report
Wood siding (see Section R703.3)	Wood rustic, drop	$^3/_8$ min.	Lap	6d box or siding nail (2″ × 0.099″)	6d box or siding nail (2″ × 0.099″)	6d box or siding nail (2″ × 0.099″)	6d box or siding nail (2″ × 0.099″)	8d box or siding nail ($2^1/_2$″ × 0.113″) Staple–2″	Face nailing up to 6″ widths, 1 nail per bearing; 8″ widths and over, 2 nails per bearing
	Shiplap	$^{19}/_{32}$ average	Lap						
	Bevel	$^7/_{16}$							
	Butt tip	$^3/_{16}$	Lap						
Wood structural panel ANSI/APA PRP-210 siding (exterior grade) (see Section R703.3)		$^3/_8 - ^1/_2$	Note e	2″ × 0.099″ siding nail	$2^1/_2$″ × 0.113″ siding nail	$2^1/_2$″ × 0.113″ siding nail	$2^1/_2$″ × 0.113″ siding nail	2″ × 0.099″ siding nail	6″ panel edges 12″ inter. sup.
Wood structural panel lap siding (see Section R703.3)		$^3/_8 - ^1/_2$	Note e Note g	2″ × 0.099″ siding nail	$2^1/_2$″ × 0.113″ siding nail	$2^1/_2$″ × 0.113″ siding nail	$2^1/_2$″ × 0.113″ siding nail	2″ × 0.099″ siding nail	8″ along bottom edge

For SI: 1 inch = 25.4 mm.

a. Aluminum nails shall be used to attach aluminum siding.
b. Aluminum (0.019 inch) shall be unbacked only where the maximum panel width is 10 inches and the maximum flat area is 8 inches. The tolerance for aluminum siding shall be +0.002 inch of the nominal dimension.
c. Shall be of approved type.
d. Where used to resist shear forces, the spacing must be 4 inches at panel edges and 8 inches on interior supports.
e. Vertical end joints shall occur at studs and shall be covered with a joint cover or shall be caulked.
f. Face nailing: one 6d common nail through the overlapping planks at each stud. Concealed nailing: one 11-gage $1^1/_2$-inch-long galv. roofing nail through the top edge of each plank at each stud in accordance with the manufacturer's installation instructions.
g. Vertical joints, if staggered, shall be permitted to be away from studs if applied over wood structural panel sheathing.
h. Minimum fastener length must be sufficient to penetrate sheathing other nailable substrate and framing a total of a minimum of $1^1/_4$ inches or in accordance with the manufacturer's installation instructions.
i. Where specified by the manufacturer's instructions and supported by a test report, fasteners are permitted to penetrate into or fully through nailable sheathing or other nailable substrate of minimum thickness specified by the instructions or test report, without penetrating into framing.
j. Insulated vinyl siding shall comply with ASTM D 7793.
k. Polypropylene siding shall comply with ASTM D 7254.
l. Cladding attachment over foam sheathing shall comply with the additional requirements and limitations of Sections R703.15, R703.16 and R703.17.

R703.3.2 Fasteners. Exterior wall coverings shall be securely fastened with aluminum, galvanized, stainless steel or rust-preventative coated nails or staples in accordance with Table R703.3(1) or with other approved corrosion-resistant fasteners in accordance with the wall covering manufacturer's installation instructions. Nails and staples shall comply with ASTM F 1667. Nails shall be T-head, modified round head, or round head with smooth or deformed shanks. Staples shall have a minimum crown width of $^7/_{16}$ inch (11.1 mm) outside diameter and be manufactured of minimum 16-gage wire. Where fiberboard, gypsum, or foam plastic sheathing backing is used, nails or staples shall be driven into the studs. Where wood or wood structural panel sheathing is used, fasteners shall be driven into studs unless otherwise permitted to be driven into sheathing in accordance with either the siding manufacturer's installation instructions or Table R703.3.2.

R703.3.3 Minimum fastener length and penetration. Fasteners shall have the greater of the minimum length specified in Table R703.3(1) or as required to provide a minimum penetration into framing as follows:

1. Fasteners for horizontal aluminum siding, steel siding, particleboard panel siding, wood structural panel siding in accordance with ANSI/APA-PRP 210, fiber-cement panel siding and fiber-cement lap siding installed over foam plastic sheathing shall penetrate not less than $1^1/_2$ inches (38 mm) into framing or shall be in accordance with the manufacturer's installation instructions.
2. Fasteners for hardboard panel and lap siding shall penetrate not less than $1^1/_2$ inches (38 mm) into framing.
3. Fasteners for vinyl siding and insulated vinyl siding installed over wood or wood structural panel sheathing shall penetrate not less than $1^1/_4$ inches (32 mm) into sheathing and framing combined. Vinyl siding and insulated vinyl siding shall be permitted to be installed with fasteners penetrating into or through wood or wood structural sheathing of minimum thickness as specified by the manufacturer's instructions or test report, with or without penetration into the framing. Where the fastener penetrates fully through the sheathing, the end of the fastener shall extend not less than $^1/_4$ inch (6.4 mm) beyond the opposite face of the sheathing. Fasteners for vinyl siding and insulated vinyl siding installed over foam plastic sheathing shall be in accordance with Section R703.11.2. Fasteners for vinyl siding and insulated vinyl siding installed over fiberboard or gypsum sheathing shall penetrate not less than $1^1/_4$ inches (32 mm) into framing.
4. Fasteners for vertical or horizontal wood siding shall penetrate not less than $1^1/_2$ inches (38 mm) into studs, studs and wood sheathing combined, or blocking.
5. Fasteners for siding material installed over foam plastic sheathing shall have sufficient length to accommodate foam plastic sheathing thickness and to penetrate framing or sheathing and framing combined, as specified in Items 1 through 4.

R703.4 Flashing. Approved corrosion-resistant flashing shall be applied shingle-fashion in a manner to prevent entry of water into the wall cavity or penetration of water to the building structural framing components. Self-adhered membranes used as flashing shall comply with AAMA 711. Fluid-applied membranes used as flashing in exterior walls shall comply with AAMA 714. The flashing shall extend to the surface of the exterior wall finish. Approved corrosion-resistant flashings shall be installed at the following locations:

1. Exterior window and door openings. Flashing at exterior window and door openings shall extend to the surface of the exterior wall finish or to the water-resistive barrier complying with Section 703.2 for subsequent drainage. Mechanically attached flexible flashings shall comply with AAMA 712. Flashing at exterior window and door openings shall be installed in accordance with one or more of the following:
   1.1. The fenestration manufacturer's installation and flashing instructions, or for applications not addressed in the fenestration manufacturer's instructions, in accordance with the flashing manufacturer's instructions. Where flashing instructions or details are not provided, pan flashing shall be installed at the sill of exterior window and door openings. Pan flashing shall be sealed or sloped in such a manner as to direct water to the surface of the exterior wall finish or to the water-resistive barrier for subsequent drainage. Openings using pan flashing shall incorporate flashing or protection at the head and sides.
   1.2. In accordance with the flashing design or method of a registered design professional.

TABLE R703.3.2
OPTIONAL SIDING ATTACHMENT SCHEDULE FOR FASTENERS WHERE NO STUD PENETRATION NECESSARY

APPLICATION	NUMBER AND TYPE OF FASTENER	SPACING OF FASTENERS[b]
Exterior wall covering (weighing 3 psf or less) attachment to wood structural panel sheathing, either direct or over foam sheathing a maximum of 2 inches thick.[a] Note: Does not apply to vertical siding.	Ring shank roofing nail (0.120″ min. dia.)	12″ o.c.
	Ring shank nail (0.148″ min. dia.)	15″ o.c.
	No. 6 screw (0.138″ min. dia.)	12″ o.c.
	No. 8 screw (0.164″ min. dia.)	16″ o.c.

For SI: 1 inch = 25.4 mm.

a. Fastener length shall be sufficient to penetrate back side of the wood structural panel sheathing by at least $^1/_4$ inch. The wood structural panel sheathing shall be not less than $^7/_{16}$ inch in thickness.

b. Spacing of fasteners is per 12 inches of siding width. For other siding widths, multiply "Spacing of Fasteners" above by a factor of 12/s, where "s" is the siding width in inches. Fastener spacing shall never be greater than the manufacturer's minimum recommendations.

1.3. In accordance with other approved methods.

2. At the intersection of chimneys or other masonry construction with frame or stucco walls, with projecting lips on both sides under stucco copings.
3. Under and at the ends of masonry, wood or metal copings and sills.
4. Continuously above all projecting wood trim.
5. Where exterior porches, decks or stairs attach to a wall or floor assembly of wood-frame construction.
6. At wall and roof intersections.
7. At built-in gutters.

R703.5 Wood, hardboard and wood structural panel siding. Wood, hardboard, and wood structural panel siding shall be installed in accordance with this section and Table R703.3. Hardboard siding shall comply with CPA/ANSI A135.6. Hardboard siding used as architectural trim shall comply with CPA/ANSI A 135.7.

R703.5.1 Vertical wood siding. Wood siding applied vertically shall be nailed to horizontal nailing strips or blocking set not more than 24 inches (610 mm) on center.

R703.5.2 Panel siding. $^3/_8$-inch (9.5 mm) wood structural panel siding shall not be applied directly to studs spaced more than 16 inches (406 mm) on center where long dimension is parallel to studs. Wood structural panel siding $^7/_{16}$ inch (11.1 mm) or thinner shall not be applied directly to studs spaced more than 24 inches (610 mm) on center. The stud spacing shall not exceed the panel span rating provided by the manufacturer unless the panels are installed with the face grain perpendicular to the studs or over sheathing approved for that stud spacing.

Joints in wood, hardboard or wood structural panel siding shall be made as follows unless otherwise approved. Vertical joints in panel siding shall occur over framing members, unless wood or wood structural panel sheathing is used, and shall be shiplapped or covered with a batten. Horizontal joints in panel siding shall be lapped not less than 1 inch (25 mm) or shall be shiplapped or flashed with Z-flashing and occur over solid blocking, wood or wood structural panel sheathing.

R703.5.3 Horizontal wood siding. Horizontal lap siding shall be installed in accordance with the manufacturer's recommendations. Where there are no recommendations the siding shall be lapped not less than 1 inch (25 mm), or $^1/_2$ inch (12.7 mm) if rabbeted, and shall have the ends caulked, covered with a batten or sealed and installed over a strip of flashing.

R703.6 Wood shakes and shingles. Wood shakes and shingles shall conform to CSSB *Grading Rules for Wood Shakes and Shingles.*

R703.6.1 Application. Wood shakes or shingles shall be applied either single course or double course over nominal $^1/_2$-inch (12.7 mm) wood-based sheathing or to furring strips over $^1/_2$-inch (12.7 mm) nominal nonwood sheathing. A water-resistive barrier shall be provided over all sheathing, with horizontal overlaps in the membrane of not less than 2 inches (51 mm) and vertical overlaps of not less than 6 inches (152 mm). Where horizontal furring strips are used, they shall be 1 inch by 3 inches or 1 inch by 4 inches (25 mm by 76 mm or 25 mm by 102 mm) and shall be fastened to the studs with minimum 7d or 8d box nails and shall be spaced a distance on center equal to the actual weather exposure of the shakes or shingles, not to exceed the maximum exposure specified in Table R703.6.1. When installing shakes or shingles over a nonpermeable water-resistive barrier, furring strips shall be placed first vertically over the barrier and in addition, horizontal furring strips shall be fastened to the vertical furring strips prior to attaching the shakes or shingles to the horizontal furring strips. The spacing between adjacent shingles to allow for expansion shall be $^1/_8$ inch (3.2 mm) to $^1/_4$ inch (6.4 mm) apart, and between adjacent shakes shall be $^3/_8$ inch (9.5 mm) to $^1/_2$ inch (12.7 mm) apart. The offset spacing between joints in adjacent courses shall be not less than $1^1/_2$ inches (38 mm).

TABLE R703.6.1
MAXIMUM WEATHER EXPOSURE FOR WOOD SHAKES AND SHINGLES ON EXTERIOR WALLS[a, b, c]
(Dimensions are in inches)

LENGTH	EXPOSURE FOR SINGLE COURSE	EXPOSURE FOR DOUBLE COURSE
Shingles[a]		
16	7	12[b]
18	8	14[c]
24	$10^1/_2$	16[d]
Shakes[a]		
18	8	14
24	$10^1/_2$	18

For SI: 1 inch = 25.4 mm.
a. Dimensions given are for No. 1 grade.
b. A maximum 9-inch exposure is permitted for No. 2 grade.
c. A maximum 10-inch exposure is permitted for No. 2 grade.
d. A maximum 14-inch exposure is permitted for No. 2 grade.

R703.6.2 Weather exposure. The maximum weather exposure for shakes and shingles shall not exceed that specified in Table 703.6.1.

R703.6.3 Attachment. Wood shakes or shingles shall be installed according to this chapter and the manufacturer's instructions. Each shake or shingle shall be held in place by two stainless steel Type 304, Type 316 or hot-dipped zinc-coated galvanized corrosion-resistant box nails in accordance with Table R703.6.3(1) or R703.6.3(2). The hot-dipped zinc-coated galvanizing shall conform to minimum standard ASTM A 153D, 1.0 ounce per square foot. Alternatively, 16-gage stainless steel Type 304 or Type 316 staples with crown widths $^7/_{16}$ inch (11 mm) minimum, $^3/_4$ inch (19 mm) maximum, shall be used and the crown of the staple shall be placed parallel with the butt of the shake or the shingle. In single-course application, the fasteners shall be concealed by the course above and shall be driven approximately 1 inch (25 mm) above the butt line of the succeeding course and $^3/_4$ inch (19 mm) from the edge. In double-course applications, the exposed shake or shingle shall be face-nailed with two fasteners, driven approximately 2 inches (51 mm) above the butt line and $^3/_4$

inch (19 mm) from each edge. Fasteners installed within 15 miles (24 km) of salt water coastal areas shall be stainless steel Type 316. Fasteners for fire-retardant-treated shakes or shingles in accordance with Section R902 or pressure-impregnated-preservative-treated shakes or shingles in accordance with AWPA U1 shall be stainless steel Type 316. The fasteners shall penetrate the sheathing or furring strips by not less than $^1/_2$ inch (13 mm) and shall not be overdriven. Fasteners for untreated (natural) and treated products shall comply with ASTM F 1667.

R703.6.4 Bottom courses. The bottom courses shall be doubled.

R703.7 Exterior plaster. Installation of these materials shall be in compliance with ASTM C 926, ASTM C 1063 and the provisions of this code.

R703.7.1 Lath. Lath and lath attachments shall be of corrosion-resistant materials. Expanded metal or woven wire lath shall be attached with $1^1/_2$-inch-long (38 mm), 11 gage nails having a $^7/_{16}$-inch (11.1 mm) head, or $^7/_8$-inch-long (22.2 mm), 16 gage staples, spaced not less than 6 inches (152 mm), or as otherwise approved.

R703.7.2 Plaster. Plastering with portland cement plaster shall be not less than three coats where applied over metal lath or wire lath and shall be not less than two coats where applied over masonry, concrete, pressure-preservative-treated wood or decay-resistant wood as specified in Section R317.1 or gypsum backing. If the plaster surface is completely covered by veneer or other facing material or is completely concealed, plaster application need be only two coats, provided the total thickness is as set forth in Table R702.1(1).

On wood-frame construction with an on-grade floor slab system, exterior plaster shall be applied to cover, but not extend below, lath, paper and screed.

The proportion of aggregate to cementitious materials shall be as set forth in Table R702.1(3).

R703.7.2.1 Weep screeds. A minimum 0.019-inch (0.5 mm) (No. 26 galvanized sheet gage), corrosion-resistant weep screed or plastic weep screed, with a minimum vertical attachment flange of $3^1/_2$ inches (89 mm) shall be provided at or below the foundation plate line on exterior stud walls in accordance with ASTM C 926. The weep screed shall be placed not less than 4 inches

TABLE R703.6.3(1)
SINGLE COURSE SIDEWALL FASTENERS

SINGLE COURSE SIDEWALL FASTENERS			
Product type	Nail type and minimum length (inches)	Minimum head diameter (inches)	Minimum shank thickness (inches)
R & R and sanded shingles	Type		
16″ and 18″ shingles	3d box $1^1/_4$	0.19	0.08
24″ shingles	4d box $1^1/_2$	0.19	0.08
Grooved shingles	Type		
16″ and 18″ shingles	3d box $1^1/_4$	0.19	0.08
24″ shingles	4d box $1^1/_2$	0.19	0.08
Split and sawn shakes	Type		
18″ straight-split shakes	5d box $1^3/_4$	0.19	0.08
18″ and 24″ handsplit shakes	6d box 2	0.19	0.0915
24″ tapersplit shakes	5d box $1^3/_4$	0.19	0.08
18″ and 24″ tapersawn shakes	6d box 2	0.19	0.0915

For SI: 1 inch = 25.4 mm.

TABLE R703.6.3(2)
DOUBLE COURSE SIDEWALL FASTENERS

DOUBLE COURSE SIDEWALL FASTENERS			
Product type	Nail type and minimum length	Minimum head diameter (inches)	Minimum shank thickness (inches)
R & R and sanded shingles			
16,″ 8″ and 24″ shingles	5d box $1^3/_4$ or same size casing nails	0.19	0.08
Grooved shingles			
16,″ 18″ and 24″shingles	5d box $1^3/_4$	0.19	0.08
Split and sawn shakes			
18″ straight-split shakes	7d box $2^1/_4$ or 8d $2^1/_2$	0.19	0.099
18″ and 24″ handsplit shakes	7d box $2^1/_4$ or 8d $2^1/_2$	0.19	0.099
24″ tapersplit shakes	7d box $2^1/_4$ or 8d $2^1/_2$	0.19	0.099
18″ and 24″ tapersawn shakes	7d box $2^1/_4$ or 8d $2^1/_2$	0.19	0.099

For SI: 1 inch = 25.4 mm.

(102 mm) above the earth or 2 inches (51 mm) above paved areas and shall be of a type that will allow trapped water to drain to the exterior of the building. The weather-resistant barrier shall lap the attachment flange. The exterior lath shall cover and terminate on the attachment flange of the weep screed.

R703.7.3 Water-resistive barriers. Water-resistive barriers shall be installed as required in Section R703.2 and, where applied over wood-based sheathing, shall include a water-resistive vapor-permeable barrier with a performance at least equivalent to two layers of Grade D paper. The individual layers shall be installed independently such that each layer provides a separate continuous plane and any flashing (installed in accordance with Section R703.4) intended to drain to the water-resistive barrier is directed between the layers.

Exception: Where the water-resistive barrier that is applied over wood-based sheathing has a water resistance equal to or greater than that of 60-minute Grade D paper and is separated from the stucco by an intervening, substantially nonwater-absorbing layer or designed drainage space.

R703.7.4 Application. Each coat shall be kept in a moist condition for at least 48 hours prior to application of the next coat.

Exception: Applications installed in accordance with ASTM C 926.

R703.7.5 Curing. The finish coat for two-coat cement plaster shall not be applied sooner than seven days after application of the first coat. For three-coat cement plaster, the second coat shall not be applied sooner than 48 hours after application of the first coat. The finish coat for three-coat cement plaster shall not be applied sooner than seven days after application of the second coat.

R703.8 Anchored stone and masonry veneer, general. Anchored stone and masonry veneer shall be installed in accordance with this chapter, Table R703.3(1) and Figure R703.8. These veneers installed over a backing of wood or cold-formed steel shall be limited to the first story above grade plane and shall not exceed 5 inches (127 mm) in thickness. See Section R602.10 for wall bracing requirements for masonry veneer for wood-framed construction and Section R603.9.5 for wall bracing requirements for masonry veneer for cold-formed steel construction.

Exceptions:

1. For buildings in Seismic Design Categories A, B and C, exterior stone or masonry veneer, as specified in Table R703.8(1), with a backing of wood or steel framing shall be permitted to the height specified in Table R703.8(1) above a noncombustible foundation.
2. For detached one- or two-family dwellings in Seismic Design Categories D_0, D_1 and D_2, exterior stone or masonry veneer, as specified in Table R703.8(2), with a backing of wood framing shall be permitted to the height specified in Table R703.8(2) above a noncombustible foundation.

R703.8.1 Interior veneer support. Veneers used as interior wall finishes shall be permitted to be supported on wood or cold-formed steel floors that are designed to support the loads imposed.

R703.8.2 Exterior veneer support. Except in Seismic Design Categories D_0, D_1 and D_2, exterior masonry veneers having an installed weight of 40 pounds per square foot (195 kg/m^2) or less shall be permitted to be supported on wood or cold-formed steel construction. Where masonry veneer supported by wood or cold-formed steel construction adjoins masonry veneer supported by the foundation, there shall be a movement joint between the veneer supported by the wood or cold-formed steel construction and the veneer supported by the foundation. The wood or cold-formed steel construction supporting the masonry veneer shall be designed to limit the deflection to $^1/_{600}$ of the span for the supporting members. The design of the wood or cold-formed steel construction shall consider the weight of the veneer and any other loads.

R703.8.2.1 Support by steel angle. A minimum 6-inch by 4-inch by $^5/_{16}$-inch (152 mm by 102 mm by 8 mm) steel angle, with the long leg placed vertically, shall be anchored to double 2-inch by 4-inch (51 mm by 102 mm) wood studs or double 350S162 cold-formed steel studs at a maximum on-center spacing of 16 inches (406 mm). Anchorage of the steel angle at every double stud spacing shall be not less than two $^7/_{16}$-inch-diameter (11 mm) by 4-inch (102 mm) lag screws for wood construction or two $^7/_{16}$-inch (11.1 mm) bolts with washers for cold-formed steel construction. The steel angle shall have a minimum clearance to underlying construction of $^1/_{16}$ inch (1.6 mm). Not less than two-thirds the width of the masonry veneer thickness shall bear on the steel angle. Flashing and weep holes shall be located in the masonry veneer in accordance with Figure R703.8.2.1. The maximum height of masonry veneer above the steel angle support shall be 12 feet 8 inches (3861 mm). The airspace separating the masonry veneer from the wood backing shall be in accordance with Sections R703.8.4 and R703.8.4.2. The method of support for the masonry veneer on wood construction shall be constructed in accordance with Figure R703.8.2.1

The maximum slope of the roof construction without stops shall be 7:12. Roof construction with slopes greater than 7:12 but not more than 12:12 shall have stops of a minimum 3-inch by 3-inch by $^1/_4$-inch (76 mm by 76 mm by 6.4 mm) steel plate welded to the angle at 24 inches (610 mm) on center along the angle or as *approved* by the *building official*.

R703.8.2.2 Support by roof construction. A steel angle shall be placed directly on top of the roof construction. The roof supporting construction for the steel angle shall consist of not fewer than three 2-inch by 6-inch (51 mm by 152 mm) wood members for wood construction or three 550S162 cold-formed steel members for cold-formed steel light frame construction. A wood member abutting the vertical wall stud construction shall be anchored with not fewer than three $^5/_8$-inch (15.9 mm) diameter by 5-inch (127 mm) lag screws to every wood

stud spacing. Each additional wood roof member shall be anchored by the use of two 10d nails at every wood stud spacing. A cold-formed steel member abutting the vertical wall stud shall be anchored with not fewer than nine No. 8 screws to every cold-formed steel stud. Each additional cold-formed steel roof member shall be anchored to the adjoining roof member using two No. 8 screws at every stud spacing. Not less than two-thirds the width of the masonry veneer thickness shall bear on the steel angle. Flashing and weep holes shall be located in the masonry veneer wythe in accordance with Figure R703.8.2.2. The maximum height of the masonry veneer above the steel angle support shall be 12 feet 8 inches (38.61 mm). The airspace separating the masonry veneer from the wood backing shall be in accordance with Sections R703.8.4 and R703.8.4.2. The support for the masonry veneer shall be constructed in accordance with Figure R703.8.2.2.

The maximum slope of the roof construction without stops shall be 7:12. Roof construction with slopes greater than 7:12 but not more than 12:12 shall have stops of a minimum 3-inch by 3-inch by $^1/_4$-inch (76 mm by 76 mm by 6.4 mm) steel plate welded to the angle at 24 inches (610 mm) on center along the angle or as *approved* by the *building official*.

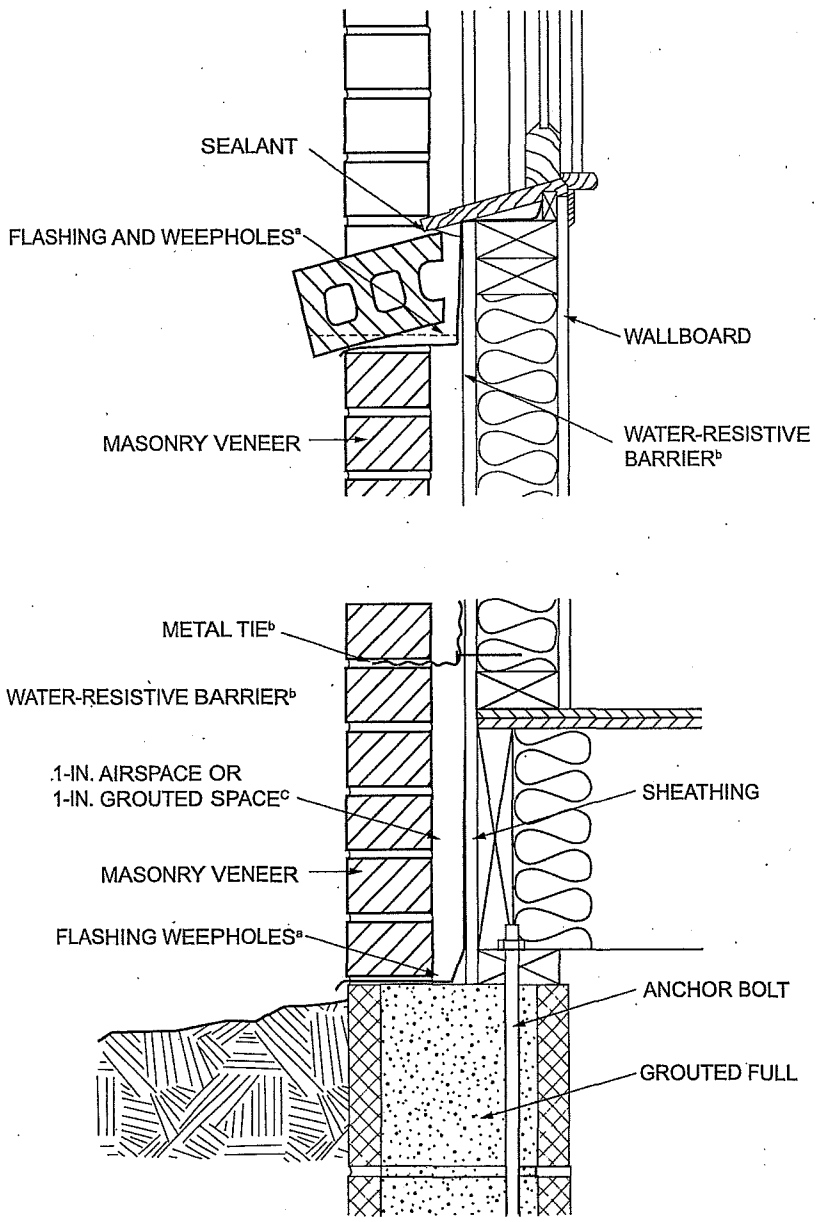

For SI: 1 inch = 24.5 mm.

FIGURE R703.8
TYPICAL MASONRY VENEER WALL DETAILS

(continued)

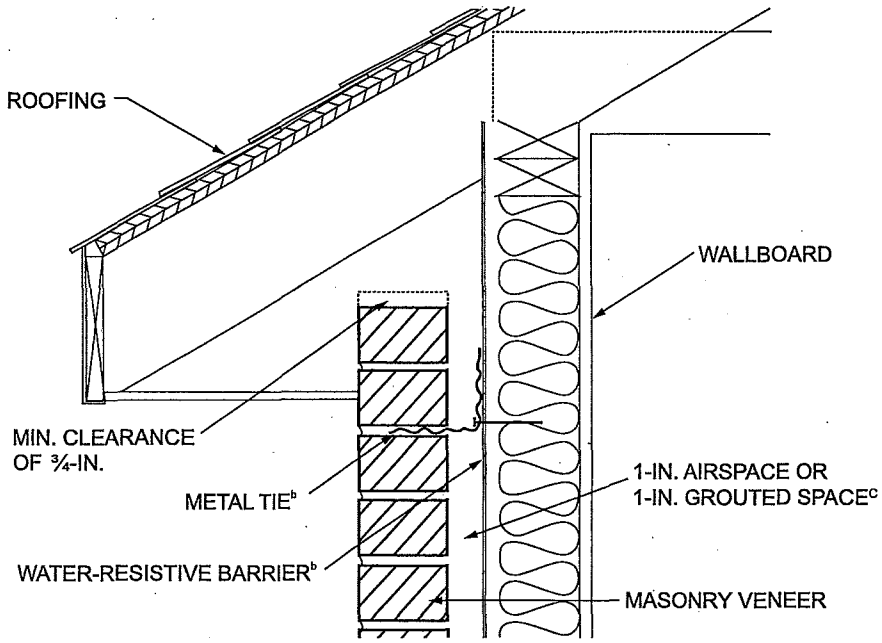

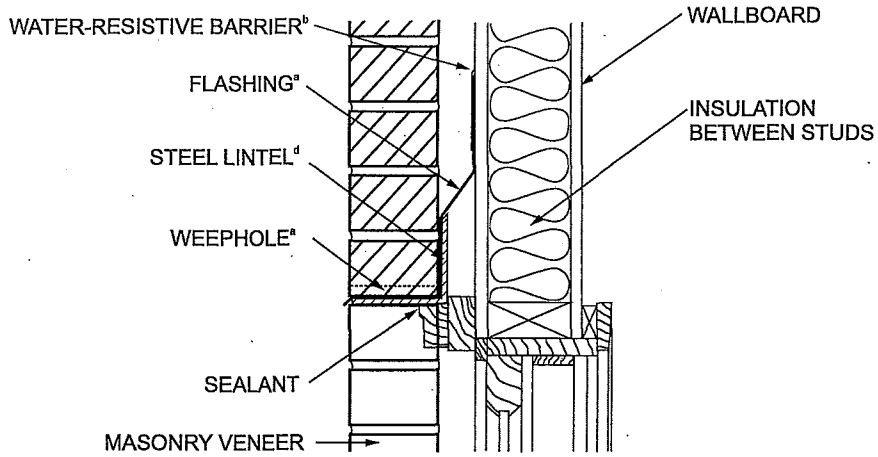

For SI: 1 inch = 25.4 mm.

a. See Sections R703.8.5, R703.8.6 and R703.4.

b. See Sections R703.2 and R703.8.4.

c. See Section R703.8.4.2 and Table R703.8.4.

d. See Section R703.8.3.

e. Figure R703.8 illustrates typical construction details for a masonry veneer wall. For the actual mandatory requirements of this code, see the indicated sections of text. Other details of masonry veneer wall construction shall be permitted provided the requirements of the indicated sections of text are met.

FIGURE R703.8—continued
TYPICAL MASONRY VENEER WALL DETAILS[e]

TABLE R703.8(1)
STONE OR MASONRY VENEER LIMITATIONS AND REQUIREMENTS, WOOD OR STEEL FRAMING, SEISMIC DESIGN CATEGORIES A, B AND C

SEISMIC DESIGN CATEGORY	NUMBER OF WOOD- OR STEEL-FRAMED STORIES	MAXIMUM HEIGHT OF VENEER ABOVE NONCOMBUSTIBLE FOUNDATION[a] (feet)	MAXIMUM NOMINAL THICKNESS OF VENEER (inches)	MAXIMUM WEIGHT OF VENEER (psf)[b]	WOOD- OR STEEL-FRAMED STORY
A or B	Steel: 1 or 2 Wood: 1, 2 or 3	30	5	50	all
C	1	30	5	50	1 only
	2	30	5	50	top
					bottom
	Wood only: 3	30	5	50	top
					middle
					bottom

For SI: 1 inch = 25.4 mm, 1 foot = 304.8 mm, 1 pound per square foot = 0.479 kPa.

a. An additional 8 feet is permitted for gable end walls. See also story height limitations of Section R301.3.

b. Maximum weight is installed weight and includes weight of mortar, grout, lath and other materials used for installation. Where veneer is placed on both faces of a wall, the combined weight shall not exceed that specified in this table.

TABLE R703.8(2)
STONE OR MASONRY VENEER LIMITATIONS AND REQUIREMENTS, ONE- AND TWO-FAMILY DETACHED DWELLINGS, SEISMIC DESIGN CATEGORIES D_0, D_1 AND D_2

SEISMIC DESIGN CATEGORY	NUMBER OF WOOD-FRAMED STORIES[a]	MAXIMUM HEIGHT OF VENEER ABOVE NONCOMBUSTIBLE FOUNDATION OR FOUNDATION WALL (feet)	MAXIMUM NOMINAL THICKNESS OF VENEER (inches)	MAXIMUM WEIGHT OF VENEER (psf)[b]
D_0	1	20[c]	4	40
	2	20[c]	4	40
	3	30[d]	4	40
D_1	1	20[c]	4	40
	2	20[c]	4	40
	3	20[c]	4	40
D_2	1	20[c]	3	30
	2	20[c]	3	30

For SI: 1 inch = 25.4 mm, 1 foot = 304.8 mm, 1 pound per square foot = 0.479 kPa, 1 pound-force = 4.448 N.

a. Cripple walls are not permitted in Seismic Design Categories D_0, D_1 and D_2.

b. Maximum weight is installed weight and includes weight of mortar, grout and lath, and other materials used for installation.

c. The veneer shall not exceed 20 feet in height above a noncombustible foundation, with an additional 8 feet permitted for gable end walls, or 30 feet in height with an additional 8 feet for gable end walls where the lower 10 feet have a backing of concrete or masonry wall. See story height limitations of Section R301.3.

d. The veneer shall not exceed 30 feet in height above a noncombustible foundation, with an additional 8 feet permitted for gable end walls. See story height limitations of Section R301.3.

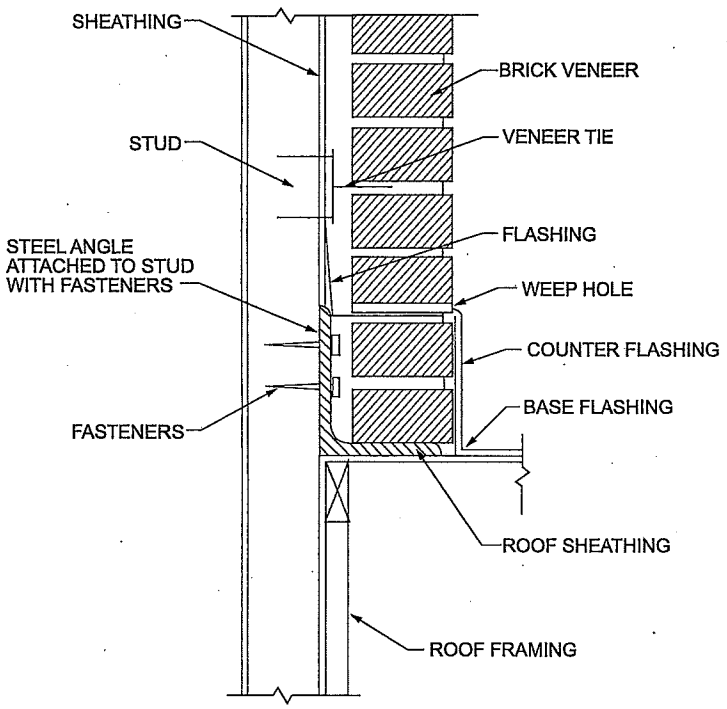

SUPPORT BY STEEL ANGLE

FIGURE R703.8.2.1
EXTERIOR MASONRY VENEER SUPPORT BY STEEL ANGLES

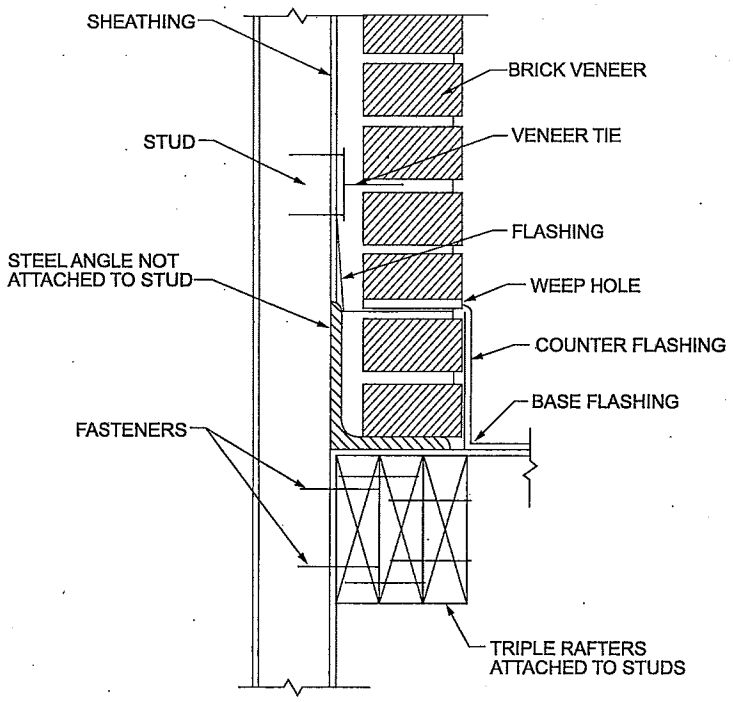

SUPPORT BY ROOF MEMBERS

FIGURE R703.8.2.2
EXTERIOR MASONRY VENEER SUPPORT BY ROOF MEMBERS

2822

R703.8.3 Lintels. Masonry veneer shall not support any vertical load other than the dead load of the veneer above. Veneer above openings shall be supported on lintels of noncombustible materials. The lintels shall have a length of bearing not less than 4 inches (102 mm). Steel lintels shall be shop coated with a rust-inhibitive paint, except for lintels made of corrosion-resistant steel or steel treated with coatings to provide corrosion resistance. Construction of openings shall comply with either Section R703.8.3.1 or 703.8.3.2.

R703.8.3.1 Allowable span. The allowable span shall not exceed the values set forth in Table R703.8.3.1.

R703.8.3.2 Maximum span. The allowable span shall not exceed 18 feet 3 inches (5562 mm) and shall be constructed to comply with Figure R703.8.3.2 and the following:

1. Provide a minimum length of 18 inches (457 mm) of masonry veneer on each side of opening as shown in Figure R703.8.3.2.
2. Provide a minimum 5-inch by $3^1/_2$-inch by $^5/_{16}$-inch (127 mm by 89 mm by 7.9 mm) steel angle above the opening and shore for a minimum of 7 days after installation.
3. Provide double-wire joint reinforcement extending 12 inches (305 mm) beyond each side of the opening. Lap splices of joint reinforcement not less than 12 inches (305 mm). Comply with one of the following:
   - 3.1. Double-wire joint reinforcement shall be $^3/_{16}$-inch (4.8 mm) diameter and shall be placed in the first two bed joints above the opening.
   - 3.2. Double-wire joint reinforcement shall be 9 gauge (0.144 inch or 3.66 mm diameter) and shall be placed in the first three bed joints above the opening.
4. Provide the height of masonry veneer above opening, in accordance with Table R703.8.3.2.

TABLE R703.8.3.2
HEIGHT OF MASONRY VENEER ABOVE OPENING

MINIMUM HEIGHT OF MASONRY VENEER ABOVE OPENING (INCH)	MAXIMUM HEIGHT OF MASONRY VENEER ABOVE OPENING (FEET)
13	< 5
24	5 to < 12
60	12 to height above support allowed by Section R703.8

For SI:1 inch = 25.4 mm, 1 foot = 304.8 mm.

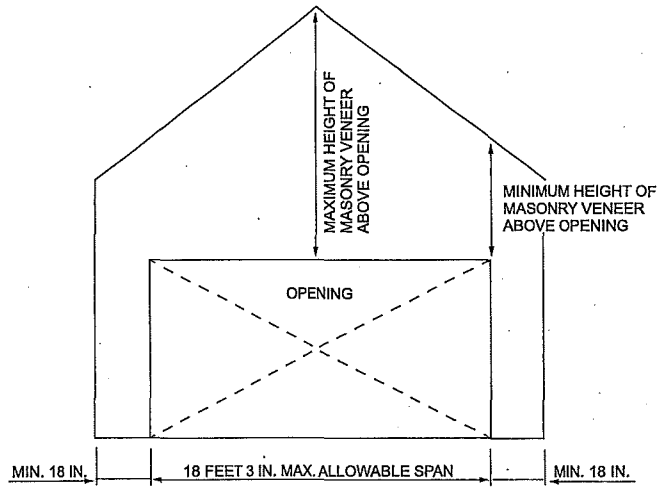

For SI: 1 inch = 25.4 mm, 1 foot = 304.8 mm.

FIGURE R703.8.3.2
MASONRY VENEER OPENING

R703.8.4 Anchorage. Masonry veneer shall be anchored to the supporting wall studs with corrosion-resistant metal ties embedded in mortar or grout and extending into the veneer a minimum of $1^1/_2$ inches (38 mm), with not less than $^5/_8$-inch (15.9 mm) mortar or grout cover to outside face. Masonry veneer shall conform to Table R703.8.4.

TABLE R703.8.3.1
ALLOWABLE SPANS FOR LINTELS SUPPORTING MASONRY VENEER[a, b, c, d]

SIZE OF STEEL ANGLE[a, c, d] (inches)	NO STORY ABOVE	ONE STORY ABOVE	TWO STORIES ABOVE	NO. OF $^1/_2$-INCH OR EQUIVALENT REINFORCING BARS IN REINFORCED LINTEL[b, d]
$3 \times 3 \times {}^1/_4$	6′-0″	4′-6″	3′-0″	1
$4 \times 3 \times {}^1/_4$	8′-0″	6′-0″	4′-6″	1
$5 \times 3^1/_2 \times {}^5/_{16}$	10′-0″	8′-0″	6′-0″	2
$6 \times 3^1/_2 \times {}^5/_{16}$	14′-0″	9′-6″	7′-0″	2
$2\text{-}6 \times 3^1/_2 \times {}^5/_{16}$	20′-0″	12′-0″	9′-6″	4

For SI: 1 inch = 25.4 mm, 1 foot = 304.8 mm.

a. Long leg of the angle shall be placed in a vertical position.

b. Depth of reinforced lintels shall be not less than 8 inches and all cells of hollow masonry lintels shall be grouted solid. Reinforcing bars shall extend not less than 8 inches into the support.

c. Steel members indicated are adequate typical examples; other steel members meeting structural design requirements shall be permitted to be used.

d. Either steel angle or reinforced lintel shall span opening.

TABLE R703.8.4
TIE ATTACHMENT AND AIRSPACE REQUIREMENTS

BACKING AND TIE	MINIMUM TIE	MINIMUM TIE FASTENER[a]	AIRSPACE	
Wood stud backing with corrugated sheet metal	22 U.S. gage (0.0299 in.) × $^7/_8$ in. wide	8d common nail [b] ($2^1/_2$ in. × 0.131 in.)	Nominal 1 in. between sheathing and veneer	
Wood stud backing with metal strand wire	W1.7 (No. 9 U.S. gage; 0.148 in.) with hook embedded in mortar joint	8d common nail [b] ($2^1/_2$ in. × 0.131 in.)	Minimum nominal 1 in. between sheathing and veneer	Maximum $4^1/_2$ in. between backing and veneer
Cold-formed steel stud backing with adjustable metal strand wire	W1.7 (No. 9 U.S. gage; 0.148 in.) with hook embedded in mortar joint	No. 10 screw extending through the steel framing a minimum of three exposed threads	Minimum nominal 1 in. between sheathing and veneer	Maximum $4^1/_2$ in. between backing and veneer

For SI: 1 inch = 25.4 mm.

a. In Seismic Design Category D_0, D_1 or D_2, the minimum tie fastener shall be an 8d ring-shank nail ($2^1/_2$ in. × 0.131 in.) or a No. 10 screw extending through the steel framing a minimum of three exposed threads.

b. All fasteners shall have rust-inhibitive coating suitable for the installation in which they are being used, or be manufactured from material not susceptible to corrosion.

R703.8.4.1 Size and spacing. Veneer ties, if strand wire, shall be not less in thickness than No. 9 U.S. gage [(0.148 inch) (4 mm)] wire and shall have a hook embedded in the mortar joint, or if sheet metal, shall be not less than No. 22 U.S. gage by [(0.0299 inch) (0.76 mm)] $^7/_8$ inch (22 mm) corrugated. Each tie shall support not more than 2.67 square feet (0.25 m^2) of wall area and shall be spaced not more than 32 inches (813 mm) on center horizontally and 24 inches (635 mm) on center vertically.

Exception: In Seismic Design Category D_0, D_1 or D_2 or townhouses in Seismic Design Category C or in wind areas of more than 30 pounds per square foot pressure (1.44 kPa), each tie shall support not more than 2 square feet (0.2 m^2) of wall area.

R703.8.4.1.1 Veneer ties around wall openings. Additional metal ties shall be provided around wall openings greater than 16 inches (406 mm) in either dimension. Metal ties around the perimeter of openings shall be spaced not more than 3 feet (9144 mm) on center and placed within 12 inches (305 mm) of the wall opening.

R703.8.4.2 Grout fill. As an alternative to the airspace required by Table R703.8.4, grout shall be permitted to fill the airspace. Where the airspace is filled with grout, a water-resistive barrier is required over studs or sheathing. Where the airspace is filled, replacing the sheathing and water-resistive barrier with a wire mesh and *approved* water-resistive barrier or an *approved* water-resistive barrier-backed reinforcement attached directly to the studs is permitted.

R703.8.5 Flashing. Flashing shall be located beneath the first course of masonry above finished ground level above the foundation wall or slab and at other points of support, including structural floors, shelf angles and lintels where masonry veneers are designed in accordance with Section R703.8. See Section R703.4 for additional requirements.

R703.8.6 Weepholes. Weepholes shall be provided in the outside wythe of masonry walls at a maximum spacing of 33 inches (838 mm) on center. Weepholes shall be not less than $^3/_{16}$ inch (5 mm) in diameter. Weepholes shall be located immediately above the flashing.

R703.9 Exterior insulation and finish system (EIFS)/EIFS with drainage. Exterior insulation and finish systems (EIFS) shall comply with this chapter and Section R703.9.1. EIFS with drainage shall comply with this chapter and Section R703.9.2.

R703.9.1 Exterior insulation and finish systems (EIFS). EIFS shall comply with the following:

1. ASTM E 2568.
2. EIFS shall be limited to applications over substrates of concrete or masonry wall assemblies.
3. Flashing of EIFS shall be provided in accordance with the requirements of Section R703.8.
4. EIFS shall be installed in accordance with the manufacturer's instructions.
5. EIFS shall terminate not less than 6 inches (152 mm) above the finished ground level.
6. Decorative trim shall not be face-nailed through the EIFS.

R703.9.2 Exterior insulation and finish system (EIFS) with drainage. EIFS with drainage shall comply with the following:

1. ASTM E 2568.
2. EIFS with drainage shall be required over all wall assemblies with the exception of substrates of concrete or masonry wall assemblies.
3. EIFS with drainage shall have an average minimum drainage efficiency of 90 percent when tested in accordance with ASTM E 2273.
4. The water-resistive barrier shall comply with Section R703.2 or ASTM E 2570.
5. The water-resistive barrier shall be applied between the EIFS and the wall sheathing.
6. Flashing of EIFS with drainage shall be provided in accordance with the requirements of Section R703.8.
7. EIFS with drainage shall be installed in accordance with the manufacturer's instructions.
8. EIFS with drainage shall terminate not less than 6 inches (152 mm) above the finished ground level.
9. Decorative trim shall not be face-nailed through the EIFS with drainage.

R703.10 Fiber cement siding.

R703.10.1 Panel siding. Fiber-cement panels shall comply with the requirements of ASTM C 1186, Type A, minimum Grade II or ISO 8336, Category A, minimum Class 2. Pan-

els shall be installed with the long dimension either parallel or perpendicular to framing. Vertical and horizontal joints shall occur over framing members and shall be protected with caulking, or with battens or flashing, or be vertical or horizontal shiplap, or otherwise designed to comply with Section R703.1. Panel siding shall be installed with fasteners in accordance with Table R703.3(1) or the approved manufacturer's instructions.

R703.10.2 Lap siding. Fiber-cement lap siding having a maximum width of 12 inches (305 mm) shall comply with the requirements of ASTM C 1186, Type A, minimum Grade II or ISO 8336, Category A, minimum Class 2. Lap siding shall be lapped a minimum of $1^1/_4$ inches (32 mm) and lap siding not having tongue-and-groove end joints shall have the ends protected with caulking, covered with an H-section joint cover, located over a strip of flashing, or shall be designed to comply with Section R703.1. Lap siding courses shall be installed with the fastener heads exposed or concealed, in accordance with Table R703.3(1) or approved manufacturer's instructions.

R703.11 Vinyl siding. Vinyl siding shall be certified and *labeled* as conforming to the requirements of ASTM D 3679 by an *approved* quality control agency.

R703.11.1 Installation. Vinyl siding, soffit and accessories shall be installed in accordance with the manufacturer's instructions.

R703.11.1.1 Fasteners. Unless specified otherwise by the manufacturer's instructions, fasteners for vinyl siding shall be 0.120-inch (3 mm) shank diameter nail with a 0.313-inch (8 mm) head or 16-gage staple with a $^3/_8$-inch (9.5 mm) to $^1/_2$-inch (12.7 mm) crown.

R703.11.1.2 Penetration depth. Unless specified otherwise by the manufacturer's instructions, fasteners shall penetrate into building framing. The total penetration into sheathing, furring framing or other nailable substrate shall be a minimum $1^1/_4$ inches (32 mm). Where specified by the manufacturer's instructions and supported by a test report, fasteners are permitted to penetrate into or fully through nailable sheathing or other nailable substrate of minimum thickness specified by the instructions or test report without penetrating into framing. Where the fastener penetrates fully through the sheathing, the end of the fastener shall extend a minimum of $^1/_4$ inch (6.4 mm) beyond the opposite face of the sheathing or nailable substrate.

R703.11.1.3 Spacing. Unless specified otherwise by the manufacturer's instructions, the maximum spacing between fasteners for horizontal siding shall be 16 inches (406 mm), and for vertical siding 12 inches (305 mm) both horizontally and vertically. Where specified by the manufacturer's instructions and supported by a test report, greater fastener spacing is permitted.

R703.11.1.4 Vinyl soffit panels. Soffit panels shall be individually fastened to a supporting component such as a nailing strip, fascia or subfascia component or as specified by the manufacturer's instructions.

R703.11.2 Foam plastic sheathing. Vinyl siding and insulated vinyl siding used with foam plastic sheathing shall be installed in accordance with Section R703.11.2.1, R703.11.2.2 or R703.11.2.3.

Exception: Where the foam plastic sheathing is applied directly over wood structural panels, fiberboard, gypsum sheathing or other *approved* backing capable of independently resisting the design wind pressure, the vinyl siding shall be installed in accordance with Section R703.11.1.

R703.11.2.1 Basic wind speed not exceeding 115 miles per hour and Exposure Category B. Where the ultimate design wind speed does not exceed 115 miles per hour (51 m/s), the exposure category is B and gypsum board, gypsum panel product or equivalent is installed on the side of the wall opposite the foam plastic sheathing, the minimum siding fastener penetration into wood framing shall be $1^1/_4$ inches (32 mm) using minimum 0.120-inch-diameter (3 mm) nail (shank) with a minimum 0.313-inch-diameter head, 16 inches (406 mm) on center. The foam plastic sheathing shall be minimum $^1/_2$-inch-thick (12.7 mm) (nominal) extruded polystyrene in accordance with ASTM C 578, $^1/_2$-inch-thick (12.7 mm) (nominal) polyisocyanurate in accordance with ASTM C 1289 or 1-inch-thick (25 mm) (nominal) expanded polystyrene in accordance with ASTM C 578.

R703.11.2.2 Basic wind speed exceeding 115 miles per hour or Exposure Categories C and D. Where the ultimate design wind speed exceeds 115 miles per hour (51 m/s), the exposure category is C or D, or all conditions of Section R703.11.2.1 are not met, the adjusted design pressure rating for the assembly shall meet or exceed the loads listed in Table R301.2(2) adjusted for height and exposure using Table R301.2(3). The design wind pressure rating of the vinyl siding for installation over solid sheathing as provided in the vinyl siding manufacturer's product specifications shall be adjusted for the following wall assembly conditions:

1. For wall assemblies with foam plastic sheathing on the exterior side and gypsum wall board, gypsum panel product or equivalent on the interior side of the wall, the vinyl siding's design wind pressure rating shall be multiplied by 0.39.
2. For wall assemblies with foam plastic sheathing on the exterior side and without gypsum wall board, gypsum panel product or equivalent on the interior side of wall, the vinyl siding's design wind pressure rating shall be multiplied by 0.27.

R703.11.2.3 Manufacturer specification. Where the vinyl siding manufacturer's product specifications provide an *approved* design wind pressure rating for installation over foam plastic sheathing, use of this design wind pressure rating shall be permitted and the siding shall be installed in accordance with the manufacturer's instructions.

R703.12 Adhered masonry veneer installation. Adhered masonry veneer shall comply with the requirements of Section R703.7.3 and the requirements in Sections 12.1 and 12.3 of TMS 402/ACI 530/ASCE 5. Adhered masonry veneer shall be installed in accordance with Section R703.7.1, Article 3.3C of TMS 602/ACI 530.1/ASCE 6 or the manufacturer's instructions.

R703.12.1 Clearances. On exterior stud walls, adhered masonry veneer shall be installed:

1. Minimum of 4 inches (102 mm) above the earth;
2. Minimum of 2 inches (51 mm) above paved areas; or
3. Minimum of $^1/_2$ inch (12.7 mm) above exterior walking surfaces that are supported by the same foundation that supports the exterior wall.

R703.12.2 Flashing at foundation. A corrosion-resistant screed or flashing of a minimum 0.019-inch (0.48 mm) or 26-gage galvanized or plastic with a minimum vertical attachment flange of $3^1/_2$ inches (89 mm) shall be installed to extend a minimum of 1 inch (25 mm) below the foundation plate line on exterior stud walls in accordance with Section R703.4.

R703.12.3 Water-resistive barrier. A water-resistive barrier shall be installed as required by Section R703.2 and shall comply with the requirements of Section R703.6.3. The water-resistive barrier shall lap over the exterior of the attachment flange of the screed or flashing provided in accordance with Section R703.12.2.

R703.13 Insulated vinyl siding. Insulated vinyl siding shall be certified and labeled as conforming to the requirements of ASTM D 7793 by an approved quality control agency.

R703.13.1 Insulated vinyl siding and accessories. Insulated vinyl siding and accessories shall be installed in accordance with manufacturer's instructions.

R703.14 Polypropylene siding. Polypropylene siding shall be certified and labeled as conforming to the requirements of ASTM D 7254 by an approved quality control agency.

R703.14.1 Polypropylene siding and accessories. Polypropylene siding and accessories shall be installed in accordance with manufacturer's installation instructions.

R703.14.1.1 Installation. Polypropylene siding shall be installed over and attached to wood structural panel sheathing with minimum thickness of $^7/_{16}$ inch (11.1 mm), or other substrate, composed of wood or wood-based material and fasteners having equivalent withdrawal resistance.

R703.14.1.2 Fastener requirements. Unless otherwise specified in the approved manufacturer's instructions, nails shall be corrosion resistant, with a minimum 0.120-inch (3 mm) shank and minimum 0.313-inch (8 mm) head diameter. Nails shall be a minimum of $1^1/_4$ inches (32 mm) long or as necessary to penetrate sheathing or substrate not less than $^3/_4$ inch (19.1 mm). Where the nail fully penetrates the sheathing or nailable substrate, the end of the fastener shall extend not less than $^1/_4$ inch (6.4 mm) beyond the opposite face of the sheathing or substrate. Staples are not permitted.

R703.14.2 Fire separation. Polypropylene siding shall not be installed on walls with a fire separation distance of less than 5 feet (1524 mm) and walls closer than 10 feet (3048 mm) to a building on another lot.

Exception: Walls perpendicular to the line used to determine the fire separation distance.

R703.15 Cladding attachment over foam sheathing to wood framing. Cladding shall be specified and installed in accordance with Section R703, the cladding manufacturer's approved instructions, including any limitations for use over foam plastic sheathing, or an approved design. In addition, the cladding or furring attachments through foam sheathing to framing shall meet or exceed the minimum fastening requirements of Section R703.15.1, Section R703.15.2, or an approved design for support of cladding weight.

Exceptions:

1. Where the cladding manufacturer has provided approved installation instructions for application over foam sheathing, those requirements shall apply.
2. For exterior insulation and finish systems, refer to Section R703.9.
3. For anchored masonry or stone veneer installed over foam sheathing, refer to Section R703.7.

R703.15.1 Direct attachment. Where cladding is installed directly over foam sheathing without the use of furring, cladding minimum fastening requirements to support the cladding weight shall be as specified in Table R703.15.1.

R703.15.2 Furred cladding attachment. Where wood furring is used to attach cladding over foam sheathing, furring minimum fastening requirements to support the cladding weight shall be as specified in Table R703.15.2. Where placed horizontally, wood furring shall be preservative-treated wood in accordance with Section R317.1 or naturally durable wood and fasteners shall be corrosion resistant in accordance Section R317.3.

R703.16 Cladding attachment over foam sheathing to cold-formed steel framing. Cladding shall be specified and installed in accordance with Section R703, the cladding manufacturer's approved instructions, including any limitations for use over foam plastic sheathing, or an approved design. In addition, the cladding or furring attachments through foam sheathing to framing shall meet or exceed the minimum fastening requirements of Section R703.16.1, Section R703.16.2 or an approved design for support of cladding weight.

Exceptions:

1. Where the cladding manufacturer has provided approved installation instructions for application over foam sheathing, those requirements shall apply.
2. For exterior insulation and finish systems, refer to Section R703.9.
3. For anchored masonry or stone veneer installed over foam sheathing, refer to Section R703.7.

TABLE R703.15.1
CLADDING MINIMUM FASTENING REQUIREMENTS FOR DIRECT ATTACHMENT OVER FOAM PLASTIC SHEATHING TO SUPPORT CLADDING WEIGHT[a]

CLADDING FASTENER THROUGH FOAD SHEATHING	CLADDING FASTENER TYPE AND MINIMUM SIZE[b]	CLADDING FASTENER VERTICAL SPACING (inches)	MAXIMUM THICKNESS OF FOAM SHEATHING[c] (inches)					
			16″ o.c. Fastener Horizontal Spacing			24″ o.c. Fastener Horizontal Spacing		
			Cladding Weight:			Cladding Weight:		
			3 psf	11 psf	25 psf	3 psf	11 psf	25 psf
Wood Framing (minimum $1^1/_4$-inch penetration)	0.113″ diameter nail	6	2	1	DR	2	0.75	DR
		8	2	1	DR	2	0.5	DR
		12	2	0.5	DR	2	DR	DR
	0.120″ diameter nail	6	3	1.5	0.5	3	0.75	DR
		8	3	1	DR	3	0.5	DR
		12	3	0.5	DR	2	DR	DR
	0.131″ diameter nail	6	4	2	0.75	4	1	DR
		8	4	1.5	0.5	4	0.75	DR
		12	4	0.75	DR	2	0.5	DR
	0.162″ diameter nail	6	4	4	1.5	4	2	1
		8	4	3	1	4	1.5	0.75
		12	4	2	0.75	4	1	DR

For SI: 1 inch = 25.4 mm, 1 pound per square foot = 0.0479 kPa, 1 pound per square inch = 6.895 kPa.
DR = Design required.
o.c. = on center
a. Wood framing shall be Spruce-pine-fir or any wood species with a specific gravity of 0.42 or greater in accordance with AWC NDS.
b. Nail fasteners shall comply with ASTM F 1667, except nail length shall be permitted to exceed ASTM F 1667 standard lengths.
c. Foam sheathing shall have a minimum compressive strength of 15 psi in accordance with ASTM C 578 or ASTM C 1289.

TABLE R703.15.2
FURRING MINIMUM FASTENING REQUIREMENTS FOR APPLICATION OVER FOAM PLASTIC SHEATHING TO SUPPORT CLADDING WEIGHT[a, b]

FURRING MATERIAL	FRAMING MEMBER	FASTENER TYPE AND MINIMUM SIZE	MINIMUM PENETRATION INTO WALL FRAMING (inches)	FASTENER SPACING IN FURRING (inches)	MAXIMUM THICKNESS OF FOAM SHEATHING[d] (inches)					
					16″ o.c. Furring[e]			24″ o.c. Furring[e]		
					Siding Weight:			Siding Weight:		
					3 psf	11 psf	25 psf	3 psf	11 psf	25 psf
Minimum 1× Wood Furring[c]	Minimum 2× Wood Stud	0.131″ diameter nail	$1^1/_4$	8	4	2	1	4	1.5	DR
				12	4	1.5	DR	3	1	DR
				16	4	1	DR	3	0.5	DR
		0.162″ diameter nail	$1^1/_4$	8	4	4	1.5	4	2	0.75
				12	4	2	0.75	4	1.5	DR
				16	4	1.5	DR	4	1	DR
		No.10 wood screw	1	12	4	2	0.75	4	1.5	DR
				16	4	1.5	DR	4	1	DR
				24	4	1	DR	3	DR	DR
		$^1/_4$″ lag screw	$1^1/_2$	12	4	3	1	4	2	0.5
				16	4	1.5	DR	4	1.5	DR
				24	4	1.5	DR	4	0.75	DR

For SI: 1 inch = 25.4 mm, 1 pound per square foot = 0.0479 kPa, 1 pound per square inch = 6.895 kPa.
DR = Design required.
o.c. = on center
a. Wood framing and furring shall be Spruce-pine-fir or any wood species with a specific gravity of 0.42 or greater in accordance with AWC NDS.
b. Nail fasteners shall comply with ASTM F 1667, except nail length shall be permitted to exceed ASTM F 1667 standard lengths.
c. Where the required cladding fastener penetration into wood material exceeds $^3/_4$ inch and is not more than $1^1/_2$ inches, a minimum 2× wood furring or an approved design shall be used.
d. Foam sheathing shall have a minimum compressive strength of 15 psi in accordance with ASTM C 578 or ASTM C 1289.
e. Furring shall be spaced not more than 24 inches on center, in a vertical or horizontal orientation. In a vertical orientation, furring shall be located over wall studs and attached with the required fastener spacing. In a horizontal orientation, the indicated 8-inch and 12-inch fastener spacing in furring shall be achieved by use of two fasteners into studs at 16 inches and 24 inches on center, respectively.

R703.16.1 Direct attachment. Where cladding is installed directly over foam sheathing without the use of furring, cladding minimum fastening requirements to support the cladding weight shall be as specified in Table R703.16.1.

R703.16.2 Furred cladding attachment. Where steel or wood furring is used to attach cladding over foam sheathing, furring minimum fastening requirements to support the cladding weight shall be as specified in Table R703.16.2. Where placed horizontally, wood furring shall be preservative-treated wood in accordance with Section R317.1 or naturally durable wood and fasteners shall be corrosion resistant in accordance with Section R317.3. Steel furring shall have a minimum G60 galvanized coating.

R703.17 Cladding attachment over foam sheathing to masonry or concrete wall construction. Cladding shall be specified and installed in accordance with Section 703.3 and the cladding manufacturer's instructions or an approved design. Foam sheathing shall be attached to masonry or concrete construction in accordance with the insulation manufacturer's installation instructions or an approved design. Furring and furring attachments through foam sheathing into concrete or masonry substrate shall be designed to resist design loads determined in accordance with Section R301, including support of cladding weight as applicable. Fasteners used to attach cladding or furring through foam sheathing to masonry or concrete substrates shall be approved for application into masonry or concrete material and shall be installed in accordance with the fastener manufacturer's instructions.

Exceptions:

1. Where the cladding manufacturer has provided approved installation instructions for application over foam sheathing and connection to a masonry or concrete substrate, those requirements shall apply.
2. For exterior insulation and finish systems, refer to Section R703.9.
3. For anchored masonry or stone veneer installed over foam sheathing, refer to Section R703.7

TABLE R703.16.1
CLADDING MINIMUM FASTENING REQUIREMENTS FOR DIRECT ATTACHMENT OVER FOAM PLASTIC SHEATHING TO SUPPORT CLADDING WEIGHT[a]

CLADDING FASTENER THROUGH FOAM SHEATHING INTO:	CLADDING FASTENER TYPE AND MINIMUM SIZE[b]	CLADDING FASTENER VERTICAL SPACING (inches)	MAXIMUM THICKNESS OF FOAM SHEATHING[c] (inches)					
			16" o.c. Fastener Horizontal Spacing			24" o.c. Fastener Horizontal Spacing		
			Cladding Weight:			Cladding Weight:		
			3 psf	11 psf	25 psf	3 psf	11 psf	25 psf
Steel Framing (minimum penetration of steel thickness + 3 threads)	No. 8 screw into 33 mil steel or thicker	6	3	3	1.5	3	2	DR
		8	3	2	0.5	3	1.5	DR
		12	3	1.5	DR	3	0.75	DR
	No. 10 screw into 33 mil steel	6	4	3	2	4	3	0.5
		8	4	3	1	4	2	DR
		12	4	2	DR	3	1	DR
	No. 10 screw into 43 mil steel or thicker	6	4	4	3	4	4	2
		8	4	4	2	4	3	1.5
		12	4	3	1.5	4	3	DR

For SI: 1 inch = 25.4 mm, 1 mil = 0.0254 mm, 1 pound per square foot = 0.0479 kPa, 1 pound per square inch = 6.895 kPa.
DR = Design required.
o.c. = on center
a. Steel framing shall be minimum 33 ksi steel for 33 mil and 43 mil steel, and 50 ksi steel for 54 mil steel or thicker.
b. Screws shall comply with the requirements of ASTM C 1513.
c. Foam sheathing shall have a minimum compressive strength of 15 psi in accordance with ASTM C 578 or ASTM C 1289.

TABLE R703.16.2
FURRING MINIMUM FASTENING REQUIREMENTS FOR APPLICATION OVER FOAM PLASTIC SHEATHING TO SUPPORT CLADDING WEIGHT[a]

FURRING MATERIAL	FRAMING MEMBER	FASTENER TYPE AND MINIMUM SIZE[b]	MINIMUM PENETRATION INTO WALL FRAMING (inches)	FASTENER SPACING IN FURRING (inches)	MAXIMUM THICKNESS OF FOAM SHEATHING[d] (inches)					
					16″ o.c. Furring[e]			24″ o.c. Furring[e]		
					Cladding Weight:			Cladding Weight:		
					3 psf	11 psf	25 psf	3 psf	11 psf	25 psf
Minimum 33 mil Steel Furring or Minimum 1× Wood Furring[c]	33 mil Steel Stud	No. 8 screw	Steel thickness + 3 threads	12	3	1.5	DR	3	0.5	DR
				16	3	1	DR	2	DR	DR
				24	2	DR	DR	2	DR	DR
		No. 10 screw	Steel thickness + 3 threads	12	4	2	DR	4	1	DR
				16	4	1.5	DR	3	DR	DR
				24	3	DR	DR	2	DR	DR
	43 mil or thicker Steel Stud	No. 8 Screw	Steel thickness + 3 threads	12	3	1.5	DR	3	0.5	DR
				16	3	1	DR	2	DR	DR
				24	2	DR	DR	2	DR	DR
		No. 10 screw	Steel thickness + 3 threads	12	4	3	1.5	4	3	DR
				16	4	3	0.5	4	2	DR
				24	4	2	DR	4	0.5	DR

For SI: 1 inch = 25.4 mm, 1 mil = 0.0254 mm, 1 pound per square foot = 0.0479 kPa, 1 pound per square inch = 6.895 kPa.

DR = Design required.

o.c. = on center

a. Wood furring shall be Spruce-pine-fir or any softwood species with a specific gravity of 0.42 or greater. Steel furring shall be minimum 33 ksi steel. Steel studs shall be minimum 33 ksi steel for 33mil and 43 mil thickness, and 50 ksi steel for 54 mil steel or thicker.

b. Screws shall comply with the requirements of ASTM C 1513.

c. Where the required cladding fastener penetration into wood material exceeds $^3/_4$ inch and is not more than $1^1/_2$ inches, a minimum 2-inch nominal wood furring or an approved design shall be used.

d. Foam sheathing shall have a minimum compressive strength of 15 psi in accordance with ASTM C 578 or ASTM C 1289.

e. Furring shall be spaced not more than 24 inches (610 mm) on center, in a vertical or horizontal orientation. In a vertical orientation, furring shall be located over wall studs and attached with the required fastener spacing. In a horizontal orientation, the indicated 8-inch and 12-inch fastener spacing in furring shall be achieved by use of two fasteners into studs at 16 inches and 24 inches on center, respectively.

CHAPTER 8

ROOF-CEILING CONSTRUCTION

SECTION R801
GENERAL

R801.1 Application. The provisions of this chapter shall control the design and construction of the roof-ceiling system for buildings.

R801.2 Requirements. Roof and ceiling construction shall be capable of accommodating all loads imposed in accordance with Section R301 and of transmitting the resulting loads to the supporting structural elements.

R801.3 Roof drainage. In areas where expansive or collapsible soils are known to exist, all *dwellings* shall have a controlled method of water disposal from roofs that will collect and discharge roof drainage to the ground surface not less than 5 feet (1524 mm) from foundation walls or to an *approved* drainage system.

SECTION R802
WOOD ROOF FRAMING

R802.1 General. Wood and wood-based products used for load-supporting purposes shall conform to the applicable provisions of this section.

R802.1.1 Sawn lumber. Sawn lumber shall be identified by a grade mark of an accredited lumber grading or inspection agency and have design values certified by an accreditation body that complies with DOC PS 20. In lieu of a grade mark, a certificate of inspection issued by a lumber grading or inspection agency meeting the requirements of this section shall be accepted.

R802.1.1.1 End-jointed lumber. *Approved* end-jointed lumber identified by a grade mark conforming to Section R802.1 shall be permitted to be used interchangeably with solid-sawn members of the same species and grade. End-jointed lumber used in an assembly required elsewhere in this code to have a fire-resistance rating shall have the designation "Heat-Resistant Adhesive" or "HRA" included in its grade mark.

R802.1.2 Structural glued laminated timbers. Glued laminated timbers shall be manufactured and identified as required in ANSI/AITC A190.1 and ASTM D 3737.

R802.1.3 Structural log members. Structural log members shall comply with the provisions of ICC 400.

R802.1.4 Structural composite lumber. Structural capacities for structural composite lumber shall be established and monitored in accordance with ASTM D 5456.

R802.1.5 Fire-retardant-treated wood. Fire-retardant-treated wood (FRTW) is any wood product that, when impregnated with chemicals by a pressure process or other means during manufacture, shall have, when tested in accordance with ASTM E 84 or UL 723, a listed flame spread index of 25 or less and shows no evidence of significant progressive combustion where the test is continued for an additional 20-minute period. In addition, the flame front shall not progress more than 10.5 feet (3200 mm) beyond the center line of the burners at any time during the test.

R802.1.5.1 Pressure process. For wood products impregnated with chemicals by a pressure process, the process shall be performed in closed vessels under pressures not less than 50 pounds per square inch gauge (psig) (344.7 kPa).

R802.1.5.2 Other means during manufacture. For wood products produced by other means during manufacture the treatment shall be an integral part of the manufacturing process of the wood product. The treatment shall provide permanent protection to all surfaces of the wood product.

R802.1.5.3 Testing. For wood products produced by other means during manufacture, other than a pressure process, all sides of the wood product shall be tested in accordance with and produce the results required in Section R802.1.3. Testing of only the front and back faces of wood structural panels shall be permitted.

R802.1.5.4 Labeling. Fire-retardant-treated lumber and wood structural panels shall be *labeled.* The *label* shall contain:

1. The identification *mark* of an *approved agency* in accordance with Section 1703.5 of the *International Building Code.*
2. Identification of the treating manufacturer.
3. The name of the fire-retardant treatment.
4. The species of wood treated.
5. Flame spread index and smoke-developed index.
6. Method of drying after treatment.
7. Conformance to applicable standards in accordance with Sections R802.1.5.5 through R802.1.5.10.
8. For FRTW exposed to weather, or a damp or wet location, the words "No increase in the listed classification when subjected to the Standard Rain Test" (ASTM D 2898).

R802.1.5.5 Strength adjustments. Design values for untreated lumber and wood structural panels as specified in Section R802.1 shall be adjusted for fire-retardant-treated wood. Adjustments to design values shall be based upon an *approved* method of investigation that takes into consideration the effects of the anticipated temperature and humidity to which the fire-retardant-treated wood will be subjected, the type of treatment and redrying procedures.

R802.1.5.6 Wood structural panels. The effect of treatment and the method of redrying after treatment, and exposure to high temperatures and high humidities on the flexure properties of fire-retardant-treated softwood plywood shall be determined in accordance with ASTM D 5516. The test data developed by ASTM D 5516 shall be used to develop adjustment factors, maximum loads and spans, or both for untreated plywood design values in accordance with ASTM D 6305. Each manufacturer shall publish the allowable maximum loads and spans for service as floor and roof sheathing for their treatment.

R802.1.5.7 Lumber. For each species of wood treated, the effect of the treatment and the method of redrying after treatment and exposure to high temperatures and high humidities on the allowable design properties of fire-retardant-treated lumber shall be determined in accordance with ASTM D 5664. The test data developed by ASTM D 5664 shall be used to develop modification factors for use at or near room temperature and at elevated temperatures and humidity in accordance with ASTM D 6841. Each manufacturer shall publish the modification factors for service at temperatures of not less than 80°F (27°C) and for roof framing. The roof framing modification factors shall take into consideration the climatological location.

R802.1.5.8 Exposure to weather. Where fire-retardant-treated wood is exposed to weather or damp or wet locations, it shall be identified as "Exterior" to indicate there is not an increase in the listed flame spread index as defined in Section R802.1.5 when subjected to ASTM D 2898.

R802.1.5.9 Interior applications. Interior fire-retardant-treated wood shall have a moisture content of not over 28 percent when tested in accordance with ASTM D 3201 procedures at 92 percent relative humidity. Interior fire-retardant-treated wood shall be tested in accordance with Section R802.1.5.6 or R802.1.5.7. Interior fire-retardant-treated wood designated as Type A shall be tested in accordance with the provisions of this section.

R802.1.5.10 Moisture content. Fire-retardant-treated wood shall be dried to a moisture content of 19 percent or less for lumber and 15 percent or less for wood structural panels before use. For wood kiln dried after treatment (KDAT) the kiln temperatures shall not exceed those used in kiln drying the lumber and plywood submitted for the tests described in Section R802.1.5.6 for plywood and R802.1.5.7 for lumber.

R802.1.6 Cross-laminated timber. Cross-laminated timber shall be manufactured and identified as required by ANSI/APA PRG 320.

R802.1.7 Engineered wood rim board. Engineered wood rim boards shall conform to ANSI/APA PRR 410 or shall be evaluated in accordance with ASTM D 7672. Structural capacities shall be in accordance with ANSI/APA PRR 410 or established in accordance with ASTM D 7672. Rim boards conforming to ANSI/APA PRR 410 shall be marked in accordance with that standard.

R802.2 Design and construction. The framing details required in Section R802 apply to roofs having a minimum slope of three units vertical in 12 units horizontal (25-percent slope) or greater. Roof-ceilings shall be designed and constructed in accordance with the provisions of this chapter and Figures R606.11(1), R606.11(2) and R606.11(3) or in accordance with AWC NDS. Components of roof-ceilings shall be fastened in accordance with Table R602.3(1).

R802.3 Framing details. Rafters shall be framed not more than $1^1/_2$-inch (38 mm) offset from each other to ridge board or directly opposite from each other with a gusset plate as a tie. Ridge board shall be not less than 1-inch (25 mm) nominal thickness and not less in depth than the cut end of the rafter. At valleys and hips there shall be a valley or hip rafter not less than 2-inch (51 mm) nominal thickness and not less in depth than the cut end of the rafter. Hip and valley rafters shall be supported at the ridge by a brace to a bearing partition or be designed to carry and distribute the specific load at that point. Where the roof pitch is less than three units vertical in 12 units horizontal (25-percent slope), structural members that support rafters and ceiling joists, such as ridge beams, hips and valleys, shall be designed as beams.

R802.3.1 Ceiling joist and rafter connections. Ceiling joists and rafters shall be nailed to each other in accordance with Table R802.5.1(9), and the rafter shall be nailed to the top wall plate in accordance with Table R602.3(1). Ceiling joists shall be continuous or securely joined in accordance with Table R802.5.1(9) where they meet over interior partitions and are nailed to adjacent rafters to provide a continuous tie across the building where such joists are parallel to the rafters.

Where ceiling joists are not connected to the rafters at the top wall plate, joists connected higher in the *attic* shall be installed as rafter ties, or rafter ties shall be installed to provide a continuous tie. Where ceiling joists are not parallel to rafters, rafter ties shall be installed. Rafter ties shall be not less than 2 inches by 4 inches (51 mm by 102 mm) (nominal), installed in accordance with the connection requirements in Table R802.5.1(9), or connections of equivalent capacities shall be provided. Where ceiling joists or rafter ties are not provided, the ridge formed by these rafters shall be supported by a wall or girder designed in accordance with accepted engineering practice.

Collar ties or ridge straps to resist wind uplift shall be connected in the upper third of the *attic* space in accordance with Table R602.3(1).

Collar ties shall be not less than 1 inch by 4 inches (25 mm by 102 mm) (nominal), spaced not more than 4 feet (1219 mm) on center.

R802.3.2 Ceiling joists lapped. Ends of ceiling joists shall be lapped not less than 3 inches (76 mm) or butted over bearing partitions or beams and toenailed to the bearing member. Where ceiling joists are used to provide resistance to rafter thrust, lapped joists shall be nailed together in accordance with Table R802.5.1(9) and butted joists shall be tied together in a manner to resist such thrust. Joists that do not resist thrust shall be permitted to be nailed in accordance with Table R602.3(1).

R802.3.3 Blocking. Blocking shall be a minimum of utility grade lumber.

R802.4 Allowable ceiling joist spans. Spans for ceiling joists shall be in accordance with Tables R802.4(1) and R802.4(2). For other grades and species and for other loading conditions, refer to the AWC STJR.

R802.5 Allowable rafter spans. Spans for rafters shall be in accordance with Tables R802.5.1(1) through R802.5.1(8). For other grades and species and for other loading conditions, refer to the AWC STJR. The span of each rafter shall be measured along the horizontal projection of the rafter.

R802.5.1 Purlins. Installation of purlins to reduce the span of rafters is permitted as shown in Figure R802.5.1. Purlins shall be sized not less than the required size of the rafters that they support. Purlins shall be continuous and shall be supported by 2-inch by 4-inch (51 mm by 102 mm) braces installed to bearing walls at a slope not less than 45 degrees (0.785 rad) from the horizontal. The braces shall be spaced not more than 4 feet (1219 mm) on center and the unbraced length of braces shall not exceed 8 feet (2438 mm).

TABLE R802.4(1)
CEILING JOIST SPANS FOR COMMON LUMBER SPECIES
(Uninhabitable attics without storage, live load = 10 psf, L/Δ = 240)

CEILING JOIST SPACING (inches)	SPECIES AND GRADE		DEAD LOAD = 5 psf			
			2 × 4	2 × 6	2 × 8	2 × 10
			Maximum ceiling joist spans			
			(feet - inches)	(feet - inches)	(feet - inches)	(feet - inches)
12	Douglas fir-larch	SS	13-2	20-8	Note a	Note a
	Douglas fir-larch	#1	12-8	19-11	Note a	Note a
	Douglas fir-larch	#2	12-5	19-6	25-8	Note a
	Douglas fir-larch	#3	11-1	16-3	20-7	25-2
	Hem-fir	SS	12-5	19-6	25-8	Note a
	Hem-fir	#1	12-2	19-1	25-2	Note a
	Hem-fir	#2	11-7	18-2	24-0	Note a
	Hem-fir	#3	10-10	15-10	20-1	24-6
	Southern pine	SS	12-11	20-3	Note a	Note a
	Southern pine	#1	12-5	19-6	25-8	Note a
	Southern pine	#2	11-10	18-8	24-7	Note a
	Southern pine	#3	10-1	14-11	18-9	22-9
	Spruce-pine-fir	SS	12-2	19-1	25-2	Note a
	Spruce-pine-fir	#1	11-10	18-8	24-7	Note a
	Spruce-pine-fir	#2	11-10	18-8	24-7	Note a
	Spruce-pine-fir	#3	10-10	15-10	20-1	24-6
16	Douglas fir-larch	SS	11-11	18-9	24-8	Note a
	Douglas fir-larch	#1	11-6	18-1	23-10	Note a
	Douglas fir-larch	#2	11-3	17-8	23-4	Note a
	Douglas fir-larch	#3	9-7	14-1	17-10	21-9
	Hem-fir	SS	11-3	17-8	23-4	Note a
	Hem-fir	#1	11-0	17-4	22-10	Note a
	Hem-fir	#2	10-6	16-6	21-9	Note a
	Hem-fir	#3	9-5	13-9	17-5	21-3
	Southern pine	SS	11-9	18-5	24-3	Note a
	Southern pine	#1	11-3	17-8	23-10	Note a
	Southern pine	#2	10-9	16-11	21-7	25-7
	Southern pine	#3	8-9	12-11	16-3	19-9
	Spruce-pine-fir	SS	11-0	17-4	22-10	Note a
	Spruce-pine-fir	#1	10-9	16-11	22-4	Note a
	Spruce-pine-fir	#2	10-9	16-11	22-4	Note a
	Spruce-pine-fir	#3	9-5	13-9	17-5	21-3

(continued)

TABLE R802.4(1)—continued
CEILING JOIST SPANS FOR COMMON LUMBER SPECIES
(Uninhabitable attics without storage, live load = 10 psf, L/Δ = 240)

CEILING JOIST SPACING (inches)	SPECIES AND GRADE		DEAD LOAD = 5 psf			
			2 × 4	2 × 6	2 × 8	2 × 10
			Maximum ceiling joist spans			
			(feet - inches)	(feet - inches)	(feet - inches)	(feet - inches)
19.2	Douglas fir-larch	SS	11-3	17-8	23-3	Note a
	Douglas fir-larch	#1	10-10	17-0	22-5	Note a
	Douglas fir-larch	#2	10-7	16-8	21-4	26-0
	Douglas fir-larch	#3	8-9	12-10	16-3	19-10
	Hem-fir	SS	10-7	16-8	21-11	Note a
	Hem-fir	#1	10-4	16-4	21-6	Note a
	Hem-fir	#2	9-11	15-7	20-6	25-3
	Hem-fir	#3	8-7	12-6	15-10	19-5
	Southern -pine	SS	11-0	17-4	22-10	Note a
	Southern pine	#1	10-7	16-8	22-0	Note a
	Southern pine	#2	10-2	15-7	19-8	23-5
	Southern pine	#3	8-0	11-9	14-10	18-0
	Spruce-pine-fir	SS	10-4	16-4	21-6	Note a
	Spruce-pine-fir	#1	10-2	15-11	21-0	25-8
	Spruce-pine-fir	#2	10-2	15-11	21-0	25-8
	Spruce-pine-fir	#3	8-7	12-6	15-10	19-5
24	Douglas fir-larch	SS	10-5	16-4	21-7	Note a
	Douglas fir-larch	#1	10-0	15-9	20-1	24-6
	Douglas fir-larch	#2	9-10	15-0	19-1	23-3
	Douglas fir-larch	#3	7-10	11-6	14-7	17-9
	Hem-fir	SS	9-10	15-6	20-5	Note a
	Hem-fir	#1	9-8	15-2	19-10	24-3
	Hem-fir	#2	9-2	14-5	18-6	22-7
	Hem-fir	#3	7-8	11-2	14-2	17-4
	Southern pine	SS	10-3	16-1	21-2	Note a
	Southern pine	#1	9-10	15-6	20-5	24-0
	Southern pine	#2	9-3	13-11	17-7	20-11
	Southern pine	#3	7-2	10-6	13-3	16-1
	Spruce-pine-fir	SS	9-8	15-2	19-11	25-5
	Spruce-pine-fir	#1	9-5	14-9	18-9	22-11
	Spruce-pine-fir	#2	9-5	14-9	18-9	22-11
	Spruce-pine-fir	#3	7-8	11-2	14-2	17-4

Check sources for availability of lumber in lengths greater than 20 feet.
For SI: 1 inch = 25.4 mm, 1 foot = 304.8 mm, 1 pound per square foot = 0.0479 kPa.
a. Span exceeds 26 feet in length.

TABLE R802.4(2)
CEILING JOIST SPANS FOR COMMON LUMBER SPECIES
(Uninhabitable attics with limited storage, live load = 20 psf, L/Δ = 240)

CEILING JOIST SPACING (inches)	SPECIES AND GRADE		DEAD LOAD = 10 psf			
			2 × 4	2 × 6	2 × 8	2 × 10
			Maximum ceiling joist spans			
			(feet - inches)	(feet - inches)	(feet - inches)	(feet - inches)
12	Douglas fir-larch	SS	10-5	16-4	21-7	Note a
	Douglas fir-larch	#1	10-0	15-9	20-1	24-6
	Douglas fir-larch	#2	9-10	15-0	19-1	23-3
	Douglas fir-larch	#3	7-10	11-6	14-7	17-9
	Hem-fir	SS	9-10	15-6	20-5	Note a
	Hem-fir	#1	9-8	15-2	19-10	24-3
	Hem-fir	#2	9-2	14-5	18-6	22-7
	Hem-fir	#3	7-8	11-2	14-2	17-4
	Southern pine	SS	10-3	16-1	21-2	Note a
	Southern pine	#1	9-10	15-6	20-5	24-0
	Southern pine	#2	9-3	13-11	17-7	20-11
	Southern pine	#3	7-2	10-6	13-3	16-1
	Spruce-pine-fir	SS	9-8	15-2	19-11	25-5
	Spruce-pine-fir	#1	9-5	14-9	18-9	22-11
	Spruce-pine-fir	#2	9-5	14-9	18-9	22-11
	Spruce-pine-fir	#3	7-8	11-2	14-2	17-4
16	Douglas fir-larch	SS	9-6	14-11	19-7	25-0
	Douglas fir-larch	#1	9-1	13-9	17-5	21-3
	Douglas fir-larch	#2	8-11	13-0	16-6	20-2
	Douglas fir-larch	#3	6-10	9-11	12-7	15-5
	Hem-fir	SS	8-11	14-1	18-6	23-8
	Hem-fir	#1	8-9	13-7	17-2	21-0
	Hem-fir	#2	8-4	12-8	16-0	19-7
	Hem-fir	#3	6-8	9-8	12-4	15-0
	Southern pine	SS	9-4	14-7	19-3	24-7
	Southern pine	#1	8-11	14-0	17-9	20-9
	Southern pine	#2	8-0	12-0	15-3	18-1
	Southern pine	#3	6-2	9-2	11-6	14-0
	Spruce-pine-fir	SS	8-9	13-9	18-1	23-1
	Spruce-pine-fir	#1	8-7	12-10	16-3	19-10
	Spruce-pine-fir	#2	8-7	12-10	16-3	19-10
	Spruce-pine-fir	#3	6-8	9-8	12-4	15-0

(continued)

TABLE R802.4(2)—continued
CEILING JOIST SPANS FOR COMMON LUMBER SPECIES
(Uninhabitable attics with limited storage, live load = 20 psf, L/Δ = 240)

CEILING JOIST SPACING (inches)	SPECIES AND GRADE		DEAD LOAD = 10 psf			
			2 × 4	2 × 6	2 × 8	2 × 10
			Maximum ceiling joist spans			
			(feet - inches)	(feet - inches)	(feet - inches)	(feet - inches)
19.2	Douglas fir-larch	SS	8-11	14-0	18-5	23-7
	Douglas fir-larch	#1	8-7	12-6	15-10	19-5
	Douglas fir-larch	#2	8-2	11-11	15-1	18-5
	Douglas fir-larch	#3	6-2	9-1	11-6	14-1
	Hem-fir	SS	8-5	13-3	17-5	22-3
	Hem-fir	#1	8-3	12-4	15-8	19-2
	Hem-fir	#2	7-10	11-7	14-8	17-10
	Hem-fir	#3	6-1	8-10	11-3	13-8
	Southern pine	SS	8-9	13-9	18-2	23-1
	Southern pine	#1	8-5	12-9	16-2	18-11
	Southern pine	#2	7-4	11-0	13-11	16-6
	Southern pine	#3	5-8	8-4	10-6	12-9
	Spruce-pine-fir	SS	8-3	12-11	17-1	21-8
	Spruce-pine-fir	#1	8-0	11-9	14-10	18-2
	Spruce-pine-fir	#2	8-0	11-9	14-10	18-2
	Spruce-pine-fir	#3	6-1	8-10	11-3	13-8
24	Douglas fir-larch	SS	8-3	13-0	17-2	21-3
	Douglas fir-larch	#1	7-8	11-2	14-2	17-4
	Douglas fir-larch	#2	7-3	10-8	13-6	16-5
	Douglas fir-larch	#3	5-7	8-1	10-3	12-7
	Hem-fir	SS	7-10	12-3	16-2	20-6
	Hem-fir	#1	7-7	11-1	14-0	17-1
	Hem-fir	#2	7-1	10-4	13-1	16-0
	Hem-fir	#3	5-5	7-11	10-0	12-3
	Southern pine	SS	8-1	12-9	16-10	21-6
	Southern pine	#1	7-8	11-5	14-6	16-11
	Southern pine	#2	6-7	9-10	12-6	14-9
	Southern pine	#3	5-1	7-5	9-5	11-5
	Spruce-pine-fir	SS	7-8	12-0	15-10	19-5
	Spruce-pine-fir	#1	7-2	10-6	13-3	16-3
	Spruce-pine-fir	#2	7-2	10-6	13-3	16-3
	Spruce-pine-fir	#3	5-5	7-11	10-0	12-3

Check sources for availability of lumber in lengths greater than 20 feet.
For SI: 1 inch = 25.4 mm, 1 foot = 304.8 mm, 1 pound per square foot = 0.0479 kPa.
a. Span exceeds 26 feet in length.

TABLE R802.5.1(1)
RAFTER SPANS FOR COMMON LUMBER SPECIES
(Roof live load = 20 psf, ceiling not attached to rafters, L/Δ = 180)

RAFTER SPACING (inches)	SPECIES AND GRADE		DEAD LOAD = 10 psf					DEAD LOAD = 20 psf				
			2 × 4	2 × 6	2 × 8	2 × 10	2 × 12	2 × 4	2 × 6	2 × 8	2 × 10	2 × 12
			Maximum rafter spans[a]									
			(feet - inches)	(feet - inches)	(feet - inches)	(feet - inches)	(feet - inches)	(feet - inches)	(feet - inches)	(feet - inches)	(feet - inches)	(feet - inches)
12	Douglas fir-larch	SS	11-6	18-0	23-9	Note b	Note b	11-6	18-0	23-9	Note b	Note b
	Douglas fir-larch	#1	11-1	17-4	22-5	Note b	Note b	10-6	15-4	19-5	23-9	Note b
	Douglas fir-larch	#2	10-10	16-10	21-4	26-0	Note b	10-0	14-7	18-5	22-6	26-0
	Douglas fir-larch	#3	8-9	12-10	16-3	19-10	23-0	7-7	11-1	14-1	17-2	19-11
	Hem-fir	SS	10-10	17-0	22-5	Note b	Note b	10-10	17-0	22-5	Note b	Note b
	Hem-fir	#1	10 -7	16-8	22-0	Note b	Note b	10-4	15-2	19-2	23-5	Note b
	Hem-fir	#2	10-1	15-11	20-8	25-3	Note b	9-8	14-2	17-11	21-11	25-5
	Hem-fir	#3	8-7	12-6	15-10	19-5	22-6	7-5	10-10	13-9	16-9	19-6
	Southern pine	SS	11-3	17-8	23-4	Note b	Note b	11-3	17-8	23-4	Note b	Note b
	Southern pine	#1	10-10	17-0	22-5	Note b	Note b	10-6	15-8	19-10	23-2	Note b
	Southern pine	#2	10-4	15-7	19-8	23-5	Note b	9-0	13-6	17-1	20-3	23-10
	Southern pine	#3	8-0	11-9	14-10	18-0	21-4	6-11	10-2	12-10	15-7	18-6
	Spruce-pine-fir	SS	10-7	16-8	21-11	Note b	Note b	10-7	16-8	21-9	Note b	Note b
	Spruce-pine-fir	#1	10-4	16-3	21-0	25-8	Note b	9-10	14-4	18-2	22-3	25-9
	Spruce-pine-fir	#2	10-4	16-3	21-0	25-8	Note b	9-10	14-4	18-2	22-3	25-9
	Spruce-pine-fir	#3	8-7	12-6	15-10	19-5	22-6	7-5	10-10	13-9	16-9	19-6
16	Douglas fir-larch	SS	10-5	16-4	21-7	Note b	Note b	10-5	16-3	20-7	25-2	Note b
	Douglas fir-larch	#1	10-0	15-4	19-5	23-9	Note b	9-1	13-3	16-10	20-7	23-10
	Douglas fir-larch	#2	9-10	14-7	18-5	22-6	26-0	8-7	12-7	16-0	19-6	22-7
	Douglas fir-larch	#3	7-7	11-1	14-1	17-2	19-11	6-7	9-8	12-12	14-11	17-3
	Hem-fir	SS	9-10	15-6	20-5	Note b	Note b	9-10	15-6	19-11	24-4	Note b
	Hem-fir	#1	9-8	15-2	19-2	23-5	Note b	9-0	13-1	16-7	20-4	23-7
	Hem-fir	#2	9-2	14-2	17-11	21-11	25-5	8-5	12-3	15-6	18-11	22-0
	Hem-fir	#3	7-5	10-10	13-9	16-9	19-6	6-5	9-5	11-11	14-6	16-10
	Southern pine	SS	10-3	16-1	21-2	Note b	Note b	10-3	16-1	21-2	25-7	Note b
	Southern pine	#1	9-10	15-6	19-10	23-2	Note b	9-1	13-7	17-2	20-1	23-10
	Southern pine	#2	9-0	13-6	17-1	20-3	23-10	7-9	11-8	14-9	17-6	20-8
	Southern pine	#3	6-11	10-2	12-10	15-7	18-6	6-0	8-10	11-2	13-6	16-0
	Spruce-pine-fir	SS	9-8	15-2	19-11	25-5	Note b	9-8	14-10	18-10	23-0	Note b
	Spruce-pine-fir	#1	9-5	14-4	18-2	22-3	25-9	8-6	12-5	15-9	19-3	22-4
	Spruce-pine-fir	#2	9-5	14-4	18-2	22-3	25-9	8-6	12-5	15-9	19-3	22-4
	Spruce-pine-fir	#3	7-5	10-10	13-9	16-9	19-6	6-5	9-5	11-11	14-6	16-10
19.2	Douglas fir-larch	SS	9-10	15-5	20-4	25-11	Note b	9-10	14-10	18-10	23-0	Note b
	Douglas fir-larch	#1	9-5	14-0	17-9	21-8	25-2	8-4	12-2	15-4	18-9	21-9
	Douglas fir-larch	#2	9-1	13-3	16-10	20-7	23-10	7-10	11-6	14-7	17-10	20-8
	Douglas fir-larch	#3	6-11	10-2	12-10	15-8	18-3	6-0	8-9	11-2	12-7	15-9
	Hem-fir	SS	9-3	14-7	19-2	24-6	Note b	9-3	14-4	18-2	22-3	25-9
	Hem-fir	#1	9-1	13-10	17-6	21-5	24-10	8-2	12-0	15-2	18-6	21-6
	Hem-fir	#2	8-8	12-11	16-4	20-0	23-2	7-8	11-2	14-2	17-4	20-1
	Hem-fir	#3	6-9	9-11	12-7	15-4	17-9	5-10	8-7	10-10	13-3	15-5
	Southern pine	SS	9-8	15-2	19-11	25-5	Note b	9-8	15-2	19-7	23-4	Note b
	Southern pine	#1	9-3	14-3	18-1	21-2	25-2	8-4	12-4	15-8	18-4	21-9
	Southern pine	#2	8-2	12-3	15-7	18-6	21-9	7-1	10-8	13-6	16-0	18-10
	Southern pine	#3	6-4	9-4	11-9	14-3	16-10	5-6	8-1	10-2	12-4	14-7
	Spruce-pine-fir	SS	9-1	14-3	18-9	23-11	Note b	9-1	13-7	17-2	21-0	24-4
	Spruce-pine-fir	#1	8-10	13-1	16-7	20-3	23-6	7-9	11-4	14-4	17-7	20-4
	Spruce-pine-fir	#2	8-10	13-1	16-7	20-3	23-6	7-9	11-4	14-4	17-7	20-4
	Spruce-pine-fir	#3	6-9	9-11	12-7	15-4	17-9	5-10	8-7	10-10	13-3	15-5

(continued)

2837

TABLE R802.5.1(1)—continued
RAFTER SPANS FOR COMMON LUMBER SPECIES
(Roof live load = 20 psf, ceiling not attached to rafters, L/Δ = 180)

RAFTER SPACING (inches)	SPECIES AND GRADE		DEAD LOAD = 10 psf					DEAD LOAD = 20 psf				
			2 × 4	2 × 6	2 × 8	2 × 10	2 × 12	2 × 4	2 × 6	2 × 8	2 × 10	2 × 12
			Maximum rafter spans[a]									
			(feet - inches)	(feet - inches)	(feet - inches)	(feet - inches)	(feet - inches)	(feet - inches)	(feet - inches)	(feet - inches)	(feet - inches)	(feet - inches)
24	Douglas fir-larch	SS	9-1	14-4	18-10	23-9	Note b	9-1	13-3	16-10	20-7	23-10
	Douglas fir-larch	#1	8-7	12-6	15-10	19-5	22-6	7-5	10-10	13-9	16-9	19-6
	Douglas fir-larch	#2	8-2	11-11	15-1	18-5	21-4	7-0	10-4	13-0	15-11	18-6
	Douglas fir-larch	#3	6-2	9-1	11-6	14-1	16-3	5-4	7-10	10-0	12-2	14-1
	Hem-fir	SS	8-7	13-6	17-10	22-9	Note b	8-7	12-10	16-3	19-10	23-0
	Hem-fir	#1	8-5	12-4	15-8	19-2	22-2	7-4	10-9	13-7	16-7	19-3
	Hem-fir	#2	7-11	11-7	14-8	17-10	20-9	6-10	10-0	12-8	15-6	17-11
	Hem-fir	#3	6-1	8-10	11-3	13-8	15-11	5-3	7-8	9-9	11-10	13-9
	Southern pine	SS	8-11	14-1	18-6	23-8	Note b	8-11	13-10	17-6	20-10	24-8
	Southern pine	#1	8-7	12-9	16-2	18-11	22-6	7-5	11-1	14-0	16-5	19-6
	Southern pine	#2	7-4	11-0	10-11	16-6	19-6	6-4	9-6	12-1	14-4	16-10
	Southern pine	#3	5-8	8-4	10-6	12-9	15-1	4-11	7-3	9-1	11-0	13-1
	Spruce-pine-fir	SS	8-5	13-3	17-5	21-8	25-2	8-4	12-2	15-4	18-9	21-9
	Spruce-pine-fir	#1	8-0	11-9	14-10	18-2	21-0	6-11	10-2	12-10	15-8	18-3
	Spruce-pine-fir	#2	8-0	11-9	14-10	18-2	21-0	6-11	10-2	12-10	15-8	18-3
	Spruce-pine-fir	#3	6-1	8-10	11-3	13-8	15-11	5-3	7-8	9-9	11-10	13-9

Check sources for availability of lumber in lengths greater than 20 feet.

For SI: 1 inch = 25.4 mm, 1 foot = 304.8 mm, 1 pound per square foot = 0.0479 kPa.

a. The tabulated rafter spans assume that ceiling joists are located at the bottom of the attic space or that some other method of resisting the outward push of the rafters on the bearing walls, such as rafter ties, is provided at that location. Where ceiling joists or rafter ties are located higher in the attic space, the rafter spans shall be multiplied by the following factors:

H_C/H_R	Rafter Span Adjustment Factor
1/3	0.67
1/4	0.76
1/5	0.83
1/6	0.90
1/7.5 or less	1.00

where:

H_C = Height of ceiling joists or rafter ties measured vertically above the top of the rafter support walls.

H_R = Height of roof ridge measured vertically above the top of the rafter support walls.

b. Span exceeds 26 feet in length.

TABLE R802.5.1(2)
RAFTER SPANS FOR COMMON LUMBER SPECIES
(Roof live load = 20 psf, ceiling attached to rafters, L/Δ = 240)

RAFTER SPACING (inches)	SPECIES AND GRADE		DEAD LOAD = 10 psf					DEAD LOAD = 20 psf				
			2 × 4	2 × 6	2 × 8	2 × 10	2 × 12	2 × 4	2 × 6	2 × 8	2 × 10	2 × 12
			Maximum rafter spans[a]									
			(feet - inches)	(feet - inches)	(feet - inches)	(feet - inches)	(feet - inches)	(feet - inches)	(feet - inches)	(feet - inches)	(feet - inches)	(feet - inches)
12	Douglas fir-larch	SS	10-5	16-4	21-7	Note b	Note b	10-5	16-4	21-7	Note b	Note b
	Douglas fir-larch	#1	10-0	15-9	20-10	Note b	Note b	10-0	15-4	19-5	23-9	Note b
	Douglas fir-larch	#2	9-10	15-6	20-5	26-0	Note b	9-10	14-7	18-5	22-6	26-0
	Douglas fir-larch	#3	8-9	12-10	16-3	19-10	23-0	7-7	11-1	14-1	17-2	19-11
	Hem-fir	SS	9-10	15-6	20-5	Note b	Note b	9-10	15-6	20-5	Note b	Note b
	Hem-fir	#1	9-8	15-2	19-11	25-5	Note b	9-8	15-2	19-2	23-5	Note b
	Hem-fir	#2	9-2	14-5	19-0	24-3	Note b	9-2	14-2	17-11	21-11	25-5
	Hem-fir	#3	8-7	12-6	15-10	19-5	22-6	7-5	10-10	13-9	16-9	19-6
	Southern pine	SS	10-3	16-1	21-2	Note b	Note b	10-3	16-1	21-2	Note b	Note b
	Southern pine	#1	9-10	15-6	20-5	Note b	Note b	9-10	15-6	19-10	23-2	Note b
	Southern pine	#2	9-5	14-9	19-6	23-5	Note b	9-0	13-6	17-1	20-3	23-10
	Southern pine	#3	8-0	11-9	14-10	18-0	21-4	6-11	10-2	12-10	15-7	18-6
	Spruce-pine-fir	SS	9-8	15-2	19-11	25-5	Note b	9-8	15-2	19-11	25-5	Note b
	Spruce-pine-fir	#1	9-5	14-9	19-6	24-10	Note b	9-5	14-4	18-2	22-3	25-9
	Spruce-pine-fir	#2	9-5	14-9	19-6	24-10	Note b	9-5	14-4	18-2	22-3	25-9
	Spruce-pine-fir	#3	8-7	12-6	15-10	19-5	22-6	7-5	10-10	13-9	16-9	19-6
16	Douglas fir-larch	SS	9-6	14-11	19-7	25-0	Note b	9-6	14-11	19-7	25-0	Note b
	Douglas fir-larch	#1	9-1	14-4	18-11	23-9	Note b	9-1	13-3	16-10	20-7	23-10
	Douglas fir-larch	#2	8-11	14-1	18-5	22-6	26-0	8-7	12-7	16-0	19-6	22-7
	Douglas fir-larch	#3	7-7	11-1	14-1	17-2	19-11	6-7	9-8	12-2	14-11	17-3
	Hem-fir	SS	8-11	14-1	18-6	23-8	Note b	8-11	14-1	18-6	23-8	Note b
	Hem-fir	#1	8-9	13-9	18-1	23-1	Note b	8-9	13-1	16-7	20-4	23-7
	Hem-fir	#2	8-4	13-1	17-3	21-11	25-5	8-4	12-3	15-6	18-11	22-0
	Hem-fir	#3	7-5	10-10	13-9	16-9	19-6	6-5	9-5	11-11	14-6	16-10
	Southern pine	SS	9-4	14-7	19-3	24-7	Note b	9-4	14-7	19-3	24-7	Note b
	Southern pine	#1	8-11	14-1	18-6	23-2	Note b	8-11	13-7	17-2	20-1	23-10
	Southern pine	#2	8-7	13-5	17-1	20-3	23-10	7-9	11-8	14-9	17-6	20-8
	Southern pine	#3	6-11	10-2	12-10	15-7	18-6	6-0	8-10	11-2	13-6	16-0
	Spruce-pine-fir	SS	8-9	13-9	18-1	23-1	Note b	8-9	13-9	18-1	23-0	Note b
	Spruce-pine-fir	#1	8-7	13-5	17-9	22-3	25-9	8-6	12-5	15-9	19-3	22-4
	Spruce-pine-fir	#2	8-7	13-5	17-9	22-3	25-9	8-6	12-5	15-9	19-3	22-4
	Spruce-pine-fir	#3	7-5	10-10	13-9	16-9	19-6	6-5	9-5	11-11	14-6	16-10
19.2	Douglas fir-larch	SS	8-11	14-0	18-5	23-7	Note b	8-11	14-0	18-5	23-0	Note b
	Douglas fir-larch	#1	8-7	13-6	17-9	21-8	25-2	8-4	12-2	15-4	18-9	21-9
	Douglas fir-larch	#2	8-5	13-3	16-10	20-7	23-10	7-10	11-6	14-7	17-10	20-8
	Douglas fir-larch	#3	6-11	10-2	12-10	15-8	18-3	6-0	8-9	11-2	13-7	15-9
	Hem-fir	SS	8-5	13-3	17-5	22-3	Note b	8-5	13-3	17-5	22-3	25-9
	Hem-fir	#1	8-3	12-11	17-1	21-5	24-10	8-2	12-0	15-2	18-6	21-6
	Hem-fir	#2	7-10	12-4	16-3	20-0	23-2	7-8	11-2	14-2	17-4	20-1
	Hem-fir	#3	6-9	9-11	12-7	15-4	17-9	5-10	8-7	10-10	13-3	15-5

(continued)

2839

TABLE R802.5.1(2)—continued
RAFTER SPANS FOR COMMON LUMBER SPECIES
(Roof live load = 20 psf, ceiling attached to rafters, L/Δ = 240)

RAFTER SPACING (inches)	SPECIES AND GRADE		DEAD LOAD = 10 psf					DEAD LOAD = 20 psf				
			2 × 4	2 × 6	2 × 8	2 × 10	2 × 12	2 × 4	2 × 6	2 × 8	2 × 10	2 × 12
			Maximum rafter spans[a]									
			(feet - inches)	(feet - inches)	(feet - inches)	(feet - inches)	(feet - inches)	(feet - inches)	(feet - inches)	(feet - inches)	(feet - inches)	(feet - inches)
19.2	Southern pine	SS	8-9	13-9	18-2	23-1	Note b	8-9	13-9	18-2	23-1	Note b
	Southern pine	#1	8-5	13-3	17-5	21-2	25-2	8-4	12-4	15-8	18-4	21-9
	Southern pine	#2	8-1	12-3	15-7	18-6	21-9	7-1	10-8	13-6	16-0	18-10
	Southern pine	#3	6-4	9-4	11-9	14-3	16-10	5-6	8-1	10-2	12-4	14-7
	Spruce-pine-fir	SS	8-3	12-11	17-1	21-9	Note b	8-3	12-11	17-1	21-0	24-4
	Spruce-pine-fir	#1	8-1	12-8	16-7	20-3	23-6	7-9	11-4	14-4	17-7	20-4
	Spruce-pine-fir	#2	8-1	12-8	16-7	20-3	23-6	7-9	11-4	14-4	17-7	20-4
	Spruce-pine-fir	#3	6-9	9-11	12-7	15-4	17-9	5-10	8-7	10-10	13-3	15-5
24	Douglas fir-larch	SS	8-3	13-0	17-2	21-10	Note b	8-3	13-0	16-10	20-7	23-10
	Douglas fir-larch	#1	8-0	12-6	15-10	19-5	22-6	7-5	10-10	13-9	16-9	19-6
	Douglas fir-larch	#2	7-10	11-11	15-1	18-5	21-4	7-0	10-4	13-0	15-11	18-6
	Douglas fir-larch	#3	6-2	9-1	11-6	14-1	16-3	5-4	7-10	10-0	12-2	14-1
	Hem-fir	SS	7-10	12-3	16-2	20-8	25-1	7-10	12-3	16-2	19-10	23-0
	Hem-fir	#1	7-8	12-0	15-8	19-2	22-2	7-4	10-9	13-7	16-7	19-3
	Hem-fir	#2	7-3	11-5	14-8	17-10	20-9	6-10	10-0	12-8	15-6	17-11
	Hem-fir	#3	6-1	8-10	11-3	13-8	15-11	5-3	7-8	9-9	11-10	13-9
	Southern pine	SS	8-1	12-9	16-10	21-6	Note b	8-1	12-9	16-10	20-10	24-8
	Southern pine	#1	7-10	12-3	16-2	18-11	22-6	7-5	11-1	14-0	16-5	19-6
	Southern pine	#2	7-4	11-0	13-11	16-6	19-6	6-4	9-6	12-1	14-4	16-10
	Southern pine	#3	5-8	8-4	10-6	12-9	15-1	4-11	7-3	9-1	11-0	13-1
	Spruce-pine-fir	SS	7-8	12-0	15-10	20-2	24-7	7-8	12-0	15-4	18-9	21-9
	Spruce-pine-fir	#1	7-6	11-9	14-10	18-2	21-0	6-11	10-2	12-10	15-8	18-3
	Spruce-pine-fir	#2	7-6	11-9	14-10	18-2	21-0	6-11	10-2	12-10	15-8	18-3
	Spruce-pine-fir	#3	6-1	8-10	11-3	13-8	15-11	5-3	7-8	9-9	11-10	13-9

Check sources for availability of lumber in lengths greater than 20 feet.

For SI: 1 inch = 25.4 mm, 1 foot = 304.8 mm, 1 pound per square foot = 0.0479 kPa.

a. The tabulated rafter spans assume that ceiling joists are located at the bottom of the attic space or that some other method of resisting the outward push of the rafters on the bearing walls, such as rafter ties, is provided at that location. Where ceiling joists or rafter ties are located higher in the attic space, the rafter spans shall be multiplied by the following factors:

H_C/H_R	Rafter Span Adjustment Factor
1/3	0.67
1/4	0.76
1/5	0.83
1/6	0.90
1/7.5 or less	1.00

where:

H_C = Height of ceiling joists or rafter ties measured vertically above the top of the rafter support walls.

H_R = Height of roof ridge measured vertically above the top of the rafter support walls.

b. Span exceeds 26 feet in length.

TABLE R802.5.1(3)
RAFTER SPANS FOR COMMON LUMBER SPECIES
(Ground snow load = 30 psf, ceiling not attached to rafters, L/Δ = 180)

RAFTER SPACING (inches)	SPECIES AND GRADE		DEAD LOAD = 10 psf					DEAD LOAD = 20 psf				
			2 × 4	2 × 6	2 × 8	2 × 10	2 × 12	2 × 4	2 × 6	2 × 8	2 × 10	2 × 12
			Maximum rafter spans[a]									
			(feet - inches)	(feet - inches)	(feet - inches)	(feet - inches)	(feet - inches)	(feet - inches)	(feet - inches)	(feet - inches)	(feet - inches)	(feet - inches)
12	Douglas fir-larch	SS	10-0	15-9	20-9	Note b	Note b	10-0	15-9	20-5	24-11	Note b
	Douglas fir-larch	#1	9-8	14-9	18-8	22-9	Note b	9-0	13-2	16-8	20-4	23-7
	Douglas fir-larch	#2	9-6	14-0	17-8	21-7	25-1	8-6	12-6	15-10	19-4	22-5
	Douglas fir-larch	#3	7-3	10-8	13-6	16-6	19-2	6-6	9-6	12-1	14-9	17-1
	Hem-fir	SS	9-6	14-10	19-7	25-0	Note b	9-6	14-10	19-7	24-1	Note b
	Hem-fir	#1	9-3	14-6	18-5	22-6	26-0	8-11	13-0	16-6	20-1	23-4
	Hem-fir	#2	8-10	13-7	17-2	21-0	24-4	8-4	12-2	15-4	18-9	21-9
	Hem-fir	#3	7-1	10-5	13-2	16-1	18-8	6-4	9-4	11-9	14-5	16-8
	Southern pine	SS	9-10	15-6	20-5	Note b	Note b	9-10	15-6	20-5	25-4	Note b
	Southern pine	#1	9-6	14-10	19-0	22-3	Note b	9-0	13-5	17-0	19-11	23-7
	Southern pine	#2	8-7	12-11	16-4	19-5	22-10	7-8	11-7	14-8	17-4	20-5
	Southern pine	#3	6-7	9-9	12-4	15-0	17-9	5-11	8-9	11-0	13-5	15-10
	Spruce-pine-fir	SS	9-3	14-7	19-2	24-6	Note b	9-3	14-7	18-8	22-9	Note b
	Spruce-pine-fir	#1	9-1	13-9	17-5	21-4	24-8	8-5	12-4	15-7	19-1	22-1
	Spruce-pine-fir	#2	9-1	13-9	17-5	21-4	24-8	8-5	12-4	15-7	19-1	22-1
	Spruce-pine-fir	#3	7-1	10-5	13-2	16-1	18-8	6-4	9-4	11-9	14-5	16-8
16	Douglas fir-larch	SS	9-1	14-4	18-10	24-1	Note b	9-1	14-0	17-8	21-7	25-1
	Douglas fir-larch	#1	8-9	12-9	16-2	19-9	22-10	7-10	11-5	14-5	17-8	20-5
	Douglas fir-larch	#2	8-3	12-1	15-4	18-9	21-8	7-5	10-10	13-8	16-9	19-5
	Douglas fir-larch	#3	6-4	9-3	11-8	14-3	16-7	5-8	8-3	10-6	12-9	14-10
	Hem-fir	SS	8-7	13-6	17-10	22-9	Note b	8-7	13-6	17-1	20-10	24-2
	Hem-fir	#1	8-5	12-7	15-11	19-6	22-7	7-8	11-3	14-3	17-5	20-2
	Hem-fir	#2	8-0	11-9	14-11	18-2	21-1	7-2	10-6	13-4	16-3	18-10
	Hem-fir	#3	6-2	9-0	11-5	13-11	16-2	5-6	8-1	10-3	12-6	14-6
	Southern pine	SS	8-11	14-1	18-6	23-8	Note b	8-11	14-1	18-5	1-11	25-11
	Southern pine	#1	8-7	13-0	16-6	19-3	22-10	7-10	11-7	14-9	17-3	20-5
	Southern pine	#2	7-6	11-2	14-2	16-10	19-10	6-8	10-0	12-8	15-1	17-9
	Southern pine	#3	5-9	8-6	10-8	13-0	15-4	5-2	7-7	9-7	11-7	13-9
	Spruce-pine-fir	SS	8-5	13-3	17-5	22-1	25-7	8-5	12-9	16-2	19-9	22-10
	Spruce-pine-fir	#1	8-2	11-11	15-1	18-5	21-5	7-3	10-8	13-6	16-6	19-2
	Spruce-pine-fir	#2	8-2	11-11	15-1	18-5	21-5	7-3	10-8	13-6	16-6	19-2
	Spruce-pine-fir	#3	6-2	9-0	11-5	13-11	16-2	5-6	8-1	10-3	12-6	14-6
19.2	Douglas fir-larch	SS	8-7	13-6	17-9	22-1	25-7	8-7	12-9	16-2	19-9	22-10
	Douglas fir-larch	#1	7-11	11-8	14-9	18-0	20-11	7-1	10-5	13-2	16-1	18-8
	Douglas fir-larch	#2	7-7	11-0	14-0	17-1	19-10	6-9	9-10	12-6	15-3	17-9
	Douglas fir-larch	#3	5-9	8-5	10-8	13-1	15-2	5-2	7-7	9-7	11-8	13-6
	Hem-fir	SS	8-1	12-9	16-9	21-4	24-8	8-1	12-4	15-7	19-1	22-1
	Hem-fir	#1	7-10	11-6	14-7	17-9	20-7	7-0	10-3	13-0	15-11	18-5
	Hem-fir	#2	7-4	10-9	13-7	16-7	19-3	6-7	9-7	12-2	14-10	17-3
	Hem-fir	#3	5-7	8-3	10-5	12-9	14-9	5-0	7-4	9-4	11-5	13-2

(continued)

TABLE R802.5.1(3)—continued
RAFTER SPANS FOR COMMON LUMBER SPECIES
(Ground snow load = 30 psf, ceiling not attached to rafters, L/Δ = 180)

RAFTER SPACING (inches)	SPECIES AND GRADE		DEAD LOAD = 10 psf					DEAD LOAD = 20 psf				
			2 × 4	2 × 6	2 × 8	2 × 10	2 × 12	2 × 4	2 × 6	2 × 8	2 × 10	2 × 12
			Maximum rafter spans[a]									
			(feet - inches)	(feet - inches)	(feet - inches)	(feet - inches)	(feet - inches)	(feet - inches)	(feet - inches)	(feet - inches)	(feet - inches)	(feet - inches)
19.2	Southern pine	SS	8-5	13-3	17-5	22-3	Note b	8-5	13-3	16-10	20-0	23-7
	Southern pine	#1	8-0	11-10	15-1	17-7	20-11	7-1	10-7	13-5	15-9	18-8
	Southern pine	#2	6-10	10-2	12-11	15-4	18-1	6-1	9-2	11-7	13-9	16-2
	Southern pine	#3	5-3	7-9	9-9	11-10	14-0	4-8	6-11	8-9	10-7	12-6
	Spruce-pine-fir	SS	7-11	12-5	16-5	20-2	23-4	7-11	11-8	14-9	18-0	20-11
	Spruce-pine-fir	#1	7-5	10-11	13-9	16-10	19-6	6-8	9-9	12-4	15-1	17-6
	Spruce-pine-fir	#2	7-5	10-11	13-9	16-10	19-6	6-8	9-9	12-4	15-1	17-6
	Spruce-pine-fir	#3	5-7	8-3	10-5	12-9	14-9	5-0	7-4	9-4	11-5	13-2
24	Douglas fir-larch	SS	8-0	12-6	16-2	19-9	22-10	7-10	11-5	14-5	17-8	20-5
	Douglas fir-larch	#1	7-1	10-5	13-2	16-1	18-8	6-4	9-4	11-9	14-5	16-8
	Douglas fir-larch	#2	6-9	9-10	12-6	15-3	17-9	6-0	8-10	11-2	13-8	15-10
	Douglas fir-larch	#3	5-2	7-7	9-7	11-8	13-6	4-7	6-9	8-7	10-5	12-1
	Hem-fir	SS	7-6	11-10	15-7	19-1	22-1	7-6	11-0	13-11	17-0	19-9
	Hem-fir	#1	7-0	10-3	13-0	15-11	18-5	6-3	9-2	11-8	14-3	16-6
	Hem-fir	#2	6-7	9-7	12-2	14-10	17-3	5-10	8-7	10-10	13-3	15-5
	Hem-fir	#3	5-0	7-4	9-4	11-5	13-2	4-6	6-7	8-4	10-2	11-10
	Southern pine	SS	7-10	12-3	16-2	20-0	23-7	7-10	11-10	15-0	17-11	21-2
	Southern pine	#1	7-1	10-7	13-5	15-9	18-8	6-4	9-6	12-0	14-1	16-8
	Southern pine	#2	6-1	9-2	11-7	13-9	16-2	5-5	8-2	10-4	12-3	14-6
	Southern pine	#3	4-8	6-11	8-9	10-7	12-6	4-2	6-2	7-10	9-6	11-2
	Spruce-pine-fir	SS	7-4	11-7	14-9	18-0	20-11	7-1	10-5	13-2	16-1	18-8
	Spruce-pine-fir	#1	6-8	9-9	12-4	15-1	17-6	5-11	8-8	11-0	13-6	15-7
	Spruce-pine-fir	#2	6-8	9-9	12-4	15-1	17-6	5-11	8-8	11-0	13-6	15-7
	Spruce-pine-fir	#3	5-0	7-4	9-4	11-5	13-2	4-6	6-7	8-4	10-2	11-10

Check sources for availability of lumber in lengths greater than 20 feet.

For SI: 1 inch = 25.4 mm, 1 foot = 304.8 mm, 1 pound per square foot = 0.0479 kPa.

a. The tabulated rafter spans assume that ceiling joists are located at the bottom of the attic space or that some other method of resisting the outward push of the rafters on the bearing walls, such as rafter ties, is provided at that location. Where ceiling joists or rafter ties are located higher in the attic space, the rafter spans shall be multiplied by the following factors:

H_C/H_R	Rafter Span Adjustment Factor
1/3	0.67
1/4	0.76
1/5	0.83
1/6	0.90
1/7.5 or less	1.00

where:

H_C = Height of ceiling joists or rafter ties measured vertically above the top of the rafter support walls.

H_R = Height of roof ridge measured vertically above the top of the rafter support walls.

b. Span exceeds 26 feet in length.

TABLE R802.5.1(4)
RAFTER SPANS FOR COMMON LUMBER SPECIES
(Ground snow load = 50 psf, ceiling not attached to rafters, L/Δ = 180)

RAFTER SPACING (inches)	SPECIES AND GRADE		DEAD LOAD = 10 psf					DEAD LOAD = 20 psf				
			2 × 4	2 × 6	2 × 8	2 × 10	2 × 12	2 × 4	2 × 6	2 × 8	2 × 10	2 × 12
			Maximum rafter spans[a]									
			(feet - inches)	(feet - inches)	(feet - inches)	(feet - inches)	(feet - inches)	(feet - inches)	(feet - inches)	(feet - inches)	(feet - inches)	(feet - inches)
12	Douglas fir-larch	SS	8-5	13-3	17-6	22-4	26-0	8-5	13-3	17-3	21-1	24-5
	Douglas fir-larch	#1	8-2	12-0	15-3	18-7	21-7	7-7	11-2	14-1	17-3	20-0
	Douglas fir-larch	#2	7-10	11-5	14-5	17-8	20-5	7-3	10-7	13-4	16-4	18-11
	Douglas fir-larch	#3	6-0	8-9	11-0	13-6	15-7	5-6	8-1	10-3	12-6	14-6
	Hem-fir	SS	8-0	12-6	16-6	21-1	25-6	8-0	12-6	16-6	20-4	23-7
	Hem-fir	#1	7-10	11-10	15-0	18-4	21-3	7-6	11-0	13-11	17-0	19-9
	Hem-fir	#2	7-5	11-1	14-0	17-2	19-11	7-0	10-3	13-0	15-10	18-5
	Hem-fir	#3	5-10	8-6	10-9	13-2	15-3	5-5	7-10	10-0	12-2	14-1
	Southern pine	SS	8-4	13-1	17-2	21-11	Note b	8-4	13-1	17-2	21-5	25-3
	Southern pine	#1	8-0	12-3	15-6	18-2	21-7	7-7	11-4	14-5	16-10	20-0
	Southern pine	#2	7-0	10-6	13-4	15-10	18-8	6-6	9-9	12-4	14-8	17-3
	Southern pine	#3	5-5	8-0	10-1	12-3	14-6	5-0	7-5	9-4	11-4	13-5
	Spruce-pine-fir	SS	7-10	12-3	16-2	20-8	24-1	7-10	12-3	15-9	19-3	22-4
	Spruce-pine-fir	#1	7-8	11-3	14-3	17-5	20-2	7-1	10-5	13-2	16-1	18-8
	Spruce-pine-fir	#2	7-8	11-3	14-3	17-5	20-2	7-1	10-5	13-2	16-1	18-8
	Spruce-pine-fir	#3	5-10	8-6	10-9	13-2	15-3	5-5	7-10	10-0	12-2	14-1
16	Douglas fir-larch	SS	7-8	12-1	15-11	19-9	22-10	7-8	11-10	14-11	18-3	21-2
	Douglas fir-larch	#1	7-1	10-5	13-2	16-1	18-8	6-7	9-8	12-2	14-11	17-3
	Douglas fir-larch	#2	6-9	9-10	12-6	15-3	17-9	6-3	9-2	11-7	14-2	16-5
	Douglas fir-larch	#3	5-2	7-7	9-7	11-18	13-6	4-9	7-0	8-10	10-10	12-6
	Hem-fir	SS	7-3	11-5	15-0	19-1	22-1	7-3	11-5	14-5	17-8	20-5
	Hem-fir	#1	7-0	10-3	13-0	15-11	18-5	6-6	9-6	12-1	14-9	17-1
	Hem-fir	#2	6-7	9-7	12-2	14-10	17-3	6-1	8-11	11-3	13-9	15-11
	Hem-fir	#3	5-0	7-4	9-4	11-5	13-2	4-8	6-10	8-8	10-6	12-3
	Southern pine	SS	7-6	11-10	15-7	19-11	23-7	7-6	11-10	15-7	18-6	21-10
	Southern pine	#1	7-1	10-7	13-5	15-9	18-8	6-7	9-10	12-5	14-7	17-3
	Southern pine	#2	6-1	9-2	11-7	13-9	16-2	5-8	8-5	10-9	12-9	15-0
	Southern pine	#3	4-8	6-11	8-9	10-7	12-6	4-4	6-5	8-1	9-10	11-7
	Spruce-pine-fir	SS	7-1	11-2	14-8	18-0	20-11	7-1	10-9	13-8	15-11	19-4
	Spruce-pine-fir	#1	6-8	9-9	12-4	15-1	17-6	6-2	9-0	11-5	13-11	16-2
	Spruce-pine-fir	#2	6-8	9-9	12-4	15-1	17-6	6-2	9-0	11-5	13-11	16-2
	Spruce-pine-fir	#3	5-0	7-4	9-4	11-5	13-2	4-8	6-10	8-8	10-6	12-3
19.2	Douglas fir-larch	SS	7-3	11-4	14-9	18-0	20-11	7-3	10-9	13-8	16-8	19-4
	Douglas fir-larch	#1	6-6	9-6	12-0	14-8	17-1	6-0	8-10	11-2	13-7	15-9
	Douglas fir-larch	#2	6-2	9-0	11-5	13-11	16-2	5-8	8-4	10-9	12-11	15-0
	Douglas fir-larch	#3	4-8	6-11	8-9	10-8	12-4	4-4	6-4	8-1	9-10	11-5
	Hem-fir	SS	6-10	10-9	14-2	17-5	20-2	6-10	10-5	13-2	16-1	18-8
	Hem-fir	#1	6-5	9-5	11-11	14-6	16-10	8-11	8-8	11-0	13-5	15-7
	Hem-fir	#2	6-0	8-9	11-1	13-7	15-9	5-7	8-1	10-3	12-7	14-7
	Hem-fir	#3	4-7	6-9	8-6	10-5	12-1	4-3	6-3	7-11	9-7	11-2

(continued)

TABLE R802.5.1(4)—continued
RAFTER SPANS FOR COMMON LUMBER SPECIES
(Ground snow load = 50 psf, ceiling not attached to rafters, L/Δ = 180)

RAFTER SPACING (inches)	SPECIES AND GRADE		DEAD LOAD = 10 psf					DEAD LOAD = 20 psf				
			2 × 4	2 × 6	2 × 8	2 × 10	2 × 12	2 × 4	2 × 6	2 × 8	2 × 10	2 × 12
			Maximum rafter spans[a]									
			(feet - inches)	(feet - inches)	(feet - inches)	(feet - inches)	(feet - inches)	(feet - inches)	(feet - inches)	(feet - inches)	(feet - inches)	(feet - inches)
19.2	Southern pine	SS	7-1	11-2	14-8	18-3	21-7	7-1	11-2	14-2	16-11	20-0
	Southern pine	#1	6-6	9-8	12-3	14-4	17-1	6-0	9-0	11-4	13-4	15-9
	Southern pine	#2	5-7	8-4	10-7	12-6	14-9	5-2	7-9	9-9	11-7	13-8
	Southern pine	#3	4-3	6-4	8-0	9-8	11-5	4-0	5-10	7-4	8-11	10-7
	Spruce-pine-fir	SS	6-8	10-6	13-5	16-5	19-1	6-8	9-10	12-5	15-3	17-8
	Spruce-pine-fir	#1	6-1	8-11	11-3	13-9	15-11	5-7	8-3	10-5	12-9	14-9
	Spruce-pine-fir	#2	6-1	8-11	11-3	13-9	15-11	5-7	8-3	10-5	12-9	14-9
	Spruce-pine-fir	#3	4-7	6-9	8-6	10-5	12-1	4-3	6-3	7-11	9-7	11-2
24	Douglas fir-larch	SS	6-8	10-5	13-2	16-1	18-8	6-7	9-8	12-2	14-11	17-3
	Douglas fir-larch	#1	5-10	8-6	10-9	13-2	15-3	5-5	7-10	10-0	12-2	14-1
	Douglas fir-larch	#2	5-6	8-1	10-3	12-6	14-6	5-1	7-6	9-5	11-7	13-5
	Douglas fir-larch	#3	4-3	6-2	7-10	9-6	11-1	3-11	5-8	7-3	8-10	10-3
	Hem-fir	SS	6-4	9-11	12-9	15-7	18-0	6-4	9-4	11-9	14-5	16-8
	Hem-fir	#1	5-9	8-5	10-8	13-0	15-1	8-4	7-9	9-10	12-0	13-11
	Hem-fir	#2	5-4	7-10	9-11	12-1	14-1	4-11	7-3	9-2	11-3	13-0
	Hem-fir	#3	4-1	6-0	7-7	9-4	10-9	3-10	5-7	7-1	8-7	10-0
	Southern pine	SS	6-7	10-4	13-8	16-4	19-3	6-7	10-0	12-8	15-2	17-10
	Southern pine	#1	5-10	8-8	11-0	12-10	15-3	5-5	8-0	10-2	11-11	14-1
	Southern pine	#2	5-0	7-5	9-5	11-3	13-2	4-7	6-11	8-9	10-5	12-3
	Southern pine	#3	3-10	5-8	7-1	8-8	10-3	3-6	5-3	6-7	8-0	9-6
	Spruce-pine-fir	SS	6-2	9-6	12-0	14-8	17-1	6-0	8-10	11-2	13-7	15-9
	Spruce-pine-fir	#1	5-5	7-11	10-1	12-4	14-3	5-0	7-4	9-4	11-5	13-2
	Spruce-pine-fir	#2	5-5	7-11	10-1	12-4	14-3	5-0	7-4	9-4	11-5	13-2
	Spruce-pine-fir	#3	4-1	6-0	7-7	9-4	10-9	3-10	5-7	7-1	8-7	10-0

Check sources for availability of lumber in lengths greater than 20 feet.

For SI: 1 inch = 25.4 mm, 1 foot = 304.8 mm, 1 pound per square foot = 0.0479 kPa

a. The tabulated rafter spans assume that ceiling joists are located at the bottom of the attic space or that some other method of resisting the outward push of the rafters on the bearing walls, such as rafter ties, is provided at that location. Where ceiling joists or rafter ties are located higher in the attic space, the rafter spans shall be multiplied by the following factors:

H_C/H_R	Rafter Span Adjustment Factor
1/3	0.67
1/4	0.76
1/5	0.83
1/6	0.90
1/7.5 or less	1.00

where:

H_C = Height of ceiling joists or rafter ties measured vertically above the top of the rafter support walls.

H_R = Height of roof ridge measured vertically above the top of the rafter support walls.

b. Span exceeds 26 feet in length.

TABLE R802.5.1(5)
RAFTER SPANS FOR COMMON LUMBER SPECIES
(Ground snow load = 30 psf, ceiling attached to rafters, L/Δ = 240)

RAFTER SPACING (inches)	SPECIES AND GRADE		DEAD LOAD = 10 psf					DEAD LOAD = 20 psf				
			2 × 4	2 × 6	2 × 8	2 × 10	2 × 12	2 × 4	2 × 6	2 × 8	2 × 10	2 × 12
			Maximum rafter spans[a]									
			(feet - inches)	(feet - inches)	(feet - inches)	(feet - inches)	(feet - inches)	(feet - inches)	(feet - inches)	(feet - inches)	(feet - inches)	(feet - inches)
12	Douglas fir-larch	SS	9-1	14-4	18-10	24-1	Note b	9-1	14-4	18-10	24-1	Note b
	Douglas fir-larch	#1	8-9	13-9	18-2	22-9	Note b	8-9	13-2	16-8	20-4	23-7
	Douglas fir-larch	#2	8-7	13-6	17-8	21-7	25-1	8-6	12-6	15-10	19-4	22-5
	Douglas fir-larch	#3	7-3	10-8	13-6	16-6	19-2	6-6	9-6	12-1	14-9	17-1
	Hem-fir	SS	8-7	13-6	17-10	22-9	Note b	8-7	13-6	17-10	22-9	Note b
	Hem-fir	#1	8-5	13-3	17-5	22-3	26-0	8-5	13-0	16-6	20-1	23-4
	Hem-fir	#2	8-0	12-7	16-7	21-0	24-4	8-0	12-2	15-4	18-9	21-9
	Hem-fir	#3	7-1	10-5	13-2	16-1	18-8	6-4	9-4	11-9	14-5	16-8
	Southern pine	SS	8-11	14-1	18-6	23-8	Note b	8-11	14-1	18-6	23-8	Note b
	Southern pine	#1	8-7	13-6	17-10	22-3	Note b	8-7	13-5	17-0	19-11	23-7
	Southern pine	#2	8-3	12-11	16-4	19-5	22-10	7-8	11-7	14-8	17-4	20-5
	Southern pine	#3	6-7	9-9	12-4	15-0	17-9	5-11	8-9	11-0	13-5	15-10
	Spruce-pine-fir	SS	8-5	13-3	17-5	22-3	Note b	8-5	13-3	17-5	22-3	Note b
	Spruce-pine-fir	#1	8-3	12-11	17-0	21-4	24-8	8-3	12-4	15-7	19-1	22-1
	Spruce-pine-fir	#2	8-3	12-11	17-0	21-4	24-8	8-3	12-4	15-7	19-1	22-1
	Spruce-pine-fir	#3	7-1	10-5	13-2	16-1	18-8	6-4	9-4	11-9	14-5	16-8
16	Douglas fir-larch	SS	8-3	13-0	17-2	21-10	Note b	8-3	13-0	17-2	21-7	25-1
	Douglas fir-larch	#1	8-0	12-6	16-2	19-9	22-10	7-10	11-5	14-5	17-8	20-5
	Douglas fir-larch	#2	7-10	12-1	15-4	18-9	21-8	7-5	10-10	13-8	16-9	19-5
	Douglas fir-larch	#3	6-4	9-3	11-8	14-3	16-7	5-8	8-3	10-6	12-9	14-10
	Hem-fir	SS	7-10	12-3	16-2	20-8	25-1	7-10	12-3	16-2	20-8	24-2
	Hem-fir	#1	7-8	12-0	15-10	19-6	22-7	7-8	11-3	14-3	17-5	20-2
	Hem-fir	#2	7-3	11-5	14-11	18-2	21-1	7-2	10-6	13-4	16-3	18-10
	Hem-fir	#3	6-2	9-0	11-5	13-11	16-2	5-6	8-1	10-3	12-6	14-6
	Southern pine	SS	8-1	12-9	16-10	21-6	Note b	8-1	12-9	16-10	21-6	25-11
	Southern pine	#1	7-10	12-3	16-2	19-3	22-10	7-10	11-7	14-9	17-3	20-5
	Southern pine	#2	7-6	11-2	14-2	16-10	19-10	6-8	10-0	12-8	15-1	17-9
	Southern pine	#3	5-9	8-6	10-8	13-0	15-4	5-2	7-7	9-7	11-7	13-9
	Spruce-pine-fir	SS	7-8	12-0	15-10	20-2	24-7	7-8	12-0	15-10	19-9	22-10
	Spruce-pine-fir	#1	7-6	11-9	15-1	18-5	21-5	7-3	10-8	13-6	16-6	19-2
	Spruce-pine-fir	#2	7-6	11-9	15-1	18-5	21-5	7-3	10-8	13-6	16-6	19-2
	Spruce-pine-fir	#3	6-2	9-0	11-5	13-11	16-2	5-6	8-1	10-3	12-6	14-6
19.2	Douglas fir-larch	SS	7-9	12-3	16-1	20-7	25-0	7-9	12-3	16-1	19-9	22-10
	Douglas fir-larch	#1	7-6	11-8	14-9	18-0	20-11	7-1	10-5	13-2	16-1	18-8
	Douglas fir-larch	#2	7-4	11-0	14-0	17-1	19-10	6-9	9-1	12-6	15-3	17-9
	Douglas fir-larch	#3	5-9	8-5	10-8	13-1	15-2	5-2	7-7	9-7	11-8	13-6
	Hem-fir	SS	7-4	11-7	15-3	19-5	23-7	7-4	11-7	15-3	19-1	22-1
	Hem-fir	#1	7-2	11-4	14-7	17-9	20-7	7-0	16-3	13-0	15-11	18-5
	Hem-fir	#2	6-10	10-9	13-7	16-7	19-3	6-7	9-7	12-2	14-10	17-3
	Hem-fir	#3	5-7	8-3	10-5	12-9	14-9	5-0	7-4	9-4	11-5	13-2

(continued)

2845

TABLE R802.5.1(5)—continued
RAFTER SPANS FOR COMMON LUMBER SPECIES
(Ground snow load = 30 psf, ceiling attached to rafters, L/Δ = 240)

RAFTER SPACING (inches)	SPECIES AND GRADE		DEAD LOAD = 10 psf					DEAD LOAD = 20 psf				
			2 × 4	2 × 6	2 × 8	2 × 10	2 × 12	2 × 4	2 × 6	2 × 8	2 × 10	2 × 12
			Maximum rafter spans[a]									
			(feet - inches)	(feet - inches)	(feet - inches)	(feet - inches)	(feet - inches)	(feet - inches)	(feet - inches)	(feet - inches)	(feet - inches)	(feet - inches)
19.2	Southern pine	SS	7-8	12-0	15-10	20-2	24-7	7-8	12-0	15-10	20-0	23-7
	Southern pine	#1	7-4	11-7	15-1	17-7	20-11	7-1	10-7	13-5	15-9	18-8
	Southern pine	#2	6-10	10-2	12-11	15-4	18-1	6-1	9-2	11-7	13-9	16-2
	Southern pine	#3	5-3	7-9	9-9	11-10	14-0	4-8	6-11	8-9	10-7	12-6
	Spruce-pine-fir	SS	7-2	11-4	14-11	19-0	23-1	7-2	11-4	14-9	18-0	20-11
	Spruce-pine-fir	#1	7-0	10-11	13-9	16-10	19-6	6-8	9-9	12-4	15-1	17-6
	Spruce-pine-fir	#2	7-0	10-11	13-9	16-10	19-6	6-8	9-9	12-4	15-1	17-6
	Spruce-pine-fir	#3	5-7	8-3	10-5	12-9	14-9	5-0	7-4	9-4	11-5	13-2
24	Douglas fir-larch	SS	7-3	11-4	15-0	19-1	22-10	7-3	11-4	14-5	17-8	20-5
	Douglas fir-larch	#1	7-0	10-5	13-2	16-1	18-8	6-4	9-4	11-9	14-5	16-8
	Douglas fir-larch	#2	6-9	9-10	12-6	15-3	17-9	6-0	8-10	11-2	13-8	15-10
	Douglas fir-larch	#3	5-2	7-7	9-7	11-8	13-6	4-7	6-9	8-7	10-5	12-1
	Hem-fir	SS	6-10	10-9	14-2	18-0	21-11	6-10	10-9	13-11	17-0	19-9
	Hem-fir	#1	6-8	10-3	13-0	15-11	18-5	6-3	9-2	11-8	14-3	16-6
	Hem-fir	#2	6-4	9-7	12-2	14-10	17-3	5-10	8-7	10-10	13-3	15-5
	Hem-fir	#3	5-0	7-4	9-4	11-5	13-2	4-6	6-7	8-4	10-2	11-10
	Southern pine	SS	7-1	11-2	14-8	18-9	22-10	7-1	11-2	14-8	17-11	21-2
	Southern pine	#1	6-10	10-7	13-5	15-9	18-8	6-4	9-6	12-0	14-1	16-8
	Southern pine	#2	6-1	9-2	11-7	13-9	16-2	5-5	8-2	10-4	12-3	14-6
	Southern pine	#3	4-8	6-11	8-9	10-7	12-6	4-2	6-2	7-10	9-6	11-2
	Spruce-pine-fir	SS	6-8	10-6	13-10	17-8	20-11	6-8	10-5	13-2	16-1	18-8
	Spruce-pine-fir	#1	6-6	9-9	12-4	15-1	17-6	5-11	8-8	11-0	13-6	15-7
	Spruce-pine-fir	#2	6-6	9-9	12-4	15-1	17-6	5-11	8-8	11-0	13-6	15-7
	Spruce-pine-fir	#3	5-0	7-4	9-4	11-5	13-2	4-6	6-7	8-4	10-2	11-10

Check sources for availability of lumber in lengths greater than 20 feet.

For SI: 1 inch = 25.4 mm, 1 foot = 304.8 mm, 1 pound per square foot = 0.0479 kPa.

a. The tabulated rafter spans assume that ceiling joists are located at the bottom of the attic space or that some other method of resisting the outward push of the rafters on the bearing walls, such as rafter ties, is provided at that location. Where ceiling joists or rafter ties are located higher in the attic space, the rafter spans shall be multiplied by the following factors:

H_C/H_R	Rafter Span Adjustment Factor
1/3	0.67
1/4	0.76
1/5	0.83
1/6	0.90
1/7.5 or less	1.00

where:

H_C = Height of ceiling joists or rafter ties measured vertically above the top of the rafter support walls.

H_R = Height of roof ridge measured vertically above the top of the rafter support walls.

b. Span exceeds 26 feet in length.

TABLE R802.5.1(6)
RAFTER SPANS FOR COMMON LUMBER SPECIES
(Ground snow load = 50 psf, ceiling attached to rafters, L/Δ = 240)

RAFTER SPACING (inches)	SPECIES AND GRADE		DEAD LOAD = 10 psf					DEAD LOAD = 20 psf				
			2 × 4	2 × 6	2 × 8	2 × 10	2 × 12	2 × 4	2 × 6	2 × 8	2 × 10	2 × 12
			Maximum rafter spans[a]									
			(feet-inches)	(feet-inches)	(feet-inches)	(feet-inches)	(feet-inches)	(feet-inches)	(feet-inches)	(feet-inches)	(feet-inches)	(feet-inches)
12	Douglas fir-larch	SS	7-8	12-1	15-11	20-3	24-8	7-8	12-1	15-11	20-3	24-5
	Douglas fir-larch	#1	7-5	11-7	15-3	18-7	21-7	7-5	11-2	14-1	17-3	20-0
	Douglas fir-larch	#2	7-3	11-5	14-5	17-8	20-5	7-3	10-7	13-4	16-4	18-11
	Douglas fir-larch	#3	6-0	8-9	11-0	13-6	15-7	5-6	8-1	10-3	12-6	14-6
	Hem-fir	SS	7-3	11-5	15-0	19-2	23-4	7-3	11-5	15-0	19-2	23-4
	Hem-fir	#1	7-1	11-2	14-8	18-4	21-3	7-1	11-0	13-11	17-0	19-9
	Hem-fir	#2	6-9	10-8	14-0	17-2	19-11	6-9	10-3	13-0	15-10	18-5
	Hem-fir	#3	5-10	8-6	10-9	13-2	15-3	5-5	7-10	10-0	12-2	14-1
	Southern pine	SS	7-6	11-10	15-7	19-11	24-3	7-6	11-10	15-7	19-11	24-3
	Southern pine	#1	7-3	11-5	15-0	18-2	21-7	7-3	11-4	14-5	16-10	20-0
	Southern pine	#2	6-11	10-6	13-4	15-10	18-8	6-6	9-9	12-4	14-8	17-3
	Southern pine	#3	5-5	8-0	10-1	12-3	14-6	5-0	7-5	9-4	11-4	13-5
	Spruce-pine-fir	SS	7-1	11-2	14-8	18-9	22-10	7-1	11-2	14-8	18-9	22-4
	Spruce-pine-fir	#1	6-11	10-11	14-3	17-5	20-2	6-11	10-5	13-2	16-1	18-8
	Spruce-pine-fir	#2	6-11	10-11	14-3	17-5	20-2	6-11	10-5	13-2	16-1	18-8
	Spruce-pine-fir	#3	5-10	8-6	10-9	13-2	15-3	5-5	7-10	10-0	12-2	14-1
16	Douglas fir-larch	SS	7-0	11-0	14-5	18-5	22-5	7-0	11-0	14-5	18-3	21-2
	Douglas fir-larch	#1	6-9	10-5	13-2	16-1	18-8	6-7	9-8	12-2	14-11	17-3
	Douglas fir-larch	#2	6-7	9-10	12-6	15-3	17-9	6-3	9-2	11-7	14-2	16-5
	Douglas fir-larch	#3	5-2	7-7	9-7	11-8	13-6	4-9	7-0	8-10	10-10	12-6
	Hem-fir	SS	6-7	10-4	13-8	17-5	21-2	6-7	10-4	13-8	17-5	20-5
	Hem-fir	#1	6-5	10-2	13-0	15-11	18-5	6-5	9-6	12-1	14-9	17-1
	Hem-fir	#2	6-2	9-7	12-2	14-10	17-3	6-1	8-11	11-3	13-9	15-11
	Hem-fir	#3	5-0	7-4	9-4	11-5	13-2	4-8	6-10	8-8	10-6	12-3
	Southern pine	SS	6-10	10-9	14-2	18-1	22-0	6-10	10-9	14-2	18-1	21-10
	Southern pine	#1	6-7	10-4	13-5	15-9	18-8	6-7	9-10	12-5	14-7	17-3
	Southern pine	#2	6-1	9-2	11-7	13-9	16-2	5-8	8-5	10-9	12-9	15-0
	Southern pine	#3	4-8	6-11	8-9	10-7	12-6	4-4	6-5	8-1	9-10	11-7
	Spruce-pine-fir	SS	6-5	10-2	13-4	17-0	20-9	6-5	10-2	13-4	16-8	19-4
	Spruce-pine-fir	#1	6-4	9-9	12-4	15-1	17-6	6-2	9-0	11-5	13-11	16-2
	Spruce-pine-fir	#2	6-4	9-9	12-4	15-1	17-6	6-2	9-0	11-5	13-11	16-2
	Spruce-pine-fir	#3	5-0	7-4	9-4	11-5	13-2	4-8	6-10	8-8	10-6	12-3
19.2	Douglas fir-larch	SS	6-7	10-4	13-7	17-4	20-11	6-7	10-4	13-7	16-8	19-4
	Douglas fir-larch	#1	6-4	9-6	12-0	14-8	17-1	6-0	8-10	11-2	13-7	15-9
	Douglas fir-larch	#2	6-2	9-0	11-5	13-11	16-2	5-8	8-4	10-7	12-11	15-0
	Douglas fir-larch	#3	4-8	6-11	8-9	10-8	12-4	4-4	6-4	8-1	9-10	11-5
	Hem-fir	SS	6-2	9-9	12-10	16-5	19-11	6-2	9-9	12-10	16-1	18-8
	Hem-fir	#1	6-1	9-5	11-11	14-6	16-10	5-11	8-8	11-0	13-5	15-7
	Hem-fir	#2	5-9	8-9	11-1	13-7	15-9	5-7	8-1	10-3	12-7	14-7
	Hem-fir	#3	4-7	6-9	8-6	10-5	12-1	4-3	6-3	7-11	9-7	11-2

(continued)

2847

TABLE R802.5.1(6)—continued
RAFTER SPANS FOR COMMON LUMBER SPECIES
(Ground snow load = 50 psf, ceiling attached to rafters, L/Δ = 240)

RAFTER SPACING (inches)	SPECIES AND GRADE		DEAD LOAD = 10 psf					DEAD LOAD = 20 psf				
			2 × 4	2 × 6	2 × 8	2 × 10	2 × 12	2 × 4	2 × 6	2 × 8	2 × 10	2 × 12
			Maximum rafter spans[a]									
			(feet-inches)	(feet-inches)	(feet-inches)	(feet-inches)	(feet-inches)	(feet-inches)	(feet-inches)	(feet-inches)	(feet-inches)	(feet-inches)
19.2	Southern pine	SS	6-5	10-2	13-4	17-0	20-9	6-5	10-2	13-4	16-11	20-0
	Southern pine	#1	6-2	9-8	12-3	14-4	17-1	6-0	9-0	11-4	13-4	15-9
	Southern pine	#2	5-7	8-4	10-7	12-6	14-9	5-2	7-9	9-9	11-7	13-8
	Southern pine	#3	4-3	6-4	8-0	9-8	11-5	4-0	5-10	7-4	8-11	10-7
	Spruce-pine-fir	SS	6-1	9-6	12-7	16-0	19-1	6-1	9-6	12-5	15-3	17-8
	Spruce-pine-fir	#1	5-11	8-11	11-3	13-9	15-11	5-7	8-3	10-5	12-9	14-9
	Spruce-pine-fir	#2	5-11	8-11	11-3	13-9	15-11	5-7	8-3	10-5	12-9	14-9
	Spruce-pine-fir	#3	4-7	6-9	8-6	10-5	12-1	4-3	6-3	7-11	9-7	11-2
24	Douglas fir-larch	SS	6-1	9-7	12-7	16-1	18-8	6-1	9-7	12-2	14-11	17-3
	Douglas fir-larch	#1	5-10	8-6	10-9	13-2	15-3	5-5	7-10	10-0	12-2	14-1
	Douglas fir-larch	#2	5-6	8-1	10-3	12-6	14-6	5-1	7-6	9-5	11-7	13-5
	Douglas fir-larch	#3	4-3	6-2	7-10	9-6	11-1	3-11	5-8	7-3	8-10	10-3
	Hem-fir	SS	5-9	9-1	11-11	15-2	18-0	5-9	9-1	11-9	14-5	15-11
	Hem-fir	#1	5-8	8-5	10-8	13-0	15-1	5-4	7-9	9-10	12-0	13-11
	Hem-fir	#2	5-4	7-10	9-11	12-1	14-1	4-11	7-3	9-2	11-3	13-0
	Hem-fir	#3	4-1	6-0	7-7	9-4	10-9	3-10	5-7	7-1	8-7	10-0
	Southern pine	SS	6-0	9-5	12-5	15-10	19-3	6-0	9-5	12-5	15-2	17-10
	Southern pine	#1	5-9	8-8	11-0	12-10	15-3	5-5	8-0	10-2	11-11	14-1
	Southern pine	#2	5-0	7-5	9-5	11-3	13-2	4-7	6-11	8-9	10-5	12-3
	Southern pine	#3	3-10	5-8	7-1	8-8	10-3	3-6	5-3	6-7	8-0	9-6
	Spruce-pine-fir	SS	5-8	8-10	11-8	14-8	17-1	5-8	8-10	11-2	13-7	15-9
	Spruce-pine-fir	#1	5-5	7-11	10-1	12-4	14-3	5-0	7-4	9-4	11-5	13-2
	Spruce-pine-fir	#2	5-5	7-11	10-1	12-4	14-3	5-0	7-4	9-4	11-5	13-2
	Spruce-pine-fir	#3	4-1	6-0	7-7	9-4	10-9	3-10	5-7	7-1	8-7	10-0

Check sources for availability of lumber in lengths greater than 20 feet.

For SI: 1 inch = 25.4 mm, 1 foot = 304.8 mm, 1 pound per square foot = 0.0479 kPa.

a. The tabulated rafter spans assume that ceiling joists are located at the bottom of the attic space or that some other method of resisting the outward push of the rafters on the bearing walls, such as rafter ties, is provided at that location. Where ceiling joists or rafter ties are located higher in the attic space, the rafter spans shall be multiplied by the following factors:

H_C/H_R	Rafter Span Adjustment Factor
1/3	0.67
1/4	0.76
1/5	0.83
1/6	0.90
1/7.5 or less	1.00

where:

H_C = Height of ceiling joists or rafter ties measured vertically above the top of the rafter support walls.

H_R = Height of roof ridge measured vertically above the top of the rafter support walls.

TABLE R802.5.1(7)
RAFTER SPANS FOR 70 PSF GROUND SNOW LOAD
(Ceiling not attached to rafters, L/Δ = 180)

RAFTER SPACING (inches)	SPECIES AND GRADE		DEAD LOAD = 10 psf					DEAD LOAD = 20 psf				
			2 × 4	2 × 6	2 × 8	2 × 10	2 × 12	2 × 4	2 × 6	2 × 8	2 × 10	2 × 12
			Maximum Rafter Spans[a]									
			(feet-inches)	(feet-inches)	(feet-inches)	(feet-inches)	(feet-inches)	(feet-inches)	(feet-inches)	(feet-inches)	(feet-inches)	(feet-inches)
12	Douglas fir-larch	SS	7-7	11-10	15-8	19-9	22-10	7-7	11-10	15-3	18-7	21-7
	Douglas fir-larch	#1	7-1	10-5	13-2	16-1	18-8	6-8	9-10	12-5	15-2	17-7
	Douglas fir-larch	#2	6-9	9-10	12-6	15-3	17-9	6-4	9-4	11-9	14-5	16-8
	Douglas fir-larch	#3	5-2	7-7	9-7	11-8	13-6	4-10	7-1	9-0	11-0	12-9
	Hem-fir	SS	7-2	11-3	14-9	18-10	22-1	7-2	11-3	14-8	18-0	20-10
	Hem-fir	#1	7-0	10-3	13-0	15-11	18-5	6-7	9-8	12-3	15-0	17-5
	Hem-fir	#2	6-7	9-7	12-2	14-10	17-3	6-2	9-1	11-5	14-0	16-3
	Hem-fir	#3	5-0	7-4	9-4	11-5	13-2	4-9	6-11	8-9	10-9	12-5
	Southern pine	SS	7-5	11-8	15-4	19-7	23-7	7-5	11-8	15-4	18-10	22-3
	Southern pine	#1	7-1	10-7	13-5	15-9	18-8	6-9	10-0	12-8	14-10	17-7
	Southern pine	#2	6-1	9-2	11-7	13-9	16-2	5-9	8-7	10-11	12-11	15-3
	Southern pine	#3	4-8	6-11	8-9	10-7	12-6	4-5	6-6	8-3	10-0	11-10
	Spruce-pine-fir	SS	7-0	11-0	14-6	18-0	20-11	7-0	11-0	13-11	17-0	19-8
	Spruce-pine-fir	#1	6-8	9-9	12-4	15-1	17-6	6-3	9-2	11-8	14-2	16-6
	Spruce-pine-fir	#2	6-8	9-9	12-4	15-1	17-6	6-3	9-2	11-8	14-2	16-6
	Spruce-pine-fir	#3	5-0	7-4	9-4	11-5	13-2	4-9	6-11	8-9	10-9	12-5
16	Douglas fir-larch	SS	6-10	10-9	14-0	17-1	19-10	6-10	10-5	13-2	16-1	18-8
	Douglas fir-larch	#1	6-2	9-0	11-5	13-11	16-2	5-10	8-6	10-9	13-2	15-3
	Douglas fir-larch	#2	5-10	8-7	10-10	13-3	15-4	5-6	8-1	10-3	12-6	14-6
	Douglas fir-larch	#3	4-6	6-6	8-3	10-1	11-9	4-3	6-2	7-10	9-6	11-1
	Hem-fir	SS	6-6	10-2	13-5	16-6	19-2	6-6	10-1	12-9	15-7	18-0
	Hem-fir	#1	6-1	8-11	11-3	13-9	16-0	5-9	8-5	10-8	13-0	15-1
	Hem-fir	#2	5-8	8-4	10-6	12-10	14-11	5-4	7-10	9-11	12-1	14-1
	Hem-fir	#3	4-4	6-4	8-1	9-10	11-5	4-1	6-0	7-7	9-4	10-9
	Southern pine	SS	6-9	10-7	14-0	17-4	20-5	6-9	10-7	13-9	16-4	19-3
	Southern pine	#1	6-2	9-2	11-8	13-8	16-2	5-10	8-8	11-0	12-10	15-3
	Southern pine	#2	5-3	7-11	10-0	11-11	14-0	5-0	7-5	9-5	11-3	13-2
	Southern pine	#3	4-1	6-0	7-7	9-2	10-10	3-10	5-8	7-1	8-8	10-3
	Spruce-pine-fir	SS	6-4	10-0	12-9	15-7	18-1	6-4	9-6	12-0	14-8	17-1
	Spruce-pine-fir	#1	5-9	8-5	10-8	13-1	15-2	5-5	7-11	10-1	12-4	14-3
	Spruce-pine-fir	#2	5-9	8-5	10-8	13-1	15-2	5-5	7-11	10-1	12-4	14-3
	Spruce-pine-fir	#3	4-4	6-4	8-1	9-10	11-5	4-1	6-0	7-7	9-4	10-9
19.2	Douglas fir-larch	SS	6-6	10-1	12-9	15-7	18-1	6-6	9-6	12-0	14-8	17-1
	Douglas fir-larch	#1	5-7	8-3	10-5	12-9	14-9	5-4	7-9	9-10	12-0	13-11
	Douglas fir-larch	#2	5-4	7-10	9-11	12-1	14-0	5-0	7-4	9-4	11-5	13-2
	Douglas fir-larch	#3	4-1	6-0	7-7	9-3	10-8	3-10	5-7	7-1	8-8	10-1
	Hem-fir	SS	6-1	9-7	12-4	15-1	17-4	6-1	9-2	11-8	14-2	15-5
	Hem-fir	#1	5-7	8-2	10-3	12-7	14-7	5-3	7-8	9-8	11-10	13-9
	Hem-fir	#2	5-2	7-7	9-7	11-9	13-7	4-11	7-2	9-1	11-1	12-10
	Hem-fir	#3	4-0	5-10	7-4	9-0	10-5	3-9	5-6	6-11	8-6	9-10

(continued)

2849

TABLE R802.5.1(7)—continued
RAFTER SPANS FOR 70 PSF GROUND SNOW LOAD
(Ceiling not attached to rafters, L/Δ = 180)

RAFTER SPACING (inches)	SPECIES AND GRADE		DEAD LOAD = 10 psf					DEAD LOAD = 20 psf				
			2 × 4	2 × 6	2 × 8	2 × 10	2 × 12	2 × 4	2 × 6	2 × 8	2 × 10	2 × 12
			Maximum Rafter Spans[a]									
			(feet-inches)	(feet-inches)	(feet-inches)	(feet-inches)	(feet-inches)	(feet-inches)	(feet-inches)	(feet-inches)	(feet-inches)	(feet-inches)
19.2	Southern pine	SS	6-4	10-0	13-2	15-10	18-8	6-4	9-10	12-6	14-11	17-7
	Southern pine	#1	5-8	8-5	10-8	12-5	14-9	5-4	7-11	10-0	11-9	13-11
	Southern pine	#2	4-10	7-3	9-2	10-10	12-9	4-6	6-10	8-8	10-3	12-1
	Southern pine	#3	3-8	5-6	6-11	8-4	9-11	3-6	5-2	6-6	7-11	9-4
	Spruce-pine-fir	SS	6-0	9-2	11-8	14-3	16-6	5-11	8-8	11-0	13-5	15-7
	Spruce-pine-fir	#1	5-3	7-8	9-9	11-11	13-10	5-0	7-3	9-2	11-3	13-0
	Spruce-pine-fir	#2	5-3	7-8	9-9	11-11	13-10	5-0	7-3	9-2	11-3	13-0
	Spruce-pine-fir	#3	4-0	5-10	7-4	9-0	10-5	3-9	5-6	6-11	8-6	9-10
24	Douglas fir-larch	SS	6-0	9-0	11-5	13-11	16-2	5-10	8-6	10-9	13-2	15-3
	Douglas fir-larch	#1	5-0	7-4	9-4	11-5	13-2	4-9	6-11	8-9	10-9	12-5
	Douglas fir-larch	#2	4-9	7-0	8-10	10-10	12-6	4-6	6-7	8-4	10-2	11-10
	Douglas fir-larch	#3	3-8	5-4	6-9	8-3	9-7	3-5	5-0	6-4	7-9	9-10
	Hem-fir	SS	5-8	8-8	11-0	13-6	13-11	5-7	8-3	10-5	12-4	12-4
	Hem-fir	#1	5-0	7-3	9-2	11-3	13-0	4-8	6-10	8-8	10-7	12-4
	Hem-fir	#2	4-8	6-9	8-7	10-6	12-2	4-4	6-5	8-1	9-11	11-6
	Hem-fir	#3	3-7	5-2	6-7	8-1	9-4	3-4	4-11	6-3	7-7	8-10
	Southern pine	SS	5-11	9-3	11-11	14-2	16-8	5-11	8-10	11-2	13-4	15-9
	Southern pine	#1	5-0	7-6	9-6	11-1	13-2	4-9	7-1	9-0	10-6	12-5
	Southern pine	#2	4-4	6-5	8-2	9-9	11-5	4-1	6-1	7-9	9-2	10-9
	Southern pine	#3	3-4	4-11	6-2	7-6	8-10	3-1	4-7	5-10	7-1	8-4
	Spruce-pine-fir	SS	5-6	8-3	10-5	12-9	14-9	5-4	7-9	9-10	12-0	12-11
	Spruce-pine-fir	#1	4-8	6-11	8-9	10-8	12-4	4-5	6-6	8-3	10-0	11-8
	Spruce-pine-fir	#2	4-8	6-11	8-9	10-8	12-4	4-5	6-6	8-3	10-0	11-8
	Spruce-pine-fir	#3	3-7	5-2	6-7	8-1	9-4	3-4	4-11	6-3	7-7	8-10

Check sources for availability of lumber in lengths greater than 20 feet.

For SI: 1 inch = 25.4 mm, 1 foot = 304.8 mm, 1 pound per square foot = 0.0479 kPa.

a. The tabulated rafter spans assume that ceiling joists are located at the bottom of the attic space or that some other method of resisting the outward push of the rafters on the bearing walls, such as rafter ties, is provided at that location. Where ceiling joists or rafter ties are located higher in the attic space, the rafter spans shall be multiplied by the following factors:

H_C/H_R	Rafter Span Adjustment Factor
1/3	0.67
1/4	0.76
1/5	0.83
1/6	0.90
1/7.5 or less	1.00

where:

H_C = Height of ceiling joists or rafter ties measured vertically above the top of the rafter support walls.

H_R = Height of roof ridge measured vertically above the top of the rafter support walls.

TABLE R802.5.1(8)
RAFTER SPANS FOR 70 PSF GROUND SNOW LOAD
(Ceiling attached to rafters, L/Δ = 240)

RAFTER SPACING (inches)	SPECIES AND GRADE		DEAD LOAD = 10 psf					DEAD LOAD = 20 psf				
			2 × 4	2 × 6	2 × 8	2 × 10	2 × 12	2 × 4	2 × 6	2 × 8	2 × 10	2 × 12
			Maximum rafter spans[a]									
			(feet - inches)	(feet - inches)	(feet - inches)	(feet - inches)	(feet - inches)	(feet - inches)	(feet - inches)	(feet - inches)	(feet - inches)	(feet - inches)
12	Douglas fir-larch	SS	6-10	10-9	14-3	18-2	22-1	6-10	10-9	14-3	18-2	21-7
	Douglas fir-larch	#1	6-7	10-5	13-2	16-1	18-8	6-7	9-10	12-5	15-2	17-7
	Douglas fir-larch	#2	6-6	9-10	12-6	15-3	17-9	6-4	9-4	11-9	14-5	16-8
	Douglas fir-larch	#3	5-2	7-7	9-7	11-8	13-6	4-10	7-1	9-0	11-0	12-9
	Hem-fir	SS	6-6	10-2	13-5	17-2	20-10	6-6	10-2	13-5	17-2	20-10
	Hem-fir	#1	6-4	10-0	13-0	15-11	18-5	6-4	9-8	12-3	15-0	17-5
	Hem-fir	#2	6-1	9-6	12-2	14-10	17-3	6-1	9-1	11-5	14-0	16-3
	Hem-fir	#3	5-0	7-4	9-4	11-5	13-2	4-9	6-11	8-9	10-9	12-5
	Southern pine	SS	6-9	10-7	14-0	17-10	21-8	6-9	10-7	14-0	17-10	21-8
	Southern pine	#1	6-6	10-2	13-5	15-9	18-8	6-6	10-0	12-8	14-10	17-7
	Southern pine	#2	6-1	9-2	11-7	13-9	16-2	5-9	8-7	10-11	12-11	15-3
	Southern pine	#3	4-8	6-11	8-9	10-7	12-6	4-5	6-6	8-3	10-0	11-10
	Spruce-pine-fir	SS	6-4	10-0	13-2	16-9	20-5	6-4	10-0	13-2	16-9	19-8
	Spruce-pine-fir	#1	6-2	9-9	12-4	15-1	17-6	6-2	9-2	11-8	14-2	16-6
	Spruce-pine-fir	#2	6-2	9-9	12-4	15-1	17-6	6-2	9-2	11-8	14-2	16-6
	Spruce-pine-fir	#3	5-0	7-4	9-4	11-5	13-2	4-9	6-11	8-9	10-9	12-5
16	Douglas fir-larch	SS	6-3	9-10	12-11	16-6	19-10	6-3	9-10	12-11	16-1	18-8
	Douglas fir-larch	#1	6-0	9-0	11-5	13-11	16-2	5-10	8-6	10-9	13-2	15-3
	Douglas fir-larch	#2	5-10	8-7	10-10	13-3	15-4	5-6	8-1	10-3	12-6	14-6
	Douglas fir-larch	#3	4-6	6-6	8-3	10-1	11-9	4-3	6-2	7-10	9-6	11-1
	Hem-fir	SS	5-11	9-3	12-2	15-7	18-11	5-11	9-3	12-2	15-7	18-0
	Hem-fir	#1	5-9	8-11	11-3	13-9	16-0	5-9	8-5	10-8	13-0	15-1
	Hem-fir	#2	5-6	8-4	10-6	12-10	14-11	5-4	7-10	9-11	12-1	14-1
	Hem-fir	#3	4-4	6-4	8-1	9-10	11-5	4-1	6-0	7-7	9-4	10-9
	Southern pine	SS	6-1	9-7	12-8	16-2	19-8	6-1	9-7	12-8	16-2	19-3
	Southern pine	#1	5-11	9-2	11-8	13-8	16-2	5-10	8-8	11-0	12-10	15-3
	Southern pine	#2	5-3	7-11	10-0	11-11	14-0	5-0	7-5	9-5	11-3	13-2
	Southern pine	#3	4-1	6-0	7-7	9-2	10-10	3-10	5-8	7-1	8-8	10-3
	Spruce-pine-fir	SS	5-9	9-1	11-11	15-3	18-1	5-9	9-1	11-11	14-8	17-1
	Spruce-pine-fir	#1	5-8	8-5	10-8	13-1	15-2	5-5	7-11	10-1	12-4	14-3
	Spruce-pine-fir	#2	5-8	8-5	10-8	13-1	15-2	5-5	7-11	10-1	12-4	14-3
	Spruce-pine-fir	#3	4-4	6-4	8-1	9-10	11-5	4-1	6-0	7-7	9-4	10-9
19.2	Douglas fir-larch	SS	5-10	9-3	12-2	15-6	18-1	5-10	9-3	12-0	14-8	17-1
	Douglas fir-larch	#1	5-7	8-3	10-5	12-9	14-9	5-4	7-9	9-10	12-0	13-11
	Douglas fir-larch	#2	5-4	7-10	9-11	12-1	14-0	5-0	7-4	9-4	11-5	13-2
	Douglas fir-larch	#3	4-1	6-0	7-7	9-3	10-8	3-10	5-7	7-1	8-8	10-1
	Hem-fir	SS	5-6	8-8	11-6	14-8	17-4	5-6	8-8	11-6	14-2	15-5
	Hem-fir	#1	5-5	8-2	10-3	12-7	14-7	5-3	7-8	9-8	11-10	13-9
	Hem-fir	#2	5-2	7-7	9-7	11-9	13-7	4-11	7-2	9-1	11-1	12-10
	Hem-fir	#3	4-0	5-10	7-4	9-0	10-5	3-9	5-6	6-11	8-6	9-10

(continued)

TABLE R802.5.1(8)—continued
RAFTER SPANS FOR 70 PSF GROUND SNOW LOAD
(Ceiling attached to rafters, L/Δ = 240)

RAFTER SPACING (inches)	SPECIES AND GRADE		DEAD LOAD = 10 psf					DEAD LOAD = 20 psf				
			2 × 4	2 × 6	2 × 8	2 × 10	2 × 12	2 × 4	2 × 6	2 × 8	2 × 10	2 × 12
			Maximum rafter spans[a]									
			(feet - inches)	(feet - inches)	(feet - inches)	(feet - inches)	(feet - inches)	(feet - inches)	(feet - inches)	(feet - inches)	(feet - inches)	(feet - inches)
19.2	Southern pine	SS	5-9	9-1	11-11	15-3	18-6	5-9	9-1	11-11	14-11	17-7
	Southern pine	#1	5-6	8-5	10-8	12-5	14-9	5-4	7-11	10-0	11-9	13-11
	Southern pine	#2	4-10	7-3	9-2	10-10	12-9	4-6	6-10	8-8	10-3	12-1
	Southern pine	#3	3-8	5-6	6-11	8-4	9-11	3-6	5-2	6-6	7-11	9-4
	Spruce-pine-fir	SS	5-5	8-6	11-3	14-3	16-6	5-5	8-6	11-0	13-5	15-7
	Spruce-pine-fir	#1	5-3	7-8	9-9	11-11	13-10	5-0	7-3	9-2	11-3	13-0
	Spruce-pine-fir	#2	5-3	7-8	9-9	11-11	13-10	5-0	7-3	9-2	11-3	13-0
	Spruce-pine-fir	#3	4-0	5-10	7-4	9-0	10-5	3-9	5-6	6-11	8-6	9-10
24	Douglas fir-larch	SS	5-5	8-7	11-3	13-11	16-2	5-5	8-6	10-9	13-2	15-3
	Douglas fir-larch	#1	5-0	7-4	9-4	11-5	13-2	4-9	6-11	8-9	10-9	12-5
	Douglas fir-larch	#2	4-9	7-0	8-10	10-10	12-6	4-6	6-7	8-4	10-2	11-10
	Douglas fir-larch	#3	3-8	5-4	6-9	8-3	9-7	3-5	5-0	6-4	7-9	9-0
	Hem-fir	SS	5-2	8-1	10-8	13-6	13-11	5-2	8-1	10-5	12-4	12-4
	Hem-fir	#1	5-0	7-3	9-2	11-3	13-0	4-8	6-10	8-8	10-7	12-4
	Hem-fir	#2	4-8	6-9	8-7	10-6	12-2	4-4	6-5	8-1	9-11	11-6
	Hem-fir	#3	3-7	5-2	6-7	8-1	9-4	3-4	4-11	6-3	7-7	8-10
	Southern pine	SS	5-4	8-5	11-1	14-2	16-8	5-4	8-5	11-1	13-4	15-9
	Southern pine	#1	5-0	7-6	9-6	11-1	13-2	4-9	7-1	9-0	10-6	12-5
	Southern pine	#2	4-4	6-5	8-2	9-9	11-5	4-1	6-1	7-9	9-2	10-9
	Southern pine	#3	3-4	4-11	6-2	7-6	8-10	3-1	4-7	5-10	7-1	8-4
	Spruce-pine-fir	SS	5-0	7-11	10-5	12-9	14-9	5-0	7-9	9-10	12-0	12-11
	Spruce-pine-fir	#1	4-8	6-11	8-9	10-8	12-4	4-5	6-6	8-3	10-0	11-8
	Spruce-pine-fir	#2	4-8	6-11	8-9	10-8	12-4	4-5	6-6	8-3	10-0	11-8
	Spruce-pine-fir	#3	3-7	5-2	6-7	8-1	9-4	3-4	4-11	6-3	7-7	8-10

Check sources for availability of lumber in lengths greater than 20 feet.

For SI: 1 inch = 25.4 mm, 1 foot = 304.8 mm, 1 pound per square foot = 0.0479 kPa.

a. The tabulated rafter spans assume that ceiling joists are located at the bottom of the attic space or that some other method of resisting the outward push of the rafters on the bearing walls, such as rafter ties, is provided at that location. Where ceiling joists or rafter ties are located higher in the attic space, the rafter spans shall be multiplied by the following factors:

H_C/H_R	Rafter Span Adjustment Factor
1/3	0.67
1/4	0.76
1/5	0.83
1/6	0.90
1/7.5 or less	1.00

where:

H_C = Height of ceiling joists or rafter ties measured vertically above the top of the rafter support walls.

H_R = Height of roof ridge measured vertically above the top of the rafter support walls.

TABLE R802.5.1(9)
RAFTER/CEILING JOIST HEEL JOINT CONNECTIONS[a, b, c, d, e, f, h]

RAFTER SLOPE	RAFTER SPACING (inches)	GROUND SNOW LOAD (psf)															
		20[g]				30				50				70			
		Roof span (feet)															
		12	20	28	36	12	20	28	36	12	20	28	36	12	20	28	36
		Required number of 16d common nails[a, b] per heel joint splices[c, d, e, f]															
3:12	12	4	6	8	10	4	6	8	11	5	8	12	15	6	11	15	20
	16	5	8	10	13	5	8	11	14	6	11	15	20	8	14	20	26
	24	7	11	15	19	7	11	16	21	9	16	23	30	12	21	30	39
4:12	12	3	5	6	8	3	5	6	8	4	6	9	11	5	8	12	15
	16	4	6	8	10	4	6	8	11	5	8	12	15	6	11	15	20
	24	5	8	12	15	5	9	12	16	7	12	17	22	9	16	23	29
5:12	12	3	4	5	6	3	4	5	7	3	5	7	9	4	7	9	12
	16	3	5	6	8	3	5	7	9	4	7	9	12	5	9	12	16
	24	4	7	9	12	4	7	10	13	6	10	14	18	7	13	18	23
7:12	12	3	4	4	5	3	3	4	5	3	4	5	7	3	5	7	9
	16	3	4	5	6	3	4	5	6	3	5	7	9	4	6	9	11
	24	3	5	7	9	3	5	7	9	4	7	10	13	5	9	13	17
9:12	12	3	3	4	4	3	3	3	4	3	3	4	5	3	4	5	7
	16	3	4	4	5	3	3	4	5	3	4	5	7	3	5	7	9
	24	3	4	6	7	3	4	6	7	3	6	8	10	4	7	10	13
12:12	12	3	3	3	3	3	3	3	3	3	3	3	4	3	3	4	5
	16	3	3	4	4	3	3	3	4	3	3	4	5	3	4	5	7
	24	3	4	4	5	3	3	4	6	3	4	6	8	3	6	8	10

For SI: 1 inch = 25.4 mm, 1 foot = 304.8 mm, 1 pound per square foot = 0.0479 kPa.

a. 40d box nails shall be permitted to be substituted for 16d common nails.

b. Nailing requirements shall be permitted to be reduced 25 percent if nails are clinched.

c. Heel joint connections are not required where the ridge is supported by a load-bearing wall, header or ridge beam.

d. Where intermediate support of the rafter is provided by vertical struts or purlins to a load-bearing wall, the tabulated heel joint connection requirements shall be permitted to be reduced proportionally to the reduction in span.

e. Equivalent nailing patterns are required for ceiling joist to ceiling joist lap splices.

f. Where rafter ties are substituted for ceiling joists, the heel joint connection requirement shall be taken as the tabulated heel joint connection requirement for two-thirds of the actual rafter slope.

g. Applies to roof live load of 20 psf or less.

h. Tabulated heel joint connection requirements assume that ceiling joists or rafter ties are located at the bottom of the attic space. Where ceiling joists or rafter ties are located higher in the attic, heel joint connection requirements shall be increased by the following factors:

H_C/H_R	Heel Joint Connection Adjustment Factor
1/3	1.5
1/4	1.33
1/5	1.25
1/6	1.2
1/10 or less	1.11

where:

H_C = Height of ceiling joists or rafter ties measured vertically above the top of the rafter support walls.

H_R = Height of roof ridge measured vertically above the top of the rafter support walls.

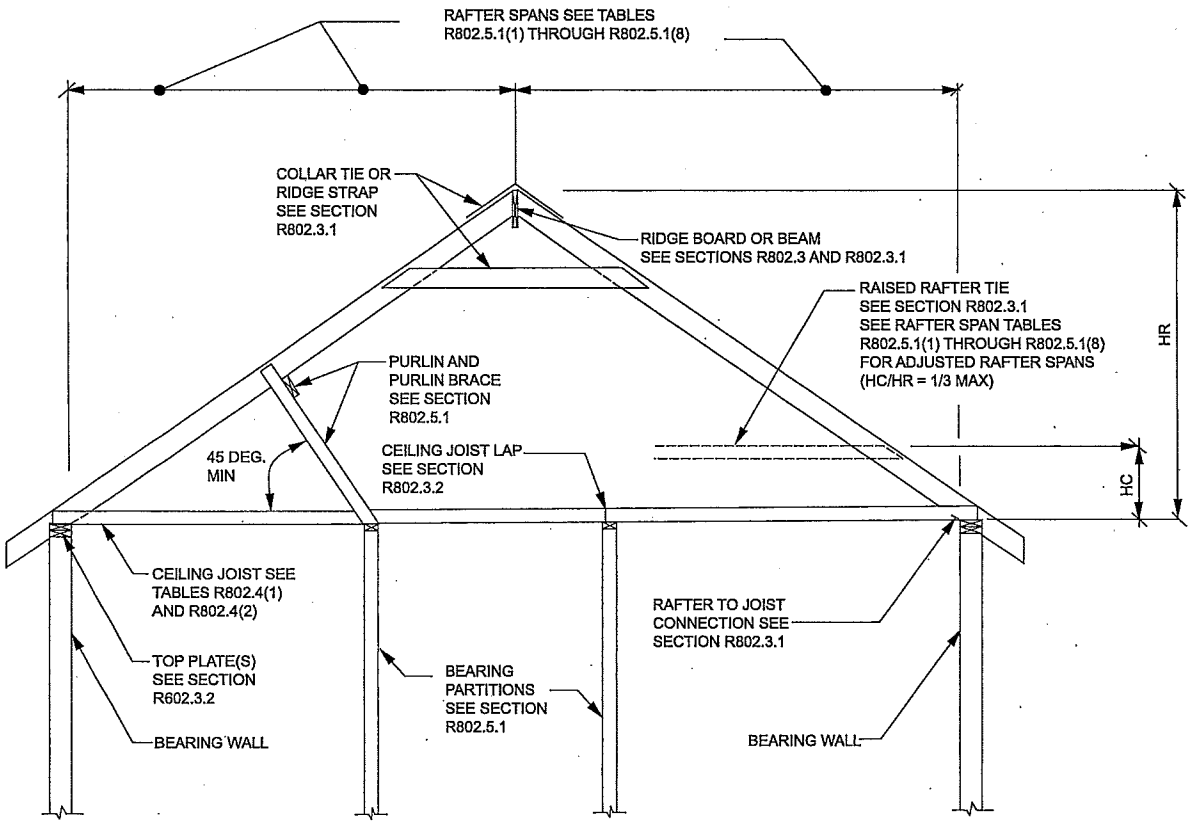

For SI: 1 inch = 25.4 mm, 1 foot = 305 mm, 1 degree = 0.018 rad.

Note: Where ceiling joists run perpendicular to the rafter, rafter ties shall be installed in accordance with Section R802.3.1.

H_C = Height of ceiling joists or rafter ties measured vertically above the top of rafter support walls.

H_R = Height of roof ridge measured vertically above the top of the rafter support walls.

FIGURE R802.5.1
BRACED RAFTER CONSTRUCTION

R802.6 Bearing. The ends of each rafter or ceiling joist shall have not less than $1^1/_2$ inches (38 mm) of bearing on wood or metal and not less than 3 inches (76 mm) on masonry or concrete. The bearing on masonry or concrete shall be direct, or a sill plate of 2-inch (51 mm) minimum nominal thickness shall be provided under the rafter or ceiling joist. The sill plate shall provide a minimum nominal bearing area of 48 square inches (30 865 mm^2).

R802.6.1 Finished ceiling material. If the finished ceiling material is installed on the ceiling prior to the attachment of the ceiling to the walls, such as in construction at a factory, a compression strip of the same thickness as the finished ceiling material shall be installed directly above the top plate of bearing walls if the compressive strength of the finished ceiling material is less than the loads it will be required to withstand. The compression strip shall cover the entire length of such top plate and shall be not less than one-half the width of the top plate. It shall be of material capable of transmitting the loads transferred through it.

R802.7 Cutting, drilling and notching. Structural roof members shall not be cut, bored or notched in excess of the limitations specified in this section.

R802.7.1 Sawn lumber. Cuts, notches and holes in solid lumber joists, rafters, blocking and beams shall comply with the provisions of Section R502.8.1 except that cantilevered portions of rafters shall be permitted in accordance with Section R802.7.1.1.

R802.7.1.1 Cantilevered portions of rafters. Notches on cantilevered portions of rafters are permitted provided the dimension of the remaining portion of the rafter is not less than $3^1/_2$ inches (89 mm) and the length of the cantilever does not exceed 24 inches (610 mm) in accordance with Figure R802.7.1.1.

R802.7.1.2 Ceiling joist taper cut. Taper cuts at the ends of the ceiling joist shall not exceed one-fourth the depth of the member in accordance with Figure R802.7.1.2.

R802.7.2 Engineered wood products. Cuts, notches and holes bored in trusses, structural composite lumber, structural glue-laminated members, cross-laminated timber members or I-joists are prohibited except where permitted by the manufacturer's recommendations or where the effects of such alterations are specifically considered in the design of the member by a registered design professional.

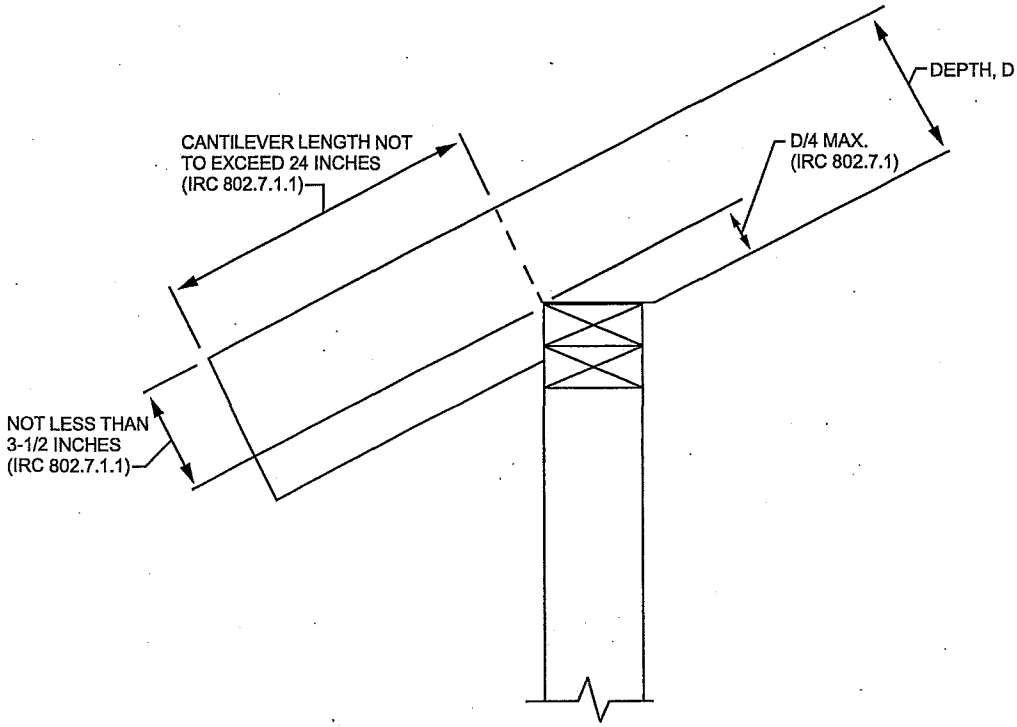

For SI: 1 inch = 25.4 mm.

FIGURE R802.7.1.1
RAFTER NOTCH

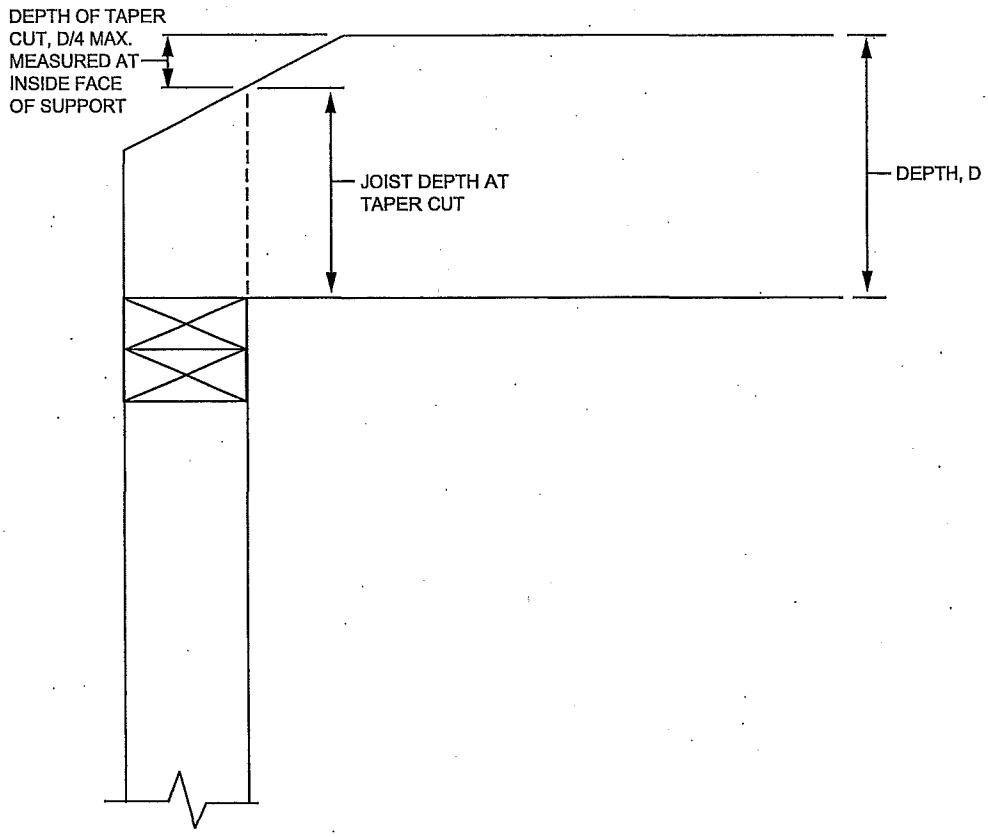

FIGURE R802.7.1.2
CEILING JOIST TAPER CUT

R802.8 Lateral support. Roof framing members and ceiling joists having a depth-to-thickness ratio exceeding 5 to 1 based on nominal dimensions shall be provided with lateral support at points of bearing to prevent rotation. For roof rafters with ceiling joists attached in accordance with Table R602.3(1), the depth-to-thickness ratio for the total assembly shall be determined using the combined thickness of the rafter plus the attached ceiling joist.

Exception: Roof trusses shall be braced in accordance with Section R802.10.3.

R802.8.1 Bridging. Rafters and ceiling joists having a depth-to-thickness ratio exceeding 6 to 1 based on nominal dimensions shall be supported laterally by solid blocking, diagonal bridging (wood or metal) or a continuous 1-inch by 3-inch (25 mm by 76 mm) wood strip nailed across the rafters or ceiling joists at intervals not exceeding 8 feet (2438 mm).

R802.9 Framing of openings. Openings in roof and ceiling framing shall be framed with header and trimmer joists. Where the header joist span does not exceed 4 feet (1219 mm), the header joist shall be permitted to be a single member the same size as the ceiling joist or rafter. Single trimmer joists shall be permitted to be used to carry a single header joist that is located within 3 feet (914 mm) of the trimmer joist bearing. Where the header joist span exceeds 4 feet (1219 mm), the trimmer joists and the header joist shall be doubled and of sufficient cross section to support the ceiling joists or rafter framing into the header. *Approved* hangers shall be used for the header joist to trimmer joist connections where the header joist span exceeds 6 feet (1829 mm). Tail joists over 12 feet (3658 mm) long shall be supported at the header by framing anchors or on ledger strips not less than 2 inches by 2 inches (51 mm by 51 mm).

R802.10 Wood trusses.

R802.10.1 Truss design drawings. Truss design drawings, prepared in conformance to Section R802.10.1, shall be provided to the *building official* and *approved* prior to installation. Truss design drawings shall be provided with the shipment of trusses delivered to the job site. Truss design drawings shall include, at a minimum, the following information:

1. Slope or depth, span and spacing.
2. Location of all joints.
3. Required bearing widths.
4. Design loads as applicable.
   - 4.1. Top chord live load (as determined from Section R301.6).
   - 4.2. Top chord dead load.
   - 4.3. Bottom chord live load.
   - 4.4. Bottom chord dead load.
   - 4.5. Concentrated loads and their points of application.
   - 4.6. Controlling wind and earthquake loads.
5. Adjustments to lumber and joint connector design values for conditions of use.
6. Each reaction force and direction.
7. Joint connector type and description such as size, thickness or gage and the dimensioned location of each joint connector except where symmetrically located relative to the joint interface.
8. Lumber size, species and *grade for each member.*
9. Connection requirements for:
   - 9.1. Truss to girder-truss.
   - 9.2. Truss ply to ply.
   - 9.3. Field splices.
10. Calculated deflection ratio and/or maximum description for live and total load.
11. Maximum axial compression forces in the truss members to enable the building designer to design the size, connections and anchorage of the permanent continuous lateral bracing. Forces shall be shown on the truss design drawing or on supplemental documents.
12. Required permanent truss member bracing location.

R802.10.2 Design. Wood trusses shall be designed in accordance with accepted engineering practice. The design and manufacture of metal-plate-connected wood trusses shall comply with ANSI/TPI 1. The truss design drawings shall be prepared by a registered professional where required by the statutes of the *jurisdiction* in which the project is to be constructed in accordance with Section R106.1.

R802.10.2.1 Applicability limits. The provisions of this section shall control the design of truss roof framing when snow controls for buildings, not greater than 60 feet (18 288 mm) in length perpendicular to the joist, rafter or truss span, not greater than 36 feet (10 973 mm) in width parallel to the joist, rafter or truss span, not more than three stories above grade plane in height, and roof slopes not smaller than 3:12 (25 percent slope) or greater than 12:12 (100-percent slope). Truss roof framing constructed in accordance with the provisions of this section shall be limited to sites subjected to a maximum design wind speed of 140 miles per hour (63 m/s), Exposure B or C, and a maximum ground snow load of 70 psf (3352 Pa). For consistent loading of all truss types, roof snow load is to be computed as: $0.7\ p_g$.

R802.10.3 Bracing. Trusses shall be braced to prevent rotation and provide lateral stability in accordance with the requirements specified in the *construction documents* for the building and on the individual truss design drawings. In the absence of specific bracing requirements, trusses shall be braced in accordance with accepted industry practice such as the SBCA *Building Component Safety Information (BCSI) Guide to Good Practice for Handling, Installing & Bracing of Metal Plate Connected Wood Trusses.*

R802.10.4 Alterations to trusses. Truss members shall not be cut, notched, drilled, spliced or otherwise altered in any way without the approval of a registered *design professional.* Alterations resulting in the addition of load such as HVAC equipment water heater that exceeds the design load for the truss shall not be permitted without verification that the truss is capable of supporting such additional loading.

R802.11 Roof tie-down.

R802.11.1 Uplift resistance. Roof assemblies shall have uplift resistance in accordance with Sections R802.11.1.1 and R802.11.1.2.

Where the uplift force does not exceed 200 pounds (90.8 kg), rafters and trusses spaced not more than 24 inches (610 mm) on center shall be permitted to be attached to their supporting wall assemblies in accordance with Table R602.3(1).

Where the basic wind speed does not exceed 115 mph, the Wind Exposure Category is B, the roof pitch is 5:12 or greater, and the roof span is 32 feet (9754 mm) or less, rafters and trusses spaced not more than 24 inches (610 mm) on center shall be permitted to be attached to their supporting wall assemblies in accordance with Table R602.3(1).

R802.11.1.1 Truss uplift resistance. Trusses shall be attached to supporting wall assemblies by connections capable of resisting uplift forces as specified on the Truss Design Drawings for the ultimate design wind speed as determined by Figure R301.2(4)A and listed in Table R301.2(1) or as shown on the construction documents. Uplift forces shall be permitted to be determined as specified by Table R802.11, if applicable, or as determined by accepted engineering practice.

R802.11.1.2 Rafter uplift resistance. Individual rafters shall be attached to supporting wall assemblies by connections capable of resisting uplift forces as determined by Table R802.11 or as determined by accepted engineering practice. Connections for beams used in a roof system shall be designed in accordance with accepted engineering practice.

TABLE R802.11
RAFTER OR TRUSS UPLIFT CONNECTION FORCES FROM WIND (ASD) (POUNDS PER CONNECTION)[a, b, c, d, e, f, g, h]

RAFTER OR TRUSS SPACING	ROOF SPAN (feet)	EXPOSURE B									
		Ultimate Design Wind Speed V_{ULT} (mph)									
		110		115		120		130		140	
		Roof Pitch		Roof Pitch		Roof Pitch		Roof Pitch		Roof Pitch	
		< 5:12	≥ 5:12	< 5:12	≥ 5:12	< 5:12	≥ 5:12	< 5:12	≥ 5:12	< 5:12	≥ 5:12
12″ o.c.	12	48	43	59	53	70	64	95	88	122	113
	18	59	52	74	66	89	81	122	112	157	146
	24	71	62	89	79	108	98	149	137	192	178
	28	79	69	99	88	121	109	167	153	216	200
	32	86	75	109	97	134	120	185	170	240	222
	36	94	82	120	106	146	132	203	186	264	244
	42	106	92	135	120	166	149	230	211	300	278
	48	118	102	151	134	185	166	258	236	336	311
16″ o.c.	12	64	57	78	70	93	85	126	117	162	150
	18	78	69	98	88	118	108	162	149	209	194
	24	94	82	118	105	144	130	198	182	255	237
	28	105	92	132	117	161	145	222	203	287	266
	32	114	100	145	129	178	160	246	226	319	295
	36	125	109	160	141	194	176	270	247	351	325
	42	141	122	180	160	221	198	306	281	399	370
	48	157	136	201	178	246	221	343	314	447	414
24″ o.c.	12	96	86	118	106	140	128	190	176	244	226
	18	118	104	148	132	178	162	244	224	314	292
	24	142	124	178	158	216	196	298	274	384	356
	28	158	138	198	176	242	218	334	306	432	400
	32	172	150	218	194	268	240	370	340	480	444
	36	188	164	240	212	292	264	406	372	528	488
	42	212	184	270	240	332	298	460	422	600	556
	48	236	204	302	268	370	332	516	472	672	622

(continued)

TABLE R802.11—continued
RAFTER OR TRUSS UPLIFT CONNECTION FORCES FROM WIND (POUNDS PER CONNECTION)[a, b, c, d, e, f, g, h]

RAFTER OR TRUSS SPACING	ROOF SPAN (feet)	EXPOSURE C									
		Ultimate Design Wind Speed V_{ULT} (mph)									
		110		115		120		130		140	
		Roof Pitch		Roof Pitch		Roof Pitch		Roof Pitch		Roof Pitch	
		< 5:12	≥ 5:12	< 5:12	≥ 5:12	< 5:12	≥ 5:12	< 5:12	≥ 5:12	< 5:12	≥ 5:12
12″ o.c.	12	95	88	110	102	126	118	161	151	198	186
	18	121	111	141	131	163	151	208	195	257	242
	24	148	136	173	160	200	185	256	239	317	298
	28	166	152	195	179	225	208	289	269	358	335
	32	184	168	216	199	249	231	321	299	398	373
	36	202	185	237	219	274	254	353	329	438	411
	42	229	210	269	248	312	289	402	375	499	468
	48	256	234	302	278	349	323	450	420	560	524
16″ o.c.	12	126	117	146	136	168	157	214	201	263	247
	18	161	148	188	174	217	201	277	259	342	322
	24	197	181	230	213	266	246	340	318	422	396
	28	221	202	259	238	299	277	384	358	476	446
	32	245	223	287	265	331	307	427	398	529	496
	36	269	246	315	291	364	338	469	438	583	547
	42	305	279	358	330	415	384	535	499	664	622
	48	340	311	402	370	464	430	599	559	745	697
24″ o.c.	12	190	176	220	204	252	236	322	302	396	372
	18	242	222	282	262	326	302	416	390	514	484
	24	296	272	346	320	400	370	512	478	634	596
	28	332	304	390	358	450	416	578	538	716	670
	32	368	336	432	398	498	462	642	598	796	746
	36	404	370	474	438	548	508	706	658	876	822
	42	458	420	538	496	624	578	804	750	998	936
	48	512	468	604	556	698	646	900	840	1120	1048

For SI: 1 inch = 25.4 mm, 1 foot = 304.8 mm, 1 mile per hour = 0.447 m/s, 1 pound = 0.454 kg, 1 pound per square foot = 47.9 N/m^2, 1 plf = 14.6 N/m.

a. The uplift connection forces are based on a maximum 33-foot mean roof height and Wind Exposure Category B or C. For Exposure D, the uplift connection force shall be selected from the Exposure C portion of the table using the next highest tabulated ultimate design wind speed. The adjustment coefficients in Table R301.2(3) shall not be used to multiply the tabulated forces for Exposures C and D or for other mean roof heights.

b. The uplift connection forces include an allowance for roof and ceiling assembly dead load of 15 psf.

c. The tabulated uplift connection forces are limited to a maximum roof overhang of 24 inches.

d. The tabulated uplift connection forces shall be permitted to be multiplied by 0.75 for connections not located within 8 feet of building corners.

e. For buildings with hip roofs with 5:12 and greater pitch, the tabulated uplift connection forces shall be permitted to be multiplied by 0.70. This reduction shall not be combined with any other reduction in tabulated forces.

f. For wall-to-wall and wall-to-foundation connections, the uplift connection force shall be permitted to be reduced by 60 plf for each full wall above.

g. Linear interpolation between tabulated roof spans and wind speeds shall be permitted.

h. The tabulated forces for a 12-inch on-center spacing shall be permitted to be used to determine the uplift load in pounds per linear foot.

SECTION R803
ROOF SHEATHING

R803.1 Lumber sheathing. Allowable spans for lumber used as roof sheathing shall conform to Table R803.1. Spaced lumber sheathing for wood shingle and shake roofing shall conform to the requirements of Sections R905.7 and R905.8. Spaced lumber sheathing is not allowed in Seismic Design Category D_2.

TABLE R803.1
MINIMUM THICKNESS OF LUMBER ROOF SHEATHING

RAFTER OR BEAM SPACING (inches)	MINIMUM NET THICKNESS (inches)
24	$^5/_8$
48[a]	$1^1/_2$ T & G
60[b]	
72[c]	

For SI: 1 inch = 25.4 mm.
a. Minimum 270 F_b, 340,000 E.
b. Minimum 420 F_b, 660,000 E.
c. Minimum 600F_b, 1,150,000 E.

R803.2 Wood structural panel sheathing.

R803.2.1 Identification and grade. Wood structural panels shall conform to DOC PS 1, DOC PS 2, CSA O437 or CSA O325, and shall be identified for grade, bond classification and performance category by a grade mark or certificate of inspection issued by an *approved* agency. Wood structural panels shall comply with the grades specified in Table R503.2.1.1(1).

R803.2.1.1 Exposure durability. Wood structural panels, when designed to be permanently exposed in outdoor applications, shall be of an exterior exposure durability. Wood structural panel roof sheathing exposed to the underside shall be permitted to be of interior type bonded with exterior glue, identified as Exposure 1.

R803.2.1.2 Fire-retardant-treated plywood. The allowable unit stresses for fire-retardant-treated plywood, including fastener values, shall be developed from an *approved* method of investigation that considers the effects of anticipated temperature and humidity to which the fire-retardant-treated plywood will be subjected, the type of treatment and redrying process. The fire-retardant-treated plywood shall be graded by an *approved agency*.

R803.2.2 Allowable spans. The maximum allowable spans for wood structural panel roof sheathing shall not exceed the values set forth in Table R503.2.1.1(1), or APA E30.

R803.2.3 Installation. Wood structural panel used as roof sheathing shall be installed with joints staggered or not staggered in accordance with Table R602.3(1), APA E30 for wood roof framing or with Table R804.3 for cold-formed steel roof framing.

SECTION R804
COLD-FORMED STEEL ROOF FRAMING

R804.1 General. Elements shall be straight and free of any defects that would significantly affect their structural performance. Cold-formed steel roof framing members shall be in accordance with the requirements of this section.

R804.1.1 Applicability limits. The provisions of this section shall control the construction of cold-formed steel roof framing for buildings not greater than 60 feet (18 288 mm) perpendicular to the joist, rafter or truss span, not greater than 40 feet (12 192 mm) in width parallel to the joist span or truss, less than or equal to three stories above *grade* plane and with roof slopes not less than 3:12 (25-percent slope) or greater than 12:12 (100-percent slope). Cold-formed steel roof framing constructed in accordance with the provisions of this section shall be limited to sites where the ultimate design wind speed is less than 139 miles per hour (62 m/s), Exposure Category B or C, and the ground snow load is less than or equal to 70 pounds per square foot (3350 Pa).

R804.1.2 In-line framing. Cold-formed steel roof framing constructed in accordance with Section R804 shall be located in line with load-bearing studs in accordance with Figure R804.1.2 and the tolerances specified as follows:

1. The maximum tolerance shall be $^3/_4$ inch (19.1 mm) between the centerline of the horizontal framing member and the centerline of the vertical framing member.
2. Where the centerline of the horizontal framing member and bearing stiffener are located to one side of the centerline of the vertical framing member, the maximum tolerance shall be $^1/_8$ inch (3.2 mm) between the web of the horizontal framing member and the edge of the vertical framing member.

R804.2 Structural framing. Load-bearing, cold-formed steel roof framing members shall be in accordance with this section.

R804.2.1 Material. Load-bearing, cold-formed steel framing members shall be cold formed to shape from structural quality sheet steel complying with the requirements of ASTM A 1003, Structural Grades 33 Type H and 50 Type H.

R804.2.2 Corrosion protection. Load-bearing, cold-formed steel framing shall have a metallic coating complying with ASTM A 1003 and one of the following:

1. A minimum of G 60 in accordance with ASTM A 653.
2. A minimum of AZ 50 in accordance with ASTM A 792.

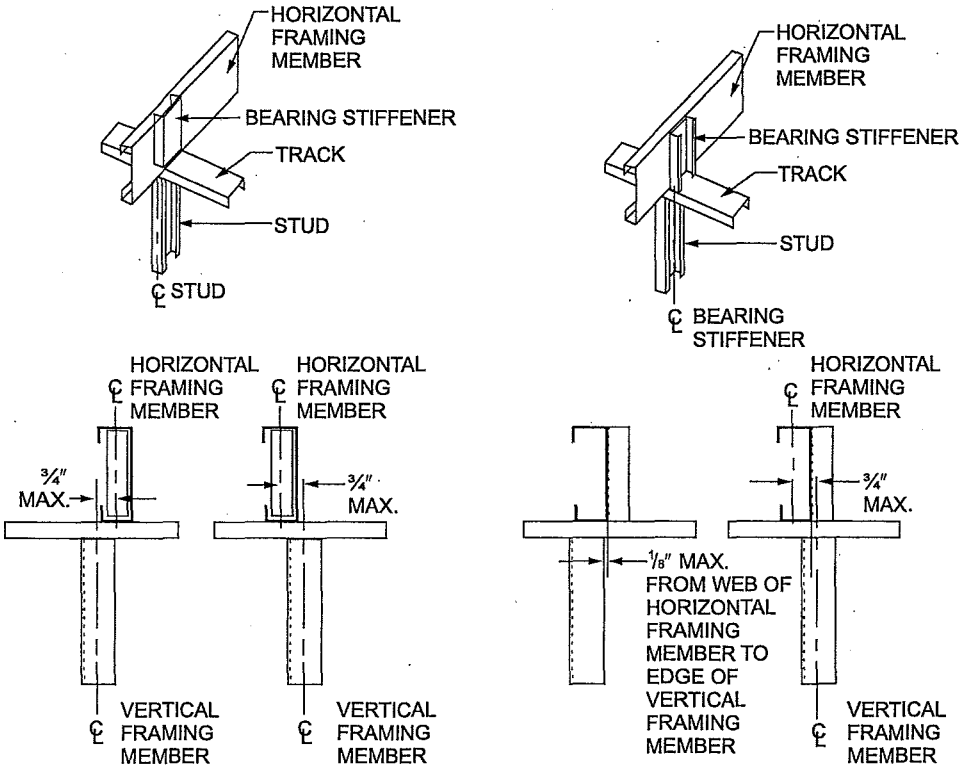

For SI: 1 inch = 25.4 mm.

FIGURE R804.1.2
IN-LINE FRAMING

R804.2.3 Dimension, thickness and material grade. Load-bearing, cold-formed steel roof framing members shall comply with Figure R804.2.3(1) and with the dimensional and thickness requirements specified in Table R804.2.3. Additionally, C-shaped sections shall have a minimum flange width of 1.625 inches (41 mm) and a maximum flange width of 2 inches (51 mm). The minimum lip size for C-shaped sections shall be $^1/_2$ inch (12.7 mm). Tracks shall comply with Figure R804.2.3(2) and shall have a minimum flange width of $1^1/_4$ inches (32 mm). Minimum Grade 33 ksi steel shall be used wherever 33 mil and 43 mil thicknesses are specified. Minimum Grade 50 ksi steel shall be used wherever 54 and 68 mil thicknesses are specified.

R804.2.4 Identification. Load-bearing, cold-formed steel framing members shall have a legible *label,* stencil, stamp or embossment with the following information as a minimum:

1. Manufacturer's identification.
2. Minimum base steel thickness in inches (mm).
3. Minimum coating designation.
4. Minimum yield strength, in kips per square inch (ksi) (MPa).

R804.2.5 Fastening requirements. Screws for steel-to-steel connections shall be installed with a minimum edge distance and center-to-center spacing of $^1/_2$ inch (12.7 mm), shall be self-drilling tapping and shall conform to ASTM C 1513. Structural sheathing shall be attached to cold-formed steel roof rafters with minimum No. 8 self-drilling tapping screws that conform to ASTM C 1513. Screws for attaching structural sheathing to cold-formed steel roof framing shall have a minimum head diameter of 0.292 inch (7.4 mm) with countersunk heads and shall be installed with a minimum edge distance of $^3/_8$ inch (9.5 mm). Gypsum board ceilings shall be attached to cold-formed steel joists with minimum No. 6 screws conforming to ASTM C 954 or ASTM C 1513 with a bugle-head style and shall be installed in accordance with Section R805. For all connections, screws shall extend through the steel a minimum of three exposed threads. Fasteners shall have rust-inhibitive coating suitable for the installation in which they are being used, or be manufactured from material not susceptible to corrosion.

R804.2.6 Web holes, web hole reinforcing and web hole patching. Web holes, web hole reinforcing and web hole patching shall be in accordance with this section.

R804.2.6.1 Web holes. Web holes in roof framing members shall comply with all of the following conditions:

1. Holes shall conform to Figure R804.2.6.1.
2. Holes shall be permitted only along the centerline of the web of the framing member.
3. Center-to-center spacing of holes shall not be less than 24 inches (610 mm).

4. The web hole width shall be not greater than one-half the member depth, or $2^1/_2$ inches (64 mm).
5. Holes shall have a web hole length not exceeding $4^1/_2$ inches (114 mm).
6. The minimum distance between the edge of the bearing surface and the edge of the web hole shall be not less than 10 inches (254 mm).

Framing members with web holes not conforming to Items 1 though 6 shall be reinforced in accordance with Section R804.2.6.2, patched in accordance with Section R804.2.6.3 or designed in accordance with accepted engineering practices.

R804.2.6.2 Web hole reinforcing. Reinforcement of web holes in ceiling joists not conforming to the requirements of Section R804.2.6.1 shall be permitted if the hole is located fully within the center 40 percent of the span and the depth and length of the hole does not exceed 65 percent of the flat width of the web. The reinforcing shall be a steel plate or C-shaped section with a hole that does not exceed the web hole size limitations of Section R804.2.6.1 for the member being reinforced. The steel reinforcing shall be the same thickness as the receiving member and shall extend not less than 1 inch (25 mm) beyond all edges of the hole. The steel reinforcing shall be fastened to the web of the receiving member with No. 8 screws spaced not greater than 1 inch (25 mm) center-to-center along the edges of the patch with minimum edge distance of $^1/_2$ inch (13 mm).

TABLE R804.2.3
LOAD-BEARING COLD-FORMED STEEL ROOF FRAMING MEMBER SIZES AND THICKNESSES

MEMBER DESIGNATION[a]	WEB DEPTH (inches)	MINIMUM BASE STEEL THICKNESS mil (inches)
350S162-t	3.5	33 (0.0329), 43 (0.0428), 54 (0.0538)
550S162-t	5.5	33 (0.0329), 43 (0.0428), 54 (0.0538), 68 (0.0677)
800S162-t	8	33 (0.0329), 43 (0.0428), 54 (0.0538), 68 (0.0677)
1000S162-t	10	43 (0.0428), 54 (0.0538), 68 (0.0677)
1200S162-t	12	43 (0.0428), 54 (0.0538), 68 (0.0677)

For SI: 1 inch = 25.4 mm

a. The member designation is defined by the first number representing the member depth in hundredths of an inch, the letter "s" representing a stud or joist member, the second number representing the flange width in hundredths of an inch and the letter "t" shall be a number representing the minimum base metal thickness in mils.

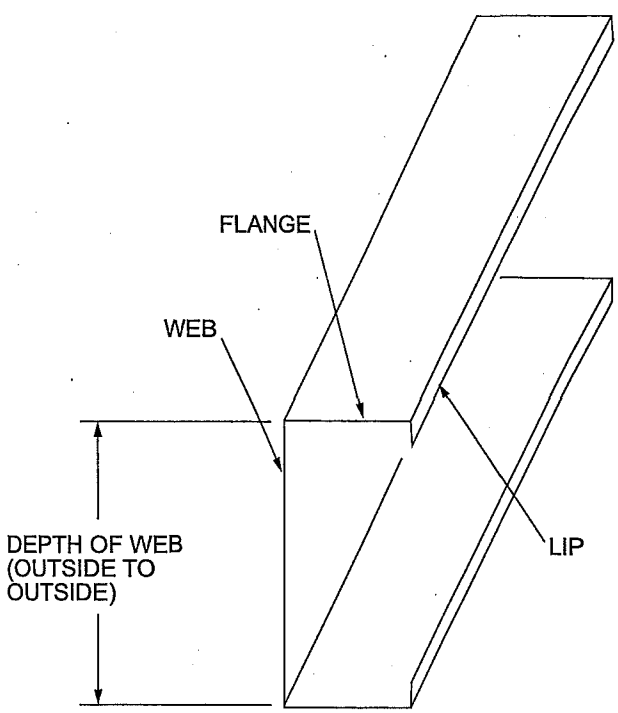

FIGURE R804.2.3(1)
C-SHAPED SECTION

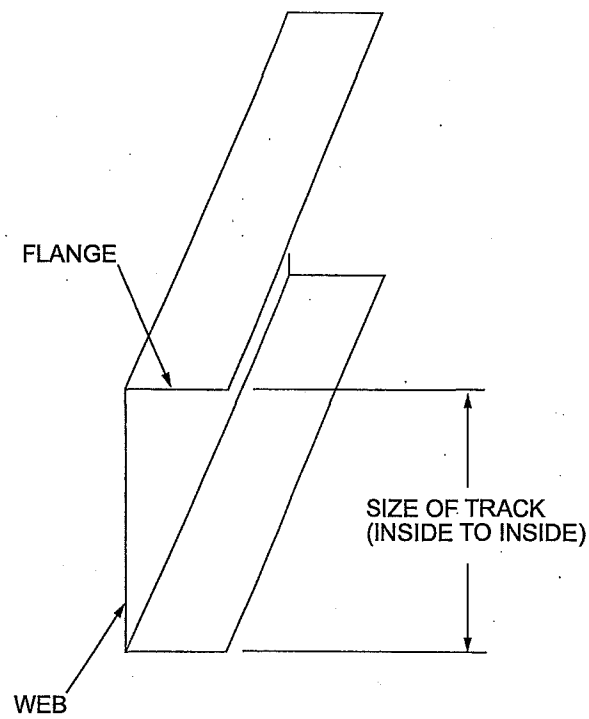

FIGURE R804.2.3(2)
TRACK SECTION

R804.2.6.3 Hole patching. Patching of web holes in roof framing members not conforming to the requirements in Section R804.2.6.1 shall be permitted in accordance with either of the following methods:

1. Framing members shall be replaced or designed in accordance with accepted engineering practices where web holes exceed either of the following size limits:
   1.1. The depth of the hole, measured across the web, exceeds 70 percent of the flat width of the web.
   1.2. The length of the hole measured along the web, exceeds 10 inches (254 mm) or the depth of the web, whichever is greater.
2. Web holes not exceeding the dimensional requirements in Section R804.2.6.3, Item 1, shall be patched with a solid steel plate, stud section or track section in accordance with Figure R804.2.6.3. The steel patch shall, as a minimum, be the same thickness as the receiving member and shall extend not less than 1 inch (25 mm) beyond all edges of the hole. The steel patch shall be fastened to the web of the receiving member with No. 8 screws spaced not greater than 1 inch (25 mm) center-to-center along the edges of the patch with minimum edge distance of $^1/_2$ inch (13 mm).

R804.3 Roof construction. Cold-formed steel roof systems constructed in accordance with the provisions of this section shall consist of both ceiling joists and rafters in accordance with Figure R804.3 and fastened in accordance with Table R804.3.

R804.3.1 Ceiling joists. Cold-formed steel ceiling joists shall be in accordance with this section.

R804.3.1.1 Minimum ceiling joist size. Ceiling joist size and thickness shall be determined in accordance with the limits set forth in Tables R804.3.1.1(1) and R804.3.1.1(2). When determining the size of ceiling joists, the lateral support of the top flange shall be classified as unbraced, braced at midspan or braced at third points in accordance with Section R804.3.1.4. Where sheathing material is attached to the top flange of ceiling joists or where the bracing is spaced closer than third point of the joists, the "third point" values from Tables R804.3.1.1(1) and R804.3.1.1(2) shall be used.

Ceiling joists shall have a bearing support length of not less than $1^1/_2$ inches (38 mm) and shall be connected to roof rafters (heel joint) with No. 10 screws in accordance with Figure R804.3.1.1 and Table 804.3.1.1(3).

Where continuous joists are framed across interior bearing supports, the interior bearing supports shall be located within 24 inches (610 mm) of midspan of the ceiling joist, and the individual spans shall not exceed the applicable spans in Tables R804.3.1.1(1) and R804.3.1.1(2).

Where the *attic* is to be used as an occupied space, the ceiling joists shall be designed in accordance with Section R505.

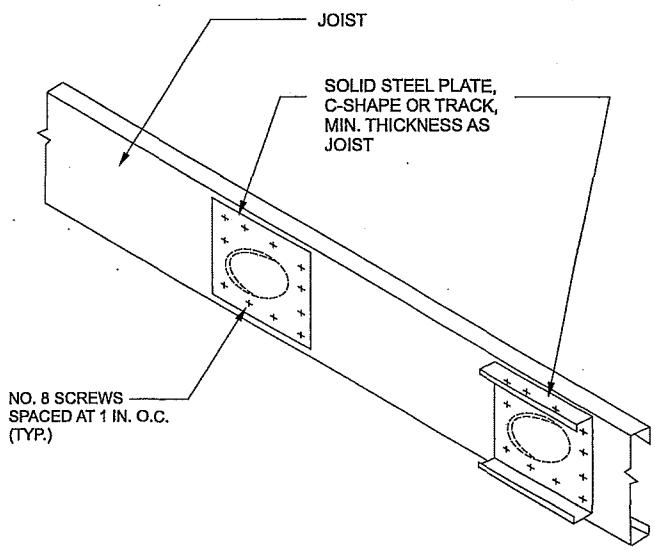

For SI: 1 inch = 25.4 mm.

FIGURE R804.2.6.3
ROOF FRAMING MEMBER WEB HOLE PATCH

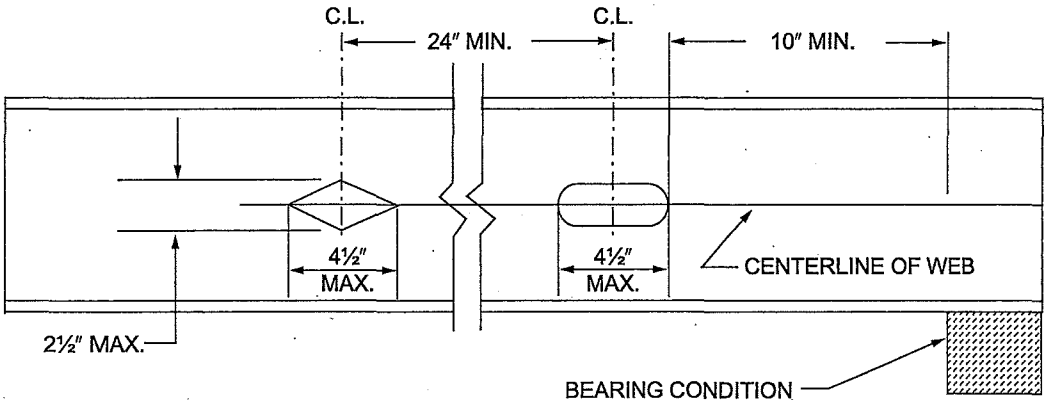

For SI: 1 inch = 25.4 mm.

FIGURE R804.2.6.1
ROOF FRAMING MEMBER WEB HOLES

2862

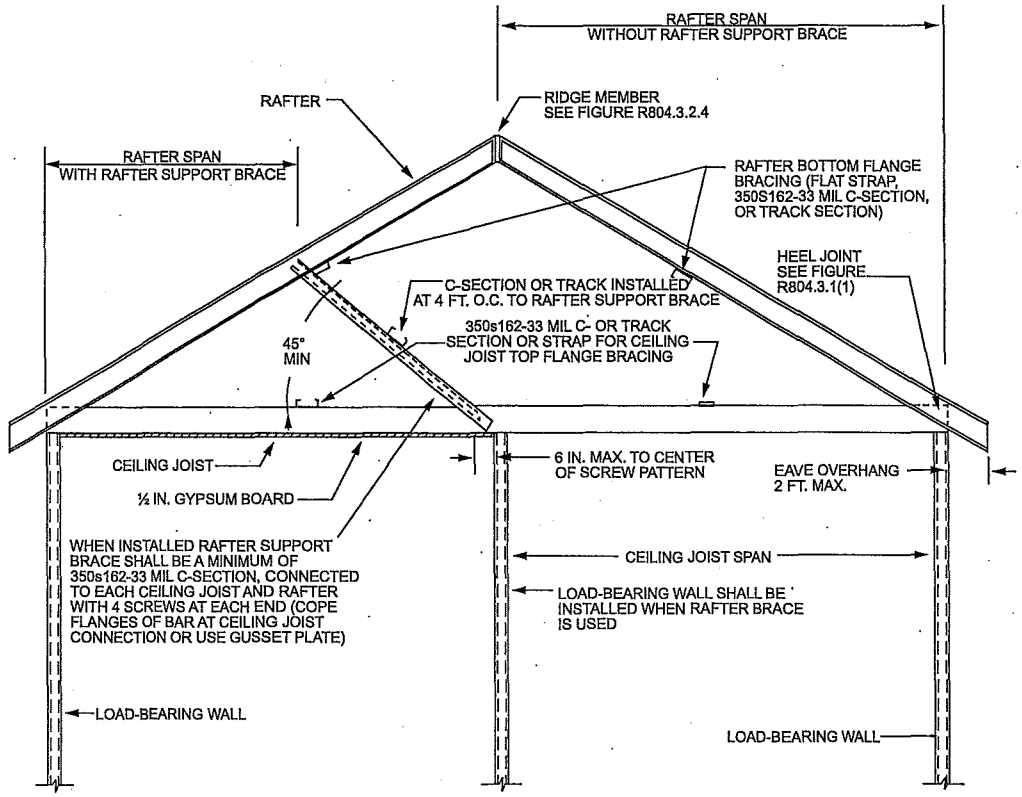

For SI: 1 inch = 25.4 mm, 1 foot = 304.8 mm, 1 mil = 0.0254 mm.

FIGURE R804.3
COLD-FORMED STEEL ROOF CONSTRUCTION

TABLE R804.3
ROOF FRAMING FASTENING SCHEDULE[a, b]

DESCRIPTION OF BUILDING ELEMENTS			NUMBER AND SIZE OF FASTENERS[a]				SPACING OF FASTENERS
Roof sheathing (oriented strand board or plywood) to rafter			No. 8 screws				6″ o.c. on edges and 12″ o.c. at interior supports. 6″ o.c. at gable end truss
Gable end truss to end wall top track			No. 10 screws				12″ o.c.
Rafter to ceiling joist			Minimum No. 10 screws, in accordance with Table R804.3.1.1(3)				Evenly spaced, not less than $^1/_2$″ from all edges.
	Ceiling Joist Spacing (in.)	Roof Span (ft)	Ultimate Design Wind Speed (mph) and Exposure Category				
			126 B 110 C	<139 B 115 C	126 C	<139 C	
Ceiling joist or roof truss to top track of bearing wall[b]	16	24	2	2	2	3	Each ceiling joist or roof truss
		28	2	2	3	3	
		32	2	2	3	4	
		36	2	2	3	4	
		40	2	2	3	4	
	24	24	2	2	3	4	
		28	2	2	4	5	
		32	2	3	4	5	
		36	2	3	4	6	
		40	2	3	5	6	

For SI: 1 inch = 25.4 mm, 1 foot = 304.8 mm, 1 pound per square foot = 0.0479 kPa, 1 mil = 0.0254 mm.

a. Screws are a minimum No. 10 unless noted otherwise.

b. Indicated number of screws shall be applied through the flanges of the truss or ceiling joist or through each leg of a 54 mil clip angle. See Section R804.3.8 for additional requirements to resist uplift forces.

2863

TABLE R804.3.1.1(1)
CEILING JOIST SPANS
10 PSF LIVE LOAD (NO ATTIC STORAGE)[a, b, c]

MEMBER DESIGNATION	ALLOWABLE SPAN (feet - inches)					
	Lateral Support of Top (Compression) Flange					
	Unbraced		Midspan Bracing		Third-point Bracing	
	Ceiling Joist Spacing (inches)					
	16	24	16	24	16	24
350S162-33	9′-5″	8′-6″	12′-2″	10′-4″	12′-2″	10′-7″
350S162-43	10′-3″	9′-12″	13′-2″	11′-6″	13′-2″	11′-6″
350S162-54	11′-1″	9′-11″	13′-9″	12′-0″	13′-9″	12′-0″
350S162-68	12′-1″	10′-9″	14′-8″	12′-10″	14′-8″	12′-10″
550S162-33	10′-7″	9′-6″	14′-10″	12′-10″	15′-11″	13′-4″
550S162-43	11′-8″	10′-6″	16′-4″	14′-3″	17′-10″	15′-3″
550S162-54	12′-6″	11′-2″	17′-7″	15′-7″	19′-5″	16′-10″
550S162-68	13′-6″	12′-1″	19′-2″	17′-0″	21′-0″	18′-4″
800S162-33	—	—	—	—	—	—
800S162-43	13′-0″	11′-9″	18′-10″	17′-0″	21′-6″	19′-0″
800S162-54	13′-10″	12′-5″	20′-0″	18′-0″	22′-9″	20′-4″
800S162-68	14′-11″	13′-4″	21′-3″	19′-1″	24′-1″	21′-8″
1000S162-43	—	—	—	—	—	—
1000S162-54	14′-9″	13′-3″	21′-4″	19′-3″	24′-4″	22′-0″
1000S162-68	15′-10″	14′-2″	22′-8″	20′-5″	25′-9″	23′-2″
1200S162-43	—	—	—	—	—	—
1200S162-54	—	—	—	—	—	—
1200S162-68	16′-8″	14′-11″	23′-11″	21′-6″	27′-2″	24′-6″

For SI: 1 inch = 25.4 mm, 1 foot = 304.8 mm, 1 mil = 0.0254 mm, 1 pound per square foot = 0.0479 kPa.

a. Deflection criterion: $L/240$ for total loads.

b. Ceiling dead load = 5 psf.

c. Minimum Grade 33 ksi steel shall be used for 33 mil and 43 mil thicknesses. Minimum Grade 50 ksi steel shall be used for 54 and 68 mil thicknesses.

TABLE R804.3.1.1(2)
CEILING JOIST SPANS
20 PSF LIVE LOAD (LIMITED ATTIC STORAGE)[a, b, c]

MEMBER DESIGNATION	ALLOWABLE SPAN (feet - inches)					
	Lateral Support of Top (Compression) Flange					
	Unbraced		Midspan Bracing		Third-point Bracing	
	Ceiling Joist Spacing (inches)					
	16	24	16	24	16	24
350S162-33	8′-2″	6′-10″	9′-9″	6′-10″	9′-11″	6′-10″
350S162-43	8′-10″	7′-10″	11′-0″	9′-5″	11′-0″	9′-7″
350S162-54	9′-6″	8′-6″	11′-9″	10′-3″	11′-9″	10′-3″
350S162-68	10′-4″	9′-2″	12′-7″	11′-0″	12′-7″	11′-0″
550S162-33	9′-2″	8′-3″	12′-2″	8′-5″	12′-6″	8′-5″
550S162-43	10′-1″	9′-1″	13′-7″	11′-8″	14′-5″	12′-2″
550S162-54	10′-9″	9′-8″	14′-10″	12′-10″	15′-11″	13′-6″
550S162-68	11′-7″	10′-4″	16′-4″	14′-0″	17′-5″	14′-11″
800S162-33	—	—	—	—	—	—
800S162-43	11′-4″	10′-1″	16′-5″	13′-6″	18′-1″	13′-6″
800S162-54	20′-0″	10′-9″	17′-4″	15′-6″	19′-6″	27′-0″
800S162-68	12′-10″	11′-6″	18′-5″	16′-6″	20′-10″	18′-3″
1000S162-43	—	—	—	—	—	—
1000S162-54	12′-10″	11′-6″	18′-7″	16′-9″	21′-2″	15′-5″
1000S162-68	13′-8″	12′-3″	19′-8″	17′-8″	22′-4″	20′-1″
1200S162-43	—	—	—	—	—	—
1200S162-54	—	—	—	—	—	—
1200S162-68	14′-4″	12′-11″	20′-9″	18′-8″	23′-7″	21′-3″

For SI: 1 inch = 25.4 mm, 1 foot = 304.8 mm, 1 mil = 0.0254 mm, 1 pound per square foot = 0.0479 kPa.

a. Deflection criterion: L/240 for total loads.

b. Ceiling deal load = 5 psf.

c. Minimum Grade 33 ksi steel shall be used for 33 mil and 43 mil thicknesses. Minimum Grade 50 ksi steel shall be used for 54 and 68 mil thicknesses.

TABLE R804.3.1.1(3)
NUMBER OF SCREWS REQUIRED FOR CEILING JOIST TO ROOF RAFTER CONNECTION[a]

ROOF SLOPE	NUMBER OF SCREWS																			
	Building width (feet)																			
	24				28				32				36				40			
	Ground snow load (psf)																			
	20	30	50	70	20	30	50	70	20	30	50	70	20	30	50	70	20	30	50	70
3/12	5	6	9	11	5	7	10	13	6	8	11	15	7	8	13	17	8	9	14	19
4/12	4	5	7	9	4	5	8	10	5	6	9	12	5	7	10	13	6	7	11	14
5/12	3	4	6	7	4	4	6	8	4	5	7	10	5	5	8	11	5	6	9	12
6/12	3	3	5	6	3	4	6	7	4	4	6	8	4	5	7	9	4	5	8	10
7/12	3	3	4	6	3	3	5	7	3	4	6	7	4	4	6	8	4	5	7	9
8/12	2	3	4	5	3	3	5	6	3	4	5	7	3	4	6	8	4	4	6	8
9/12	2	3	4	5	3	3	4	6	3	3	5	6	3	4	5	7	3	4	6	8
10/12	2	2	4	5	2	3	4	5	3	3	5	6	3	3	5	7	3	4	6	7
11/12	2	2	3	4	2	3	4	5	3	3	4	6	3	3	5	6	3	4	5	7
12/12	2	2	3	4	2	3	4	5	2	3	4	5	3	3	5	6	3	4	5	7

For SI: 1 inch = 25.4 mm, 1 foot = 304.8 mm, 1 pound per square foot = 0.0479kPa.
a. Screws shall be No. 10.

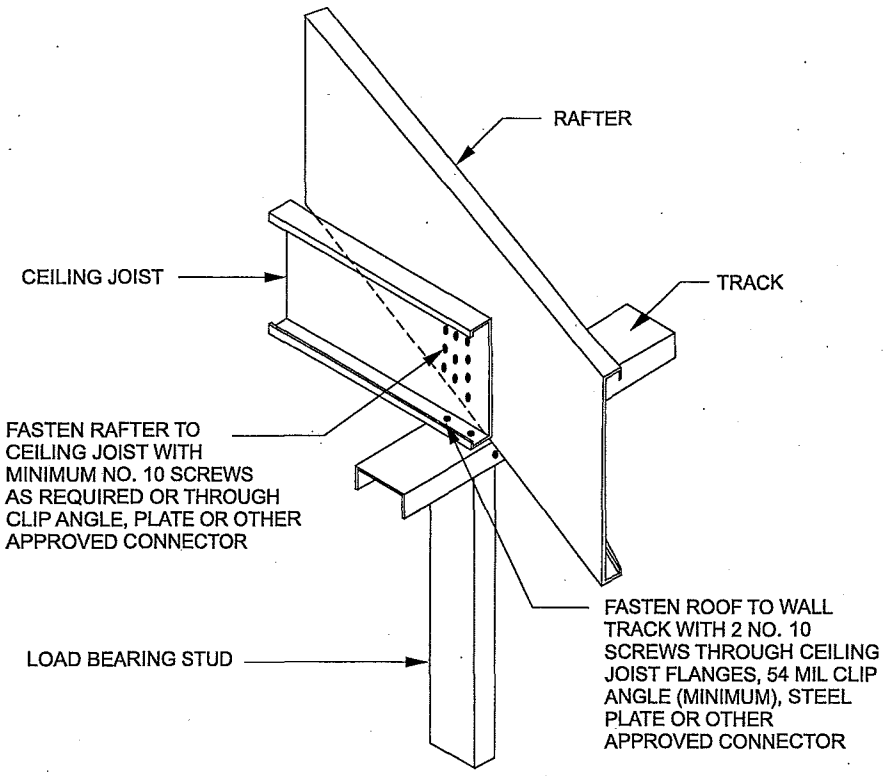

For SI: 1 mil = 0.0254 mm.

FIGURE R804.3.1.1
JOIST TO RAFTER CONNECTION

2866

R804.3.1.2 Ceiling joist bottom flange bracing. The bottom flanges of ceiling joists shall be laterally braced by the application of gypsum board or continuous steel straps installed perpendicular to the joist run in accordance with one of the following:

1. Gypsum board shall be fastened with No. 6 screws in accordance with Section R702.
2. Steel straps with a minimum size of $1^1/_2$ inches by 33 mils (38 mm by 0.84 mm) shall be installed at a maximum spacing of 4 feet (1219 mm). Straps shall be fastened to the bottom flange at each joist with one No. 8 screw and shall be fastened to blocking with two No. 8 screws. Blocking shall be installed between joists at a maximum spacing of 12 feet (3658 mm) measured along a line of continuous strapping (perpendicular to the joist run). Blocking shall also be located at the termination of all straps.

R804.3.1.3 Ceiling joist top flange bracing. The top flanges of ceiling joists shall be laterally braced as required by Tables R804.3.1.1(1) and R804.3.1.1(2), in accordance with one of the following:

1. Minimum 33-mil (0.84 mm) C-shaped member in accordance with Figure R804.3.1.3(1).
2. Minimum 33-mil (0.84 mm) track section in accordance with Figure R804.3.1.3(1).
3. Minimum 33-mil (0.84 mm) hat section in accordance with Figure R804.3.1.3(1).
4. Minimum 54-mil (1.37 mm) $1^1/_2$-inch (38 mm) cold-rolled channel section in accordance with Figure R804.3.1.3(1).
5. Minimum $1^1/_2$-inch by 33-mil (38 mm by 0.84 mm) continuous steel strap in accordance with Figure R804.3.1.3(2).

Lateral bracing shall be installed perpendicular to the ceiling joists and shall be fastened to the top flange of each joist with one No. 8 screw. Blocking shall be installed between joists in line with bracing at a maximum spacing of 12 feet (3658 mm) measured perpendicular to the joists. Ends of lateral bracing shall be attached to blocking or anchored to a stable building component with two No. 8 screws.

R804.3.1.4 Ceiling joist splicing. Splices in ceiling joists shall be permitted, if ceiling joist splices are supported at interior bearing points and are constructed in accordance with Figure R804.3.1.4. The number of screws on each side of the splice shall be the same as required for the heel joint connection in Table R804.3.1.1(3).

R804.3.2 Roof rafters. Cold-formed steel roof rafters shall be in accordance with this section.

R804.3.2.1 Minimum roof rafter sizes. Roof rafter size and thickness shall be determined in accordance with the limits set forth in Table R804.3.2.1(1) based on the horizontal projection of the roof rafter span. For determination of roof rafter sizes, reduction of roof spans shall be permitted where a roof rafter support brace is installed in accordance with Section R804.3.2.2. The reduced roof rafter span shall be taken as the larger of the distances from the roof rafter support brace to the ridge or to the heel measured horizontally.

For the purpose of determining roof rafter sizes in Table R804.3.2.1(1), ultimate design wind speeds shall be converted to equivalent ground snow loads in accordance with Table R804.3.2.1(2). Roof rafter sizes shall be based on the higher of the ground snow load or the equivalent snow load converted from the ultimate design wind speed.

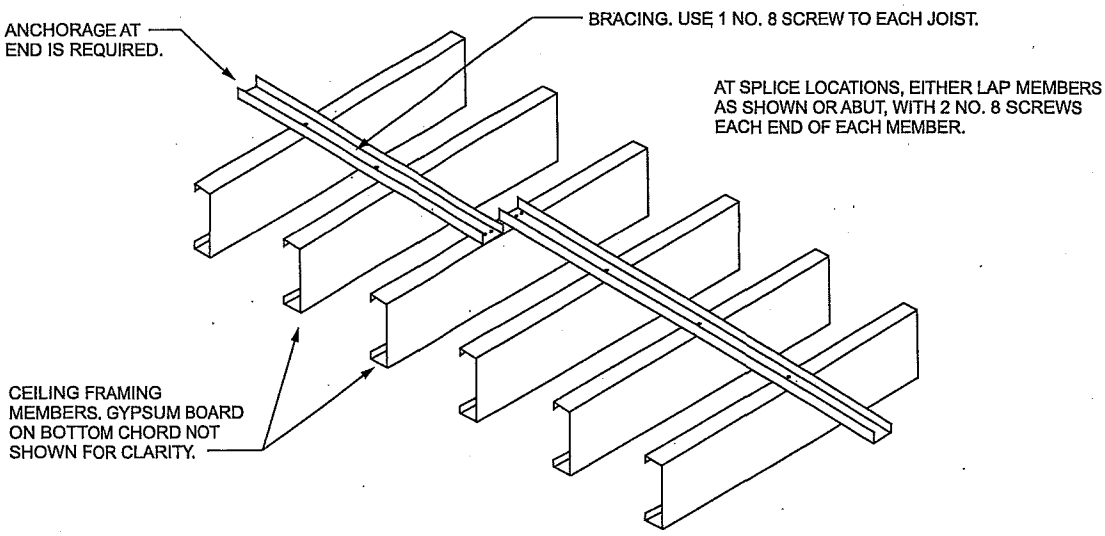

FIGURE R804.3.1.3(1)
CEILING JOIST TOP FLANGE BRACING WITH C-SHAPED, TRACK OR COLD-ROLLED CHANNEL

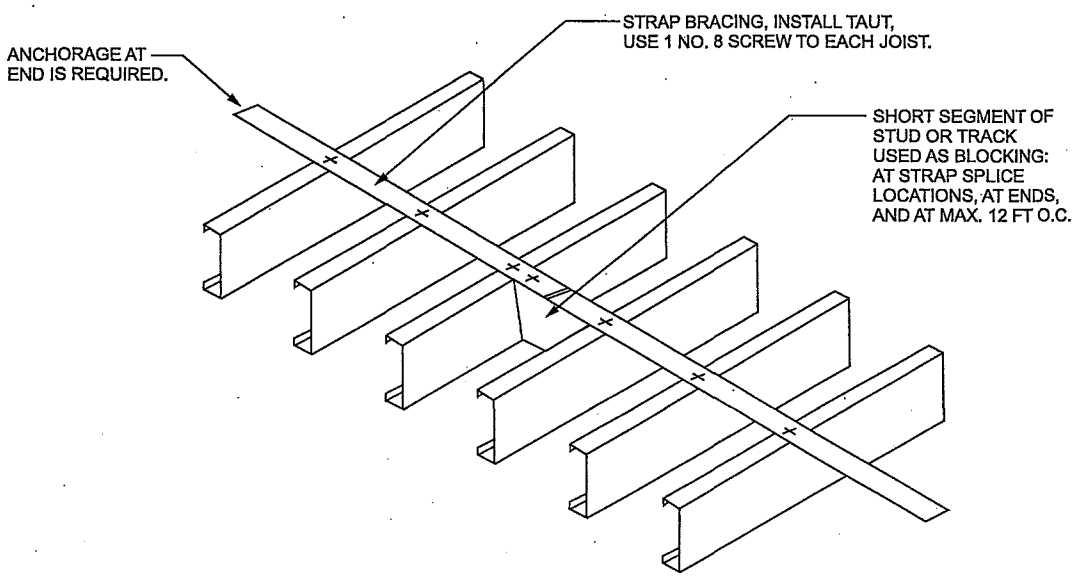

For SI: 1 foot = 304.8 mm.

FIGURE R804.3.1.3(2)
CEILING JOIST TOP FLANGE BRACING WITH CONTINUOUS STEEL STRAP AND BLOCKING

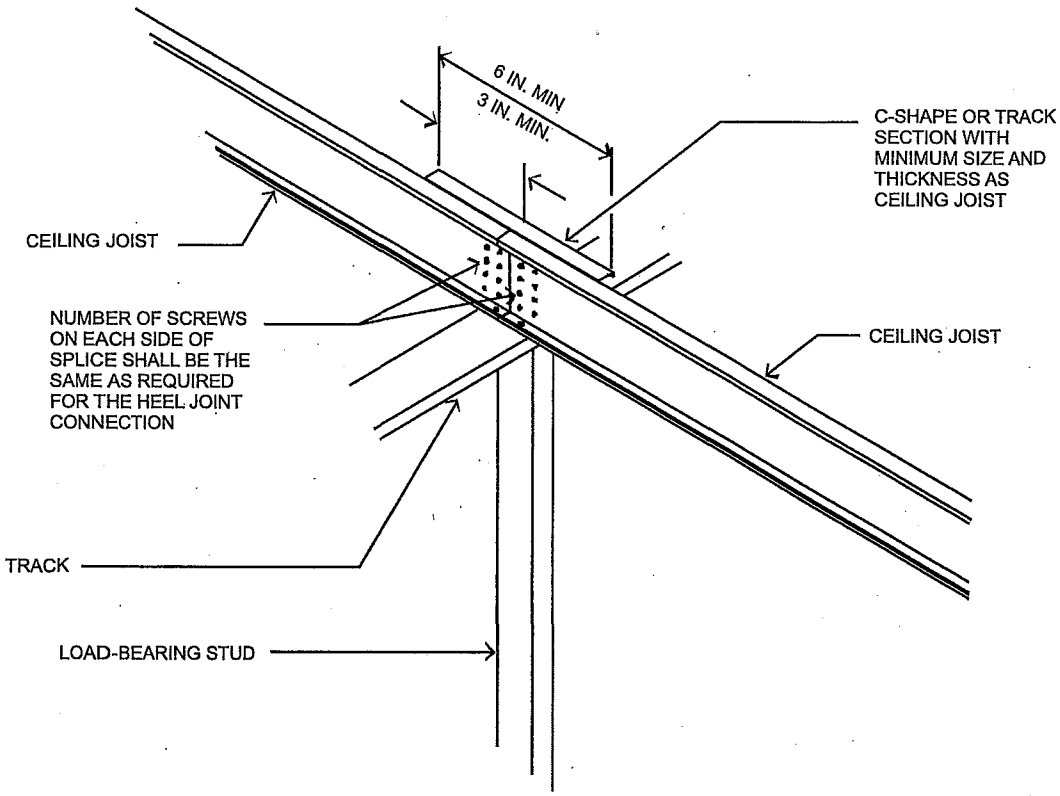

For SI: 1 inch = 25.4 mm.

FIGURE R804.3.1.4
SPLICED CEILING JOISTS

R804.3.2.1.1 Eave overhang. Eave overhangs shall not exceed 24 inches (610 mm) measured horizontally.

R804.3.2.1.2 Rake overhangs. Rake overhangs shall not exceed 12 inches (305 mm) measured horizontally. Outlookers at gable endwalls shall be installed in accordance with Figure R804.3.2.1.2.

R804.3.2.2 Roof rafter support brace. When used to reduce roof rafter spans in determining roof rafter sizes, a roof rafter support brace shall meet all of the following conditions:

1. Minimum 350S162-33 C-shaped brace member with maximum length of 8 feet (2438 mm).
2. Minimum brace member slope of 45 degrees (0.785 rad) to the horizontal.
3. Minimum connection of brace to a roof rafter and ceiling joist with four No.10 screws at each end.
4. Maximum 6 inches (152 mm) between brace/ceiling joist connection and load-bearing wall below.
5. Each roof rafter support brace greater than 4 feet (1219 mm) in length, shall be braced with a supplemental brace having a minimum size of 350S162-33 or 350T162-33 such that the maximum unsupported length of the roof rafter support brace is 4 feet (1219 mm). The supplemental brace shall be continuous and shall be connected to each roof rafter support brace using two No. 8 screws.

R804.3.2.3 Roof rafter splice. Roof rafters shall not be spliced.

R804.3.2.4 Roof rafter to ceiling joist and ridge member connection. Roof rafters shall be connected to a parallel ceiling joist to form a continuous tie between exterior walls in accordance with Figure R804.3.1.1 and Table R804.3.1.1(3). Ceiling joists shall be connected to the top track of the load-bearing wall in accordance with Table R804.3, either with the required number of No. 10 screws applied through the flange of the ceiling joist or by using a 54-mil (1.37 mm) clip angle with the required number of No.10 screws in each leg. Roof rafters shall be connected to a ridge member with a minimum 2-inch by 2-inch (51 mm by 51 mm) clip angle fastened with No. 10 screws to the ridge member in accordance with Figure R804.3.2.4 and Table R804.3.2.4. The clip angle shall have a steel thickness equivalent to or greater than the roof rafter thickness and shall extend the depth of the roof rafter member to the extent possible. The ridge member shall be fabricated from a C-shaped member and a track section that shall have a minimum size and steel thickness equivalent to or greater than that of adjacent roof rafters and shall be installed in accordance with Figure R804.3.2.4. The ridge member shall extend the full depth of the sloped roof rafter cut.

TABLE R804.3.2.1(1)
ROOF RAFTER SPANS[a, b, c, d]

MEMBER DESIGNATION	ALLOWABLE SPAN MEASURED HORIZONTALLY (feet - inches)							
	Ground snow load (psf)							
	20		30		50		70	
	Rafter spacing (inches)							
	16	24	16	24	16	24	16	24
550S162-33	14′-0″	11′-6″	11′-11″	9′-7″	9′-6″	7′-9″	8′-2″	6′-8″
550S162-43	16′-8″	13′-11″	14′-5″	11′-9″	11′-6″	9′-5″	9′-10″	8′-0″
550S162-54	17′-11″	15′-7″	15′-7″	13′-8″	13′-2″	11′-6″	11′-9″	10′-3″
550S162-68	19′-2″	16′-9″	16′-9″	14′-7″	14′-1″	12′-4″	12′-7″	11′-0″
800S162-33	16′-5″	13′-5″	13′-11″	11′-4″	11′-1″	8′-2″	9′-0″	6′-0″
800S162-43	19′-9″	16′-1″	16′-8″	13′-7″	13′-4″	10′-10″	11′-5″	9′-4″
800S162-54	24′-2″	21′-2″	21′-1″	18′-5″	17′-10″	14′-8″	15′-5″	12′-7″
800S162-68	25′-11″	22′-8″	22′-8″	19′-9″	19′-1″	16′-8″	17′-1″	14′-9″
1000S162-43	22′-3″	18′-2″	18′-9″	15′-8″	15′-0″	12′-3″	12′-10″	10′-6″
1000S162-54	29′-0″	24′-6″	25′-4″	20′-9″	20′-3″	16′-7″	17′-5″	14′-2″
1000S162-68	31′-2″	27′-3″	27′-3″	23′-9″	20′-0″	19′-6″	20′-6″	16′-8″
1200S162-54	33′-2″	27′-1″	28′-1″	22′-11″	22′-5″	18′-4″	19′-3″	15′-8″
1200S162-68	36′-4″	31′-9″	31′-9″	27′-0″	26′-5″	21′-6″	22′-6″	18′-6″

For SI: 1 inch = 25.4 mm, 1 foot = 304.8 mm, 1 pound per square foot = 0.0479 kPa.

a. Table provides maximum horizontal rafter spans in feet and inches for slopes between 3:12 and 12:12.

b. Deflection criteria: L/240 for live loads and L/180 for total loads.

c. Roof dead load = 12 psf.

d. Grade 33 ksi steel is permitted to be used for 33 mil and 43 mil thicknesses. Grade 50 ksi steel shall be used for 54 and 68 mil thicknesses.

2869

TABLE R804.3.2.1(2)
ULTIMATE DESIGN WIND SPEED TO EQUIVALENT SNOW LOAD CONVERSION

BASIC WIND SPEED AND EXPOSURE		EQUIVALENT GROUND SNOW LOAD (psf)									
		Roof slope									
Exp. B	Exp. C	3:12	4:12	5:12	6:12	7:12	8:12	9:12	10:12	11:12	12:12
85 mph	—	20	20	20	20	20	20	30	30	30	30
100 mph	85 mph	20	20	20	20	30	30	30	30	50	50
110 mph	100 mph	20	20	20	20	30	50	50	50	50	50
—	110 mph	30	30	30	50	50	50	70	70	70	—

For SI: 1 mile per hour = 0.447 m/s, 1 pound per square foot = 0.0479 kPa.

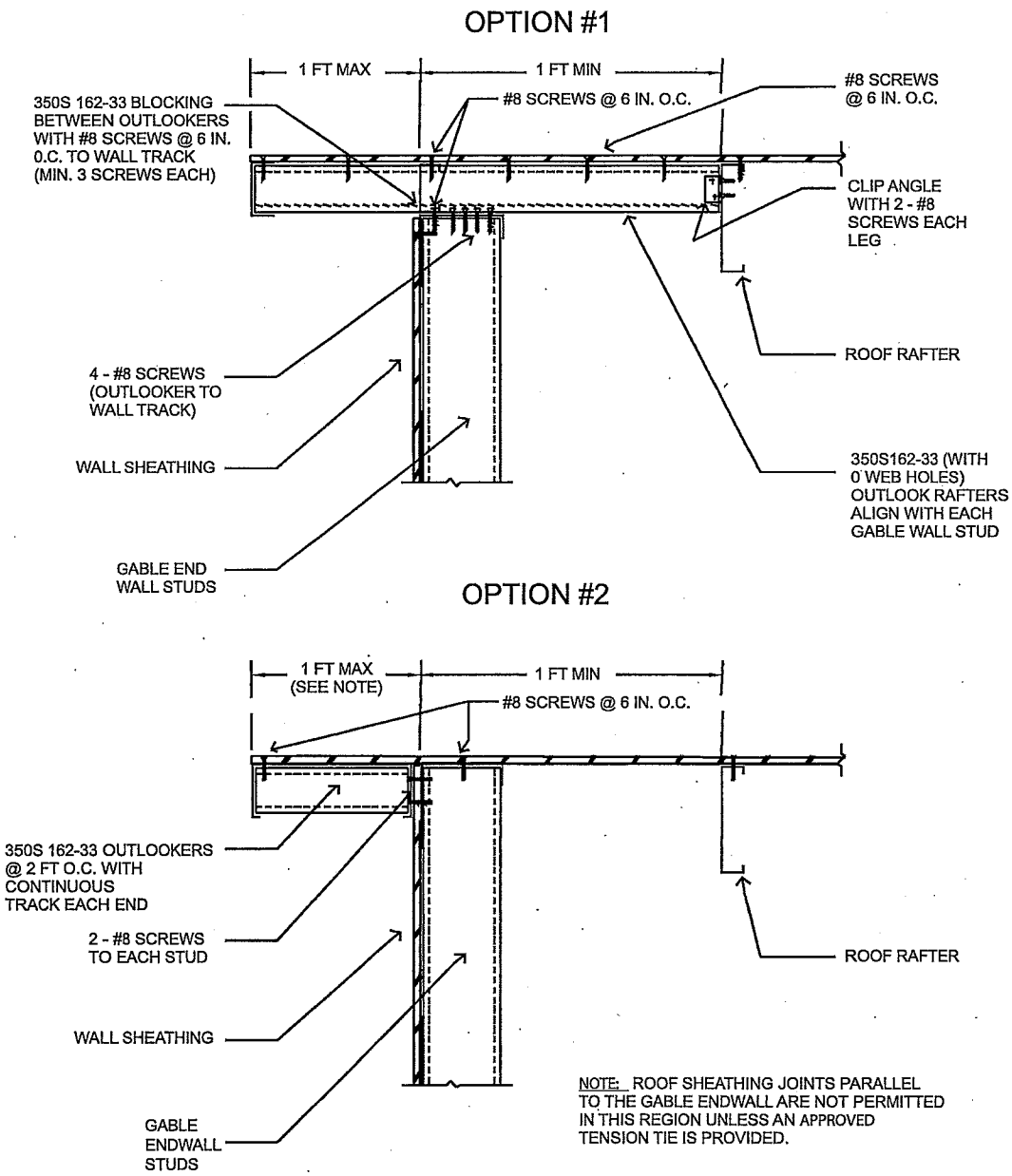

For SI: 1 inch = 25.4 mm, 1 foot = 304.8 mm.

FIGURE R804.3.2.1.2
GABLE ENDWALL OVERHANG DETAILS

2870

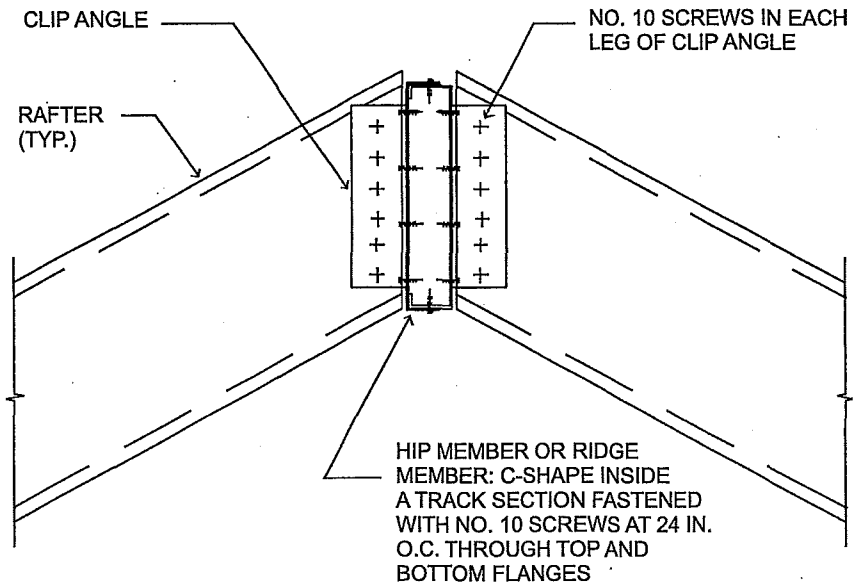

For SI: 1 inch = 25.4 mm.

FIGURE R804.3.2.4
RIDGE MEMBER CONNECTION

TABLE R804.3.2.4
SCREWS REQUIRED AT EACH LEG OF CLIP ANGLE FOR ROOF RAFTER TO RIDGE MEMBER CONNECTION[a]

BUILDING WIDTH (feet)	NUMBER OF SCREWS			
	Ground snow load (psf)			
	0 to 20	21 to 30	31 to 50	51 to 70
24	2	2	3	4
28	2	3	4	5
32	2	3	4	5
36	3	3	5	6
40	3	4	5	7

For SI: 1 inch = 25.4 mm, 1 foot = 304.8 mm, 1 pound per square foot = 0.0479 kPa.
a. Screws shall be No. 10 minimum.

R804.3.2.5 Roof rafter bottom flange bracing. The bottom flanges of roof rafters shall be continuously braced, at a maximum spacing of 8 feet (2440 mm) as measured parallel to the roof rafters, with one of the following members:

1. Minimum 33-mil (0.84 mm) C-shaped member.
2. Minimum 33-mil (0.84 mm) track section.
3. Minimum $1^1/_2$-inch by 33-mil (38 mm by 0.84 mm) steel strap.

The bracing element shall be fastened to the bottom flange of each roof rafter with one No. 8 screw and shall be fastened to blocking with two No. 8 screws. Blocking shall be installed between roof rafters in-line with the continuous bracing at a maximum spacing of 12 feet (3658 mm) measured perpendicular to the roof rafters. The ends of continuous bracing shall be fastened to blocking or anchored to a stable building component with two No. 8 screws.

R804.3.3 Cutting and notching. Flanges and lips of load-bearing, cold-formed steel roof framing members shall not be cut or notched.

R804.3.4 Headers. Roof-ceiling framing above wall openings shall be supported on headers. The allowable spans for headers in load-bearing walls shall not exceed the values set forth in Section R603.6 and Tables R603.6(1) through R603.6(6).

R804.3.5 Framing of openings in roofs and ceilings. Openings in roofs and ceilings shall be framed with header and trimmer joists. Header joist spans shall not exceed 4 feet (1219 mm) in length. Header and trimmer joists shall be fabricated from joist and track members having a minimum size and thickness equivalent to the adjacent ceiling joists or roof rafters and shall be installed in accordance with Figures R804.3.5(1) and R804.3.5(2). Each header joist shall be connected to trimmer joists with not less than four 2-inch by 2-inch (51 by 51 mm) clip angles. Each clip angle shall be fastened to both the header and trimmer joists with four No. 8 screws, evenly spaced, through each leg of the clip angle. The steel thickness of the clip angles shall be not less than that of the ceiling joist or roof rafter. Each track section for a built-up header or trimmer joist shall extend the full length of the joist (continuous).

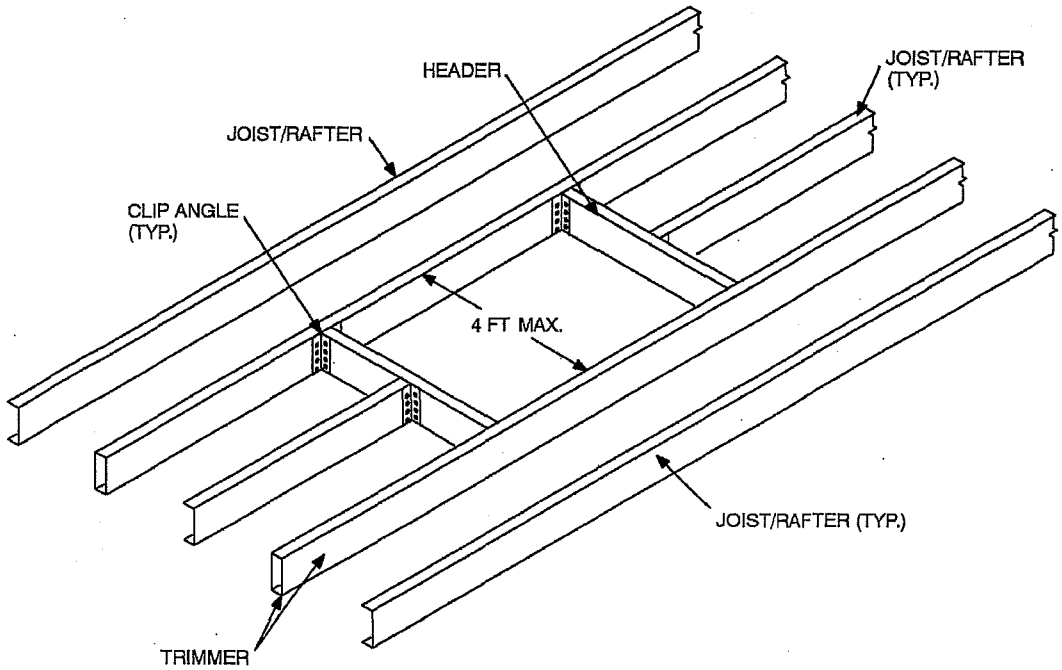

For SI: 1 foot = 304.8 mm.

FIGURE R804.3.5(1)
ROOF OR CEILING OPENING

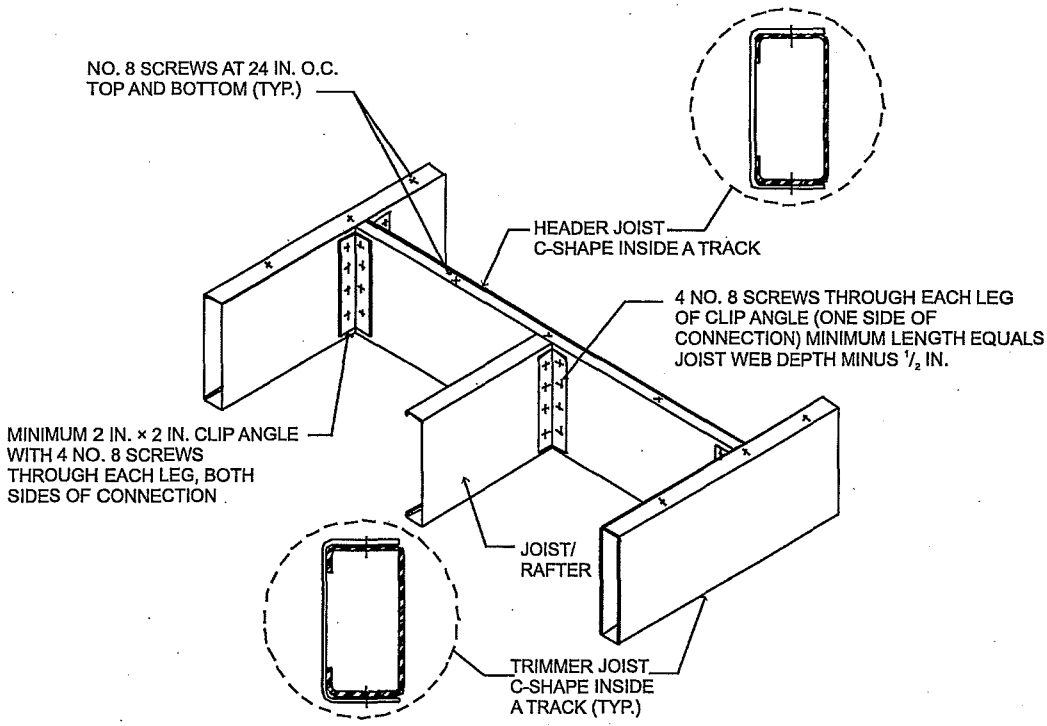

For SI: 1 inch = 25.4 mm.

FIGURE R804.3.5(2)
HEADER TO TRIMMER CONNECTION

2872

R804.3.6 Roof trusses. Cold-formed steel trusses shall be designed and installed in accordance with AISI S100, Section D4. In the absence of specific bracing requirements, trusses shall be braced in accordance with accepted industry practices, such as the SBCA *Cold-Formed Steel Building Component Safety Information (CFSBCSI) Guide to Good Practice for Handling, Installing & Bracing of Cold-Formed Steel Trusses.* Trusses shall be connected to the top track of the load-bearing wall in accordance with Table R804.3, either with two No. 10 screws applied through the flange of the truss or by using a 54-mil (1.37 mm) clip angle with two No. 10 screws in each leg.

R804.3.7 Ceiling and roof diaphragms. Ceiling and roof diaphragms shall be in accordance with this section.

R804.3.7.1 Ceiling diaphragms. At gable endwalls a ceiling *diaphragm* shall be provided by attaching a minimum $^1/_2$-inch (12.7 mm) gypsum board or a minimum $^3/_8$-inch (9.5 mm) wood structural panel sheathing, that complies with Section R803, to the bottom of ceiling joists or roof trusses and connected to wall framing in accordance with Figures R804.3.7.1(1) and R804.3.7.1(2), unless studs are designed as full height without bracing at the ceiling. Flat blocking shall consist of C-shaped or track section with a minimum thickness of 33 mils (0.84 mm). For a gypsum board sheathed ceiling, the diaphragm length shall be in accordance with Table R804.3.7.1. For a wood structural panel sheathed ceiling, the diaphragm length shall be not less than 12 feet (3658 mm) for building widths less than 36 feet (10 973 mm), or not less than 14 feet (4267 mm) for building widths greater than or equal to 36 feet (10 973 mm).

The ceiling diaphragm shall be secured with screws spaced at a maximum 6 inches (152 mm) o.c. at panel edges and a maximum 12 inches (305 mm) o.c. in the field. The required lengths in Table R804.3.7.1 for gypsum board sheathed ceiling diaphragms shall be permitted to be multiplied by 0.35 if all panel edges are blocked. Multiplying the required lengths in Table R804.3.7.1 for gypsum board sheathed ceiling diaphragms by 0.9 shall be permitted if all panel edges are secured with screws spaced at 4 inches (102 mm) o.c.

R804.3.7.2 Roof diaphragm. A roof *diaphragm* shall be provided by attaching a minimum of $^3/_8$-inch (9.5 mm) wood structural panel which complies with Section R803 to roof rafters or truss top chords in accordance with Table R804.3. Buildings with 3:1 or larger plan *aspect ratio* and with roof rafter slope (pitch) of 9:12 or larger shall have the roof rafters and ceiling joists blocked in accordance with Figure R804.3.7(2).

TABLE R804.3.7.1
REQUIRED LENGTHS FOR CEILING DIAPHRAGMS AT GABLE ENDWALLS GYPSUM BOARD SHEATHED, CEILING HEIGHT = 8 FEET[a, b, c, d, e, f, g]

EXPOSURE CATEGORY		ULTIMATE DESIGN WIND SPEED (mph)			
B		126	< 139	—	—
C		110	—	126	< 139
Roof pitch	Building endwall width (feet)	Minimum diaphragm length (feet)			
3:12 to 6:12	24 - 28	20	22	28	32
	> 28 - 32	22	28	32	38
	> 32 - 36	26	32	38	44
	> 36 - 40	30	36	44	50
6:12 to 9:12	> 24 - 28	22	26	32	36
	> 28 - 32	26	32	38	44
	> 32 - 36	32	38	44	52
	> 36 - 40	36	44	52	60
9:12 to 12:12	> 24 - 28	26	30	36	42
	> 28 - 32	30	36	42	50
	> 32 - 36	36	42	50	60
	> 36 - 40	42	50	60	70

For SI: 1 inch = 25.4 mm, 1 pound per square foot = 0.0479 kPa, 1 mile per hour = 0.447 m/s, 1 foot = 304.8 mm, 1 mil = 0.0254 mm.

a. Ceiling diaphragm is composed of $^1/_2$-inch gypsum board (min. thickness) secured with screws spaced at 6 inches o.c. at panel edges and 12 inches o.c. infield. Use No. 8 screws (min.) where framing members have a designation thickness of 54 mils or less and No. 10 screws (min.) where framing members have a designation thickness greater than 54 mils.

b. Maximum aspect ratio (length/width) of diaphragms is 2:1.

c. Building width is in the direction of horizontal framing members supported by the wall studs.

d. Required diaphragm lengths are to be provided at each end of the structure.

e. Multiplying required diaphragm lengths by 0.35 is permitted if all panel edges are blocked.

f. Multiplying required diaphragm lengths by 0.9 is permitted if all panel edges are secured with screws spaced at 4 inches o.c.

g. To determine the minimum diaphragm length for buildings with ceiling heights of 9 feet or 10 feet values in the table above shall be multiplied by 1.15.

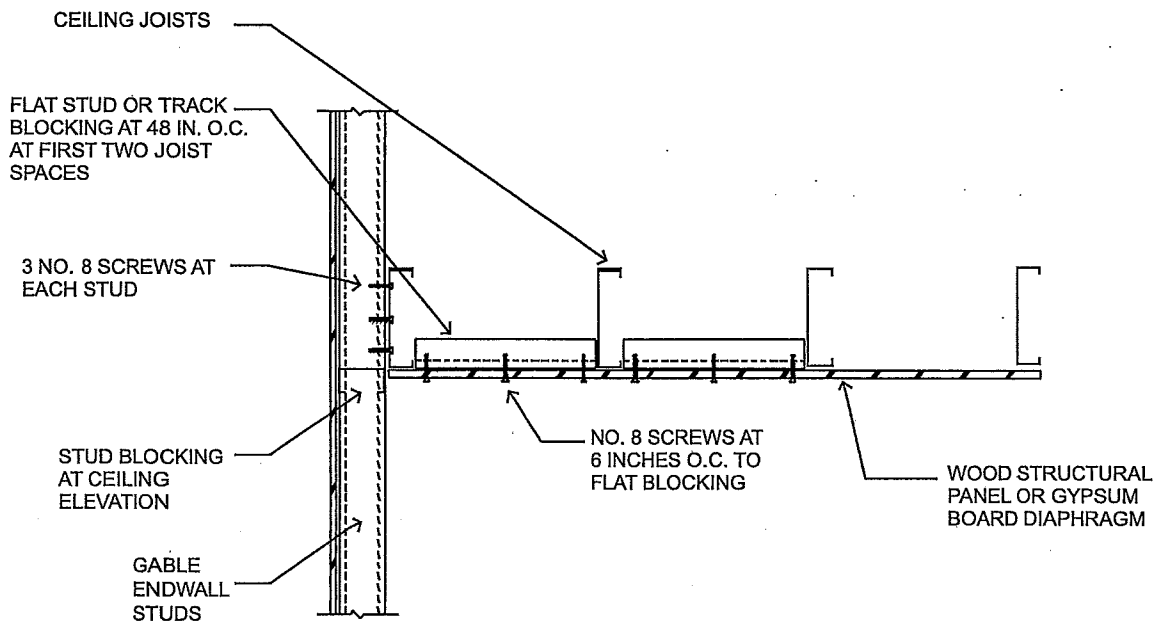

For SI: 1 inch = 25.4 mm.

FIGURE R804.3.7.1(1)
CEILING DIAPHRAGM TO GABLE ENDWALL DETAIL

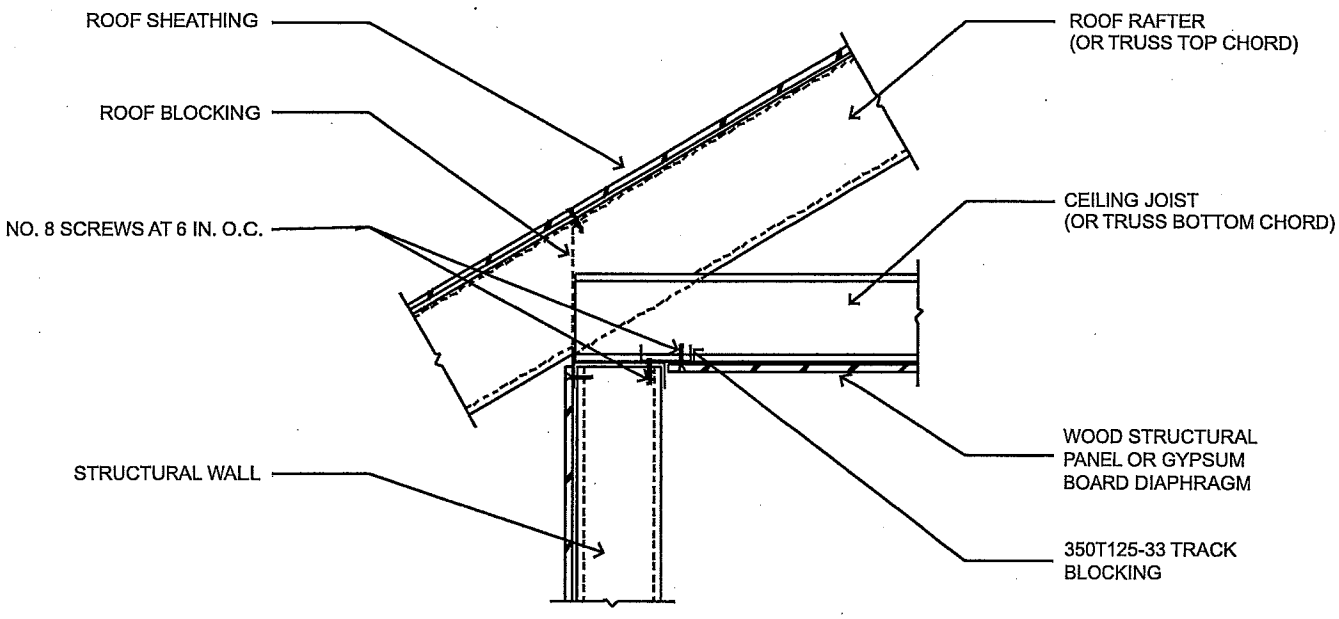

For SI: 1 inch = 25.4 mm.

FIGURE R804.3.7.1(2)
CEILING DIAPHRAGM TO SIDEWALL DETAIL

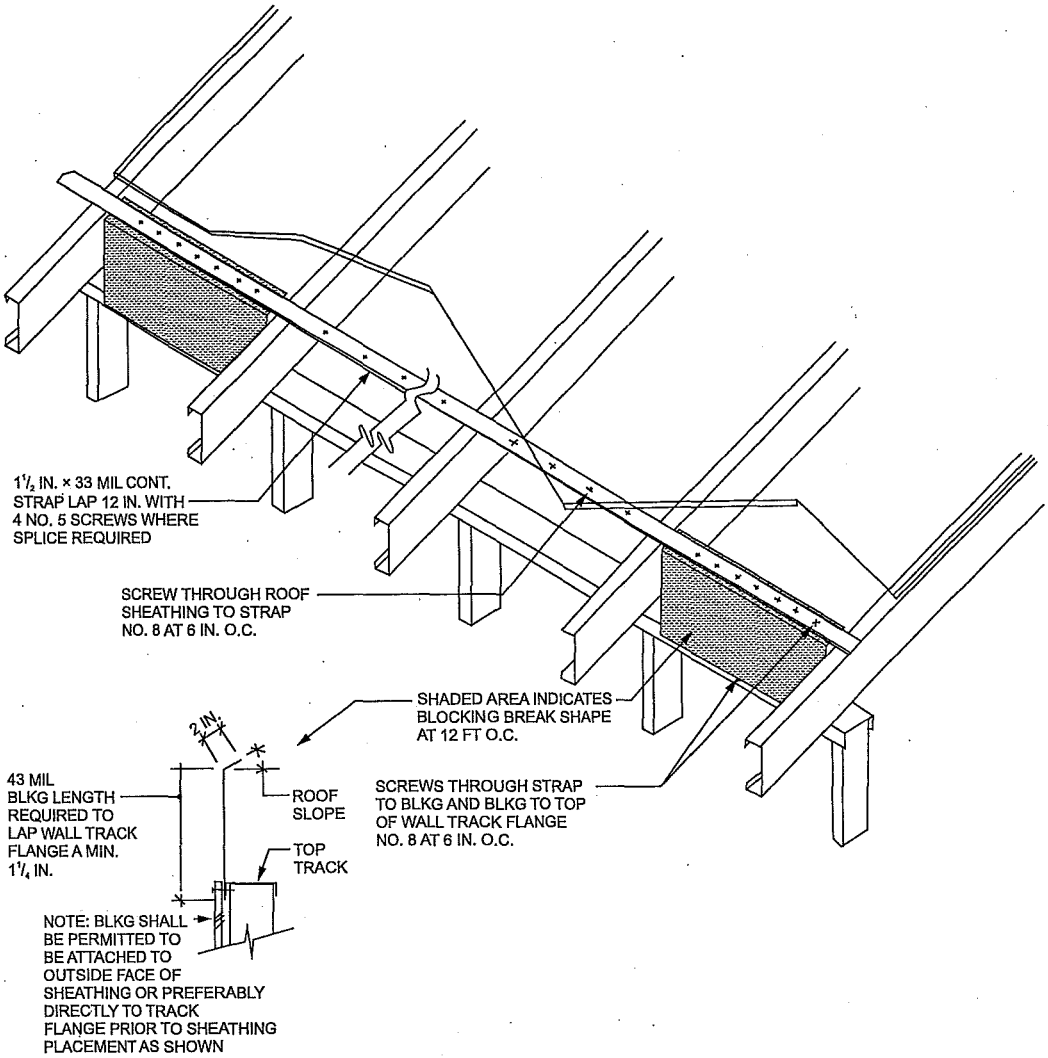

For SI: 1 mil = 0.0254 mm, 1 inch = 25.4 mm.

FIGURE R804.3.7(2)
ROOF BLOCKING DETAIL

R804.3.8 Roof tie-down. Roof assemblies shall be connected to walls below in accordance with Table R804.3. A continuous load path shall be provided to transfer uplift loads to the foundation.

SECTION R805
CEILING FINISHES

R805.1 Ceiling installation. Ceilings shall be installed in accordance with the requirements for interior wall finishes as provided in Section R702.

SECTION R806
ROOF VENTILATION

R806.1 Ventilation required. Enclosed attics and enclosed rafter spaces formed where ceilings are applied directly to the underside of roof rafters shall have cross ventilation for each separate space by ventilating openings protected against the entrance of rain or snow. Ventilation openings shall have a least dimension of $^1/_{16}$ inch (1.6 mm) minimum and $^1/_4$ inch (6.4 mm) maximum. Ventilation openings having a least dimension larger than $^1/_4$ inch (6.4 mm) shall be provided with corrosion-resistant wire cloth screening, hardware cloth or similar material with openings having a least dimension of $^1/_{16}$ inch (1.6 mm) minimum and $^1/_4$ inch (6.4 mm) maximum. Openings in roof framing members shall conform to the requirements of Section R802.7. Required ventilation openings shall open directly to the outside air.

R806.2 Minimum vent area. The minimum net free ventilating area shall be $^1/_{150}$ of the area of the vented space.

Exception: The minimum net free ventilation area shall be $^1/_{300}$ of the vented space provided one or more of the following conditions are met:

1. In Climate Zones 6, 7 and 8, a Class I or II vapor retarder is installed on the warm-in-winter side of the ceiling.

2. Not less than 40 percent and not more than 50 percent of the required ventilating area is provided by ventilators located in the upper portion of the attic or rafter space. Upper ventilators shall be located not more than 3 feet (914 mm) below the ridge or highest point of the space, measured vertically, with the balance of the required ventilation provided by eave or cornice vents. Where the location of wall or roof framing members conflicts with the installation of upper ventilators, installation more than 3 feet (914 mm) below the ridge or highest point of the space shall be permitted.

R806.3 Vent and insulation clearance. Where eave or cornice vents are installed, insulation shall not block the free flow of air. Not less than a 1-inch (25 mm) space shall be provided between the insulation and the roof sheathing and at the location of the vent.

R806.4 Installation and weather protection. Ventilators shall be installed in accordance with manufacturer's instructions. Installation of ventilators in roof systems shall be in accordance with the requirements of Section R903. Installation of ventilators in wall systems shall be in accordance with the requirements of Section R703.1.

R806.5 Unvented attic and unvented enclosed rafter assemblies. Unvented *attics* and unvented enclosed roof framing assemblies created by ceilings that are applied directly to the underside of the roof framing members and structural roof sheathing applied directly to the top of the roof framing members/rafters, shall be permitted where all the following conditions are met:

1. The unvented *attic* space is completely within the *building thermal envelope*.
2. No interior Class I vapor retarders are installed on the ceiling side (*attic* floor) of the unvented *attic* assembly or on the ceiling side of the unvented enclosed roof framing assembly.
3. Where wood shingles or shakes are used, a minimum $^1/_4$-inch (6.4 mm) vented airspace separates the shingles or shakes and the roofing underlayment above the structural sheathing.
4. In Climate Zones 5, 6, 7 and 8, any *air-impermeable insulation* shall be a Class II vapor retarder, or shall have a Class II vapor retarder coating or covering in direct contact with the underside of the insulation.
5. Insulation shall be located in accordance with the following:

5.1. Item 5.1.1, 5.1.2, 5.1.3 or 5.1.4 shall be met, depending on the air permeability of the insulation directly under the structural roof sheathing.

5.1.1. Where only *air-impermeable insulation* is provided, it shall be applied in direct contact with the underside of the structural roof sheathing.

5.1.2. Where *air-permeable insulation* is provided inside the building thermal envelope, it shall be installed in accordance with Section 5.1. In addition to the *air-permeable insulation* installed directly below the structural sheathing, rigid board or sheet insulation shall be installed directly above the structural roof sheathing in accordance with the *R*-values in Table R806.5 for condensation control.

5.1.3. Where both *air-impermeable* and *air-permeable insulation* are provided, the *air-impermeable insulation* shall be applied in direct contact with the underside of the structural roof sheathing in accordance with Item 5.1.1 and shall be in accordance with the *R*-values in Table R806.5 for condensation control. The *air-permeable insulation* shall be installed directly under the *air-impermeable insulation.*

5.1.4. Alternatively, sufficient rigid board or sheet insulation shall be installed directly above the structural roof sheathing to maintain the monthly average temperature of the underside of the structural roof sheathing above 45°F (7°C). For calculation purposes, an interior air temperature of 68°F (20°C) is assumed and the exterior air temperature is assumed to be the monthly average outside air temperature of the three coldest months.

5.2. Where preformed insulation board is used as the air-impermeable insulation layer, it shall be sealed at the perimeter of each individual sheet interior surface to form a continuous layer.

TABLE R806.5
INSULATION FOR CONDENSATION CONTROL

CLIMATE ZONE	MINIMUM RIGID BOARD ON AIR-IMPERMEABLE INSULATION *R*-VALUE[a, b]
2B and 3B tile roof only	0 (none required)
1, 2A, 2B, 3A, 3B, 3C	R-5
4C	R-10
4A, 4B	R-15
5	R-20
6	R-25
7	R-30
8	R-35

a. Contributes to but does not supersede the requirements in Section N1102.

b. Alternatively, sufficient continuous insulation shall be installed directly above the structural roof sheathing to maintain the monthly average temperature of the underside of the structural roof sheathing above 45°F (7°C). For calculation purposes, an interior air temperature of 68°F (20°C) is assumed and the exterior air temperature is assumed to be the monthly average outside air temperature of the three coldest months.

SECTION R807
ATTIC ACCESS

R807.1 Attic access. Buildings with combustible ceiling or roof construction shall have an *attic* access opening to *attic* areas that have a vertical height of 30 inches (762 mm) or greater over an area of not less than 30 square feet (2.8 m^2). The vertical height shall be measured from the top of the ceiling framing members to the underside of the roof framing members.

The rough-framed opening shall be not less than 22 inches by 30 inches (559 mm by 762 mm) and shall be located in a hallway or other readily accessible location. Where located in a wall, the opening shall be not less than 22 inches wide by 30 inches high (559 mm wide by 762 mm high). Where the access is located in a ceiling, minimum unobstructed headroom in the *attic* space shall be 30 inches (762 mm) at some point above the access measured vertically from the bottom of ceiling framing members. See Section M1305.1.3 for access requirements where mechanical *equipment* is located in *attics*.

CHAPTER 9

ROOF ASSEMBLIES

SECTION R901
GENERAL

R901.1 Scope. The provisions of this chapter shall govern the design, materials, construction and quality of roof assemblies.

SECTION R902
FIRE CLASSIFICATION

R902.1 Roofing covering materials. Roofs shall be covered with materials as set forth in Sections R904 and R905. Class A, B or C roofing shall be installed in jurisdictions designated by law as requiring their use or where the edge of the roof is less than 3 feet (914 mm) from a lot line. Class A, B and C roofing required by this section to be listed shall be tested in accordance with UL 790 or ASTM E 108.

Exceptions:

1. Class A roof assemblies include those with coverings of brick, masonry and exposed concrete roof deck.
2. Class A roof assemblies include ferrous or copper shingles or sheets, metal sheets and shingles, clay or concrete roof tile, or slate installed on noncombustible decks.
3. Class A roof assemblies include minimum 16 ounces per square foot copper sheets installed over combustible decks.
4. Class A roof assemblies include slate installed over underlayment over combustible decks.

R902.2 Fire-retardant-treated shingles and shakes. Fire-retardant-treated wood shakes and shingles shall be treated by impregnation with chemicals by the full-cell vacuum-pressure process, in accordance with AWPA C1. Each bundle shall be marked to identify the manufactured unit and the manufacturer, and shall be *labeled* to identify the classification of the material in accordance with the testing required in Section R902.1, the treating company and the quality control agency.

R902.3 Building-integrated photovoltaic product. Building-integrated photovoltaic products installed as the roof covering shall be tested, listed and labeled for fire classification in accordance with Section R902.1.

R902.4 Rooftop-mounted photovoltaic panels and modules. Rooftop-mounted photovoltaic panels and modules installed on or above the roof covering shall be tested, listed and identified with a fire classification in accordance with UL 1703. Class A, B or C photovoltaic panels and modules shall be installed in jurisdictions designated by law as requiring their use or where the edge of the roof is less than 3 feet (914 mm) from a lot line.

SECTION R903
WEATHER PROTECTION

R903.1 General. Roof decks shall be covered with *approved* roof coverings secured to the building or structure in accordance with the provisions of this chapter. Roof assemblies shall be designed and installed in accordance with this code and the *approved* manufacturer's instructions such that the roof assembly shall serve to protect the building or structure.

R903.2 Flashing. Flashings shall be installed in a manner that prevents moisture from entering the wall and roof through joints in copings, through moisture permeable materials and at intersections with parapet walls and other penetrations through the roof plane.

R903.2.1 Locations. Flashings shall be installed at wall and roof intersections, wherever there is a change in roof slope or direction and around roof openings. A flashing shall be installed to divert the water away from where the eave of a sloped roof intersects a vertical sidewall. Where flashing is of metal, the metal shall be corrosion resistant with a thickness of not less than 0.019 inch (0.5 mm) (No. 26 galvanized sheet).

R903.2.2 Crickets and saddles. A cricket or saddle shall be installed on the ridge side of any chimney or penetration more than 30 inches (762 mm) wide as measured perpendicular to the slope. Cricket or saddle coverings shall be sheet metal or of the same material as the roof covering.

Exception: Unit skylights installed in accordance with Section R308.6 and flashed in accordance with the manufacturer's instructions shall be permitted to be installed without a cricket or saddle.

R903.3 Coping. Parapet walls shall be properly coped with noncombustible, weatherproof materials of a width not less than the thickness of the parapet wall.

R903.4 Roof drainage. Unless roofs are sloped to drain over roof edges, roof drains shall be installed at each low point of the roof.

R903.4.1 Secondary (emergency overflow) drains or scuppers. Where roof drains are required, secondary emergency overflow roof drains or scuppers shall be provided where the roof perimeter construction extends above the roof in such a manner that water will be entrapped if the primary drains allow buildup for any reason. Overflow drains having the same size as the roof drains shall be installed with the inlet flow line located 2 inches (51 mm) above the low point of the roof, or overflow scuppers having three times the size of the roof drains and having a minimum opening height of 4 inches (102 mm) shall be installed in the adjacent parapet walls with the inlet flow located 2 inches (51 mm) above the low point of the roof served. The installation and sizing of overflow drains, leaders and conductors shall comply with Sections 1106 and 1108 of the *International Plumbing Code,* as applicable.

Overflow drains shall discharge to an *approved* location and shall not be connected to roof drain lines.

SECTION R904
MATERIALS

R904.1 Scope. The requirements set forth in this section shall apply to the application of roof covering materials specified herein. Roof assemblies shall be applied in accordance with this chapter and the manufacturer's installation instructions. Installation of roof assemblies shall comply with the applicable provisions of Section R905.

R904.2 Compatibility of materials. Roof assemblies shall be of materials that are compatible with each other and with the building or structure to which the materials are applied.

R904.3 Material specifications and physical characteristics. Roof covering materials shall conform to the applicable standards listed in this chapter.

R904.4 Product identification. Roof covering materials shall be delivered in packages bearing the manufacturer's identifying marks and *approved* testing agency *labels* required. Bulk shipments of materials shall be accompanied by the same information issued in the form of a certificate or on a bill of lading by the manufacturer.

SECTION R905
REQUIREMENTS FOR ROOF COVERINGS

R905.1 Roof covering application. Roof coverings shall be applied in accordance with the applicable provisions of this section and the manufacturer's installation instructions. Unless otherwise specified in this section, roof coverings shall be installed to resist the component and cladding loads specified in Table R301.2(2), adjusted for height and exposure in accordance with Table R301.2(3).

R905.1.1 Underlayment. Underlayment for asphalt shingles, clay and concrete tile, metal roof shingles, mineral-surfaced roll roofing, slate and slate-type shingles, wood shingles, wood shakes and metal roof panels shall conform to the applicable standards listed in this chapter. Underlayment materials required to comply with ASTM D 226, D 1970, D 4869 and D 6757 shall bear a label indicating compliance to the standard designation and, if applicable, type classification indicated in Table R905.1.1(1). Underlayment shall be applied in accordance with Table R905.1.1(2). Underlayment shall be attached in accordance with Table R905.1.1(3).

Exceptions:

1. As an alternative, self-adhering polymer-modified bitumen underlayment complying with ASTM D 1970 installed in accordance with both the underlayment manufacturer's and roof covering manufacturer's instructions for the deck material, roof ventilation configuration and climate exposure for the roof covering to be installed, shall be permitted.
2. As an alternative, a minimum 4-inch-wide (102 mm) strip of self-adhering polymer-modified bitumen membrane complying with ASTM D 1970, installed in accordance with the manufacturer's instructions for the deck material, shall be applied over all joints in the roof decking. An approved underlayment for the applicable roof covering for maximum ultimate design wind speeds, V_{ult}, less than 140 miles per hour shall be applied over the entire roof over the 4-inch-wide (102 mm) membrane strips.

TABLE R905.1.1(1)
UNDERLAYMENT TYPES

ROOF COVERING	SECTION	MAXIMUM ULTIMATE DESIGN WIND SPEED, V_{ult} < 140 MPH	MAXIMUM ULTIMATE DESIGN WIND SPEED, V_{ult} ≥ 140 MPH
Asphalt shingles	R905.2	ASTM D 226 Type I ASTM D 4869 Type I, II, III or IV ASTM D 6757	ASTM D 226 Type II ASTM D 4869 Type IV ASTM D 6757
Clay and concrete tile	R905.3	ASTM D 226 Type II ASTM D 2626 Type I ASTM D 6380 Class M mineral-surfaced roll roofing	ASTM D 226 Type II ASTM D 2626 Type I ASTM D 6380 Class M mineral-surfaced roll roofing
Metal roof shingles	R905.4	ASTM D 226 Type I or II ASTM D 4869 Type I, II, III or IV	ASTM D 226 Type II ASTM D 4869 Type IV
Mineral-surfaced roll roofing	R905.5	ASTM D 226 Type I or II ASTM D 4869 Type I, II, III or IV	ASTM D 226 Type II ASTM D 4869 Type IV
Slate and slate-type shingles	R905.6	ASTM D 226 Type I ASTM D 4869 Type I, II, III or IV	ASTM D 226 Type II ASTM D 4869 Type IV
Wood shingles	R905.7	ASTM D 226 Type I or II ASTM D 4869 Type I, II, III or IV	ASTM D 226 Type II ASTM D 4869 Type IV
Wood shakes	R905.8	ASTM D 226 Type I or II ASTM D 4869 Type I, II, III or IV	ASTM D 226 Type II ASTM D 4869 Type IV
Metal panels	R905.10	Manufacturer's instructions	ASTM D 226 Type II ASTM D 4869 Type IV

TABLE R905.1.1(2)
UNDERLAYMENT APPLICATION

ROOF COVERING	SECTION	MAXIMUM ULTIMATE DESIGN WIND SPEED, V_{ult} < 140 MPH	MAXIMUM ULTIMATE DESIGN WIND SPEED, V_{ult} ≥ 140 MPH
Asphalt shingles	R905.2	For roof slopes from two units vertical in 12 units horizontal (2:12), up to four units vertical in 12 units horizontal (4:12), underlayment shall be two layers applied in the following manner: apply a 19-inch strip of underlayment felt parallel to and starting at the eaves. Starting at the eave, apply 36-inch-wide sheets of underlayment, overlapping successive sheets 19 inches. Distortions in the underlayment shall not interfere with the ability of the shingles to seal. For roof slopes of four units vertical in 12 units horizontal (4:12) or greater, underlayment shall be one layer applied in the following manner: underlayment shall be applied shingle fashion, parallel to and starting from the eave and lapped 2 inches, Distortions in the underlayment shall not interfere with the ability of the shingles to seal. End laps shall be 4 inches and shall be offset by 6 feet.	Same as Maximum Ultimate Design Wind Speed, V_{ult} < 140 mph except all laps shall be not less than 4 inches.
Clay and concrete tile	R905.3	For roof slopes from two and one-half units vertical in 12 units horizontal ($2^1/_2$:12), up to four units vertical in 12 units horizontal (4:12), underlayment shall be a minimum of two layers applied as follows: starting at the eave, apply a 19-inch strip of underlayment parallel with the eave. Starting at the eave, apply 36-inch-wide strips of underlayment felt, overlapping successive sheets 19 inches. For roof slopes of four units vertical in 12 units horizontal (4:12) or greater, underlayment shall be a minimum of one layer of underlayment felt applied shingle fashion, parallel to and starting from the eaves and lapped 2 inches. End laps shall be 4 inches and shall be offset by 6 feet.	Same as Maximum Ultimate Design Wind Speed, V_{ult} < 140 mph except all laps shall be not less than 4 inches.
Metal roof shingles	R905.4	Apply in accordance with the manufacturer's installation instructions.	For roof slopes from two units vertical in 12 units horizontal (2:12), up to four units vertical in 12 units horizontal (4:12), underlayment shall be two layers applied in the following manner: apply a 19-inch strip of underlayment felt parallel to and starting at the eaves. Starting at the eave, apply 36-inch-wide sheets of underlayment, overlapping successive sheets 19 inches, and fastened sufficiently to hold in place. For roof slopes of four units vertical in 12 units horizontal (4:12) or greater, underlayment shall be one layer applied in the following manner: underlayment shall be applied shingle fashion, parallel to and starting from the eave and lapped 4 inches. End laps shall be 4 inches and shall be offset by 6 feet.
Mineral-surfaced roll roofing	R905.5		
Slate and slate-type shingles	R905.6		
Wood shingles	R905.7		
Wood shakes	R905.8		
Metal panels	R905.10		

For SI: 1 inch = 25.4 mm, 1 foot = 304.8 mm.

TABLE R905.1.1(3)
UNDERLAYMENT ATTACHMENT

ROOF COVERING	SECTION	MAXIMUM ULTIMATE DESIGN WIND SPEED, V_{ult} < 140 MPH	MAXIMUM ULTIMATE DESIGN WIND SPEED, V_{ult} ≥ 140 MPH
Asphalt shingles	R905.2	Fastened sufficiently to hold in place	The underlayment shall be attached with corrosion-resistant fasteners in a grid pattern of 12 inches between side laps with a 6-inch spacing at the side laps. Underlayment shall be attached using metal or plastic cap nails or cap staples with a nominal cap diameter of not less than 1 inch. Metal caps shall have a thickness of not less than 32-gage sheet metal. Power-driven metal caps shall have a minimum thickness of 0.010 inch. Minimum thickness of the outside edge of plastic caps shall be 0.035 inch. The cap nail shank shall be not less than 0.083 inch for ring shank cap nails and 0.091 inch for smooth shank cap nails. Staples shall be not less than 21 gage. Cap nail shank and cap staple legs shall have a length sufficient to penetrate through the roof sheathing or not less than $^3/_4$ inch into the roof sheathing.
Clay and concrete tile	R905.3		
Metal roof shingles	R905.4	Manufacturer's installation instructions.	The underlayment shall be attached with corrosion-resistant fasteners in a grid pattern of 12 inches between side laps with a 6-inch spacing at the side laps. Underlayment shall be attached using metal or plastic cap nails or cap staples with a nominal cap diameter of not less than 1 inch. Metal caps shall have a thickness of at least 32-gage sheet metal. Power-driven metal caps shall have a minimum thickness of 0.010 inch. Minimum thickness of the outside edge of plastic caps shall be 0.035 inch. The cap nail shank shall be not less than 0.083 inch for ring shank cap nails and 0.091 inch for smooth shank cap nails. Staples shall be not less than 21 gage. Cap nail shank and cap staple legs shall have a length sufficient to penetrate through the roof sheathing or not less than $^3/_4$ inch into the roof sheathing.
Mineral-surfaced roll roofing	R905.5		
Slate and slate-type shingles	R905.6		
Wood shingles	R905.7		
Wood shakes	R905.8		
Metal panels	R905.10		

For SI: 1 inch = 25.4 mm.

R905.1.2 Ice barriers. In areas where there has been a history of ice forming along the eaves causing a backup of water as designated in Table R301.2(1), an ice barrier shall be installed for asphalt shingles, metal roof shingles, mineral-surfaced roll roofing, slate and slate-type shingles, wood shingles and wood shakes. The ice barrier shall consist of not fewer than two layers of underlayment cemented together, or a self-adhering polymer-modified bitumen sheet shall be used in place of normal underlayment and extend from the lowest edges of all roof surfaces to a point not less than 24 inches (610 mm) inside the exterior wall line of the building. On roofs with slope equal to or greater than 8 units vertical in 12 units horizontal, the ice barrier shall also be applied not less than 36 inches (914 mm) measured along the roof slope from the eave edge of the building.

Exception: Detached accessory structures not containing conditioned floor area.

R905.2 Asphalt shingles. The installation of asphalt shingles shall comply with the provisions of this section.

R905.2.1 Sheathing requirements. Asphalt shingles shall be fastened to solidly sheathed decks.

R905.2.2 Slope. Asphalt shingles shall be used only on roof slopes of two units vertical in 12 units horizontal (2:12) or greater. For roof slopes from two units vertical in 12 units horizontal (2:12) up to four units vertical in 12 units horizontal (4:12), double underlayment application is required in accordance with Section R905.1.1.

R905.2.3 Underlayment. Underlayment shall comply with Section R905.1.1.

R905.2.4 Asphalt shingles. Asphalt shingles shall comply with ASTM D 3462.

R905.2.4.1 Wind resistance of asphalt shingles. Asphalt shingles shall be tested in accordance with ASTM D 7158. Asphalt shingles shall meet the classification requirements of Table R905.2.4.1 for the appropriate ultimate design wind speed. Asphalt shingle packaging shall bear a label to indicate compliance with ASTM D 7158 and the required classification in Table R905.2.4.1.

Exception: Asphalt shingles not included in the scope of ASTM D 7158 shall be tested and labeled to indicate compliance with ASTM D 3161 and the required classification in Table R905.2.4.1.

R905.2.5 Fasteners. Fasteners for asphalt shingles shall be galvanized steel, stainless steel, aluminum or copper roofing nails, minimum 12-gage [0.105 inch (3 mm)] shank with a minimum $^3/_8$-inch-diameter (9.5 mm) head, complying with ASTM F 1667, of a length to penetrate through the roofing materials and not less than $^3/_4$ inch (19.1 mm) into the roof sheathing. Where the roof sheathing is less than $^3/_4$ inch (19.1 mm) thick, the fasteners shall penetrate through the sheathing.

R905.2.6 Attachment. Asphalt shingles shall have the minimum number of fasteners required by the manufacturer, but not less than four fasteners per strip shingle or two fasteners per individual shingle. Where the roof slope exceeds 21 units vertical in 12 units horizontal (21:12, 175-percent slope), shingles shall be installed as required by the manufacturer.

R905.2.7 Ice barrier. Where required, ice barriers shall comply with Section R905.1.2.

R905.2.8 Flashing. Flashing for asphalt shingles shall comply with this section.

R905.2.8.1 Base and cap flashing. Base and cap flashing shall be installed in accordance with manufacturer's instructions. Base flashing shall be of either corrosion-resistant metal of minimum nominal 0.019-inch (0.5 mm) thickness or mineral-surfaced roll roofing weighing not less than 77 pounds per 100 square feet (4 kg/m^2). Cap flashing shall be corrosion-resistant metal of minimum nominal 0.019-inch (0.5 mm) thickness.

TABLE R905.2.4.1
CLASSIFICATION OF ASPHALT ROOF SHINGLES

MAXIMUM ULTIMATE DESIGN WIND SPEED, V_{ult} FROM FIGURE R301.2(4)A (mph)	MAXIMUM BASIC WIND SPEED, V_{ASD} FROM TABLE R301.2.1.3 (mph)	ASTM D 7158[a] SHINGLE CLASSIFICATION	ASTM D 3161 SHINGLE CLASSIFICATION
110	85	D, G or H	A, D or F
116	90	D, G or H	A, D or F
129	100	G or H	A, D or F
142	110	G or H	F
155	120	G or H	F
168	130	H	F
181	140	H	F
194	150	H	F

For SI: 1 foot = 304.8 mm; 1 mph = 0.447 m/s.

a. The standard calculations contained in ASTM D 7158 assume Exposure Category B or C and building height of 60 feet or less. Additional calculations are required for conditions outside of these assumptions.

R905.2.8.2 Valleys. Valley linings shall be installed in accordance with the manufacturer's instructions before applying shingles. Valley linings of the following types shall be permitted:

1. For open valleys (valley lining exposed) lined with metal, the valley lining shall be not less than 24 inches (610 mm) wide and of any of the corrosion-resistant metals in Table R905.2.8.2.
2. For open valleys, valley lining of two plies of mineral-surfaced roll roofing, complying with ASTM D 3909 or ASTM D 6380 Class M, shall be permitted. The bottom layer shall be 18 inches (457 mm) and the top layer not less than 36 inches (914 mm) wide.
3. For closed valleys (valley covered with shingles), valley lining of one ply of smooth roll roofing complying with ASTM D 6380 and not less than 36 inches wide (914 mm) or valley lining as described in Item 1 or 2 shall be permitted. Self-adhering polymer modified bitumen underlayment complying with ASTM D 1970 shall be permitted in lieu of the lining material.

R905.2.8.3 Sidewall flashing. Base flashing against a vertical sidewall shall be continuous or step flashing and shall be not less than 4 inches (102 mm) in height and 4 inches (102 mm) in width and shall direct water away from the vertical sidewall onto the roof or into the gutter. Where siding is provided on the vertical sidewall, the vertical leg of the flashing shall be continuous under the siding. Where anchored masonry veneer is provided on the vertical sidewall, the base flashing shall be provided in accordance with this section and counterflashing shall be provided in accordance with Section R703.7.2.2. Where exterior plaster or adhered masonry veneer is provided on the vertical sidewall, the base flashing shall be provided in accordance with this section and Section R703.6.3.

R905.2.8.4 Other flashing. Flashing against a vertical front wall, as well as soil stack, vent pipe and chimney flashing, shall be applied in accordance with the asphalt shingle manufacturer's printed instructions.

R905.2.8.5 Drip edge. A drip edge shall be provided at eaves and rake edges of shingle roofs. Adjacent segments of drip edge shall be overlapped not less than 2 inches (51 mm). Drip edges shall extend not less than $^1/_4$ inch (6.4 mm) below the roof sheathing and extend up back onto the roof deck not less than 2 inches (51 mm). Drip edges shall be mechanically fastened to the roof deck at not more than 12 inches (305 mm) o.c. with fasteners as specified in Section R905.2.5. Underlayment shall be installed over the drip edge along eaves and under the underlayment along rake edges.

R905.3 Clay and concrete tile. The installation of clay and concrete tile shall comply with the provisions of this section.

R905.3.1 Deck requirements. Concrete and clay tile shall be installed only over solid sheathing or spaced structural sheathing boards.

R905.3.2 Deck slope. Clay and concrete roof tile shall be installed on roof slopes of two and one-half units vertical in 12 units horizontal ($2^1/_2$:12) or greater. For roof slopes from two and one-half units vertical in 12 units horizontal ($2^1/_2$:12) to four units vertical in 12 units horizontal (4:12), double underlayment application is required in accordance with Section R905.3.3.

R905.3.3 Underlayment. Underlayment shall comply with Section R905.1.1.

R905.3.4 Clay tile. Clay roof tile shall comply with ASTM C 1167.

R905.3.5 Concrete tile. Concrete roof tile shall comply with ASTM C 1492.

R905.3.6 Fasteners. Nails shall be corrosion resistant and not less than 11 gage, $^5/_{16}$-inch (11 mm) head, and of sufficient length to penetrate the deck not less than $^3/_4$ inch (19 mm) or through the thickness of the deck, whichever is less. Attaching wire for clay or concrete tile shall not be smaller than 0.083 inch (2 mm). Perimeter fastening areas include three tile courses but not less than 36 inches (914

TABLE R905.2.8.2
VALLEY LINING MATERIAL

MATERIAL	MINIMUM THICKNESS (inches)	GAGE	WEIGHT (pounds)
Cold-rolled copper	0.0216 nominal	—	ASTM B 370, 16 oz. per square foot
Lead-coated copper	0.0216 nominal	—	ASTM B 101, 16 oz. per square foot
High-yield copper	0.0162 nominal	—	ASTM B 370, 12 oz. per square foot
Lead-coated high-yield copper	0.0162 nominal	—	ASTM B 101, 12 oz. per square foot
Aluminum	0.024	—	—
Stainless steel	—	28	—
Galvanized steel	0.0179	26 (zinc coated G90)	—
Zinc alloy	0.027	—	—
Lead	—	—	$2^1/_2$
Painted terne	—	—	20

For SI: 1 inch = 25.4 mm, 1 pound = 0.454 kg.

mm) from either side of hips or ridges and edges of eaves and gable rakes.

R905.3.7 Application. Tile shall be applied in accordance with this chapter and the manufacturer's installation instructions, based on the following:

1. Climatic conditions.
2. Roof slope.
3. Underlayment system.
4. Type of tile being installed.

Clay and concrete roof tiles shall be fastened in accordance with this section and the manufacturer's installation instructions. Perimeter tiles shall be fastened with not less than one fastener per tile. Tiles with installed weight less than 9 pounds per square foot (0.4 kg/m^2) require not less than one fastener per tile regardless of roof slope. Clay and concrete roof tile attachment shall be in accordance with the manufacturer's installation instructions where applied in areas where the ultimate design wind speed exceeds 130 miles per hour (58 m/s) and on buildings where the roof is located more than 40 feet (12 192 mm) above grade. In areas subject to snow, not less than two fasteners per tile are required. In other areas, clay and concrete roof tiles shall be attached in accordance with Table R905.3.7.

TABLE R905.3.7
CLAY AND CONCRETE TILE ATTACHMENT

SHEATHING	ROOF SLOPE	NUMBER OF FASTENERS
Solid without battens	All	One per tile
Spaced or solid with battens and slope < 5:12	Fasteners not required	—
Spaced sheathing without battens	5:12 ≤ slope < 12:12	One per tile/every other row
	12:12 ≤ slope < 24:12	One per tile

R905.3.8 Flashing. At the juncture of roof vertical surfaces, flashing and counterflashing shall be provided in accordance with this chapter and the manufacturer's installation instructions and, where of metal, shall be not less than 0.019 inch (0.5 mm) (No. 26 galvanized sheet gage) corrosion-resistant metal. The valley flashing shall extend not less than 11 inches (279 mm) from the centerline each way and have a splash diverter rib not less than 1 inch (25 mm) in height at the flow line formed as part of the flashing. Sections of flashing shall have an end lap of not less than 4 inches (102 mm). For roof slopes of three units vertical in 12 units horizontal (25-percent slope) and greater, valley flashing shall have a 36-inch-wide (914 mm) underlayment of one layer of Type I underlayment running the full length of the valley, in addition to other required underlayment. In areas where the average daily temperature in January is 25°F (-4°C) or less, metal valley flashing underlayment shall be solid-cemented to the roofing underlayment for slopes less than seven units vertical in 12 units horizontal (58-percent slope) or be of self-adhering polymer modified bitumen sheet.

R905.4 Metal roof shingles. The installation of metal roof shingles shall comply with the provisions of this section.

R905.4.1 Deck requirements. Metal roof shingles shall be applied to a solid or closely fitted deck, except where the roof covering is specifically designed to be applied to spaced sheathing.

R905.4.2 Deck slope. Metal roof shingles shall not be installed on roof slopes below three units vertical in 12 units horizontal (25-percent slope).

R905.4.3 Underlayment. Underlayment shall comply with Section R905.1.1.

R905.4.3.1 Ice barrier. Where required, ice barriers shall comply with Section R905.1.2.

R905.4.4 Material standards. Metal roof shingle roof coverings shall comply with Table R905.10.3(1). The materials used for metal roof shingle roof coverings shall be naturally corrosion resistant or be made corrosion resistant in accordance with the standards and minimum thicknesses listed in Table R905.10.3(2).

R905.4.5 Application. Metal roof shingles shall be secured to the roof in accordance with this chapter and the *approved* manufacturer's installation instructions.

R905.4.6 Flashing. Roof valley flashing shall be of corrosion-resistant metal of the same material as the roof covering or shall comply with the standards in Table R905.10.3(1). The valley flashing shall extend not less than 8 inches (203 mm) from the centerline each way and shall have a splash diverter rib not less than $^3/_4$ inch (19 mm) in height at the flow line formed as part of the flashing. Sections of flashing shall have an end lap of not less than 4 inches (102 mm). The metal valley flashing shall have a 36-inch-wide (914 mm) underlayment directly under it consisting of one layer of underlayment running the full length of the valley, in addition to underlayment required for metal roof shingles. In areas where the average daily temperature in January is 25°F (-4°C) or less, the metal valley flashing underlayment shall be solid cemented to the roofing underlayment for roof slopes under seven units vertical in 12 units horizontal (58-percent slope) or self-adhering polymer modified bitumen sheet.

R905.5 Mineral-surfaced roll roofing. The installation of mineral-surfaced roll roofing shall comply with this section.

R905.5.1 Deck requirements. Mineral-surfaced roll roofing shall be fastened to solidly sheathed roofs.

R905.5.2 Deck slope. Mineral-surfaced roll roofing shall not be applied on roof slopes below one unit vertical in 12 units horizontal (8-percent slope).

R905.5.3 Underlayment. Underlayment shall comply with Section R905.1.1.

R905.5.3.1 Ice barrier. Where required, ice barriers shall comply with Section R905.1.2.

R905.5.4 Material standards. Mineral-surfaced roll roofing shall conform to ASTM D 3909 or ASTM D 6380, Class M.

R905.5.5 Application. Mineral-surfaced roll roofing shall be installed in accordance with this chapter and the manufacturer's instructions.

R905.6 Slate shingles. The installation of slate shingles shall comply with the provisions of this section.

R905.6.1 Deck requirements. Slate shingles shall be fastened to solidly sheathed roofs.

R905.6.2 Deck slope. Slate shingles shall be used only on slopes of four units vertical in 12 units horizontal (33-percent slope) or greater.

R905.6.3 Underlayment. Underlayment shall comply with Section R905.1.1.

R905.6.3.1 Ice barrier. Where required, ice barriers shall comply with Section R905.1.2.

R905.6.4 Material standards. Slate shingles shall comply with ASTM C 406.

R905.6.5 Application. Minimum headlap for slate shingles shall be in accordance with Table R905.6.5. Slate shingles shall be secured to the roof with two fasteners per slate. Slate shingles shall be installed in accordance with this chapter and the manufacturer's instructions.

TABLE R905.6.5
SLATE SHINGLE HEADLAP

SLOPE	HEADLAP (Inches)
4:12 ≤ slope < 8:12	4
8:12 ≤ slope < 20:12	3
Slope ≤ 20:12	2

For SI: 1 inch = 25.4 mm.

R905.6.6 Flashing. Flashing and counterflashing shall be made with sheet metal. Valley flashing shall be not less than 15 inches (381 mm) wide. Valley and flashing metal shall be a minimum uncoated thickness of 0.0179-inch (0.5 mm) zinc coated G90. Chimneys, stucco or brick walls shall have not less than two plies of felt for a cap flashing consisting of a 4-inch-wide (102 mm) strip of felt set in plastic cement and extending 1 inch (25 mm) above the first felt and a top coating of plastic cement. The felt shall extend over the base flashing 2 inches (51 mm).

R905.7 Wood shingles. The installation of wood shingles shall comply with the provisions of this section.

R905.7.1 Deck requirements. Wood shingles shall be installed on solid or spaced sheathing. Where spaced sheathing is used, sheathing boards shall be not less than 1-inch by 4-inch (25 mm by 102 mm) nominal dimensions and shall be spaced on centers equal to the weather exposure to coincide with the placement of fasteners.

R905.7.1.1 Solid sheathing required. In areas where the average daily temperature in January is 25°F (-4°C) or less, solid sheathing is required on that portion of the roof requiring the application of an ice barrier.

R905.7.2 Deck slope. Wood shingles shall be installed on slopes of three units vertical in 12 units horizontal (25-percent slope) or greater.

R905.7.3 Underlayment. Underlayment shall comply with Section R905.1.1.

R905.7.3.1 Ice barrier. Where required, ice barriers shall comply with Section R905.1.2.

R905.7.4 Material standards. Wood shingles shall be of naturally durable wood and comply with the requirements of Table R905.7.4.

TABLE R905.7.4
WOOD SHINGLE MATERIAL REQUIREMENTS

MATERIAL	MINIMUM GRADES	APPLICABLE GRADING RULES
Wood shingles of naturally durable wood	1, 2 or 3	Cedar Shake and Shingle Bureau

R905.7.5 Application. Wood shingles shall be installed in accordance with this chapter and the manufacturer's instructions. Wood shingles shall be laid with a side lap not less than $1^1/_2$ inches (38 mm) between joints in courses, and two joints shall not be in direct alignment in any three adjacent courses. Spacing between shingles shall be not less than $^1/_4$ inch to $^3/_8$ inch (6.4 mm to 9.5 mm). Weather exposure for wood shingles shall not exceed those set in Table R905.7.5(1). Fasteners for untreated (naturally durable) wood shingles shall be box nails in accordance with Table R905.7.5(2). Nails shall be stainless steel Type 304 or 316 or hot-dipped galvanized with a coating weight of ASTM A 153 Class D (1.0 oz/ft^2). Alternatively, two 16-gage stainless steel Type 304 or 316 staples with crown widths $^7/_{16}$ inch (11.1 mm) minimum, $^3/_4$ inch (19.1 mm) maximum, shall be used. Fasteners installed within 15 miles (24 km) of salt water coastal areas shall be stainless steel Type 316. Fasteners for fire-retardant-treated shingles in accordance with Section R902 or pressure-impregnated-preservative-treated shingles of naturally durable wood in accordance with AWPA U1 shall be stainless steel Type 316. All fasteners shall have a minimum penetration into the sheathing of $^3/_4$ inch (19.1 mm). For sheathing less than $^3/_4$ inch in (19.1 mm) thickness, each fastener shall penetrate through the sheathing. Wood shingles shall be attached to the roof with two fasteners per shingle, positioned in accordance with the manufacturer's installation instructions. Fastener packaging shall bear a label indicating the appropriate grade material or coating weight.

TABLE R905.7.5(1)
WOOD SHINGLE WEATHER EXPOSURE AND ROOF SLOPE

ROOFING MATERIAL	LENGTH (inches)	GRADE	EXPOSURE (inches)	
			3:12 pitch to < 4:12	4:12 pitch or steeper
Shingles of naturally durable wood	16	No. 1	$3^3/_4$	5
		No. 2	$3^1/_2$	4
		No. 3	3	$3^1/_2$
	18	No. 1	$4^1/_4$	$5^1/_2$
		No. 2	4	$4^1/_2$
		No. 3	$3^1/_2$	4
	24	No. 1	$5^3/_4$	$7^1/_2$
		No. 2	$5^1/_2$	$6^1/_2$
		No. 3	5	$5^1/_2$

For SI: 1 inch = 25.4 mm.

TABLE R905.7.5(2)
NAIL REQUIREMENTS FOR WOOD SHAKES AND WOOD SHINGLES

SHAKES	NAIL TYPE AND MINIMUM LENGTH	MINIMUM HEAD SIZE	MINIMUM SHANK DIAMETER
18″ straight-split	5d box $1^3/_4$″	0.19″	.080″
18″ and 24″ handsplit and resawn	6d box 2″	0.19″	.0915″
24″ taper-split	5d box $1^3/_4$″	0.19″	.080″
18″ and 24″ tapersawn	6d box 2″	0.19″	.0915″
Shingles	**Nail Type and Minimum Length**		
16″ and 18″	3d box $1^1/_4$″	0.19″	.080″
24″	4d box $1^1/_2$″	0.19″	.080″

R905.7.6 Valley flashing. Roof flashing shall be not less than No. 26 gage [0.019 inches (0.5 mm)] corrosion-resistant sheet metal and shall extend 10 inches (254 mm) from the centerline each way for roofs having slopes less than 12 units vertical in 12 units horizontal (100-percent slope), and 7 inches (178 mm) from the centerline each way for slopes of 12 units vertical in 12 units horizontal and greater. Sections of flashing shall have an end lap of not less than 4 inches (102 mm).

R905.7.7 Label required. Each bundle of shingles shall be identified by a *label* of an *approved* grading or inspection bureau or agency.

R905.8 Wood shakes. The installation of wood shakes shall comply with the provisions of this section.

R905.8.1 Deck requirements. Wood shakes shall be used only on solid or spaced sheathing. Where spaced sheathing is used, sheathing boards shall be not less than 1-inch by 4-inch (25 mm by 102 mm) nominal dimensions and shall be spaced on centers equal to the weather exposure to coincide with the placement of fasteners. Where 1-inch by 4-inch (25 mm by 102 mm) spaced sheathing is installed at 10 inches (254 mm) on center, additional 1-inch by 4-inch (25 mm by 102 mm) boards shall be installed between the sheathing boards.

R905.8.1.1 Solid sheathing required. In areas where the average daily temperature in January is 25°F (-4°C) or less, solid sheathing is required on that portion of the roof requiring an ice barrier.

R905.8.2 Deck slope. Wood shakes shall only be used on slopes of three units vertical in 12 units horizontal (25-percent slope) or greater.

R905.8.3 Underlayment. Underlayment shall comply with Section R905.1.1.

R905.8.3.1 Ice barrier. Where required, ice barriers shall comply with Section R905.1.2.

R905.8.4 Interlayment. Interlayment shall comply with ASTM D 226, Type I.

R905.8.5 Material standards. Wood shakes shall comply with the requirements of Table R905.8.5.

TABLE R905.8.5
WOOD SHAKE MATERIAL REQUIREMENTS

MATERIAL	MINIMUM GRADES	APPLICABLE GRADING RULES
Wood shakes of naturally durable wood	1	Cedar Shake and Shingle Bureau
Tapersawn shakes of naturally durable wood	1 or 2	Cedar Shake and Shingle Bureau
Preservative-treated shakes and shingles of naturally durable wood	1	Cedar Shake and Shingle Bureau
Fire-retardant-treated shakes and shingles of naturally durable wood	1	Cedar Shake and Shingle Bureau
Preservative-treated tapersawn shakes of Southern pine treated in accordance with AWPA Standard U1 (Commodity Specification A, Use Category 3B and Section 5.6)	1 or 2	Forest Products Laboratory of the Texas Forest Services

R905.8.6 Application. Wood shakes shall be installed in accordance with this chapter and the manufacturer's installation instructions. Wood shakes shall be laid with a side lap not less than $1^1/_2$ inches (38 mm) between joints in adjacent courses. Spacing between shakes in the same course shall be $^3/_8$ inch to $^5/_8$ inch (9.5 mm to 15.9 mm) including tapersawn shakes. Weather exposures for wood shakes shall not exceed those set in Table R905.8.6. Fasteners for untreated (naturally durable) wood shakes shall be box nails in accordance with Table R905.7.5(2). Nails shall be stainless steel Type 304, or Type 316 or hot-dipped with a coating weight of ASTM A 153 Class D (1.0 oz/ft^2). Alternatively, two 16-gage Type 304 or Type 316 stainless steel staples, with crown widths $^7/_{16}$ inch (11.1 mm) minimum, $^3/_4$ inch (19.1 mm) maximum, shall be used. Fasteners installed within 15 miles (24 km) of salt water coastal areas shall be stainless steel Type 316. Wood shakes shall be attached to the roof with two fasteners per shake positioned in accordance with the manufacturer's installation instructions Fasteners for fire-retardant-treated (as defined in Section R902) shakes or pressure-impregnated-preservative-treated shakes of naturally durable wood in accordance with AWPA U1 shall be stainless steel Type 316. All fasteners shall have a minimum penetration into the sheathing of $^3/_4$ inch (19.1 mm). Where the sheathing is less than $^3/_4$ inch (19.1 mm) thick, each fas-

TABLE R905.8.6
WOOD SHAKE WEATHER EXPOSURE AND ROOF SLOPE

ROOFING MATERIAL	LENGTH (inches)	GRADE	EXPOSURE (inches)
			4:12 pitch or steeper
Shakes of naturally durable wood	18	No. 1	$7^1/_2$
	24	No. 1	10[a]
Preservative-treated tapersawn shakes of Southern Yellow Pine	18	No. 1	$7^1/_2$
	24	No. 1	10
	18	No. 2	$5^1/_2$
	24	No. 2	$7^1/_2$
Taper-sawn shakes of naturally durable wood	18	No. 1	$7^1/_2$
	24	No. 1	10
	18	No. 2	$5^1/_2$
	24	No. 2	$7^1/_2$

For SI: 1 inch = 25.4 mm.
a. For 24-inch by $^3/_8$-inch handsplit shakes, the maximum exposure is $7^1/_2$ inches.

tener shall penetrate through the sheathing. Fastener packaging shall bear a label indicating the appropriate grade material or coating weight.

R905.8.7 Shake placement. The starter course at the eaves shall be doubled and the bottom layer shall be either 15-inch (381 mm), 18-inch (457 mm) or 24-inch (610 mm) wood shakes or wood shingles. Fifteen-inch (381 mm) or 18-inch (457 mm) wood shakes shall be permitted to be used for the final course at the ridge. Shakes shall be interlaid with 18-inch-wide (457 mm) strips of not less than No. 30 felt shingled between each course in such a manner that no felt is exposed to the weather by positioning the lower edge of each felt strip above the butt end of the shake it covers a distance equal to twice the weather exposure.

R905.8.8 Valley flashing. Roof valley flashing shall be not less than No. 26 gage [0.019 inch (0.5 mm)] corrosion-resistant sheet metal and shall extend not less than 11 inches (279 mm) from the centerline each way. Sections of flashing shall have an end lap of not less than 4 inches (102 mm).

R905.8.9 Label required. Each bundle of shakes shall be identified by a *label* of an *approved* grading or inspection bureau or agency.

R905.9 Built-up roofs. The installation of built-up roofs shall comply with the provisions of this section.

R905.9.1 Slope. Built-up roofs shall have a design slope of not less than one-fourth unit vertical in 12 units horizontal (2-percent slope) for drainage, except for coal-tar built-up roofs, which shall have a design slope of a minimum one-eighth unit vertical in 12 units horizontal (1-percent slope).

R905.9.2 Material standards. Built-up roof covering materials shall comply with the standards in Table R905.9.2 or UL 55A.

R905.9.3 Application. Built-up roofs shall be installed in accordance with this chapter and the manufacturer's instructions.

R905.10 Metal roof panels. The installation of metal roof panels shall comply with the provisions of this section.

R905.10.1 Deck requirements. Metal roof panel roof coverings shall be applied to solid or spaced sheathing, except where the roof covering is specifically designed to be applied to spaced supports.

R905.10.2 Slope. Minimum slopes for metal roof panels shall comply with the following:

1. The minimum slope for lapped, nonsoldered-seam metal roofs without applied lap sealant shall be three units vertical in 12 units horizontal (25-percent slope).
2. The minimum slope for lapped, nonsoldered-seam metal roofs with applied lap sealant shall be one-half unit vertical in 12 units horizontal (4-percent slope). Lap sealants shall be applied in accordance with the *approved* manufacturer's installation instructions.
3. The minimum slope for standing-seam roof systems shall be one-quarter unit vertical in 12 units horizontal (2-percent slope).

R905.10.3 Material standards. Metal-sheet roof covering systems that incorporate supporting structural members shall be designed in accordance with the *International Building Code*. Metal-sheet roof coverings installed over structural decking shall comply with Table R905.10.3(1). The materials used for metal-sheet roof coverings shall be naturally corrosion resistant or provided with corrosion resistance in accordance with the standards and minimum thicknesses shown in Table R905.10.3(2).

R905.10.4 Attachment. Metal roof panels shall be secured to the supports in accordance with this chapter and the manufacturer's installation instructions. In the absence of manufacturer's installation instructions, the following fasteners shall be used:

1. Galvanized fasteners shall be used for steel roofs.
2. Copper, brass, bronze, copper alloy and 300-series stainless steel fasteners shall be used for copper roofs.
3. Stainless steel fasteners are acceptable for metal roofs.

TABLE R905.9.2
BUILT-UP ROOFING MATERIAL STANDARDS

MATERIAL STANDARD	STANDARD
Acrylic coatings used in roofing	ASTM D 6083
Aggregate surfacing	ASTM D 1863
Asphalt adhesive used in roofing	ASTM D 3747
Asphalt cements used in roofing	ASTM D 2822; D 3019; D 4586
Asphalt-coated glass fiber base sheet	ASTM D 4601
Asphalt coatings used in roofing	ASTM D 1227; D 2823; D 2824; D 4479
Asphalt glass felt	ASTM D 2178
Asphalt primer used in roofing	ASTM D 41
Asphalt-saturated and asphalt-coated organic felt base sheet	ASTM D 2626
Asphalt-saturated organic felt (perforated)	ASTM D 226
Asphalt used in roofing	ASTM D 312
Coal-tar cements used in roofing	ASTM D 4022; D 5643
Coal-tar primer used in roofing, dampproofing and waterproofing	ASTM D 43
Coal-tar saturated organic felt	ASTM D 227
Coal-tar used in roofing	ASTM D 450, Type I or II
Glass mat, coal tar	ASTM D 4990
Glass mat, venting type	ASTM D 4897
Mineral-surfaced inorganic cap sheet	ASTM D 3909
Thermoplastic fabrics used in roofing	ASTM D 5665; D 5726

TABLE R905.10.3(1)
METAL ROOF COVERING STANDARDS

ROOF COVERING TYPE	STANDARD APPLICATION RATE/THICKNESS
Galvanized steel	ASTM A 653 G90 Zinc coated
Stainless steel	ASTM A 240, 300 Series alloys
Steel	ASTM A 924
Lead-coated copper	ASTM B 101
Cold-rolled copper	ASTM B 370 minimum 16 oz/sq ft and 12 oz/sq ft high-yield copper for metal-sheet roof-covering systems; 12 oz/sq ft for preformed metal shingle systems.
Hard lead	2 lb/sq ft
Soft lead	3 lb/sq ft
Aluminum	ASTM B 209, 0.024 minimum thickness for roll-formed panels and 0.019-inch minimum thickness for pressformed shingles.
Terne (tin) and terne-coated stainless	Terne coating of 40 lb per double base box, field painted where applicable in accordance with manufacturer's installation instructions.
Zinc	0.027 inch minimum thickness: 99.995% electrolytic high-grade zinc with alloy additives of copper (0.08 - 0.20%), titanium (0.07% - 0.12%) and aluminum (0.015%).

For SI: 1 ounce per square foot = 0.305 kg/m^2, 1 pound per square foot = 4.214 kg/m^2, 1 inch = 25.4 mm, 1 pound = 0.454 kg.

TABLE R905.10.3(2)
MINIMUM CORROSION RESISTANCE

55% aluminum-zinc alloy coated steel	ASTM A 792 AZ 50
5% aluminum alloy-coated steel	ASTM A 875 GF60
Aluminum-coated steel	ASTM A 463 T2 65
Galvanized steel	ASTM A 653 G-90
Prepainted steel	ASTM A 755[a]

a. Paint systems in accordance with ASTM A 755 shall be applied over steel products with corrosion-resistant coatings complying with ASTM A 792, ASTM A 875, ASTM A 463, or ASTM A 653.

R905.10.5 Underlayment. Underlayment shall comply with Section R905.1.1.

R905.11 Modified bitumen roofing. The installation of modified bitumen roofing shall comply with the provisions of this section.

R905.11.1 Slope. Modified bitumen membrane roofs shall have a design slope of not less than one-fourth unit vertical in 12 units horizontal (2-percent slope) for drainage.

R905.11.2 Material standards. Modified bitumen roof coverings shall comply with the standards in Table R905.11.2.

TABLE R905.11.2
MODIFIED BITUMEN ROOFING MATERIAL STANDARDS

MATERIAL	STANDARD
Acrylic coating	ASTM D 6083
Asphalt adhesive	ASTM D 3747
Asphalt cement	ASTM D 3019
Asphalt coating	ASTM D 1227; D 2824
Asphalt primer	ASTM D 41
Modified bitumen roof membrane	ASTM D 6162; D 6163; D 6164; D 6222; D 6223; D 6298; CGSB 37-GP-56M

R905.11.3 Application. Modified bitumen roofs shall be installed in accordance with this chapter and the manufacturer's instructions.

R905.12 Thermoset single-ply roofing. The installation of thermoset single-ply roofing shall comply with the provisions of this section.

R905.12.1 Slope. Thermoset single-ply membrane roofs shall have a design slope of not less than one-fourth unit vertical in 12 units horizontal (2-percent slope) for drainage.

R905.12.2 Material standards. Thermoset single-ply roof coverings shall comply with ASTM D 4637, ASTM D 5019 or CGSB 37-GP-52M.

R905.12.3 Application. Thermoset single-ply roofs shall be installed in accordance with this chapter and the manufacturer's instructions.

R905.13 Thermoplastic single-ply roofing. The installation of thermoplastic single-ply roofing shall comply with the provisions of this section.

R905.13.1 Slope. Thermoplastic single-ply membrane roofs shall have a design slope of not less than one-fourth unit vertical in 12 units horizontal (2-percent slope).

R905.13.2 Material standards. Thermoplastic single-ply roof coverings shall comply with ASTM D 4434, ASTM D 6754, ASTM D 6878 or CGSB CAN/CGSB 37.54.

R905.13.3 Application. Thermoplastic single-ply roofs shall be installed in accordance with this chapter and the manufacturer's instructions.

R905.14 Sprayed polyurethane foam roofing. The installation of sprayed polyurethane foam roofing shall comply with the provisions of this section.

R905.14.1 Slope. Sprayed polyurethane foam roofs shall have a design slope of not less than one-fourth unit vertical in 12 units horizontal (2-percent slope) for drainage.

R905.14.2 Material standards. Spray-applied polyurethane foam insulation shall comply with ASTM C 1029, Type III or IV or ASTM D 7425.

R905.14.3 Application. Foamed-in-place roof insulation shall be installed in accordance with this chapter and the manufacturer's instructions. A liquid-applied protective coating that complies with Table R905.14.3 shall be applied not less than 2 hours nor more than 72 hours following the application of the foam.

TABLE R905.14.3
PROTECTIVE COATING MATERIAL STANDARDS

MATERIAL	STANDARD
Acrylic coating	ASTM D 6083
Silicone coating	ASTM D 6694
Moisture-cured polyurethane coating	ASTM D 6947

R905.14.4 Foam plastics. Foam plastic materials and installation shall comply with Section R316.

R905.15 Liquid-applied roofing. The installation of liquid-applied roofing shall comply with the provisions of this section.

R905.15.1 Slope. Liquid-applied roofing shall have a design slope of not less than one-fourth unit vertical in 12 units horizontal (2-percent slope).

R905.15.2 Material standards. Liquid-applied roofing shall comply with ASTM C 836, C 957, D 1227, D 3468, D 6083, D 6694 or D 6947.

R905.15.3 Application. Liquid-applied roofing shall be installed in accordance with this chapter and the manufacturer's instructions.

R905.16 Photovoltaic shingles. The installation of photovoltaic shingles shall comply with the provisions of this section, Section R324 and NFPA 70.

R905.16.1 Deck requirements. Photovoltaic shingles shall be applied to a solid or closely-fitted deck, except where the roof covering is specifically designed to be applied over spaced sheathing.

R905.16.2 Deck slope. Photovoltaic shingles shall be used only on roof slopes of two units vertical in 12 units horizontal (2:12) or greater.

R905.16.3 Underlayment. Unless otherwise noted, required underlayment shall conform to ASTM D 4869 or ASTM D6757.

R905.16.4 Underlayment application. Underlayment shall be applied shingle fashion, parallel to and starting from the eave, lapped 2 inches (51 mm) and fastened sufficiently to hold in place.

R905.16.4.1 Ice barrier. In areas where there has been a history of ice forming along the eaves causing a backup of water, as designated in Table R301.2(1), an ice barrier that consists of not less than two layers of underlayment cemented together or of a self-adhering polymer modified bitumen sheet shall be used in lieu of normal underlayment and extend from the lowest edges of all roof surfaces to a point not less than 24 inches (610 mm) inside the exterior wall line of the building.

Exception: Detached accessory structures that contain no conditioned floor area.

R905.16.4.2 Underlayment and high winds. Underlayment applied in areas subject to high winds [above 140 mph (63 m/s), in accordance with Figure R301.2(4)A] shall be applied with corrosion-resistant fasteners in accordance with the manufacturer's installation instructions. Fasteners are to be applied along the overlap not farther apart than 36 inches (914 mm) on center.

Underlayment installed where the ultimate design wind speed equals or exceeds 150 mph (67 m/s) shall comply with ASTM D 4869 Type IV, or ASTM D 6757. The underlayment shall be attached in a grid pattern of 12 inches (305 mm) between side laps with a 6-inch (152 mm) spacing at the side laps. Underlayment shall be applied as required for asphalt shingles in accordance with Table R905.1.1(2). Underlayment shall be attached using metal or plastic cap nails with a head diameter of not less than 1 inch (25 mm) with a thickness of not less than 32-gage sheet metal. The cap-nail shank shall be not less than 12 gage (0.105 inches) with a length to penetrate through the roof sheathing or not less than $^3/_4$ inch (19 mm) into the roof sheathing.

Exception: As an alternative, adhered underlayment complying with ASTM D 1970 shall be permitted.

R905.16.5 Material standards. Photovoltaic shingles shall be listed and labeled in accordance with UL 1703.

R905.16.6 Attachment. Photovoltaic shingles shall be attached in accordance with the manufacturer's installation instructions.

R905.16.7 Wind resistance. Photovoltaic shingles shall be tested in accordance with procedures and acceptance criteria in ASTM D 3161. Photovoltaic shingles shall comply with the classification requirements of Table R905.2.4.1 for the appropriate maximum basic wind speed. Photovoltaic shingle packaging shall bear a label to indicate compliance with the procedures in ASTM D 3161 and the required classification from Table R905.2.4.1.

SECTION R906
ROOF INSULATION

R906.1 General. The use of above-deck thermal insulation shall be permitted provided such insulation is covered with an *approved* roof covering and complies with FM 4450 or UL 1256.

R906.2 Material standards. Above-deck thermal insulation board shall comply with the standards in Table R906.2.

TABLE R906.2
MATERIAL STANDARDS FOR ROOF INSULATION

Cellular glass board	ASTM C 552
Composite boards	ASTM C 1289, Type III, IV, V or VI
Expanded polystyrene	ASTM C 578
Extruded polystyrene board	ASTM C 578
Perlite board	ASTM C 728
Polyisocyanurate board	ASTM C 1289, Type I or II
Wood fiberboard	ASTM C 208
Fiber-reinforced gypsum board	ASTM C 1278
Glass-faced gypsum board	ASTM C 1177

SECTION R907
ROOFTOP-MOUNTED PHOTOVOLTAIC SYSTEMS

R907.1 Rooftop-mounted photovoltaic systems. Rooftop-mounted photovoltaic panels or modules shall be installed in accordance with this section, Section R324 and NFPA 70.

R907.2 Wind resistance. Rooftop-mounted photovoltaic panel or modules systems shall be installed to resist the component and cladding loads specified in Table R301.2(2), adjusted for height and exposure in accordance with Table R301.2(3).

R907.3 Fire classification. Rooftop-mounted photovoltaic panels or modules shall have the same fire classification as the roof assembly required in Section R902.

R907.4 Installation. Rooftop-mounted photovoltaic panels or modules shall be installed in accordance with the manufacturer's instructions.

R907.5 Photovoltaic panels and modules. Rooftop-mounted photovoltaic panels and modules shall be listed and labeled in accordance with UL 1703 and shall be installed in accordance with the manufacturer's printed instructions.

SECTION R908
REROOFING

R908.1 General. Materials and methods of application used for re-covering or replacing an existing roof covering shall comply with the requirements of Chapter 9.

Exceptions:

1. Reroofing shall not be required to meet the minimum design slope requirement of one-quarter unit vertical in 12 units horizontal (2-percent slope) in Section R905 for roofs that provide positive roof drainage.
2. For roofs that provide positive drainage, re-covering or replacing an existing roof covering shall not require the secondary (emergency overflow) drains or scuppers of Section R903.4.1 to be added to an existing roof.

R908.2 Structural and construction loads. The structural roof components shall be capable of supporting the roof covering system and the material and equipment loads that will be encountered during installation of the roof covering system.

R908.3 Roof replacement. Roof replacement shall include the removal of existing layers of roof coverings down to the roof deck.

Exception: Where the existing roof assembly includes an ice barrier membrane that is adhered to the roof deck, the existing ice barrier membrane shall be permitted to remain in place and covered with an additional layer of ice barrier membrane in accordance with Section R905.

R908.3.1 Roof re-cover. The installation of a new roof covering over an existing roof covering shall be permitted where any of the following conditions occur:

1. Where the new roof covering is installed in accordance with the roof covering manufacturer's approved instructions
2. Complete and separate roofing systems, such as standing-seam metal roof systems, that are designed to transmit the roof loads directly to the building's structural system and do not rely on existing roofs and roof coverings for support, shall not require the removal of existing roof coverings.
3. Metal panel, metal shingle and concrete and clay tile roof coverings shall be permitted to be installed over existing wood shake roofs where applied in accordance with Section R908.4.
4. The application of a new protective coating over an existing spray polyurethane foam roofing system shall be permitted without tear-off of existing roof coverings.

R908.3.1.1 A *roof re-cover* shall not be permitted where any of the following conditions occur:

1. Where the existing roof or roof covering is water soaked or has deteriorated to the point that the existing roof or roof covering is not adequate as a base for additional roofing.
2. Where the existing roof covering is slate, clay, cement or asbestos-cement tile.
3. Where the existing roof has two or more applications of any type of roof covering.

R908.4 Roof re-covering. Where the application of a new roof covering over wood shingle or shake roofs creates a combustible concealed space, the entire existing surface shall be covered with gypsum board, mineral fiber, glass fiber or other *approved* materials securely fastened in place.

R908.5 Reinstallation of materials. Existing slate, clay or cement tile shall be permitted for reinstallation, except that damaged, cracked or broken slate or tile shall not be reinstalled. Any existing flashings, edgings, outlets, vents or similar devices that are a part of the assembly shall be replaced where rusted, damaged or deteriorated. Aggregate surfacing materials shall not be reinstalled.

R908.6 Flashings. Flashings shall be reconstructed in accordance with *approved* manufacturer's installation instructions. Metal flashing to which bituminous materials are to be adhered shall be primed prior to installation.

SECTION R909
ROOFTOP-MOUNTED PHOTOVOLTAIC PANEL SYSTEMS

R909.1 General. The installation of photovoltaic panel systems that are mounted on or above the roof covering shall comply with this section, Section R324 and NFPA 70.

R909.2 Structural requirements. Rooftop-mounted photovoltaic panel systems shall be designed to structurally support the system and withstand applicable gravity loads in accordance with Chapter 3. The roof upon which these systems are installed shall be designed and constructed to support the loads imposed by such systems in accordance with Chapter 8.

R909.3 Installation. Rooftop-mounted photovoltaic systems shall be installed in accordance with the manufacturer's instructions. Roof penetrations shall be flashed and sealed in accordance with this chapter.

CHAPTER 10

CHIMNEYS AND FIREPLACES

SECTION R1001
MASONRY FIREPLACES

R1001.1 General. Masonry fireplaces shall be constructed in accordance with this section and the applicable provisions of Chapters 3 and 4.

R1001.2 Footings and foundations. Footings for masonry fireplaces and their chimneys shall be constructed of concrete or *solid masonry* not less than 12 inches (305 mm) thick and shall extend not less than 6 inches (152 mm) beyond the face of the fireplace or foundation wall on all sides. Footings shall be founded on natural, undisturbed earth or engineered fill below frost depth. In areas not subjected to freezing, footings shall be not less than 12 inches (305 mm) below finished *grade*.

R1001.2.1 Ash dump cleanout. Cleanout openings located within foundation walls below fireboxes, when provided, shall be equipped with ferrous metal or masonry doors and frames constructed to remain tightly closed except when in use. Cleanouts shall be accessible and located so that ash removal will not create a hazard to combustible materials.

R1001.3 Seismic reinforcing. Masonry or concrete chimneys in Seismic Design Category D_0, D_1 or D_2 shall be reinforced. Reinforcing shall conform to the requirements set forth in Table R1001.1 and Section R606.

R1001.3.1 Vertical reinforcing. For chimneys up to 40 inches (1016 mm) wide, four No. 4 continuous vertical bars shall be placed between wythes of *solid masonry* or within the cells of hollow unit masonry and grouted in accordance with Section R606. Grout shall be prevented from bonding with the flue liner so that the flue liner is free to move with thermal expansion. For chimneys more than 40 inches (1016 mm) wide, two additional No. 4 vertical bars shall be provided for each additional flue incorporated into the chimney or for each additional 40 inches (1016 mm) in width or fraction thereof.

R1001.3.2 Horizontal reinforcing. Vertical reinforcement shall be placed within $^1/_4$-inch (6.4 mm) ties, or other reinforcing of equivalent net cross-sectional area, placed in the bed joints in accordance with Section R606 at not less than every 18 inches (457 mm) of vertical height. Two such ties shall be installed at each bend in the vertical bars.

R1001.4 Seismic anchorage. Masonry or concrete chimneys in Seismic Design Category D_0, D_1 or D_2 shall be anchored at each floor, ceiling or roof line more than 6 feet (1829 mm) above *grade*, except where constructed completely within the exterior walls. Anchorage shall conform to the requirements of Section R1001.4.1.

R1001.4.1 Anchorage. Two $^3/_{16}$-inch by 1-inch (5 mm by 25 mm) straps shall be embedded not less than 12 inches (305 mm) into the chimney. Straps shall be hooked around the outer bars and extend 6 inches (152 mm) beyond the bend. Each strap shall be fastened to not less than four floor ceiling or floor joists or rafters with two $^1/_2$-inch (12.7 mm) bolts.

R1001.4.1.1 Cold-formed steel framing. Where cold-formed steel framing is used, the location where the $^1/_2$-inch (12.7 mm) bolts are used to attach the straps to the framing shall be reinforced with not less than a 3-inch × 3-inch × 0.229-inch (76 mm × 76 mm × 5.8 mm) steel plate on top of the strap that is screwed to the framing with not fewer than seven No. 6 screws for each bolt.

R1001.5 Firebox walls. Masonry fireboxes shall be constructed of *solid masonry* units, hollow masonry units grouted solid, stone or concrete. Where a lining of firebrick not less than 2 inches (51 mm) thick or other *approved* lining is provided, the minimum thickness of back and sidewalls shall each be 8 inches (203 mm) of *solid masonry*, including the lining. The width of joints between firebricks shall not be greater than $^1/_4$ inch (6.4 mm). Where a lining is not provided, the total minimum thickness of back and side walls shall be 10 inches (254 mm) of *solid masonry*. Firebrick shall conform to ASTM C 27 or C 1261 and shall be laid with medium duty refractory mortar conforming to ASTM C 199.

R1001.5.1 Steel fireplace units. Installation of steel fireplace units with *solid masonry* to form a masonry fireplace is permitted when installed either in accordance with the requirements of their listing or the requirements of this section. Steel fireplace units incorporating a steel firebox lining shall be constructed with steel not less than $^1/_4$ inch (6.4 mm) thick, and an air-circulating chamber that is ducted to the interior of the building. The firebox lining shall be encased with *solid masonry* to provide a total thickness at the back and sides of not less than 8 inches (203 mm), of which not less than 4 inches (102 mm) shall be of *solid masonry* or concrete. Circulating air ducts used with steel fireplace units shall be constructed of metal or masonry.

R1001.6 Firebox dimensions. The firebox of a concrete or masonry fireplace shall have a minimum depth of 20 inches (508 mm). The throat shall not be less than 8 inches (203 mm) above the fireplace opening. The throat opening shall not be less than 4 inches (102 mm) deep. The cross-sectional area of the passageway above the firebox, including the throat, damper and smoke chamber, shall not be less than the cross-sectional area of the flue.

Exception: Rumford fireplaces shall be permitted provided that the depth of the fireplace is not less than 12 inches (305 mm) and not less than one-third of the width of the fireplace opening, that the throat is not less than 12 inches (305 mm) above the lintel and is not less than $^1/_{20}$ the cross-sectional area of the fireplace opening.

TABLE R1001.1
SUMMARY OF REQUIREMENTS FOR MASONRY FIREPLACES AND CHIMNEYS

ITEM	LETTER[a]	REQUIREMENTS
Hearth slab thickness	A	4″
Hearth extension (each side of opening)	B	8″ fireplace opening < 6 square foot. 12″ fireplace opening ≥ 6 square foot.
Hearth extension (front of opening)	C	16″ fireplace opening < 6 square foot. 20″ fireplace opening ≥ 6 square foot.
Hearth slab reinforcing	D	Reinforced to carry its own weight and all imposed loads.
Thickness of wall of firebox	E	10″ solid brick or 8″ where a firebrick lining is used. Joints in firebrick $^1/_4$″ maximum.
Distance from top of opening to throat	F	8″
Smoke chamber wall thickness Unlined walls	G	6″ 8″
Chimney Vertical reinforcing[b]	H	Four No. 4 full-length bars for chimney up to 40″ wide. Add two No. 4 bars for each additional 40″ or fraction of width or each additional flue.
Horizontal reinforcing	J	$^1/_4$″ ties at 18″ and two ties at each bend in vertical steel.
Bond beams	K	No specified requirements.
Fireplace lintel	L	Noncombustible material.
Chimney walls with flue lining	M	Solid masonry units or hollow masonry units grouted solid with not less than 4-inch nominal thickness.
Distances between adjacent flues	—	See Section R1003.13.
Effective flue area (based on area of fireplace opening)	P	See Section R1003.15.
Clearances Combustible material Mantel and trim Above roof	R	 See Sections R1001.11 and R1003.18. See Section R1001.11, Exception 4. 3′ at roofline and 2′ at 10′.
Anchorage[b] Strap Number Embedment into chimney Fasten to Bolts	S	 $^3/_{16}$″ × 1″ Two 12″ hooked around outer bar with 6″ extension. 4 joists Two $^1/_2$″ diameter.
Footing Thickness Width	T	 12″ min. 6″ each side of fireplace wall.

For SI: 1 inch = 25.4 mm, 1 foot = 304.8 mm, 1 square foot = 0.0929 m^2.

Note: This table provides a summary of major requirements for the construction of masonry chimneys and fireplaces. Letter references are to Figure R1001.1, which shows examples of typical construction. This table does not cover all requirements, nor does it cover all aspects of the indicated requirements. For the actual mandatory requirements of the code, see the indicated section of text.

a. The letters refer to Figure R1001.1.

b. Not required in Seismic Design Category A, B or C.

R1001.7 Lintel and throat. Masonry over a fireplace opening shall be supported by a lintel of noncombustible material. The minimum required bearing length on each end of the fireplace opening shall be 4 inches (102 mm). The fireplace throat or damper shall be located not less than 8 inches (203 mm) above the lintel.

R1001.7.1 Damper. Masonry fireplaces shall be equipped with a ferrous metal damper located not less than 8 inches (203 mm) above the top of the fireplace opening. Dampers shall be installed in the fireplace or the chimney venting the fireplace, and shall be operable from the room containing the fireplace.

R1001.8 Smoke chamber. Smoke chamber walls shall be constructed of *solid masonry* units, hollow masonry units grouted solid, stone or concrete. The total minimum thickness of front, back and side walls shall be 8 inches (203 mm) of *solid masonry*. The inside surface shall be parged smooth with refractory mortar conforming to ASTM C 199. Where a lining of firebrick not less than 2 inches (51 mm) thick, or a lining of vitrified clay not less than $^5/_8$ inch (16 mm) thick, is provided, the total minimum thickness of front, back and side walls shall be 6 inches (152 mm) of *solid masonry*, including the lining. Firebrick shall conform to ASTM C 1261 and shall be laid with medium duty refractory mortar conforming to ASTM C 199. Vitrified clay linings shall conform to ASTM C 315.

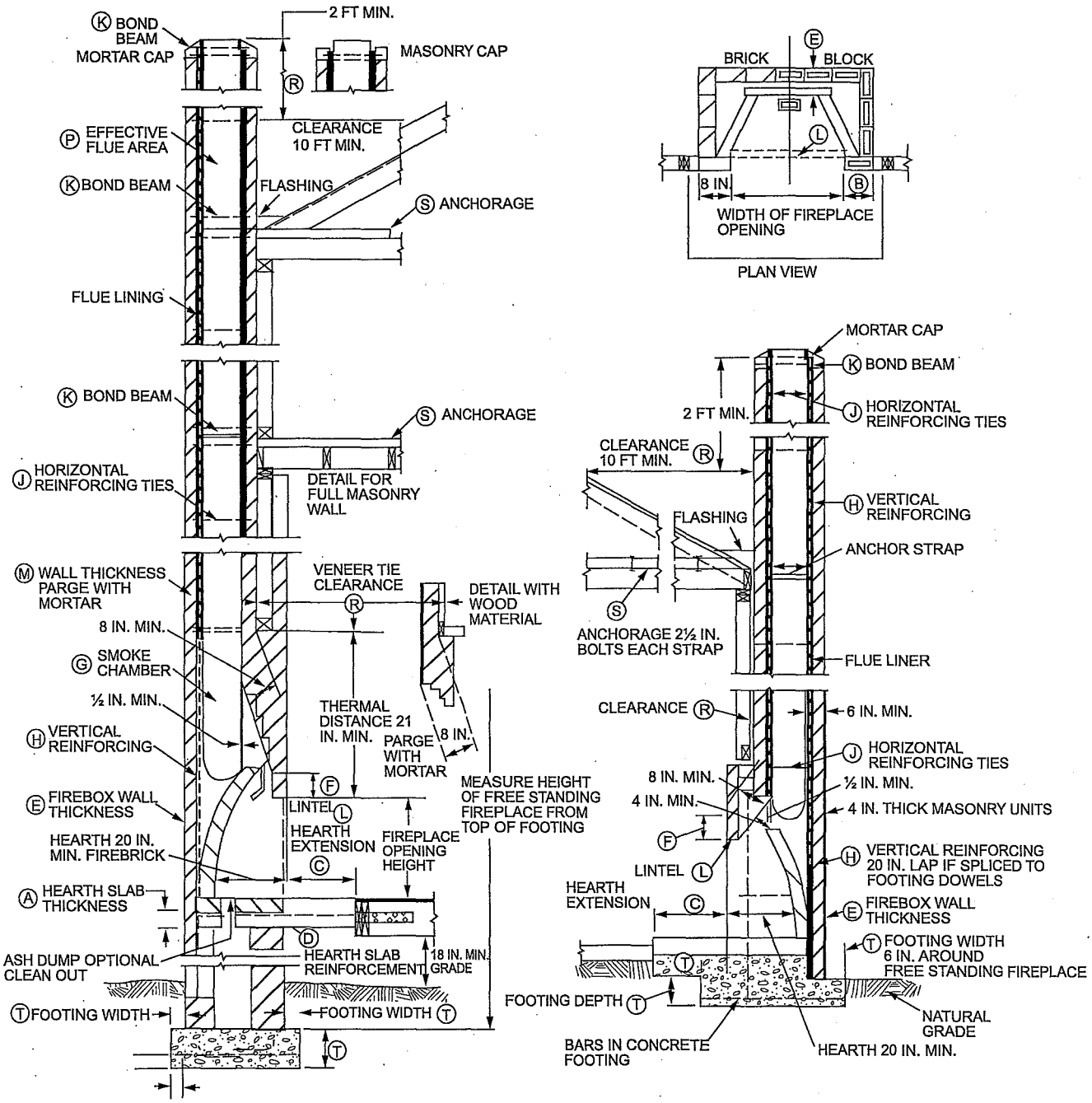

For SI: 1 inch = 25.4 mm, 1 foot = 304.8 mm.

FIGURE R1001.1
FIREPLACE AND CHIMNEY DETAILS

R1001.8.1 Smoke chamber dimensions. The inside height of the smoke chamber from the fireplace throat to the beginning of the flue shall not be greater than the inside width of the fireplace opening. The inside surface of the smoke chamber shall not be inclined more than 45 degrees (0.79 rad) from vertical where prefabricated smoke chamber linings are used or where the smoke chamber walls are rolled or sloped rather than corbeled. Where the inside surface of the smoke chamber is formed by corbeled masonry, the walls shall not be corbeled more than 30 degrees (0.52 rad) from vertical.

R1001.9 Hearth and hearth extension. Masonry fireplace hearths and hearth extensions shall be constructed of concrete or masonry, supported by noncombustible materials, and reinforced to carry their own weight and all imposed loads. Combustible material shall not remain against the underside of hearths and hearth extensions after construction.

R1001.9.1 Hearth thickness. The minimum thickness of fireplace hearths shall be 4 inches (102 mm).

R1001.9.2 Hearth extension thickness. The minimum thickness of hearth extensions shall be 2 inches (51 mm).

Exception: Where the bottom of the firebox opening is raised not less than 8 inches (203 mm) above the top of the hearth extension, a hearth extension of not less than $^3/_8$-inch-thick (10 mm) brick, concrete, stone, tile or other *approved* noncombustible material is permitted.

R1001.10 Hearth extension dimensions. Hearth extensions shall extend not less than 16 inches (406 mm) in front of and not less than 8 inches (203 mm) beyond each side of the fireplace opening. Where the fireplace opening is 6 square feet (0.6 m^2) or larger, the hearth extension shall extend not less than 20 inches (508 mm) in front of and not less than 12 inches (305 mm) beyond each side of the fireplace opening.

R1001.11 Fireplace clearance. Wood beams, joists, studs and other combustible material shall have a clearance of not less than 2 inches (51 mm) from the front faces and sides of masonry fireplaces and not less than 4 inches (102 mm) from the back faces of masonry fireplaces. The airspace shall not be filled, except to provide fireblocking in accordance with Section R1001.12.

Exceptions:

1. Masonry fireplaces *listed* and *labeled* for use in contact with combustibles in accordance with UL 127 and installed in accordance with the manufacturer's instructions are permitted to have combustible material in contact with their exterior surfaces.
2. Where masonry fireplaces are part of masonry or concrete walls, combustible materials shall not be in contact with the masonry or concrete walls less than 12 inches (306 mm) from the inside surface of the nearest firebox lining.
3. Exposed combustible trim and the edges of sheathing materials such as wood siding, flooring and gypsum board shall be permitted to abut the masonry fireplace sidewalls and hearth extension in accordance with Figure R1001.11, provided such combustible trim or sheathing is not less than 12 inches (305 mm) from the inside surface of the nearest firebox lining.
4. Exposed combustible mantels or trim may be placed directly on the masonry fireplace front surrounding the fireplace opening providing such combustible materials are not placed within 6 inches (152 mm) of a fireplace opening. Combustible material within 12 inches (306 mm) of the fireplace opening shall not project more than $^1/_8$ inch (3 mm) for each 1-inch (25 mm) distance from such an opening.

R1001.12 Fireplace fireblocking. Fireplace fireblocking shall comply with the provisions of Section R602.8.

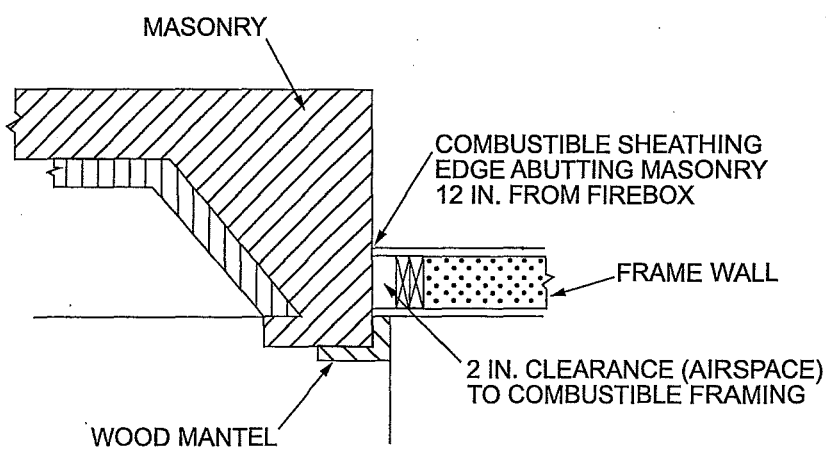

For SI: 1 inch = 25.4 mm.

FIGURE R1001.11
CLEARANCE FROM COMBUSTIBLES

SECTION R1002
MASONRY HEATERS

R1002.1 Definition. A masonry heater is a heating *appliance* constructed of concrete or *solid masonry*, hereinafter referred to as masonry, that is designed to absorb and store heat from a solid-fuel fire built in the firebox by routing the exhaust gases through internal heat exchange channels in which the flow path downstream of the firebox includes flow in a horizontal or downward direction before entering the chimney and that delivers heat by radiation from the masonry surface of the heater.

R1002.2 Installation. Masonry heaters shall be installed in accordance with this section and comply with one of the following:

1. Masonry heaters shall comply with the requirements of ASTM E 1602.
2. Masonry heaters shall be *listed* and *labeled* in accordance with UL 1482 or CEN 15250 and installed in accordance with the manufacturer's instructions.

R1002.3 Footings and foundation. The firebox floor of a masonry heater shall be a minimum thickness of 4 inches (102 mm) of noncombustible material and be supported on a noncombustible footing and foundation in accordance with Section R1003.2.

R1002.4 Seismic reinforcing. In Seismic Design Categories D_0, D_1 and D_2, masonry heaters shall be anchored to the masonry foundation in accordance with Section R1003.3. Seismic reinforcing shall not be required within the body of a masonry heater whose height is equal to or less than 3.5 times its body width and where the masonry chimney serving the heater is not supported by the body of the heater. Where the masonry chimney shares a common wall with the facing of the masonry heater, the chimney portion of the structure shall be reinforced in accordance with Section R1003.

R1002.5 Masonry heater clearance. Combustible materials shall not be placed within 36 inches (914 mm) of the outside surface of a masonry heater in accordance with NFPA 211 Section 8-7 (clearances for solid-fuel-burning *appliances*), and the required space between the heater and combustible material shall be fully vented to permit the free flow of air around all heater surfaces.

Exceptions:

1. Where the masonry heater wall is not less than 8 inches (203 mm) thick of *solid masonry* and the wall of the heat exchange channels is not less than 5 inches (127 mm) thick of *solid masonry*, combustible materials shall not be placed within 4 inches (102 mm) of the outside surface of a masonry heater. A clearance of not less than 8 inches (203 mm) shall be provided between the gas-tight capping slab of the heater and a combustible ceiling.
2. Masonry heaters listed and labeled in accordance with UL 1482 or CEN 15250 shall be installed in accordance with the listing specifications and the manufacturer's written instructions.

SECTION R1003
MASONRY CHIMNEYS

R1003.1 Definition. A masonry chimney is a chimney constructed of *solid masonry* units, hollow masonry units grouted solid, stone or concrete, hereinafter referred to as masonry. Masonry chimneys shall be constructed, anchored, supported and reinforced as required in this chapter.

R1003.2 Footings and foundations. Footings for masonry chimneys shall be constructed of concrete or *solid masonry* not less than 12 inches (305 mm) thick and shall extend not less than 6 inches (152 mm) beyond the face of the foundation or support wall on all sides. Footings shall be founded on natural undisturbed earth or engineered fill below frost depth. In areas not subjected to freezing, footings shall be not less than 12 inches (305 mm) below finished *grade*.

R1003.3 Seismic reinforcing. Masonry or concrete chimneys shall be constructed, anchored, supported and reinforced as required in this chapter. In Seismic Design Category D_0, D_1 or D_2 masonry and concrete chimneys shall be reinforced and anchored as detailed in Sections R1003.3.1, R1003.3.2 and R1003.4. In Seismic Design Category A, B or C, reinforcement and seismic anchorage are not required.

R1003.3.1 Vertical reinforcing. For chimneys up to 40 inches (1016 mm) wide, four No. 4 continuous vertical bars, anchored in the foundation, shall be placed in the concrete, or between wythes of *solid masonry*, or within the cells of hollow unit masonry, and grouted in accordance with Section R609.1.1. Grout shall be prevented from bonding with the flue liner so that the flue liner is free to move with thermal expansion. For chimneys more than 40 inches (1016 mm) wide, two additional No. 4 vertical bars shall be installed for each additional 40 inches (1016 mm) in width or fraction thereof.

R1003.3.2 Horizontal reinforcing. Vertical reinforcement shall be placed enclosed within $^1/_4$-inch (6.4 mm) ties, or other reinforcing of equivalent net cross-sectional area, spaced not to exceed 18 inches (457 mm) on center in concrete, or placed in the bed joints of unit masonry, at not less than every 18 inches (457 mm) of vertical height. Two such ties shall be installed at each bend in the vertical bars.

R1003.4 Seismic anchorage. Masonry and concrete chimneys and foundations in Seismic Design Category D_0, D_1 or D_2 shall be anchored at each floor, ceiling or roof line more than 6 feet (1829 mm) above *grade*, except where constructed completely within the exterior walls. Anchorage shall conform to the requirements in Section R1003.4.1.

R1003.4.1 Anchorage. Two $^3/_{16}$-inch by 1-inch (5 mm by 25 mm) straps shall be embedded not less than 12 inches (305 mm) into the chimney. Straps shall be hooked around the outer bars and extend 6 inches (152 mm) beyond the bend. Each strap shall be fastened to not less than four floor joists with two $^1/_2$-inch (12.7 mm) bolts.

R1003.4.1.1 Cold-formed steel framing. Where cold-formed steel framing is used, the location where the $^1/_2$-inch (12.7 mm) bolts are used to attach the straps to the framing shall be reinforced with not less than a 3-inch × 3-inch × 0.229-inch (76 mm × 76 mm × 5.8 mm) steel

plate on top of a strap that is screwed to the framing with not fewer than seven No. 6 screws for each bolt.

R1003.5 Corbeling. Masonry chimneys shall not be corbeled more than one-half of the chimney's wall thickness from a wall or foundation, nor shall a chimney be corbeled from a wall or foundation that is less than 12 inches (305 mm) thick unless it projects equally on each side of the wall, except that on the second *story* of a two-story *dwelling*, corbeling of chimneys on the exterior of the enclosing walls may equal the wall thickness. The projection of a single course shall not exceed one-half the unit height or one-third of the unit bed depth, whichever is less.

R1003.6 Changes in dimension. The chimney wall or chimney flue lining shall not change in size or shape within 6 inches (152 mm) above or below where the chimney passes through floor components, ceiling components or roof components.

R1003.7 Offsets. Where a masonry chimney is constructed with a fireclay flue liner surrounded by one wythe of masonry, the maximum offset shall be such that the centerline of the flue above the offset does not extend beyond the center of the chimney wall below the offset. Where the chimney offset is supported by masonry below the offset in an *approved* manner, the maximum offset limitations shall not apply. Each individual corbeled masonry course of the offset shall not exceed the projection limitations specified in Section R1003.5.

R1003.8 Additional load. Chimneys shall not support loads other than their own weight unless they are designed and constructed to support the additional load. Construction of masonry chimneys as part of the masonry walls or reinforced concrete walls of the building shall be permitted.

R1003.9 Termination. Chimneys shall extend not less than 2 feet (610 mm) higher than any portion of a building within 10 feet (3048 mm), but shall be not less than 3 feet (914 mm) above the highest point where the chimney passes through the roof.

R1003.9.1 Chimney caps. Masonry chimneys shall have a concrete, metal or stone cap, a drip edge and a caulked bond break around any flue liners in accordance with ASTM C 1283. The concrete, metal or stone cap shall be sloped to shed water.

R1003.9.2 Spark arrestors. Where a spark arrestor is installed on a masonry chimney, the spark arrestor shall meet all of the following requirements:

1. The net free area of the arrestor shall be not less than four times the net free area of the outlet of the chimney flue it serves.
2. The arrestor screen shall have heat and corrosion resistance equivalent to 19-gage galvanized steel or 24-gage stainless steel.
3. Openings shall not permit the passage of spheres having a diameter greater than $^1/_2$ inch (12.7 mm) nor block the passage of spheres having a diameter less than $^3/_8$ inch (9.5 mm).
4. The spark arrestor shall be accessible for cleaning and the screen or chimney cap shall be removable to allow for cleaning of the chimney flue.

R1003.9.3 Rain caps. Where a masonry or metal rain cap is installed on a masonry chimney, the net free area under the cap shall be not less than four times the net free area of the outlet of the chimney flue it serves.

R1003.10 Wall thickness. Masonry chimney walls shall be constructed of *solid masonry* units or hollow masonry units grouted solid with not less than a 4-inch (102 mm) nominal thickness.

R1003.10.1 Masonry veneer chimneys. Where masonry is used to veneer a frame chimney, through-flashing and weep holes shall be installed as required by Section R703.

R1003.11 Flue lining (material). Masonry chimneys shall be lined. The lining material shall be appropriate for the type of *appliance* connected, in accordance with the terms of the *appliance* listing and manufacturer's instructions.

R1003.11.1 Residential-type appliances (general). Flue lining systems shall comply with one of the following:

1. Clay flue lining complying with the requirements of ASTM C 315.
2. Listed and labeled chimney lining systems complying with UL 1777.
3. Factory-built chimneys or chimney units listed for installation within masonry chimneys.
4. Other *approved* materials that will resist corrosion, erosion, softening or cracking from flue gases and condensate at temperatures up to 1,800°F (982°C).

R1003.11.2 Flue linings for specific appliances. Flue linings other than these covered in Section R1003.11.1, intended for use with specific types of *appliances*, shall comply with Sections R1003.11.3 through R1003.11.6.

R1003.11.3 Gas appliances. Flue lining systems for gas *appliances* shall be in accordance with Chapter 24.

R1003.11.4 Pellet fuel-burning appliances. Flue lining and vent systems for use in masonry chimneys with pellet fuel-burning *appliances* shall be limited to the following:

1. Flue lining systems complying with Section R1003.11.1.
2. Pellet vents listed for installation within masonry chimneys (see Section R1003.11.6 for marking).

R1003.11.5 Oil-fired appliances approved for use with Type L vent. Flue lining and vent systems for use in masonry chimneys with oil-fired *appliances approved* for use with Type L vent shall be limited to the following:

1. Flue lining systems complying with Section R1003.11.1.
2. Listed chimney liners complying with UL 641 (see Section R1003.11.6 for marking).

R1003.11.6 Notice of usage. When a flue is relined with a material not complying with Section R1003.11.1, the chimney shall be plainly and permanently identified by a *label* attached to a wall, ceiling or other conspicuous location adjacent to where the connector enters the chimney. The *label* shall include the following message or equivalent language:

THIS CHIMNEY FLUE IS FOR USE ONLY WITH [TYPE OR CATEGORY OF *APPLIANCE*] *APPLIANCES*

THAT BURN [TYPE OF FUEL]. DO NOT CONNECT OTHER TYPES OF *APPLIANCES*.

R1003.12 Clay flue lining (installation). Clay flue liners shall be installed in accordance with ASTM C 1283 and extend from a point not less than 8 inches (203 mm) below the lowest inlet or, in the case of fireplaces, from the top of the smoke chamber to a point above the enclosing walls. The lining shall be carried up vertically, with a maximum slope not greater than 30 degrees (0.52 rad) from the vertical.

Clay flue liners shall be laid in medium-duty water insoluble refractory mortar conforming to ASTM C 199 with tight mortar joints left smooth on the inside and installed to maintain an airspace or insulation not to exceed the thickness of the flue liner separating the flue liners from the interior face of the chimney masonry walls. Flue liners shall be supported on all sides. Only enough mortar shall be placed to make the joint and hold the liners in position.

R1003.12.1 Listed materials. *Listed* materials used as flue linings shall be installed in accordance with the terms of their listings and manufacturer's instructions.

R1003.12.2 Space around lining. The space surrounding a chimney lining system or vent installed within a masonry chimney shall not be used to vent any other *appliance*.

Exception: This shall not prevent the installation of a separate flue lining in accordance with the manufacturer's instructions.

R1003.13 Multiple flues. Where two or more flues are located in the same chimney, masonry wythes shall be built between adjacent flue linings. The masonry wythes shall be not less than 4 inches (102 mm) thick and bonded into the walls of the chimney.

Exception: Where venting only one *appliance*, two flues shall be permitted to adjoin each other in the same chimney with only the flue lining separation between them. The joints of the adjacent flue linings shall be staggered not less than 4 inches (102 mm).

R1003.14 Flue area (appliance). Chimney flues shall not be smaller in area than that of the area of the connector from the *appliance* [see Tables R1003.14(1) and R1003.14(2)]. The sizing of a chimney flue to which multiple *appliance* venting systems are connected shall be in accordance with Section M1805.3.

R1003.15 Flue area (masonry fireplace). Flue sizing for chimneys serving fireplaces shall be in accordance with Section R1003.15.1 or R1003.15.2.

R1003.15.1 Option 1. Round chimney flues shall have a minimum net cross-sectional area of not less than $^1/_{12}$ of the fireplace opening. Square chimney flues shall have a minimum net cross-sectional area of $^1/_{10}$ of the fireplace opening. Rectangular chimney flues with an *aspect ratio* less than 2 to 1 shall have a minimum net cross-sectional area of $^1/_{10}$ of the fireplace opening. Rectangular chimney flues with an *aspect ratio* of 2 to 1 or more shall have a minimum net cross-sectional area of $^1/_8$ of the fireplace opening. Cross-sectional areas of clay flue linings are shown in Tables R1003.14(1) and R1003.14(2) or as provided by the manufacturer or as measured in the field.

R1003.15.2 Option 2. The minimum net cross-sectional area of the chimney flue shall be determined in accordance with Figure R1003.15.2. A flue size providing not less than the equivalent net cross-sectional area shall be used. Cross-sectional areas of clay flue linings are shown in Tables R1003.14(1) and R1003.14(2) or as provided by the manufacturer or as measured in the field. The height of the chimney shall be measured from the firebox floor to the top of the chimney flue.

TABLE R1003.14(1)
NET CROSS-SECTIONAL AREA OF ROUND FLUE SIZES[a]

FLUE SIZE, INSIDE DIAMETER (inches)	CROSS-SECTIONAL AREA (square inches)
6	28
7	38
8	50
10	78
$10^3/_4$	90
12	113
15	176
18	254

For SI: 1 inch = 25.4 mm, 1 square inch = 645.16 mm^2.
a. Flue sizes are based on ASTM C 315.

TABLE R1003.14(2)
NET CROSS-SECTIONAL AREA OF SQUARE AND RECTANGULAR FLUE SIZES

FLUE SIZE, OUTSIDE NOMINAL DIMENSIONS (inches)	CROSS-SECTIONAL AREA (square inches)
4.5 × 8.5	23
4.5 × 13	34
8 × 8	42
8.5 × 8.5	49
8 × 12	67
8.5 × 13	76
12 × 12	102
8.5 × 18	101
13 × 13	127
12 × 16	131
13 × 18	173
16 × 16	181
16 × 20	222
18 × 18	233
20 × 20	298
20 × 24	335
24 × 24	431

For SI: 1 inch = 25.4 mm, 1 square inch = 645.16 mm^2.

R1003.16 Inlet. Inlets to masonry chimneys shall enter from the side. Inlets shall have a thimble of fireclay, rigid refractory material or metal that will prevent the connector from pulling out of the inlet or from extending beyond the wall of the liner.

R1003.17 Masonry chimney cleanout openings. Cleanout openings shall be provided within 6 inches (152 mm) of the base of each flue within every masonry chimney. The upper edge of the cleanout shall be located not less than 6 inches (152 mm) below the lowest chimney inlet opening. The height of the opening shall be not less than 6 inches (152 mm). The cleanout shall be provided with a noncombustible cover.

Exception: Chimney flues serving masonry fireplaces where cleaning is possible through the fireplace opening.

R1003.18 Chimney clearances. Any portion of a masonry chimney located in the interior of the building or within the exterior wall of the building shall have a minimum airspace clearance to combustibles of 2 inches (51 mm). Chimneys located entirely outside the exterior walls of the building, including chimneys that pass through the soffit or cornice, shall have a minimum airspace clearance of 1 inch (25 mm). The airspace shall not be filled, except to provide fire blocking in accordance with Section R1003.19.

Exceptions:

1. Masonry chimneys equipped with a chimney lining system listed and *labeled* for use in chimneys in contact with combustibles in accordance with UL 1777 and installed in accordance with the manufacturer's instructions are permitted to have combustible material in contact with their exterior surfaces.

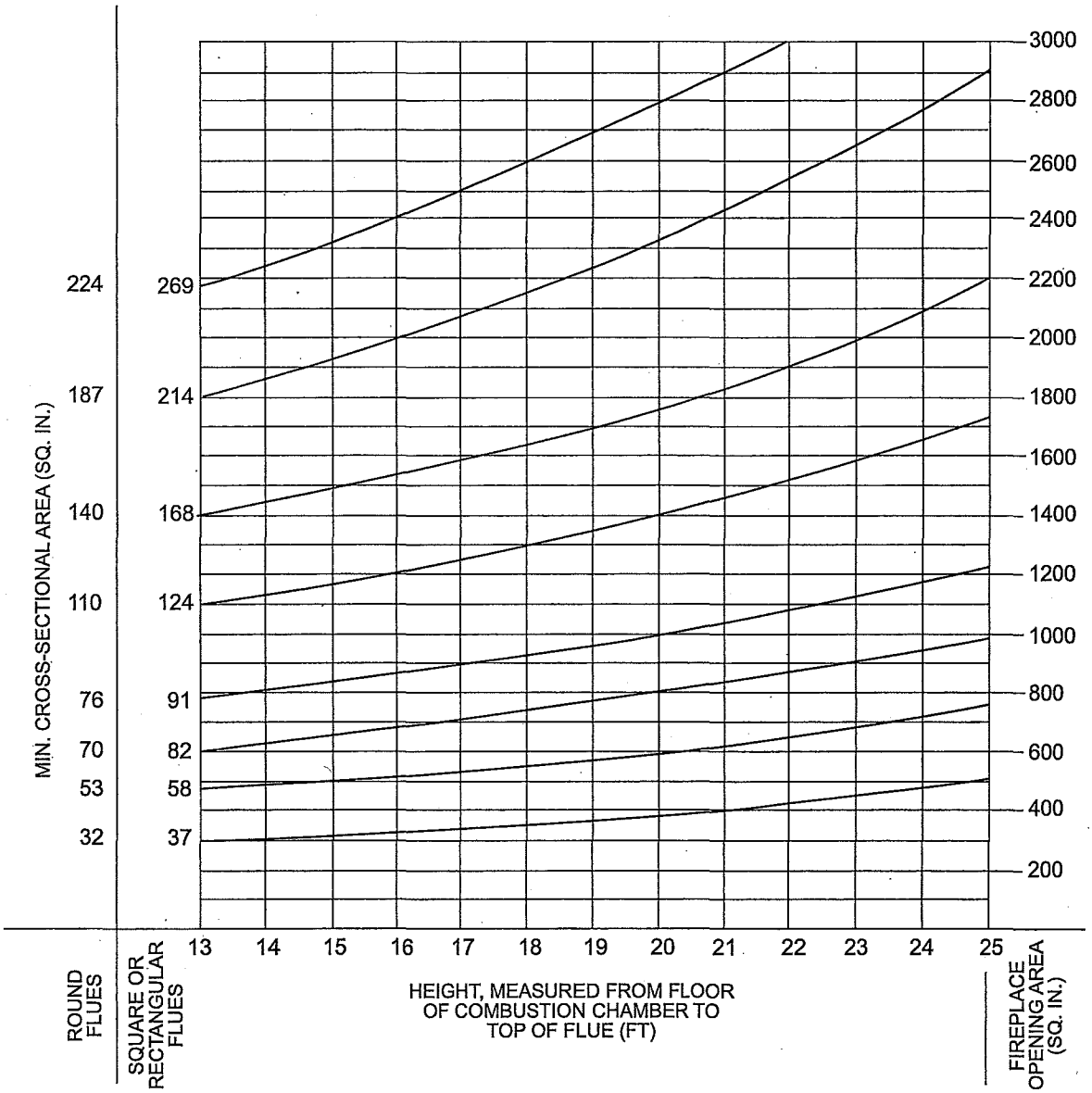

For SI: 1 foot = 304.8 mm, 1 square inch = 645.16 mm^2.

FIGURE R1003.15.2
FLUE SIZES FOR MASONRY CHIMNEYS

2900

2. Where masonry chimneys are constructed as part of masonry or concrete walls, combustible materials shall not be in contact with the masonry or concrete wall less than 12 inches (305 mm) from the inside surface of the nearest flue lining.
3. Exposed combustible trim and the edges of sheathing materials, such as wood siding and flooring, shall be permitted to abut the masonry chimney side walls, in accordance with Figure R1003.18, provided such combustible trim or sheathing is not less than 8 inches (203 mm) from the inside surface of the nearest flue lining.

R1003.19 Chimney fireblocking. Spaces between chimneys and floors and ceilings through which chimneys pass shall be fireblocked with noncombustible material securely fastened in place. The fireblocking of spaces between chimneys and wood joists, beams or headers shall be self-supporting or be placed on strips of metal or metal lath laid across the spaces between combustible material and the chimney.

R1003.20 Chimney crickets. Chimneys shall be provided with crickets where the dimension parallel to the ridgeline is greater than 30 inches (762 mm) and does not intersect the ridgeline. The intersection of the cricket and the chimney shall be flashed and counterflashed in the same manner as normal roof-chimney intersections. Crickets shall be constructed in compliance with Figure R1003.20 and Table R1003.20.

TABLE R1003.20
CRICKET DIMENSIONS

ROOF SLOPE	H
12 - 12	$^1/_2$ of W
8 - 12	$^1/_3$ of W
6 - 12	$^1/_4$ of W
4 - 12	$^1/_6$ of W
3 - 12	$^1/_8$ of W

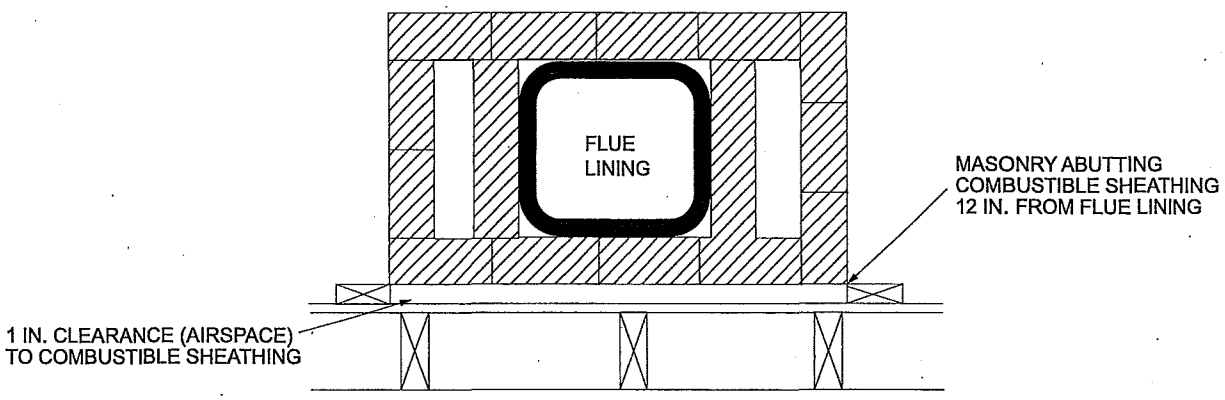

For SI: 1 inch = 25.4 mm.

FIGURE R1003.18
CLEARANCE FROM COMBUSTIBLES

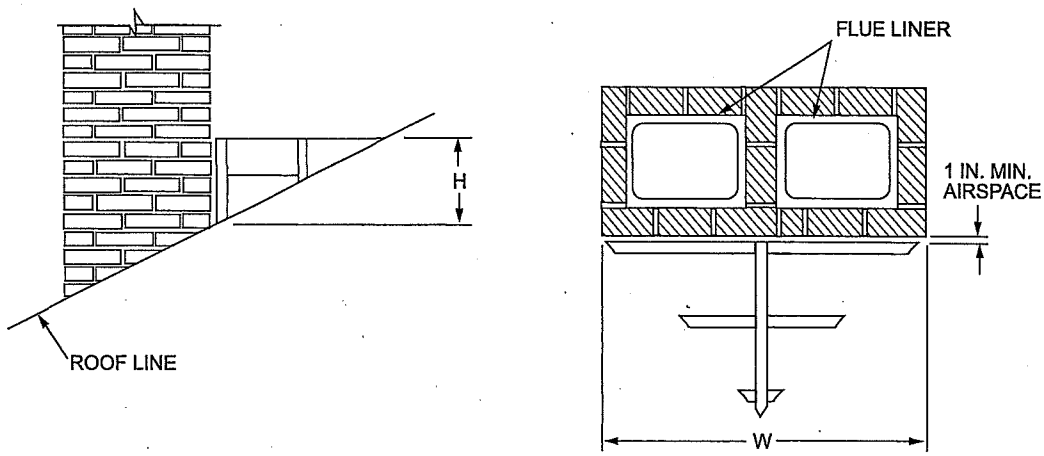

For SI: 1 inch = 25.4 mm.

FIGURE R1003.20
CHIMNEY CRICKET

2901

SECTION R1004
FACTORY-BUILT FIREPLACES

R1004.1 General. Factory-built fireplaces shall be *listed* and *labeled* and shall be installed in accordance with the conditions of the *listing*. Factory-built fireplaces shall be tested in accordance with UL 127.

R1004.2 Hearth extensions. Hearth extensions of *approved* factory-built fireplaces shall be installed in accordance with the *listing* of the fireplace. The hearth extension shall be readily distinguishable from the surrounding floor area. Listed and labeled hearth extensions shall comply with UL 1618.

R1004.3 Decorative shrouds. Decorative shrouds shall not be installed at the termination of chimneys for factory-built fireplaces except where the shrouds are listed and *labeled* for use with the specific factory-built fireplace system and installed in accordance with the manufacturer's instructions.

R1004.4 Unvented gas log heaters. An unvented gas log heater shall not be installed in a factory-built fireplace unless the fireplace system has been specifically tested, *listed* and *labeled* for such use in accordance with UL 127.

R1004.5 Gasketed fireplace doors. A gasketed fireplace door shall not be installed on a factory-built fireplace except where the fireplace system has been specifically tested, listed and labeled for such use in accordance with UL 127.

SECTION R1005
FACTORY-BUILT CHIMNEYS

R1005.1 Listing. Factory-built chimneys shall be *listed* and *labeled* and shall be installed and terminated in accordance with the manufacturer's instructions.

R1005.2 Decorative shrouds. Decorative shrouds shall not be installed at the termination of factory-built chimneys except where the shrouds are *listed* and *labeled* for use with the specific factory-built chimney system and installed in accordance with the manufacturer's instructions.

R1005.3 Solid-fuel appliances. Factory-built chimneys installed in *dwelling units* with solid-fuel-burning *appliances* shall comply with the Type HT requirements of UL 103 and shall be marked "Type HT and "Residential Type and Building Heating *Appliance* Chimney."

Exception: Chimneys for use with open combustion chamber fireplaces shall comply with the requirements of UL 103 and shall be marked "Residential Type and Building Heating *Appliance* Chimney."

Chimneys for use with open combustion chamber *appliances* installed in buildings other than *dwelling units* shall comply with the requirements of UL 103 and shall be marked "Building Heating *Appliance* Chimney" or "Residential Type and Building Heating *Appliance* Chimney."

R1005.4 Factory-built fireplaces. Chimneys for use with factory-built fireplaces shall comply with the requirements of UL 127.

R1005.5 Support. Where factory-built chimneys are supported by structural members, such as joists and rafters, those members shall be designed to support the additional load.

R1005.6 Medium-heat appliances. Factory-built chimneys for medium-heat *appliances* producing flue gases having a temperature above 1,000°F (538°C), measured at the entrance to the chimney, shall comply with UL 959.

R1005.7 Factory-built chimney offsets. Where a factory-built chimney assembly incorporates offsets, no part of the chimney shall be at an angle of more than 30 degrees (0.52 rad) from vertical at any point in the assembly and the chimney assembly shall not include more than four elbows.

SECTION R1006
EXTERIOR AIR SUPPLY

R1006.1 Exterior air. Factory-built or masonry fireplaces covered in this chapter shall be equipped with an exterior air supply to ensure proper fuel combustion unless the room is mechanically ventilated and controlled so that the indoor pressure is neutral or positive.

R1006.1.1 Factory-built fireplaces. Exterior *combustion air* ducts for factory-built fireplaces shall be a *listed* component of the fireplace and shall be installed in accordance with the fireplace manufacturer's instructions.

R1006.1.2 Masonry fireplaces. *Listed combustion air* ducts for masonry fireplaces shall be installed in accordance with the terms of their *listing* and the manufacturer's instructions.

R1006.2 Exterior air intake. The exterior air intake shall be capable of supplying all *combustion air* from the exterior of the *dwelling* or from spaces within the *dwelling* ventilated with outdoor air such as nonmechanically ventilated crawl or *attic* spaces. The exterior air intake shall not be located within the garage or basement of the dwelling. The exterior air intake, for other than listed factory-built fireplaces, shall not be located at an elevation higher than the firebox. The exterior air intake shall be covered with a corrosion-resistant screen of $^1/_4$-inch (6.4 mm) mesh.

R1006.3 Clearance. Unlisted *combustion air* ducts shall be installed with a minimum 1-inch (25 mm) clearance to combustibles for all parts of the duct within 5 feet (1524 mm) of the duct outlet.

R1006.4 Passageway. The *combustion air* passageway shall be not less than 6 square inches (3870 mm^2) and not more than 55 square inches (0.035 m^2), except that *combustion air* systems for listed fireplaces shall be constructed in accordance with the fireplace manufacturer's instructions.

R1006.5 Outlet. The exterior air outlet shall be located in the back or side of the firebox chamber or shall be located outside of the firebox, at the level of the hearth and not greater than 24 inches (610 mm) from the firebox opening. The outlet shall be closable and designed to prevent burning material from dropping into concealed combustible spaces.

Part IV—Energy Conservation

CHAPTER 11 [RE]

ENERGY EFFICIENCY

SECTION N1101
GENERAL

N1101.1 Scope. This chapter regulates the energy efficiency for the design and construction of buildings regulated by this code.

Note: The text of the following Sections N1101.2 through N1105 is extracted from the 2012 edition of the International Energy Conservation Code—Residential Provisions *and has been editorially revised to conform to the scope and application of this code. The section numbers appearing in parenthesis after each section number are the section numbers of the corresponding text in the* International Energy Conservation Code—Residential Provisions.

N1101.2 (R101.3) Intent. This chapter shall regulate the design and construction of buildings for the effective use and conservation of energy over the useful life of each *building*. This chapter is intended to provide flexibility to permit the use of innovative approaches and techniques to achieve this objective. This chapter is not intended to abridge safety, health or environmental requirements contained in other applicable codes or ordinances.

N1101.3 (R101.5.1) Compliance materials. The *building official* shall be permitted to approve specific computer software, worksheets, compliance manuals and other similar materials that meet the intent of this code.

N1101.4 (R102.1.1) Above code programs. The *building official* or other authority having jurisdiction shall be permitted to deem a national, state or local energy-efficiency program to exceed the energy efficiency required by this code. Buildings *approved* in writing by such an energy-efficiency program shall be considered in compliance with this code. The requirements identified as "mandatory" in this chapter, as applicable, shall be met.

N1101.5 (R103.2) Information on construction documents. Construction documents shall be drawn to scale upon suitable material. Electronic media documents are permitted to be submitted when *approved* by the *building official*. Construction documents shall be of sufficient clarity to indicate the location, nature and extent of the work proposed, and show in sufficient detail pertinent data and features of the building, systems and equipment as herein governed. Details shall include, but are not limited to, as applicable:

1. Insulation materials and their *R*-values.
2. Fenestration *U*-factors and SHGCs.
3. Area-weighted *U*-factor and SHGC calculations.
4. Mechanical system design criteria.
5. Mechanical and service water heating system and equipment types, sizes and efficiencies.
6. Equipment and system controls.
7. Duct sealing, duct and pipe insulation and location.
8. Air sealing details.

N1101.5.1 (R103.2.1) Thermal envelope depiction. The building's thermal envelope shall be represented on the construction drawings.

N1101.6 (R202) Defined terms. The following words and terms shall, for the purposes of this chapter, have the meanings shown herein.

ABOVE-GRADE WALL. A wall more than 50 percent above grade and enclosing *conditioned space*. This includes between-floor spandrels, peripheral edges of floors, roof and basement knee walls, dormer walls, gable end walls, walls enclosing a mansard roof and skylight shafts.

ACCESSIBLE. Admitting close approach as a result of not being guarded by locked doors, elevation or other effective means (see "Readily *accessible*").

ADDITION. An extension or increase in the *conditioned space* floor area or height of a building or structure.

AIR BARRIER. Material(s) assembled and joined together to provide a barrier to air leakage through the building envelope. An air barrier may be a single material or a combination of materials.

ALTERATION. Any construction, retrofit or renovation to an existing structure other than repair or addition that requires a permit. Also, a change in a building, electrical, gas, mechanical or plumbing system that involves an extension, addition or change to the arrangement, type or purpose of the original installation that requires a permit.

AUTOMATIC. Self-acting, operating by its own mechanism when actuated by some impersonal influence, as, for example, a change in current strength, pressure, temperature or mechanical configuration (see "Manual").

BASEMENT WALL. A wall 50 percent or more below grade and enclosing *conditioned space*.

BUILDING. Any structure used or intended for supporting or sheltering any use or occupancy, including any mechanical systems, service water heating systems and electric power and lighting systems located on the building site and supporting the building.

BUILDING SITE. A continguous area of land that is under the ownership or control of one entity.

BUILDING THERMAL ENVELOPE. The basement walls, exterior walls, floor, roof and any other building elements that enclose *conditioned space* or provide a boundary between *conditioned space* and exempt or unconditioned space.

***C*-FACTOR (THERMAL CONDUCTANCE).** The coefficient of heat transmission (surface to surface) through a building component or assembly, equal to the time rate of heat flow per unit area and the unit temperature difference between the warm side and cold side surfaces (Btu/h · ft^2 · °F) [W/(m^2 · K)].

CIRCULATING HOT WATER SYSTEM. A specifically designed water distribution system where one or more pumps are operated in the service hot water piping to circulate heated water from the water-heating equipment to fixtures and back to the water-heating equipment.

CLIMATE ZONE. A geographical region based on climatic criteria as specified in this code.

CONDITIONED FLOOR AREA. The horizontal projection of the floors associated with the *conditioned space*.

CONDITIONED SPACE. An area, room or space that is enclosed within the building thermal envelope and that is directly heated or cooled or indirectly heated or cooled. Spaces are indirectly heated or cooled where they communicate through openings with conditioned spaces, where they are separated from conditioned spaces by uninsulated walls, floors or ceilings, or where they contain uninsulated ducts, piping or other sources of heating or cooling.

CONTINUOUS AIR BARRIER. A combination of materials and assemblies that restrict or prevent the passage of air through the building thermal envelope.

CONTINUOUS INSULATION (ci). Insulating material that is continuous across all structural members without thermal bridges other than fasteners and service openings. It is installed on the interior or exterior, or is integral to any opaque surface, of the building envelope.

CRAWL SPACE WALL. The opaque portion of a wall that encloses a crawl space and is partially or totally below grade.

CURTAIN WALL. Fenestration products used to create an external nonload-bearing wall that is designed to separate the exterior and interior environments.

DEMAND RECIRCULATION WATER SYSTEM. A water distribution system where pump(s) prime the service hot water piping with heated water upon demand for hot water.

DUCT. A tube or conduit utilized for conveying air. The air passages of self-contained systems are not to be construed as air ducts.

DUCT SYSTEM. A continuous passageway for the transmission of air that, in addition to ducts, includes duct fittings, dampers, plenums, fans and accessory air-handling equipment and appliances.

ENERGY ANALYSIS. A method for estimating the annual energy use of the *proposed design* and *standard reference design* based on estimates of energy use.

ENERGY COST. The total estimated annual cost for purchased energy for the building functions regulated by this code, including applicable demand charges.

ENERGY SIMULATION TOOL. An *approved* software program or calculation-based methodology that projects the annual energy use of a building.

ERI REFERENCE DESIGN. A version of the rated design that meets the minimum requirements of the 2006 *International Energy Conservation Code.*

EXTERIOR WALL. Walls including both above-grade walls and basement walls.

FENESTRATION. Products classified as either *vertical fenestration* or *skylights*.

FENESTRATION PRODUCT, SITE-BUILT. A fenestration designed to be made up of field-glazed or field-assembled units using specific factory cut or otherwise factory-formed framing and glazing units. Examples of site-built fenestration include storefront systems, curtain walls, and atrium roof systems.

FENESTRATION, VERTICAL. Windows (fixed or moveable), opaque doors, glazed doors, glazed block and combination opaque/glazed doors composed of glass or other transparent or translucent glazing materials and installed at a slope of a least 60 degrees (1.05 rad) from horizontal.

HEATED SLAB. Slab-on-grade construction in which the heating elements, hydronic tubing, or hot air distribution system is in contact with, or placed within or under, the slab.

HIGH-EFFICACY LAMPS. Compact fluorescent lamps, T-8 or smaller diameter linear fluorescent lamps, or lamps with a minimum efficacy of:

1. 60 lumens per watt for lamps over 40 watts;
2. 50 lumens per watt for lamps over 15 watts to 40 watts; and
3. 40 lumens per watt for lamps 15 watts or less.

HISTORIC BUILDING. Buildings that are listed in or eligible for listing in the National Register of Historic Places, or designated as historic under an appropriate state or local law.

INFILTRATION. The uncontrolled inward air leakage into a building caused by the pressure effects of wind or the effect of differences in the indoor and outdoor air density or both.

INSULATED SIDING. A type of continuous insulation with manufacturer-installed insulating material as an integral part of the cladding product having a minimum *R*-value of R-2.

INSULATING SHEATHING. An insulating board with a core material having a minimum *R*-value of R-2.

LOW-VOLTAGE LIGHTING. Lighting equipment powered through a transformer such as a cable conductor, a rail conductor and track lighting.

MANUAL. Capable of being operated by personal intervention (see "Automatic").

PROPOSED DESIGN. A description of the proposed building used to estimate annual energy use for determining compliance based on total building performance.

RATED DESIGN. A description of the proposed *building* used to determine the energy rating index.

READILY ACCESSIBLE. Capable of being reached quickly for operation, renewal or inspection without requiring those to whom ready access is requisite to climb over or remove obstacles or to resort to portable ladders or access equipment (see "*Accessible*").

REPAIR. The reconstruction or renewal of any part of an existing building for the purpose of its maintenance or to correct damage. For definitions applicable in Chapter 11, see Section N1101.9.

REROOFING. The process of recovering or replacing an existing *roof covering*. See "Roof recover" and "Roof replacement."

RESIDENTIAL BUILDING. For this chapter, includes detached one- and two-family dwellings and multiple single-family dwellings (townhouses) as well as Group R-2, R-3 and R-4 buildings three stories or less in height above grade plane.

ROOF RECOVER. The process of installing an additional *roof covering* over a prepared existing *roof covering* without removing the existing *roof covering*.

ROOF REPAIR. Reconstruction or renewal of any part of an existing roof for the purposes of its maintenance.

ROOF REPLACEMENT. The process of removing the existing *roof covering*, repairing any damaged substrate and installing a new *roof covering*.

R-VALUE (THERMAL RESISTANCE). The inverse of the time rate of heat flow through a body from one of its bounding surfaces to the other surface for a unit temperature difference between the two surfaces, under steady state conditions, per unit area ($h \cdot ft^2 \cdot °F/Btu$) [$(m^2 \cdot K)/W$].

SERVICE WATER HEATING. Supply of hot water for purposes other than comfort heating.

SKYLIGHT. Glass or other transparent or translucent glazing material installed at a slope of less than 60 degrees (1.05 rad) from horizontal. Glazing material in skylights, including unit skylights, solariums, sunrooms, roofs and sloped walls is included in this definition.

SOLAR HEAT GAIN COEFFICIENT (SHGC). The ratio of the solar heat gain entering the space through the fenestration assembly to the incident solar radiation. Solar heat gain includes directly transmitted solar heat and absorbed solar radiation that is then reradiated, conducted or convected into the space.

STANDARD REFERENCE DESIGN. A version of the *proposed design* that meets the minimum requirements of this code and is used to determine the maximum annual energy use requirement for compliance based on total building performance.

SUNROOM. A one-story structure attached to a dwelling with a glazing area in excess of 40 percent of the gross area of the structure's exterior walls and roof.

THERMAL ISOLATION. Physical and space conditioning separation from *conditioned space(s)*. The *conditioned space*(s) shall be controlled as separate zones for heating and cooling or conditioned by separate equipment.

THERMOSTAT. An automatic control device used to maintain temperature at a fixed or adjustable set point.

***U*-FACTOR (THERMAL TRANSMITTANCE).** The coefficient of heat transmission (air to air) through a building component or assembly, equal to the time rate of heat flow per unit area and unit temperature difference between the warm side and cold side air films ($Btu/h \cdot ft^2 \cdot °F$) [$W/(m^2 \cdot K)$].

VENTILATION AIR. That portion of supply air that comes from outside (outdoors) plus any recirculated air that has been treated to maintain the desired quality of air within a designated space.

VISIBLE TRANSMITTANCE [VT]. The ratio of visible light entering the space through the fenestration product assembly to the incident visible light, Visible Transmittance, includes the effects of glazing material and frame and is expressed as a number between 0 and 1.

WHOLE HOUSE MECHANICAL VENTILATION SYSTEM. An exhaust system, supply system, or combination thereof that is designed to mechanically exchange indoor air with outdoor air when operating continuously or through a programmed intermittent schedule to satisfy the whole house ventilation rates.

ZONE. A space or group of spaces within a building with heating or cooling requirements that are sufficiently similar so that desired conditions can be maintained throughout using a single controlling device.

N1101.7 (R301.1) Climate zones. Climate zones from Figure N1101.7 or Table N1101.7 shall be used in determining the applicable requirements in Sections N1101 through N1111. Locations not in Table N1101.7 (outside the United States) shall be assigned a climate zone based on Section N101.10.2.

N1101.7.1 (R301.2) Warm humid counties. Warm humid counties are identified in Table N1101.7 by an asterisk.

N1101.7.2 (R301.3) International climate zones. The climate zone for any location outside the United States shall be determined by applying Table N1101.7.2(1) and then Table N1101.7.2(2).

N1101.8 (R301.4) Tropical climate zone. The tropical climate zone shall be defined as:

1. Hawaii, Puerto Rico, Guam, American Samoa, US Virgin Islands, Commonwealth of Northern Mariana Islands; and
2. Islands in the area between the Tropic of Cancer and the Tropic of Capricorn.

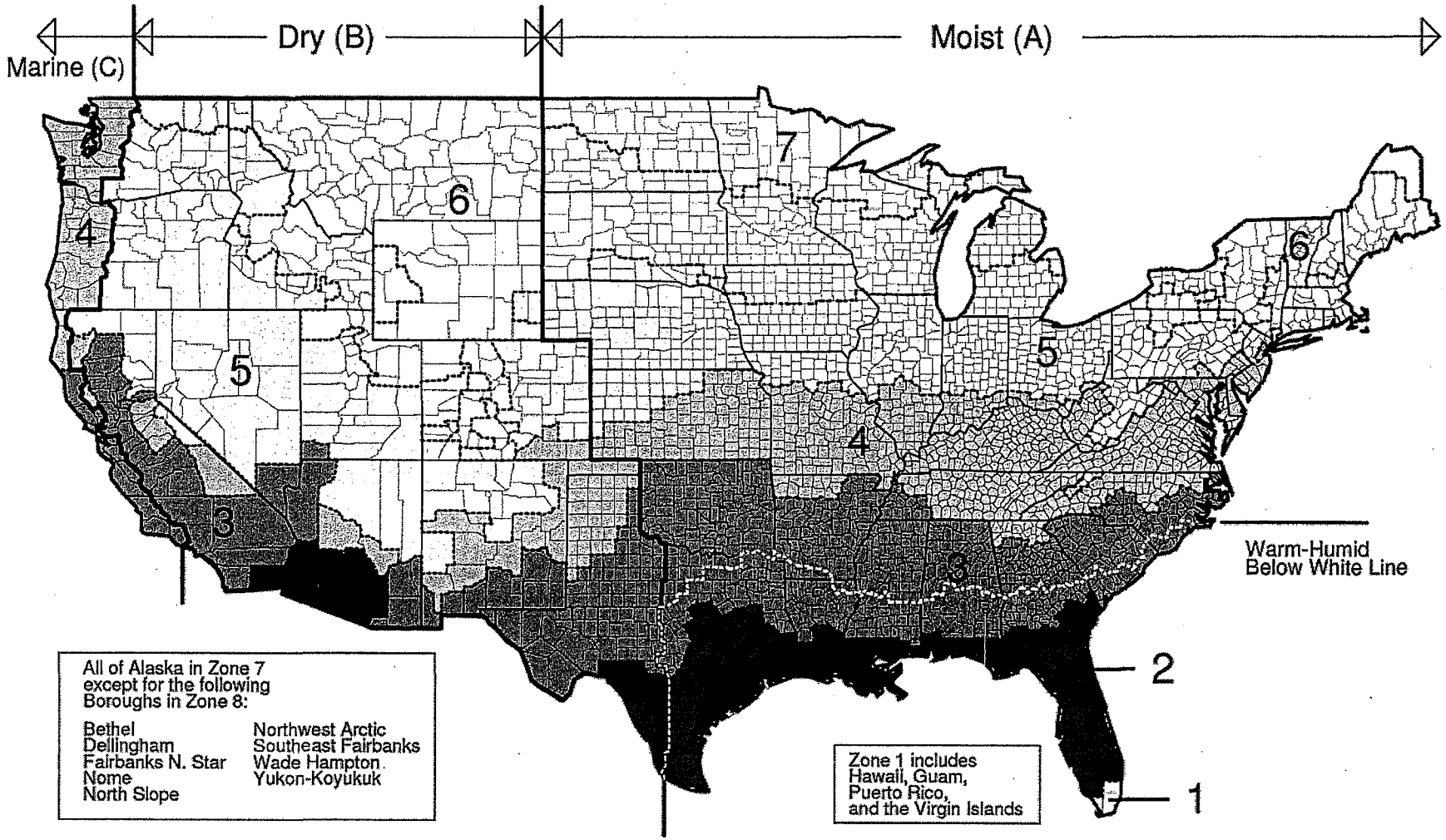

FIGURE N1101.7 (R301.1)
CLIMATE ZONES

TABLE N1101.7 (R301.1)
CLIMATE ZONES, MOISTURE REGIMES, AND WARM-HUMID DESIGNATIONS BY STATE, COUNTY AND TERRITORY

Key: A – Moist, B – Dry, C – Marine. Absence of moisture designation indicates moisture regime is irrelevant. Asterisk (*) indicates a warm-humid location.

US STATES

ALABAMA

3A Autauga*
2A Baldwin*
3A Barbour*
3A Bibb
3A Blount
3A Bullock*
3A Butler*
3A Calhoun
3A Chambers
3A Cherokee
3A Chilton
3A Choctaw*
3A Clarke*
3A Clay
3A Cleburne
3A Coffee*
3A Colbert
3A Conecuh*
3A Coosa
3A Covington*
3A Crenshaw*
3A Cullman
3A Dale*
3A Dallas*
3A DeKalb
3A Elmore*
3A Escambia*
3A Etowah
3A Fayette
3A Franklin
3A Geneva*
3A Greene
3A Hale
3A Henry*
3A Houston*
3A Jackson
3A Jefferson
3A Lamar
3A Lauderdale
3A Lawrence
3A Lee
3A Limestone
3A Lowndes*
3A Macon*
3A Madison
3A Marengo*
3A Marion
3A Marshall
2A Mobile*
3A Monroe*
3A Montgomery*
3A Morgan
3A Perry*
3A Pickens
3A Pike*
3A Randolph
3A Russell*
3A Shelby
3A St. Clair
3A Sumter
3A Talladega
3A Tallapoosa
3A Tuscaloosa
3A Walker
3A Washington*
3A Wilcox*
3A Winston

ALASKA

7 Aleutians East
7 Aleutians West
7 Anchorage
8 Bethel
7 Bristol Bay
7 Denali
8 Dillingham
8 Fairbanks North Star
7 Haines
7 Juneau
7 Kenai Peninsula
7 Ketchikan Gateway
7 Kodiak Island
7 Lake and Peninsula
7 Matanuska-Susitna
8 Nome
8 North Slope
8 Northwest Arctic
7 Prince of Wales Outer Ketchikan
7 Sitka
7 Skagway-Hoonah-Angoon
8 Southeast Fairbanks
7 Valdez-Cordova
8 Wade Hampton
7 Wrangell-Petersburg
7 Yakutat
8 Yukon-Koyukuk

ARIZONA

5B Apache
3B Cochise
5B Coconino
4B Gila
3B Graham
3B Greenlee
2B La Paz
2B Maricopa
3B Mohave
5B Navajo
2B Pima
2B Pinal
3B Santa Cruz
4B Yavapai
2B Yuma

ARKANSAS

3A Arkansas
3A Ashley
4A Baxter
4A Benton
4A Boone
3A Bradley
3A Calhoun
4A Carroll
3A Chicot
3A Clark
3A Clay
3A Cleburne
3A Cleveland
3A Columbia*
3A Conway
3A Craighead
3A Crawford
3A Crittenden
3A Cross
3A Dallas
3A Desha
3A Drew
3A Faulkner
3A Franklin
4A Fulton
3A Garland
3A Grant
3A Greene
3A Hempstead*
3A Hot Spring
3A Howard
3A Independence
4A Izard
3A Jackson
3A Jefferson
3A Johnson
3A Lafayette*
3A Lawrence
3A Lee
3A Lincoln
3A Little River*
3A Logan
3A Lonoke
4A Madison
4A Marion
3A Miller*
3A Mississippi
3A Monroe
3A Montgomery
3A Nevada
4A Newton
3A Ouachita
3A Perry
3A Phillips
3A Pike
3A Poinsett
3A Polk
3A Pope
3A Prairie
3A Pulaski
3A Randolph
3A Saline
3A Scott
4A Searcy
3A Sebastian
3A Sevier*
3A Sharp
3A St. Francis
4A Stone
3A Union*
3A Van Buren
4A Washington
3A White
3A Woodruff
3A Yell

CALIFORNIA

3C Alameda
6B Alpine
4B Amador
3B Butte
4B Calaveras
3B Colusa
3B Contra Costa
4C Del Norte
4B El Dorado
3B Fresno
3B Glenn

(continued)

TABLE N1101.7 (R301.1)—continued
CLIMATE ZONES, MOISTURE REGIMES, AND WARM-HUMID DESIGNATIONS BY STATE, COUNTY AND TERRITORY

4C Humboldt
2B Imperial
4B Inyo
3B Kern
3B Kings
4B Lake
5B Lassen
3B Los Angeles
3B Madera
3C Marin
4B Mariposa
3C Mendocino
3B Merced
5B Modoc
6B Mono
3C Monterey
3C Napa
5B Nevada
3B Orange
3B Placer
5B Plumas
3B Riverside
3B Sacramento
3C San Benito
3B San Bernardino
3B San Diego
3C San Francisco
3B San Joaquin
3C San Luis Obispo
3C San Mateo
3C Santa Barbara
3C Santa Clara
3C Santa Cruz
3B Shasta
5B Sierra
5B Siskiyou
3B Solano
3C Sonoma
3B Stanislaus
3B Sutter
3B Tehama
4B Trinity
3B Tulare
4B Tuolumne
3C Ventura
3B Yolo
3B Yuba

COLORADO

5B Adams
6B Alamosa
5B Arapahoe
6B Archuleta
4B Baca
5B Bent
5B Boulder
5B Broomfield
6B Chaffee
5B Cheyenne
7 Clear Creek
6B Conejos
6B Costilla
5B Crowley
6B Custer
5B Delta
5B Denver
6B Dolores
5B Douglas
6B Eagle
5B Elbert
5B El Paso
5B Fremont
5B Garfield
5B Gilpin
7 Grand
7 Gunnison
7 Hinsdale
5B Huerfano
7 Jackson
5B Jefferson
5B Kiowa
5B Kit Carson
7 Lake
5B La Plata
5B Larimer
4B Las Animas
5B Lincoln
5B Logan
5B Mesa
7 Mineral
6B Moffat
5B Montezuma
5B Montrose
5B Morgan
4B Otero
6B Ouray
7 Park
5B Phillips
7 Pitkin
5B Prowers
5B Pueblo
6B Rio Blanco
7 Rio Grande
7 Routt
6B Saguache
7 San Juan
6B San Miguel
5B Sedgwick
7 Summit
5B Teller
5B Washington
5B Weld
5B Yuma

CONNECTICUT

5A (all)

DELAWARE

4A (all)

DISTRICT OF COLUMBIA

4A (all)

FLORIDA

2A Alachua*
2A Baker*
2A Bay*
2A Bradford*
2A Brevard*
1A Broward*
2A Calhoun*
2A Charlotte*
2A Citrus*
2A Clay*
2A Collier*
2A Columbia*
2A DeSoto*
2A Dixie*
2A Duval*
2A Escambia*
2A Flagler*
2A Franklin*
2A Gadsden*
2A Gilchrist*
2A Glades*
2A Gulf*
2A Hamilton*
2A Hardee*
2A Hendry*
2A Hernando*
2A Highlands*
2A Hillsborough*
2A Holmes*
2A Indian River*
2A Jackson*
2A Jefferson*
2A Lafayette*
2A Lake*
2A Lee*
2A Leon*
2A Levy*
2A Liberty*
2A Madison*
2A Manatee*
2A Marion*
2A Martin*
1A Miami-Dade*
1A Monroe*
2A Nassau*
2A Okaloosa*
2A Okeechobee*
2A Orange*
2A Osceola*
2A Palm Beach*
2A Pasco*
2A Pinellas*
2A Polk*
2A Putnam*
2A Santa Rosa*
2A Sarasota*
2A Seminole*
2A St. Johns*
2A St. Lucie*
2A Sumter*
2A Suwannee*
2A Taylor*
2A Union*
2A Volusia*
2A Wakulla*
2A Walton*
2A Washington*

GEORGIA

2A Appling*
2A Atkinson*
2A Bacon*
2A Baker*
3A Baldwin
4A Banks
3A Barrow
3A Bartow
3A Ben Hill*
2A Berrien*
3A Bibb
3A Bleckley*
2A Brantley*
2A Brooks*
2A Bryan*
3A Bulloch*
3A Burke
3A Butts
3A Calhoun*
2A Camden*
3A Candler*
3A Carroll
4A Catoosa
2A Charlton*
2A Chatham*
3A Chattahoochee*
4A Chattooga
3A Cherokee
3A Clarke
3A Clay*
3A Clayton
2A Clinch*
3A Cobb
3A Coffee*
2A Colquitt*
3A Columbia
2A Cook*
3A Coweta

(continued)

TABLE N1101.7 (R301.1)—continued
CLIMATE ZONES, MOISTURE REGIMES, AND WARM-HUMID DESIGNATIONS BY STATE, COUNTY AND TERRITORY

3A Crawford
3A Crisp*
4A Dade
4A Dawson
2A Decatur*
3A DeKalb
3A Dodge*
3A Dooly*
3A Dougherty*
3A Douglas
3A Early*
2A Echols*
2A Effingham*
3A Elbert
3A Emanuel*
2A Evans*
4A Fannin
3A Fayette
4A Floyd
3A Forsyth
4A Franklin
3A Fulton
4A Gilmer
3A Glascock
2A Glynn*
4A Gordon
2A Grady*
3A Greene
3A Gwinnett
4A Habersham
4A Hall
3A Hancock
3A Haralson
3A Harris
3A Hart
3A Heard
3A Henry
3A Houston*
3A Irwin*
3A Jackson
3A Jasper
2A Jeff Davis*
3A Jefferson
3A Jenkins*
3A Johnson*
3A Jones
3A Lamar
2A Lanier*
3A Laurens*
3A Lee*
2A Liberty*
3A Lincoln
2A Long*
2A Lowndes*
4A Lumpkin
3A Macon*
3A Madison
3A Marion*
3A McDuffie
2A McIntosh*
3A Meriwether
2A Miller*
2A Mitchell*
3A Monroe
3A Montgomery*
3A Morgan
4A Murray
3A Muscogee
3A Newton
3A Oconee
3A Oglethorpe
3A Paulding
3A Peach*
4A Pickens
2A Pierce*
3A Pike
3A Polk
3A Pulaski*
3A Putnam
3A Quitman*
4A Rabun
3A Randolph*
3A Richmond
3A Rockdale
3A Schley*
3A Screven*
2A Seminole*
3A Spalding
4A Stephens
3A Stewart*
3A Sumter*
3A Talbot
3A Taliaferro
2A Tattnall*
3A Taylor*
3A Telfair*
3A Terrell*
2A Thomas*
3A Tift*
2A Toombs*
4A Towns
3A Treutlen*
3A Troup
3A Turner*
3A Twiggs*
4A Union
3A Upson
4A Walker
3A Walton
2A Ware*
3A Warren
3A Washington
2A Wayne*
3A Webster*
3A Wheeler*
4A White
4A Whitfield
3A Wilcox*
3A Wilkes
3A Wilkinson
3A Worth*

HAWAII

1A (all)*

IDAHO

5B Ada
6B Adams
6B Bannock
6B Bear Lake
5B Benewah
6B Bingham
6B Blaine
6B Boise
6B Bonner
6B Bonneville
6B Boundary
6B Butte
6B Camas
5B Canyon
6B Caribou
5B Cassia
6B Clark
5B Clearwater
6B Custer
5B Elmore
6B Franklin
6B Fremont
5B Gem
5B Gooding
5B Idaho
6B Jefferson
5B Jerome
5B Kootenai
5B Latah
6B Lemhi
5B Lewis
5B Lincoln
6B Madison
5B Minidoka
5B Nez Perce
6B Oneida
5B Owyhee
5B Payette
5B Power
5B Shoshone
6B Teton
5B Twin Falls
6B Valley
5B Washington

ILLINOIS

5A Adams
4A Alexander
4A Bond
5A Boone
5A Brown
5A Bureau
5A Calhoun
5A Carroll
5A Cass
5A Champaign
4A Christian
5A Clark
4A Clay
4A Clinton
5A Coles
5A Cook
4A Crawford
5A Cumberland
5A DeKalb
5A De Witt
5A Douglas
5A DuPage
5A Edgar
4A Edwards
4A Effingham
4A Fayette
5A Ford
4A Franklin
5A Fulton
4A Gallatin
5A Greene
5A Grundy
4A Hamilton
5A Hancock
4A Hardin
5A Henderson
5A Henry
5A Iroquois
4A Jackson
4A Jasper
4A Jefferson
5A Jersey
5A Jo Daviess
4A Johnson
5A Kane
5A Kankakee
5A Kendall
5A Knox
5A Lake
5A La Salle
4A Lawrence
5A Lee
5A Livingston
5A Logan
5A Macon
4A Macoupin
4A Madison
4A Marion
5A Marshall
5A Mason
4A Massac
5A McDonough
5A McHenry

(continued)

TABLE N1101.7 (R301.1)—continued
CLIMATE ZONES, MOISTURE REGIMES, AND WARM-HUMID DESIGNATIONS BY STATE, COUNTY AND TERRITORY

5A McLean
5A Menard
5A Mercer
4A Monroe
4A Montgomery
5A Morgan
5A Moultrie
5A Ogle
5A Peoria
4A Perry
5A Piatt
5A Pike
4A Pope
4A Pulaski
5A Putnam
4A Randolph
4A Richland
5A Rock Island
4A Saline
5A Sangamon
5A Schuyler
5A Scott
4A Shelby
5A Stark
4A St. Clair
5A Stephenson
5A Tazewell
4A Union
5A Vermilion
4A Wabash
5A Warren
4A Washington
4A Wayne
4A White
5A Whiteside
5A Will
4A Williamson
5A Winnebago
5A Woodford

INDIANA

5A Adams
5A Allen
5A Bartholomew
5A Benton
5A Blackford
5A Boone
4A Brown
5A Carroll
5A Cass
4A Clark
5A Clay
5A Clinton
4A Crawford
4A Daviess
4A Dearborn
5A Decatur
5A De Kalb
5A Delaware
4A Dubois
5A Elkhart
5A Fayette
4A Floyd
5A Fountain
5A Franklin
5A Fulton
4A Gibson
5A Grant
4A Greene
5A Hamilton
5A Hancock
4A Harrison
5A Hendricks
5A Henry
5A Howard
5A Huntington
4A Jackson
5A Jasper
5A Jay
4A Jefferson
4A Jennings
5A Johnson
4A Knox
5A Kosciusko
5A Lagrange
5A Lake
5A La Porte
4A Lawrence
5A Madison
5A Marion
5A Marshall
4A Martin
5A Miami
4A Monroe
5A Montgomery
5A Morgan
5A Newton
5A Noble
4A Ohio
4A Orange
5A Owen
5A Parke
4A Perry
4A Pike
5A Porter
4A Posey
5A Pulaski
5A Putnam
5A Randolph
4A Ripley
5A Rush
4A Scott
5A Shelby
4A Spencer
5A Starke
5A Steuben
5A St. Joseph
4A Sullivan
4A Switzerland
5A Tippecanoe
5A Tipton
5A Union
4A Vanderburgh
5A Vermillion
5A Vigo
5A Wabash
5A Warren
4A Warrick
4A Washington
5A Wayne
5A Wells
5A White
5A Whitley

IOWA

5A Adair
5A Adams
6A Allamakee
5A Appanoose
5A Audubon
5A Benton
6A Black Hawk
5A Boone
6A Bremer
6A Buchanan
6A Buena Vista
6A Butler
6A Calhoun
5A Carroll
5A Cass
5A Cedar
6A Cerro Gordo
6A Cherokee
6A Chickasaw
5A Clarke
6A Clay
6A Clayton
5A Clinton
5A Crawford
5A Dallas
5A Davis
5A Decatur
6A Delaware
5A Des Moines
6A Dickinson
5A Dubuque
6A Emmet
6A Fayette
6A Floyd
6A Franklin
5A Fremont
5A Greene
6A Grundy
5A Guthrie
6A Hamilton
6A Hancock
6A Hardin
5A Harrison
5A Henry
6A Howard
6A Humboldt
6A Ida
5A Iowa
5A Jackson
5A Jasper
5A Jefferson
5A Johnson
5A Jones
5A Keokuk
6A Kossuth
5A Lee
5A Linn
5A Louisa
5A Lucas
6A Lyon
5A Madison
5A Mahaska
5A Marion
5A Marshall
5A Mills
6A Mitchell
5A Monona
5A Monroe
5A Montgomery
5A Muscatine
6A O'Brien
6A Osceola
5A Page
6A Palo Alto
6A Plymouth
6A Pocahontas
5A Polk
5A Pottawattamie
5A Poweshiek
5A Ringgold
6A Sac
5A Scott
5A Shelby
6A Sioux
5A Story
5A Tama
5A Taylor
5A Union
5A Van Buren
5A Wapello
5A Warren
5A Washington
5A Wayne
6A Webster
6A Winnebago

(continued)

TABLE N1101.7 (R301.1)—continued
CLIMATE ZONES, MOISTURE REGIMES, AND WARM-HUMID DESIGNATIONS BY STATE, COUNTY AND TERRITORY

6A Winneshiek
5A Woodbury
6A Worth
6A Wright

KANSAS

4A Allen
4A Anderson
4A Atchison
4A Barber
4A Barton
4A Bourbon
4A Brown
4A Butler
4A Chase
4A Chautauqua
4A Cherokee
5A Cheyenne
4A Clark
4A Clay
5A Cloud
4A Coffey
4A Comanche
4A Cowley
4A Crawford
5A Decatur
4A Dickinson
4A Doniphan
4A Douglas
4A Edwards
4A Elk
5A Ellis
4A Ellsworth
4A Finney
4A Ford
4A Franklin
4A Geary
5A Gove
5A Graham
4A Grant
4A Gray
5A Greeley
4A Greenwood
5A Hamilton
4A Harper
4A Harvey
4A Haskell
4A Hodgeman
4A Jackson
4A Jefferson
5A Jewell
4A Johnson
4A Kearny
4A Kingman
4A Kiowa
4A Labette
5A Lane
4A Leavenworth
4A Lincoln
4A Linn
5A Logan
4A Lyon
4A Marion
4A Marshall
4A McPherson
4A Meade
4A Miami
5A Mitchell
4A Montgomery
4A Morris
4A Morton
4A Nemaha
4A Neosho
5A Ness
5A Norton
4A Osage
5A Osborne
4A Ottawa
4A Pawnee
5A Phillips
4A Pottawatomie
4A Pratt
5A Rawlins
4A Reno
5A Republic
4A Rice
4A Riley
5A Rooks
4A Rush
4A Russell
4A Saline
5A Scott
4A Sedgwick
4A Seward
4A Shawnee
5A Sheridan
5A Sherman
5A Smith
4A Stafford
4A Stanton
4A Stevens
4A Sumner
5A Thomas
5A Trego
4A Wabaunsee
5A Wallace
4A Washington
5A Wichita
4A Wilson
4A Woodson
4A Wyandotte

KENTUCKY

4A (all)

LOUISIANA

2A Acadia*
2A Allen*
2A Ascension*
2A Assumption*
2A Avoyelles*
2A Beauregard*
3A Bienville*
3A Bossier*
3A Caddo*
2A Calcasieu*
3A Caldwell*
2A Cameron*
3A Catahoula*
3A Claiborne*
3A Concordia*
3A De Soto*
2A East Baton Rouge*
3A East Carroll
2A East Feliciana*
2A Evangeline*
3A Franklin*
3A Grant*
2A Iberia*
2A Iberville*
3A Jackson*
2A Jefferson*
2A Jefferson Davis*
2A Lafayette*
2A Lafourche*
3A La Salle*
3A Lincoln*
2A Livingston*
3A Madison*
3A Morehouse
3A Natchitoches*
2A Orleans*
3A Ouachita*
2A Plaquemines*
2A Pointe Coupee*
2A Rapides*
3A Red River*
3A Richland*
3A Sabine*
2A St. Bernard*
2A St. Charles*
2A St. Helena*
2A St. James*
2A St. John the Baptist*
2A St. Landry*
2A St. Martin*
2A St. Mary*
2A St. Tammany*
2A Tangipahoa*
3A Tensas*
2A Terrebonne*
3A Union*
2A Vermilion*
3A Vernon*
2A Washington*
3A Webster*
2A West Baton Rouge*
3A West Carroll
2A West Feliciana*
3A Winn*

MAINE

6A Androscoggin
7 Aroostook
6A Cumberland
6A Franklin
6A Hancock
6A Kennebec
6A Knox
6A Lincoln
6A Oxford
6A Penobscot
6A Piscataquis
6A Sagadahoc
6A Somerset
6A Waldo
6A Washington
6A York

MARYLAND

4A Allegany
4A Anne Arundel
4A Baltimore
4A Baltimore (city)
4A Calvert
4A Caroline
4A Carroll
4A Cecil
4A Charles
4A Dorchester
4A Frederick
5A Garrett
4A Harford
4A Howard
4A Kent
4A Montgomery
4A Prince George's
4A Queen Anne's
4A Somerset
4A St. Mary's
4A Talbot
4A Washington
4A Wicomico
4A Worcester

MASSACHSETTS

5A (all)

MICHIGAN

6A Alcona
6A Alger

(continued)

TABLE N1101.7 (R301.1)—continued
CLIMATE ZONES, MOISTURE REGIMES, AND WARM-HUMID DESIGNATIONS BY STATE, COUNTY AND TERRITORY

5A Allegan
6A Alpena
6A Antrim
6A Arenac
7 Baraga
5A Barry
5A Bay
6A Benzie
5A Berrien
5A Branch
5A Calhoun
5A Cass
6A Charlevoix
6A Cheboygan
7 Chippewa
6A Clare
5A Clinton
6A Crawford
6A Delta
6A Dickinson
5A Eaton
6A Emmet
5A Genesee
6A Gladwin
7 Gogebic
6A Grand Traverse
5A Gratiot
5A Hillsdale
7 Houghton
6A Huron
5A Ingham
5A Ionia
6A Iosco
7 Iron
6A Isabella
5A Jackson
5A Kalamazoo
6A Kalkaska
5A Kent
7 Keweenaw
6A Lake
5A Lapeer
6A Leelanau
5A Lenawee
5A Livingston
7 Luce
7 Mackinac
5A Macomb
6A Manistee
6A Marquette
6A Mason
6A Mecosta
6A Menominee
5A Midland
6A Missaukee
5A Monroe
5A Montcalm
6A Montmorency
5A Muskegon
6A Newaygo
5A Oakland
6A Oceana
6A Ogemaw
7 Ontonagon
6A Osceola
6A Oscoda
6A Otsego
5A Ottawa
6A Presque Isle
6A Roscommon
5A Saginaw
6A Sanilac
7 Schoolcraft
5A Shiawassee
5A St. Clair
5A St. Joseph
5A Tuscola
5A Van Buren
5A Washtenaw
5A Wayne
6A Wexford

MINNESOTA

7 Aitkin
6A Anoka
7 Becker
7 Beltrami
6A Benton
6A Big Stone
6A Blue Earth
6A Brown
7 Carlton
6A Carver
7 Cass
6A Chippewa
6A Chisago
7 Clay
7 Clearwater
7 Cook
6A Cottonwood
7 Crow Wing
6A Dakota
6A Dodge
6A Douglas
6A Faribault
6A Fillmore
6A Freeborn
6A Goodhue
7 Grant
6A Hennepin
6A Houston
7 Hubbard
6A Isanti
7 Itasca
6A Jackson
7 Kanabec
6A Kandiyohi
7 Kittson
7 Koochiching
6A Lac qui Parle
7 Lake
7 Lake of the Woods
6A Le Sueur
6A Lincoln
6A Lyon
7 Mahnomen
7 Marshall
6A Martin
6A McLeod
6A Meeker
7 Mille Lacs
6A Morrison
6A Mower
6A Murray
6A Nicollet
6A Nobles
7 Norman
6A Olmsted
7 Otter Tail
7 Pennington
7 Pine
6A Pipestone
7 Polk
6A Pope
6A Ramsey
7 Red Lake
6A Redwood
6A Renville
6A Rice
6A Rock
7 Roseau
6A Scott
6A Sherburne
6A Sibley
6A Stearns
6A Steele
6A Stevens
7 St. Louis
6A Swift
6A Todd
6A Traverse
6A Wabasha
7 Wadena
6A Waseca
6A Washington
6A Watonwan
7 Wilkin
6A Winona
6A Wright
6A Yellow Medicine

MISSISSIPPI

3A Adams*
3A Alcorn
3A Amite*
3A Attala
3A Benton
3A Bolivar
3A Calhoun
3A Carroll
3A Chickasaw
3A Choctaw
3A Claiborne*
3A Clarke
3A Clay
3A Coahoma
3A Copiah*
3A Covington*
3A DeSoto
3A Forrest*
3A Franklin*
3A George*
3A Greene*
3A Grenada
2A Hancock*
2A Harrison*
3A Hinds*
3A Holmes
3A Humphreys
3A Issaquena
3A Itawamba
2A Jackson*
3A Jasper
3A Jefferson*
3A Jefferson Davis*
3A Jones*
3A Kemper
3A Lafayette
3A Lamar*
3A Lauderdale
3A Lawrence*
3A Leake
3A Lee
3A Leflore
3A Lincoln*
3A Lowndes
3A Madison
3A Marion*
3A Marshall
3A Monroe
3A Montgomery
3A Neshoba
3A Newton
3A Noxubee
3A Oktibbeha
3A Panola
2A Pearl River*
3A Perry*
3A Pike*

(continued)

TABLE N1101.7 (R301.1)—continued
CLIMATE ZONES, MOISTURE REGIMES, AND WARM-HUMID DESIGNATIONS BY STATE, COUNTY AND TERRITORY

3A Pontotoc
3A Prentiss
3A Quitman
3A Rankin*
3A Scott
3A Sharkey
3A Simpson*
3A Smith*
2A Stone*
3A Sunflower
3A Tallahatchie
3A Tate
3A Tippah
3A Tishomingo
3A Tunica
3A Union
3A Walthall*
3A Warren*
3A Washington
3A Wayne*
3A Webster
3A Wilkinson*
3A Winston
3A Yalobusha
3A Yazoo

MISSOURI

5A Adair
5A Andrew
5A Atchison
4A Audrain
4A Barry
4A Barton
4A Bates
4A Benton
4A Bollinger
4A Boone
5A Buchanan
4A Butler
5A Caldwell
4A Callaway
4A Camden
4A Cape Girardeau
4A Carroll
4A Carter
4A Cass
4A Cedar
5A Chariton
4A Christian
5A Clark
4A Clay
5A Clinton
4A Cole
4A Cooper
4A Crawford
4A Dade
4A Dallas
5A Daviess
5A DeKalb
4A Dent
4A Douglas
4A Dunklin
4A Franklin
4A Gasconade
5A Gentry
4A Greene
5A Grundy
5A Harrison
4A Henry
4A Hickory
5A Holt
4A Howard
4A Howell
4A Iron
4A Jackson
4A Jasper
4A Jefferson
4A Johnson
5A Knox
4A Laclede
4A Lafayette
4A Lawrence
5A Lewis
4A Lincoln
5A Linn
5A Livingston
5A Macon
4A Madison
4A Maries
5A Marion
4A McDonald
5A Mercer
4A Miller
4A Mississippi
4A Moniteau
4A Monroe
4A Montgomery
4A Morgan
4A New Madrid
4A Newton
5A Nodaway
4A Oregon
4A Osage
4A Ozark
4A Pemiscot
4A Perry
4A Pettis
4A Phelps
5A Pike
4A Platte
4A Polk
4A Pulaski
5A Putnam
5A Ralls
4A Randolph
4A Ray
4A Reynolds
4A Ripley
4A Saline
5A Schuyler
5A Scotland
4A Scott
4A Shannon
5A Shelby
4A St. Charles
4A St. Clair
4A Ste. Genevieve
4A St. Francois
4A St. Louis
4A St. Louis (city)
4A Stoddard
4A Stone
5A Sullivan
4A Taney
4A Texas
4A Vernon
4A Warren
4A Washington
4A Wayne
4A Webster
5A Worth
4A Wright

MONTANA

6B (all)

NEBRASKA

5A (all)

NEVADA

5B Carson City (city)
5B Churchill
3B Clark
5B Douglas
5B Elko
5B Esmeralda
5B Eureka
5B Humboldt
5B Lander
5B Lincoln
5B Lyon
5B Mineral
5B Nye
5B Pershing
5B Storey
5B Washoe
5B White Pine

NEW HAMPSHIRE

6A Belknap
6A Carroll
5A Cheshire
6A Coos
6A Grafton
5A Hillsborough
6A Merrimack
5A Rockingham
5A Strafford
6A Sullivan

NEW JERSEY

4A Atlantic
5A Bergen
4A Burlington
4A Camden
4A Cape May
4A Cumberland
4A Essex
4A Gloucester
4A Hudson
5A Hunterdon
5A Mercer
4A Middlesex
4A Monmouth
5A Morris
4A Ocean
5A Passaic
4A Salem
5A Somerset
5A Sussex
4A Union
5A Warren

NEW MEXICO

4B Bernalillo
5B Catron
3B Chaves
4B Cibola
5B Colfax
4B Curry
4B DeBaca
3B Dona Ana
3B Eddy
4B Grant
4B Guadalupe
5B Harding
3B Hidalgo
3B Lea
4B Lincoln
5B Los Alamos
3B Luna
5B McKinley
5B Mora
3B Otero
4B Quay
5B Rio Arriba
4B Roosevelt
5B Sandoval
5B San Juan
5B San Miguel
5B Santa Fe
4B Sierra
4B Socorro

(continued)

TABLE N1101.7 (R301.1)—continued
CLIMATE ZONES, MOISTURE REGIMES, AND WARM-HUMID DESIGNATIONS BY STATE, COUNTY AND TERRITORY

5B Taos
5B Torrance
4B Union
4B Valencia

NEW YORK

5A Albany
6A Allegany
4A Bronx
6A Broome
6A Cattaraugus
5A Cayuga
5A Chautauqua
5A Chemung
6A Chenango
6A Clinton
5A Columbia
5A Cortland
6A Delaware
5A Dutchess
5A Erie
6A Essex
6A Franklin
6A Fulton
5A Genesee
5A Greene
6A Hamilton
6A Herkimer
6A Jefferson
4A Kings
6A Lewis
5A Livingston
6A Madison
5A Monroe
6A Montgomery
4A Nassau
4A New York
5A Niagara
6A Oneida
5A Onondaga
5A Ontario
5A Orange
5A Orleans
5A Oswego
6A Otsego
5A Putnam
4A Queens
5A Rensselaer
4A Richmond
5A Rockland
5A Saratoga
5A Schenectady
6A Schoharie
6A Schuyler
5A Seneca
6A Steuben
6A St. Lawrence
4A Suffolk
6A Sullivan
5A Tioga
6A Tompkins
6A Ulster
6A Warren
5A Washington
5A Wayne
4A Westchester
6A Wyoming
5A Yates

NORTH CAROLINA

4A Alamance
4A Alexander
5A Alleghany
3A Anson
5A Ashe
5A Avery
3A Beaufort
4A Bertie
3A Bladen
3A Brunswick*
4A Buncombe
4A Burke
3A Cabarrus
4A Caldwell
3A Camden
3A Carteret*
4A Caswell
4A Catawba
4A Chatham
4A Cherokee
3A Chowan
4A Clay
4A Cleveland
3A Columbus*
3A Craven
3A Cumberland
3A Currituck
3A Dare
3A Davidson
4A Davie
3A Duplin
4A Durham
3A Edgecombe
4A Forsyth
4A Franklin
3A Gaston
4A Gates
4A Graham
4A Granville
3A Greene
4A Guilford
4A Halifax
4A Harnett
4A Haywood
4A Henderson
4A Hertford
3A Hoke
3A Hyde
4A Iredell
4A Jackson
3A Johnston
3A Jones
4A Lee
3A Lenoir
4A Lincoln
4A Macon
4A Madison
3A Martin
4A McDowell
3A Mecklenburg
5A Mitchell
3A Montgomery
3A Moore
4A Nash
3A New Hanover*
4A Northampton
3A Onslow*
4A Orange
3A Pamlico
3A Pasquotank
3A Pender*
3A Perquimans
4A Person
3A Pitt
4A Polk
3A Randolph
3A Richmond
3A Robeson
4A Rockingham
3A Rowan
4A Rutherford
3A Sampson
3A Scotland
3A Stanly
4A Stokes
4A Surry
4A Swain
4A Transylvania
3A Tyrrell
3A Union
4A Vance
4A Wake
4A Warren
3A Washington
5A Watauga
3A Wayne
4A Wilkes
3A Wilson
4A Yadkin
5A Yancey

NORTH DAKOTA

6A Adams
7 Barnes
7 Benson
6A Billings
7 Bottineau
6A Bowman
7 Burke
6A Burleigh
7 Cass
7 Cavalier
6A Dickey
7 Divide
6A Dunn
7 Eddy
6A Emmons
7 Foster
6A Golden Valley
7 Grand Forks
6A Grant
7 Griggs
6A Hettinger
7 Kidder
6A LaMoure
6A Logan
7 McHenry
6A McIntosh
6A McKenzie
7 McLean
6A Mercer
6A Morton
7 Mountrail
7 Nelson
6A Oliver
7 Pembina
7 Pierce
7 Ramsey
6A Ransom
7 Renville
6A Richland
7 Rolette
6A Sargent
7 Sheridan
6A Sioux
6A Slope
6A Stark
7 Steele
7 Stutsman
7 Towner
7 Traill
7 Walsh
7 Ward
7 Wells
7 Williams

OHIO

4A Adams
5A Allen

(continued)

2914

TABLE N1101.7 (R301.1)—continued
CLIMATE ZONES, MOISTURE REGIMES, AND WARM-HUMID DESIGNATIONS BY STATE, COUNTY AND TERRITORY

5A Ashland
5A Ashtabula
5A Athens
5A Auglaize
5A Belmont
4A Brown
5A Butler
5A Carroll
5A Champaign
5A Clark
4A Clermont
5A Clinton
5A Columbiana
5A Coshocton
5A Crawford
5A Cuyahoga
5A Darke
5A Defiance
5A Delaware
5A Erie
5A Fairfield
5A Fayette
5A Franklin
5A Fulton
4A Gallia
5A Geauga
5A Greene
5A Guernsey
4A Hamilton
5A Hancock
5A Hardin
5A Harrison
5A Henry
5A Highland
5A Hocking
5A Holmes
5A Huron
5A Jackson
5A Jefferson
5A Knox
5A Lake
4A Lawrence
5A Licking
5A Logan
5A Lorain
5A Lucas
5A Madison
5A Mahoning
5A Marion
5A Medina
5A Meigs
5A Mercer
5A Miami
5A Monroe
5A Montgomery
5A Morgan
5A Morrow
5A Muskingum
5A Noble
5A Ottawa
5A Paulding
5A Perry
5A Pickaway
4A Pike
5A Portage
5A Preble
5A Putnam
5A Richland
5A Ross
5A Sandusky
4A Scioto
5A Seneca
5A Shelby
5A Stark
5A Summit
5A Trumbull
5A Tuscarawas
5A Union
5A Van Wert
5A Vinton
5A Warren
4A Washington
5A Wayne
5A Williams
5A Wood
5A Wyandot

OKLAHOMA

3A Adair
3A Alfalfa
3A Atoka
4B Beaver
3A Beckham
3A Blaine
3A Bryan
3A Caddo
3A Canadian
3A Carter
3A Cherokee
3A Choctaw
4B Cimarron
3A Cleveland
3A Coal
3A Comanche
3A Cotton
3A Craig
3A Creek
3A Custer
3A Delaware
3A Dewey
3A Ellis
3A Garfield
3A Garvin
3A Grady
3A Grant
3A Greer
3A Harmon
3A Harper
3A Haskell
3A Hughes
3A Jackson
3A Jefferson
3A Johnston
3A Kay
3A Kingfisher
3A Kiowa
3A Latimer
3A Le Flore
3A Lincoln
3A Logan
3A Love
3A Major
3A Marshall
3A Mayes
3A McClain
3A McCurtain
3A McIntosh
3A Murray
3A Muskogee
3A Noble
3A Nowata
3A Okfuskee
3A Oklahoma
3A Okmulgee
3A Osage
3A Ottawa
3A Pawnee
3A Payne
3A Pittsburg
3A Pontotoc
3A Pottawatomie
3A Pushmataha
3A Roger Mills
3A Rogers
3A Seminole
3A Sequoyah
3A Stephens
4B Texas
3A Tillman
3A Tulsa
3A Wagoner
3A Washington
3A Washita
3A Woods
3A Woodward

OREGON

5B Baker
4C Benton
4C Clackamas
4C Clatsop
4C Columbia
4C Coos
5B Crook
4C Curry
5B Deschutes
4C Douglas
5B Gilliam
5B Grant
5B Harney
5B Hood River
4C Jackson
5B Jefferson
4C Josephine
5B Klamath
5B Lake
4C Lane
4C Lincoln
4C Linn
5B Malheur
4C Marion
5B Morrow
4C Multnomah
4C Polk
5B Sherman
4C Tillamook
5B Umatilla
5B Union
5B Wallowa
5B Wasco
4C Washington
5B Wheeler
4C Yamhill

PENNSYLVANIA

5A Adams
5A Allegheny
5A Armstrong
5A Beaver
5A Bedford
5A Berks
5A Blair
5A Bradford
4A Bucks
5A Butler
5A Cambria
6A Cameron
5A Carbon
5A Centre
4A Chester
5A Clarion
6A Clearfield
5A Clinton
5A Columbia
5A Crawford
5A Cumberland
5A Dauphin
4A Delaware
6A Elk
5A Erie
5A Fayette
5A Forest
5A Franklin
5A Fulton
5A Greene

(continued)

TABLE N1101.7 (R301.1)—continued
CLIMATE ZONES, MOISTURE REGIMES, AND WARM-HUMID DESIGNATIONS BY STATE, COUNTY AND TERRITORY

5A Huntingdon
5A Indiana
5A Jefferson
5A Juniata
5A Lackawanna
5A Lancaster
5A Lawrence
5A Lebanon
5A Lehigh
5A Luzerne
5A Lycoming
6A McKean
5A Mercer
5A Mifflin
5A Monroe
4A Montgomery
5A Montour
5A Northampton
5A Northumberland
5A Perry
4A Philadelphia
5A Pike
6A Potter
5A Schuylkill
5A Snyder
5A Somerset
5A Sullivan
6A Susquehanna
6A Tioga
5A Union
5A Venango
5A Warren
5A Washington
6A Wayne
5A Westmoreland
5A Wyoming
4A York

RHODE ISLAND

5A (all)

SOUTH CAROLINA

3A Abbeville
3A Aiken
3A Allendale*
3A Anderson
3A Bamberg*
3A Barnwell*
3A Beaufort*
3A Berkeley*
3A Calhoun
3A Charleston*
3A Cherokee
3A Chester
3A Chesterfield
3A Clarendon
3A Colleton*
3A Darlington
3A Dillon
3A Dorchester*
3A Edgefield
3A Fairfield
3A Florence
3A Georgetown*
3A Greenville
3A Greenwood
3A Hampton*
3A Horry*
3A Jasper*
3A Kershaw
3A Lancaster
3A Laurens
3A Lee
3A Lexington
3A Marion
3A Marlboro
3A McCormick
3A Newberry
3A Oconee
3A Orangeburg
3A Pickens
3A Richland
3A Saluda
3A Spartanburg
3A Sumter
3A Union
3A Williamsburg
3A York

SOUTH DAKOTA

6A Aurora
6A Beadle
5A Bennett
5A Bon Homme
6A Brookings
6A Brown
6A Brule
6A Buffalo
6A Butte
6A Campbell
5A Charles Mix
6A Clark
5A Clay
6A Codington
6A Corson
6A Custer
6A Davison
6A Day
6A Deuel
6A Dewey
5A Douglas
6A Edmunds
6A Fall River
6A Faulk
6A Grant
5A Gregory
6A Haakon
6A Hamlin
6A Hand
6A Hanson
6A Harding
6A Hughes
5A Hutchinson
6A Hyde
5A Jackson
6A Jerauld
6A Jones
6A Kingsbury
6A Lake
6A Lawrence
6A Lincoln
6A Lyman
6A Marshall
6A McCook
6A McPherson
6A Meade
5A Mellette
6A Miner
6A Minnehaha
6A Moody
6A Pennington
6A Perkins
6A Potter
6A Roberts
6A Sanborn
6A Shannon
6A Spink
6A Stanley
6A Sully
5A Todd
5A Tripp
6A Turner
5A Union
6A Walworth
5A Yankton
6A Ziebach

TENNESSEE

4A Anderson
4A Bedford
4A Benton
4A Bledsoe
4A Blount
4A Bradley
4A Campbell
4A Cannon
4A Carroll
4A Carter
4A Cheatham
3A Chester
4A Claiborne
4A Clay
4A Cocke
4A Coffee
3A Crockett
4A Cumberland
4A Davidson
4A Decatur
4A DeKalb
4A Dickson
3A Dyer
3A Fayette
4A Fentress
4A Franklin
4A Gibson
4A Giles
4A Grainger
4A Greene
4A Grundy
4A Hamblen
4A Hamilton
4A Hancock
3A Hardeman
3A Hardin
4A Hawkins
3A Haywood
3A Henderson
4A Henry
4A Hickman
4A Houston
4A Humphreys
4A Jackson
4A Jefferson
4A Johnson
4A Knox
3A Lake
3A Lauderdale
4A Lawrence
4A Lewis
4A Lincoln
4A Loudon
4A Macon
3A Madison
4A Marion
4A Marshall
4A Maury
4A McMinn
3A McNairy
4A Meigs
4A Monroe
4A Montgomery
4A Moore
4A Morgan
4A Obion
4A Overton
4A Perry
4A Pickett
4A Polk
4A Putnam
4A Rhea

(continued)

TABLE N1101.7 (R301.1)—continued
CLIMATE ZONES, MOISTURE REGIMES, AND WARM-HUMID DESIGNATIONS BY STATE, COUNTY AND TERRITORY

4A Roane
4A Robertson
4A Rutherford
4A Scott
4A Sequatchie
4A Sevier
3A Shelby
4A Smith
4A Stewart
4A Sullivan
4A Sumner
3A Tipton
4A Trousdale
4A Unicoi
4A Union
4A Van Buren
4A Warren
4A Washington
4A Wayne
4A Weakley
4A White
4A Williamson
4A Wilson

TEXAS

2A Anderson*
3B Andrews
2A Angelina*
2A Aransas*
3A Archer
4B Armstrong
2A Atascosa*
2A Austin*
4B Bailey
2B Bandera
2A Bastrop*
3B Baylor
2A Bee*
2A Bell*
2A Bexar*
3A Blanco*
3B Borden
2A Bosque*
3A Bowie*
2A Brazoria*
2A Brazos*
3B Brewster
4B Briscoe
2A Brooks*
3A Brown*
2A Burleson*
3A Burnet*
2A Caldwell*
2A Calhoun*
3B Callahan
2A Cameron*
3A Camp*
4B Carson
3A Cass*
4B Castro
2A Chambers*
2A Cherokee*
3B Childress
3A Clay
4B Cochran
3B Coke
3B Coleman
3A Collin*
3B Collingsworth
2A Colorado*
2A Comal*
3A Comanche*
3B Concho
3A Cooke
2A Coryell*
3B Cottle
3B Crane
3B Crockett
3B Crosby
3B Culberson
4B Dallam
3A Dallas*
3B Dawson
4B Deaf Smith
3A Delta
3A Denton*
2A DeWitt*
3B Dickens
2B Dimmit
4B Donley
2A Duval*
3A Eastland
3B Ector
2B Edwards
3A Ellis*
3B El Paso
3A Erath*
2A Falls*
3A Fannin
2A Fayette*
3B Fisher
4B Floyd
3B Foard
2A Fort Bend*
3A Franklin*
2A Freestone*
2B Frio
3B Gaines
2A Galveston*
3B Garza
3A Gillespie*
3B Glasscock
2A Goliad*
2A Gonzales*
4B Gray
3A Grayson
3A Gregg*
2A Grimes*
2A Guadalupe*
4B Hale
3B Hall
3A Hamilton*
4B Hansford
3B Hardeman
2A Hardin*
2A Harris*
3A Harrison*
4B Hartley
3B Haskell
2A Hays*
3B Hemphill
3A Henderson*
2A Hidalgo*
2A Hill*
4B Hockley
3A Hood*
3A Hopkins*
2A Houston*
3B Howard
3B Hudspeth
3A Hunt*
4B Hutchinson
3B Irion
3A Jack
2A Jackson*
2A Jasper*
3B Jeff Davis
2A Jefferson*
2A Jim Hogg*
2A Jim Wells*
3A Johnson*
3B Jones
2A Karnes*
3A Kaufman*
3A Kendall*
2A Kenedy*
3B Kent
3B Kerr
3B Kimble
3B King
2B Kinney
2A Kleberg*
3B Knox
3A Lamar*
4B Lamb
3A Lampasas*
2B La Salle
2A Lavaca*
2A Lee*
2A Leon*
2A Liberty*
2A Limestone*
4B Lipscomb
2A Live Oak*
3A Llano*
3B Loving
3B Lubbock
3B Lynn
2A Madison*
3A Marion*
3B Martin
3B Mason
2A Matagorda*
2B Maverick
3B McCulloch
2A McLennan*
2A McMullen*
2B Medina
3B Menard
3B Midland
2A Milam*
3A Mills*
3B Mitchell
3A Montague
2A Montgomery*
4B Moore
3A Morris*
3B Motley
3A Nacogdoches*
3A Navarro*
2A Newton*
3B Nolan
2A Nueces*
4B Ochiltree
4B Oldham
2A Orange*
3A Palo Pinto*
3A Panola*
3A Parker*
4B Parmer
3B Pecos
2A Polk*
4B Potter
3B Presidio
3A Rains*
4B Randall
3B Reagan
2B Real
3A Red River*
3B Reeves
2A Refugio*
4B Roberts
2A Robertson*
3A Rockwall*
3B Runnels
3A Rusk*
3A Sabine*
3A San Augustine*
2A San Jacinto*
2A San Patricio*

(continued)

TABLE N1101.7 (R301.1)—continued
CLIMATE ZONES, MOISTURE REGIMES, AND WARM-HUMID DESIGNATIONS BY STATE, COUNTY AND TERRITORY

3A San Saba*
3B Schleicher
3B Scurry
3B Shackelford
3A Shelby*
4B Sherman
3A Smith*
3A Somervell*
2A Starr*
3A Stephens
3B Sterling
3B Stonewall
3B Sutton
4B Swisher
3A Tarrant*
3B Taylor
3B Terrell
3B Terry
3B Throckmorton
3A Titus*
3B Tom Green
2A Travis*
2A Trinity*
2A Tyler*
3A Upshur*
3B Upton
2B Uvalde
2B Val Verde
3A Van Zandt*
2A Victoria*
2A Walker*
2A Waller*
3B Ward
2A Washington*
2B Webb
2A Wharton*
3B Wheeler
3A Wichita
3B Wilbarger
2A Willacy*
2A Williamson*
2A Wilson*
3B Winkler
3A Wise
3A Wood*
4B Yoakum
3A Young
2B Zapata
2B Zavala

UTAH

5B Beaver
6B Box Elder
6B Cache
6B Carbon
6B Daggett
5B Davis
6B Duchesne
5B Emery
5B Garfield
5B Grand
5B Iron
5B Juab
5B Kane
5B Millard
6B Morgan
5B Piute
6B Rich
5B Salt Lake
5B San Juan
5B Sanpete
5B Sevier
6B Summit
5B Tooele
6B Uintah
5B Utah
6B Wasatch
3B Washington
5B Wayne
5B Weber

VERMONT

6A (all)

VIRGINIA

4A (all)

WASHINGTON

5B Adams
5B Asotin
5B Benton
5B Chelan
4C Clallam
4C Clark
5B Columbia
4C Cowlitz
5B Douglas
6B Ferry
5B Franklin
5B Garfield
5B Grant
4C Grays Harbor
4C Island
4C Jefferson
4C King
4C Kitsap
5B Kittitas
5B Klickitat
4C Lewis
5B Lincoln
4C Mason
6B Okanogan
4C Pacific
6B Pend Oreille
4C Pierce
4C San Juan
4C Skagit
5B Skamania
4C Snohomish
5B Spokane
6B Stevens
4C Thurston
4C Wahkiakum
5B Walla Walla
4C Whatcom
5B Whitman
5B Yakima

WEST VIRGINIA

5A Barbour
4A Berkeley
4A Boone
4A Braxton
5A Brooke
4A Cabell
4A Calhoun
4A Clay
5A Doddridge
5A Fayette
4A Gilmer
5A Grant
5A Greenbrier
5A Hampshire
5A Hancock
5A Hardy
5A Harrison
4A Jackson
4A Jefferson
4A Kanawha
5A Lewis
4A Lincoln
4A Logan
5A Marion
5A Marshall
4A Mason
4A McDowell
4A Mercer
5A Mineral
4A Mingo
5A Monongalia
4A Monroe
4A Morgan
5A Nicholas
5A Ohio
5A Pendleton
4A Pleasants
5A Pocahontas
5A Preston
4A Putnam
5A Raleigh
5A Randolph
4A Ritchie
4A Roane
5A Summers
5A Taylor
5A Tucker
4A Tyler
5A Upshur
4A Wayne
5A Webster
5A Wetzel
4A Wirt
4A Wood
4A Wyoming

WISCONSIN

6A Adams
7 Ashland
6A Barron
7 Bayfield
6A Brown
6A Buffalo
7 Burnett
6A Calumet
6A Chippewa
6A Clark
6A Columbia
6A Crawford
6A Dane
6A Dodge
6A Door
7 Douglas
6A Dunn
6A Eau Claire
7 Florence
6A Fond du Lac
7 Forest
6A Grant
6A Green
6A Green Lake
6A Iowa
7 Iron
6A Jackson
6A Jefferson
6A Juneau
6A Kenosha
6A Kewaunee
6A La Crosse
6A Lafayette
7 Langlade
7 Lincoln
6A Manitowoc
6A Marathon
6A Marinette
6A Marquette
6A Menominee
6A Milwaukee
6A Monroe
6A Oconto
7 Oneida
6A Outagamie

(continued)

2918

TABLE N1101.7 (R301.1)—continued
CLIMATE ZONES, MOISTURE REGIMES, AND WARM-HUMID DESIGNATIONS BY STATE, COUNTY AND TERRITORY

6A Ozaukee
6A Pepin
6A Pierce
6A Polk
6A Portage
7 Price
6A Racine
6A Richland
6A Rock
6A Rusk
6A Sauk
7 Sawyer
6A Shawano
6A Sheboygan
6A St. Croix
7 Taylor
6A Trempealeau
6A Vernon
7 Vilas
6A Walworth
7 Washburn
6A Washington
6A Waukesha
6A Waupaca
6A Waushara
6A Winnebago
6A Wood

WYOMING

6B Albany
6B Big Horn
6B Campbell
6B Carbon
6B Converse
6B Crook
6B Fremont
5B Goshen
6B Hot Springs
6B Johnson
6B Laramie
7 Lincoln
6B Natrona
6B Niobrara
6B Park
5B Platte
6B Sheridan
7 Sublette
6B Sweetwater
7 Teton
6B Uinta
6B Washakie
6B Weston

US TERRITORIES

AMERICAN SAMOA

1A (all)*

GUAM

1A (all)*

NORTHERN MARIANA ISLANDS

1A (all)*

PUERTO RICO

1A (all)*

VIRGIN ISLANDS

1A (all)*

TABLE N1101.7.2(1) [R302.3(1)]
INTERNATIONAL CLIMATE ZONE DEFINITIONS

MAJOR CLIMATE TYPE DEFINITIONS
Marine (C) Definition—Locations meeting all four criteria: 1. Mean temperature of coldest month between -3°C (27°F) and 18°C (65°F). 2. Warmest month mean < 22°C (72°F). 3. At least four months with mean temperatures over 10°C (50°F). 4. Dry season in summer. The month with the heaviest precipitation in the cold season has at least three times as much precipitation as the month with the least precipitation in the rest of the year. The cold season is October through March in the Northern Hemisphere and April through September in the Southern Hemisphere.
Dry (B) Definition—Locations meeting the following criteria: Not marine and $P_{in} < 0.44 \times (TF - 19.5)$ [$P_{cm} < 2.0 \times (TC + 7)$ in SI units] where: P_{in} = Annual precipitation in inches (cm) T = Annual mean temperature in °F (°C)
Moist (A) Definition—Locations that are not marine and not dry.
Warm-humid Definition—Moist (A) locations where either of the following wet-bulb temperature conditions shall occur during the warmest six consecutive months of the year: 1. 67°F (19.4°C) or higher for 3,000 or more hours; or 2. 73°F (22.8°C) or higher for 1,500 or more hours.

For SI: °C = [(°F)-32]/1.8, 1 inch = 2.54 cm.

TABLE N1101.7.2(2) [R301.3(2)]
INTERNATIONAL CLIMATE ZONE DEFINITIONS

ZONE NUMBER	THERMAL CRITERIA	
	IP Units	SI Units
1	9000 < CDD50°F	5000 < CDD10°C
2	6300 < CDD50°F ≤ 9000	3500 < CDD10°C ≤ 5000
3A and 3B	4500 < CDD50°F ≤ 6300 AND HDD65°F ≤ 5400	2500 < CDD10°C ≤ 3500 AND HDD18°C ≤ 3000
4A and 4B	CDD50°F ≤ 4500 AND HDD65°F ≤ 5400	CDD10°C ≤ 2500 AND HDD18°C ≤ 3000
3C	HDD65°F ≤ 3600	HDD18°C ≤ 2000
4C	3600 < HDD65°F ≤ 5400	2000 < HDD18°C ≤ 3000
5	5400 < HDD65°F ≤ 7200	3000 < HDD18°C ≤ 4000
6	7200 < HDD65°F ≤ 9000	4000 < HDD18°C ≤ 5000
7	9000 < HDD65°F ≤ 12600	5000 < HDD18°C ≤ 7000
8	12600 < HDD65°F	7000 < HDD18°C

For SI: °C = [(°F)-32]/1.8.

N1101.9 (R302.1) Interior design conditions. The interior design temperatures used for heating and cooling load calculations shall be a maximum of 72°F (22°C) for heating and minimum of 75°F (24°C) for cooling.

N1101.10 (R303.1) Identification. Materials, systems and equipment shall be identified in a manner that will allow a determination of compliance with the applicable provisions of this code.

N1101.10.1 (R303.1.1) Building thermal envelope insulation. An *R*-value identification mark shall be applied by the manufacturer to each piece of *building thermal envelope* insulation 12 inches (305 mm) or greater in width. Alternately, the insulation installers shall provide a certification listing the type, manufacturer and *R*-value of insulation installed in each element of the *building thermal envelope*. For blown or sprayed insulation (fiberglass and cellulose), the initial installed thickness, settled thickness, settled *R*-value, installed density, coverage area and number of bags installed shall be *listed* on the certification. For insulated siding, the *R*-value shall be labeled on the product's package and shall be *listed* on the certification. The insulation installer shall sign, date and post the certification in a conspicuous location on the job site.

N1101.10.1.1 (R303.1.1.1) Blown or sprayed roof/ceiling insulation. The thickness of blown-in or sprayed roof/ceiling insulation (fiberglass or cellulose) shall be written in inches (mm) on markers that are installed at least one for every 300 square feet (28 m^2) throughout the attic space. The markers shall be affixed to the trusses or joists and marked with the minimum initial installed thickness with numbers not less than 1 inch (25 mm) in height. Each marker shall face the attic access opening. Spray polyurethane foam thickness and installed *R*-value shall be *listed* on certification provided by the insulation installer.

N1101.10.2 (R303.1.2) Insulation mark installation. Insulating materials shall be installed such that the manufacturer's *R*-value mark is readily observable upon inspection.

N1101.10.3 (R303.1.3) Fenestration product rating. *U*-factors of fenestration products (windows, doors and skylights) shall be determined in accordance with NFRC 100.

Exception: Where required, garage door *U*-factors shall be determined in accordance with either NFRC 100 or ANSI/DASMA 105.

U-factors shall be determined by an accredited, independent laboratory, and labeled and certified by the manufacturer.

Products lacking such a labeled U-factor shall be assigned a default *U*-factor from Table N1101.10.3(1) or N1101.10.3(2). The solar heat gain coefficient (SHGC) and visible transmittance (VT) of glazed fenestration products (windows, glazed doors and skylights) shall be determined in accordance with NFRC 200 by an accredited, independent laboratory, and labeled and certified by the manufacturer. Products lacking such a labeled SHGC or VT shall be assigned a default SHGC or VT from Table N1101.10.3(3).

TABLE N1101.10.3(1) [R303.1.3(1)]
DEFAULT GLAZED FENESTRATION *U*-FACTORS

FRAME TYPE	SINGLE PANE	DOUBLE PANE	SKYLIGHT	
			Single	Double
Metal	1.20	0.80	2.00	1.30
Metal with Thermal Break	1.10	0.65	1.90	1.10
Nonmetal or Metal Clad	0.95	0.55	1.75	1.05
Glazed Block	0.60			

TABLE N1101.10.3(2) [R303.1.3(2)]
DEFAULT DOOR *U*-FACTORS

DOOR TYPE	*U*-FACTOR
Uninsulated Metal	1.20
Insulated Metal	0.60
Wood	0.50
Insulated, nonmetal edge, max 45% glazing, any glazing double pane	0.35

TABLE N1101.10.3(3) [R303.1.3(3)]
DEFAULT GLAZED FENESTRATION SHGC AND VT

	SINGLE GLAZED		DOUBLE GLAZED		GLAZED BLOCK
	Clear	Tinted	Clear	Tinted	
SHGC	0.8	0.7	0.7	0.6	0.6
VT	0.6	0.3	0.6	0.3	0.6

N1101.10.4 (R303.1.4) Insulation product rating. The thermal resistance (*R*-value) of insulation shall be determined in accordance with the U.S. Federal Trade Commission *R*-value rule (CFR Title 16, Part 460) in units of h × ft^2 × °F/Btu at a mean temperature of 75°F (24°C).

N1101.10.4.1 (R303.1.4.1) Insulated siding. The thermal resistance (*R*-value) of insulated siding shall be determined in accordance with ASTM C 1363. Installation for testing shall be in accordance with the manufacturer's installation instructions.

N1101.11 (R303.2) Installation. All materials, systems and equipment shall be installed in accordance with the manufacturer's instructions and this code.

N1101.11.1 (R303.2.1) Protection of exposed foundation insulation. Insulation applied to the exterior of basement walls, crawlspace walls and the perimeter of slab-on-grade floors shall have a rigid, opaque and weather-resistant protective covering to prevent the degradation of the insulation's thermal performance. The protective covering shall cover the exposed exterior insulation and extend not less than 6 inches (153 mm) below grade.

N1101.12 (R303.3) Maintenance information. Maintenance instructions shall be furnished for equipment and systems that require preventive maintenance. Required regular maintenance actions shall be clearly stated and incorporated on a readily accessible label. The label shall include the title or publication number for the operation and maintenance manual for that particular model and type of product.

N1101.13 (R401.2) Compliance. Projects shall comply with one of the following:

1. Sections N1101.14 through N1104.
2. Section N1105 and the provisions of Sections N1101.14 through N1104 labeled "Mandatory."
3. An energy rating index (ERI) approach in Section N1106.

N1101.13.1 (R401.2.1) Tropical zone. *Residential buildings* in the tropical zone at elevations below 2,400 feet (731.5 m) above sea level shall be deemed to comply with this chapter where the following conditions are met:

1. Not more than one-half of the *occupied* space is air conditioned.
2. The *occupied* space is not heated.
3. Solar, wind or other renewable energy source supplies not less than 80 percent of the energy for service water heating.
4. Glazing in *conditioned* space has a *solar heat gain coefficient* of less than or equal to 0.40, or has an overhang with a projection factor equal to or greater than 0.30.
5. Permanently installed lighting is in accordance with Section N1104.
6. The exterior roof surface complies with one of the options in Table C402.2.1.1 of the *International Energy Conservation Code*, or the roof/ceiling has insulation with an *R*-value of R-15 or greater. If present, attics above the insulation are vented and attics below the insulation are unvented.
7. Roof surfaces have a minimum slope of $^1/_4$ inch (6.4 mm) per foot of run. The finished roof does not have water accumulation areas.
8. Operable fenestration provides ventilation area equal to not less than 14 percent of the floor area in each room. Alternatively, equivalent ventilation is provided by a ventilation fan.
9. Bedrooms with exterior walls facing two different directions have operable fenestration or exterior walls facing two directions.
10. Interior doors to bedrooms are capable of being secured in the open position.
11. A ceiling fan or ceiling fan rough-in is provided for bedrooms and the largest space that is not used as a bedroom.

N1101.14 (R401.3) Certificate (Mandatory). A permanent certificate shall be completed by the builder or registered design professional and posted on a wall in the space where the furnace is located, a utility room or an approved location inside the building. Where located on an electrical panel, the certificate shall not cover or obstruct the visibility of the circuit directory label, service disconnect label or other required labels. The certificate shall list the predominant *R*-values of insulation installed in or on ceiling/roof, walls, foundation (slab, *basement wall,* crawl space wall and/or floor) and ducts outside conditioned spaces; *U*-factors for fenestration and the solar heat gain coefficient (SHGC) of fenestration, and the results from any required duct system and building envelope air leakage testing done on the building. Where there is more than one value for each component, the certificate shall list the value covering the largest area. The certificate shall list the types and efficiencies of heating, cooling and service water heating equipment. Where a gas-fired unvented room heater, electric furnace, or baseboard electric heater is installed in the residence, the certificate shall list "gas-fired unvented room heater," "electric furnace" or "baseboard electric heater," as appropriate. An efficiency shall not be *listed* for gas-fired unvented room heaters, electric furnaces or electric baseboard heaters.

SECTION N1102 (R402)
BUILDING THERMAL ENVELOPE

N1102.1 (R402.1) General (Prescriptive). The *building thermal envelope* shall meet the requirements of Sections N1102.1.1 through N1102.1.4.

Exception: The following low energy buildings, or portions thereof, separated from the remainder of the building by *building thermal envelope* assemblies complying with this section shall be exempt from the *building thermal envelope* provisions of Section N1102.

1. Those with a peak design rate of energy usage less than 3.4 Btu/h · ft^2 (10.7 W/m^2) or 1.0 watt/ft^2 of floor area for space conditioning purposes.
2. Those that do not contain *conditioned space*.

N1102.1.1 (R402.1.1) Vapor retarder. Wall assemblies in the *building thermal envelope* shall comply with the vapor retarder requirements of Section R702.7.

N1102.1.2 (R402.1.2) Insulation and fenestration criteria. The *building thermal envelope* shall meet the requirements of Table N1102.1.2 based on the climate zone specified in Section N1101.7.

N1102.1.3 (R402.1.3) *R*-value computation. Insulation material used in layers, such as framing cavity insulation, or continuous insulation shall be summed to compute the corresponding component *R*-value. The manufacturer's settled *R*-value shall be used for blown insulation. Computed *R*-values shall not include an *R*-value for other building materials or air films. Where insulated siding is used for the purpose of complying with the continuous insulation requirements of Table N1102.1.2, the manufac-

TABLE N1102.1.2 (R402.1.2)
INSULATION AND FENESTRATION REQUIREMENTS BY COMPONENT[a]

CLIMATE ZONE	FENESTRATION *U*-FACTOR[b]	SKYLIGHT[b] *U*-FACTOR	GLAZED FENESTRATION SHGC[b, e]	CEILING *R*-VALUE	WOOD FRAME WALL *R*-VALUE	MASS WALL *R*-VALUE[i]	FLOOR *R*-VALUE	BASEMENT[c] WALL *R*-VALUE	SLAB[d] *R*-VALUE & DEPTH	CRAWL SPACE[c] WALL *R*-VALUE
1	NR	0.75	0.25	30	13	3/4	13	0	0	0
2	0.40	0.65	0.25	38	13	4/6	13	0	0	0
3	0.35	0.55	0.25	38	20 or 13 + 5[h]	8/13	19	5/13[f]	0	5/13
4 except Marine	0.35	0.55	0.40	49	20 or 13 + 5[h]	8/13	19	10 /13	10, 2 ft	10/13
5 and Marine 4	0.32	0.55	NR	49	20 or 13 + 5[h]	13/17	30[g]	15/19	10, 2 ft	15/19
6	0.32	0.55	NR	49	20 + 5 or 13 + 10[h]	15/20	30[g]	15/19	10, 4 ft	15/19
7 and 8	0.32	0.55	NR	49	20 + 5 or 13 + 10[h]	19/21	38[g]	15/19	10, 4 ft	15/19

For SI: 1 foot = 304.8 mm.

a. *R*-values are minimums. *U*-factors and SHGC are maximums. When insulation is installed in a cavity which is less than the label or design thickness of the insulation, the installed *R*-value of the insulation shall not be less than the *R*-value specified in the table.

b. The fenestration *U*-factor column excludes skylights. The SHGC column applies to all glazed fenestration.
Exception: Skylights may be excluded from glazed fenestration SHGC requirements in Climate Zones 1 through 3 where the SHGC for such skylights does not exceed 0.30.

c. "15/19" means R-15 continuous insulation on the interior or exterior of the home or R-19 cavity insulation at the interior of the basement wall. "15/19" shall be permitted to be met with R-13 cavity insulation on the interior of the basement wall plus R-5 continuous insulation on the interior or exterior of the home. "10/13" means R-10 continuous insulation on the interior or exterior of the home or R-13 cavity insulation at the interior of the basement wall.

d. R-5 shall be added to the required slab edge *R*-values for heated slabs. Insulation depth shall be the depth of the footing or 2 feet, whichever is less in Zones 1 through 3 for heated slabs.

e. There are no SHGC requirements in the Marine Zone.

f. Basement wall insulation is not required in warm-humid locations as defined by Figure N1101.10 and Table N1101.10.

g. Or insulation sufficient to fill the framing cavity, R-19 minimum.

h. The first value is cavity insulation, the second value is continuous insulation, so "13+5" means R-13 cavity insulation plus R-5 continuous insulation.

i. The second *R*-value applies when more than half the insulation is on the interior of the mass wall.

TABLE N1102.1.4 (R402.1.4)
EQUIVALENT *U*-FACTORS[a]

CLIMATE ZONE	FENESTRATION *U*-FACTOR	SKYLIGHT *U*-FACTOR	CEILING *U*-FACTOR	FRAME WALL *U*-FACTOR	MASS WALL *U*-FACTOR[b]	FLOOR *U*-FACTOR	BASEMENT WALL *U*-FACTOR	CRAWL SPACE WALL *U*-FACTOR
1	0.50	0.75	0.035	0.084	0.197	0.064	0.360	0.477
2	0.40	0.65	0.030	0.084	0.165	0.064	0.360	0.477
3	0.35	0.55	0.030	0.060	0.098	0.047	0.091[c]	0.136
4 except Marine	0.35	0.55	0.026	0.060	0.098	0.047	0.059	0.065
5 and Marine 4	0.32	0.55	0.026	0.060	0.082	0.033	0.050	0.055
6	0.32	0.55	0.026	0.045	0.060	0.033	0.050	0.055
7 and 8	0.32	0.55	0.026	0.045	0.057	0.028	0.050	0.055

a. Nonfenestration *U*-factors shall be obtained from measurement, calculation or an approved source.

b. When more than half the insulation is on the interior, the mass wall *U*-factors shall be a maximum of 0.17 in Zone 1, 0.14 in Zone 2, 0.12 in Zone 3, 0.087 in Zone 4 except Marine, 0.065 in Zone 5 and Marine 4, and 0.057 in Zones 6 through 8.

c. Basement wall *U*-factor of 0.360 in warm-humid locations as defined by Figure N1101.10 (R301.1) and Table N1101.10 (R301.1).

turer's labeled *R*-Value for insulated siding shall be reduced by R-0.6.

N1102.1.4 (R402.1.4) *U*-factor alternative. An assembly with a *U*-factor equal to or less than that specified in Table N1102.1.4 shall be permitted as an alternative to the *R*-value in Table N1102.1.2.

N1102.1.5 (R402.1.5) Total UA alternative. If the total *building thermal envelope* UA (sum of *U*-factor times assembly area) is less than or equal to the total UA resulting from using the *U*-factors in Table N1102.1.4 (multiplied by the same assembly area as in the proposed building), the building shall be considered in compliance with Table N1102.1.2. The UA calculation shall be done using a method consistent with the ASHRAE *Handbook of Fundamentals* and shall include the thermal bridging effects of framing materials. The SHGC requirements shall be met in addition to UA compliance.

N1102.2 (R402.2) Specific insulation requirements (Prescriptive). In addition to the requirements of Section N1102.1, insulation shall meet the specific requirements of Sections N1102.2.1 through N1102.2.13.

N1102.2.1 (R402.2.1) Ceilings with attic spaces. Where Section R1102.1.2 would require R-38 insulation in the ceiling, installing R-30 over 100 percent of the ceiling area requiring insulation shall be deemed to satisfy the requirement for R-38 wherever the full height of uncompressed R-30 insulation extends over the wall top plate at the eaves. Similarly, where Section R1102.1.2 would require R-49 insulation in the ceiling, installing R-38 over 100 percent of the ceiling area requiring insulation shall be deemed to satisfy the requirement for R-49 insulation wherever the full height of uncompressed R-38 insulation extends over the wall top plate at the eaves. This reduction shall not apply to the *U*-factor alternative approach in Section R1102.1.4 and the total UA alternative in Section R1102.1.5.

N1102.2.2 (R402.2.2) Ceilings without attic spaces. Where Section N1102.1.2 would require insulation levels above R-30 and the design of the roof/ceiling assembly does not allow sufficient space for the required insulation, the minimum required insulation for such roof/ceiling assemblies shall be R-30. This reduction of insulation from the requirements of Section N1102.1.2 shall be limited to 500 square feet (46 m^2) or 20 percent of the total insulated ceiling area, whichever is less. This reduction shall not apply to the *U*-factor alternative approach in Section N1102.1.4 and the total UA alternative in Section N1102.1.5.

N1102.2.3 (R402.2.3) Eave baffle. For air-permeable insulations in vented attics, a baffle shall be installed adjacent to soffit and eave vents. Baffles shall maintain an opening equal or greater than the size of the vent. The baffle shall extend over the top of the attic insulation. The baffle shall be permitted to be any solid material.

N1102.2.4 (R402.2.4) Access hatches and doors. Access doors from conditioned spaces to unconditioned spaces such as attics and crawl spaces shall be weatherstripped and insulated to a level equivalent to the insulation on the surrounding surfaces. Access shall be provided to all equipment that prevents damaging or compressing the insulation. A wood-framed or equivalent baffle or retainer is required to be provided when loose-fill insulation is installed, the purpose of which is to prevent the loose-fill insulation from spilling into the living space when the attic access is opened, and to provide a permanent means of maintaining the installed *R*-value of the loose-fill insulation.

Exception: Vertical doors that provide access from conditioned to unconditioned spaces shall be permitted to meet the fenestration requirements of Table R1102.1.2 based on the applicable climate zone specified in Chapter 3.

N1102.2.5 (R402.2.5) Mass walls. Mass walls for the purposes of this chapter shall be considered above-grade walls of concrete block, concrete, insulated concrete form (ICF), masonry cavity, brick (other than brick veneer), earth (adobe, compressed earth block, rammed earth) and solid timber/logs, or any other walls having a heat capacity greater than or equal to 6 Btu/ft^2 × °F (123 kJ/m^2 × K).

N1102.2.6 (R402.2.6) Steel-frame ceilings, walls, and floors. Steel-frame ceilings, walls, and floors shall meet the insulation requirements of Table N1102.2.6 or shall meet the *U*-factor requirements of Table N1102.1.4. The calculation of the *U*-factor for a steel-frame envelope assembly shall use a series-parallel path calculation method.

N1102.2.7 (R402.2.7) Walls with partial structural sheathing. Where Section R1102.1.2 would require continuous insulation on exterior walls and structural sheathing covers 40 percent or less of the gross area of all exterior walls, the continuous insulation *R*-value shall be permitted to be reduced by an amount necessary to result in a consistent total sheathing thickness, but not more than R-3, on areas of the walls covered by structural sheathing. This reduction shall not apply to the *U*-factor alternative approach in Section R1102.1.4 and the total UA alternative in Section R1102.1.5.

N1102.2.8 (R402.2.8) Floors. Floor framing-cavity insulation shall be installed to maintain permanent contact with the underside of the subfloor decking.

Exception: The floor framing-cavity insulation shall be permitted to be in contact with the topside of sheathing or continuous insulation installed on the bottom side of floor framing where combined with insulation that meets or exceeds the minimum wood frame wall *R*-value in Table 1102.1.2 and that extends from the bottom to the top of all perimeter floor framing members.

N1102.2.9 (R402.2.9) Basement walls. Walls associated with conditioned basements shall be insulated from the top of the *basement wall* down to 10 feet (3048 mm) below grade or to the basement floor, whichever is less. Walls

associated with unconditioned basements shall meet this requirement unless the floor overhead is insulated in accordance with Sections N1102.1.2 and N1102.2.8.

TABLE N1102.2.6 (R402.2.6)
STEEL-FRAME CEILING, WALL AND FLOOR INSULATION (*R*-VALUE)

WOOD FRAME *R*-VALUE REQUIREMENT	COLD-FORMED STEEL EQUIVALENT *R*-VALUE[a]
Steel Truss Ceilings[b]	
R-30	R-38 or R-30 + 3 or R-26 + 5
R-38	R-49 or R-38 + 3
R-49	R-38 + 5
Steel Joist Ceilings[b]	
R-30	R-38 in 2 × 4 or 2 × 6 or 2 × 8 R-49 in any framing
R-38	R-49 in 2 × 4 or 2 × 6 or 2 × 8 or 2 × 10
Steel-Framed Wall, 16″ on center	
R-13	R-13 + 4.2 or R-19 + 2.1 or R-21 + 2.8 or R-0 + 9.3 or R-15 + 3.8 or R-21 + 3.1
R-13 + 3	R-0 + 11.2 or R-13 + 6.1 or R-15 + 5.7 or R-19 + 5.0 or R-21 + 4.7
R-20	R-0 + 14.0 or R-13 + 8.9 or R-15 + 8.5 or R-19 + 7.8 or R-19 + 6.2 or R-21 + 7.5
R-20 + 5	R-13 + 12.7 or R-15 + 12.3 or R-19 + 11.6 or R-21 + 11.3 or R-25 + 10.9
R-21	R-0 + 14.6 or R-13 + 9.5 or R-15 + 9.1 or R-19 + 8.4 or R-21 + 8.1 or R-25 + 7.7
Steel-Framed Wall, 24″ on center	
R-13	R-0 + 9.3 or R-13 + 3.0 or R-15 + 2.4
R-13 + 3	R-0 + 11.2 or R-13 + 4.9 or R-15 + 4.3 or R-19 + 3.5 or R-21 + 3.1
R-20	R-0 + 14.0 or R-13 + 7.7 or R-15 + 7.1 or R-19 + 6.3 or R-21 + 5.9
R-20 + 5	R-13 + 11.5 or R-15 + 10.9 or R-19 + 10.1 or R-21 + 9.7 or R-25 + 9.1
R-21	R-0 + 14.6 or R-13 + 8.3 or R-15 + 7.7 or R-19 + 6.9 or R-21 + 6.5 or R-25 + 5.9
Steel Joist Floor	
R-13	R-19 in 2 × 6, or R-19 + 6 in 2 × 8 or 2 × 10
R-19	R-19 + 6 in 2 × 6, or R-19 + 12 in 2 × 8 or 2 × 10

a. Cavity insulation *R*-value is listed first, followed by continuous insulation *R*-value.
b. Insulation exceeding the height of the framing shall cover the framing.

N1102.2.10 (R402.2.10) Slab-on-grade floors. Slab-on-grade floors with a floor surface less than 12 inches (305 mm) below grade shall be insulated in accordance with Table N1102.1.2. The insulation shall extend downward from the top of the slab on the outside or inside of the foundation wall. Insulation located below grade shall be extended the distance provided in Table N1102.1.2 by any combination of vertical insulation, insulation extending under the slab or insulation extending out from the building. Insulation extending away from the building shall be protected by pavement or by not less than 10 inches (254 mm) of soil. The top edge of the insulation installed between the *exterior wall* and the edge of the interior slab shall be permitted to be cut at a 45-degree (0.79 rad) angle away from the *exterior wall.* Slab-edge insulation is not required in jurisdictions designated by the *building official* as having a very heavy termite infestation.

N1102.2.11 (R402.2.11) Crawl space walls. As an alternative to insulating floors over crawl spaces, crawl space walls shall be permitted to be insulated when the crawl space is not vented to the outside. Crawl space wall insulation shall be permanently fastened to the wall and extend downward from the floor to the finished grade level and then vertically and/or horizontally for at least an additional 24 inches (610 mm). Exposed earth in unvented crawl space foundations shall be covered with a continuous Class I vapor retarder in accordance with this code. All joints of the vapor retarder shall overlap by 6 inches (153 mm) and be sealed or taped. The edges of the vapor retarder shall extend not less than 6 inches (153 mm) up the stem wall and shall be attached to the stem wall.

N1102.2.12 (R402.2.12) Masonry veneer. Insulation shall not be required on the horizontal portion of the foundation that supports a masonry veneer.

N1102.2.13 (R402.2.13) Sunroom insulation. *Sunrooms* enclosing conditioned spaces shall meet the insulation requirements of this code.

Exception: For *sunrooms* with *thermal isolation*, and enclosing conditioned spaces, the following exceptions to the insulation *requirements* of this code shall apply:

1. The minimum ceiling insulation *R*-values shall be R-19 in Zones 1 through 4 and R-24 in Zones 5 through 8.
2. The minimum wall *R*-value shall be R-13 in all *climate zones*. Walls separating a *sunroom* with a *thermal isolation* from *conditioned space* shall meet the *building thermal envelope* requirements of this code.

N1102.3 (R402.3) Fenestration (Prescriptive). In addition to the requirements of Section N1102, fenestration shall comply with Sections N1102.3.1 through N1102.4.5.

N1102.3.1 (R402.3.1) *U*-factor. An area-weighted average of fenestration products shall be permitted to satisfy the *U*-factor requirements.

N1102.3.2 (R402.3.2) Glazed fenestration SHGC. An area-weighted average of fenestration products more than 50-percent glazed shall be permitted to satisfy the SHGC requirements.

Dynamic glazing shall be permitted to satisfy the SHGC requirements of Table R1102.1.2 provided the ratio of the higher to lower labeled SHGC is greater than or equal to 2.4, and the *dynamic glazing* is automatically controlled to modulate the amount of solar gain into the space in multiple steps. *Dynamic glazing* shall be considered separately from other fenestration, and area-weighted averaging with

other fenestration that is not dynamic glazing shall not be permitted.

Exception: *Dynamic glazing* is not required to comply with this section when both the lower and higher labeled SHGC already comply with the requirements of Table N1102.1.2.

N1102.3.3 (R402.3.3) Glazed fenestration exemption. Up to 15 square feet (1.4 m^2) of glazed fenestration per dwelling unit shall be permitted to be exempt from *U*-factor and SHGC requirements in Section N1102.1.2. This exemption shall not apply to the *U*-factor alternative approach in Section N1102.1.4 and the total UA alternative in Section N1102.1.5.

N1102.3.4 (R402.3.4) Opaque door exemption. One side-hinged opaque door assembly up to 24 square feet (2.22 m^2) in area is exempted from the *U*-factor requirement in Section N1102.1.2. This exemption shall not apply to the *U*-factor alternative approach in Section N1102.1.4 and the total UA alternative in Section N1102.1.5.

N1102.3.5 (R402.3.5) Sunroom fenestration. *Sunrooms* enclosing *conditioned space* shall meet the fenestration requirements of this code.

Exception: For *sunrooms* with *thermal isolation* and enclosing *conditioned space* in *Climate Zones* 2 through 8, the maximum fenestration *U*-factor shall be 0.45 and the maximum skylight *U*-factor shall be 0.70.

New fenestration separating the *sunroom* with *thermal isolation* from *conditioned space* shall meet the *building thermal envelope* requirements of this code.

N1102.4 (R402.4) Air leakage (Mandatory). The *building thermal envelope* shall be constructed to limit air leakage in accordance with the requirements of Sections R1102.4.1 through R1102.4.4.

N1102.4.1 (R402.4.1) Building thermal envelope. The *building thermal envelope* shall comply with Sections N1102.4.1.1 and N1102.4.1.2. The sealing methods between dissimilar materials shall allow for differential expansion and contraction.

N1102.4.1.1 (R402.4.1.1) Installation. The components of the *building thermal envelope* as listed in Table N1102.4.1.1 shall be installed in accordance with the manufacturer's instructions and the criteria listed in Table N1102.4.1.1, as applicable to the method of construction. Where required by the *building official*, an *approved* third party shall inspect all components and verify compliance.

N1102.4.1.2 (R402.4.1.2) Testing. The building or dwelling unit shall be tested and verified as having an air leakage rate of not exceeding five air changes per hour in Climate Zones 1 and 2, and three air changes per hour in Climate Zones 3 through 8. Testing shall be conducted in accordance with ASTM E 779 or ASTM E 1827 and reported at a pressure of 0.2 inches w.g. (50 Pascals). Where required by the *code official*, testing shall be conducted by an *approved* third party. A written report of the results of the test shall be signed by the party conducting the test and provided to the *code official*. Testing shall be performed at any time after creation of all penetrations of the *building thermal envelope*.

During testing:

1. Exterior windows and doors, fireplace and stove doors shall be closed, but not sealed, beyond the intended weatherstripping or other infiltration control measures.
2. Dampers including exhaust, intake, makeup air, backdraft and flue dampers shall be closed, but not sealed beyond intended infiltration control measures.
3. Interior doors, if installed at the time of the test, shall be open.
4. Exterior doors for continuous ventilation systems and heat recovery ventilators shall be closed and sealed.
5. Heating and cooling systems, if installed at the time of the test, shall be turned off.
6. Supply and return registers, if installed at the time of the test, shall be fully open.

N1102.4.2 (R402.4.2) Fireplaces. New wood-burning fireplaces shall have tight-fitting flue dampers or doors, and outdoor combustion air. Where using tight-fitting doors on factory-built fireplaces listed and labeled in accordance with UL 127, the doors shall be tested and listed for the fireplace. Where using tight-fitting doors on masonry fireplaces, the doors shall be listed and labeled in accordance with UL 907.

N1102.4.3 (R402.4.3) Fenestration air leakage. Windows, skylights and sliding glass doors shall have an air infiltration rate of no more than 0.3 cfm per square foot (1.5 L/s/m^2), and swinging doors no more than 0.5 cfm per square foot (2.6 L/s/m^2), when tested according to NFRC 400 or AAMA/WDMA/CSA 101/I.S.2/A440 by an accredited, independent laboratory and *listed* and *labeled* by the manufacturer.

Exception: Site-built windows, skylights and doors.

N1102.4.4 (R402.4.4) Rooms containing fuel-burning appliances. In Climate Zones 3 through 8, where open combustion air ducts provide combustion air to open combustion fuel-burning appliances, the appliances and combustion air opening shall be located outside the building thermal envelope or enclosed in a room, isolated from inside the thermal envelope. Such rooms shall be sealed and insulated in accordance with the envelope requirements of Table N1102.1.2, where the walls, floors and ceilings shall meet a minimum of the basement wall *R*-value requirement. The door into the room shall be fully gasketed and any water lines and ducts in the room insulated in accordance with Section N1103. The combustion air duct shall be insulated where it passes through conditioned space to a minimum of R-8.

Exceptions:

1. Direct vent appliances with both intake and exhaust pipes installed continuous to the outside.
2. Fireplaces and stoves complying with Sections N1102.4.2 and R1006.

TABLE N1102.4.1.1 (402.4.1.1)
AIR BARRIER AND INSULATION INSTALLATION

COMPONENT	AIR BARRIER CRITERIA	INSULATION INSTALLATION CRITERIA
General requirements	A continuous air barrier shall be installed in the building envelope. The exterior thermal envelope contains a continuous air barrier. Breaks or joints in the air barrier shall be sealed.	Air-permeable insulation shall not be used as a sealing material.
Ceiling/attic	The air barrier in any dropped ceiling/soffit shall be aligned with the insulation and any gaps in the air barrier sealed. Access openings, drop down stairs or knee wall doors to unconditioned attic spaces shall be sealed.	The insulation in any dropped ceiling/soffit shall be aligned with the air barrier.
Walls	The junction of the foundation and sill plate shall be sealed. The junction of the top plate and the top of exterior walls shall be sealed. Knee walls shall be sealed.	Cavities within corners and headers of frame walls shall be insulated by completely filling the cavity with a material having a thermal resistance of R-3 per inch minimum. Exterior thermal envelope insulation for framed walls shall be installed in substantial contact and continuous alignment with the air barrier.
Windows, skylights and doors	The space between window/door jambs and framing, and skylights and framing shall be sealed.	
Rim joists	Rim joists shall include the air barrier.	Rim joists shall be insulated.
Floors (including above garage and cantilevered floors)	The air barrier shall be installed at any exposed edge of insulation.	Floor framing cavity insulation shall be installed to maintain permanent contact with the underside of subfloor decking, or floor framing cavity insulation shall be permitted to be in contact with the top side of sheathing, or continuous insulation installed on the underside of floor framing; and extends from the bottom to the top of all perimeter floor framing members.
Crawl space walls	Exposed earth in unvented crawl spaces shall be covered with a Class I vapor retarder with overlapping joints taped.	Where provided instead of floor insulation, insulation shall be permanently attached to the crawl space walls.
Shafts, penetrations	Duct shafts, utility penetrations, and flue shafts opening to exterior or unconditioned space shall be sealed.	
Narrow cavities		Batts in narrow cavities shall be cut to fit, or narrow cavities shall be filled by insulation that on installation readily conforms to the available cavity space.
Garage separation	Air sealing shall be provided between the garage and conditioned spaces.	
Recessed lighting	Recessed light fixtures installed in the building thermal envelope shall be sealed to the drywall.	Recessed light fixtures installed in the building thermal envelope shall be air tight and IC rated.
Plumbing and wiring		Batt insulation shall be cut neatly to fit around wiring and plumbing in exterior walls, or insulation that on installation readily conforms to available space shall extend behind piping and wiring.
Shower/tub on exterior wall	The air barrier installed at exterior walls adjacent to showers and tubs shall separate them from the showers and tubs.	Exterior walls adjacent to showers and tubs shall be insulated.
Electrical/phone box on exterior walls	The air barrier shall be installed behind electrical or communication boxes or air-sealed boxes shall be installed.	
HVAC register boots	HVAC register boots that penetrate building thermal envelope shall be sealed to the subfloor or drywall.	
Concealed sprinklers	When required to be sealed, concealed fire sprinklers shall only be sealed in a manner that is recommended by the manufacturer. Caulking or other adhesive sealants shall not be used to fill voids between fire sprinkler cover plates and walls or ceilings.	

a. In addition, inspection of log walls shall be in accordance with the provisions of ICC 400.

N1102.4.5 (R402.4.5) Recessed lighting. Recessed luminaires installed in the *building thermal envelope* shall be sealed to limit air leakage between conditioned and unconditioned spaces. All recessed luminaires shall be IC-rated and *labeled* as having an air leakage rate not more than 2.0 cfm (0.944 L/s) when tested in accordance with ASTM E 283 at a 1.57 psf (75 Pa) pressure differential. All recessed luminaires shall be sealed with a gasket or caulk between the housing and the interior wall or ceiling covering.

N1102.5 (R402.5) Maximum fenestration *U*-factor and SHGC (Mandatory). The area-weighted average maximum fenestration *U*-factor permitted using tradeoffs from Section N1102.1.5 or N1105 shall be 0.48 in climate zones 4 and 5 and 0.40 in climate zones 6 through 8 for vertical fenestration, and 0.75 in climate zones 4 through 8 for skylights. The area-weighted average maximum fenestration SHGC permitted using tradeoffs from Section N1105 in climate zones 1 through 3 shall be 0.50.

SECTION N1103 (R403) SYSTEMS

N1103.1 (R403.1) Controls (Mandatory). At least one thermostat shall be provided for each separate heating and cooling system.

N1103.1.1 (R403.1.1) Programmable thermostat. The thermostat controlling the primary heating or cooling system of the dwelling unit shall be capable of controlling the heating and cooling system on a daily schedule to maintain different temperature set points at different times of the day. This thermostat shall include the capability to set back or temporarily operate the system to maintain *zone* temperatures down to 55°F (13°C) or up to 85°F (29°C). The thermostat shall initially be programmed by the manufacturer with a heating temperature set point no higher than 70°F (21°C) and a cooling temperature set point no lower than 78°F (26°C).

N1103.1.2 (R403.1.2) Heat pump supplementary heat (Mandatory). Heat pumps having supplementary electric-resistance heat shall have controls that, except during defrost, prevent supplemental heat operation when the heat pump compressor can meet the heating load.

N1103.2 (R403.2) Hot water boiler outdoor temperature setback. Hot water boilers that supply heat to the building through one- or two-pipe heating systems shall have an outdoor setback control that lowers the boiler water temperature based on the outdoor temperature.

N1103.3 (R403.3) Ducts. Ducts and air handlers shall be in accordance with Sections N1103.3.1 through N1103.3.5.

N1103.3.1 (R403.3.1) Insulation (Prescriptive). Supply and return ducts in attics shall be insulated to a minimum of R-8 where 3 inches (76.2 mm) in diameter and greater and R-6 where less than 3 inches (76.2 mm) in diameter. Supply and return ducts in other portions of the building shall be insulated to a minimum of R-6 where 3 inches (76.2 mm) in diameter or greater and R-4.2 where less than 3 inches (76.2 mm) in diameter.

Exception: Ducts or portions thereof located completely inside the *building thermal envelope.*

N1103.3.2 (R403.3.2) Sealing (Mandatory). Ducts, air handlers and filter boxes shall be sealed. Joints and seams shall comply with either the *International Mechanical Code* or Section M1601.4.1 of this code, as applicable.

Exceptions:

1. Air-impermeable spray foam products shall be permitted to be applied without additional joint seals.
2. For ducts having a static pressure classification of less than 2 inches of water column (500 Pa), additional closure systems shall not be required for continuously welded joints and seams, and locking-type joints and seams of other than the snap-lock and button-lock types.

N1103.3.2.1 (R403.3.2.1) Sealed air handler. Air handlers shall have a manufacturer's designation for an air leakage of no more than 2 percent of the design air flow rate when tested in accordance with ASHRAE 193.

N1103.3.3 (R403.3.3) Duct testing (Mandatory). Ducts shall be pressure tested to determine air leakage by one of the following methods:

1. Rough-in test: Total leakage shall be measured with a pressure differential of 0.1 inch w.g. (25 Pa) across the system, including the manufacturer's air handler enclosure if installed at the time of the test. All registers shall be taped or otherwise sealed during the test.
2. Postconstruction test: Total leakage shall be measured with a pressure differential of 0.1 inch w.g. (25 Pa) across the entire system, including the manufacturer's air handler enclosure. Registers shall be taped or otherwise sealed during the test.

   Exception: A duct air leakage test shall not be required where the ducts and air handlers are located entirely within the building thermal envelope.

A written report of the results of the test shall be signed by the party conducting the test and provided to the *code official.*

N1103.3.4 (R403.3.4) Duct leakage (Prescriptive). The total leakage of the ducts, where measured in accordance with Section R403.3.3, shall be as follows:

1. Rough-in test: The total leakage shall be less than or equal to 4 cubic feet per minute (113.3 L/min) per 100 square feet (9.29 m^2) of conditioned floor area where the air handler is installed at the time of the test. Where the air handler is not installed at the time of the test, the total leakage shall be less than or equal to 3 cubic feet per minute (85 L/min) per 100 square feet (9.29 m^2) of conditioned floor area.

2. Postconstruction test: Total leakage shall be less than or equal to 4 cubic feet per minute (113.3 L/min) per 100 square feet (9.29 m^2) of conditioned floor area.

N1103.3.5 (R403.3.5) Building cavities (Mandatory). Building framing cavities shall not be used as ducts or plenums.

N1103.4 (R403.4) Mechanical system piping insulation (Mandatory). Mechanical system piping capable of carrying fluids above 105°F (41°C) or below 55°F (13°C) shall be insulated to a minimum of R-3.

N1103.4.1 (R403.4.1) Protection of piping insulation. Piping insulation exposed to weather shall be protected from damage, including that caused by sunlight, moisture, equipment maintenance and wind, and shall provide shielding from solar radiation that can cause degradation of the material. Adhesive tape shall not be permitted.

N1103.5 (R403.5) Service hot water systems. Energy conservation measures for service hot water systems shall be in accordance with Sections N1103.5.1 and N1103.5.4.

N1103.5.1 (R403.5.1) Heated water circulation and temperature maintenance systems (Mandatory). Heated water circulation systems shall be in accordance with Section R1103.5.1.1. Heat trace temperature maintenance systems shall be in accordance with Section R1103.5.1.2. Automatic controls, temperature sensors and pumps shall be accessible. Manual controls shall be readily *accessible*.

N1103.5.1.1 (R403.5.1.1) Circulation systems. Heated water circulation systems shall be provided with a circulation pump. The system return pipe shall be a dedicated return pipe or a cold water supply pipe. Gravity and thermo-syphon circulation systems shall be prohibited. Controls for circulating hot water system pumps shall start the pump based on the identification of a demand for hot water within the occupancy. The controls shall automatically turn off the pump when the water in the circulation loop is at the desired temperature and when there is no demand for hot water.

N1103.5.1.2 (R403.5.1.2) Heat trace systems. Electric heat trace systems shall comply with IEEE 515.1 or UL 515. Controls for such systems shall automatically adjust the energy input to the heat tracing to maintain the desired water temperature in the piping in accordance with the times when heated water is used in the occupancy.

N1103.5.2 (R403.5.2) Demand recirculation systems. A water distribution system having one or more recirculation pumps that pump water from a heated water supply pipe back to the heated water source through a cold water supply pipe shall be a *demand recirculation water system*. Pumps shall have controls that comply with both of the following:

1. The control shall start the pump upon receiving a signal from the action of a user of a fixture or appliance, sensing the presence of a user of a fixture or sensing the flow of hot or tempered water to a fixture fitting or appliance.
2. The control shall limit the temperature of the water entering the cold water piping to 104°F (40°C).

N1103.5.3 (R403.5.3) Hot water pipe insulation (Prescriptive). Insulation for hot water pipe with a minimum thermal resistance (*R*-value) of R-3 shall be applied to the following:

1. Piping $^3/_4$ inch (19 mm) and larger in nominal diameter.
2. Piping serving more than one dwelling unit.
3. Piping located outside the conditioned space.
4. Piping from the water heater to a distribution manifold.
5. Piping located under a floor slab.
6. Buried in piping.
7. Supply and return piping in recirculation systems other than demand recirculation systems.

N1103.5.4 (R403.5.4) Drain water heat recovery units. Drain water heat recovery units shall comply with CSA 55.2. Drain water heat recovery units shall be tested in accordance with CSA 55.1. Potable water-side pressure loss of drain water heat recovery units shall be less than 3 psi (20.7 kPa) for individual units connected to one or two showers. Potable water-side pressure loss of drain water heat recovery units shall be less than 2 psi (13.8 kPa) for individual units connected to three or more showers.

N1103.6 (R403.6) Mechanical ventilation (Mandatory). The building shall be provided with ventilation that meets the requirements of Section M1507 of this code or the *International Mechanical Code*, as applicable, or with other approved means of ventilation. Outdoor air intakes and exhausts shall have automatic or gravity dampers that close when the ventilation system is not operating.

N1103.6.1 (R403.6.1) Whole-house mechanical ventilation system fan efficacy. Mechanical ventilation system fans shall meet the efficacy requirements of Table N1103.6.1.

Exception: Where mechanical ventilation fans are integral to tested and listed HVAC equipment, they shall be powered by an electronically commutated motor.

N1103.7 (R403.7) Equipment sizing and efficiency rating (Mandatory). Heating and cooling equipment shall be sized in accordance with ACCA Manual S based on building loads calculated in accordance with ACCA Manual J or other *approved* heating and cooling calculation methodologies. New or replacement heating and cooling equipment shall have an efficiency rating equal to or greater than the minimum required by federal law for the geographic location where the equipment is installed.

TABLE N1103.6.1 (R403.6.1)
MECHANICAL VENTILATION SYSTEM FAN EFFICACY

FAN LOCATION	AIR FLOW RATE MINIMUM (CFM)	MINIMUM EFFICACY (CFM/WATT)	AIR FLOW RATE MAXIMUM (CFM)
Range hoods	Any	2.8 cfm/watt	Any
In-line fan	Any	2.8 cfm/watt	Any
Bathroom, utility room	10	1.4 cfm/watt	< 90
Bathroom, utility room	90	2.8 cfm/watt	Any

For SI: 1 cubic foot per minute = 28.3 L/min.

N1103.8 (R403.8) Systems serving multiple dwelling units (Mandatory). Systems serving multiple dwelling units shall comply with Sections C403 and C404 of the IECC—Commercial Provisions in lieu of Section N1103.

N1103.9 (R403.9) Snow melt system controls (Mandatory). Snow- and ice-melting systems, supplied through energy service to the building, shall include automatic controls capable of shutting off the system when the pavement temperature is above 50°F (10°C), and no precipitation is falling and an automatic or manual control that will allow shutoff when the outdoor temperature is above 40°F (4.8°C).

N1103.10 (R403.10) Pools and permanent spa energy consumption (Mandatory). The energy consumption of pools and permanent spas shall be in accordance with Sections N1103.10.1 through N1103.10.

N1103.10.1 (R403.10.1) Residential pools and permanent residential spas. Swimming pools and permanent spas that are accessory to detached one- and two-family dwellings and townhouses three stories or less in height above grade plane and that are available only to the household and its guests shall be in accordance with APSP-145.

N1103.10.2 (R403.10.2) Heaters. The electric power to heaters shall be controlled by a readily *accessible* on-off switch that is an integral part of the heater mounted on the exterior of the heater, or external to and within 3 feet (914 mm) of the heater. Operation of such switch shall not change the setting of the heater thermostat. Such switches shall be in addition to a circuit breaker for the power to the heater. Gas-fired heaters shall not be equipped with continuously burning ignition pilots.

N403.10.3 (R403.10.3) Time switches. Time switches or other control methods that can automatically turn off and on according to a preset schedule shall be installed for heaters and pump motors. Heaters and pump motors that have built-in time switches shall be in compliance with this section.

Exceptions:

1. Where public health standards require 24-hour pump operation.
2. Pumps that operate solar- and waste-heat-recovery pool heating systems.

N1103.10.4 (R403.10.4) Covers. Outdoor heated pools and outdoor permanent spas shall be provided with a vapor-retardant cover or other *approved* vapor-retardant means.

Exception: Where more than 70 percent of the energy for heating, computed over an operation season, is from site-recovered energy, such as from a heat pump or solar energy source, covers or other vapor-retardant means shall not be required.

N1103.11 (R403.11) Portable spas (Mandatory). The energy consumption of electric-powered portable spas shall be controlled by the requirements of APSP-14.

N1103.12 (R403.12) Residential pools and permanent residential spas. Residential swimming pools and permanent residential spas that are accessory to detached one- and two-family dwellings and townhouses 3 stories or less in height above grade plane and that are available only to the household and its guests shall be in accordance with APSP-15.

SECTION N1104 (R404) ELECTRICAL POWER AND LIGHTING SYSTEMS (MANDATORY)

N1104.1 (R404.1) Lighting equipment (Mandatory). Not less than 75 percent of the lamps in permanently installed lighting fixtures shall be high-efficacy lamps or not less than 75 percent of the permanently installed lighting fixtures shall contain only high-efficacy lamps.

Exception: Low-voltage lighting.

N1104.1.1 (R404.1.1) Lighting equipment (Mandatory). Fuel gas lighting systems shall not have continuously burning pilot lights.

SECTION N1105 (R405) SIMULATED PERFORMANCE ALTERNATIVE (PERFORMANCE)

N1105.1 (R405.1) Scope. This section establishes criteria for compliance using simulated energy performance analysis. Such analysis shall include heating, cooling and service water heating energy only.

N1105.2 (R405.2) Mandatory requirements. Compliance with this section requires that the mandatory provisions identified in Section N1101.13 be met. All supply and return ducts not completely inside the *building thermal envelope* shall be insulated to a minimum of R-6.

N1105.3 (R405.3) Performance-based compliance. Compliance based on simulated energy performance requires that a proposed residence *(proposed design)* be shown to have an annual energy cost that is less than or equal to the annual energy cost of the *standard reference design.* Energy prices shall be taken from a source *approved* by the *building official,* such as the Department of Energy, Energy Information Administration's *State Energy Price and Expenditure Report.*

Building officials shall be permitted to require time-of-use pricing in energy cost calculations.

Exception: The energy use based on source energy expressed in Btu (J) or Btu per square foot (J/m^2) of *conditioned floor area* shall be permitted to be substituted for the energy cost. The source energy multiplier for electricity shall be 3.16. The source energy multiplier for fuels other than electricity shall be 1.1.

N1105.4 (R405.4) Documentation. Documentation of the software used for the performance design and the parameters for the building shall be in accordance with Sections N1105.4.1 through N1105.4.3.

N1105.4.1 (R405.4.1) Compliance software tools. Documentation verifying that the methods and accuracy of the compliance software tools conform to the provisions of this section shall be provided to the *building official.*

N1105.4.2 (R405.4.2) Compliance report. Compliance software tools shall generate a report that documents that the *proposed design* complies with Section N1105.3. A compliance report on the *proposed design* shall be submitted with the application for the building permit. Upon completion of the building, a compliance report based on the as-built condition of the building shall be submitted to the *code official* before a certificate of occupancy is issued. Batch sampling of buildings to determine energy code compliance for all buildings in the batch shall be prohibited.

Compliance reports shall include information in accordance with Sections N1105.4.2.1 and N1105.4.2.2. Where the *proposed design* of a building could be built on different sites where the cardinal orientation of the building on each site is different, compliance of the *proposed design* for the purposes of the application for the building permit shall be based on the worst-case orientation, worst-case configuration, worst-case building air leakage and worst-case duct leakage. Such worst-case parameters shall be used as inputs to the compliance software for energy analysis.

N1105.4.2.1 (R405.4.2.1) Compliance report for permit application. A compliance report submitted with the application for building permit shall include the following:

1. Building street address, or other building site identification.
2. A statement indicating that the *proposed design* complies with Section N1105.3.
3. An inspection checklist documenting the building component characteristics of the *proposed design* as indicated in Table N1105.5.2(1). The inspection checklist shall show results for both the *standard reference design* and the *proposed design* with user inputs to the compliance software to generate the results.
4. A site-specific energy analysis report that is in compliance with Section N1105.3.
5. The name of the individual performing the analysis and generating the report.
6. The name and version of the compliance software tool.

N1105.4.2.2 (R405.4.2.2) Compliance report for certificate of occupancy. A compliance report submitted for obtaining the certificate of occupancy shall include the following:

1. Building street address, or other building site identification.
2. A statement indicating that the as-built building complies with Section N1105.3.
3. A certificate indicating that the building passes the performance matrix for code compliance and listing the energy saving features of the buildings.
4. A site-specific energy analysis report that is in compliance with Section N1105.3.
5. The name of the individual performing the analysis and generating the report.
6. The name and version of the compliance software tool.

N1105.4.3 (R405.4.3) Additional documentation. The *building official* shall be permitted to require the following documents:

1. Documentation of the building component characteristics of the *standard reference design.*
2. A certification signed by the builder providing the building component characteristics of the *proposed design* as given in Table N1105.5.2(1).
3. Documentation of the actual values used in the software calculations for the *proposed design.*

N1105.5 (R405.5) Calculation procedure. Calculations of the performance design shall be in accordance with Sections N1105.5.1 and N1105.5.2.

N1105.5.1 (R405.5.1) General. Except as specified by this section, the *standard reference design* and *proposed design* shall be configured and analyzed using identical methods and techniques.

N1105.5.2 (R405.5.2) Residence specifications. The *standard reference design* and *proposed design* shall be configured and analyzed as specified by Table N1105.5.2(1). Table N1105.5.2(1) shall include, by reference, all notes contained in Table N1102.1.2.

N1105.6 (R405.6) Calculation software tools. Calculation software, where used, shall be in accordance with Sections N1105.6.1 through N1105.6.3.

TABLE N1105.5.2(1) [R405.5.2(1)]
SPECIFICATIONS FOR THE STANDARD REFERENCE AND PROPOSED DESIGNS

BUILDING COMPONENT	STANDARD REFERENCE DESIGN	PROPOSED DESIGN
Above-grade walls	Type: mass wall if proposed wall is mass; otherwise wood frame.	As proposed
	Gross area: same as proposed	As proposed
	U-factor: as specified in Table N1102.1.4	As proposed
	Solar absorptance = 0.75	As proposed
	Remittance = 0.90	As proposed
Basement and crawl space walls	Type: same as proposed	As proposed
	Gross area: same as proposed	As proposed
	U-factor: from Table N1102.1.4, with insulation layer on interior side of walls	As proposed
Above-grade floors	Type: wood frame	As proposed
	Gross area: same as proposed	As proposed
	U-factor: as specified in Table N1102.1.4	As proposed
Ceilings	Type: wood frame	As proposed
	Gross area: same as proposed	As proposed
	U-factor: as specified in Table N1102.1.4	As proposed
Roofs	Type: composition shingle on wood sheathing	As proposed
	Gross area: same as proposed	As proposed
	Solar absorptance = 0.75	As proposed
	Emittance = 0.90	As proposed
Attics	Type: vented with aperture = 1 ft^2 per 300 ft^2 ceiling area	As proposed
Foundations	Type: same as proposed	As proposed
	Foundation wall area above and below grade and soil characteristics: same as proposed	As proposed
Opaque doors	Area: 40 ft^2	As proposed
	Orientation: North	As proposed
	U-factor: same as fenestration from Table N1102.1.4	As proposed
Vertical fenestration other than opaque doors	Total area[b] = (a) The proposed glazing area, where the proposed glazing area is less than 15 percent of the conditioned floor area (b) 15 percent of the conditioned floor area, where the proposed glazing area is 15 percent or more of the conditioned floor area	As proposed
	Orientation: equally distributed to four cardinal compass orientations (N, E, S & W).	As proposed
	U-factor: as specified in Table N1102.1.4	As proposed
	SHGC: as specified in Table N1102.1.2 except that for climates with no requirement (NR) SHGC = 0.40 shall be used.	As proposed
	Interior shade fraction: 0.92-(0.21 × SHGC for the standard reference design)	0.92-(0.21 × SHGC as proposed)
	External shading: none	As proposed
Skylights	None	As proposed
Thermally isolated sunrooms	None	As proposed
Air exchange rate	Air leakage rate of 5 air changes per hour in Climate Zones 1 and 2, and 3 air changes per hour in Climate Zones 3 through 8 at a pressure of 0.2 inches w.g (50 Pa). The mechanical ventilation rate shall be in addition to the air leakage rate and the same as in the proposed design, but no greater than $0.01 \times CFA + 7.5 \times (N_{br} + 1)$ where: CFA = conditioned floor area N_{br} = number of bedrooms Energy recovery shall not be assumed for mechanical ventilation.	For residences that are not tested, the same air leakage rate as the standard reference design. For tested residences, the measured air exchange rate[a]. The mechanical ventilation rate[b] shall be in addition to the air leakage rate and shall be as proposed.

(continued)

2931

TABLE N1105.5.2(1) [R405.5.2(1)]—continued
SPECIFICATIONS FOR THE STANDARD REFERENCE AND PROPOSED DESIGNS

BUILDING COMPONENT	STANDARD REFERENCE DESIGN	PROPOSED DESIGN
Mechanical ventilation	None, except where mechanical ventilation is specified by the proposed design, in which case: Annual vent fan energy use: kWh/yr = 0.03942 × *CFA* + 29.565 × (N_{br} +1) where: *CFA* = conditioned floor area N_{br} = number of bedrooms	As proposed
Internal gains	IGain = 17,900 + 23.8 × *CFA* + 4104 × N_{br} (Btu/day per dwelling unit)	Same as standard reference design.
Internal mass	An internal mass for furniture and contents of 8 pounds per square foot of floor area.	Same as standard reference design, plus any additional mass specifically designed as a thermal storage element[c] but not integral to the building envelope or structure.
Structural mass	For masonry floor slabs, 80 percent of floor area covered by R-2 carpet and pad, and 20 percent of floor directly exposed to room air.	As proposed
	For masonry basement walls, as proposed, but with insulation required by Table R402.1.4 located on the interior side of the walls	As proposed
	For other walls, for ceilings, floors, and interior walls, wood frame construction	As proposed
Heating systems[d, e]	As proposed for other than electric heating without a heat pump, where the proposed design utilizes electric heating without a heat pump the standard reference design shall be an air source heat pump meeting the requirements of Section C403 of the IECC-Commercial Provisions. Capacity: sized in accordance with Section N1103.7	As proposed
Cooling systems[d, f]	As proposed Capacity: sized in accordance with Section N1103.7.	As proposed
Service water heating[d, e, f]	As proposed Use: same as proposed design	As proposed gal/day = 30 + (10 × N_{br})
Thermal distribution systems	Duct insulation: From Section N1103.2.1 A thermal distribution system efficiency (DSE) of 0.88 shall be applied to both the heating and cooling system efficiencies for all systems other than tested duct systems. For tested duct systems, the leakage rate shall be 4 cfm (113.3 L/min) per 100 ft^2 (9.29 m^2) of *conditioned floor* area at a pressure of differential of 0.1 inches w.g. (25 Pa).	As tested or as specified in Table R405.5.2(2) if not tested. Duct insulation shall be as proposed.
Thermostat	Type: Manual, cooling temperature setpoint = 75°F; Heating temperature setpoint = 72°F	Same as standard reference

For SI: 1 square foot = 0.93 m^2, 1 British thermal unit = 1055 J, 1 pound per square foot = 4.88 kg/m^2, 1 gallon (US) = 3.785 L, °C = (°F-32)/1.8, 1 degree = 0.79 rad.

a. Where required by the *code official*, testing shall be conducted by an *approved* party. Hourly calculations as specified in the ASHRAE *Handbook of Fundamentals*, or the equivalent shall be used to determine the energy loads resulting from infiltration.

b. The combined air exchange rate for infiltration and mechanical ventilation shall be determined in accordance with Equation 43 of 2001 ASHRAE *Handbook of Fundamentals*, page 26.24 and the "Whole-house Ventilation" provisions of 2001 ASHRAE *Handbook of Fundamentals*, page 26.19 for intermittent mechanical ventilation.

c. Thermal storage element shall mean a component not part of the floors, walls or ceilings that is part of a passive solar system, and that provides thermal storage such as enclosed water columns, rock beds, or phase-change containers. A thermal storage element must be in the same room as fenestration that faces within 15 degrees (0.26 rad) of true south, or must be connected to such a room with pipes or ducts that allow the element to be actively charged.

d. For a proposed design with multiple heating, cooling or water heating systems using different fuel types, the applicable standard reference design system capacities and fuel types shall be weighted in accordance with their respective loads as calculated by accepted engineering practice for each equipment and fuel type present.

e. For a proposed design without a proposed heating system, a heating system with the prevailing federal minimum efficiency shall be assumed for both the standard reference design and proposed design.

f. For a proposed design home without a proposed cooling system, an electric air conditioner with the prevailing federal minimum efficiency shall be assumed for both the standard reference design and the proposed design.

g. For a proposed design with a nonstorage-type water heater, a 40-gallon storage-type water heater with the prevailing federal minimum energy factor for the same fuel as the predominant heating fuel type shall be assumed. For the case of a proposed design without a proposed water heater, a 40-gallon storage-type water heater with the prevailing federal minimum efficiency for the same fuel as the predominant heating fuel type shall be assumed for both the proposed design and standard reference design.

TABLE N1105.5.2(2) [R405.5.2(2)]
DEFAULT DISTRIBUTION SYSTEM EFFICIENCIES FOR PROPOSED DESIGNS[a]

DISTRIBUTION SYSTEM CONFIGURATION AND CONDITION	FORCED AIR SYSTEMS	HYDRONIC SYSTEMS[b]
Distribution system components located in unconditioned space	—	0.95
Untested distribution systems entirely located in conditioned space[c]	0.88	1
"Ductless" systems[d]	1	—

For SI: 1 cubic foot per minute = 0.47 L/s, 1 square foot = 0.093m^2, 1 pound per square inch = 6895 Pa, 1 inch water gauge = 1250 Pa.

a. Default values given by this table are for untested distribution systems, which must still meet minimum requirements for duct system insulation.

b. Hydronic systems shall mean those systems that distribute heating and cooling energy directly to individual spaces using liquids pumped through closed-loop piping and that do not depend on ducted, forced airflow to maintain space temperatures.

c. Entire system in conditioned space shall mean that no component of the distribution system, including the air handler unit, is located outside of the conditioned space.

d. Ductless systems shall be allowed to have forced airflow across a coil but shall not have any ducted airflow external to the manufacturer's air handler enclosure.

N1105.6.1 (R405.6.1) Minimum capabilities. Calculation procedures used to comply with this section shall be software tools capable of calculating the annual energy consumption of all building elements that differ between the *standard reference design* and the *proposed design* and shall include the following capabilities:

1. Computer generation of the *standard reference design* using only the input for the *proposed design.* The calculation procedure shall not allow the user to directly modify the building component characteristics of the *standard reference design.*
2. Calculation of whole-building (as a single *zone)* sizing for the heating and cooling equipment in the *standard reference design* residence in accordance with Section N1103.6.
3. Calculations that account for the effects of indoor and outdoor temperatures and part-load ratios on the performance of heating, ventilating and air-conditioning equipment based on climate and equipment sizing.
4. Printed *building official* inspection checklist listing each of the *proposed design* component characteristics from Table N1105.5.2(1) determined by the analysis to provide compliance, along with their respective performance ratings (*R*-value, *U*-factor, SHGC, HSPF, AFUE, SEER, EF are some examples).

N1105.6.2 (R405.6.2) Specific approval. Performance analysis tools meeting the applicable provisions of Section N1105 shall be permitted to be *approved.* Tools are permitted to be *approved* based on meeting a specified threshold for a jurisdiction. The *building official* shall be permitted to approve tools for a specified application or limited scope.

N1105.6.3 (R405.6.3) Input values. When calculations require input values not specified by Sections N1102, N1103, N1104 and N1105, those input values shall be taken from an *approved* source.

SECTION N1106 (R406) ENERGY RATING INDEX COMPLIANCE ALTERNATIVE

N1106.1 (R406.1) Scope. This section establishes criteria for compliance using an Energy Rating Index (ERI) analysis.

N1106.2 (R406.2) Mandatory requirements. Compliance with this section requires that the mandatory provisions identified in Sections N1101.2 and N1103.5.3 be met. The building thermal envelope shall be greater than or equal to levels of efficiency and Solar Heat Gain Coefficient in Table 402.1.2 or 402.1.4 of the 2009 *International Energy Conservation Code.*

Exception: Supply and return ducts not completely inside the building thermal envelope shall be insulated to a minimum of R-6.

N1106.3 (R406.3) Energy rating index. The Energy Rating Index (ERI) shall be a numerical integer value that is based on a linear scale constructed such that the *ERI reference design* has an Index value of 100 and a *residential building* that uses no net purchased energy has an Index value of 0. Each integer value on the scale shall represent a one percent change in the total energy use of the rated design relative to the total energy use of the *ERI reference design.* The ERI shall consider all energy used in the *residential building.*

N1106.3.1 (R406.3.1) ERI reference design. The *ERI reference design* shall be configured such that it meets the minimum requirements of the 2006 *International Energy Conservation Code* prescriptive requirements.

The proposed *residential building* shall be shown to have an annual total normalized modified load less than or equal to the annual total loads of the *ERI reference design.*

N1106.4 (R406.4) ERI-based compliance. Compliance based on an ERI analysis requires that the *rated design* be shown to have an ERI less than or equal to the appropriate value listed in Table N1106.4 when compared to the *ERI reference design.*

TABLE N1106.4 (R406.4)
MAXIMUM ENERGY RATING INDEX

CLIMATE ZONE	ENERGY RATING INDEX
1	52
2	52
3	51
4	54
5	55
6	54
7	53
8	53

N1106.5 (R406.5) Verification by approved agency. Verification of compliance with Section N1106 shall be completed by an *approved* third party.

N1106.6 (R406.6) Documentation. Documentation of the software used to determine the ERI and the parameters for the residential building shall be in accordance with Sections N1106.6.1 through N1106.6.3.

N1106.6.1 (R406.6.1) Compliance software tools. Documentation verifying that the methods and accuracy of the compliance software tools conform to the provisions of this section shall be provided to the *code official.*

N1106.6.2 (R406.6.2) Compliance report. Compliance software tools shall generate a report that documents that the ERI of the *rated design* complies with Sections N1106.3 and N1106.4. The compliance documentation shall include the following information:

1. Address or other identification of the residential building.
2. An inspection checklist documenting the building component characteristics of the *rated design.* The inspection checklist shall show results for both the *ERI reference design* and the *rated design,* and shall document all inputs entered by the user necessary to reproduce the results.
3. Name of individual completing the compliance report.
4. Name and version of the compliance software tool.

Exception: Multiple orientations. Where an otherwise identical building model is offered in multiple orientations, compliance for any orientation shall be permitted by documenting that the building meets the performance requirements in each of the four (north, east, south and west) cardinal orientations.

N1106.6.3 (R406.6.3) Additional documentation. The *code official* shall be permitted to require the following documents:

1. Documentation of the building component characteristics of the *ERI reference design.*
2. A certification signed by the builder providing the building component characteristics of the *rated design.*
3. Documentation of the actual values used in the software calculations for the *rated design.*

N1106.7 (R406.7) Calculation software tools. Calculation software, where used, shall be in accordance with Sections N1106.7.1 through N1106.7.3.

N1106.7.1 R(406.7.1) Minimum capabilities. Calculation procedures used to comply with this section shall be software tools capable of calculating the ERI as described in Section N1106.3, and shall include the following capabilities:

1. Computer generation of the *ERI reference design* using only the input for the *rated design.*

The calculation procedure shall not allow the user to directly modify the building component characteristics of the *ERI reference design.*

2. Calculation of whole-building, as a single *zone,* sizing for the heating and cooling equipment in the *ERI reference design* residence in accordance with Section N1103.7.
3. Calculations that account for the effects of indoor and outdoor temperatures and part-load ratios on the performance of heating, ventilating and air-conditioning equipment based on climate and equipment sizing.
4. Printed *code official* inspection checklist listing each of the *rated design* component characteristics determined by the analysis to provide compliance, along with their respective performance ratings.

N1106.7.2 (406.7.2) Specific approval. Performance analysis tools meeting the applicable sections of Section N1106 shall be *approved.* Tools are permitted to be *approved* based on meeting a specified threshold for a jurisdiction. The *code official* shall approve tools for a specified application or limited scope.

N1106.7.3 (R406.7.3) Input values. When calculations require input values not specified by Sections N1102, N1103, N1104 and N1105, those input values shall be taken from an approved source.

SECTION N1107 (R501)
EXISTING BUILDINGS—GENERAL

N1107.1 (R501.1) Scope. The provisions of Sections N1107 through N1111 shall control the *alteration,* repair, addition and change of occupancy of existing buildings and structures.

N1107.1.1 (R501.1.1) Additions, alterations, or repairs: General. Additions, alterations, or repairs to an existing building, building system or portion thereof shall comply with Section N1108, N1109 or N1110. Unaltered portions of the existing building or building supply system shall not be required to comply with this chapter.

N1107.2 (R501.2) Existing buildings. Except as specified in this chapter, this code shall not be used to require the removal, *alteration* or abandonment of, nor prevent the continued use and maintenance of, an existing building or build-

ing system lawfully in existence at the time of adoption of this code.

N1107.3 (R501.3) Maintenance. Buildings and structures, and parts thereof, shall be maintained in a safe and sanitary condition. Devices and systems that are required by this code shall be maintained in conformance with the code edition under which installed. The owner or the owner's authorized agent shall be responsible for the maintenance of buildings and structures. The requirements of this chapter shall not provide the basis for removal or abrogation of energy conservation, fire protection and safety systems and devices in existing structures.

N1107.4 (R501.4) Compliance. *Alterations, repairs, additions* and changes of occupancy to, or relocation of, existing buildings and structures shall comply with the provisions for *alterations, repairs, additions* and changes of occupancy or relocation, respectively, in this code and the *International Building Code, International Fire Code, International Fuel Gas Code, International Mechanical Code, International Plumbing Code, International Property Maintenance Code, International Private Sewage Disposal Code* and NFPA 70.

N1107.5 (R501.5) New and replacement materials. Except as otherwise required or permitted by this code, materials permitted by the applicable code for new construction shall be used. Like materials shall be permitted for repairs, provided no hazard to life, health or property is created. Hazardous materials shall not be used where the code for new construction would not permit their use in buildings of similar occupancy, purpose and location.

N1107.6 (R501.6) Historic buildings. No provision of this chapter relating to the construction, *repair, alteration,* restoration and movement of structures, and *change of occupancy* shall be mandatory for *historic buildings* provided a report has been submitted to the code official and signed by the owner, a registered *design professional*, or a representative of the State Historic Preservation Office or the historic preservation authority having jurisdiction, demonstrating that compliance with that provision would threaten, degrade or destroy the historic form, fabric or function of the *building*.

SECTION N1108 (R502) ADDITIONS

N1108.1 (R502.1) General. Additions to an existing building, building system or portion thereof shall conform to the provisions of this chapter as they relate to new construction without requiring the unaltered portion of the existing building or building system to comply with this chapter. Additions shall not create an unsafe or hazardous condition or overload existing building systems. An addition shall be deemed to comply with this chapter where the addition alone complies, where the existing building and addition comply with this chapter as a single building, or where the building with the addition uses no more energy than the existing building. Additions shall be in accordance with Section N1108.1.1 or N1108.1.2.

N1108.1.1 (R502.1.1) Prescriptive compliance. Additions shall comply with Sections N1108.1.1.1 through N1108.1.1.4.

N1108.1.1.1 (R502.1.1.1) Building envelope. New building envelope assemblies that are part of the addition shall comply with Sections N1102.1, N1102.2, N1102.3.1 through N1102.3.5, and N1102.4.

Exception: Where nonconditioned space is changed to conditioned space, the building envelope of the addition shall comply where the UA, as determined in Section N1102.1.4, of the existing building and the addition, and any alterations that are part of the project, is less than or equal to UA generated for the existing building.

N1108.1.1.2 (R502.1.1.2) Heating and cooling systems. New heating, cooling and duct systems that are part of the addition shall comply with Sections N1103.1, N1103.2, N1103.3, N1103.5 and N1103.6.

Exception: Where ducts from an existing heating and cooling system are extended to an addition, duct systems with less than 40 linear feet (12.19 m) in unconditioned spaces shall not be required to be tested in accordance with Section N1103.2.2.

N1108.1.1.3 (R502.1.1.3) Service hot water systems. New service hot water systems that are part of the addition shall comply with Section N1103.4.

N1108.1.1.4 (R502.1.1.4) Lighting. New lighting systems that are part of the addition shall comply with Section N1104.1.

N1108.1.2 (R502.1.2) Existing plus addition compliance (Simulated Performance Alternative). Where nonconditioned space is changed to conditioned space, the addition shall comply where the annual energy cost or energy use of the addition and the existing building, and any alterations that are part of the project, is less than or equal to the annual energy cost of the existing building when modeled in accordance with Section N1105. The addition and any alterations that are part of the project shall comply with Section N1105 in its entirety.

SECTION N1109 (R503) ALTERATIONS

N1109.1 (R503.1) General. *Alterations* to any building or structure shall comply with the requirements of the code for new construction. *Alterations* shall be such that the existing building or structure is no less conforming with the provisions of this chapter than the existing building or structure was prior to the *alteration.*

Alterations to an existing building, building system or portion thereof shall conform to the provisions of this chapter as they relate to new construction without requiring the unaltered portions of the existing building or building system to comply with this chapter. Alterations shall not create an unsafe or hazardous condition or overload existing building systems. *Alterations* shall be such that the existing building or structure uses no more energy than the existing building or

structure prior to the *alteration*. Alterations to existing buildings shall comply with Sections N1109.1.1 through N1109.2.

N1109.1.1 (R503.1.1) Building envelope. Building envelope assemblies that are part of the alteration shall comply with Section N1102.1.2 or N1102.1.4, Sections N1102.2.1 through N1102.2.12, N1102.3.1, N1102.3.2, N1102.4.3 and N1102.4.4.

Exception: The following alterations need not comply with the requirements for new construction provided the energy use of the building is not increased:

1. Storm windows installed over existing fenestration.
2. Existing ceiling, wall or floor cavities exposed during construction provided that these cavities are filled with insulation.
3. Construction where the existing roof, wall or floor cavity is not exposed.
4. Roof recover.
5. Roofs without insulation in the cavity and where the sheathing or insulation is exposed during reroofing shall be insulated either above or below the sheathing.
6. Surface applied window film installed on existing single pane fenestration assemblies to reduce solar heat gain provided the code does not require the glazing or fenestration assembly to be replaced.

N1109.1.1.1 (R503.1.1.1) Replacement fenestration. Where some or all of an existing fenestration unit is replaced with a new fenestration product, including sash and glazing, the replacement fenestration unit shall meet the applicable requirements for *U*-factor and SHGC as provided in Table N1102.1.4.

N1109.1.2 (R503.1.2) Heating and cooling systems. New heating, cooling and duct systems that are part of the alteration shall comply with Sections N1103.1, N1103.2, N1103.3 and N1103.6.

Exception: Where ducts from an existing heating and cooling system are extended, duct systems with less than 40 linear feet (12.19 m) in unconditioned spaces shall not be required to be tested in accordance with Section N1103.3.3.

N1109.1.3 (R503.1.3) Service hot water systems. New service hot water systems that are part of the alteration shall comply with Section N1103.5.

N1109.1.4 (R503.1.4) Lighting. New lighting systems that are part of the alteration shall comply with Section N1104.1.

Exception: Alterations that replace less than 50 percent of the luminaires in a space, provided that such alterations do not increase the installed interior lighting power.

N1109.2 (R503.2) Change in space conditioning. Any nonconditioned or low energy space that is altered to become *conditioned space* shall be required to be brought into full compliance with this chapter.

Exception: Where the simulated performance option in Section N1105 is used to comply with this section, the annual energy cost of the proposed design is permitted to be 110 percent of the annual energy cost otherwise allowed by Section N1105.3.

SECTION N1110 (R504) REPAIRS

N1110.1 (R504.1) General. Buildings, structures and parts thereof shall be repaired in compliance with Section N1107.3 and this section. Work on nondamaged components necessary for the required *repair* of damaged components shall be considered part of the *repair* and shall not be subject to the requirements for *alterations* in this chapter. Routine maintenance required by Section N1107.3, ordinary repairs exempt from *permit*, and abatement of wear due to normal service conditions shall not be subject to the requirements for *repairs* in this section.

N1110.2 (R504.2) Application. For the purposes of this code, the following shall be considered repairs:

1. Glass-only replacements in an existing sash and frame.
2. Roof repairs.
3. Repairs where only the bulb and/or ballast within the existing luminaires in a space are replaced provided that the replacement does not increase the installed interior lighting power.

SECTION N1111 (R505) CHANGE OF OCCUPANCY OR USE

N1111.1 (R505.1) General. Spaces undergoing a change in occupancy that would result in an increase in demand for either fossil fuel or electrical energy shall comply with this code.

N1111.2 (R505.2) General. Any space that is converted to a dwelling unit or portion thereof from another use or occupancy shall comply with this code.

Exception: Where the simulated performance option in Section N1105 is used to comply with this section, the annual energy cost of the proposed design is permitted to be 110 percent of the annual energy cost otherwise allowed by Section N1105.3.

Part V—Mechanical

CHAPTER 12

MECHANICAL ADMINISTRATION

SECTION M1201
GENERAL

M1201.1 Scope. The provisions of Chapters 12 through 24 shall regulate the design, installation, maintenance, *alteration* and inspection of mechanical systems that are permanently installed and used to control environmental conditions within buildings. These chapters shall also regulate those mechanical systems, system components, *equipment* and *appliances* specifically addressed in this code.

M1201.2 Application. In addition to the general administration requirements of Chapter 1, the administrative provisions of this chapter shall also apply to the mechanical requirements of Chapters 13 through 24.

SECTION M1202
EXISTING MECHANICAL SYSTEMS

M1202.1 Additions, alterations or repairs. *Additions*, *alterations*, renovations or repairs to a mechanical system shall conform to the requirements for a new mechanical system without requiring the existing mechanical system to comply with all of the requirements of this code. *Additions, alterations* or repairs shall not cause an existing mechanical system to become unsafe, hazardous or overloaded. Minor *additions*, *alterations* or repairs to existing mechanical systems shall meet the provisions for new construction, unless such work is done in the same manner and arrangement as was in the existing system, is not hazardous, and is *approved*.

M1202.2 Existing installations. Except as otherwise provided for in this code, a provision in this code shall not require the removal, *alteration* or abandonment of, nor prevent the continued use and maintenance of, an existing mechanical system lawfully in existence at the time of the adoption of this code.

M1202.3 Maintenance. Mechanical systems, both existing and new, and parts thereof shall be maintained in proper operating condition in accordance with the original design and in a safe and sanitary condition. Devices or safeguards that are required by this code shall be maintained in compliance with the code edition under which installed. The owner or the owner's designated agent shall be responsible for maintenance of the mechanical systems. To determine compliance with this provision, the *building official* shall have the authority to require a mechanical system to be reinspected.

CHAPTER 13

GENERAL MECHANICAL SYSTEM REQUIREMENTS

SECTION M1301
GENERAL

M1301.1 Scope. The provisions of this chapter shall govern the installation of mechanical systems not specifically covered in other chapters applicable to mechanical systems. Installations of mechanical *appliances, equipment* and systems not addressed by this code shall comply with the applicable provisions of the *International Mechanical Code* and the *International Fuel Gas Code.*

M1301.1.1 Flood-resistant installation. In flood hazard areas as established by Table R301.2(1), mechanical *appliances, equipment* and systems shall be located or installed in accordance with Section R322.1.6.

M1301.2 Identification. Each length of pipe and tubing and each pipe fitting utilized in a mechanical system shall bear the identification of the manufacturer.

M1301.3 Installation of materials. Materials shall be installed in strict accordance with the standards under which the materials are accepted and approved. In the absence of such installation procedures, the manufacturer's instructions shall be followed. Where the requirements of referenced standards or manufacturer's instructions do not conform to minimum provisions of this code, the provisions of this code shall apply.

M1301.4 Plastic pipe, fittings and components. Plastic pipe, fittings and components shall be third-party certified as conforming to NSF 14.

M1301.5 Third-party testing and certification. Piping, tubing and fittings shall comply with the applicable referenced standards, specifications and performance criteria of this code and shall be identified in accordance with Section M1301.2. Piping, tubing and fittings shall either be tested by an approved third-party testing agency or certified by an approved third-party certification agency.

SECTION M1302
APPROVAL

M1302.1 Listed and labeled. *Appliances* regulated by this code shall be *listed* and *labeled* for the application in which they are installed and used, unless otherwise *approved* in accordance with Section R104.11.

SECTION M1303
LABELING OF APPLIANCES

M1303.1 Label information. A permanent factory-applied nameplate(s) shall be affixed to *appliances* on which shall appear, in legible lettering, the manufacturer's name or trademark, the model number, a serial number and the seal or *mark* of the testing agency. A *label* also shall include the following:

1. Electrical *appliances.* Electrical rating in volts, amperes and motor phase; identification of individual electrical components in volts, amperes or watts and motor phase; and in Btu/h (W) output and required clearances.
2. Absorption units. Hourly rating in Btu/h (W), minimum hourly rating for units having step or automatic modulating controls, type of fuel, type of refrigerant, cooling capacity in Btu/h (W) and required clearances.
3. Fuel-burning units. Hourly rating in Btu/h (W), type of fuel *approved* for use with the *appliance* and required clearances.
4. Electric comfort-heating appliances. The electric rating in volts, amperes and phase; Btu/h (W) output rating; individual marking for each electrical component in amperes or watts, volts and phase; and required clearances from combustibles.
5. Maintenance instructions. Required regular maintenance actions and title or publication number for the operation and maintenance manual for that particular model and type of product.

SECTION M1304
TYPE OF FUEL

M1304.1 Fuel types. Fuel-fired *appliances* shall be designed for use with the type of fuel to which they will be connected and the altitude at which they are installed. *Appliances* that comprise parts of the building mechanical system shall not be converted for the use of a different fuel, except where *approved* and converted in accordance with the manufacturer's instructions. The fuel input rate shall not be increased or decreased beyond the limit rating for the altitude at which the *appliance* is installed.

SECTION M1305
APPLIANCE ACCESS

M1305.1 Appliance access for inspection service, repair and replacement. *Appliances* shall be accessible for inspection, service, repair and replacement without removing permanent construction, other *appliances*, or any other piping or ducts not connected to the *appliance* being inspected, serviced, repaired or replaced. A level working space not less than 30 inches deep and 30 inches wide (762 mm by 762 mm) shall be provided in front of the control side to service an *appliance.*

M1305.1.1 Furnaces and air handlers. Furnaces and air handlers within compartments or alcoves shall have a minimum working space clearance of 3 inches (76 mm) along the sides, back and top with a total width of the enclosing space being not less than 12 inches (305 mm) wider than the furnace or air handler. Furnaces having a firebox open to the atmosphere shall have not less than a 6-inch (152 mm) working space along the front combustion chamber side. Combustion air openings at the rear or side of the compartment shall comply with the requirements of Chapter 17.

Exception: This section shall not apply to replacement *appliances* installed in existing compartments and alcoves where the working space clearances are in accordance with the *equipment* or *appliance* manufacturer's installation instructions.

M1305.1.2 Appliances in rooms. *Appliances* installed in a compartment, alcove, *basement* or similar space shall be accessed by an opening or door and an unobstructed passageway measuring not less than 24 inches (610 mm) wide and large enough to allow removal of the largest *appliance* in the space, provided there is a level service space of not less than 30 inches (762 mm) deep and the height of the *appliance*, but not less than 30 inches (762 mm), at the front or service side of the *appliance* with the door open.

M1305.1.3 Appliances in attics. *Attics* containing *appliances* shall be provided with an opening and a clear and unobstructed passageway large enough to allow removal of the largest *appliance*, but not less than 30 inches (762 mm) high and 22 inches (559 mm) wide and not more than 20 feet (6096 mm) long measured along the centerline of the passageway from the opening to the *appliance*. The passageway shall have continuous solid flooring in accordance with Chapter 5 not less than 24 inches (610 mm) wide. A level service space not less than 30 inches (762 mm) deep and 30 inches (762 mm) wide shall be present along all sides of the *appliance* where access is required. The clear access opening dimensions shall be not less than of 20 inches by 30 inches (508 mm by 762 mm), and large enough to allow removal of the largest appliance.

Exceptions:

1. The passageway and level service space are not required where the *appliance* can be serviced and removed through the required opening.
2. Where the passageway is unobstructed and not less than 6 feet (1829 mm) high and 22 inches (559 mm) wide for its entire length, the passageway shall be not more than 50 feet (15 250 mm) long.

M1305.1.3.1 Electrical requirements. A luminaire controlled by a switch located at the required passageway opening and a receptacle outlet shall be installed at or near the *appliance* location in accordance with Chapter 39. Exposed lamps shall be protected from damage by location or lamp guards.

M1305.1.4 Appliances under floors. Underfloor spaces containing *appliances* shall be provided with an unobstructed passageway large enough to remove the largest *appliance*, but not less than 30 inches (762 mm) high and 22 inches (559 mm) wide, nor more than 20 feet (6096 mm) long measured along the centerline of the passageway from the opening to the *appliance*. A level service space not less than 30 inches (762 mm) deep and 30 inches (762 mm) wide shall be present at the front or service side of the *appliance*. If the depth of the passageway or the service space exceeds 12 inches (305 mm) below the adjoining grade, the walls of the passageway shall be lined with concrete or masonry extending 4 inches (102 mm) above the adjoining grade in accordance with Chapter 4. The rough-framed access opening dimensions shall be not less than 22 inches by 30 inches (559 mm by 762 mm), and large enough to remove the largest *appliance*.

Exceptions:

1. The passageway is not required where the level service space is present when the access is open, and the *appliance* can be serviced and removed through the required opening.
2. Where the passageway is unobstructed and not less than 6 feet high (1929 mm) and 22 inches (559 mm) wide for its entire length, the passageway shall not be limited in length.

M1305.1.4.1 Ground clearance. *Equipment* and *appliances* supported from the ground shall be level and firmly supported on a concrete slab or other *approved* material extending not less than 3 inches (76 mm) above the adjoining ground. Such support shall be in accordance with the manufacturer's installation instructions. *Appliances* suspended from the floor shall have a clearance of not less than 6 inches (152 mm) from the ground.

M1305.1.4.2 Excavations. Excavations for *appliance* installations shall extend to a depth of 6 inches (152 mm) below the *appliance* and 12 inches (305 mm) on all sides, except that the control side shall have a clearance of 30 inches (762 mm).

M1305.1.4.3 Electrical requirements. A luminaire controlled by a switch located at the required passageway opening and a receptacle outlet shall be installed at or near the *appliance* location in accordance with Chapter 39. Exposed lamps shall be protected from damage by location or lamp guards.

SECTION M1306
CLEARANCES FROM COMBUSTIBLE CONSTRUCTION

M1306.1 Appliance clearance. *Appliances* shall be installed with the clearances from unprotected combustible materials as indicated on the *appliance label* and in the manufacturer's installation instructions.

M1306.2 Clearance reduction. The reduction of required clearances to combustible assemblies or combustible materials shall be based on Section M1306.2.1 or Section M1306.2.2.

M1306.2.1 Labeled assemblies. The allowable clearance shall be based on an approved reduced clearance protec-

tive assembly that is listed and labeled in accordance with UL 1618.

M1306.2.2 Reduction table. Reduction of clearances shall be in accordance with the *appliance* manufacturer's instructions and Table M1306.2. Forms of protection with ventilated air space shall conform to the following requirements:

1. Not less than 1-inch (25 mm) air space shall be provided between the protection and combustible wall surface.
2. Air circulation shall be provided by having edges of the wall protection open not less than 1 inch (25 mm).
3. If the wall protection is mounted on a single flat wall away from corners, air circulation shall be provided by having the bottom and top edges, or the side and top edges not less than 1 inch (25 mm).
4. Wall protection covering two walls in a corner shall be open at the bottom and top edges not less than 1 inch (25 mm).

M1306.2.3 Solid-fuel appliances. Table M1306.2 shall not be used to reduce the clearance required for solid-fuel *appliances* listed for installation with minimum clearances of 12 inches (305 mm) or less. For *appliances listed* for installation with minimum clearances greater than 12 inches (305 mm), Table M1306.2 shall not be used to reduce the clearance to less than 12 inches (305 mm).

SECTION M1307
APPLIANCE INSTALLATION

M1307.1 General. Installation of *appliances* shall conform to the conditions of their *listing* and *label* and the manufacturer's instructions. The manufacturer's operating and installation instructions shall remain attached to the *appliance*.

M1307.2 Anchorage of appliances. *Appliances* designed to be fixed in position shall be fastened or anchored in an *approved* manner. In Seismic Design Categories D_0, D_1 and D_2, and in townhouses in Seismic Design Category C, water heaters and thermal storage units shall be anchored or strapped to resist horizontal displacement caused by earthquake motion in accordance with one of the following:

1. Anchorage and strapping shall be designed to resist a horizontal force equal to one-third of the operating weight of the water heater storage tank, acting in any horizontal direction. Strapping shall be at points within the upper one-third and lover one-third of the *appliance's* vertical dimensions. At the lower point, the strapping shall maintain a minimum distance of 4 inches (102 mm) above the controls.
2. The anchorage strapping shall be in accordance with the appliance manufacturer's recommendations.

M1307.3 Elevation of ignition source. *Appliances* having an *ignition source* shall be elevated such that the source of ignition is not less than 18 inches (457 mm) above the floor in garages. For the purpose of this section, rooms or spaces that are not part of the *living space* of a *dwelling unit* and that communicate with a private garage through openings shall be considered to be part of the garage.

Exception: Elevation of the ignition source is not required for appliances that are listed as flammable-vapor-ignition resistant.

M1307.3.1 Protection from impact. *Appliances* shall not be installed in a location subject to vehicle damage except where protected by *approved* barriers.

M1307.4 Hydrogen generating and refueling operations. *Ventilation* shall be required in accordance with Section M1307.4.1, M1307.4.2 or M1307.4.3 in private garages that contain hydrogen-generating *appliances* or refueling systems. For the purpose of this section, rooms or spaces that are not part of the *living space* of a *dwelling unit* and that communicate directly with a private garage through openings shall be considered to be part of the private garage.

M1307.4.1 Natural ventilation. Indoor locations intended for hydrogen-generating or refueling operations shall be limited to a maximum floor area of 850 square feet (79 m^2) and shall communicate with the outdoors in accordance with Sections M1307.4.1.1 and M1307.4.1.2. The maximum rated output capacity of hydrogen-generating *appliances* shall not exceed 4 standard cubic feet per minute (1.9 L/s) of hydrogen for each 250 square feet (23 m^2) of floor area in such spaces. The minimum cross-sectional dimension of air openings shall be 3 inches (76 mm). Where ducts are used, they shall be of the same cross-sectional area as the free area of the openings to which they connect. In those locations, *equipment* and *appliances* having an *ignition source* shall be located so that the source of ignition is not within 12 inches (305 mm) of the ceiling.

M1307.4.1.1 Two openings. Two permanent openings shall be constructed within the garage. The upper opening shall be located entirely within 12 inches (305 mm) of the ceiling of the garage. The lower opening shall be located entirely within 12 inches (305 mm) of the floor of the garage. Both openings shall be constructed in the same exterior wall. The openings shall communicate directly with the outdoors and shall have a minimum free area of $^1/_2$ square foot per 1,000 cubic feet (1.7 m^2/1000 m^3) of garage volume.

M1307.4.1.2 Louvers and grilles. In calculating free area required by Section M1307.4.1, the required size of openings shall be based on the net free area of each opening. If the free area through a design of louver or grille is known, it shall be used in calculating the size opening required to provide the free area specified. If the design and free area are not known, it shall be assumed that wood louvers will have a 25-percent free area and metal louvers and grilles will have a 75-percent free area. Louvers and grilles shall be fixed in the open position.

TABLE M1306.2
REDUCTION OF CLEARANCES WITH SPECIFIED FORMS OF PROTECTION[a, c, d, e, f, g, h, i, j, k, l]

TYPE OF PROTECTION APPLIED TO AND COVERING ALL SURFACES OF COMBUSTIBLE MATERIAL WITHIN THE DISTANCE SPECIFIED AS THE REQUIRED CLEARANCE WITH NO PROTECTION (See Figures M1306.1 and M1306.2)	WHERE THE REQUIRED CLEARANCE WITHOUT PROTECTION FROM APPLIANCE, VENT CONNECTOR, OR SINGLE WALL METAL PIPE IS:									
	36 inches		18 inches		12 inches		9 inches		6 inches	
	Allowable clearances with specified protection (Inches)[b]									
	Use column 1 for clearances above an appliance or horizontal connector. Use column 2 for clearances from an appliance, vertical connector and single-wall metal pipe.									
	Above column 1	Sides and rear column 2	Above column 1	Sides and rear column 2	Above column 1	Sides and rear column 2	Above column 1	Sides and rear column 2	Above column 1	Sides and rear column 2
$3^1/_2$-inch-thick masonry wall without ventilated air space	—	24	—	12	—	9	—	6	—	5
$^1/_2$-inch insulation board over 1-inch glass fiber or mineral wool batts	24	18	12	9	9	6	6	5	4	3
Galvanized sheet steel having a minimum thickness of 0.0236-inch (No. 24 gage) over 1-inch glass fiber or mineral wool batts reinforced with wire or rear face with a ventilated air space	18	12	9	6	6	4	5	3	3	3
$3^1/_2$-inch-thick masonry wall with ventilated air space	—	12	—	6	—	6	—	6	—	6
Galvanized sheet steel having a minimum thickness of 0.0236-inch (No. 24 gage) with a ventilated air space 1-inch off the combustible assembly	18	12	9	6	6	4	5	3	3	2
$^1/_2$-inch-thick insulation board with ventilated air space	18	12	9	6	6	4	5	3	3	3
Galvanized sheet steel having a minimum thickness of 0.0236-inch (No. 24 gage) with ventilated air space over 24 gage sheet steel with a ventilated space	18	12	9	6	6	4	5	3	3	3
1-inch glass fiber or mineral wool batts sandwiched between two sheets of galvanized sheet steel having a minimum thickness of 0.0236-inch (No. 24 gage) with a ventilated air space	18	12	9	6	6	4	5	3	3	3

For SI: 1 inch = 25.4 mm, 1 pound per cubic foot = 16.019 kg/m^3, °C = [(°F)-32/1.8], 1 Btu/(h × ft^2 × °F/in.) = 0.001442299 (W/cm^2 × °C/cm).

a. Reduction of clearances from combustible materials shall not interfere with combustion air, draft hood clearance and relief, and accessibility of servicing.

b. Clearances shall be measured from the surface of the heat producing appliance or equipment to the outer surface of the combustible material or combustible assembly.

c. Spacers and ties shall be of noncombustible material. Spacers and ties shall not be used directly opposite appliance or connector.

d. Where all clearance reduction systems use a ventilated air space, adequate provision for air circulation shall be provided as described. (See Figures M1306.1 and M1306.2.)

e. There shall be not less than 1 inch between clearance reduction systems and combustible walls and ceilings for reduction systems using ventilated air space.

f. If a wall protector is mounted on a single flat wall away from corners, adequate air circulation shall be permitted to be provided by leaving only the bottom and top edges or only the side and top edges open with not less than a 1-inch air gap.

g. Mineral wool and glass fiber batts (blanket or board) shall have a minimum density of 8 pounds per cubic foot and a minimum melting point of 1,500°F.

h. Insulation material used as part of a clearance reduction system shall have a thermal conductivity of 1.0 Btu inch per square foot per hour °F or less. Insulation board shall be formed of noncombustible material.

i. There shall be not less than 1 inch between the appliance and the protector. The clearance between the appliance and the combustible surface shall not be reduced below that allowed in this table.

j. All clearances and thicknesses are minimum; larger clearances and thicknesses are acceptable.

k. Listed single-wall connectors shall be permitted to be installed in accordance with the terms of their listing and the manufacturer's instructions.

l. For limitations on clearance reduction for solid-fuel-burning appliances see Section M1306.2.3.

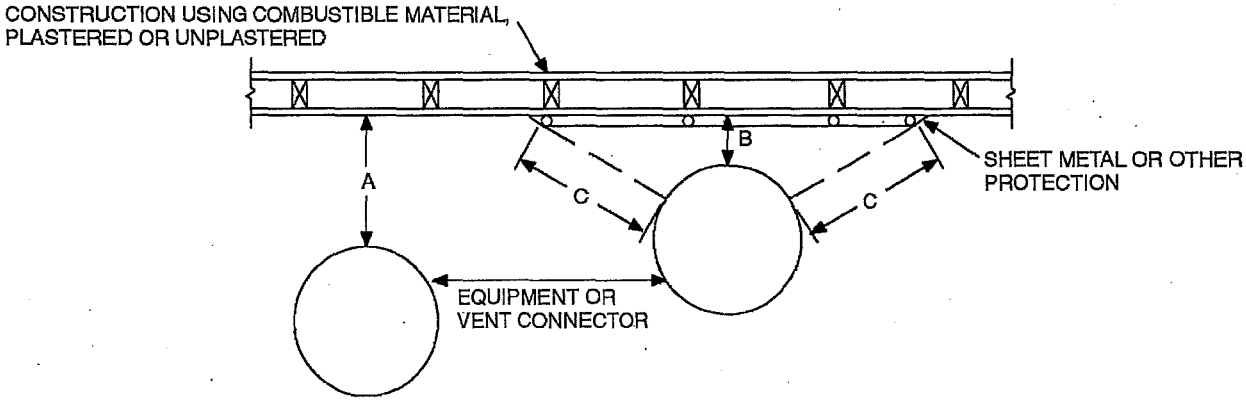

Note: "A" equals the required clearance with no protection. "B" equals the reduced clearance permitted in accordance with Table M1306.2. The protection applied to the construction using combustible material shall extend far enough in each direction to make "C" equal to "A."

FIGURE M1306.1
REDUCED CLEARANCE DIAGRAM

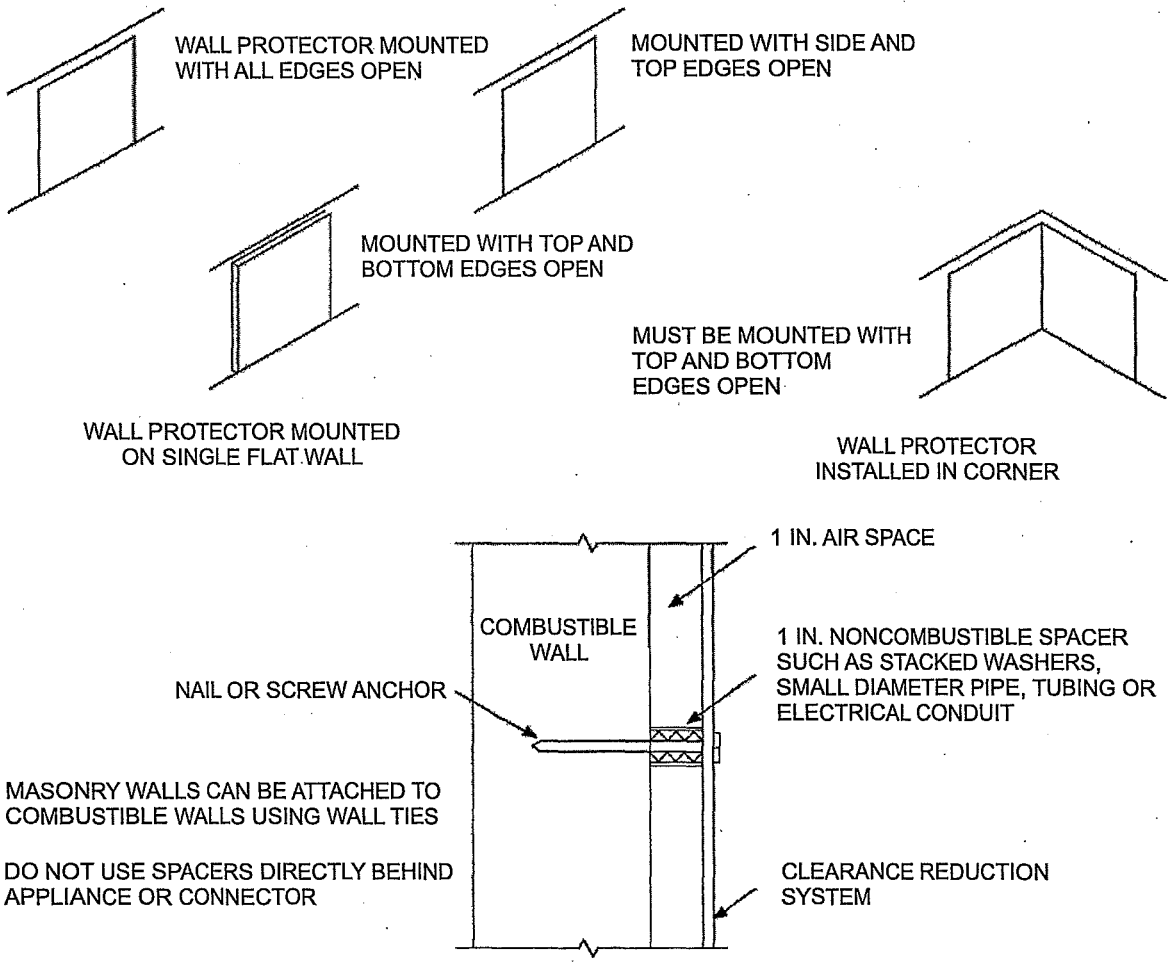

For SI: 1 inch = 25.4 mm.

FIGURE M1306.2
WALL PROTECTOR CLEARANCE REDUCTION SYSTEM

M1307.4.2 Mechanical ventilation. Indoor locations intended for hydrogen-generating or refueling operations shall be ventilated in accordance with Section 502.16 of the *International Mechanical Code*. In these locations, *equipment* and *appliances* having an *ignition source* shall be located so that the source of ignition is below the mechanical *ventilation* outlet(s).

M1307.4.3 Specially engineered installations. As an alternative to the provisions of Sections M1307.4.1 and M1307.4.2, the necessary supply of air for *ventilation* and dilution of flammable gases shall be provided by an *approved* engineered system.

M1307.5 Electrical appliances. Electrical *appliances* shall be installed in accordance with Chapters 14, 15, 19, 20 and 34 through 43 of this code.

M1307.6 Plumbing connections. Potable water and drainage system connections to *equipment* and *appliances* regulated by this code shall be in accordance with Chapters 29 and 30.

SECTION M1308
MECHANICAL SYSTEMS INSTALLATION

M1308.1 Drilling and notching. Wood-framed structural members shall be drilled, notched or altered in accordance with the provisions of Sections R502.8, R602.6, R602.6.1 and R802.7. Holes in load-bearing members of cold-formed steel light-frame construction shall be permitted only in accordance with Sections R505.2.6, R603.2.6 and R804.2.6. In accordance with the provisions of Sections R505.3.5, R603.3.4 and R804.3.3, cutting and notching of flanges and lips of load-bearing members of cold-formed steel light frame construction shall not be permitted. Structural insulated panels (SIPs) shall be drilled and notched or altered in accordance with the provisions of Section R610.7.

M1308.2 Protection against physical damage. Where piping will be concealed within light-frame construction assemblies, the piping shall be protected against penetration by fasteners in accordance with Sections M1308.2.1 through M1308.2.3.

Exception: Cast iron piping and galvanized steel piping shall not be required to be protected.

M1308.2.1 Piping through bored holes or notches. Where *piping* is installed through holes or notches in framing members and is located less than $1^1/_2$ inches (38 mm) from the framing member face to which wall, ceiling or floor membranes will be attached, the pipe shall be protected by shield plates that cover the width of the pipe and the framing member and that extend 2 inches (51 mm) to each side of the framing member. Where the framing member that the piping passes through is a bottom plate, bottom track, top plate or top track, the shield plates shall cover the framing member and extend 2 inches (51 mm) above the bottom framing member and 2 inches (51 mm) below the top framing member.

M1308.2.2 Piping in other locations. Where piping is located within a framing member and is less than $1^1/_2$ inches (38 mm) from the framing member face to which wall, ceiling or floor membranes will be attached, the piping shall be protected by shield plates that cover the width and length of the piping. Where piping is located outside of a framing member and is located less than $1^1/_2$ inches (38 mm) from the nearest edge of the face of the framing member to which the membrane will be attached, the piping shall be protected by shield plates that cover the width and length of the piping.

M1308.2.3 Shield plates. Shield plates shall be of steel material having a thickness of not less than 0.0575 inch (1.463 mm) (No. 16 gage).

CHAPTER 14

HEATING AND COOLING EQUIPMENT AND APPLIANCES

SECTION M1401
GENERAL

M1401.1 Installation. Heating and cooling *equipment* and *appliances* shall be installed in accordance with the manufacturer's instructions and the requirements of this code.

M1401.2 Access. Heating and cooling *equipment* and appliances shall be located with respect to building construction and other *equipment* and appliances to permit maintenance, servicing and replacement. Clearances shall be maintained to permit cleaning of heating and cooling surfaces; replacement of filters, blowers, motors, controls and vent connections; lubrication of moving parts; and adjustments.

Exception: Access shall not be required for ducts, piping, or other components approved for concealment.

M1401.3 Equipment and appliance sizing. Heating and cooling *equipment* and *appliances* shall be sized in accordance with ACCA Manual S or other approved sizing methodologies based on building loads calculated in accordance with ACCA Manual J or other *approved* heating and cooling calculation methodologies.

Exception: Heating and cooling equipment and appliance sizing shall not be limited to the capacities determined in accordance with Manual S where either of the following conditions applies:

1. The specified equipment or appliance utilizes multistage technology or variable refrigerant flow technology and the loads calculated in accordance with the approved heating and cooling calculation methodology are within the range of the manufacturer's published capacities for that equipment or appliance.
2. The specified equipment or appliance manufacturer's published capacities cannot satisfy both the total and sensible heat gains calculated in accordance with the approved heating and cooling calculation methodology and the next larger standard size unit is specified.

M1401.4 Exterior installations. *Equipment* and *appliances* installed outdoors shall be *listed* and *labeled* for outdoor installation. Supports and foundations shall prevent excessive vibration, settlement or movement of the *equipment*. Supports and foundations shall be in accordance with Section M1305.1.4.1.

M1401.5 Flood hazard. In flood hazard areas as established by Table R301.2(1), heating and cooling *equipment* and *appliances* shall be located or installed in accordance with Section R322.1.6.

SECTION M1402
CENTRAL FURNACES

M1402.1 General. Oil-fired central furnaces shall conform to ANSI/UL 727. Electric furnaces shall conform to UL 1995.

M1402.2 Clearances. Clearances shall be provided in accordance with the *listing* and the manufacturer's installation instructions.

M1402.3 Combustion air. *Combustion air* shall be supplied in accordance with Chapter 17. *Combustion air* openings shall be unobstructed for a distance of not less than 6 inches (152 mm) in front of the openings.

SECTION M1403
HEAT PUMP EQUIPMENT

M1403.1 Heat pumps. Electric heat pumps shall be listed and labeled in accordance with UL 1995 or UL/CSA/ANCE 60335-2-40.

SECTION M1404
REFRIGERATION COOLING EQUIPMENT

M1404.1 Compliance. Refrigeration cooling *equipment* shall comply with Section M1411.

SECTION M1405
BASEBOARD CONVECTORS

M1405.1 General. Electric baseboard convectors shall be installed in accordance with the manufacturer's instructions and Chapters 34 through 43 of this code. Electric baseboard heaters shall be listed and labeled in accordance with UL 1042.

SECTION M1406
RADIANT HEATING SYSTEMS

M1406.1 General. Electric radiant heating systems shall be installed in accordance with the manufacturer's instructions and Chapters 34 through 43 of this code and shall be listed for the application.

M1406.2 Clearances. Clearances for radiant heating panels or elements to any wiring, outlet boxes and junction boxes used for installing electrical devices or mounting luminaires shall comply with Chapters 34 through 43 of this code.

M1406.3 Installation of radiant panels. Radiant panels installed on wood framing shall conform to the following requirements:

1. Heating panels shall be installed parallel to framing members and secured to the surface of framing members or mounted between framing members.
2. Mechanical fasteners shall penetrate only the unheated portions provided for this purpose. Panels shall not be fastened at any point closer than $^1/_4$ inch (6.4 mm) to an element. Other methods of attachment of the panels shall be in accordance with the panel manufacturer's instructions.
3. Unless *listed* and *labeled* for field cutting, heating panels shall be installed as complete units.

M1406.4 Installation in concrete or masonry. Radiant heating systems installed in concrete or masonry shall conform to the following requirements:

1. Radiant heating systems shall be identified as being suitable for the installation, and shall be secured in place as specified in the manufacturer's installation instructions.
2. Radiant heating panels or radiant heating panel sets shall not be installed where they bridge expansion joints unless protected from expansion and contraction.

M1406.5 Finish surfaces. Finish materials installed over radiant heating panels or systems shall be installed in accordance with the manufacturer's instructions. Surfaces shall be secured so that nails or other fastenings do not pierce the radiant heating elements.

SECTION M1407
DUCT HEATERS

M1407.1 General. Electric duct heaters shall be installed in accordance with the manufacturer's instructions and Chapters 34 through 43 of this code. Electric duct heaters shall comply with UL 1996.

M1407.2 Installation. Electric duct heaters shall be installed so that they will not create a fire hazard. Class 1 ducts, duct coverings and linings shall be interrupted at each heater to provide the clearances specified in the manufacturer's installation instructions. Such interruptions are not required for duct heaters *listed* and *labeled* for zero clearance to combustible materials. Insulation installed in the immediate area of each heater shall be classified for the maximum temperature produced on the duct surface.

M1407.3 Installation with heat pumps and air conditioners. Duct heaters located within 4 feet (1219 mm) of a heat pump or air conditioner shall be *listed* and *labeled* for such installations. The heat pump or air conditioner shall additionally be *listed* and *labeled* for such duct heater installations.

M1407.4 Access. Duct heaters shall be accessible for servicing, and clearance shall be maintained to permit adjustment, servicing and replacement of controls and heating elements.

M1407.5 Fan interlock. The fan circuit shall be provided with an interlock to prevent heater operation when the fan is not operating.

SECTION M1408
VENTED FLOOR FURNACES

M1408.1 General. Oil-fired vented floor furnaces shall comply with UL 729 and shall be installed in accordance with their *listing*, the manufacturer's instructions and the requirements of this code.

M1408.2 Clearances. Vented floor furnaces shall be installed in accordance with their listing and the manufacturer's instructions.

M1408.3 Location. Location of floor furnaces shall conform to the following requirements:

1. Floor registers of floor furnaces shall be installed not less than 6 inches (152 mm) from a wall.
2. Wall registers of floor furnaces shall be installed not less than 6 inches (152 mm) from the adjoining wall at inside corners.
3. The furnace register shall be located not less than 12 inches (305 mm) from doors in any position, draperies or similar combustible objects.
4. The furnace register shall be located not less than 5 feet (1524 mm) below any projecting combustible materials.
5. The floor furnace burner assembly shall not project into an occupied under-floor area.
6. The floor furnace shall not be installed in concrete floor construction built on grade.
7. The floor furnace shall not be installed where a door can swing within 12 inches (305 mm) of the grille opening.

M1408.4 Access. An opening in the foundation not less than 18 inches by 24 inches (457 mm by 610 mm), or a trap door not less than 22 inches by 30 inches (559 mm by 762 mm) shall be provided for access to a floor furnace. The opening and passageway shall be large enough to allow replacement of any part of the *equipment*.

M1408.5 Installation. Floor furnace installations shall conform to the following requirements:

1. Thermostats controlling floor furnaces shall be located in the room in which the register of the floor furnace is located.
2. Floor furnaces shall be supported independently of the furnace floor register.
3. Floor furnaces shall be installed not closer than 6 inches (152 mm) to the ground. The minimum clearance shall be 2 inches (51 mm), where the lower 6 inches (152 mm) of the furnace is sealed to prevent water entry.
4. Where excavation is required for a floor furnace installation, the excavation shall extend 30 inches (762 mm) beyond the control side of the floor furnace and 12 inches (305 mm) beyond the remaining sides. Excavations shall slope outward from the perimeter of the base of the excavation to the surrounding *grade* at an angle not exceeding 45 degrees (0.79 rad) from horizontal.
5. Floor furnaces shall not be supported from the ground.

SECTION M1409
VENTED WALL FURNACES

M1409.1 General. Oil-fired vented wall furnaces shall comply with UL 730 and shall be installed in accordance with their *listing*, the manufacturer's instructions and the requirements of this code.

M1409.2 Location. The location of vented wall furnaces shall conform to the following requirements:

1. Vented wall furnaces shall be located where they will not cause a fire hazard to walls, floors, combustible furnishings or doors. Vented wall furnaces installed between bathrooms and adjoining rooms shall not circulate air from bathrooms to other parts of the building.
2. Vented wall furnaces shall not be located where a door can swing within 12 inches (305 mm) of the furnace air inlet or outlet measured at right angles to the opening. Doorstops or door closers shall not be installed to obtain this clearance.

M1409.3 Installation. Vented wall furnace installations shall conform to the following requirements:

1. Required wall thicknesses shall be in accordance with the manufacturer's installation instructions.
2. Ducts shall not be attached to a wall furnace. Casing extensions or boots shall be installed only where listed as part of a *listed* and *labeled appliance*.
3. A manual shut off valve shall be installed ahead of all controls.

M1409.4 Access. Vented wall furnaces shall be provided with access for cleaning of heating surfaces; removal of burners; replacement of sections, motors, controls, filters and other working parts; and for adjustments and lubrication of parts requiring such attention. Panels, grilles and access doors that must be removed for normal servicing operations shall not be attached to the building construction.

SECTION M1410
VENTED ROOM HEATERS

M1410.1 General. Vented room heaters shall be tested in accordance with ASTM E 1509 for pellet-fuel burning, UL 896 for oil-fired or UL 1482 for solid fuel-fired and installed in accordance with their *listing*, the manufacturer's installation instructions and the requirements of this code.

M1410.2 Floor mounting. Room heaters shall be installed on noncombustible floors or *approved* assemblies constructed of noncombustible materials that extend not less than 18 inches (457 mm) beyond the *appliance* on all sides.

Exceptions:

1. *Listed* room heaters shall be installed on noncombustible floors, assemblies constructed of noncombustible materials or floor protectors *listed* and *labeled* in accordance with UL 1618. The materials and dimensions shall be in accordance with the *appliance* manufacturer's instructions.
2. Room heaters *listed* for installation on combustible floors without floor protection shall be installed in accordance with the *appliance* manufacturer's instructions.

SECTION M1411
HEATING AND COOLING EQUIPMENT

M1411.1 Approved refrigerants. Refrigerants used in direct refrigerating systems shall conform to the applicable provisions of ANSI/ASHRAE 34.

M1411.2 Refrigeration coils in warm-air furnaces. Where a cooling coil is located in the supply plenum of a warm-air furnace, the furnace blower shall be rated at not less than 0.5-inch water column (124 Pa) static pressure unless the furnace is *listed* and *labeled* for use with a cooling coil. Cooling coils shall not be located upstream from heat exchangers unless *listed* and *labeled* for such use. Conversion of existing furnaces for use with cooling coils shall be permitted provided the furnace will operate within the temperature rise specified for the furnace.

M1411.3 Condensate disposal. Condensate from cooling coils and evaporators shall be conveyed from the drain pan outlet to an *approved* place of disposal. Such piping shall maintain a minimum horizontal slope in the direction of discharge of not less than $^1/_8$ unit vertical in 12 units horizontal (1-percent slope). Condensate shall not discharge into a street, alley or other areas where it would cause a nuisance.

M1411.3.1 Auxiliary and secondary drain systems. In addition to the requirements of Section M1411.3, a secondary drain or auxiliary drain pan shall be required for each cooling or evaporator coil where damage to any building components will occur as a result of overflow from the *equipment* drain pan or stoppage in the condensate drain piping. Such piping shall maintain a minimum horizontal slope in the direction of discharge of not less than $^1/_8$ unit vertical in 12 units horizontal (1-percent slope). Drain piping shall be not less than $^3/_4$-inch (19 mm) nominal pipe size. One of the following methods shall be used:

1. An auxiliary drain pan with a separate drain shall be installed under the coils on which condensation will occur. The auxiliary pan drain shall discharge to a conspicuous point of disposal to alert occupants in the event of a stoppage of the primary drain. The pan shall have a minimum depth of 1.5 inches (38 mm), shall be not less than 3 inches (76 mm) larger than the unit or the coil dimensions in width and length and shall be constructed of corrosion-resistant material. Galvanized sheet steel pans shall have a minimum thickness of not less than 0.0236-inch (0.6010 mm) (No. 24 Gage). Nonmetallic pans shall have a minimum thickness of not less than 0.0625 inch (1.6 mm).
2. A separate overflow drain line shall be connected to the drain pan installed with the *equipment*. This overflow drain shall discharge to a conspicuous point of disposal to alert occupants in the event of a stoppage of the primary drain. The overflow drain line shall connect to the drain pan at a higher level than the primary drain connection.

3. An auxiliary drain pan without a separate drain line shall be installed under the coils on which condensation will occur. This pan shall be equipped with a water level detection device conforming to UL 508 that will shut off the *equipment* served prior to overflow of the pan. The pan shall be equipped with a fitting to allow for drainage. The auxiliary drain pan shall be constructed in accordance with Item 1 of this section.
4. A water level detection device conforming to UL 508 shall be installed that will shut off the *equipment* served in the event that the primary drain is blocked. The device shall be installed in the primary drain line, the overflow drain line or the *equipment*-supplied drain pan, located at a point higher than the primary drain line connection and below the overflow rim of such pan.

M1411.3.1.1 Water-level monitoring devices. On down-flow units and other coils that do not have secondary drain or provisions to install a secondary or auxiliary drain pan, a water-level monitoring device shall be installed inside the primary drain pan. This device shall shut off the equipment served in the event that the primary drain becomes restricted. Devices shall not be installed in the drain line.

M1411.3.2 Drain pipe materials and sizes. Components of the condensate disposal system shall be ABS, cast iron, copper, cross-linked polyethylene, CPVC, galvanized steel, PE-RT, polyethylene, polypropylene or PVC pipe or tubing. Components shall be selected for the pressure and temperature rating of the installation. Joints and connections shall be made in accordance with the applicable provisions of Chapter 30. Condensate waste and drain line size shall be not less than $^3/_4$-inch (19 mm) nominal diameter from the drain pan connection to the place of condensate disposal. Where the drain pipes from more than one unit are manifolded together for condensate drainage, the pipe or tubing shall be sized in accordance with an *approved* method.

M1411.3.3 Drain line maintenance. Condensate drain lines shall be configured to permit the clearing of blockages and performance of maintenance without requiring the drain line to be cut.

M1411.3.4 Appliances, equipment and insulation in pans. Where *appliances, equipment* or insulation are subject to water damage when auxiliary drain pans fill, those portions of the *appliances, equipment* and insulation shall be installed above the flood level rim of the pan. Supports located inside of the pan to support the *appliance* or *equipment* shall be water resistant and *approved.*

M1411.4 Condensate pumps. Condensate pumps located in uninhabitable spaces, such as attics and crawl spaces, shall be connected to the appliance or equipment served such that when the pump fails, the appliance or equipment will be prevented from operating. Pumps shall be installed in accordance with the manufacturer's instructions.

M1411.5 Auxiliary drain pan. Category IV condensing *appliances* shall have an auxiliary drain pan where damage to any building component will occur as a result of stoppage in the condensate drainage system. These pans shall be installed in accordance with the applicable provisions of Section M1411.3.

Exception: Fuel-fired *appliances* that automatically shut down operation in the event of a stoppage in the condensate drainage system.

M1411.6 Insulation of refrigerant piping. Piping and fittings for refrigerant vapor (suction) lines shall be insulated with insulation having a thermal resistivity of not less than R-4 and having external surface permeance not exceeding 0.05 perm [2.87 ng/(s · m^2 · Pa)] when tested in accordance with ASTM E 96.

M1411.7 Location and protection of refrigerant piping. Refrigerant piping installed within $1^1/_2$ inches (38 mm) of the underside of roof decks shall be protected from damage caused by nails and other fasteners.

M1411.8 Locking access port caps. Refrigerant circuit access ports located outdoors shall be fitted with locking-type tamper-resistant caps or shall be otherwise secured to prevent unauthorized access.

SECTION M1412
ABSORPTION COOLING EQUIPMENT

M1412.1 Approval of equipment. Absorption systems shall be installed in accordance with the manufacturer's instructions. Absorption equipment shall comply with UL 1995 or UL/CSA/ANCE 60335-2-40.

M1412.2 Condensate disposal. Condensate from the cooling coil shall be disposed of as provided in Section M1411.3.

M1412.3 Insulation of piping. Refrigerant piping, brine piping and fittings within a building shall be insulated to prevent condensation from forming on piping.

M1412.4 Pressure-relief protection. Absorption systems shall be protected by a pressure-relief device. Discharge from the pressure-relief device shall be located where it will not create a hazard to persons or property.

SECTION M1413
EVAPORATIVE COOLING EQUIPMENT

M1413.1 General. Evaporative cooling equipment and appliances shall comply with UL 1995 or UL/CSA/ANCE 60335-2-40 and shall be installed:

1. In accordance with the manufacturer's instructions.
2. On level platforms in accordance with Section M1305.1.4.1.
3. So that openings in exterior walls are flashed in accordance with Section R703.4.
4. So as to protect the potable water supply in accordance with Section P2902.
5. So that air intake opening locations are in accordance with Section R303.5.1.

SECTION M1414
FIREPLACE STOVES

M1414.1 General. Fireplace stoves shall be *listed, labeled* and installed in accordance with the terms of the listing. Fireplace stoves shall be tested in accordance with UL 737.

M1414.2 Hearth extensions. Hearth extensions for fireplace stoves shall be installed in accordance with the *listing* of the fireplace stove. The supporting structure for a hearth extension for a fireplace stove shall be at the same level as the supporting structure for the fireplace unit. The hearth extension shall be readily distinguishable from the surrounding floor area.

SECTION M1415
MASONRY HEATERS

M1415.1 General. Masonry heaters shall be constructed in accordance with Section R1002.

CHAPTER 15

EXHAUST SYSTEMS

SECTION M1501
GENERAL

M1501.1 Outdoor discharge. The air removed by every mechanical exhaust system shall be discharged to the outdoors in accordance with Section M1506.2. Air shall not be exhausted into an attic, soffit, ridge vent or crawl space.

Exception: Whole-house *ventilation*-type *attic* fans that discharge into the *attic* space of *dwelling units* having private *attics* shall be permitted.

SECTION M1502
CLOTHES DRYER EXHAUST

M1502.1 General. Clothes dryers shall be exhausted in accordance with the manufacturer's instructions.

M1502.2 Independent exhaust systems. Dryer exhaust systems shall be independent of all other systems and shall convey the moisture to the outdoors.

Exception: This section shall not apply to *listed* and *labeled* condensing (ductless) clothes dryers.

M1502.3 Duct termination. Exhaust ducts shall terminate on the outside of the building. Exhaust duct terminations shall be in accordance with the dryer manufacturer's installation instructions. If the manufacturer's instructions do not specify a termination location, the exhaust duct shall terminate not less than 3 feet (914 mm) in any direction from openings into buildings. Exhaust duct terminations shall be equipped with a backdraft damper. Screens shall not be installed at the duct termination.

M1502.4 Dryer exhaust ducts. Dryer exhaust ducts shall conform to the requirements of Sections M1502.4.1 through M1502.4.7.

M1502.4.1 Material and size. Exhaust ducts shall have a smooth interior finish and be constructed of metal having a minimum thickness of 0.0157 inches (0.3950 mm) (No. 28 gage). The duct shall be 4 inches (102 mm) nominal in diameter.

M1502.4.2 Duct installation. Exhaust ducts shall be supported at intervals not to exceed 12 feet (3658 mm) and shall be secured in place. The insert end of the duct shall extend into the adjoining duct or fitting in the direction of airflow. Exhaust duct joints shall be sealed in accordance with Section M1601.4.1 and shall be mechanically fastened. Ducts shall not be joined with screws or similar fasteners that protrude more than $^1/_8$ inch (3.2 mm) into the inside of the duct.

M1502.4.3 Transition duct. Transition ducts used to connect the dryer to the exhaust *duct system* shall be a single length that is *listed* and *labeled* in accordance with UL 2158A. Transition ducts shall be not greater than 8 feet (2438 mm) in length. Transition ducts shall not be concealed within construction.

M1502.4.4 Dryer exhaust duct power ventilators. Domestic dryer exhaust duct power ventilators shall conform to UL 705 for use in dryer exhaust duct systems. The dryer exhaust duct power ventilator shall be installed in accordance with the manufacturer's instructions.

M1502.4.5 Duct length. The maximum allowable exhaust duct length shall be determined by one of the methods specified in Sections M1502.4.5.1 through M1502.4.5.3.

M1502.4.5.1 Specified length. The maximum length of the exhaust duct shall be 35 feet (10 668 mm) from the connection to the transition duct from the dryer to the outlet terminal. Where fittings are used, the maximum length of the exhaust duct shall be reduced in accordance with Table M1502.4.5.1. The maximum length of the exhaust duct does not include the transition duct.

M1502.4.5.2 Manufacturer's instructions. The size and maximum length of the exhaust duct shall be determined by the dryer manufacturer's installation instructions. The code official shall be provided with a copy of the installation instructions for the make and model of the dryer at the concealment inspection. In the absence

TABLE M1502.4.5.1
DRYER EXHAUST DUCT FITTING EQUIVALENT LENGTH

DRYER EXHAUST DUCT FITTING TYPE	EQUIVALENT LENGTH
4 inch radius mitered 45 degree elbow	2 feet 6 inches
4 inch radius mitered 90 degree elbow	5 feet
6 inch radius smooth 45 degree elbow	1 foot
6 inch radius smooth 90 degree elbow	1 foot 9 inches
8 inch radius smooth 45 degree elbow	1 foot
8 inch radius smooth 90 degree elbow	1 foot 7 inches
10 inch radius smooth 45 degree elbow	9 inches
10 inch radius smooth 90 degree elbow	1 foot 6 inches

For SI: 1 inch = 25.4 mm, 1 foot = 304.8 mm, 1 degree = 0.0175 rad.

of fitting equivalent length calculations from the clothes dryer manufacturer, Table M1502.4.4.1 shall be used.

M1502.4.5.3 Dryer exhaust duct power ventilator. The maximum length of the exhaust duct shall be determined in accordance with the manufacturer's instructions for the dryer exhaust duct power ventilator.

M1502.4.6 Length identification. Where the exhaust duct equivalent length exceeds 35 feet (10 668 mm), the equivalent length of the exhaust duct shall be identified on a permanent label or tag. The label or tag shall be located within 6 feet (1829 mm) of the exhaust duct connection.

M1502.4.7 Exhaust duct required. Where space for a clothes dryer is provided, an exhaust *duct system* shall be installed. Where the clothes dryer is not installed at the time of occupancy the exhaust duct shall be capped or plugged in the space in which it originates and identified and marked "future use."

Exception: Where a *listed* condensing clothes dryer is installed prior to occupancy of the structure.

M1502.5 Protection required. Protective shield plates shall be placed where nails or screws from finish or other work are likely to penetrate the clothes dryer exhaust duct. Shield plates shall be placed on the finished face of framing members where there is less than $1^1/_4$ inches (32 mm) between the duct and the finished face of the framing member. Protective shield plates shall be constructed of steel, shall have a minimum thickness of 0.062-inch (1.6 mm) and shall extend not less than 2 inches (51 mm) above sole plates and below top plates.

SECTION M1503
RANGE HOODS

M1503.1 General. Range hoods shall discharge to the outdoors through a duct. The duct serving the hood shall have a smooth interior surface, shall be air tight, shall be equipped with a back-draft damper and shall be independent of all other exhaust systems. Ducts serving range hoods shall not terminate in an attic or crawl space or areas inside the building.

Exception: Where installed in accordance with the manufacturer's instructions, and where mechanical or natural *ventilation* is otherwise provided, *listed* and *labeled* ductless range hoods shall not be required to discharge to the outdoors.

M1503.2 Duct material. Ducts serving range hoods shall be constructed of galvanized steel, stainless steel or copper.

Exception: Ducts for domestic kitchen cooking *appliances* equipped with down-draft exhaust systems shall be permitted to be constructed of schedule 40 PVC pipe and fittings provided that the installation complies with all of the following:

1. The duct is installed under a concrete slab poured on grade.
2. The underfloor trench in which the duct is installed is completely backfilled with sand or gravel.
3. The PVC duct extends not more than 1 inch (25 mm) above the indoor concrete floor surface.
4. The PVC duct extends not more than 1 inch (25 mm) above grade *outside of the building.*
5. The PVC ducts are solvent cemented.

M1503.3 Kitchen exhaust rates. Where domestic kitchen cooking *appliances* are equipped with ducted range hoods or down-draft exhaust systems, the fans shall be sized in accordance with Section M1507.4.

M1503.4 Makeup air required. Exhaust hood systems capable of exhausting in excess of 400 cubic feet per minute (0.19 m^3/s) shall be mechanically or naturally provided with makeup air at a rate approximately equal to the exhaust air rate. Such makeup air systems shall be equipped with not less than one damper. Each damper shall be a gravity damper or an electrically operated damper that automatically opens when the exhaust system operates. Dampers shall be accessible for inspection, service, repair and replacement without removing permanent construction or any other ducts not connected to the damper being inspected, serviced, repaired or replaced.

M1503.4.1 Location. Kitchen exhaust makeup air shall be discharged into the same room in which the exhaust system is located or into rooms or *duct systems* that communicate through one or more permanent openings with the room in which such exhaust system is located. Such permanent openings shall have a net cross-sectional area not less than the required area of the makeup air supply openings.

SECTION M1504
INSTALLATION OF MICROWAVE OVENS

M1504.1 Installation of a microwave oven over a cooking appliance. The installation of a *listed* and *labeled* cooking *appliance* or microwave oven over a *listed* and *labeled* cooking *appliance* shall conform to the terms of the upper *appliance's listing* and *label* and the manufacturer's installation instructions. The microwave oven shall conform to UL 923.

SECTION M1505
OVERHEAD EXHAUST HOODS

M1505.1 General. Domestic open-top broiler units shall have a metal exhaust hood, having a minimum thickness of 0.0157-inch (0.3950 mm) (No. 28 gage) with $^1/_4$ inch (6.4 mm) clearance between the hood and the underside of combustible material or cabinets. A clearance of not less than 24 inches (610 mm) shall be maintained between the cooking surface and the combustible material or cabinet. The hood shall be not less than the width of the broiler unit, extend over the entire unit, discharge to the outdoors and be equipped with a backdraft damper or other means to control infiltration/exfiltration when not in operation. Broiler units incorporating an integral exhaust system, and *listed* and *labeled* for use without an exhaust hood, need not have an exhaust hood.

SECTION M1506
EXHAUST DUCTS AND EXHAUST OPENINGS

M1506.1 Duct construction. Where exhaust duct construction is not specified in this chapter, construction shall comply with Chapter 16.

M1506.2 Duct length. The length of exhaust and supply ducts used with ventilating equipment shall not exceed the lengths determined in accordance with Table M1506.2.

Exception: Duct length shall not be limited where the duct system complies with the manufacturer's design criteria or where the flow rate of the installed ventilating equipment is verified by the installer or approved third party using a flow hood, flow grid or other airflow measuring device.

M1506.3 Exhaust openings. Air exhaust openings shall terminate not less than 3 feet (914 mm) from property lines; 3 feet (914 mm) from operable and nonoperable openings into the building and 10 feet (3048 mm) from mechanical air intakes except where the opening is located 3 feet (914 mm) above the air intake. Openings shall comply with Sections R303.5.2 and R303.6.

SECTION M1507
MECHANICAL VENTILATION

M1507.1 General. Where local exhaust or whole-house mechanical ventilation is provided, the equipment shall be designed in accordance with this section.

M1507.2 Recirculation of air. Exhaust air from bathrooms and toilet rooms shall not be recirculated within a residence or to another *dwelling unit* and shall be exhausted directly to the outdoors. Exhaust air from bathrooms and toilet rooms shall not discharge into an *attic*, crawl space or other areas inside the building.

M1507.3 Whole-house mechanical ventilation system. Whole-house mechanical ventilation systems shall be designed in accordance with Sections M1507.3.1 through M1507.3.3.

M1507.3.1 System design. The whole-house ventilation system shall consist of one or more supply or exhaust fans, or a combination of such, and associated ducts and controls. Local exhaust or supply fans are permitted to serve as such a system. Outdoor air ducts connected to the return side of an air handler shall be considered as providing supply ventilation.

M1507.3.2 System controls. The whole-house mechanical ventilation system shall be provided with controls that enable manual override.

M1507.3.3 Mechanical ventilation rate. The whole-house mechanical ventilation system shall provide outdoor air at a continuous rate of not less than that determined in accordance with Table M1507.3.3(1).

Exception: The whole-house mechanical ventilation system is permitted to operate intermittently where the system has controls that enable operation for not less than 25-percent of each 4-hour segment and the ventilation rate prescribed in Table M1507.3.3(1) is multiplied by the factor determined in accordance with Table M1507.3.3(2).

TABLE M1506.2
DUCT LENTH

DUCT TYPE	FLEX DUCT								SMOOTH-WALL DUCT							
Fan airflow rating (CFM @ 0.25 inch wc[a])	50	80	100	125	150	200	250	300	50	80	100	125	150	200	250	300
Diameter[b] (inches)	Maximum length[c, d, e] (feet)															
3	X	X	X	X	X	X	X	X	5	X	X	X	X	X	X	X
4	56	4	X	X	X	X	X	X	114	31	10	X	X	X	X	X
5	NL	81	42	16	2	X	X	X	NL	152	91	51	28	4	X	X
6	NL	NL	158	91	55	18	1	X	NL	NL	NL	168	112	53	25	9
7	NL	NL	NL	NL	161	78	40	19	NL	NL	NL	NL	NL	148	88	54
8 and above	NL	NL	NL	NL	NL	189	111	69	NL	NL	NL	NL	NL	NL	198	133

For SI: 1 foot = 304.8 mm.

a. Fan airflow rating shall be in acordance with ANSI/AMCA 210-ANSI/ASHRAE 51.

b. For noncircular ducts, calculate the diameter as four times the cross-sectional area divided by the perimeter.

c. This table assumes that elbows are not used. Fifteen feet of allowable duct length shall be deducted for each elbow installed in the duct run.

d. NL = no limit on duct length of this size.

e. X = not allowed. Any length of duct of this size with assumed turns and fittings will exceed the rated pressure drop.

TABLE M1507.3.3(1)
CONTINUOUS WHOLE-HOUSE MECHANICAL VENTILATION SYSTEM AIRFLOW RATE REQUIREMENTS

DWELLING UNIT FLOOR AREA (square feet)	NUMBER OF BEDROOMS				
	0 – 1	2 – 3	4 – 5	6 – 7	> 7
	Airflow in CFM				
< 1,500	30	45	60	75	90
1,501 – 3,000	45	60	75	90	105
3,001 – 4,500	60	75	90	105	120
4,501 – 6,000	75	90	105	120	135
6,001 – 7,500	90	105	120	135	150
> 7,500	105	120	135	150	165

For SI: 1 square foot = 0.0929 m^2, 1 cubic foot per minute = 0.0004719 m^3/s.

TABLE M1507.3.3(2)
INTERMITTENT WHOLE-HOUSE MECHANICAL VENTILATION RATE FACTORS[a, b]

RUN-TIME PERCENTAGE IN EACH 4-HOUR SEGMENT	25%	33%	50%	66%	75%	100%
Factor[a]	4	3	2	1.5	1.3	1.0

a. For ventilation system run time values between those given, the factors are permitted to be determined by interpolation.
b. Extrapolation beyond the table is prohibited.

M1507.4 Local exhaust rates. *Local exhaust* systems shall be designed to have the capacity to exhaust the minimum air flow rate determined in accordance with Table M1507.4.

TABLE M1507.4
MINIMUM REQUIRED LOCAL EXHAUST RATES FOR ONE- AND TWO-FAMILY DWELLINGS

AREA TO BE EXHAUSTED	EXHAUST RATES
Kitchens	100 cfm intermittent or 25 cfm continuous
Bathrooms-Toilet Rooms	Mechanical exhaust capacity of 50 cfm intermittent or 20 cfm continuous

For SI: 1 cubic foot per minute = 0.0004719 m^3/s.

CHAPTER 16

DUCT SYSTEMS

SECTION M1601
DUCT CONSTRUCTION

M1601.1 Duct design. *Duct systems* serving heating, cooling and *ventilation equipment* shall be installed in accordance with the provisions of this section and ACCA Manual D, the appliance manufacturer's installation instructions or other *approved* methods.

M1601.1.1 Above-ground duct systems. Above-ground *duct systems* shall conform to the following:

1. *Equipment* connected to *duct systems* shall be designed to limit discharge air temperature to not greater than 250°F (121°C).
2. Factory-made ducts shall be listed and labeled in accordance with UL 181 and installed in accordance with the manufacturer's instructions.
3. Fibrous glass duct construction shall conform to the SMACNA *Fibrous Glass Duct Construction Standards* or NAIMA *Fibrous Glass Duct Construction Standards*.
4. Field-fabricated and shop-fabricated metal and flexible duct constructions shall conform to the SMACNA HVAC *Duct Construction Standards—Metal and Flexible* except as allowed by Table M1601.1.1. Galvanized steel shall conform to ASTM A 653.
5. The use of gypsum products to construct return air ducts or plenums is permitted, provided that the air temperature does not exceed 125°F (52°C) and exposed surfaces are not subject to condensation.
6. *Duct systems* shall be constructed of materials having a flame spread index of not greater than 200.
7. Stud wall cavities and the spaces between solid floor joists to be used as air plenums shall comply with the following conditions:
   - 7.1. These cavities or spaces shall not be used as a plenum for supply air.
   - 7.2. These cavities or spaces shall not be part of a required fire-resistance-rated assembly.
   - 7.3. Stud wall cavities shall not convey air from more than one floor level.
   - 7.4. Stud wall cavities and joist-space plenums shall be isolated from adjacent concealed spaces by tight-fitting fireblocking in accordance with Section R602.8.
   - 7.5. Stud wall cavities in the outside walls of building envelope assemblies shall not be utilized as air plenums.

M1601.1.2 Underground duct systems. Underground *duct systems* shall be constructed of *approved* concrete, clay, metal or plastic. The maximum duct temperature for plastic ducts shall not be greater than 150°F (66°C). Metal ducts shall be protected from corrosion in an *approved* manner or shall be completely encased in concrete not less than 2 inches (51 mm) thick. Nonmetallic ducts shall be installed in accordance with the manufacturer's instructions. Plastic pipe and fitting materials shall conform to cell classification 12454-B of ASTM D 1248 or ASTM D 1784 and external loading properties of ASTM D 2412. Ducts shall slope to an accessible point for drainage. Where encased in concrete, ducts shall be sealed and secured prior to any concrete being poured. Metallic ducts having an *approved* protective coating and nonmetallic ducts shall be installed in accordance with the manufacturer's instructions.

M1601.2 Vibration isolators. Vibration isolators installed between mechanical *equipment* and metal ducts shall be fabricated from *approved* materials and shall not exceed 10 inches (254 mm) in length.

M1601.3 Duct insulation materials. Duct insulation materials shall conform to the following requirements:

1. Duct coverings and linings, including adhesives where used, shall have a flame spread index not higher than 25, and a smoke-developed index not over 50 when tested in accordance with ASTM E 84 or UL 723, using the specimen preparation and mounting procedures of ASTM E 2231.

   Exception: Spray application of polyurethane foam to the exterior of ducts in *attics* and crawl spaces shall be permitted subject to all of the following:

   1. The flame spread index is not greater than 25 and the smoke-developed index is not greater than 450 at the specified installed thickness.
   2. The foam plastic is protected in accordance with the ignition barrier requirements of Sections R316.5.3 and R316.5.4.
   3. The foam plastic complies with the requirements of Section R316.

2. Duct coverings and linings shall not flame, glow, smolder or smoke when tested in accordance with ASTM C 411 at the temperature to which they are exposed in service. The test temperature shall not fall below 250°F (121°C). Coverings and linings shall be listed and labeled.

TABLE M1601.1.1
DUCT CONSTRUCTION MINIMUM SHEET METAL THICKNESS FOR SINGLE DWELLING UNITS[a]

ROUND DUCT DIAMETER (inches)	STATIC PRESSURE			
	½ inch water gage		1 inch water gage	
	Thickness (inches)		Thickness (inches)	
	Galvanized	Aluminum	Galvanized	Aluminum
≤ 12	0.013	0.018	0.013	0.018
12 to 14	0.013	0.018	0.016	0.023
15 to 17	0.016	0.023	0.019	0.027
18	0.016	0.023	0.024	0.034
19 to 20	0.019	0.027	0.024	0.034
RECTANGULAR DUCT DIMENSION (inches)	**STATIC PRESSURE**			
	½ inch water gage		1 inch water gage	
	Thickness (inches)		Thickness (inches)	
	Galvanized	Aluminum	Galvanized	Aluminum
≤ 8	0.013	0.018	0.013	0.018
9 to 10	0.013	0.018	0.016	0.023
11 to 12	0.016	0.023	0.019	0.027
13 to 16	0.019	0.027	0.019	0.027
17 to 18	0.019	0.027	0.024	0.034
19 to 20	0.024	0.034	0.024	0.034

For SI: 1 inch = 25.4 mm, 1 inch water gage = 249 Pa.

a. Ductwork that exceeds 20 inches by dimension or exceeds a pressure of 1 inch water gage (250 Pa) shall be constructed in accordance with *SMACNA HVAC Duct Construction Standards Metal and Flexible.*

3. External reflective duct insulation shall be legibly printed or identified at intervals not greater than 36 inches (914 mm) with the name of the manufacturer, the product *R*-value at the specified installed thickness and the flame spread and smoke-developed indices. The installed thickness of the external duct insulation shall include the enclosed air space(s). The product *R*-value for external reflective duct insulation shall be determined in accordance with ASTM C1668.

4. External duct insulation and factory-insulated flexible ducts shall be legibly printed or identified at intervals not longer than 36 inches (914 mm) with the name of the manufacturer, the thermal resistance *R*-value at the specified installed thickness and the flame spread and smoke-developed indexes of the composite materials. Spray polyurethane foam manufacturers shall provide the same product information and properties, at the nominal installed thickness, to the customer in writing at the time of foam application. Nonreflective duct insulation product *R*-values shall be based on insulation only, excluding air films, vapor retarders or other duct components, and shall be based on tested C-values at 75°F (24°C) mean temperature at the installed thickness, in accordance with recognized industry procedures. The installed thickness of duct insulation used to determine its *R*-value shall be determined as follows:

   4.1. For duct board, duct liner and factory-made rigid ducts not normally subjected to compression, the nominal insulation thickness shall be used.

   4.2. For ductwrap, the installed thickness shall be assumed to be 75 percent (25-percent compression) of nominal thickness.

   4.3. For factory-made flexible air ducts, The installed thickness shall be determined by dividing the difference between the actual outside diameter and nominal inside diameter by two.

   4.4. For spray polyurethane foam, the aged *R*-value per inch measured in accordance with recognized industry standards shall be provided to the customer in writing at the time of foam application. In addition, the total *R*-value for the nominal application thickness shall be provided.

M1601.4 Installation. Duct installation shall comply with Sections M1601.4.1 through M1601.4.10.

M1601.4.1 Joints, seams and connections. Longitudinal and transverse joints, seams and connections in metallic and nonmetallic ducts shall be constructed as specified in SMACNA HVAC *Duct Construction Standards—Metal and Flexible* and NAIMA *Fibrous Glass Duct Construction Standards*. Joints, longitudinal and transverse seams, and connections in ductwork shall be securely fastened and sealed with welds, gaskets, mastics (adhesives), mastic-plus-embedded-fabric systems, liquid sealants or tapes. Tapes and mastics used to seal fibrous glass ductwork shall be *listed* and *labeled* in accordance with UL 181A and shall be marked "181A-P" for pressure-sensitive tape, "181 A-M" for mastic or "181 A-H" for heat-sensitive tape.

Tapes and mastics used to seal metallic and flexible air ducts and flexible air connectors shall comply with UL 181B and shall be marked "181 B-FX" for pressure-sensitive tape or "181 BM" for mastic. Duct connections to flanges of air distribution system equipment shall be sealed and mechanically fastened. Mechanical fasteners for use with flexible nonmetallic air ducts shall comply with UL 181B and shall be marked 181B-C. Crimp joints for round metallic ducts shall have a contact lap of not less than 1 inch (25 mm) and shall be mechanically fastened by means of not less than three sheet-metal screws or rivets equally spaced around the joint.

Closure systems used to seal all ductwork shall be installed in accordance with the manufacturers' instructions.

Exceptions:

1. Spray polyurethane foam shall be permitted to be applied without additional joint seals.
2. Where a duct connection is made that is partially inaccessible, three screws or rivets shall be equally spaced on the exposed portion of the joint so as to prevent a hinge effect.
3. For ducts having a static pressure classification of less than 2 inches of water column (500 Pa), additional closure systems shall not be required for continuously welded joints and seams and locking-type joints and seams of other than the snap-lock and button-lock types.

M1601.4.2 Duct lap. Crimp joints for round and oval metal ducts shall be lapped not less than 1 inch (25 mm) and the male end of the duct shall extend into the adjoining duct in the direction of airflow.

M1601.4.3 Plastic duct joints. Joints between plastic ducts and plastic fittings shall be made in accordance with the manufacturer's installation instructions.

M1601.4.4 Support. Factory-made ducts listed in accordance with UL 181 shall be supported in accordance with the manufacturer's installation instructions. Field- and shop-fabricated fibrous glass ducts shall be supported in accordance with the SMACNA *Fibrous Glass Duct Construction Standards* or the NAIMA *Fibrous Glass Duct Construction Standards*. Field- and shop-fabricated metal and flexible ducts shall be supported in accordance with the SMACNA HVAC *Duct Construction Standards—Metal and Flexible*.

M1601.4.5 Fireblocking. Duct installations shall be fireblocked in accordance with Section R602.8.

M1601.4.6 Duct insulation. Duct insulation shall be installed in accordance with the following requirements:

1. A vapor retarder having a maximum permeance of 0.05 perm [2.87 ng/(s · m^2 · Pa)] in accordance with ASTM E 96, or aluminum foil with a minimum thickness of 2 mils (0.05 mm), shall be installed on the exterior of insulation on cooling supply ducts that pass through unconditioned spaces conducive to condensation except where the insulation is spray polyurethane foam with a maximum water vapor permeance of 3 perm per inch [1722 ng/(s · m^2 · Pa)] at the installed thickness.
2. Exterior *duct systems* shall be protected against the elements.
3. Duct coverings shall not penetrate a fireblocked wall or floor.

M1601.4.7 Factory-made air ducts. Factory-made air ducts shall not be installed in or on the ground, in tile or metal pipe, or within masonry or concrete.

M1601.4.8 Duct separation. Ducts shall be installed with not less than 4 inches (102 mm) separation from earth except where they meet the requirements of Section M1601.1.2.

M1601.4.9 Ducts located in garages. Ducts in garages shall comply with the requirements of Section R302.5.2.

M1601.4.10 Flood hazard areas. In flood hazard areas as established by Table R301.2(1), *duct systems* shall be located or installed in accordance with Section R322.1.6.

M1601.5 Under-floor plenums. Under-floor plenums shall be prohibited in new structures. Modification or repairs to under-floor plenums in existing structures shall conform to the requirements of this section.

M1601.5.1 General. The space shall be cleaned of loose combustible materials and scrap, and shall be tightly enclosed. The ground surface of the space shall be covered with a moisture barrier having a minimum thickness of 4 mils (0.1 mm). Plumbing waste cleanouts shall not be located within the space.

Exception: Plumbing waste cleanouts shall be permitted to be located in unvented crawl spaces that receive *conditioned air* in accordance with Section R408.3.

M1601.5.2 Materials. The under-floor space, including the sidewall insulation, shall be formed by materials having flame spread index values not greater than 200 when tested in accordance with ASTM E 84 or UL 723.

M1601.5.3 Furnace connections. A duct shall extend from the furnace supply outlet to not less than 6 inches (152 mm) below the combustible framing. This duct shall comply with the provisions of Section M1601.1. A noncombustible receptacle shall be installed below any floor opening into the plenum in accordance with the following requirements:

1. The receptacle shall be securely suspended from the floor members and shall be not more than 18 inches (457 mm) below the floor opening.
2. The area of the receptacle shall extend 3 inches (76 mm) beyond the opening on all sides.
3. The perimeter of the receptacle shall have a vertical lip not less than 1 inch (25 mm) in height at the open sides.

M1601.5.4 Access. Access to an under-floor plenum shall be provided through an opening in the floor with minimum dimensions of 18 inches by 24 inches (457 mm by 610 mm).

M1601.5.5 Furnace controls. The furnace shall be equipped with an automatic control that will start the air-circulating fan when the air in the furnace bonnet reaches a temperature not higher than 150°F (66°C). The furnace shall additionally be equipped with an *approved* automatic control that limits the outlet air temperature to 200°F (93°C).

M1601.6 Independent garage HVAC systems. Furnaces and air-handling systems that supply air to living spaces shall not supply air to or return air from a garage.

SECTION M1602
RETURN AIR

M1602.1 Outdoor air openings. Outdoor intake openings shall be located in accordance with Section R303.5.1. Opening protection shall be in accordance with Section R303.6

M1602.2 Return air openings. Return air openings for heating, ventilation and air conditioning systems shall comply with all of the following:

1. Openings shall not be located less than 10 feet (3048 mm) measured in any direction from an open combustion chamber or draft hood of another appliance located in the same room or space.
2. The amount of return air taken from any room or space shall be not greater than the flow rate of supply air delivered to such room or space.
3. Return and transfer openings shall be sized in accordance with the appliance or equipment manufacturers' installation instructions, Manual D or the design of the registered design professional.
4. Return air shall not be taken from a closet, bathroom, toilet room, kitchen, garage, mechanical room, boiler room, furnace room or unconditioned attic.

   Exceptions:

   1. Taking return air from a kitchen is not prohibited where such return air openings serve the kitchen only, and are located not less than 10 feet (3048 mm) from the cooking appliances.
   2. Dedicated forced-air systems serving only the garage shall not be prohibited from obtaining return air from the garage.
   3. Taking return air from an unconditioned crawl space shall not be accomplished through a direct connection to the return side of a forced-air furnace. Transfer openings in the crawl space enclosure shall not be prohibited.
   4. Return air from one dwelling unit shall not be discharged into another dwelling unit.

CHAPTER 17

COMBUSTION AIR

SECTION M1701
GENERAL

M1701.1 Scope. Solid fuel-burning *appliances* shall be provided with *combustion air* in accordance with the *appliance* manufacturer's installation instructions. Oil-fired *appliances* shall be provided with *combustion air* in accordance with NFPA 31. The methods of providing *combustion air* in this chapter do not apply to fireplaces, fireplace stoves and direct-vent *appliances*. The requirements for combustion and dilution air for gas-fired *appliances* shall be in accordance with Chapter 24.

M1701.2 Opening location. In flood hazard areas as established in Table R301.2(1), *combustion air* openings shall be located at or above the elevation required in Section R322.2.1 or R322.3.2.

CHAPTER 18

CHIMNEYS AND VENTS

SECTION M1801
GENERAL

M1801.1 Venting required. Fuel-burning *appliances* shall be vented to the outdoors in accordance with their *listing* and *label* and manufacturer's installation instructions except *appliances* listed and *labeled* for unvented use. Venting systems shall consist of *approved* chimneys or vents, or venting assemblies that are integral parts of *labeled appliances*. Gas-fired *appliances* shall be vented in accordance with Chapter 24.

M1801.2 Draft requirements. A venting system shall satisfy the draft requirements of the *appliance* in accordance with the manufacturer's installation instructions, and shall be constructed and installed to develop a positive flow to convey combustion products to the outside atmosphere.

M1801.3 Existing chimneys and vents. Where an *appliance* is permanently disconnected from an existing chimney or vent, or where an *appliance* is connected to an existing chimney or vent during the process of a new installation, the chimney or vent shall comply with Sections M1801.3.1 through M1801.3.4.

M1801.3.1 Size. The chimney or vent shall be resized as necessary to control flue gas condensation in the interior of the chimney or vent and to provide the *appliance*, or *appliances* served, with the required draft. For the venting of oil-fired *appliances* to masonry chimneys, the resizing shall be done in accordance with NFPA 31.

M1801.3.2 Flue passageways. The flue gas passageway shall be free of obstructions and combustible deposits and shall be cleaned if previously used for venting a solid or liquid fuel-burning *appliance* or fireplace. The flue liner, chimney inner wall or vent inner wall shall be continuous and free of cracks, gaps, perforations, or other damage or deterioration that would allow the escape of combustion products, including gases, moisture and creosote.

M1801.3.3 Cleanout. Masonry chimneys shall be provided with a cleanout opening complying with Section R1003.17.

M1801.3.4 Clearances. Chimneys and vents shall have airspace clearance to combustibles in accordance with this code and the chimney or vent manufacturer's installation instructions.

Exception: Masonry chimneys equipped with a chimney lining system tested and *listed* for installation in chimneys in contact with combustibles in accordance with UL 1777, and installed in accordance with the manufacturer's instructions, shall not be required to have a clearance between combustible materials and exterior surfaces of the masonry chimney. Noncombustible firestopping shall be provided in accordance with this code.

M1801.4 Space around lining. The space surrounding a flue lining system or other vent installed within a masonry chimney shall not be used to vent any other *appliance*. This shall not prevent the installation of a separate flue lining in accordance with the manufacturer's installation instructions and this code.

M1801.5 Mechanical draft systems. A mechanical draft system shall be used only with *appliances listed* and *labeled* for such use. Provisions shall be made to prevent the flow of fuel to the *equipment* when the draft system is not operating. Forced draft systems and portions of induced draft systems under positive pressure during operation shall be designed and installed to prevent leakage of flue gases into a building.

M1801.6 Direct-vent appliances. Direct-vent *appliances* shall be installed in accordance with the manufacturer's instructions.

M1801.7 Support. Venting systems shall be adequately supported for the weight of the material used.

M1801.8 Duct penetrations. Chimneys, vents and vent connectors shall not extend into or through supply and return air ducts or plenums.

M1801.9 Fireblocking. Vent and chimney installations shall be fireblocked in accordance with Section R602.8.

M1801.10 Unused openings. Unused openings in any venting system shall be closed or capped.

M1801.11 Multiple-appliance venting systems. Two or more *listed* and *labeled appliances* connected to a common natural draft venting system shall comply with the following requirements:

1. *Appliances* that are connected to common venting systems shall be located on the same floor of the *dwelling*.

   Exception: Engineered systems as provided for in Section G2427.

2. Inlets to common venting systems shall be offset such that no portion of an inlet is opposite another inlet.
3. Connectors serving *appliances* operating under a natural draft shall not be connected to any portion of a mechanical draft system operating under positive pressure.

M1801.12 Multiple solid fuel prohibited. A solid fuel-burning *appliance* or fireplace shall not connect to a chimney passageway venting another *appliance*.

SECTION M1802
VENT COMPONENTS

M1802.1 Draft hoods. Draft hoods shall be located in the same room or space as the *combustion air* openings for the *appliances*.

M1802.2 Vent dampers. Vent dampers shall comply with Sections M1802.2.1 and M1802.2.2.

M1802.2.1 Manually operated. Manually operated dampers shall not be installed except in connectors or chimneys serving solid fuel-burning *appliances*.

M1802.2.2 Automatically operated. Automatically operated dampers shall conform to UL 17 and be installed in accordance with the terms of their *listing* and *label*. The installation shall prevent firing of the burner when the damper is not opened to a safe position.

M1802.3 Draft regulators. Draft regulators shall be provided for oil-fired *appliances* that must be connected to a chimney. Draft regulators provided for solid fuel-burning *appliances* to reduce draft intensity shall be installed and set in accordance with the manufacturer's installation instructions.

M1802.3.1 Location. Where required, draft regulators shall be installed in the same room or enclosure as the *appliance* so that a difference in pressure will not exist between the air at the regulator and the *combustion air* supply.

SECTION M1803
CHIMNEY AND VENT CONNECTORS

M1803.1 General. Connectors shall be used to connect fuel-burning *appliances* to a vertical chimney or vent except where the chimney or vent is attached directly to the *appliance*.

M1803.2 Connectors for oil and solid fuel appliances. Connectors for oil and solid fuel-burning *appliances* shall be constructed of factory-built chimney material, Type L vent material or single-wall metal pipe having resistance to corrosion and heat and thickness not less than that of galvanized steel as specified in Table M1803.2.

TABLE M1803.2
THICKNESS FOR SINGLE-WALL METAL PIPE CONNECTORS

DIAMETER OF CONNECTOR (inches)	GALVANIZED SHEET METAL GAGE NUMBER	MINIMUM THICKNESS (inch)
Less than 6	26	0.019
6 to 10	24	0.024
Over 10 through 16	22	0.029

For SI: 1 inch = 25.4 mm.

M1803.3 Installation. Vent and chimney connectors shall be installed in accordance with the manufacturer's instructions and within the space where the *appliance* is located. *Appliances* shall be located as close as practical to the vent or chimney. Connectors shall be as short and straight as possible and installed with a slope of not less than $^1/_4$ inch (6 mm) rise per foot of run. Connectors shall be securely supported and joints shall be fastened with sheet metal screws or rivets. Devices that obstruct the flow of flue gases shall not be installed in a connector unless *listed* and *labeled* or *approved* for such installations.

M1803.3.1 Floor, ceiling and wall penetrations. A chimney connector or vent connector shall not pass through any floor or ceiling. A chimney connector or vent connector shall not pass through a wall or partition unless the connector is *listed* and *labeled* for wall pass-through, or is routed through a device *listed* and *labeled* for wall pass-through and is installed in accordance with the conditions of its *listing* and *label*. Connectors for oil-fired *appliances listed* and *labeled* for Type L vents, passing through walls or partitions shall be in accordance with the following:

1. Type L vent material for oil *appliances* shall be installed with not less than *listed* and *labeled* clearances to combustible material.
2. Single-wall metal pipe shall be *guarded* by a ventilated metal thimble not less than 4 inches (102 mm) larger in diameter than the vent connector. A minimum 6 inches (152 mm) of clearance shall be maintained between the thimble and combustibles.

M1803.3.2 Length. The horizontal run of an uninsulated connector to a natural draft chimney shall not exceed 75 percent of the height of the vertical portion of the chimney above the connector. The horizontal run of a *listed* connector to a natural draft chimney shall not exceed 100 percent of the height of the vertical portion of the chimney above the connector.

M1803.3.3 Size. A connector shall not be smaller than the flue collar of the *appliance*.

Exception: Where installed in accordance with the *appliance* manufacturer's instructions.

M1803.3.4 Clearance. Connectors shall be installed with clearance to combustibles as set forth in Table M1803.3.4. Reduced clearances to combustible materials shall be in accordance with Table M1306.2 and Figure M1306.1.

TABLE M1803.3.4
CHIMNEY AND VENT CONNECTOR CLEARANCES TO COMBUSTIBLE MATERIALS[a]

TYPE OF CONNECTOR	MINIMUM CLEARANCE (inches)
Single-wall metal pipe connectors:	
Oil and solid-fuel appliances	18
Oil appliances listed for use with Type L vents	9
Type L vent piping connectors:	
Oil and solid-fuel appliances	9
Oil appliances listed for use with Type L vents	3[b]

For SI: 1 inch = 25.4 mm.

a. These minimum clearances apply to unlisted single-wall chimney and vent connectors. Reduction of required clearances is permitted as in Table M1306.2.

b. Where listed Type L vent piping is used, the clearance shall be in accordance with the vent listing.

M1803.3.5 Access. The entire length of a connector shall be accessible for inspection, cleaning and replacement.

M1803.4 Connection to fireplace flue. Connection of *appliances* to chimney flues serving fireplaces shall comply with Sections M1803.4.1 through M1803.4.4.

M1803.4.1 Closure and accessibility. A noncombustible seal shall be provided below the point of connection to prevent entry of room air into the flue. Means shall be provided for access to the flue for inspection and cleaning.

M1803.4.2 Connection to factory-built fireplace flue. A different *appliance* shall not be connected to a flue serving a factory-built fireplace unless the *appliance* is specifically *listed* for such an installation. The connection shall be made in conformance with the *appliance* manufacturer's instructions.

M1803.4.3 Connection to masonry fireplace flue. A connector shall extend from the *appliance* to the flue serving a masonry fireplace to convey the flue gases directly into the flue. The connector shall be accessible or removable for inspection and cleaning of both the connector and the flue. *Listed* direct-connection devices shall be installed in accordance with their *listing*.

M1803.4.4 Size of flue. The size of the fireplace flue shall be in accordance with Section M1805.3.1.

SECTION M1804
VENTS

M1804.1 Type of vent required. *Appliances* shall be provided with a *listed* and *labeled* venting system as set forth in Table M1804.1.

TABLE M1804.1
VENT SELECTION CHART

VENT TYPES	APPLIANCE TYPES
Type L oil vents	Oil-burning appliances listed and labeled for venting with Type L vents
Pellet vents	Pellet fuel-burning appliances listed and labeled for use with pellet vents

M1804.2 Termination. Vent termination shall comply with Sections M1804.2.1 through M1804.2.6.

M1804.2.1 Through the roof. Vents passing through a roof shall extend through flashing and terminate in accordance with the manufacturer's installation requirements.

M1804.2.2 Decorative shrouds. Decorative shrouds shall not be installed at the termination of vents except where the shrouds are *listed* and *labeled* for use with the specific venting system and are installed in accordance with the manufacturer's instructions.

M1804.2.3 Natural draft appliances. Vents for natural draft *appliances* shall terminate not less than 5 feet (1524 mm) above the highest connected *appliance* outlet, and natural draft gas vents serving wall furnaces shall terminate at an elevation not less than 12 feet (3658 mm) above the bottom of the furnace.

M1804.2.4 Type L vent. Type L venting systems shall conform to UL 641 and shall terminate with a *listed* and *labeled* cap in accordance with the vent manufacturer's installation instructions not less than 2 feet (610 mm) above the roof and not less than 2 feet (610 mm) above any portion of the building within 10 feet (3048 mm).

M1804.2.5 Direct vent terminations. Vent terminals for direct-vent *appliances* shall be installed in accordance with the manufacturer's instructions.

M1804.2.6 Mechanical draft systems. Mechanical draft systems shall comply with UL 378 and shall be installed in accordance with their *listing*, the manufacturer's instructions and, except for direct-vent *appliances*, the following requirements:

1. The vent terminal shall be located not less than 3 feet (914 mm) above a forced air inlet located within 10 feet (3048 mm).
2. The vent terminal shall be located not less than 4 feet (1219 mm) below, 4 feet (1219 mm) horizontally from, or 1 foot (305 mm) above any door, window or gravity air inlet into a *dwelling*.
3. The vent termination point shall be located not closer than 3 feet (914 mm) to an interior corner formed by two walls perpendicular to each other.
4. The bottom of the vent terminal shall be located not less than 12 inches (305 mm) above finished ground level.
5. The vent termination shall not be mounted directly above or within 3 feet (914 mm) horizontally of an oil tank vent or gas meter.
6. Power exhauster terminations shall be located not less than 10 feet (3048 mm) from *lot lines* and adjacent buildings.
7. The discharge shall be directed away from the building.

M1804.3 Installation. Type L and pellet vents shall be installed in accordance with the terms of their *listing* and *label* and the manufacturer's instructions.

M1804.3.1 Size of single-appliance venting systems. An individual vent for a single *appliance* shall have a cross-sectional area equal to or greater than the area of the connector to the *appliance*, but not less than 7 square inches (4515 mm^2) except where the vent is an integral part of a *listed* and *labeled appliance*.

M1804.4 Door swing. Appliance and equipment vent terminals shall be located such that doors cannot swing within 12 inches (305 mm) horizontally of the vent terminals. Door stops or closers shall not be installed to obtain this clearance.

SECTION M1805
MASONRY AND FACTORY-BUILT CHIMNEYS

M1805.1 General. Masonry and factory-built chimneys shall be built and installed in accordance with Sections R1003 and R1005, respectively. Flue lining for masonry chimneys shall comply with Section R1003.11.

M1805.2 Masonry chimney connection. A chimney connector shall enter a masonry chimney not less than 6 inches (152 mm) above the bottom of the chimney. Where it is not possible to locate the connector entry at least 6 inches (152 mm) above the bottom of the chimney flue, a cleanout shall be provided by installing a capped tee in the connector next to the chimney. A connector entering a masonry chimney shall extend through, but not beyond, the wall and shall be flush with the inner face of the liner. Connectors, or thimbles where used, shall be firmly cemented into the masonry.

M1805.3 Size of chimney flues. The effective area of a natural draft chimney flue for one *appliance* shall be not less than the area of the connector to the *appliance*. The area of chimney flues connected to more than one *appliance* shall be not less than the area of the largest connector plus 50 percent of the areas of additional chimney connectors.

Exception: Chimney flues serving oil-fired *appliances* sized in accordance with NFPA 31.

M1805.3.1 Size of chimney flue for solid-fuel appliance. Except where otherwise specified in the manufacturer's installation instructions, the cross-sectional area of a flue connected to a solid-fuel-burning *appliance* shall be not less than the area of the flue collar or connector, and not larger than three times the area of the flue collar.

CHAPTER 19

SPECIAL APPLIANCES, EQUIPMENT AND SYSTEMS

SECTION M1901
RANGES AND OVENS

M1901.1 Clearances. Freestanding or built-in ranges shall have a vertical clearance above the cooking top of not less than 30 inches (762 mm) to unprotected combustible material. Reduced clearances are permitted in accordance with the *listing* and *labeling* of the range hoods or *appliances*. The installation of a listed and labeled cooking appliance or microwave oven over a listed and labeled cooking appliance shall be in accordance with Section M1504.1. The clearances for a domestic open-top broiler unit shall be in accordance with Section M1505.1.

M1901.2 Cooking appliances. Cooking *appliances* shall be *listed* and *labeled* for household use and shall be installed in accordance with the manufacturer's instructions. The installation shall not interfere with *combustion air* or access for operation and servicing. Electric cooking appliances shall comply with UL 1026 or UL 858. Solid-fuel-fired fireplace stoves shall comply with UL 737.

SECTION M1902
SAUNA HEATERS

M1902.1 Locations and protection. Sauna heaters shall be protected from accidental contact by persons with a guard of material having a low thermal conductivity, such as wood. The guard shall not have a substantial effect on the transfer of heat from the heater to the room.

M1902.2 Installation. Sauna heaters shall be installed in accordance with the manufacturer's instructions. Sauna heaters shall comply with UL 875.

M1902.3 Combustion air. *Combustion air* and venting for a nondirect vent-type heater shall be provided in accordance with Chapters 17 and 18, respectively.

M1902.4 Controls. Sauna heaters shall be equipped with a thermostat that will limit room temperature to not greater than 194°F (90°C). Where the thermostat is not an integral part of the heater, the heat-sensing element shall be located within 6 inches (152 mm) of the ceiling.

SECTION M1903
STATIONARY FUEL CELL POWER PLANTS

M1903.1 General. Stationary fuel cell power plants having a power output not exceeding 1,000 kW, shall comply with ANSI/CSA America FC 1 and shall be installed in accordance with the manufacturer's instructions and NFPA 853.

SECTION M1904
GASEOUS HYDROGEN SYSTEMS

M1904.1 Installation. Gaseous hydrogen systems shall be installed in accordance with the applicable requirements of Sections M1307.4 and M1903.1 and the *International Fuel Gas Code*, the *International Fire Code* and the *International Building Code*.

CHAPTER 20

BOILERS AND WATER HEATERS

SECTION M2001
BOILERS

M2001.1 Installation. In addition to the requirements of this code, the installation of boilers shall conform to the manufacturer's instructions. The manufacturer's rating data, the nameplate and operating instructions of a permanent type shall be attached to the boiler. Boilers shall have their controls set, adjusted and tested by the installer. A complete control diagram together with complete boiler operating instructions shall be furnished by the installer. Solid and liquid fuel-burning boilers shall be provided with *combustion air* as required by Chapter 17.

M2001.1.1 Standards. Packaged oil-fired boilers shall be listed and labeled in accordance with UL 726. Packaged electric boilers shall be listed and labeled in accordance with UL 834. Solid fuel-fired boilers shall be listed and labeled in accordance with UL 2523. Boilers shall be designed, constructed and certified in accordance with the ASME *Boiler and Pressure Vessel Code*, Section I or IV. Controls and safety devices for boilers with fuel input ratings of 12,500,000 Btu/hr (3 663 388 watts) or less shall meet the requirements of ASME CSD-1. Gas-fired boilers shall conform to the requirements listed in Chapter 24.

M2001.2 Clearance. Boilers shall be installed in accordance with their *listing* and *label.*

M2001.3 Valves. Every boiler or modular boiler shall have a shutoff valve in the supply and return piping. For multiple boiler or multiple modular boiler installations, each boiler or modular boiler shall have individual shutoff valves in the supply and return piping.

Exception: Shutoff valves are not required in a system having a single low-pressure steam boiler.

M2001.4 Flood-resistant installation. In flood hazard areas established in Table R301.2(1), boilers, water heaters and their control systems shall be located or installed in accordance with Section R322.1.6.

SECTION M2002
OPERATING AND SAFETY CONTROLS

M2002.1 Safety controls. Electrical and mechanical operating and safety controls for boilers shall be *listed* and *labeled.*

M2002.2 Hot water boiler gauges. Every hot water boiler shall have a pressure gauge and a temperature gauge, or combination pressure and temperature gauge. The gauges shall indicate the temperature and pressure within the normal range of the system's operation.

M2002.3 Steam boiler gauges. Every steam boiler shall have a water-gauge glass and a pressure gauge. The pressure gauge shall indicate the pressure within the normal range of the system's operation. The gauge glass shall be installed so that the midpoint is at the normal water level.

M2002.4 Pressure-relief valve. Boilers shall be equipped with pressure-relief valves with minimum rated capacities for the *equipment* served. Pressure-relief valves shall be set at the maximum rating of the boiler. Discharge shall be piped to drains by gravity to within 18 inches (457 mm) of the floor or to an open receptor.

M2002.5 Boiler low-water cutoff. Steam and hot water boilers shall be protected with a low-water cutoff control.

Exception: A low-water cutoff is not required for coil-type and water-tube type boilers that require forced circulation of water through the boiler and that are protected with a flow sensing control.

M2002.6 Operation. Low-water cutoff controls and flow sensing controls required by Section M2002.5 shall automatically stop the combustion operation of the appliance when the water level drops below the lowest safe water level as established by the manufacturer or when the water circulation flow is less than that required for safe operation of the appliance, respectively.

SECTION M2003
EXPANSION TANKS

M2003.1 General. Hot water boilers shall be provided with expansion tanks. Nonpressurized expansion tanks shall be securely fastened to the structure or boiler and supported to carry twice the weight of the tank filled with water. Provisions shall be made for draining nonpressurized tanks without emptying the system.

M2003.1.1 Pressurized expansion tanks. Pressurized expansion tanks shall be consistent with the volume and capacity of the system. Tanks shall be capable of withstanding a hydrostatic test pressure of two and one-half times the allowable working pressure of the system.

M2003.2 Minimum capacity. The minimum capacity of expansion tanks shall be determined from Table M2003.2.

TABLE M2003.2
EXPANSION TANK MINIMUM CAPACITY[a]
FOR FORCED HOT-WATER SYSTEMS

SYSTEM VOLUME[b] (gallons)	PRESSURIZED DIAPHRAGM TYPE	NONPRESSURIZED TYPE
10	1.0	1.5
20	1.5	3.0
30	2.5	4.5
40	3.0	6.0
50	4.0	7.5
60	5.0	9.0
70	6.0	10.5
80	6.5	12.0
90	7.5	13.5
100	8.0	15.0

For SI: 1 gallon = 3.785 L, 1 pound per square inch gauge = 6.895 kPa, °C = [(°F)-32]/1.8.

a. Based on average water temperature of 195°F (91°C), fill pressure of 12 psig and a maximum operating pressure of 30 psig.

b. System volume includes volume of water in boiler, convectors and piping, not including the expansion tank.

SECTION M2004
WATER HEATERS USED FOR SPACE HEATING

M2004.1 General. Water heaters used to supply both potable hot water and hot water for space heating shall be installed in accordance with this chapter, Chapter 24, Chapter 28 and the manufacturer's instructions.

SECTION M2005
WATER HEATERS

M2005.1 General. Water heaters shall be installed in accordance with Chapter 28, the manufacturer's instructions and the requirements of this code. Water heaters installed in an attic shall comply with the requirements of Section M1305.1.3. Gas-fired water heaters shall comply with the requirements in Chapter 24. Domestic electric water heaters shall comply with UL 174. Oiled-fired water heaters shall comply with UL 732. Thermal solar water heaters shall comply with Chapter 23 and UL 174. Solid fuel-fired water heaters shall comply with UL 2523.

M2005.2 Prohibited locations. Fuel-fired water heaters shall not be installed in a room used as a storage closet. Water heaters located in a bedroom or bathroom shall be installed in a sealed enclosure so that *combustion air* will not be taken from the living space. Installation of direct-vent water heaters within an enclosure is not required.

M2005.2.1 Water heater access. Access to water heaters that are located in an *attic* or underfloor crawl space is permitted to be through a closet located in a sleeping room or bathroom where *ventilation* of those spaces is in accordance with this code.

M2005.3 Electric water heaters. Electric water heaters shall also be installed in accordance with the applicable provisions of Chapters 34 through 43.

M2005.4 Supplemental water-heating devices. Potable water heating devices that use refrigerant-to-water heat exchangers shall be *approved* and installed in accordance with the manufacturer's instructions.

SECTION M2006
POOL HEATERS

M2006.1 General. Pool and spa heaters shall be installed in accordance with the manufacturer's installation instructions. Oil-fired pool heaters shall comply with UL 726. Electric pool and spa heaters shall comply with UL 1261.

M2006.2 Clearances. The clearances shall not interfere with *combustion air*, draft hood or flue terminal relief, or accessibility for servicing.

M2006.3 Temperature-limiting devices. Pool heaters shall have temperature-relief valves.

M2006.4 Bypass valves. Where an integral bypass system is not provided as a part of the pool heater, a bypass line and valve shall be installed between the inlet and outlet piping for use in adjusting the flow of water through the heater.

CHAPTER 21

HYDRONIC PIPING

SECTION M2101
HYDRONIC PIPING SYSTEMS INSTALLATION

M2101.1 General. Hydronic piping shall conform to Table M2101.1. *Approved* piping, valves, fittings and connections shall be installed in accordance with the manufacturer's instructions. Pipe and fittings shall be rated for use at the operating temperature and pressure of the hydronic system. Used pipe, fittings, valves or other materials shall be free of foreign materials.

M2101.2 System drain down. Hydronic piping systems shall be installed to permit draining of the system. Where the system drains to the plumbing drainage system, the installation shall conform to the requirements of Chapters 25 through 32 of this code.

Exception: The buried portions of systems embedded underground or under floors.

M2101.3 Protection of potable water. The potable water system shall be protected from backflow in accordance with the provisions listed in Section P2902.

M2101.4 Pipe penetrations. Openings through concrete or masonry building elements shall be sleeved.

M2101.5 Contact with building material. A hydronic piping system shall not be in direct contact with any building material that causes the piping material to degrade or corrode.

M2101.6 Drilling and notching. Wood-framed structural members shall be drilled, notched or altered in accordance with the provisions of Sections R502.8, R602.6, R602.6.1 and R802.7. Holes in load bearing members of cold-formed steel light-frame construction shall be permitted only in accordance with Sections R505.2.6, R603.2.6 and R804.2.6. In accordance with the provisions of Sections R505.3.5, R603.3.4 and R804.3.3, cutting and notching of flanges and lips of load-bearing members of cold-formed steel light-frame construction shall not be permitted. Structural insulated panels (SIPs) shall be drilled and notched or altered in accordance with the provisions of Section R610.7.

M2101.7 Prohibited tee applications. Fluid in the supply side of a hydronic system shall not enter a tee fitting through the branch opening.

M2101.8 Expansion, contraction and settlement. Piping shall be installed so that piping, connections and *equipment* shall not be subjected to excessive strains or stresses. Provisions shall be made to compensate for expansion, contraction, shrinkage and structural settlement.

M2101.9 Piping support. Hangers and supports shall be of material of sufficient strength to support the piping, and shall be fabricated from materials compatible with the piping material. Piping shall be supported at intervals not exceeding the spacing specified in Table M2101.9.

TABLE M2101.9
HANGER SPACING INTERVALS

PIPING MATERIAL	MAXIMUM HORIZONTAL SPACING (feet)	MAXIMUM VERTICAL SPACING (feet)
ABS	4	10[a]
CPVC ≤ 1-inch pipe or tubing	3	5[a]
CPVC ≥ $1^1/_4$ inches	4	10[a]
Copper or copper alloy pipe	12	10
Copper or copper alloy tubing	6	10
PB pipe or tubing	2.67	4
PE pipe or tubing	2.67	4
PE-RT ≤ 1 inch	2.67	10[a]
PE-RT ≥ $1^1/_4$ inches	4	10[a]
PEX tubing	2.67	4
PP < 1-inch pipe or tubing	2.67	4
PP > $1^1/_4$ inches	4	10[a]
PVC	4	10[a]
Steel pipe	12	15
Steel tubing	8	10

For SI: 1 inch = 25.4 mm, 1 foot = 304.8 mm.

a. For sizes 2 inches and smaller, a guide shall be installed midway between required vertical supports. Such guides shall prevent pipe movement in a direction perpendicular to the axis of the pipe.

M2101.10 Tests. Hydronic piping systems shall be tested hydrostatically at a pressure of one and one-half times the maximum system design pressure, but not less than 100 pounds per square inch (689 kPa). The duration of each test shall be not less than 15 minutes and not more than 20 minutes.

SECTION M2102
BASEBOARD CONVECTORS

M2102.1 General. Baseboard convectors shall be installed in accordance with the manufacturer's instructions. Convectors shall be supported independently of the hydronic piping.

SECTION M2103
FLOOR HEATING SYSTEMS

M2103.1 Piping materials. Piping for embedment in concrete or gypsum materials shall be standard-weight steel pipe, copper and copper alloy pipe and tubing, cross-linked polyethylene/aluminum/cross-linked polyethylene (PEX-AL-PEX) pressure pipe, chlorinated polyvinyl chloride (CPVC), polybutylene, cross-linked polyethylene (PEX) tubing, polyethylene of raised temperature (PE-RT) or polypropylene (PP) with a minimum rating of 100 psi at 180°F (690 kPa at 82°C).

TABLE M2101.1
HYDRONIC PIPING MATERIALS

MATERIAL	USE CODE[a]	STANDARD[b]	JOINTS	NOTES
Acrylonitrile butadiene styrene (ABS) plastic pipe	1, 5	ASTM D 1527; ASTM F 2806; ASTM F 2969	Solvent cement joints	
Brass pipe	1	ASTM B 43	Brazed, welded, threaded, mechanical and flanged fittings	
Brass tubing	1	ASTM B 135	Brazed, soldered and mechanical fittings	
Chlorinated poly (vinyl chloride) (CPVC) pipe and tubing	1, 2, 3	ASTM D 2846	Solvent cement joints, compression joints and threaded adapters	
Copper pipe	1	ASTM B 42, B 302	Brazed, soldered and mechanical fittings threaded, welded and flanged	
Copper tubing (type K, L or M)	1, 2	ASTM B 75, B 88, B 251, B 306	Brazed, soldered and flared mechanical fittings	Joints embedded in concrete
Cross-linked polyethylene (PEX)	1, 2, 3	ASTM F 876, F 877	(See PEX fittings)	Install in accordance with manufacturer's instructions
Cross-linked polyethylene/ aluminum/cross-linked polyethylene-(PEX-AL-PEX) pressure pipe	1, 2	ASTM F 1281 or CAN/ CSA B137.10	Mechanical, crimp/insert	Install in accordance with manufacturer's instructions
PEX fittings		ASTM F 877 ASTM F 1807 ASTM F 1960 ASTM F 2098 ASTM F 2159 ASTM F 2735	Copper-crimp/insert fittings, cold expansion fittings, stainless steel clamp, insert fittings	Install in accordance with manufacturer's instructions
Polybutylene (PB) pipe and tubing	1, 2, 3	ASTM D 3309	Heat-fusion, crimp/insert and compression	Joints in concrete shall be heat-fused
Polyethylene/aluminum/polyethylene (PE-AL-PE) pressure pipe	1, 2, 3	ASTM F 1282 CSA B 137.9	Mechanical, crimp/insert	
Polypropylene (PP)	1, 2, 3	ISO 15874 ASTM F 2389	Heat-fusion joints, mechanical fittings, threaded adapters, compression joints	
Raised temperature polyethylene (PE-RT)	1, 2, 3	ASTM F 2623 ASTM F 2769	Copper crimp/insert fitting stainless steel clamp, insert fittings	
Raised Temperature Polyethylene (PE-RT) fittings	1, 2,3	ASTM F 1807 ASTM F 2159 ASTM F 2735 ASTM F 2769 ASTM F 2098	Copper crimp/insert fitting stainless steel clamp, insert fittings	
Steel pipe	1, 2	ASTM A 53, A 106	Brazed, welded, threaded, flanged and mechanical fittings	Joints in concrete shall be welded. Galvanized pipe shall not be welded or brazed.
Steel tubing	1	ASTM A 254	Mechanical fittings, welded	

For SI: °C = [(°F)-32]/1.8.

a. Use code:
1. Above ground.
2. Embedded in radiant systems.
3. Temperatures below 180°F only.
4. Low temperature (below 130°F) applications only.
5. Temperatures below 160°F only.

b. Standards as listed in Chapter 44.

M2103.2 Thermal barrier required. Radiant floor heating systems shall have a thermal barrier in accordance with Sections M2103.2.1 through M2103.2.4.

Exception: Insulation shall not be required in engineered systems where it can be demonstrated that the insulation will decrease the efficiency or have a negative effect on the installation.

M2103.2.1 Slab-on-grade installation. Radiant piping used in slab-on-grade applications shall have insulating materials having a minimum *R*-value of 5 installed beneath the piping.

M2103.2.2 Suspended floor installation. In suspended floor applications, insulation shall be installed in the joist bay cavity serving the heating space above and shall consist of materials having a minimum *R*-value of 11.

M2103.2.3 Thermal break required. A thermal break consisting of asphalt expansion joint materials or similar insulating materials shall be provided at a point where a heated slab meets a foundation wall or other conductive slab.

M2103.2.4 Thermal barrier material marking. Insulating materials used in thermal barriers shall be installed so that the manufacturer's *R*-value mark *is readily observable upon inspection.*

M2103.3 Piping joints. Copper and copper alloy systems shall be soldered in accordance with ASTM B 828. Fluxes for soldering shall be in accordance with ASTM B 813. Brazing fluxes shall be in accordance with AWS A5.31. Piping joints that are embedded shall be installed in accordance with the following requirements:

1. Steel pipe joints shall be welded.
2. Copper tubing shall be joined by brazing complying with Section P3003.6.1.
3. Polybutylene pipe and tubing joints shall be installed with socket-type heat-fused polybutylene fittings.
4. CPVC tubing shall be joined using solvent cement joints.
5. Polypropylene pipe and tubing joints shall be installed with socket-type heat-fused polypropylene fittings.
6. Cross-linked polyethylene (PEX) tubing shall be joined using cold expansion, insert or compression fittings.
7. Raised temperature polyethylene (PE-RT) tubing shall be joined using insert or compression fittings.

M2103.4 Testing. Piping or tubing to be embedded shall be tested by applying a hydrostatic pressure of not less than 100 psi (690 kPa). The pressure shall be maintained for 30 minutes, during which, the joints shall be visually inspected for leaks.

SECTION M2104
LOW TEMPERATURE PIPING

M2104.1 Piping materials. Low temperature piping for embedment in concrete or gypsum materials shall be as indicated in Table M2101.1.

M2104.2 Piping joints. Piping joints, other than those in Section M2103.3, that are embedded shall comply with the following requirements:

1. Cross-linked polyethylene (PEX) tubing shall be installed in accordance with the manufacturer's instructions.
2. Polyethylene tubing shall be installed with heat fusion joints.
3. Polypropylene (PP) tubing shall be installed in accordance with the manufacturer's instructions.
4. Raised temperature polyethylene (PE-RT) shall be installed in accordance with the manufacturer's instructions.

M2104.3 Raised temperature polyethylene (PE-RT) plastic tubing. Joints between raised temperature polyethylene tubing and fittings shall conform to Sections M2104.3.1, M2104.3.2 and M2104.3.3. Mechanical joints shall be installed in accordance with the manufacturer's instructions.

M2104.3.1 Compression-type fittings. Where compression-type fittings include inserts and ferrules or O-rings, the fittings shall be installed without omitting such inserts and ferrules or O-rings.

M2104.3.2 PE-RT-to-metal connections. Solder joints in a metal pipe shall not occur within 18 inches (457 mm) of a transition from such metal pipe to PE-RT pipe.

M2104.3.3 PE-RT insert fittings. PE-RT insert fittings shall be installed in accordance with the manufacturer's instructions.

M2104.4 Polyethylene/Aluminum/Polyethylene (PE-AL-PE) pressure pipe. Joints between polyethylene/aluminum/polyethylene pressure pipe and fittings shall conform to Sections M2104.4.1 and M2104.4.2. Mechanical joints shall be installed in accordance with the manufacturer's instructions.

M2104.4.1 Compression-type fittings. Where compression-type fittings include inserts and ferrules or O-rings, the fittings shall be installed without omitting such inserts and ferrules or O-rings.

M2104.4.2 PE-AL-PE to metal connections. Solder joints in a metal pipe shall not occur within 18 inches (457 mm) of a transition from such metal pipe to PE-AL-PE pipe.

SECTION M2105
GROUND-SOURCE HEAT-PUMP SYSTEM LOOP PIPING

M2105.1 Plastic ground-source heat-pump loop piping. Plastic piping and tubing material used in water-based ground-source heat-pump ground-loop systems shall conform to the standards specified in this section.

M2105.2 Used materials. Reused pipe, fittings, valves, and other materials shall not be used in ground-source heat-pump loop systems.

M2105.3 Material rating. Pipe and tubing shall be rated for the operating temperature and pressure of the ground-source

heat-pump loop system. Fittings shall be suitable for the pressure applications and recommended by the manufacturer for installation with the pipe and tubing material installed. Where used underground, materials shall be suitable for burial.

M2105.4 Piping and tubing materials standards. Ground-source heat-pump ground-loop pipe and tubing shall conform to the standards listed in Table M2105.4.

M2105.5 Fittings. Ground-source heat-pump pipe fittings shall be approved for installation with the piping materials to be installed, shall conform to the standards listed in Table M2105.5 and, where installed underground, shall be suitable for burial.

M2105.6 Joints and connections. Joints and connections shall be of an approved type. Joints and connections shall be tight for the pressure of the ground-source loop system. Joints used underground shall be approved for such applications.

M2105.6.1 Joints between different piping materials. Joints between different piping materials shall be made with approved transition fittings.

M2105.7 Preparation of pipe ends. Pipe shall be cut square, reamed, and shall be free of burrs and obstructions. CPVC, PE and PVC pipe shall be chamfered. Pipe ends shall have full-bore openings and shall not be undercut.

M2105.8 Joint preparation and installation. Where required by Sections M2105.9 through M2105.11, the preparation and installation of mechanical and thermoplastic-welded joints shall comply with Sections M2105.8.1 and M2015.8.2.

M2105.8.1 Mechanical joints. Mechanical joints shall be installed in accordance with the manufacturer's instructions.

M2105.8.2 Thermoplastic-welded joints. Joint surfaces for thermoplastic-welded joints shall be cleaned by an approved procedure. Joints shall be welded in accordance with the manufacturer's instructions.

M2105.9 CPVC plastic pipe. Joints between CPVC plastic pipe or fittings shall be solvent-cemented in accordance with Section P2906.9.1.2. Threaded joints between fittings and CPVC plastic pipe shall be in accordance with Section M2105.9.1.

TABLE M2105.4
GROUND-SOURCE LOOP PIPE

MATERIAL	STANDARD
Chlorinated polyvinyl chloride (CPVC)	ASTM D 2846; ASTM F 437; ASTM F 438; ASTM F 439; ASTM F 441; ASTM F 442; CSA B137.6
Cross-linked polyethylene (PEX)	ASTM F 876; ASTM F 877 CSA B137.5
Polyethylene/aluminum/polyethylene (PE-AL-PE) pressure pipe	ASTM F 1282; CSA B137.9; AWWA C 903
High-density Polyethylene (HDPE)	ASTM D 2737; ASTM D 3035; ASTM F 714; AWWA C901; CSA B137.1; CSA C448; NSF 358-1
Polypropylene (PP-R)	ASTM F 2389; CSA B137.11
Polyvinyl chloride (PVC)	ASTM D 1785; ASTM D 2241; CSA 137.3
Raised temperature polyethylene (PE-RT)	ASTM F 2623; ASTM F 2769

TABLE M2105.5
GROUND-SOURCE LOOP PIPE FITTINGS

PIPE MATERIAL	STANDARD
Chlorinated polyvinyl chloride (CPVC)	ASTM D 2846; ASTM F 437; ASTM F 438; ASTM F 439; ASTM F 1970; CSA B137.6
Cross-linked polyethylene (PEX)	ASTM F 877; ASTM F 1807; ASTM F 1960; ASTM F 2080; ASTM F 2159; ASTM F 2434; CSA B137.5
Polyethylene/aluminum/polyethylene (PE-AL-PE)	ASTM F 2434; ASTM F 1282; CSA B137.9
High-density Polyethylene (HDPE)	ASTM D 2683; ASTM D 3261; ASTM F 1055; CSA B137.1; CSA C448; NSF 358-1
Polypropylene (PP-R)	ASTM F 2389; CSA B137.11; NSF 358-2
Polyvinyl chloride (PVC)	ASTM D 2464; ASTM D 2466; ASTM D 2467; ASTM F 1970, CSA B137.2; CSA B137.3
Raised temperature polyethylene (PE-RT)	ASTM D 3261; ASTM F 1807; ASTM F 2159; F 2769; B137.1

M2105.9.1 Threaded joints. Threads shall conform to ASME B1.20.1. The pipe shall be Schedule 80 or heavier plastic pipe and shall be threaded with dies specifically designed for plastic pipe. Thread lubricant, pipe-joint compound or tape shall be applied on the male threads only and shall be approved for application on the piping material.

M2105.10 Cross-linked polyethylene (PEX) plastic tubing. Joints between cross-linked polyethylene plastic tubing and fittings shall comply with Sections M2105.10.1 and M2105.10.2. Mechanical joints shall comply with Section M2105.8.1.

M2105.10.1 Compression-type fittings. Where compression-type fittings include inserts and ferrules or O-rings, the fittings shall be installed without omitting the inserts and ferrules or O-rings.

M2105.10.2 Plastic-to-metal connections. Solder joints in a metal pipe shall not occur within 18 inches (457 mm) of a transition from such metal pipe to plastic pipe or tubing.

M2105.11 Polyethylene plastic pipe and tubing. Joints between polyethylene plastic pipe and tubing or fittings for ground-source heat-pump loop systems shall be heat-fusion joints complying with Section M2105.11.1, electrofusion joints complying with Section M2105.11.2, or stab-type insertion joints complying with Section M2105.11.3.

M2105.11.1 Heat-fusion joints. Joints shall be of the socket-fusion, saddle-fusion or butt-fusion type, and joined in accordance with ASTM D 2657. Joint surfaces shall be clean and free of moisture. Joint surfaces shall be heated to melt temperatures and joined. The joint shall be undisturbed until cool. Fittings shall be manufactured in accordance with ASTM D 2683 or ASTM D 3261.

M2105.11.2 Electrofusion joints. Joints shall be of the electrofusion type. Joint surfaces shall be clean and free of moisture, and scoured to expose virgin resin. Joint surfaces shall be heated to melt temperatures for the period of time specified by the manufacturer. The joint shall be undisturbed until cool. Fittings shall be manufactured in accordance with ASTM F 1055.

M2105.11.3 Stab-type insert fittings. Joint surfaces shall be clean and free of moisture. Pipe ends shall be chamfered and inserted into the fittings to full depth. Fittings shall be manufactured in accordance with ASTM F 1924.

M2105.12 Polypropylene (PP) plastic. Joints between PP plastic pipe and fittings shall comply with Sections M2105.12.1 and M2105.12.2.

M2105.12.1 Heat-fusion joints. Heat-fusion joints for polypropylene (PP) pipe and tubing joints shall be installed with socket-type heat-fused polypropylene fittings, electrofusion polypropylene fittings or by butt fusion. Joint surfaces shall be clean and free from moisture. The joint shall be undisturbed until cool. Joints shall be made in accordance with ASTM F 2389.

M2105.12.2 Mechanical and compression sleeve joints. Mechanical and compression sleeve joints shall be installed in accordance with the manufacturer's instructions.

M2105.13 Raised temperature polyethylene (PE-RT) plastic tubing. Joints between raised temperature polyethylene tubing and fittings shall comply with Sections M2105.13.1 and M2105.13.2. Mechanical joints shall comply with Section M2105.8.1.

M2105.13.1 Compression-type fittings. Where compression-type fittings include inserts and ferrules or O-rings, the fittings shall be installed without omitting the inserts and ferrules or O-rings.

M2105.13.2 PE-RT-to-metal connections. Solder joints in a metal pipe shall not occur within 18 inches (457 mm) of a transition from such metal pipe to PE-RT pipe or tubing.

M2105.14 PVC plastic pipe. Joints between PVC plastic pipe or fittings shall be solvent-cemented in accordance with Section P2906.9.1.4. Threaded joints between fittings and PVC plastic pipe shall be in accordance with Section M2105.9.1.

M2105.15 Shutoff valves. Shutoff valves shall be installed in ground-source loop piping systems in the locations indicated in Sections M2105.15.1 through M2105.15.6.

M2105.15.1 Heat exchangers. Shutoff valves shall be installed on the supply and return side of a heat exchanger.

Exception: Shutoff valves shall not be required where heat exchangers are integral with a boiler or are a component of a manufacturer's boiler and heat exchanger packaged unit and are capable of being isolated from the hydronic system by the supply and return valves required by Section M2001.3.

M2105.15.2 Central systems. Shutoff valves shall be installed on the building supply and return of a central utility system.

M2105.15.3 Pressure vessels. Shutoff valves shall be installed on the connection to any pressure vessel.

M2105.15.4 Pressure-reducing valves. Shutoff valves shall be installed on both sides of a pressure-reducing valve.

M2105.15.5 Equipment and appliances. Shutoff valves shall be installed on connections to mechanical equipment and appliances. This requirement does not apply to components of ground-source loop systems such as pumps, air separators, metering devices, and similar equipment.

M2105.15.6 Expansion tanks. Shutoff valves shall be installed at connections to nondiaphragm-type expansion tanks.

M2105.16 Reduced pressure. A pressure relief valve shall be installed on the low-pressure side of a hydronic piping system that has been reduced in pressure. The relief valve shall be set at the maximum pressure of the system design. The valve shall be installed in accordance with Section M2002.

M2105.17 Installation. Piping, valves, fittings, and connections shall be installed in accordance with the manufacturer's instructions.

M2105.18 Protection of potable water. Where ground-source heat-pump ground-loop systems have a connection to

a potable water supply, the potable water system shall be protected from backflow in accordance with Section P2902.

M2105.19 Pipe penetrations. Openings for pipe penetrations in walls, floors and ceilings shall be larger than the penetrating pipe. Openings through concrete or masonry building elements shall be sleeved. The annular space surrounding pipe penetrations shall be protected in accordance with Section P2606.1.

M2105.20 Clearance from combustibles. A pipe in a ground-source heat pump piping system having an exterior surface temperature exceeding 250°F (121°C) shall have a clearance of not less than 1 inch (25 mm) from combustible materials.

M2105.21 Contact with building material. A ground-source heat-pump ground-loop piping system shall not be in direct contact with building materials that cause the piping or fitting material to degrade or corrode, or that interfere with the operation of the system.

M2105.22 Strains and stresses. Piping shall be installed so as to prevent detrimental strains and stresses in the pipe. Provisions shall be made to protect piping from damage resulting from expansion, contraction and structural settlement. Piping shall be installed so as to avoid structural stresses or strains within building components.

M2105.22.1 Flood hazard. Piping located in a flood hazard area shall be capable of resisting hydrostatic and hydrodynamic loads and stresses, including the effects of buoyancy, during the occurrence of flooding to the *design flood elevation*.

M2105.23 Pipe support. Pipe shall be supported in accordance with Section M2101.9.

M2105.24 Velocities. Ground-source heat-pump ground-loop systems shall be designed so that the flow velocities do not exceed the maximum flow velocity recommended by the pipe and fittings manufacturer. Flow velocities shall be controlled to reduce the possibility of water hammer.

M2105.25 Labeling and marking. Ground-source heat-pump ground-loop system piping shall be marked with tape, metal tags or other methods where it enters a building. The marking shall state the following words: "GROUND-SOURCE HEAT-PUMP LOOP SYSTEM." The marking shall indicate if antifreeze is used in the system and shall indicate the chemicals by name and concentration.

M2105.26 Chemical compatibility. Antifreeze and other materials used in the system shall be chemically compatible with the pipe, tubing, fittings and mechanical systems.

M2105.27 Makeup water. The transfer fluid shall be compatible with the makeup water supplied to the system.

M2105.28 Testing. Before connection header trenches are backfilled, the assembled loop system shall be pressure tested with water at 100 psi (689 kPa) for 15 minutes without observed leaks. Flow and pressure loss testing shall be performed and the actual flow rates and pressure drops shall be compared to the calculated design values. If actual flow rate or pressure drop values differ from calculated design values by more than 10 percent, the cause shall be identified and corrective action taken.

M2105.29 Embedded piping. Ground-source heat-pump ground-loop piping to be embedded in concrete shall be pressure tested prior to pouring concrete. During pouring, the pipe shall be maintained at the proposed operating pressure.

CHAPTER 22

SPECIAL PIPING AND STORAGE SYSTEMS

SECTION M2201
OIL TANKS

M2201.1 Materials. Supply tanks shall be *listed* and *labeled* and shall conform to UL 58 for underground tanks and UL 80 for indoor tanks.

M2201.2 Above-ground tanks. The maximum amount of fuel oil stored above ground or inside of a building shall be 660 gallons (2498 L). The supply tank shall be supported on rigid noncombustible supports to prevent settling or shifting.

Exception: The storage of fuel oil, used for space or water heating, above ground or inside buildings in quantities exceeding 660 gallons (2498 L) shall comply with NFPA 31.

M2201.2.1 Tanks within buildings. Supply tanks for use inside of buildings shall be of such size and shape to permit installation and removal from *dwellings* as whole units. Supply tanks larger than 10 gallons (38 L) shall be placed not less than 5 feet (1524 mm) from any fire or flame either within or external to any fuel-burning *appliance*.

M2201.2.2 Outside above-ground tanks. Tanks installed outside above ground shall be a minimum of 5 feet (1524 mm) from an adjoining property line. Such tanks shall be suitably protected from the weather and from physical damage.

M2201.3 Underground tanks. Excavations for underground tanks shall not undermine the foundations of existing structures. The clearance from the tank to the nearest wall of a *basement*, pit or property line shall be not less than 1 foot (305 mm). Tanks shall be set on and surrounded with noncorrosive inert materials such as clean earth, sand or gravel well tamped in place. Tanks shall be covered with not less than 1 foot (305 mm) of earth. Corrosion protection shall be provided in accordance with Section M2203.7.

M2201.4 Multiple tanks. Cross connection of two supply tanks shall be permitted in accordance with Section M2203.6.

M2201.5 Oil gauges. Inside tanks shall be provided with a device to indicate when the oil in the tank has reached a predetermined safe level. Glass gauges or a gauge subject to breakage that could result in the escape of oil from the tank shall not be used. Liquid-level indicating gauges shall comply with UL 180.

M2201.6 Flood-resistant installation. In flood hazard areas as established by Table R301.2(1), tanks shall be installed at or above the elevation required in Section R322.2.1 or R322.3.2 or shall be anchored to prevent flotation, collapse and lateral movement under conditions of the design flood.

M2201.7 Tanks abandoned or removed. Exterior above-grade fill piping shall be removed when tanks are abandoned or removed. Tank abandonment and removal shall be in accordance with the *International Fire Code*.

SECTION M2202
OIL PIPING, FITTING AND CONNECTIONS

M2202.1 Materials. Piping shall consist of steel pipe, copper and copper alloy pipe and tubing or steel tubing conforming to ASTM A 539. Aluminum tubing shall not be used between the fuel-oil tank and the burner units.

M2202.2 Joints and fittings. Piping shall be connected with standard fittings compatible with the piping material. Cast iron fittings shall not be used for oil piping. Unions requiring gaskets or packings, right or left couplings, and sweat fittings employing solder having a melting point less than 1,000°F (538°C) shall not be used for oil piping. Threaded joints and connections shall be made tight with a lubricant or pipe thread compound.

M2202.3 Flexible connectors. Flexible metallic hoses shall be *listed* and *labeled* in accordance with UL 536 and shall be installed in accordance with their *listing* and *labeling* and the manufacturer's installation instructions. Connectors made from combustible materials shall not be used inside of buildings or above ground outside of buildings.

SECTION M2203
INSTALLATION

M2203.1 General. Piping shall be installed in a manner to avoid placing stresses on the piping, and to accommodate expansion and contraction of the piping system.

M2203.2 Supply piping. Supply piping used in the installation of oil burners and *appliances* shall be not smaller than $^3/_8$-inch (9 mm) pipe or $^3/_8$-inch (9 mm) outside diameter tubing. Copper tubing and fittings shall be a minimum of Type L.

M2203.3 Fill piping. Fill piping shall terminate outside of buildings at a point not less than 2 feet (610 mm) from any building opening at the same or lower level. Fill openings shall be equipped with a tight metal cover.

M2203.4 Vent piping. Vent piping shall be not smaller than $1^1/_4$-inch (32 mm) pipe. Vent piping shall be laid to drain toward the tank without sags or traps in which the liquid can collect. Vent pipes shall not be cross connected with fill pipes, lines from burners or overflow lines from auxiliary tanks. The lower end of a vent pipe shall enter the tank through the top and shall extend into the tank not more than 1 inch (25 mm).

M2203.5 Vent termination. Vent piping shall terminate outside of buildings at a point not less than 2 feet (610 mm), measured vertically or horizontally, from any building opening. Outer ends of vent piping shall terminate in a weatherproof cap or fitting having an unobstructed area at least equal to the cross-sectional area of the vent pipe, and shall be located sufficiently above the ground to avoid being obstructed by snow and ice.

M2203.6 Cross connection of tanks. Cross connection of two supply tanks, not exceeding 660 gallons (2498 L) aggregate capacity, with gravity flow from one tank to another, shall be acceptable providing that the two tanks are on the same horizontal plane.

M2203.7 Corrosion protection. Underground tanks and buried piping shall be protected by corrosion-resistant coatings or special alloys or fiberglass-reinforced plastic.

SECTION M2204
OIL PUMPS AND VALVES

M2204.1 Pumps. Oil pumps shall be positive displacement types that automatically shut off the oil supply when stopped. Automatic pumps shall be *listed* and *labeled* in accordance with UL 343 and shall be installed in accordance with their *listing*.

M2204.2 Shutoff valves. A *readily accessible* manual shutoff valve shall be installed between the oil supply tank and the burner. Where the shutoff valve is installed in the discharge line of an oil pump, a pressure-relief valve shall be incorporated to bypass or return surplus oil. Valves shall comply with UL 842.

M2204.3 Maximum pressure. Pressure at the oil supply inlet to an *appliance* shall be not greater than 3 pounds per square inch (20.7 kPa).

M2204.4 Relief valves. Fuel-oil lines incorporating heaters shall be provided with relief valves that will discharge to a return line when excess pressure exists.

CHAPTER 23

SOLAR THERMAL ENERGY SYSTEMS

SECTION M2301
THERMAL SOLAR ENERGY SYSTEMS

M2301.1 General. This section provides for the design, construction, installation, *alteration* and repair of *equipment* and systems using thermal solar energy to provide space heating or cooling, hot water heating and swimming pool heating.

M2301.2 Design and installation. The design and installation of thermal solar energy systems shall comply with Sections M2301.2.1 through M2301.2.13.

M2301.2.1 Access. Solar energy collectors, controls, dampers, fans, blowers and pumps shall be accessible for inspection, maintenance, repair and replacement.

M2301.2.2 Collectors and panels. Solar collectors and panels shall comply with Sections M2301.2.2.1 and M2301.2.2.2.

M2301.2.2.1 Roof-mounted collectors. The roof shall be constructed to support the loads imposed by roof-mounted solar collectors. Roof-mounted solar collectors that serve as a roof covering shall conform to the requirements for roof coverings in Chapter 9 of this code. Where mounted on or above the roof coverings, the collectors and supporting structure shall be constructed of noncombustible materials or fire-retardant-treated wood equivalent to that required for the roof construction.

M2301.2.2.2 Collector sensors. Collector sensor installation, sensor location and the protection of exposed sensor wires from ultraviolet light shall be in accordance with SRCC 300.

M2301.2.3 Pressure and temperature relief valves and system components. System components containing fluids shall be protected with temperature and pressure relief valves or pressure relief valves. Relief devices shall be installed in sections of the system so that a section cannot be valved off or isolated from a relief device. Direct systems and the potable water portion of indirect systems shall be equipped with a relief valve in accordance with Section P2804. For indirect systems, pressure relief valves in solar loops shall comply with SRCC 300. System components shall have a working pressure rating of not less than the setting of the pressure relief device.

M2301.2.4 Vacuum relief. System components that might be subjected to pressure drops below atmospheric pressure during operation or shutdown shall be protected by a vacuum-relief valve.

M2301.2.5 Piping insulation. Piping shall be insulated in accordance with the requirements of Chapter 11. Exterior insulation shall be protected from ultraviolet degradation. The entire solar loop shall be insulated. Where split-style insulation is used, the seam shall be sealed. Fittings shall be fully insulated.

Exceptions:

1. Those portions of the piping that are used to help prevent the system from overheating shall not be required to be insulated.
2. Those portions of piping that are exposed to solar radiation, made of the same material as the solar collector absorber plate and are covered in the same manner as the solar collector absorber, or that are used to collect additional solar energy, shall not be required to be insulated.
3. Piping in thermal solar systems using unglazed solar collectors to heat a swimming pool shall not be required to be insulated.

M2301.2.6 Protection from freezing. System components shall be protected from damage resulting from freezing of heat-transfer liquids at the winter design temperature provided in Table R301.2(1). Freeze protection shall be provided by heating, insulation, thermal mass and heat transfer fluids with freeze points lower than the winter design temperature, heat tape or other *approved* methods, or combinations thereof.

Exception: Where the winter design temperature is greater than 32°F (0°C).

M2301.2.7 Storage tank sensors. Storage tank sensors shall comply with SRCC 300.

M2301.2.8 Expansion tanks. Expansion tanks in solar energy systems shall be installed in accordance with Section M2003 in solar collector loops that contain pressurized heat transfer fluid. Where expansion tanks are used, the system shall be designed in accordance with SRCC 300 to provide an expansion tank that is sized to withstand the maximum operating pressure of the system.

Exception: Expansion tanks shall not be required in *drain-back systems*.

M2301.2.9 Roof and wall penetrations. Roof and wall penetrations shall be flashed and sealed in accordance with Chapter 9 of this code to prevent entry of water, rodents and insects.

M2301.2.10 Description and warning labels. Solar thermal systems shall comply with description label and warning label requirements of Section M2301.2.11.2 and SRCC 300.

M2301.2.11 Solar loop. Solar loops shall be in accordance with Sections M2301.2.11.1 and M2301.2.11.2.

M2301.2.11.1 Solar loop isolation. Valves shall be installed to allow the solar collectors to be isolated from the remainder of the system.

M2301.2.11.2 Drain and fill valve labels and caps. Drain and fill valves shall be labeled with a description and warning that identifies the fluid in the solar loop

and a warning that the fluid might be discharged at high temperature and pressure. Drain caps shall be installed at drain and fill valves.

M2301.2.12 Maximum temperature limitation. Systems shall be equipped with means to limit the maximum water temperature of the system fluid entering or exchanging heat with any pressurized vessel inside the *dwelling* to 180°F (82°C). This protection is in addition to the required temperature- and pressure-relief valves required by Section M2301.2.3.

M2301.2.13 Thermal storage unit seismic bracing. In Seismic Design Categories D_0, D_1 and D_2 and in townhouses in Seismic Design Category C, thermal storage units shall be anchored in accordance with Section M1307.2.

M2301.3 Labeling. *Labeling* shall comply with Sections M2301.3.1 and M2301.3.2.

M2301.3.1 Collectors and panels. Solar thermal collectors and panels shall be listed and labeled in accordance with SRCC 100 or SRCC 600. Collectors and panels shall be *listed* and *labeled* to show the manufacturer's name, model number, serial number, collector weight, collector maximum allowable temperatures and pressures, and the type of heat transfer fluids that are compatible with the collector or panel. The *label* shall clarify that these specifications apply only to the collector or panel.

M2301.3.2 Thermal storage units. Pressurized thermal storage units shall be *listed* and *labeled* to show the manufacturer's name, model number, serial number, storage unit maximum and minimum allowable operating temperatures and pressures, and the type of heat transfer fluids that are compatible with the storage unit. The *label* shall clarify that these specifications apply only to the thermal storage unit.

M2301.4 Heat transfer gasses or liquids and heat exchangers. *Essentially toxic transfer fluids*, ethylene glycol, flammable gases and flammable liquids shall not be used as heat transfer fluids. Heat transfer gasses and liquids shall be rated to withstand the system's maximum design temperature under operating conditions without degradation. Heat exchangers used in solar thermal systems shall comply with Section P2902.5.2 and SRCC 300.

Heat transfer fluids shall be in accordance with SRCC 300. The flash point of the heat transfer fluids utilized in solar thermal systems shall be not less than 50°F (28°C) above the design maximum nonoperating or no-flow temperature attained by the fluid in the collector.

M2301.5 Backflow protection. Connections from the potable water supply to solar systems shall comply with Section P2902.5.5.

M2301.6 Filtering. Air provided to occupied spaces that passes through thermal mass storage systems by mechanical means shall be filtered for particulates at the outlet of the thermal mass storage system.

M2301.7 Solar thermal systems for heating potable water. Where a solar thermal system heats potable water to supply a potable hot water distribution system, the solar thermal system shall be in accordance with Sections M2301.7.1, M2301.7.2 and P2902.5.5.

M2301.7.1 Indirect systems. Heat exchangers that are components of indirect solar thermal heating systems shall comply with Section P2902.5.2.

M2301.7.2 Direct systems. Where potable water is directly heated by a solar thermal system, the pipe, fittings, valves and other components that are in contact with the potable water in the solar heating system shall comply with the requirements of Chapter 29.

Part VI—Fuel Gas

CHAPTER 24

FUEL GAS

The text of this chapter is extracted from the 2015 edition of the *International Fuel Gas Code* and has been modified where necessary to conform to the scope of application of the *International Residential Code for One- and Two-Family Dwellings*. The section numbers appearing in parentheses after each section number are the section numbers of the corresponding text in the *International Fuel Gas Code.*

SECTION G2401 (101) GENERAL

G2401.1 (101.2) Application. This chapter covers those fuel gas *piping systems*, fuel-gas *appliances* and related accessories, *venting systems* and *combustion air* configurations most commonly encountered in the construction of one- and two-family dwellings and structures regulated by this *code*.

Coverage of *piping systems* shall extend from the *point of delivery* to the outlet of the *appliance* shutoff *valves* (see definition of *"Point of delivery"*). *Piping systems* requirements shall include design, materials, components, fabrication, assembly, installation, testing, inspection, operation and maintenance. Requirements for gas *appliances* and related accessories shall include installation, combustion and ventilation air and venting and connections to *piping systems*.

The omission from this chapter of any material or method of installation provided for in the *International Fuel Gas Code* shall not be construed as prohibiting the use of such material or method of installation. Fuel-gas *piping systems*, fuel-gas *appliances* and related accessories, *venting systems* and *combustion air* configurations not specifically covered in these chapters shall comply with the applicable provisions of the *International Fuel Gas Code*.

Gaseous hydrogen systems shall be regulated by Chapter 7 of the *International Fuel Gas Code*.

This chapter shall not apply to the following:

1. Liquified natural gas (LNG) installations.
2. Temporary LP-*gas piping* for buildings under construction or renovation that is not to become part of the permanent *piping system.*
3. Except as provided in Section G2412.1.1, gas *piping*, meters, gas pressure regulators, and other appurtenances used by the serving gas supplier in the distribution of gas, other than undiluted LP-gas.
4. Portable LP-gas *appliances* and *equipment* of all types that is not connected to a fixed fuel *piping system.*
5. Portable fuel cell *appliances* that are neither connected to a fixed *piping system* nor interconnected to a power grid.
6. Installation of hydrogen gas, LP-gas and compressed natural gas (CNG) systems on vehicles.

SECTION G2402 (201) GENERAL

G2402.1 (201.1) Scope. Unless otherwise expressly stated, the following words and terms shall, for the purposes of this chapter, have the meanings indicated in this chapter.

G2402.2 (201.2) Interchangeability. Words used in the present tense include the future; words in the masculine gender include the feminine and neuter; the singular number includes the plural and the plural, the singular.

G2402.3 (201.3) Terms defined in other codes. Where terms are not defined in this code and are defined in the *International Building Code*, *International Fire Code*, *International Mechanical Code, International Fuel Gas Code* or *International Plumbing Code*, such terms shall have meanings ascribed to them as in those *codes*.

SECTION G2403 (202) GENERAL DEFINITIONS

ACCESS (TO). That which enables a device, *appliance* or *equipment* to be reached by ready *access* or by a means that first requires the removal or movement of a panel, door or similar obstruction (see also "Ready *access*").

AIR CONDITIONER, GAS-FIRED. A gas-burning, automatically operated *appliance* for supplying cooled and/or dehumidified air or chilled liquid.

AIR CONDITIONING. The treatment of air so as to control simultaneously the temperature, humidity, cleanness and distribution of the air to meet the requirements of a conditioned space.

AIR, EXHAUST. Air being removed from any space or piece of *equipment* or *appliance* and conveyed directly to the atmosphere by means of openings or ducts.

AIR-HANDLING UNIT. A blower or fan used for the purpose of distributing supply air to a room, space or area.

AIR, MAKEUP. Any combination of outdoor and transfer air intended to replace exhaust air and exfiltration.

ALTERATION. A change in a system that involves an extension, addition or change to the arrangement, type or purpose of the original installation.

ANODELESS RISER. A transition assembly in which plastic *piping* is installed and terminated above ground outside of a building.

APPLIANCE. Any apparatus or device that utilizes a fuel or raw material to produce light, heat, power, refrigeration or air conditioning.

APPLIANCE, AUTOMATICALLY CONTROLLED. Appliances equipped with an automatic *burner* ignition and safety shut-off device and other automatic devices, which accomplish complete turn-on and shut-off of the gas to the *main burner* or *burners*, and graduate the gas supply to the *burner* or *burners*, but do not affect complete shut-off of the gas.

APPLIANCE, FAN-ASSISTED COMBUSTION. An *appliance* equipped with an integral mechanical means to either draw or force products of combustion through the combustion chamber or heat exchanger.

APPLIANCE, UNVENTED. An *appliance* designed or installed in such a manner that the products of combustion are not conveyed by a vent or *chimney* directly to the outside atmosphere.

APPLIANCE, VENTED. An *appliance* designed and installed in such a manner that all of the products of combustion are conveyed directly from the *appliance* to the outside atmosphere through an *approved chimney* or vent system.

APPROVED. Acceptable to the *code official.*

APPROVED AGENCY. An established and recognized agency that is regularly engaged in conducting tests or furnishing inspection services, where such agency has been approved by the *code official.*

ATMOSPHERIC PRESSURE. The pressure of the weight of air and water vapor on the surface of the earth, approximately 14.7 pounds per square inch (psia) (101 kPa absolute) at sea level.

AUTOMATIC IGNITION. Ignition of gas at the *burner(s)* when the gas controlling device is turned on, including reignition if the flames on the *burner(s)* have been extinguished by means other than by the closing of the gas controlling device.

BAROMETRIC DRAFT REGULATOR. A balanced *damper* device attached to a *chimney,* vent *connector,* breeching or flue gas manifold to protect combustion *appliances* by controlling *chimney draft.* A double-acting *barometric draft regulator* is one whose balancing *damper* is free to move in either direction to protect combustion *appliances* from both excessive *draft* and backdraft.

BOILER, LOW-PRESSURE. A self-contained *appliance* for supplying steam or hot water.

Hot water heating boiler. A boiler in which no steam is generated, from which hot water is circulated for heating purposes and then returned to the boiler, and that operates at water pressures not exceeding 160 pounds per square inch gauge (psig) (1100 kPa gauge) and at water temperatures not exceeding 250°F (121°C) at or near the boiler outlet.

Hot water supply boiler. A boiler, completely filled with water, which furnishes hot water to be used externally to itself, and that operates at water pressures not exceeding 160 psig (1100 kPa gauge) and at water temperatures not exceeding 250°F (121°C) at or near the boiler outlet.

Steam heating boiler. A boiler in which steam is generated and that operates at a steam pressure not exceeding 15 psig (100 kPa gauge).

BONDING JUMPER. A conductor installed to electrically connect metallic gas *piping* to the grounding electrode system.

BRAZING. A metal-joining process wherein coalescence is produced by the use of a nonferrous filler metal having a melting point above 1,000°F (538°C), but lower than that of the base metal being joined. The filler material is distributed between the closely fitted surfaces of the joint by capillary action.

BTU. Abbreviation for British thermal unit, which is the quantity of heat required to raise the temperature of 1 pound (454 g) of water 1°F (0.56°C) (1 *Btu* = 1055 J).

BURNER. A device for the final conveyance of the gas, or a mixture of gas and air, to the combustion zone.

Induced-draft. A *burner* that depends on *draft* induced by a fan that is an integral part of the *appliance* and is located downstream from the *burner.*

Power. A *burner* in which gas, air or both are supplied at pressures exceeding, for gas, the line pressure, and for air, atmospheric pressure, with this added pressure being applied at the *burner.*

CHIMNEY. A primarily vertical structure containing one or more flues, for the purpose of carrying gaseous products of *combustion* and air from an *appliance* to the outside atmosphere.

Factory-built chimney. A *listed* and *labeled* chimney composed of factory-made components, assembled in the field in accordance with manufacturer's instructions and the conditions of the listing.

Masonry chimney. A field-constructed chimney composed of solid masonry units, bricks, stones or concrete.

CLEARANCE. The minimum distance through air measured between the heat-producing surface of the mechanical *appliance,* device or *equipment* and the surface of the *combustible material* or *assembly.*

CLOTHES DRYER. An *appliance* used to dry wet laundry by means of heated air.

Type 1. Factory-built package, multiple production. Primarily used in the family living environment. Usually the smallest unit physically and in function output.

CODE. These regulations, subsequent amendments thereto, or any emergency rule or regulation that the administrative authority having jurisdiction has lawfully adopted.

CODE OFFICIAL. The officer or other designated authority charged with the administration and enforcement of this code, or a duly authorized representative.

COMBUSTIBLE ASSEMBLY. Wall, floor, ceiling or other assembly constructed of one or more component materials that are not defined as noncombustible.

COMBUSTIBLE MATERIAL. Any material not defined as noncombustible.

COMBUSTION. In the context of this code, refers to the rapid oxidation of fuel accompanied by the production of heat or heat and light.

COMBUSTION AIR. Air necessary for complete combustion of a fuel, including theoretical air and excess air.

COMBUSTION CHAMBER. The portion of an *appliance* within which combustion occurs.

COMBUSTION PRODUCTS. Constituents resulting from the combustion of a fuel with the oxygen of the air, including the inert gases, but excluding excess air.

CONCEALED LOCATION. A location that cannot be accessed without damaging permanent parts of the building structure or finish sufface. Spaces above, below or behind readily removable panels or doors shall not be considered as concealed.

CONCEALED PIPING. *Piping* that is located in a *concealed location* (see *"Concealed location"*).

CONDENSATE. The liquid that condenses from a gas (including flue gas) caused by a reduction in temperature or increase in pressure.

CONNECTOR, APPLIANCE (Fuel). Rigid metallic *pipe* and fittings, semirigid metallic *tubing* and fittings or a *listed* and *labeled* device that connects an *appliance* to the *gas piping system.*

CONNECTOR, CHIMNEY OR VENT. The *pipe* that connects an *appliance* to a chimney or vent.

CONTROL. A manual or automatic device designed to regulate the gas, air, water or electrical supply to, or operation of, a mechanical system.

CONVERSION BURNER. A unit consisting of a *burner* and its *controls* for installation in an *appliance* originally utilizing another fuel.

CUBIC FOOT. The amount of gas that occupies 1 cubic foot (0.02832 m^3) when at a temperature of 60°F (16°C), saturated with water vapor and under a pressure equivalent to that of 30 inches of mercury (101 kPa).

DAMPER. A manually or automatically controlled device to regulate *draft* or the rate of flow of air or combustion gases.

DECORATIVE APPLIANCE, VENTED. A *vented appliance* wherein the primary function lies in the aesthetic effect of the flames.

DECORATIVE APPLIANCES FOR INSTALLATION IN VENTED FIREPLACES. A *vented appliance* designed for installation within the fire chamber of a vented *fireplace*, wherein the primary function lies in the aesthetic effect of the flames.

DEMAND. The maximum amount of gas input required per unit of time, usually expressed in cubic feet per hour, or *Btu*/h (1 *Btu*/h = 0.2931 W).

DESIGN FLOOD ELEVATION. The elevation of the "design flood," including wave height, relative to the datum specified on the community's legally designated flood hazard map. In areas designated as Zone AO, the *design flood elevation* shall be the elevation of the highest existing grade of the *building's* perimeter plus the depth number, in feet, specified on the flood hazard map. In areas designated as Zone AO where a depth number is not specified on the map, the depth number shall be taken as being equal to 2 feet (610 mm).

DILUTION AIR. Air that is introduced into a *draft hood* and is mixed with the *flue gases.*

DIRECT-VENT APPLIANCES. *Appliances* that are constructed and installed so that all air for combustion is derived directly from the outside atmosphere and all *flue gases* are discharged directly to the outside atmosphere.

DRAFT. The pressure difference existing between the *appliance* or any component part and the atmosphere, that causes a continuous flow of air and products of combustion through the gas passages of the *appliance* to the atmosphere.

Mechanical or induced draft. The pressure difference created by the action of a fan, blower or ejector that is located between the *appliance* and the chimney or vent termination.

Natural draft. The pressure difference created by a vent or chimney because of its height, and the temperature difference between the *flue gases* and the atmosphere.

DRAFT HOOD. A nonadjustable device built into an *appliance*, or made as part of the *vent connector* from an *appliance*, that is designed to (1) provide for ready escape of the *flue gases* from the *appliance* in the event of no *draft*, backdraft, or stoppage beyond the *draft hood*, (2) prevent a backdraft from entering the *appliance*, and (3) neutralize the effect of stack action of the chimney or gas vent upon operation of the *appliance*.

DRAFT REGULATOR. A device that functions to maintain a desired *draft* in the *appliance* by automatically reducing the *draft* to the desired value.

DRIP. The container placed at a low point in a system of *piping* to collect *condensate* and from which the *condensate* is removable.

DUCT FURNACE. A warm-air *furnace* normally installed in an air-distribution duct to supply warm air for heating. This definition shall apply only to a warm-air heating *appliance* that depends for air circulation on a blower not furnished as part of the *furnace.*

DWELLING UNIT. A single unit providing complete, independent living facilities for one or more persons, including permanent provisions for living, sleeping, eating, cooking and sanitation.

EQUIPMENT. Apparatus and devices other than *appliances.*

EXCESS FLOW VALVE (EFV). A valve designed to activate when the fuel gas passing through it exceeds a prescribed flow rate.

EXTERIOR MASONRY CHIMNEYS. Masonry chimneys exposed to the outdoors on one or more sides below the roof line.

FIREPLACE. A fire chamber and hearth constructed of *noncombustible material* for use with solid fuels and provided with a chimney.

Factory-built fireplace. A *fireplace* composed of *listed* factory-built components assembled in accordance with the terms of listing to form the completed *fireplace.*

Masonry fireplace. A hearth and fire chamber of solid masonry units such as bricks, stones, *listed* masonry units or reinforced concrete, provided with a suitable chimney.

FLAME SAFEGUARD. A device that will automatically shut off the fuel supply to a *main burner* or group of *burners* when the means of ignition of such *burners* becomes inoperative, and when flame failure occurs on the *burner* or group of *burners.*

FLASHBACK ARRESTOR CHECK VALVE. A device that will prevent the backflow of one gas into the supply system of another gas and prevent the passage of flame into the gas supply system.

FLOOD HAZARD AREA. The greater of the following two areas:

1. The area within a floodplain subject to a 1 percent or greater chance of flooding in any given year.
2. This area designated as a *flood hazard area* on a community's flood hazard map, or otherwise legally designated.

FLOOR FURNACE. A completely self-contained *furnace* suspended from the floor of the space being heated, taking air for combustion from outside such space and with means for observing flames and lighting the *appliance* from such space.

FLUE, APPLIANCE. The passage(s) within an *appliance* through which *combustion products* pass from the *combustion chamber* of the *appliance* to the *draft hood* inlet opening on an *appliance* equipped with a *draft hood* or to the outlet of the *appliance* on an *appliance* not equipped with a *draft hood.*

FLUE COLLAR. That portion of an *appliance* designed for the attachment of a *draft hood, vent connector* or venting system.

FLUE GASES. Products of combustion plus excess air in *appliance flues* or heat exchangers.

FLUE LINER (LINING). A system or material used to form the inside surface of a flue in a *chimney* or vent, for the purpose of protecting the surrounding structure from the effects of *combustion products* and for conveying *combustion products* without leakage to the atmosphere.

FUEL GAS. A natural gas, manufactured gas, *liquefied petroleum gas* or mixtures of these gases.

FURNACE. A completely self-contained heating unit that is designed to supply heated air to spaces remote from or adjacent to the *appliance* location.

FURNACE, CENTRAL. A self-contained *appliance* for heating air by transfer of heat of *combustion* through metal to the air, and designed to supply heated air through ducts to spaces remote from or adjacent to the *appliance* location.

FURNACE PLENUM. An air compartment or chamber to which one or more ducts are connected and which forms part of an air distribution system.

GAS CONVENIENCE OUTLET. A permanently mounted, manually operated device that provides the means for connecting an *appliance* to, and disconnecting an *appliance* from, the supply *piping*. The device includes an integral, manually operated valve with a nondisplaceable valve member and is designed so that disconnection of an *appliance* only occurs when the manually operated valve is in the closed position.

GAS PIPING. An installation of pipe, valves or fittings installed on a premises or in a building and utilized to convey fuel gas.

HAZARDOUS LOCATION. Any location considered to be a fire hazard for flammable vapors, dust, combustible fibers or other highly combustible substances. The location is not necessarily categorized in the *International Building Code* as a high-hazard use group classification.

HOUSE PIPING. See *"Piping system."*

IGNITION PILOT. A *pilot* that operates during the lighting cycle and discontinues during *main burner* operation.

IGNITION SOURCE. A flame spark or hot surface capable of igniting flammable vapors or fumes. Such sources include *appliance burners, burner* ignitors and electrical switching devices.

INFRARED RADIANT HEATER. A heater which directs a substantial amount of its energy output in the form of infrared radiant energy into the area to be heated. Such heaters are of either the vented or unvented type.

JOINT, FLARED. A metal-to-metal compression joint in which a conical spread is made on the end of a tube that is compressed by a flare nut against a mating flare.

JOINT, MECHANICAL. A general form of gas-tight joints obtained by the joining of metal parts through a positive-holding mechanical construction, such as press joint, flanged joint, threaded joint, flared joint or compression joint.

JOINT, PLASTIC ADHESIVE. A joint made in thermoset plastic *piping* by the use of an adhesive substance which forms a continuous bond between the mating surfaces without dissolving either one of them.

LABELED. Equipment, materials or products to which have been affixed a label, seal, symbol or other identifying mark of a nationally recognized testing laboratory, inspection agency or other organization concerned with product evaluation that maintains periodic inspection of the production of the above-labeled items and whose labeling indicates either that the *equipment*, material or product meets identified standards or has been tested and found suitable for a specified purpose.

LEAK CHECK. An operation performed on a gas *piping system* to verify that the system does not leak.

LIQUEFIED PETROLEUM GAS or LPG (LP-GAS). *Liquefied petroleum gas* composed predominately of propane, propylene, butanes or butylenes, or mixtures thereof that is gaseous under normal atmospheric conditions, but is capable of being liquefied under moderate pressure at normal temperatures.

LISTED. Equipment, materials, products or services included in a list published by an organization acceptable to the code official and concerned with evaluation of products or services that maintains periodic inspection of production of *listed equipment* or materials or periodic evaluation of services and whose listing states either that the *equipment*, material, product or service meets identified standards or has been tested and found suitable for a specified purpose.

LIVING SPACE. Space within a *dwelling unit* utilized for living, sleeping, eating, cooking, bathing, washing and sanitation purposes.

LOG LIGHTER. A manually operated solid-fuel ignition *appliance* for installation in a vented solid-fuel-burning *fireplace*.

MAIN BURNER. A device or group of devices essentially forming an integral unit for the final conveyance of gas or a mixture of gas and air to the combustion zone, and on which combustion takes place to accomplish the function for which the *appliance* is designed.

METER. The instrument installed to measure the volume of gas delivered through it.

MODULATING. Modulating or throttling is the action of a *control* from its maximum to minimum position in either predetermined steps or increments of movement as caused by its actuating medium.

NONCOMBUSTIBLE MATERIALS. Materials that, when tested in accordance with ASTM E 136, have at least three of four specimens tested meeting all of the following criteria:

1. The recorded temperature of the surface and interior thermocouples shall not at any time during the test rise more than 54°F (30°C) above the furnace temperature at the beginning of the test.
2. There shall not be flaming from the specimen after the first 30 seconds.
3. If the weight loss of the specimen during testing exceeds 50 percent, the recorded temperature of the surface and interior thermocouples shall not at any time during the test rise above the furnace air temperature at the beginning of the test, and there shall not be flaming of the specimen.

OFFSET (VENT). A combination of *approved* bends that make two changes in direction bringing one section of the vent out of line, but into a line parallel with the other section.

OUTLET. The point at which a gas-fired *appliance* connects to the gas *piping system*.

OXYGEN DEPLETION SAFETY SHUTOFF SYSTEM (ODS). A system designed to act to shut off the gas supply to the main and *pilot burners* if the oxygen in the surrounding atmosphere is reduced below a predetermined level.

PILOT. A small flame that is utilized to ignite the gas at the *main burner* or *burners*.

PIPING. Where used in this code, *"piping"* refers to either *pipe* or *tubing*, or both.

Pipe. A rigid conduit of iron, steel, copper, brass or plastic.

Tubing. Semirigid conduit of copper, aluminum, plastic or steel.

PIPING SYSTEM. All fuel *piping*, valves and fittings from the outlet of the *point of delivery* to the outlets of the *appliance* shutoff valves.

PLASTIC, THERMOPLASTIC. A plastic that is capable of being repeatedly softened by increase of temperature and hardened by decrease of temperature.

POINT OF DELIVERY. For natural gas systems, the *point of delivery* is the outlet of the service meter assembly or the outlet of the service regulator or service shutoff valve where a meter is not provided. Where a valve is provided at the outlet of the service meter assembly, such valve shall be considered to be downstream of the *point of delivery*. For undiluted liquefied petroleum gas systems, the point of delivery shall be considered to be the outlet of the service pressure regulator, exclusive of line gas regulators, in the system.

PRESSURE DROP. The loss in pressure due to friction or obstruction in pipes, valves, fittings, *regulators* and *burners*.

PRESSURE TEST. An operation performed to verify the gas-tight integrity of *gas piping* following its installation or modification.

PURGE. To free a gas conduit of air or gas, or a mixture of gas and air.

READY ACCESS (TO). That which enables a device, *appliance* or *equipment* to be directly reached, without requiring the removal or movement of any panel, door or similar obstruction. (See "Access.")

REGULATOR. A device for controlling and maintaining a uniform gas supply pressure, either pounds-to-inches water column (MP regulator) or inches-to-inches water column (*appliance regulator*).

REGULATOR, GAS APPLIANCE. A *pressure regulator* for controlling pressure to the manifold of the gas *appliance*.

REGULATOR, LINE GAS PRESSURE. A device placed in a gas line between the *service pressure regulator* and the *appliance* for controlling, maintaining or reducing the pressure in that portion of the *piping system* downstream of the device.

REGULATOR, MEDIUM-PRESSURE (MP Regulator). A line *pressure regulator* that reduces gas pressure from the range of greater than 0.5 psig (3.4 kPa) and less than or equal to 5 psig (34.5 kPa) to a lower pressure.

REGULATOR, PRESSURE. A device placed in a gas line for reducing, controlling and maintaining the pressure in that portion of the *piping system* downstream of the device.

REGULATOR, SERVICE PRESSURE. For natural gas systems, a device installed by the serving gas supplier to reduce and limit the service line pressure to delivery pressure. For undiluted liquefied petroleum gas systems, the regulator located upstream from all line gas pressure regulators, where installed, and downstream from any first stage or a high pressure regulator in the system.

RELIEF OPENING. The opening provided in a *draft hood* to permit the ready escape to the atmosphere of the flue products from the *draft hood* in the event of no *draft*, backdraft or stoppage beyond the *draft hood*, and to permit air into the *draft hood* in the event of a strong chimney updraft.

RELIEF VALVE (DEVICE). A safety valve designed to forestall the development of a dangerous condition by relieving either pressure, temperature or vacuum in the hot water supply system.

RELIEF VALVE, PRESSURE. An *automatic valve* that opens and closes a relief vent, depending on whether the pressure is above or below a predetermined value.

RELIEF VALVE, TEMPERATURE.

Manual reset type. A valve that automatically opens a *relief* vent at a predetermined temperature and that must be manually returned to the closed position.

Reseating or self-closing type. An *automatic valve* that opens and closes a relief vent, depending on whether the temperature is above or below a predetermined value.

RELIEF VALVE, VACUUM. A valve that automatically opens and closes a vent for relieving a vacuum within the hot water supply system, depending on whether the vacuum is above or below a predetermined value.

RISER, GAS. A vertical *pipe* supplying fuel gas.

ROOM HEATER, UNVENTED. See *"Unvented room heater."*

ROOM HEATER, VENTED. A free-standing heating unit used for direct heating of the space in and adjacent to that in which the unit is located. (See also "Vented room heater.")

SAFETY SHUTOFF DEVICE. See "Flame safeguard."

SHAFT. An enclosed space extending through one or more stories of a building, connecting vertical openings in successive floors, or floors and the roof.

SPECIFIC GRAVITY. As applied to gas, *specific gravity* is the ratio of the weight of a given volume to that of the same volume of air, both measured under the same condition.

THERMOSTAT.

Electric switch type. A device that senses changes in temperature and controls electrically, by means of separate components, the flow of gas to the *burner(s)* to maintain selected temperatures.

Integral gas valve type. An automatic device, actuated by temperature changes, designed to control the gas supply to the *burner(s)* in order to maintain temperatures between predetermined limits, and in which the thermal actuating element is an integral part of the device.

1. Graduating thermostat. A thermostat in which the motion of the *valve* is approximately in direct proportion to the effective motion of the thermal element induced by temperature change.
2. Snap-acting thermostat. A thermostat in which the thermostatic valve travels instantly from the closed to the open position, and vice versa.

THIRD-PARTY CERTIFICATION AGENCY. An approved agency operating a product or material certification system that incorporates initial product testing, assessment and surveillance of a manufacturer's quality control system.

THIRD-PARTY CERTIFIED. Certification obtained by the manufacturer indicating that the function and performance characteristics of a product or material have been determined by testing and ongoing surveillance by an approved third-party certification agency. Assertion of certification is in the form of identification in accordance with the requirements of the third-party certification agency.

THIRD-PARTY TESTED. Procedure by which an approved testing laboratory provides documentation that a product, material or system conforms to specified requirements.

TRANSITION FITTINGS, PLASTIC TO STEEL. An adapter for joining plastic *pipe* to steel *pipe*. The purpose of this fitting is to provide a permanent, pressure-tight connection between two materials that cannot be joined directly one to another.

UNIT HEATER.

High-static pressure type. A self-contained, automatically controlled, vented *appliance* having integral means for circulation of air against 0.2 inch w.c. (50 Pa) or greater static pressure. Such *appliance* is equipped with provisions for attaching an outlet air duct and, where the *appliance* is for indoor installation remote from the space to be heated, is also equipped with provisions for attaching an inlet air duct.

Low-static pressure type. A self-contained, automatically controlled, vented *appliance*, intended for installation in the space to be heated without the use of ducts, having integral means for circulation of air. Such units are allowed to be equipped with louvers or face extensions made in accordance with the manufacturer's specifications.

UNVENTED ROOM HEATER. An unvented heating *appliance* designed for stationary installation and utilized to provide comfort heating. Such *appliances* provide radiant heat or convection heat by gravity or fan circulation directly from the heater and do not utilize ducts.

VALVE. A device used in *piping* to control the gas supply to any section of a system of *piping* or to an *appliance*.

Appliance shutoff. A *valve* located in the *piping system*, used to isolate individual *appliances* for purposes such as service or replacement.

Automatic. An automatic or semiautomatic device consisting essentially of a *valve* and an operator that control the gas supply to the *burner(s)* during operation of an

appliance. The operator shall be actuated by application of gas pressure on a flexible diaphragm, by electrical means, by mechanical means or by other *approved* means.

Automatic gas shutoff. A *valve* used in conjunction with an automatic gas shutoff device to shut off the gas supply to a water-heating system. It shall be constructed integrally with the gas shutoff device or shall be a separate assembly.

Individual main burner. A *valve* that controls the gas supply to an individual *main burner*.

Main burner control. A *valve* that controls the gas supply to the *main burner* manifold.

Manual main gas-control. A manually operated *valve* in the gas line for the purpose of completely turning on or shutting off the gas supply to the *appliance*, except to *pilot* or pilots that are provided with independent shutoff.

Manual reset. An automatic shutoff valve installed in the gas supply *piping* and set to shut off when unsafe conditions occur. The device remains closed until manually reopened.

Service shutoff. A valve, installed by the serving gas supplier between the service meter or source of supply and the customer *piping system*, to shut off the entire *piping system*.

VENT. A *pipe* or other conduit composed of factory-made components, containing a passageway for conveying *combustion products* and air to the atmosphere, *listed* and *labeled* for use with a specific type or class of *appliance*.

Special gas vent. A vent *listed* and *labeled* for use with *listed* Category II, III and IV gas *appliances*.

Type B vent. A vent *listed* and *labeled* for use with *appliances* with *draft hoods* and other Category I *appliances* that are *listed* for use with Type B vents.

Type BW vent. A vent *listed* and *labeled* for use with wall *furnaces*.

Type L vent. A vent *listed* and *labeled* for use with *appliances* that are *listed* for use with Type L or Type B vents.

VENT CONNECTOR. See "Connector."

VENT PIPING.

Breather. *Piping* run from a pressure-regulating device to the outdoors, designed to provide a reference to *atmospheric pressure*. If the device incorporates an integral pressure *relief* mechanism, a breather vent can also serve as a *relief* vent.

Relief. *Piping* run from a pressure-regulating or pressure-limiting device to the outdoors, designed to provide for the safe venting of gas in the event of excessive pressure in the *gas piping system*.

VENTED APPLIANCE CATEGORIES. *Appliances* that are categorized for the purpose of vent selection are classified into the following four categories:

Category I. An *appliance* that operates with a nonpositive vent static pressure and with a vent gas temperature that avoids excessive *condensate* production in the vent.

Category II. An *appliance* that operates with a nonpositive *vent* static pressure and with a vent gas temperature that is capable of causing excessive *condensate* production in the vent.

Category III. An *appliance* that operates with a positive vent static pressure and with a vent gas temperature that avoids excessive *condensate* production in the vent.

Category IV. An *appliance* that operates with a positive vent static pressure and with a vent gas temperature that is capable of causing excessive *condensate* production in the vent.

VENTED ROOM HEATER. A vented self-contained, free-standing, nonrecessed *appliance* for furnishing warm air to the space in which it is installed, directly from the heater without duct connections.

VENTED WALL FURNACE. A self-contained vented *appliance* complete with grilles or equivalent, designed for incorporation in or permanent attachment to the structure of a building, mobile home or travel trailer, and furnishing heated air circulated by gravity or by a fan directly into the space to be heated through openings in the casing. This definition shall exclude *floor furnaces, unit heaters* and *central furnaces* as herein defined.

VENTING SYSTEM. A continuous open passageway from the *flue collar* or *draft hood* of an *appliance* to the outdoor atmosphere for the purpose of removing flue or vent gases. A venting system is usually composed of a vent or a chimney and *vent connector*, if used, assembled to form the open passageway.

WALL HEATER, UNVENTED TYPE. A room heater of the type designed for insertion in or attachment to a wall or partition. Such heater does not incorporate concealed venting arrangements in its construction and discharges all products of *combustion* through the front into the room being heated.

WATER HEATER. Any heating *appliance* or *equipment* that heats potable water and supplies such water to the potable hot water distribution system.

SECTION G2404 (301) GENERAL

G2404.1 (301.1) Scope. This section shall govern the approval and installation of all *equipment* and *appliances* that comprise parts of the installations regulated by this *code* in accordance with Section G2401.

G2404.2 (301.1.1) Other fuels. The requirements for *combustion* and *dilution air* for gas-fired *appliances* shall be governed by Section G2407. The requirements for *combustion* and *dilution air* for *appliances* operating with fuels other than fuel gas shall be regulated by Chapter 17.

G2404.3 (301.3) Listed and labeled. *Appliances* regulated by this *code* shall be *listed* and *labeled* for the application in which they are used unless otherwise *approved* in accordance with Section R104.11. The approval of unlisted *appliances* in accordance with Section R104.11 shall be based upon *approved* engineering evaluation.

G2404.4 (301.8) Vibration isolation. Where means for isolation of vibration of an *appliance* is installed, an *approved* means for support and restraint of that *appliance* shall be provided.

G2404.5 (301.9) Repair. Defective material or parts shall be replaced or repaired in such a manner so as to preserve the original approval or listing.

G2404.6 (301.10) Wind resistance. *Appliances* and supports that are exposed to wind shall be designed and installed to resist the wind pressures determined in accordance with this *code*.

G2404.7 (301.11) Flood hazard. For structures located in flood hazard areas, the appliance, equipment and system installations regulated by this code shall be located at or above the elevation required by Section R322 for utilities and attendant equipment.

> **Exception:** The appliance, equipment and system installations regulated by this code are permitted to be located below the elevation required by Section R322 for utilities and attendant equipment provided that they are designed and installed to prevent water from entering or accumulating within the components and to resist hydrostatic and hydrodynamic loads and stresses, including the effects of buoyancy, during the occurrence of flooding to such elevation.

G2404.8 (301.12) Seismic resistance. When earthquake loads are applicable in accordance with this code, the supports shall be designed and installed for the seismic forces in accordance with this code.

G2404.9 (301.14) Rodentproofing. Buildings or structures and the walls enclosing habitable or occupiable rooms and spaces in which persons live, sleep or work, or in which feed, food or foodstuffs are stored, prepared, processed, served or sold, shall be constructed to protect against the entry of rodents.

G2404.10 (307.5) Auxiliary drain pan. Category IV condensing *appliances* shall be provided with an auxiliary drain pan where damage to any building component will occur as a result of stoppage in the *condensate* drainage system. Such pan shall be installed in accordance with the applicable provisions of Section M1411.

> **Exception:** An auxiliary drain pan shall not be required for *appliances* that automatically shut down operation in the event of a stoppage in the *condensate* drainage system.

G2404.11 (307.6) Condensate pumps. Condensate pumps located in uninhabitable spaces, such as attics and crawl spaces, shall be connected to the *appliance* or *equipment* served such that when the pump fails, the *appliance* or *equipment* will be prevented from operating. Pumps shall be installed in accordance with the manufacturer's instructions.

SECTION G2405 (302) STRUCTURAL SAFETY

G2405.1 (302.1) Structural safety. The building shall not be weakened by the installation of any gas *piping*. In the process of installing or repairing any gas *piping*, the finished floors, walls, ceilings, tile work or any other part of the building or premises which is required to be changed or replaced shall be left in a safe structural condition in accordance with the requirements of this code.

G2405.2 (302.4) Alterations to trusses. Truss members and components shall not be cut, drilled, notched, spliced or otherwise altered in any way without the written concurrence and approval of a registered design professional. *Alterations* resulting in the addition of loads to any member, such as HVAC equipment and water heaters, shall not be permitted without verification that the truss is capable of supporting such additional loading.

G2405.3 (302.3.1) Engineered wood products. Cuts, notches and holes bored in trusses, structural composite lumber, structural glued-laminated members and I-joists are prohibited except where permitted by the manufacturer's recommendations or where the effects of such *alterations* are specifically considered in the design of the member by a registered design professional.

SECTION G2406 (303) APPLIANCE LOCATION

G2406.1 (303.1) General. *Appliances* shall be located as required by this section, specific requirements elsewhere in this code and the conditions of the *equipment* and *appliance* listing.

G2406.2 (303.3) Prohibited locations. *Appliances* shall not be located in sleeping rooms, bathrooms, toilet rooms, storage closets or surgical rooms, or in a space that opens only into such rooms or spaces, except where the installation complies with one of the following:

1. The *appliance* is a direct-vent *appliance* installed in accordance with the conditions of the listing and the manufacturer's instructions.
2. *Vented room heaters*, wall *furnaces*, vented decorative *appliances*, vented gas *fireplaces*, vented gas *fireplace* heaters and decorative *appliances* for installation in vented solid fuel-burning *fireplaces* are installed in rooms that meet the required volume criteria of Section G2407.5.
3. A single wall-mounted *unvented room heater* is installed in a bathroom and such *unvented room heater* is equipped as specified in Section G2445.6 and has an input rating not greater than 6,000 *Btu*/h (1.76 kW). The bathroom shall meet the required volume criteria of Section G2407.5.

4. A single wall-mounted *unvented room heater* is installed in a bedroom and such *unvented room heater* is equipped as specified in Section G2445.6 and has an input rating not greater than 10,000 *Btu*/h (2.93 kW). The bedroom shall meet the required volume criteria of Section G2407.5.
5. The *appliance* is installed in a room or space that opens only into a bedroom or bathroom, and such room or space is used for no other purpose and is provided with a solid weather-stripped door equipped with an *approved* self-closing device. All *combustion air* shall be taken directly from the outdoors in accordance with Section G2407.6.

G2406.3 (303.6) Outdoor locations. *Appliances* installed in outdoor locations shall be either listed for outdoor installation or provided with protection from outdoor environmental factors that influence the operability, durability and safety of the *appliance*.

SECTION G2407 (304) COMBUSTION, VENTILATION AND DILUTION AIR

G2407.1 (304.1) General. Air for *combustion*, ventilation and dilution of *flue gases* for *appliances* installed in buildings shall be provided by application of one of the methods prescribed in Sections G2407.5 through G2407.9. Where the requirements of Section G2407.5 are not met, outdoor air shall be introduced in accordance with one of the methods prescribed in Sections G2407.6 through G2407.9. *Direct-vent appliances*, gas *appliances* of other than *natural draft* design, vented gas *appliances* not designated as Category I and *appliances* equipped with power burners, shall be provided with *combustion*, ventilation and *dilution air* in accordance with the *appliance* manufacturer's instructions.

Exception: *Type 1 clothes dryers* that are provided with *makeup air* in accordance with Section G2439.5.

G2407.2 (304.2) Appliance location. *Appliances* shall be located so as not to interfere with proper circulation of *combustion*, ventilation and *dilution air*.

G2407.3 (304.3) Draft hood/regulator location. Where used, a *draft hood* or a *barometric draft regulator* shall be installed in the same room or enclosure as the *appliance* served to prevent any difference in pressure between the hood or regulator and the *combustion air* supply.

G2407.4 (304.4) Makeup air provisions. Where exhaust fans, *clothes dryers* and kitchen ventilation systems interfere with the operation of *appliances, makeup air* shall be provided.

G2407.5 (304.5) Indoor combustion air. The required volume of indoor air shall be determined in accordance with Section G2407.5.1 or G2407.5.2, except that where the air infiltration rate is known to be less than 0.40 air changes per hour (ACH), Section G2407.5.2 shall be used. The total required volume shall be the sum of the required volume calculated for all *appliances* located within the space. Rooms communicating directly with the space in which the *appliances* are installed through openings not furnished with doors, and through *combustion air* openings sized and located in accordance with Section G2407.5.3, are considered to be part of the required volume.

G2407.5.1 (304.5.1) Standard method. The minimum required volume shall be 50 cubic feet per 1,000 *Btu*/h (4.8 m^3/kW) of the appliance input rating.

G2407.5.2 (304.5.2) Known air-infiltration-rate method. Where the air infiltration rate of a structure is known, the minimum required volume shall be determined as follows:

For *appliances* other than fan-assisted, calculate volume using Equation 24-1.

$$Required\ Volume_{other} \geq \frac{21\text{ft}^3}{ACH}\left(\frac{I_{other}}{1{,}000\ \text{Btu/h}}\right)$$

(Equation 24-1)

For fan-assisted *appliances*, calculate volume using Equation 24-2.

$$Required\ Volume_{fan} \geq \frac{15\text{ft}^3}{ACH}\left(\frac{I_{fan}}{1{,}000\ \text{Btu/hr}}\right)$$

(Equation 24-2

where:

I_{other} = All *appliances* other than fan assisted (input in *Btu*/h).

I_{fan} = Fan-assisted *appliance* (input in *Btu*/h).

ACH = Air change per hour (percent of volume of space exchanged per hour, expressed as a decimal).

For purposes of this calculation, an infiltration rate greater than 0.60 *ACH* shall not be used in Equations 24-1 and 24-2.

G2407.5.3 (304.5.3) Indoor opening size and location. Openings used to connect indoor spaces shall be sized and located in accordance with Sections G2407.5.3.1 and G2407.5.3.2 (see Figure G2407.5.3).

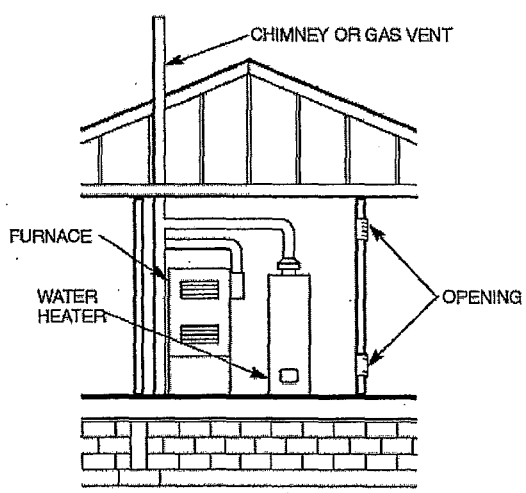

FIGURE G2407.5.3 (304.5.3)
ALL AIR FROM INSIDE THE BUILDING
(see Section G2407.5.3)

G2407.5.3.1 (304.5.3.1) Combining spaces on the same story. Each opening shall have a minimum free area of 1 square inch per 1,000 *Btu*/h (2,200 mm²/kW) of the total input rating of all *appliances* in the space, but not less than 100 square inches (0.06 m²). One opening shall commence within 12 inches (305 mm) of the top and one opening shall commence within 12 inches (305 mm) of the bottom of the enclosure. The minimum dimension of air openings shall be not less than 3 inches (76 mm).

G2407.5.3.2 (304.5.3.2) Combining spaces in different stories. The volumes of spaces in different stories shall be considered as communicating spaces where such spaces are connected by one or more openings in doors or floors having a total minimum free area of 2 square inches per 1,000 *Btu*/h (4402 mm²/kW) of total input rating of all *appliances*.

G2407.6 (304.6) Outdoor combustion air. Outdoor *combustion* air shall be provided through opening(s) to the outdoors in accordance with Section G2407.6.1 or G2407.6.2. The minimum dimension of air openings shall be not less than 3 inches (76 mm).

G2407.6.1 (304.6.1) Two-permanent-openings method. Two permanent openings, one commencing within 12 inches (305 mm) of the top and one commencing within 12 inches (305 mm) of the bottom of the enclosure, shall be provided. The openings shall communicate directly or by ducts with the outdoors or spaces that freely communicate with the outdoors.

Where directly communicating with the outdoors, or where communicating with the outdoors through vertical ducts, each opening shall have a minimum free area of 1 square inch per 4,000 *Btu*/h (550 mm²/kW) of total input rating of all *appliances* in the enclosure [see Figures G2407.6.1(1) and G2407.6.1(2)].

Where communicating with the outdoors through horizontal ducts, each opening shall have a minimum free area of not less than 1 square inch per 2,000 *Btu*/h (1,100 mm²/kW) of total input rating of all *appliances* in the enclosure [see Figure G2407.6.1(3)].

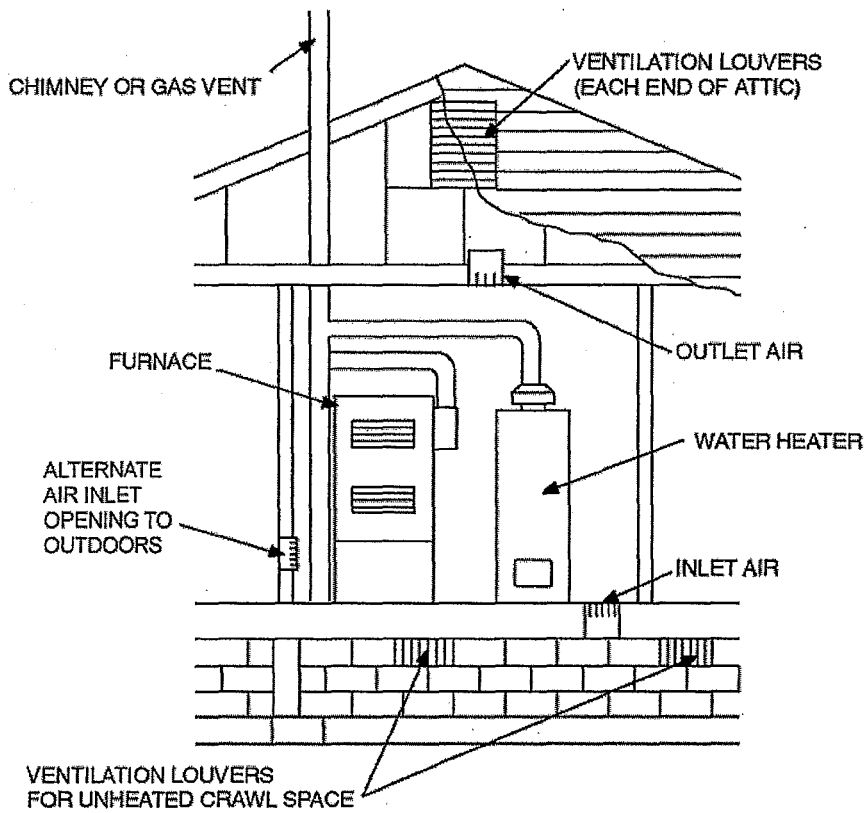

FIGURE G2407.6.1(1) [304.6.1(1)]
ALL AIR FROM OUTDOORS—INLET AIR FROM VENTILATED CRAWL SPACE AND OUTLET AIR TO VENTILATED ATTIC
(see Section G2407.6.1)

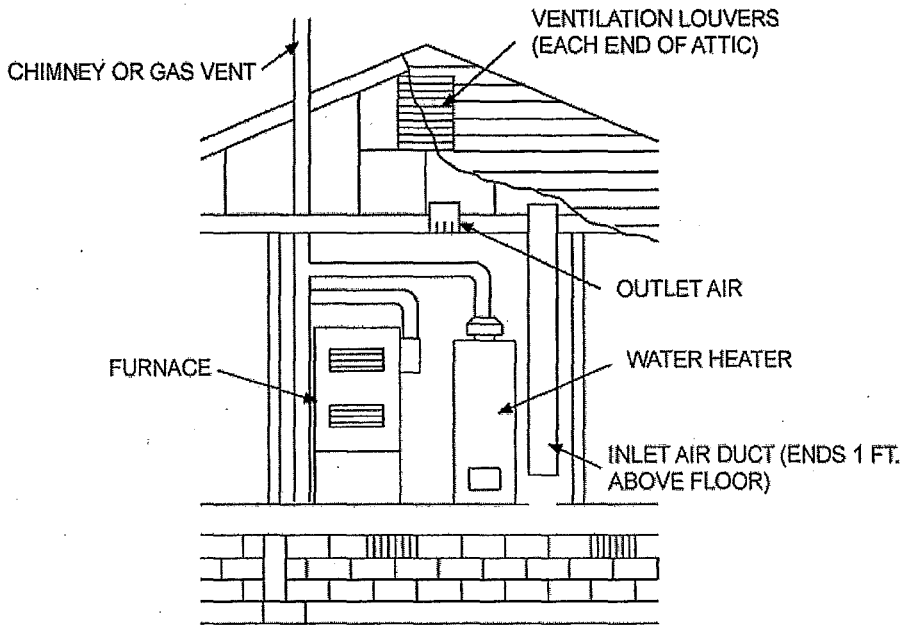

For SI: 1 foot = 304.8 mm.

FIGURE G2407.6.1(2) [304.6.1(2)]
ALL AIR FROM OUTDOORS THROUGH VENTILATED ATTIC (see Section G2407.6.1)

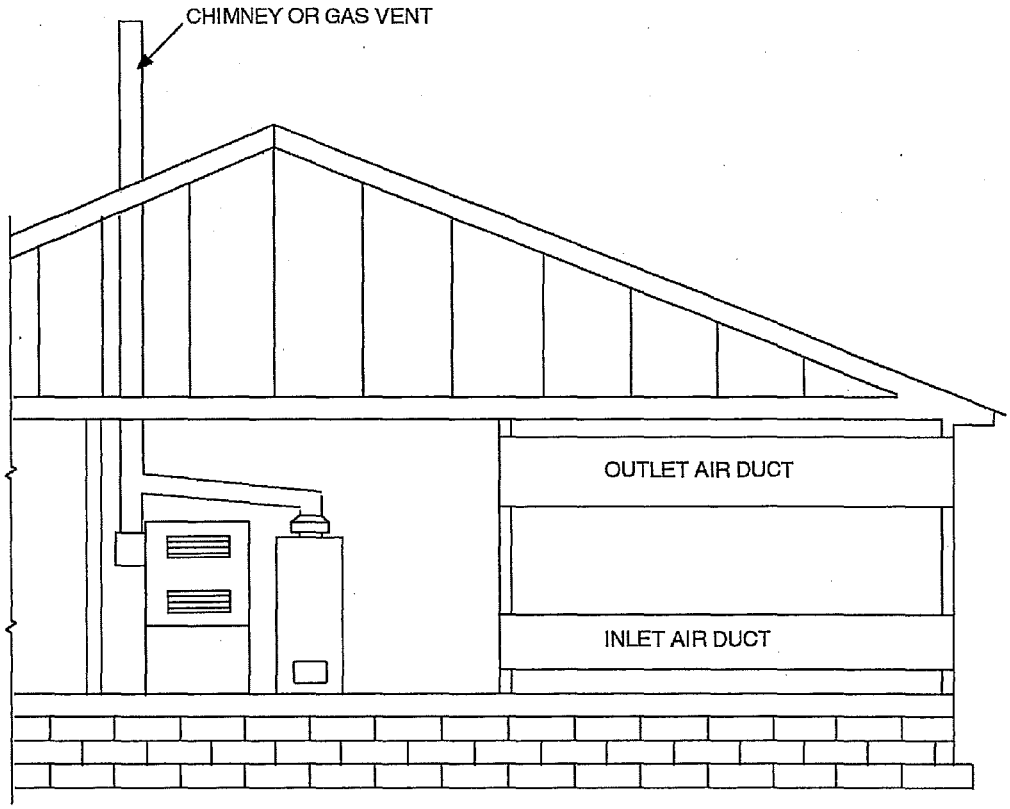

FIGURE G2407.6.1(3) [304.6.1(3)]
ALL AIR FROM OUTDOORS (see Section G2407.6.1)

2989

G2407.6.2 (304.6.2) One-permanent-opening method. One permanent opening, commencing within 12 inches (305 mm) of the top of the enclosure, shall be provided. The *appliance* shall have *clearances* of at least 1 inch (25 mm) from the sides and back and 6 inches (152 mm) from the front of the *appliance*. The opening shall directly communicate with the outdoors or through a vertical or horizontal duct to the outdoors, or spaces that freely communicate with the outdoors (see Figure G2407.6.2) and shall have a minimum free area of 1 square inch per 3,000 *Btu*/h (734 mm^2/kW) of the total input rating of all *appliances* located in the enclosure and not less than the sum of the areas of all *vent connectors* in the space.

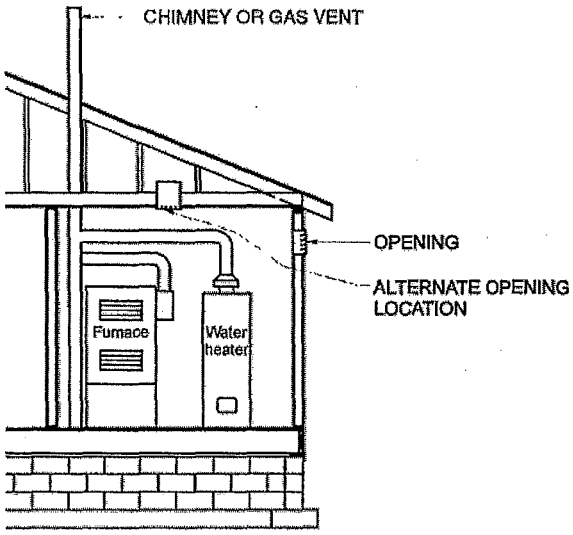

FIGURE G2407.6.2 (304.6.2)
SINGLE COMBUSTION AIR OPENING, ALL AIR FROM OUTDOORS
(see Section G2407.6.2)

G2407.7 (304.7) Combination indoor and outdoor combustion air. The use of a combination of indoor and outdoor *combustion air* shall be in accordance with Sections G2407.7.1 through G2407.7.3.

G2407.7.1 (304.7.1) Indoor openings. Where used, openings connecting the interior spaces shall comply with Section G2407.5.3.

G2407.7.2 (304.7.2) Outdoor opening location. Outdoor opening(s) shall be located in accordance with Section G2407.6.

G2407.7.3 (304.7.3) Outdoor opening(s) size. The outdoor opening(s) size shall be calculated in accordance with the following:

1. The ratio of interior spaces shall be the available volume of all communicating spaces divided by the required volume.
2. The outdoor size reduction factor shall be one minus the ratio of interior spaces.
3. The minimum size of outdoor opening(s) shall be the full size of outdoor opening(s) calculated in accordance with Section G2407.6, multiplied by the reduction factor. The minimum dimension of air openings shall be not less than 3 inches (76 mm).

G2407.8 (304.8) Engineered installations. Engineered *combustion air* installations shall provide an adequate supply of *combustion*, ventilation and *dilution air* and shall be *approved*.

G2407.9 (304.9) Mechanical combustion air supply. Where all *combustion air* is provided by a mechanical air supply system, the *combustion air* shall be supplied from the outdoors at a rate not less than 0.35 cubic feet per minute per 1,000 *Btu*/h (0.034 m^3/min per kW) of total input rating of all *appliances* located within the space.

G2407.9.1 (304.9.1) Makeup air. Where exhaust fans are installed, *makeup air* shall be provided to replace the exhausted air.

G2407.9.2 (304.9.2) Appliance interlock. Each of the *appliances* served shall be interlocked with the mechanical air supply system to prevent *main burner* operation when the mechanical air supply system is not in operation.

G2407.9.3 (304.9.3) Combined combustion air and ventilation air system. Where *combustion air* is provided by the building's mechanical ventilation system, the system shall provide the specified *combustion air* rate in addition to the required ventilation air.

G2407.10 (304.10) Louvers and grilles. The required size of openings for *combustion*, ventilation and *dilution air* shall be based on the net free area of each opening. Where the free area through a design of louver, grille or screen is known, it shall be used in calculating the size opening required to provide the free area specified. Where the design and free area of louvers and grilles are not known, it shall be assumed that wood louvers will have 25-percent free area and metal louvers and grilles will have 75-percent free area. Screens shall have a mesh size not smaller than $^1/_4$ inch (6.4 mm). Nonmotorized louvers and grilles shall be fixed in the open position. Motorized louvers shall be interlocked with the *appliance* so that they are proven to be in the full open position prior to *main burner* ignition and during *main burner* operation. Means shall be provided to prevent the *main burner* from igniting if the louvers fail to open during *burner* start-up and to shut down the *main burner* if the louvers close during operation.

G2407.11 (304.11) Combustion air ducts. *Combustion air* ducts shall comply with all of the following:

1. Ducts shall be constructed of galvanized steel complying with Chapter 16 or of a material having equivalent corrosion resistance, strength and rigidity.

   Exception: Within dwellings units, unobstructed stud and joist spaces shall not be prohibited from conveying *combustion air*, provided that not more than one required fireblock is removed.

2. Ducts shall terminate in an unobstructed space allowing free movement of *combustion air* to the *appliances*.
3. Ducts shall serve a single enclosure.

4. Ducts shall not serve both upper and lower *combustion air* openings where both such openings are used. The separation between ducts serving upper and lower *combustion air* openings shall be maintained to the source of *combustion air*.
5. Ducts shall not be screened where terminating in an attic space.
6. Horizontal upper *combustion air* ducts shall not slope downward toward the source of *combustion air*.
7. The remaining space surrounding a *chimney* liner, gas vent, special gas vent or plastic *piping* installed within a masonry, metal or factory-built *chimney* shall not be used to supply *combustion air*.

   Exception: Direct-vent gas-fired *appliances* designed for installation in a solid fuel-burning *fireplace* where installed in accordance with the manufacturer's instructions.
8. *Combustion air* intake openings located on the exterior of a building shall have the lowest side of such openings located not less than 12 inches (305 mm) vertically from the adjoining finished ground level.

G2407.12 (304.12) Protection from fumes and gases. Where corrosive or flammable process fumes or gases, other than products of *combustion*, are present, means for the disposal of such fumes or gases shall be provided. Such fumes or gases include carbon monoxide, hydrogen sulfide, ammonia, chlorine and halogenated hydrocarbons.

In barbershops, beauty shops and other facilities where chemicals that generate corrosive or flammable products, such as aerosol sprays, are routinely used, nondirect vent-type *appliances* shall be located in a mechanical room separated or partitioned off from other areas with provisions for *combustion air* and *dilution air* from the outdoors. *Direct-vent appliances* shall be installed in accordance with the *appliance* manufacturer's instructions.

SECTION G2408 (305) INSTALLATION

G2408.1 (305.1) General. *Equipment* and *appliances* shall be installed as required by the terms of their approval, in accordance with the conditions of listing, the manufacturer's instructions and this code. Manufacturer's installation instructions shall be available on the job site at the time of inspection. Where a code provision is less restrictive than the conditions of the listing of the *equipment* or *appliance* or the manufacturer's installation instructions, the conditions of the listing and the manufacturer's installation instructions shall apply.

Unlisted *appliances approved* in accordance with Section G2404.3 shall be limited to uses recommended by the manufacturer and shall be installed in accordance with the manufacturer's instructions, the provisions of this code and the requirements determined by the *code official*.

G2408.2 (305.3) Elevation of ignition source. *Equipment* and *appliances* having an *ignition source* shall be elevated such that the source of ignition is not less than 18 inches (457 mm) above the floor in *hazardous locations* and public garages, private garages, repair garages, motor fuel-dispensing facilities and parking garages. For the purpose of this section, rooms or spaces that are not part of the *living space* of a *dwelling unit* and that communicate directly with a private garage through openings shall be considered to be part of the private garage.

Exception: Elevation of the *ignition source* is not required for *appliances* that are *listed* as flammable-vapor-ignition resistant.

G2408.2.1 (305.3.1) Installation in residential garages. In residential garages where *appliances* are installed in a separate, enclosed space having access only from outside of the garage, such *appliances* shall be permitted to be installed at floor level, provided that the required *combustion air* is taken from the exterior of the garage.

G2408.3 (305.5) Private garages. *Appliances* located in private garages shall be installed with a minimum *clearance* of 6 feet (1829 mm) above the floor.

Exception: The requirements of this section shall not apply where the *appliances* are protected from motor vehicle impact and installed in accordance with Section G2408.2.

G2408.4 (305.7) Clearances from grade. *Equipment* and *appliances* installed at grade level shall be supported on a level concrete slab or other *approved* material extending not less than 3 inches (76 mm) above adjoining grade or shall be suspended not less than 6 inches (152 mm) above adjoining grade. Such supports shall be installed in accordance with the manufacturer's instructions.

G2408.5 (305.8) Clearances to combustible construction. Heat-producing *equipment* and *appliances* shall be installed to maintain the required clearances to combustible construction as specified in the listing and manufacturer's instructions. Such *clearances* shall be reduced only in accordance with Section G2409. *Clearances* to combustibles shall include such considerations as door swing, drawer pull, overhead projections or shelving and window swing. Devices, such as door stops or limits and closers, shall not be used to provide the required *clearances*.

G2408.6 (305.12) Avoid strain on gas piping. *Appliances* shall be supported and connected to the *piping* so as not to exert undue strain on the connections.

SECTION G2409 (308) CLEARANCE REDUCTION

G2409.1 (308.1) Scope. This section shall govern the reduction in required clearances to *combustible materials*, including gypsum board, and *combustible assemblies* for chimneys, vents, appliances, devices and equipment. Clearance requirements for air-conditioning equipment and central heating boilers and furnaces shall comply with Sections G2409.3 and G2409.4.

G2409.2 (308.2) Reduction table. The allowable *clearance* reduction shall be based on one of the methods specified in Table G2409.2 or shall utilize a reduced *clearance* protective

assembly *listed* and *labeled* in accordance with UL 1618. Where required *clearances* are not listed in Table G2409.2, the reduced clearances shall be determined by linear interpolation between the distances listed in the table. Reduced *clearances* shall not be derived by extrapolation below the range of the table. The reduction of the required *clearances* to combustibles for *listed* and *labeled appliances* and *equipment* shall be in accordance with the requirements of this section, except that such *clearances* shall not be reduced where reduction is specifically prohibited by the terms of the *appliance* or *equipment listing* [see Figures G2409.2(1) through 2409.2(3)].

G2409.3 (308.3) Clearances for indoor air-conditioning appliances. *Clearance* requirements for indoor air-conditioning *appliances* shall comply with Sections G2409.3.1 through G2409.3.4.

G2409.3.1 (308.3.1) Appliances clearances. Air-conditioning *appliances* shall be installed with clearances in accordance with the manufacturer's instructions.

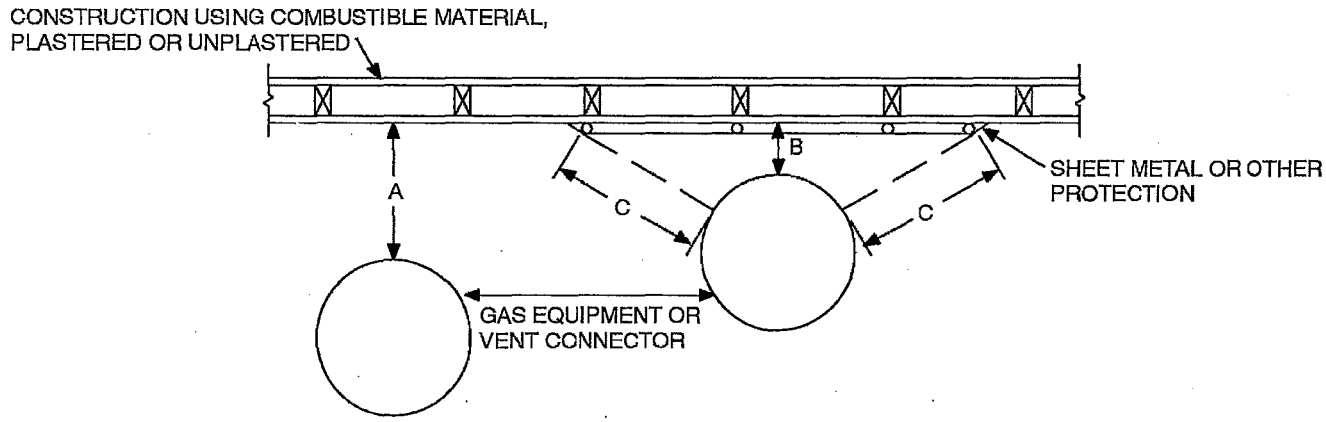

NOTES:
"A" equals the *clearance* without protection.
"B" equals the reduced *clearance* permitted in accordance with Table G2409.2. The protection applied to the construction using *combustible material* shall extend far enough in each direction to make "C" equal to "A."

FIGURE G2409.2(1) [308.2(1)]
EXTENT OF PROTECTION NECESSARY TO REDUCE CLEARANCES FROM GAS EQUIPMENT OR VENT CONNECTORS

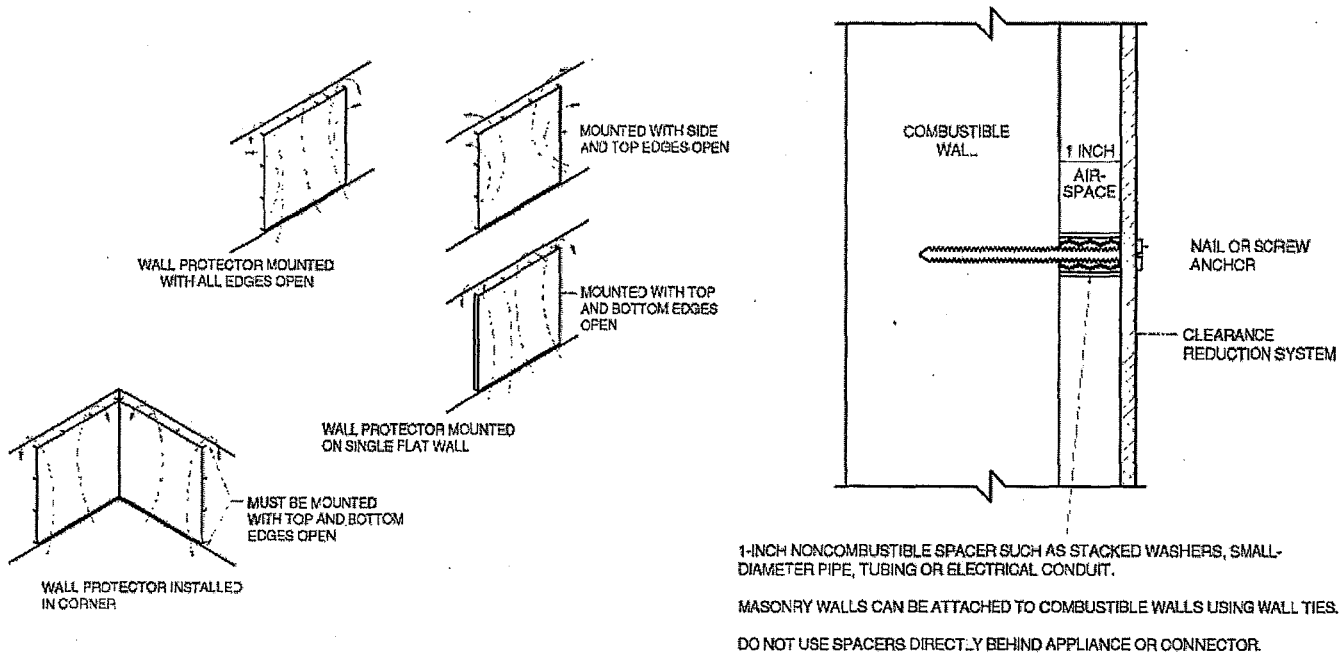

For SI: 1 inch = 25.4 mm.

FIGURE G2409.2(2) [308.2(2)]
WALL PROTECTOR CLEARANCE REDUCTION SYSTEM

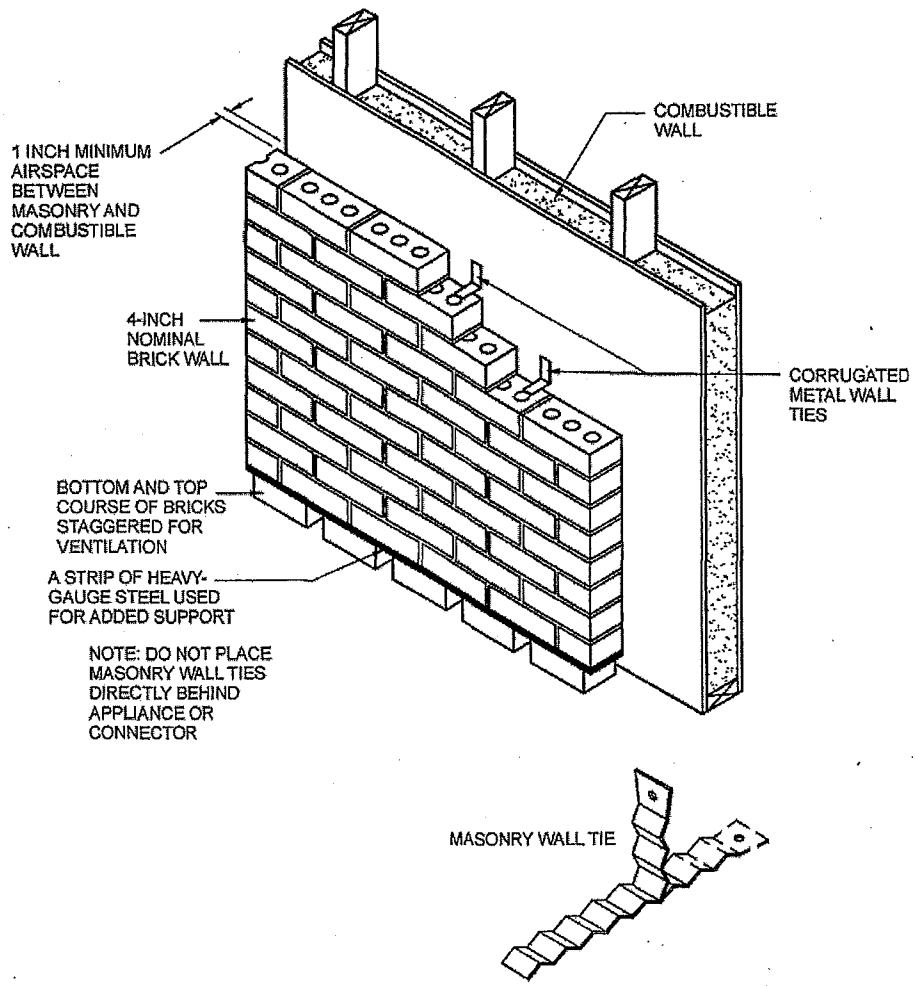

For SI: 1 inch = 25.4 mm.

FIGURE G2409.2(3) [308.2(3)]
MASONRY CLEARANCE REDUCTION SYSTEM

G2409.3.2 (308.3.2) Clearance reduction. Air-conditioning appliances shall be permitted to be installed with reduced clearances to *combustible material*, provided that the *combustible material* or *appliance* is protected as described in Table G2409.2 and such reduction is allowed by the manufacturer's instructions.

G2409.3.3 (308.3.3) Plenum clearances. Where the *furnace plenum* is adjacent to plaster on metal lath or *noncombustible material* attached to *combustible material*, the *clearance* shall be measured to the surface of the plaster or other noncombustible finish where the *clearance* specified is 2 inches (51 mm) or less.

G2409.3.4 (308.3.4) Clearance from supply ducts. Supply air ducts connecting to listed central heating furnaces shall have the same minimum clearance to combustibles as required for the furnace supply plenum for a distance of not less than 3 feet (914 mm) from the supply plenum. Clearance is not required beyond the 3-foot (914 mm) distance.

G2409.4 (308.4) Central heating boilers and furnaces. *Clearance* requirements for central-heating boilers and *furnaces* shall comply with Sections G2409.4.1 through G2409.4.5. The *clearance* to these *appliances* shall not interfere with *combustion air*; *draft hood clearance* and relief; and accessibility for servicing.

G2409.4.1 (308.4.1) Appliances clearances. Central-heating furnaces and low-pressure boilers shall be installed with clearances in accordance with the manufacturer's instructions.

G2409.4.2 (308.4.2) Clearance reduction. Central-heating furnaces and low-pressure boilers shall be permitted to be installed with reduced clearances to *combustible material* provided that the *combustible material* or *appliance* is protected as described in Table G2409.2 and such reduction is allowed by the manufacturer's instructions.

G2409.4.3 (308.4.4) Plenum clearances. Where the *furnace plenum* is adjacent to plaster on metal lath or *noncombustible* material attached to *combustible material*, the *clearance* shall be measured to the surface of the plaster or other noncombustible finish where the *clearance* specified is 2 inches (51 mm) or less.

TABLE G2409.2 (308.2)[a through k]
REDUCTION OF CLEARANCES WITH SPECIFIED FORMS OF PROTECTION

TYPE OF PROTECTION APPLIED TO AND COVERING ALL SURFACES OF COMBUSTIBLE MATERIAL WITHIN THE DISTANCE SPECIFIED AS THE REQUIRED CLEARANCE WITH NO PROTECTION [see Figures G2409.2(1), G2409.2(2), and G2409.2(3)]	WHERE THE REQUIRED CLEARANCE WITH NO PROTECTION FROM APPLIANCE, VENT CONNECTOR, OR SINGLE-WALL METAL PIPE IS: (inches)									
	36		18		12		9		6	
	Allowable clearances with specified protection (inches)									
	Use Column 1 for clearances above appliance or horizontal connector. Use Column 2 for clearances from appliance, vertical connector and single-wall metal pipe.									
	Above Col. 1	Sides and rear Col. 2	Above Col. 1	Sides and rear Col. 2	Above Col. 1	Sides and rear Col. 2	Above Col. 1	Sides and rear Col. 2	Above Col. 1	Sides and rear Col. 2
1. $3^1/_2$-inch-thick masonry wall without ventilated airspace	—	24	—	12	—	9	—	6	—	5
2. $^1/_2$-inch insulation board over 1-inch glass fiber or mineral wool batts	24	18	12	9	9	6	6	5	4	3
3. 0.024-inch (nominal 24 gage) sheet metal over 1-inch glass fiber or mineral wool batts reinforced with wire on rear face with ventilated airspace	18	12	9	6	6	4	5	3	3	3
4. $3^1/_2$-inch-thick masonry wall with ventilated airspace	—	12	—	6	—	6	—	6	—	6
5. 0.024-inch (nominal 24 gage) sheet metal with ventilated airspace	18	12	9	6	6	4	5	3	3	2
6. $^1/_2$-inch-thick insulation board with ventilated airspace	18	12	9	6	6	4	5	3	3	3
7. 0.024-inch (nominal 24 gage) sheet metal with ventilated airspace over 0.024-inch (nominal 24 gage) sheet metal with ventilated airspace	18	12	9	6	6	4	5	3	3	3
8. 1-inch glass fiber or mineral wool batts sandwiched between two sheets 0.024-inch (nominal 24 gage) sheet metal with ventilated airspace	18	12	9	6	6	4	5	3	3	3

For SI: 1 inch = 25.4 mm, °C = [(°F - 32)/1.8], 1 pound per cubic foot = 16.02 kg/m^3, 1 Btu per inch per square foot per hour per °F = 0.144 W/m^2 · K.

a. Reduction of *clearances* from *combustible materials* shall not interfere with combustion air, draft hood *clearance* and relief, and accessibility of servicing.

b. All *clearances* shall be measured from the outer surface of the *combustible material* to the nearest point on the surface of the *appliance*, disregarding any intervening protection applied to the *combustible material*.

c. Spacers and ties shall be of *noncombustible material*. A spacer or tie shall not be used directly opposite an *appliance* or *connector*.

d. For all clearance reduction systems using a ventilated airspace, adequate provision for air circulation shall be provided as described [see Figures G2409.2(2) and G2409.2(3)].

e. There shall be at least 1 inch between *clearance* reduction systems and combustible walls and ceilings for reduction systems using ventilated airspace.

f. Where a wall protector is mounted on a single flat wall away from corners, it shall have an air gap of not less than 1 inch. To provide air circulation, the bottom and top edges, or only the side and top edges, or all edges shall be left open.

g. Mineral wool batts (blanket or board) shall have a density of not less than 8 pounds per cubic foot and a melting point of not less than 1500°F.

h. Insulation material used as part of a *clearance* reduction system shall have a thermal conductivity of 1.0 Btu per inch per square foot per hour per °F or less.

i. There shall be not less than 1 inch between the *appliance* and the protector. The *clearance* between the *appliance* and the combustible surface shall not be reduced below that allowed in this table.

j. All *clearances* and thicknesses are minimum; larger *clearances* and thicknesses are acceptable.

k. *Listed* single-wall connectors shall be installed in accordance with the manufacturer's instructions.

G2409.4.4 (308.4.5) Clearance from supply ducts. Supply air ducts connecting to listed central heating furnaces shall have the same minimum clearance to combustibles as required for the furnace supply plenum for a distance of not less than 3 feet (914 mm) from the supply plenum. Clearance is not required beyond the 3-foot (914 mm) distance.

G2409.4.5 (308.4.3) Clearance for servicing appliances. Front *clearance* shall be sufficient for servicing the *burner* and the *furnace* or boiler.

SECTION G2410 (309) ELECTRICAL

G2410.1 (309.1) Grounding. *Gas piping* shall not be used as a grounding electrode.

G2410.2 (309.2) Connections. Electrical connections between *appliances* and the building wiring, including the grounding of the *appliances*, shall conform to Chapters 34 through 43.

SECTION G2411 (310) ELECTRICAL BONDING

G2411.1 (310.1) Pipe and tubing other than CSST. Each above-ground portion of a *gas piping system* other than corrugated stainless steel tubing (CSST) that is likely to become energized shall be electrically continuous and bonded to an effective ground-fault current path. *Gas piping* other than CSST shall be considered to be bonded where it is connected to *appliances* that are connected to the *equipment* grounding conductor of the circuit supplying that *appliance*.

G2411.1.1 (310.1.1) CSST. Corrugated stainless steel tubing (CSST) gas *piping* systems and piping systems containing one or more segments of CSST shall be bonded to the electrical service grounding electrode system or, where provided, the lightning protection electrode system.

G2411.1.1.1 (310.1.1.1) Point of connection. The bonding jumper shall connect to a metallic pipe, pipe fitting or CSST fitting.

G2411.1.1.2 (310.1.1.2) Size and material of jumper. The bonding jumper shall be not smaller than 6 AWG copper wire of equivalent.

G2411.1.1.3 (310.1.1.3) Bonding jumper length. The length of the bonding jumper between the connection to a gas piping system and the connection to a grounding electrode system shall not exceed 75 feet (22 860 mm). Any additional grounding electrodes used shall be bonded to the electrical service grounding electrode system or, where provided, the lightning protection grounding electrode system.

G2411.1.1.4 (310.1.1.4) Bonding connections. Bonding connections shall be in accordance with NFPA 70.

G2411.1.1.5 (310.1.1.5) Connection devices. Devices used for making the bonding connections shall be *listed* for the application in accordance with UL 467.

SECTION G2412 (401) GENERAL

G2412.1 (401.1) Scope. This section shall govern the design, installation, modification and maintenance of *piping systems*. The applicability of this *code* to *piping systems* extends from the *point of delivery* to the connections with the *appliances* and includes the design, materials, components, fabrication, assembly, installation, testing, inspection, operation and maintenance of such *piping systems*.

G2412.1.1 (401.1.1) Utility piping systems located within buildings. Utility service *piping* located within buildings shall be installed in accordance with the structural safety and fire protection provisions of this code.

G2412.2 (401.2) Liquefied petroleum gas storage. The storage system for *liquefied petroleum gas* shall be designed and installed in accordance with the *International Fire Code* and NFPA 58.

G2412.3 (401.3) Modifications to existing systems. In modifying or adding to existing *piping systems*, sizes shall be maintained in accordance with this chapter.

G2412.4 (401.4) Additional appliances. Where an additional *appliance* is to be served, the existing *piping* shall be checked to determine if it has adequate capacity for all *appliances* served. If inadequate, the existing system shall be enlarged as required or separate *piping* of adequate capacity shall be provided.

G2412.5 (401.5) Identification. For other than steel *pipe*, exposed *piping* shall be identified by a yellow label marked "Gas" in black letters. The marking shall be spaced at intervals not exceeding 5 feet (1524 mm). The marking shall not be required on *pipe* located in the same room as the *appliance* served.

G2412.6 (401.6) Interconnections. Where two or more *meters* are installed on the same premises but supply separate consumers, the *piping systems* shall not be interconnected on the outlet side of the *meters*.

G2412.7 (401.7) Piping meter identification. *Piping* from multiple *meter* installations shall be marked with an *approved* permanent identification by the installer so that the *piping system* supplied by each *meter* is readily identifiable.

G2412.8 (401.8) Minimum sizes. All *pipe* utilized for the installation, extension and *alteration* of any *piping system* shall be sized to supply the full number of outlets for the intended purpose and shall be sized in accordance with Section G2413.

G2412.9 (401.9) Identification. Each length of pipe and tubing and each pipe fitting, utilized in a fuel gas system, shall bear the identification of the manufacturer.

G2412.10 (401.10) Third-party testing and certification. Piping, tubing and fittings shall comply with the applicable referenced standards, specifications and performance criteria of this code and shall be identified in accordance with Section G2412.9. Piping, tubing and fittings shall either be tested by an approved third-party testing agency or certified by an approved *third-party certification agency*.

SECTION G2413 (402)
PIPE SIZING

G2413.1 (402.1) General considerations. *Piping systems* shall be of such size and so installed as to provide a supply of gas sufficient to meet the maximum *demand* and supply gas to each *appliance* inlet at not less than the minimum supply pressure required by the *appliance*.

G2413.2 (402.2) Maximum gas demand. The volumetric flow rate of gas to be provided shall be the sum of the maximum input of the *appliances* served.

The total connected hourly load shall be used as the basis for pipe sizing, assuming that all appliances could be operating at full capacity simultaneously. Where a diversity of load can be established, pipe sizing shall be permitted to be based on such loads.

The volumetric flow rate of gas to be provided shall be adjusted for altitude where the installation is above 2,000 feet (610 m) in elevation.

G2413.3 (402.3) Sizing. *Gas piping* shall be sized in accordance with one of the following:

1. *Pipe* sizing tables or sizing equations in accordance with Section G2413.4.
2. The sizing tables included in a *listed piping* system's manufacturer's installation instructions.
3. Other *approved* engineering methods.

G2413.4 (402.4) Sizing tables and equations. Where Tables G2413.4(1) through G2413.4(21) are used to size *piping* or *tubing*, the *pipe* length shall be determined in accordance with Section G2413.4.1, G2413.4.2 or G2413.4.3.

Where Equations 24-3 and 24-4 are used to size *piping* or *tubing*, the *pipe* or *tubing* shall have smooth inside walls and the pipe length shall be determined in accordance with Section G2413.4.1, G2413.4.2 or G2413.4.3.

1. Low-pressure gas equation [Less than $1^1/_2$ pounds per square inch (psi) (10.3 kPa)]:

$$D = \frac{Q^{0.381}}{19.17\left(\frac{\Delta H}{C_r \times L}\right)^{0.206}} \qquad \textbf{(Equation 24-3)}$$

2. High-pressure gas equation [1.5 psi (10.3 kPa) and above]:

$$D = \frac{Q^{0.381}}{18.93\left[\frac{(P_1^2 - P_2^2) \times Y}{C_r \times L}\right]^{0.206}} \qquad \textbf{(Equation 24-4)}$$

where:

D = Inside diameter of *pipe*, inches (mm).

Q = Input rate *appliance(s)*, cubic feet per hour at 60°F (16°C) and 30-inch mercury column.

P_1 = Upstream pressure, psia (P_1 + 14.7).

P_2 = Downstream pressure, psia (P_2 + 14.7).

L = Equivalent length of *pipe*, feet.

ΔH = *Pressure drop*, inch water column (27.7 inch water column = 1 psi).

TABLE G2413.4 (402.4)
C_r AND Y VALUES FOR NATURAL GAS AND UNDILUTED PROPANE AT STANDARD CONDITIONS

GAS	EQUATION FACTORS	
	C_r	Y
Natural gas	0.6094	0.9992
Undiluted propane	1.2462	0.9910

For SI: 1 cubic foot = 0.028 m³, 1 foot = 305 mm,
1-inch water column = 0.249 kPa,
1 pound per square inch = 6.895 kPa,
1 British thermal unit per hour = 0.293 W.

G2413.4.1 (402.4.1) Longest length method. The *pipe* size of each section of *gas piping* shall be determined using the longest length of *piping* from the *point of delivery* to the most remote *outlet* and the load of the section.

G2413.4.2 (402.4.2) Branch length method. *Pipe* shall be sized as follows:

1. *Pipe* size of each section of the longest *pipe* run from the *point of delivery* to the most remote *outlet* shall be determined using the longest run of *piping* and the load of the section.
2. The *pipe* size of each section of branch *piping* not previously sized shall be determined using the length of *piping* from the *point of delivery* to the most remote *outlet* in each branch and the load of the section.

G2413.4.3 (402.4.3) Hybrid pressure. The *pipe* size for each section of higher pressure *gas piping* shall be determined using the longest length of *piping* from the *point of delivery* to the most remote line *pressure regulator*. The *pipe* size from the line *pressure regulator* to each *outlet* shall be determined using the length of *piping* from the *regulator* to the most remote outlet served by the *regulator*.

G2413.5 (402.5) Allowable pressure drop. The design pressure loss in any *piping system* under maximum probable flow conditions, from the *point of delivery* to the inlet connection of the *appliance*, shall be such that the supply pressure at the *appliance* is greater than or equal to the minimum pressure required by the *appliance*.

G2413.6 (402.6) Maximum design operating pressure. The maximum design operating pressure for *piping systems* located inside buildings shall not exceed 5 pounds per square inch gauge (psig) (34 kPa gauge) except where one or more of the following conditions are met:

1. The *piping system* is welded.
2. The *piping* is located in a ventilated chase or otherwise enclosed for protection against accidental gas accumulation.
3. The *piping* is a temporary installation for buildings under construction.

G2413.6.1 (402.6.1) Liquefied petroleum gas systems. LP-gas systems designed to operate below -5°F (-21°C) or with butane or a propane-butane mix shall be designed to either accommodate liquid LP-gas or prevent LP-gas vapor from condensing into a liquid.

TABLE G2413.4(1) [402.4(2)]
SCHEDULE 40 METALLIC PIPE

Gas	Natural
Inlet Pressure	Less than 2 psi
Pressure Drop	0.5 in. w.c.
Specific Gravity	0.60

	PIPE SIZE (inches)													
Nominal	1/2	3/4	1	1 1/4	1 1/2	2	2 1/2	3	4	5	6	8	10	12
Actual ID	**0.622**	**0.824**	**1.049**	**1.380**	**1.610**	**2.067**	**2.469**	**3.068**	**4.026**	**5.047**	**6.065**	**7.981**	**10.020**	**11.938**
Length (ft)	**Capacity in Cubic Feet of Gas per Hour**													
10	172	360	678	1,390	2,090	4,020	6,400	11,300	23,100	41,800	67,600	139,000	252,000	399,000
20	118	247	466	957	1,430	2,760	4,400	7,780	15,900	28,700	46,500	95,500	173,000	275,000
30	95	199	374	768	1,150	2,220	3,530	6,250	12,700	23,000	37,300	76,700	139,000	220,000
40	81	170	320	657	985	1,900	3,020	5,350	10,900	19,700	31,900	65,600	119,000	189,000
50	72	151	284	583	873	1,680	2,680	4,740	9,660	17,500	28,300	58,200	106,000	167,000
60	65	137	257	528	791	1,520	2,430	4,290	8,760	15,800	25,600	52,700	95,700	152,000
70	60	126	237	486	728	1,400	2,230	3,950	8,050	14,600	23,600	48,500	88,100	139,000
80	56	117	220	452	677	1,300	2,080	3,670	7,490	13,600	22,000	45,100	81,900	130,000
90	52	110	207	424	635	1,220	1,950	3,450	7,030	12,700	20,600	42,300	76,900	122,000
100	50	104	195	400	600	1,160	1,840	3,260	6,640	12,000	19,500	40,000	72,600	115,000
125	44	92	173	355	532	1,020	1,630	2,890	5,890	10,600	17,200	35,400	64,300	102,000
150	40	83	157	322	482	928	1,480	2,610	5,330	9,650	15,600	32,100	58,300	92,300
175	37	77	144	296	443	854	1,360	2,410	4,910	8,880	14,400	29,500	53,600	84,900
200	34	71	134	275	412	794	1,270	2,240	4,560	8,260	13,400	27,500	49,900	79,000
250	30	63	119	244	366	704	1,120	1,980	4,050	7,320	11,900	24,300	44,200	70,000
300	27	57	108	221	331	638	1,020	1,800	3,670	6,630	10,700	22,100	40,100	63,400
350	25	53	99	203	305	587	935	1,650	3,370	6,100	9,880	20,300	36,900	58,400
400	23	49	92	189	283	546	870	1,540	3,140	5,680	9,190	18,900	34,300	54,300
450	22	46	86	177	266	512	816	1,440	2,940	5,330	8,620	17,700	32,200	50,900
500	21	43	82	168	251	484	771	1,360	2,780	5,030	8,150	16,700	30,400	48,100
550	20	41	78	159	239	459	732	1,290	2,640	4,780	7,740	15,900	28,900	45,700
600	19	39	74	152	228	438	699	1,240	2,520	4,560	7,380	15,200	27,500	43,600
650	18	38	71	145	218	420	669	1,180	2,410	4,360	7,070	14,500	26,400	41,800
700	17	36	68	140	209	403	643	1,140	2,320	4,190	6,790	14,000	25,300	40,100
750	17	35	66	135	202	389	619	1,090	2,230	4,040	6,540	13,400	24,400	38,600
800	16	34	63	130	195	375	598	1,060	2,160	3,900	6,320	13,000	23,600	37,300
850	16	33	61	126	189	363	579	1,020	2,090	3,780	6,110	12,600	22,800	36,100
900	15	32	59	122	183	352	561	992	2,020	3,660	5,930	12,200	22,100	35,000
950	15	31	58	118	178	342	545	963	1,960	3,550	5,760	11,800	21,500	34,000
1,000	14	30	56	115	173	333	530	937	1,910	3,460	5,600	11,500	20,900	33,100
1,100	14	28	53	109	164	316	503	890	1,810	3,280	5,320	10,900	19,800	31,400
1,200	13	27	51	104	156	301	480	849	1,730	3,130	5,070	10,400	18,900	30,000
1,300	12	26	49	100	150	289	460	813	1,660	3,000	4,860	9,980	18,100	28,700
1,400	12	25	47	96	144	277	442	781	1,590	2,880	4,670	9,590	17,400	27,600
1,500	11	24	45	93	139	267	426	752	1,530	2,780	4,500	9,240	16,800	26,600
1,600	11	23	44	89	134	258	411	727	1,480	2,680	4,340	8,920	16,200	25,600
1,700	11	22	42	86	130	250	398	703	1,430	2,590	4,200	8,630	15,700	24,800
1,800	10	22	41	84	126	242	386	682	1,390	2,520	4,070	8,370	15,200	24,100
1,900	10	21	40	81	122	235	375	662	1,350	2,440	3,960	8,130	14,800	23,400
2,000	NA	20	39	79	119	229	364	644	1,310	2,380	3,850	7,910	14,400	22,700

For SI: 1 inch = 25.4 mm, 1 foot = 304.8 mm, 1 pound per square inch = 6.895 kPa, 1-inch water column = 0.2488 kPa, 1 British thermal unit per hour = 0.2931 W, 1 cubic foot per hour = 0.0283 m^3/h, 1 degree = 0.01745 rad.

Notes:

1. NA means a flow of less than 10 cfh.
2. All table entries have been rounded to three significant digits.

TABLE G2413.4(2) [402.4(5)]
SCHEDULE 40 METALLIC PIPE

Gas	Natural
Inlet Pressure	2.0 psi
Pressure Drop	1.0 psi
Specific Gravity	0.60

	PIPE SIZE (inches)								
Nominal	1/2	3/4	1	1 1/4	1 1/2	2	2 1/2	3	4
Actual ID	**0.622**	**0.824**	**1.049**	**1.380**	**1.610**	**2.067**	**2.469**	**3.068**	**4.026**
Length (ft)	**Capacity in Cubic Feet of Gas per Hour**								
10	1,510	3,040	5,560	11,400	17,100	32,900	52,500	92,800	189,000
20	1,070	2,150	3,930	8,070	12,100	23,300	37,100	65,600	134,000
30	869	1,760	3,210	6,590	9,880	19,000	30,300	53,600	109,000
40	753	1,520	2,780	5,710	8,550	16,500	26,300	46,400	94,700
50	673	1,360	2,490	5,110	7,650	14,700	23,500	41,500	84,700
60	615	1,240	2,270	4,660	6,980	13,500	21,400	37,900	77,300
70	569	1,150	2,100	4,320	6,470	12,500	19,900	35,100	71,600
80	532	1,080	1,970	4,040	6,050	11,700	18,600	32,800	67,000
90	502	1,010	1,850	3,810	5,700	11,000	17,500	30,900	63,100
100	462	934	1,710	3,510	5,260	10,100	16,100	28,500	58,200
125	414	836	1,530	3,140	4,700	9,060	14,400	25,500	52,100
150	372	751	1,370	2,820	4,220	8,130	13,000	22,900	46,700
175	344	695	1,270	2,601	3,910	7,530	12,000	21,200	43,300
200	318	642	1,170	2,410	3,610	6,960	11,100	19,600	40,000
250	279	583	1,040	2,140	3,210	6,180	9,850	17,400	35,500
300	253	528	945	1,940	2,910	5,600	8,920	15,800	32,200
350	232	486	869	1,790	2,670	5,150	8,210	14,500	29,600
400	216	452	809	1,660	2,490	4,790	7,640	13,500	27,500
450	203	424	759	1,560	2,330	4,500	7,170	12,700	25,800
500	192	401	717	1,470	2,210	4,250	6,770	12,000	24,400
550	182	381	681	1,400	2,090	4,030	6,430	11,400	23,200
600	174	363	650	1,330	2,000	3,850	6,130	10,800	22,100
650	166	348	622	1,280	1,910	3,680	5,870	10,400	21,200
700	160	334	598	1,230	1,840	3,540	5,640	9,970	20,300
750	154	322	576	1,180	1,770	3,410	5,440	9,610	19,600
800	149	311	556	1,140	1,710	3,290	5,250	9,280	18,900
850	144	301	538	1,100	1,650	3,190	5,080	8,980	18,300
900	139	292	522	1,070	1,600	3,090	4,930	8,710	17,800
950	135	283	507	1,040	1,560	3,000	4,780	8,460	17,200
1,000	132	275	493	1,010	1,520	2,920	4,650	8,220	16,800
1,100	125	262	468	960	1,440	2,770	4,420	7,810	15,900
1,200	119	250	446	917	1,370	2,640	4,220	7,450	15,200
1,300	114	239	427	878	1,320	2,530	4,040	7,140	14,600
1,400	110	230	411	843	1,260	2,430	3,880	6,860	14,000
1,500	106	221	396	812	1,220	2,340	3,740	6,600	13,500
1,600	102	214	382	784	1,180	2,260	3,610	6,380	13,000
1,700	99	207	370	759	1,140	2,190	3,490	6,170	12,600
1,800	96	200	358	736	1,100	2,120	3,390	5,980	12,200
1,900	93	195	348	715	1,070	2,060	3,290	5,810	11,900
2,000	91	189	339	695	1,040	2,010	3,200	5,650	11,500

For SI: 1 inch = 25.4 mm, 1 foot = 304.8 mm, 1 pound per square inch = 6.895 kPa, 1-inch water column = 0.2488 kPa, 1 British thermal unit per hour = 0.2931 W, 1 cubic foot per hour = 0.0283 m^3/h, 1 degree = 0.01745 rad.

Note: All table entries have been rounded to three significant digits.

TABLE G2413.4(3) [402.4(9)]
SEMIRIGID COPPER TUBING

Gas	Natural
Inlet Pressure	Less than 2 psi
Pressure Drop	0.5 in. w.c.
Specific Gravity	0.60

TUBE SIZE (inches)										
Nominal	**K & L**	1/4	3/8	1/2	5/8	3/4	1	1 1/4	1 1/2	2
	ACR	3/8	1/2	5/8	3/4	7/8	1 1/8	1 3/8	—	—
Outside		**0.375**	**0.500**	**0.625**	**0.750**	**0.875**	**1.125**	**1.375**	**1.625**	**2.125**
Inside		**0.305**	**0.402**	**0.527**	**0.652**	**0.745**	**0.995**	**1.245**	**1.481**	**1.959**
Length (ft)		**Capacity in Cubic Feet of Gas per Hour**								
10		27	55	111	195	276	590	1,060	1,680	3,490
20		18	38	77	134	190	406	730	1,150	2,400
30		15	30	61	107	152	326	586	925	1,930
40		13	26	53	92	131	279	502	791	1,650
50		11	23	47	82	116	247	445	701	1,460
60		10	21	42	74	105	224	403	635	1,320
70		NA	19	39	68	96	206	371	585	1,220
80		NA	18	36	63	90	192	345	544	1,130
90		NA	17	34	59	84	180	324	510	1,060
100		NA	16	32	56	79	170	306	482	1,000
125		NA	14	28	50	70	151	271	427	890
150		NA	13	26	45	64	136	245	387	806
175		NA	12	24	41	59	125	226	356	742
200		NA	11	22	39	55	117	210	331	690
250		NA	NA	20	34	48	103	186	294	612
300		NA	NA	18	31	44	94	169	266	554
350		NA	NA	16	28	40	86	155	245	510
400		NA	NA	15	26	38	80	144	228	474
450		NA	NA	14	25	35	75	135	214	445
500		NA	NA	13	23	33	71	128	202	420
550		NA	NA	13	22	32	68	122	192	399
600		NA	NA	12	21	30	64	116	183	381
650		NA	NA	12	20	29	62	111	175	365
700		NA	NA	11	20	28	59	107	168	350
750		NA	NA	11	19	27	57	103	162	338
800		NA	NA	10	18	26	55	99	156	326
850		NA	NA	10	18	25	53	96	151	315
900		NA	NA	NA	17	24	52	93	147	306
950		NA	NA	NA	17	24	50	90	143	297
1,000		NA	NA	NA	16	23	49	88	139	289
1,100		NA	NA	NA	15	22	46	84	132	274
1,200		NA	NA	NA	15	21	44	80	126	262
1,300		NA	NA	NA	14	20	42	76	120	251
1,400		NA	NA	NA	13	19	41	73	116	241
1,500		NA	NA	NA	13	18	39	71	111	232
1,600		NA	NA	NA	13	18	38	68	108	224
1,700		NA	NA	NA	12	17	37	66	104	217
1,800		NA	NA	NA	12	17	36	64	101	210
1,900		NA	NA	NA	11	16	35	62	98	204
2,000		NA	NA	NA	11	16	34	60	95	199

For SI: 1 inch = 25.4 mm, 1 foot = 304.8 mm, 1 pound per square inch = 6.895 kPa, 1-inch water column = 0.2488 kPa, 1 British thermal unit per hour = 0.2931 W, 1 cubic foot per hour = 0.0283 m^3/h, 1 degree = 0.01745 rad.

Notes:

1. Table capacities are based on Type K copper tubing inside diameter (shown), which has the smallest inside diameter of the copper tubing products.
2. NA means a flow of less than 10 cfh.
3. All table entries have been rounded to three significant digits.

2999

TABLE G2413.4(4) [402.4(12)]
SEMIRIGID COPPER TUBING

Gas	Natural
Inlet Pressure	2.0 psi
Pressure Drop	1.0 psi
Specific Gravity	0.60

TUBE SIZE (inches)									
Nominal	K & L	1/4	3/8	1/2	5/8	3/4	1	1 1/4	1 1/2	2
	ACR	3/8	1/2	5/8	3/4	7/8	1 1/8	1 3/8	—	—
Outside		**0.375**	**0.500**	**0.625**	**0.750**	**0.875**	**1.125**	**1.375**	**1.625**	**2.125**
Inside		**0.305**	**0.402**	**0.527**	**0.652**	**0.745**	**0.995**	**1.245**	**1.481**	**1.959**
Length (ft)		**Capacity in Cubic Feet of Gas per Hour**								
10		245	506	1,030	1,800	2,550	5,450	9,820	15,500	32,200
20		169	348	708	1,240	1,760	3,750	6,750	10,600	22,200
30		135	279	568	993	1,410	3,010	5,420	8,550	17,800
40		116	239	486	850	1,210	2,580	4,640	7,310	15,200
50		103	212	431	754	1,070	2,280	4,110	6,480	13,500
60		93	192	391	683	969	2,070	3,730	5,870	12,200
70		86	177	359	628	891	1,900	3,430	5,400	11,300
80		80	164	334	584	829	1,770	3,190	5,030	10,500
90		75	154	314	548	778	1,660	2,990	4,720	9,820
100		71	146	296	518	735	1,570	2,830	4,450	9,280
125		63	129	263	459	651	1,390	2,500	3,950	8,220
150		57	117	238	416	590	1,260	2,270	3,580	7,450
175		52	108	219	383	543	1,160	2,090	3,290	6,850
200		49	100	204	356	505	1,080	1,940	3,060	6,380
250		43	89	181	315	448	956	1,720	2,710	5,650
300		39	80	164	286	406	866	1,560	2,460	5,120
350		36	74	150	263	373	797	1,430	2,260	4,710
400		33	69	140	245	347	741	1,330	2,100	4,380
450		31	65	131	230	326	696	1,250	1,970	4,110
500		30	61	124	217	308	657	1,180	1,870	3,880
550		28	58	118	206	292	624	1,120	1,770	3,690
600		27	55	112	196	279	595	1,070	1,690	3,520
650		26	53	108	188	267	570	1,030	1,620	3,370
700		25	51	103	181	256	548	986	1,550	3,240
750		24	49	100	174	247	528	950	1,500	3,120
800		23	47	96	168	239	510	917	1,450	3,010
850		22	46	93	163	231	493	888	1,400	2,920
900		22	44	90	158	224	478	861	1,360	2,830
950		21	43	88	153	217	464	836	1,320	2,740
1,000		20	42	85	149	211	452	813	1,280	2,670
1,100		19	40	81	142	201	429	772	1,220	2,540
1,200		18	38	77	135	192	409	737	1,160	2,420
1,300		18	36	74	129	183	392	705	1,110	2,320
1,400		17	35	71	124	176	376	678	1,070	2,230
1,500		16	34	68	120	170	363	653	1,030	2,140
1,600		16	33	66	116	164	350	630	994	2,070
1,700		15	31	64	112	159	339	610	962	2,000
1,800		15	30	62	108	154	329	592	933	1,940
1,900		14	30	60	105	149	319	575	906	1,890
2,000		14	29	59	102	145	310	559	881	1,830

For SI: 1 inch = 25.4 mm, 1 foot = 304.8 mm, 1 pound per square inch = 6.895 kPa, 1-inch water column = 0.2488 kPa, 1 British thermal unit per hour = 0.2931 W, 1 cubic foot per hour = 0.0283 m^3/h, 1 degree = 0.01745 rad.

Notes:

1. Table capacities are based on Type K copper tubing inside diameter (shown), which has the smallest inside diameter of the copper tubing products.
2. All table entries have been rounded to three significant digits.

TABLE G2413.4(5) [402.4(15)]
CORRUGATED STAINLESS STEEL TUBING (CSST)

Gas	Natural
Inlet Pressure	Less than 2 psi
Pressure Drop	0.5 in. w.c.
Specific Gravity	0.60

	TUBE SIZE (EHD)													
Flow Designation	13	15	18	19	23	25	30	31	37	39	46	48	60	62
Length (ft)	Capacity in Cubic Feet of Gas per Hour													
5	46	63	115	134	225	270	471	546	895	1,037	1,790	2,070	3,660	4,140
10	32	44	82	95	161	192	330	383	639	746	1,260	1,470	2,600	2,930
15	25	35	66	77	132	157	267	310	524	615	1,030	1,200	2,140	2,400
20	22	31	58	67	116	137	231	269	456	536	888	1,050	1,850	2,080
25	19	27	52	60	104	122	206	240	409	482	793	936	1,660	1,860
30	18	25	47	55	96	112	188	218	374	442	723	856	1,520	1,700
40	15	21	41	47	83	97	162	188	325	386	625	742	1,320	1,470
50	13	19	37	42	75	87	144	168	292	347	559	665	1,180	1,320
60	12	17	34	38	68	80	131	153	267	318	509	608	1,080	1,200
70	11	16	31	36	63	74	121	141	248	295	471	563	1,000	1,110
80	10	15	29	33	60	69	113	132	232	277	440	527	940	1,040
90	10	14	28	32	57	65	107	125	219	262	415	498	887	983
100	9	13	26	30	54	62	101	118	208	249	393	472	843	933
150	7	10	20	23	42	48	78	91	171	205	320	387	691	762
200	6	9	18	21	38	44	71	82	148	179	277	336	600	661
250	5	8	16	19	34	39	63	74	133	161	247	301	538	591
300	5	7	15	17	32	36	57	67	95	148	226	275	492	540

For SI: 1 inch = 25.4 mm, 1 foot = 304.8 mm, 1 pound per square inch = 6.895 kPa, 1-inch water column = 0.2488 kPa, 1 British thermal unit per hour = 0.2931 W, 1 cubic foot per hour = 0.0283 m^3/h, 1 degree = 0.01745 rad.

Notes:

1. Table includes losses for four 90-degree bends and two end fittings. Tubing runs with larger numbers of bends or fittings shall be increased by an equivalent length of tubing to the following equation: $L = 1.3n$, where L is additional length (feet) of tubing and n is the number of additional fittings or bends.
2. EHD—Equivalent Hydraulic Diameter, which is a measure of the relative hydraulic efficiency between different tubing sizes. The greater the value of EHD, the greater the gas capacity of the tubing.
3. All table entries have been rounded to three significant digits.

TABLE G2413.4(6) [402.4(18)]
CORRUGATED STAINLESS STEEL TUBING (CSST)

Gas	Natural
Inlet Pressure	2.0 psi
Pressure Drop	1.0 psi
Specific Gravity	0.60

	TUBE SIZE (EHD)													
Flow Designation	**13**	**15**	**18**	**19**	**23**	**25**	**30**	**31**	**37**	**39**	**46**	**48**	**60**	**62**
Length (ft)	**Capacity in Cubic Feet of Gas Per Hour**													
10	270	353	587	700	1,100	1,370	2,590	2,990	4,510	5,037	9,600	10,700	18,600	21,600
25	166	220	374	444	709	876	1,620	1,870	2,890	3,258	6,040	6,780	11,900	13,700
30	151	200	342	405	650	801	1,480	1,700	2,640	2,987	5,510	6,200	10,900	12,500
40	129	172	297	351	567	696	1,270	1,470	2,300	2,605	4,760	5,380	9,440	10,900
50	115	154	266	314	510	624	1,140	1,310	2,060	2,343	4,260	4,820	8,470	9,720
75	93	124	218	257	420	512	922	1,070	1,690	1,932	3,470	3,950	6,940	7,940
80	89	120	211	249	407	496	892	1,030	1,640	1,874	3,360	3,820	6,730	7,690
100	79	107	189	222	366	445	795	920	1,470	1,685	3,000	3,420	6,030	6,880
150	64	87	155	182	302	364	646	748	1,210	1,389	2,440	2,800	4,940	5,620
200	55	75	135	157	263	317	557	645	1,050	1,212	2,110	2,430	4,290	4,870
250	49	67	121	141	236	284	497	576	941	1,090	1,890	2,180	3,850	4,360
300	44	61	110	129	217	260	453	525	862	999	1,720	1,990	3,520	3,980
400	38	52	96	111	189	225	390	453	749	871	1,490	1,730	3,060	3,450
500	34	46	86	100	170	202	348	404	552	783	1,330	1,550	2,740	3,090

For SI: 1 inch = 25.4 mm, 1 foot = 304.8 mm, 1 pound per square inch = 6.895 kPa, 1-inch water column = 0.2488 kPa, 1 British thermal unit per hour = 0.2931 W, 1 cubic foot per hour = 0.0283 m^3/h, 1 degree = 0.01745 rad.

Notes:

1. Table does not include effect of pressure drop across the line regulator. Where regulator loss exceeds $^3/_4$ psi, DO NOT USE THIS TABLE. Consult with the regulator manufacturer for pressure drops and capacity factors. Pressure drops across a regulator can vary with flow rate.
2. CAUTION: Capacities shown in the table might exceed maximum capacity for a selected regulator. Consult with the regulator or tubing manufacturer for guidance.
3. Table includes losses for four 90-degree bends and two end fittings. Tubing runs with larger numbers of bends or fittings shall be increased by an equivalent length of tubing to the following equation: $L = 1.3n$ where L is additional length (feet) of tubing and n is the number of additional fittings or bends.
4. EHD—Equivalent Hydraulic Diameter, which is a measure of the relative hydraulic efficiency between different tubing sizes. The greater the value of EHD, the greater the gas capacity of the tubing.
5. All table entries have been rounded to three significant digits.

TABLE G2413.4(7) [402.4(21)]
POLYETHYLENE PLASTIC PIPE

Gas	Natural
Inlet Pressure	Less than 2 psi
Pressure Drop	0.5 in. w.c.
Specific Gravity	0.60

PIPE SIZE (inches)						
Nominal OD	1/2	3/4	1	1 1/4	1 1/2	2
Designation	SDR 9	SDR 11	SDR 11	SDR 10	SDR 11	SDR 11
Actual ID	0.660	0.860	1.077	1.328	1.554	1.943
Length (ft)	Capacity in Cubic Feet of Gas per Hour					
10	201	403	726	1,260	1,900	3,410
20	138	277	499	865	1,310	2,350
30	111	222	401	695	1,050	1,880
40	95	190	343	594	898	1,610
50	84	169	304	527	796	1,430
60	76	153	276	477	721	1,300
70	70	140	254	439	663	1,190
80	65	131	236	409	617	1,110
90	61	123	221	383	579	1,040
100	58	116	209	362	547	983
125	51	103	185	321	485	871
150	46	93	168	291	439	789
175	43	86	154	268	404	726
200	40	80	144	249	376	675
250	35	71	127	221	333	598
300	32	64	115	200	302	542
350	29	59	106	184	278	499
400	27	55	99	171	258	464
450	26	51	93	160	242	435
500	24	48	88	152	229	411

For SI: 1 inch = 25.4 mm, 1 foot = 304.8 mm, 1 pound per square inch = 6.895 kPa, 1-inch water column = 0.2488 kPa, 1 British thermal unit per hour = 0.2931 W, 1 cubic foot per hour = 0.0283 m^3/h, 1 degree = 0.01745 rad.

Note: All table entries have been rounded to three significant digits.

TABLE G2413.4(8) [402.4(22)]
POLYETHYLENE PLASTIC PIPE

Gas	Natural
Inlet Pressure	2.0 psi
Pressure Drop	1.0 psi
Specific Gravity	0.60

	PIPE SIZE (inches)					
Nominal OD	1/2	3/4	1	1 1/4	1 1/2	2
Designation	**SDR 9**	**SDR 11**	**SDR 11**	**SDR 10**	**SDR 11**	**SDR 11**
Actual ID	**0.660**	**0.860**	**1.077**	**1.328**	**1.554**	**1.943**
Length (ft)	**Capacity in Cubic Feet of Gas per Hour**					
10	1,860	3,720	6,710	11,600	17,600	31,600
20	1,280	2,560	4,610	7,990	12,100	21,700
30	1,030	2,050	3,710	6,420	9,690	17,400
40	878	1,760	3,170	5,490	8,300	14,900
50	778	1,560	2,810	4,870	7,350	13,200
60	705	1,410	2,550	4,410	6,660	12,000
70	649	1,300	2,340	4,060	6,130	11,000
80	603	1,210	2,180	3,780	5,700	10,200
90	566	1,130	2,050	3,540	5,350	9,610
100	535	1,070	1,930	3,350	5,050	9,080
125	474	949	1,710	2,970	4,480	8,050
150	429	860	1,550	2,690	4,060	7,290
175	395	791	1,430	2,470	3,730	6,710
200	368	736	1,330	2,300	3,470	6,240
250	326	652	1,180	2,040	3,080	5,530
300	295	591	1,070	1,850	2,790	5,010
350	272	544	981	1,700	2,570	4,610
400	253	506	913	1,580	2,390	4,290
450	237	475	856	1,480	2,240	4,020
500	224	448	809	1,400	2,120	3,800
550	213	426	768	1,330	2,010	3,610
600	203	406	733	1,270	1,920	3,440
650	194	389	702	1,220	1,840	3,300
700	187	374	674	1,170	1,760	3,170
750	180	360	649	1,130	1,700	3,050
800	174	348	627	1,090	1,640	2,950
850	168	336	607	1,050	1,590	2,850
900	163	326	588	1,020	1,540	2,770
950	158	317	572	990	1,500	2,690
1,000	154	308	556	963	1,450	2,610
1,100	146	293	528	915	1,380	2,480
1,200	139	279	504	873	1,320	2,370
1,300	134	267	482	836	1,260	2,270
1,400	128	257	463	803	1,210	2,180
1,500	124	247	446	773	1,170	2,100
1,600	119	239	431	747	1,130	2,030
1,700	115	231	417	723	1,090	1,960
1,800	112	224	404	701	1,060	1,900
1,900	109	218	393	680	1,030	1,850
2,000	106	212	382	662	1,000	1,800

For SI: 1 inch = 25.4 mm, 1 foot = 304.8 mm, 1 pound per square inch = 6.895 kPa, 1-inch water column = 0.2488 kPa, 1 British thermal unit per hour = 0.2931 W, 1 cubic foot per hour = 0.0283 m^3/h, 1 degree = 0.01745 rad.

Note: All table entries have been rounded to three significant digits.

TABLE G2413.4(9) [402.4(25)]
SCHEDULE 40 METALLIC PIPE

Gas	Undiluted Propane
Inlet Pressure	10.0 psi
Pressure Drop	1.0 psi
Specific Gravity	1.50

INTENDED USE	**Pipe sizing between first stage (high-pressure regulator) and second stage (low-pressure regulator).**								
	PIPE SIZE (inches)								
Nominal	**1/2**	**3/4**	**1**	**1 1/4**	**1 1/2**	**2**	**2 1/2**	**3**	**4**
Actual ID	**0.622**	**0.824**	**1.049**	**1.380**	**1.610**	**2.067**	**2.469**	**3.068**	**4.026**
Length (ft)	**Capacity in Thousands of Btu per Hour**								
10	3,320	6,950	13,100	26,900	40,300	77,600	124,000	219,000	446,000
20	2,280	4,780	9,000	18,500	27,700	53,300	85,000	150,000	306,000
30	1,830	3,840	7,220	14,800	22,200	42,800	68,200	121,000	246,000
40	1,570	3,280	6,180	12,700	19,000	36,600	58,400	103,000	211,000
50	1,390	2,910	5,480	11,300	16,900	32,500	51,700	91,500	187,000
60	1,260	2,640	4,970	10,200	15,300	29,400	46,900	82,900	169,000
70	1,160	2,430	4,570	9,380	14,100	27,100	43,100	76,300	156,000
80	1,080	2,260	4,250	8,730	13,100	25,200	40,100	70,900	145,000
90	1,010	2,120	3,990	8,190	12,300	23,600	37,700	66,600	136,000
100	956	2,000	3,770	7,730	11,600	22,300	35,600	62,900	128,000
125	848	1,770	3,340	6,850	10,300	19,800	31,500	55,700	114,000
150	768	1,610	3,020	6,210	9,300	17,900	28,600	50,500	103,000
175	706	1,480	2,780	5,710	8,560	16,500	26,300	46,500	94,700
200	657	1,370	2,590	5,320	7,960	15,300	24,400	43,200	88,100
250	582	1,220	2,290	4,710	7,060	13,600	21,700	38,300	78,100
300	528	1,100	2,080	4,270	6,400	12,300	19,600	34,700	70,800
350	486	1,020	1,910	3,930	5,880	11,300	18,100	31,900	65,100
400	452	945	1,780	3,650	5,470	10,500	16,800	29,700	60,600
450	424	886	1,670	3,430	5,140	9,890	15,800	27,900	56,800
500	400	837	1,580	3,240	4,850	9,340	14,900	26,300	53,700
550	380	795	1,500	3,070	4,610	8,870	14,100	25,000	51,000
600	363	759	1,430	2,930	4,400	8,460	13,500	23,900	48,600
650	347	726	1,370	2,810	4,210	8,110	12,900	22,800	46,600
700	334	698	1,310	2,700	4,040	7,790	12,400	21,900	44,800
750	321	672	1,270	2,600	3,900	7,500	12,000	21,100	43,100
800	310	649	1,220	2,510	3,760	7,240	11,500	20,400	41,600
850	300	628	1,180	2,430	3,640	7,010	11,200	19,800	40,300
900	291	609	1,150	2,360	3,530	6,800	10,800	19,200	39,100
950	283	592	1,110	2,290	3,430	6,600	10,500	18,600	37,900
1,000	275	575	1,080	2,230	3,330	6,420	10,200	18,100	36,900
1,100	261	546	1,030	2,110	3,170	6,100	9,720	17,200	35,000
1,200	249	521	982	2,020	3,020	5,820	9,270	16,400	33,400
1,300	239	499	940	1,930	2,890	5,570	8,880	15,700	32,000
1,400	229	480	903	1,850	2,780	5,350	8,530	15,100	30,800
1,500	221	462	870	1,790	2,680	5,160	8,220	14,500	29,600
1,600	213	446	840	1,730	2,590	4,980	7,940	14,000	28,600
1,700	206	432	813	1,670	2,500	4,820	7,680	13,600	27,700
1,800	200	419	789	1,620	2,430	4,670	7,450	13,200	26,900
1,900	194	407	766	1,570	2,360	4,540	7,230	12,800	26,100
2,000	189	395	745	1,530	2,290	4,410	7,030	12,400	25,400

For SI: 1 inch = 25.4 mm, 1 foot = 304.8 mm, 1 pound per square inch = 6.895 kPa, 1-inch water column = 0.2488 kPa, 1 British thermal unit per hour = 0.2931 W, 1 cubic foot per hour = 0.0283 m^3/h, 1 degree = 0.01745 rad.

Note: All table entries have been rounded to three significant digits.

3005

TABLE G2413.4(10) [402.4(26)]
SCHEDULE 40 METALLIC PIPE

Gas	Undiluted Propane
Inlet Pressure	10.0 psi
Pressure Drop	3.0 psi
Specific Gravity	1.50

INTENDED USE		**Pipe sizing between first stage (high-pressure regulator) and second stage (low-pressure regulator).**							
		PIPE SIZE (inches)							
Nominal	**1/2**	**3/4**	**1**	**1 1/4**	**1 1/2**	**2**	**2 1/2**	**3**	**4**
Actual ID	**0.622**	**0.824**	**1.049**	**1.380**	**1.610**	**2.067**	**2.469**	**3.068**	**4.026**
Length (ft)	**Capacity in Thousands of Btu per Hour**								
10	5,890	12,300	23,200	47,600	71,300	137,000	219,000	387,000	789,000
20	4,050	8,460	15,900	32,700	49,000	94,400	150,000	266,000	543,000
30	3,250	6,790	12,800	26,300	39,400	75,800	121,000	214,000	436,000
40	2,780	5,810	11,000	22,500	33,700	64,900	103,000	183,000	373,000
50	2,460	5,150	9,710	19,900	29,900	57,500	91,600	162,000	330,000
60	2,230	4,670	8,790	18,100	27,100	52,100	83,000	147,000	299,000
70	2,050	4,300	8,090	16,600	24,900	47,900	76,400	135,000	275,000
80	1,910	4,000	7,530	15,500	23,200	44,600	71,100	126,000	256,000
90	1,790	3,750	7,060	14,500	21,700	41,800	66,700	118,000	240,000
100	1,690	3,540	6,670	13,700	20,500	39,500	63,000	111,000	227,000
125	1,500	3,140	5,910	12,100	18,200	35,000	55,800	98,700	201,000
150	1,360	2,840	5,360	11,000	16,500	31,700	50,600	89,400	182,000
175	1,250	2,620	4,930	10,100	15,200	29,200	46,500	82,300	167,800
200	1,160	2,430	4,580	9,410	14,100	27,200	43,300	76,500	156,100
250	1,030	2,160	4,060	8,340	12,500	24,100	38,400	67,800	138,400
300	935	1,950	3,680	7,560	11,300	21,800	34,800	61,500	125,400
350	860	1,800	3,390	6,950	10,400	20,100	32,000	56,500	115,300
400	800	1,670	3,150	6,470	9,690	18,700	29,800	52,600	107,300
450	751	1,570	2,960	6,070	9,090	17,500	27,900	49,400	100,700
500	709	1,480	2,790	5,730	8,590	16,500	26,400	46,600	95,100
550	673	1,410	2,650	5,450	8,160	15,700	25,000	44,300	90,300
600	642	1,340	2,530	5,200	7,780	15,000	23,900	42,200	86,200
650	615	1,290	2,420	4,980	7,450	14,400	22,900	40,500	82,500
700	591	1,240	2,330	4,780	7,160	13,800	22,000	38,900	79,300
750	569	1,190	2,240	4,600	6,900	13,300	21,200	37,400	76,400
800	550	1,150	2,170	4,450	6,660	12,800	20,500	36,200	73,700
850	532	1,110	2,100	4,300	6,450	12,400	19,800	35,000	71,400
900	516	1,080	2,030	4,170	6,250	12,000	19,200	33,900	69,200
950	501	1,050	1,970	4,050	6,070	11,700	18,600	32,900	67,200
1,000	487	1,020	1,920	3,940	5,900	11,400	18,100	32,000	65,400
1,100	463	968	1,820	3,740	5,610	10,800	17,200	30,400	62,100
1,200	442	923	1,740	3,570	5,350	10,300	16,400	29,000	59,200
1,300	423	884	1,670	3,420	5,120	9,870	15,700	27,800	56,700
1,400	406	849	1,600	3,280	4,920	9,480	15,100	26,700	54,500
1,500	391	818	1,540	3,160	4,740	9,130	14,600	25,700	52,500
1,600	378	790	1,490	3,060	4,580	8,820	14,100	24,800	50,700
1,700	366	765	1,440	2,960	4,430	8,530	13,600	24,000	49,000
1,800	355	741	1,400	2,870	4,300	8,270	13,200	23,300	47,600
1,900	344	720	1,360	2,780	4,170	8,040	12,800	22,600	46,200
2,000	335	700	1,320	2,710	4,060	7,820	12,500	22,000	44,900

For SI: 1 inch = 25.4 mm, 1 foot = 304.8 mm, 1 pound per square inch = 6.895 kPa, 1-inch water column = 0.2488 kPa, 1 British thermal unit per hour = 0.2931 W, 1 cubic foot per hour = 0.0283 m^3/h, 1 degree = 0.01745 rad.

Note: All table entries have been rounded to three significant digits.

TABLE G2413.4(11) [402.4(27)]
SCHEDULE 40 METALLIC PIPE

Gas	Undiluted Propane
Inlet Pressure	2.0 psi
Pressure Drop	1.0 psi
Specific Gravity	1.50

INTENDED USE	**Pipe sizing between 2 psig service and line pressure regulator.**								
	PIPE SIZE (inches)								
Nominal	**1/2**	**3/4**	**1**	**1 1/4**	**1 1/2**	**2**	**2 1/2**	**3**	**4**
Actual ID	**0.622**	**0.824**	**1.049**	**1.380**	**1.610**	**2.067**	**2.469**	**3.068**	**4.026**
Length (ft)	**Capacity in Thousands of Btu per Hour**								
10	2,680	5,590	10,500	21,600	32,400	62,400	99,500	176,000	359,000
20	1,840	3,850	7,240	14,900	22,300	42,900	68,400	121,000	247,000
30	1,480	3,090	5,820	11,900	17,900	34,500	54,900	97,100	198,000
40	1,260	2,640	4,980	10,200	15,300	29,500	47,000	83,100	170,000
50	1,120	2,340	4,410	9,060	13,600	26,100	41,700	73,700	150,000
60	1,010	2,120	4,000	8,210	12,300	23,700	37,700	66,700	136,000
70	934	1,950	3,680	7,550	11,300	21,800	34,700	61,400	125,000
80	869	1,820	3,420	7,020	10,500	20,300	32,300	57,100	116,000
90	815	1,700	3,210	6,590	9,880	19,000	30,300	53,600	109,000
100	770	1,610	3,030	6,230	9,330	18,000	28,600	50,600	103,000
125	682	1,430	2,690	5,520	8,270	15,900	25,400	44,900	91,500
150	618	1,290	2,440	5,000	7,490	14,400	23,000	40,700	82,900
175	569	1,190	2,240	4,600	6,890	13,300	21,200	37,400	76,300
200	529	1,110	2,080	4,280	6,410	12,300	19,700	34,800	71,000
250	469	981	1,850	3,790	5,680	10,900	17,400	30,800	62,900
300	425	889	1,670	3,440	5,150	9,920	15,800	27,900	57,000
350	391	817	1,540	3,160	4,740	9,120	14,500	25,700	52,400
400	364	760	1,430	2,940	4,410	8,490	13,500	23,900	48,800
450	341	714	1,340	2,760	4,130	7,960	12,700	22,400	45,800
500	322	674	1,270	2,610	3,910	7,520	12,000	21,200	43,200
550	306	640	1,210	2,480	3,710	7,140	11,400	20,100	41,100
600	292	611	1,150	2,360	3,540	6,820	10,900	19,200	39,200
650	280	585	1,100	2,260	3,390	6,530	10,400	18,400	37,500
700	269	562	1,060	2,170	3,260	6,270	9,990	17,700	36,000
750	259	541	1,020	2,090	3,140	6,040	9,630	17,000	34,700
800	250	523	985	2,020	3,030	5,830	9,300	16,400	33,500
850	242	506	953	1,960	2,930	5,640	9,000	15,900	32,400
900	235	490	924	1,900	2,840	5,470	8,720	15,400	31,500
950	228	476	897	1,840	2,760	5,310	8,470	15,000	30,500
1,000	222	463	873	1,790	2,680	5,170	8,240	14,600	29,700
1,100	210	440	829	1,700	2,550	4,910	7,830	13,800	28,200
1,200	201	420	791	1,620	2,430	4,680	7,470	13,200	26,900
1,300	192	402	757	1,550	2,330	4,490	7,150	12,600	25,800
1,400	185	386	727	1,490	2,240	4,310	6,870	12,100	24,800
1,500	178	372	701	1,440	2,160	4,150	6,620	11,700	23,900
1,600	172	359	677	1,390	2,080	4,010	6,390	11,300	23,000
1,700	166	348	655	1,340	2,010	3,880	6,180	10,900	22,300
1,800	161	337	635	1,300	1,950	3,760	6,000	10,600	21,600
1,900	157	327	617	1,270	1,900	3,650	5,820	10,300	21,000
2,000	152	318	600	1,230	1,840	3,550	5,660	10,000	20,400

For SI: 1 inch = 25.4 mm, 1 foot = 304.8 mm, 1 pound per square inch = 6.895 kPa, 1-inch water column = 0.2488 kPa, 1 British thermal unit per hour = 0.2931 W, 1 cubic foot per hour = 0.0283 m^3/h, 1 degree = 0.01745 rad.

Note: All table entries have been rounded to three significant digits.

3007

TABLE G2413.4(12) [402.4(28)]
SCHEDULE 40 METALLIC PIPE

Gas	Undiluted Propane
Inlet Pressure	11.0 in. w.c.
Pressure Drop	0.5 in. w.c.
Specific Gravity	1.50

INTENDED USE	**Pipe sizing between single- or second-stage (low pressure) regulator and appliance.**								
	PIPE SIZE (inches)								
Nominal	**1/2**	**3/4**	**1**	**1 1/4**	**1 1/2**	**2**	**2 1/2**	**3**	**4**
Actual ID	**0.622**	**0.824**	**1.049**	**1.380**	**1.610**	**2.067**	**2.469**	**3.068**	**4.026**
Length (ft)	**Capacity in Thousands of Btu per Hour**								
10	291	608	1,150	2,350	3,520	6,790	10,800	19,100	39,000
20	200	418	787	1,620	2,420	4,660	7,430	13,100	26,800
30	160	336	632	1,300	1,940	3,750	5,970	10,600	21,500
40	137	287	541	1,110	1,660	3,210	5,110	9,030	18,400
50	122	255	480	985	1,480	2,840	4,530	8,000	16,300
60	110	231	434	892	1,340	2,570	4,100	7,250	14,800
80	101	212	400	821	1,230	2,370	3,770	6,670	13,600
100	94	197	372	763	1,140	2,200	3,510	6,210	12,700
125	89	185	349	716	1,070	2,070	3,290	5,820	11,900
150	84	175	330	677	1,010	1,950	3,110	5,500	11,200
175	74	155	292	600	899	1,730	2,760	4,880	9,950
200	67	140	265	543	814	1,570	2,500	4,420	9,010
250	62	129	243	500	749	1,440	2,300	4,060	8,290
300	58	120	227	465	697	1,340	2,140	3,780	7,710
350	51	107	201	412	618	1,190	1,900	3,350	6,840
400	46	97	182	373	560	1,080	1,720	3,040	6,190
450	42	89	167	344	515	991	1,580	2,790	5,700
500	40	83	156	320	479	922	1,470	2,600	5,300
550	37	78	146	300	449	865	1,380	2,440	4,970
600	35	73	138	283	424	817	1,300	2,300	4,700
650	33	70	131	269	403	776	1,240	2,190	4,460
700	32	66	125	257	385	741	1,180	2,090	4,260
750	30	64	120	246	368	709	1,130	2,000	4,080
800	29	61	115	236	354	681	1,090	1,920	3,920
850	28	59	111	227	341	656	1,050	1,850	3,770
900	27	57	107	220	329	634	1,010	1,790	3,640
950	26	55	104	213	319	613	978	1,730	3,530
1,000	25	53	100	206	309	595	948	1,680	3,420
1,100	25	52	97	200	300	578	921	1,630	3,320
1,200	24	50	95	195	292	562	895	1,580	3,230
1,300	23	48	90	185	277	534	850	1,500	3,070
1,400	22	46	86	176	264	509	811	1,430	2,930
1,500	21	44	82	169	253	487	777	1,370	2,800
1,200	24	50	95	195	292	562	895	1,580	3,230
1,300	23	48	90	185	277	534	850	1,500	3,070
1,400	22	46	86	176	264	509	811	1,430	2,930
1,500	21	44	82	169	253	487	777	1,370	2,800
1,600	20	42	79	162	243	468	746	1,320	2,690
1,700	19	40	76	156	234	451	719	1,270	2,590
1,800	19	39	74	151	226	436	694	1,230	2,500
1,900	18	38	71	146	219	422	672	1,190	2,420
2,000	18	37	69	142	212	409	652	1,150	2,350

For SI: 1 inch = 25.4 mm, 1 foot = 304.8 mm, 1 pound per square inch = 6.895 kPa, 1-inch water column = 0.2488 kPa, 1 British thermal unit per hour = 0.2931 W, 1 cubic foot per hour = 0.0283 m^3/h, 1 degree = 0.01745 rad.

Note: All table entries have been rounded to three significant digits.

TABLE G2413.4(13) [402.4(29)]
SEMIRIGID COPPER TUBING

Gas	Undiluted Propane
Inlet Pressure	10.0 psi
Pressure Drop	1.0 psi
Specific Gravity	1.50

INTENDED USE		Sizing between first stage (high-pressure regulator) and second stage (low-pressure regulator).								
		TUBE SIZE (inches)								
Nominal	K & L	1/4	3/8	1/2	5/8	3/4	1	1 1/4	1 1/2	2
	ACR	3/8	1/2	5/8	3/4	7/8	1 1/8	1 3/8	—	—
Outside		0.375	0.500	0.625	0.750	0.875	1.125	1.375	1.625	2.125
Inside		0.305	0.402	0.527	0.652	0.745	0.995	1.245	1.481	1.959
Length (ft)		Capacity in Thousands of Btu per Hour								
10		513	1,060	2,150	3,760	5,330	11,400	20,500	32,300	67,400
20		352	727	1,480	2,580	3,670	7,830	14,100	22,200	46,300
30		283	584	1,190	2,080	2,940	6,290	11,300	17,900	37,200
40		242	500	1,020	1,780	2,520	5,380	9,690	15,300	31,800
50		215	443	901	1,570	2,230	4,770	8,590	13,500	28,200
60		194	401	816	1,430	2,020	4,320	7,780	12,300	25,600
70		179	369	751	1,310	1,860	3,980	7,160	11,300	23,500
80		166	343	699	1,220	1,730	3,700	6,660	10,500	21,900
90		156	322	655	1,150	1,630	3,470	6,250	9,850	20,500
100		147	304	619	1,080	1,540	3,280	5,900	9,310	19,400
125		131	270	549	959	1,360	2,910	5,230	8,250	17,200
150		118	244	497	869	1,230	2,630	4,740	7,470	15,600
175		109	225	457	799	1,130	2,420	4,360	6,880	14,300
200		101	209	426	744	1,060	2,250	4,060	6,400	13,300
250		90	185	377	659	935	2,000	3,600	5,670	11,800
300		81	168	342	597	847	1,810	3,260	5,140	10,700
350		75	155	314	549	779	1,660	3,000	4,730	9,840
400		70	144	292	511	725	1,550	2,790	4,400	9,160
450		65	135	274	480	680	1,450	2,620	4,130	8,590
500		62	127	259	453	643	1,370	2,470	3,900	8,120
550		59	121	246	430	610	1,300	2,350	3,700	7,710
600		56	115	235	410	582	1,240	2,240	3,530	7,350
650		54	111	225	393	558	1,190	2,140	3,380	7,040
700		51	106	216	378	536	1,140	2,060	3,250	6,770
750		50	102	208	364	516	1,100	1,980	3,130	6,520
800		48	99	201	351	498	1,060	1,920	3,020	6,290
850		46	96	195	340	482	1,030	1,850	2,920	6,090
900		45	93	189	330	468	1,000	1,800	2,840	5,910
950		44	90	183	320	454	970	1,750	2,750	5,730
1,000		42	88	178	311	442	944	1,700	2,680	5,580
1,100		40	83	169	296	420	896	1,610	2,540	5,300
1,200		38	79	161	282	400	855	1,540	2,430	5,050
1,300		37	76	155	270	383	819	1,470	2,320	4,840
1,400		35	73	148	260	368	787	1,420	2,230	4,650
1,500		34	70	143	250	355	758	1,360	2,150	4,480
1,600		33	68	138	241	343	732	1,320	2,080	4,330
1,700		32	66	134	234	331	708	1,270	2,010	4,190
1,800		31	64	130	227	321	687	1,240	1,950	4,060
1,900		30	62	126	220	312	667	1,200	1,890	3,940
2,000		29	60	122	214	304	648	1,170	1,840	3,830

For SI: 1 inch = 25.4 mm, 1 foot = 304.8 mm, 1 pound per square inch = 6.895 kPa, 1-inch water column = 0.2488 kPa, 1 British thermal unit per hour = 0.2931 W, 1 cubic foot per hour = 0.0283 m^3/h, 1 degree = 0.01745 rad.

Notes:

1. Table capacities are based on Type K copper tubing inside diameter (shown), which has the smallest inside diameter of the copper tubing products.
2. All table entries have been rounded to three significant digits.

3009

TABLE G2413.4(14) [402.4(30)] SEMIRIGID COPPER TUBING

Gas	Undiluted Propane
Inlet Pressure	11.0 in. w.c.
Pressure Drop	0.5 in. w.c.
Specific Gravity	1.50

INTENDED USE		Sizing between single- or second-stage (low-pressure regulator) and appliance.								
		TUBE SIZE (inches)								
Nominal	K & L	1/4	3/8	1/2	5/8	3/4	1	1 1/4	1 1/2	2
	ACR	3/8	1/2	5/8	3/4	7/8	1 1/8	1 3/8	—	—
Outside		0.375	0.500	0.625	0.750	0.875	1.125	1.375	1.625	2.125
Inside		0.305	0.402	0.527	0.652	0.745	0.995	1.245	1.481	1.959
Length (ft)		Capacity in Thousands of Btu per Hour								
10		45	93	188	329	467	997	1,800	2,830	5,890
20		31	64	129	226	321	685	1,230	1,950	4,050
30		25	51	104	182	258	550	991	1,560	3,250
40		21	44	89	155	220	471	848	1,340	2,780
50		19	39	79	138	195	417	752	1,180	2,470
60		17	35	71	125	177	378	681	1,070	2,240
70		16	32	66	115	163	348	626	988	2,060
80		15	30	61	107	152	324	583	919	1,910
90		14	28	57	100	142	304	547	862	1,800
100		13	27	54	95	134	287	517	814	1,700
125		11	24	48	84	119	254	458	722	1,500
150		10	21	44	76	108	230	415	654	1,360
175		NA	20	40	70	99	212	382	602	1,250
200		NA	18	37	65	92	197	355	560	1,170
250		NA	16	33	58	82	175	315	496	1,030
300		NA	15	30	52	74	158	285	449	936
350		NA	14	28	48	68	146	262	414	861
400		NA	13	26	45	63	136	244	385	801
450		NA	12	24	42	60	127	229	361	752
500		NA	11	23	40	56	120	216	341	710
550		NA	11	22	38	53	114	205	324	674
600		NA	10	21	36	51	109	196	309	643
650		NA	NA	20	34	49	104	188	296	616
700		NA	NA	19	33	47	100	180	284	592
750		NA	NA	18	32	45	96	174	274	570
800		NA	NA	18	31	44	93	168	264	551
850		NA	NA	17	30	42	90	162	256	533
900		NA	NA	17	29	41	87	157	248	517
950		NA	NA	16	28	40	85	153	241	502
1,000		NA	NA	16	27	39	83	149	234	488
1,100		NA	NA	15	26	37	78	141	223	464
1,200		NA	NA	14	25	35	75	135	212	442
1,300		NA	NA	14	24	34	72	129	203	423
1,400		NA	NA	13	23	32	69	124	195	407
1,500		NA	NA	13	22	31	66	119	188	392
1,600		NA	NA	12	21	30	64	115	182	378
1,700		NA	NA	12	20	29	62	112	176	366
1,800		NA	NA	11	20	28	60	108	170	355
1,900		NA	NA	11	19	27	58	105	166	345
2,000		NA	NA	11	19	27	57	102	161	335

For SI: 1 inch = 25.4 mm, 1 foot = 304.8 mm, 1 pound per square inch = 6.895 kPa, 1-inch water column = 0.2488 kPa, 1 British thermal unit per hour = 0.2931 W, 1 cubic foot per hour = 0.0283 m^3/h, 1 degree = 0.01745 rad.

Notes:

1. Table capacities are based on Type K copper tubing inside diameter (shown), which has the smallest inside diameter of the copper tubing products.
2. NA means a flow of less than 10,000 Btu/hr.
3. All table entries have been rounded to three significant digits.

TABLE G2413.4(15) [402.4(31)]
SEMIRIGID COPPER TUBING

Gas	Undiluted Propane
Inlet Pressure	2.0 psi
Pressure Drop	1.0 psi
Specific Gravity	1.50

INTENDED USE		**Tube sizing between 2 psig service and line pressure regulator.**								
TUBE SIZE (inches)										
Nominal	**K & L**	1/4	3/8	1/2	5/8	3/4	1	1 1/4	1 1/2	2
	ACR	3/8	1/2	5/8	3/4	7/8	1 1/8	1 3/8	—	—
Outside		**0.375**	**0.500**	**0.625**	**0.750**	**0.875**	**1.125**	**1.375**	**1.625**	**2.125**
Inside		**0.305**	**0.402**	**0.527**	**0.652**	**0.745**	**0.995**	**1.245**	**1.481**	**1.959**
Length (ft)		**Capacity in Thousands of Btu per Hour**								
10		413	852	1,730	3,030	4,300	9,170	16,500	26,000	54,200
20		284	585	1,190	2,080	2,950	6,310	11,400	17,900	37,300
30		228	470	956	1,670	2,370	5,060	9,120	14,400	29,900
40		195	402	818	1,430	2,030	4,330	7,800	12,300	25,600
50		173	356	725	1,270	1,800	3,840	6,920	10,900	22,700
60		157	323	657	1,150	1,630	3,480	6,270	9,880	20,600
70		144	297	605	1,060	1,500	3,200	5,760	9,090	18,900
80		134	276	562	983	1,390	2,980	5,360	8,450	17,600
90		126	259	528	922	1,310	2,790	5,030	7,930	16,500
100		119	245	498	871	1,240	2,640	4,750	7,490	15,600
125		105	217	442	772	1,100	2,340	4,210	6,640	13,800
150		95	197	400	700	992	2,120	3,820	6,020	12,500
175		88	181	368	644	913	1,950	3,510	5,540	11,500
200		82	168	343	599	849	1,810	3,270	5,150	10,700
250		72	149	304	531	753	1,610	2,900	4,560	9,510
300		66	135	275	481	682	1,460	2,620	4,140	8,610
350		60	124	253	442	628	1,340	2,410	3,800	7,920
400		56	116	235	411	584	1,250	2,250	3,540	7,370
450		53	109	221	386	548	1,170	2,110	3,320	6,920
500		50	103	209	365	517	1,110	1,990	3,140	6,530
550		47	97	198	346	491	1,050	1,890	2,980	6,210
600		45	93	189	330	469	1,000	1,800	2,840	5,920
650		43	89	181	316	449	959	1,730	2,720	5,670
700		41	86	174	304	431	921	1,660	2,620	5,450
750		40	82	168	293	415	888	1,600	2,520	5,250
800		39	80	162	283	401	857	1,540	2,430	5,070
850		37	77	157	274	388	829	1,490	2,350	4,900
900		36	75	152	265	376	804	1,450	2,280	4,750
950		35	72	147	258	366	781	1,410	2,220	4,620
1,000		34	71	143	251	356	760	1,370	2,160	4,490
1,100		32	67	136	238	338	721	1,300	2,050	4,270
1,200		31	64	130	227	322	688	1,240	1,950	4,070
1,300		30	61	124	217	309	659	1,190	1,870	3,900
1,400		28	59	120	209	296	633	1,140	1,800	3,740
1,500		27	57	115	201	286	610	1,100	1,730	3,610
1,600		26	55	111	194	276	589	1,060	1,670	3,480
1,700		26	53	108	188	267	570	1,030	1,620	3,370
1,800		25	51	104	182	259	553	1,000	1,570	3,270
1,900		24	50	101	177	251	537	966	1,520	3,170
2,000		23	48	99	172	244	522	940	1,480	3,090

For SI: 1 inch = 25.4 mm, 1 foot = 304.8 mm, 1 pound per square inch = 6.895 kPa, 1-inch water column = 0.2488 kPa, 1 British thermal unit per hour = 0.2931 W, 1 cubic foot per hour = 0.0283 m^3/h, 1 degree = 0.01745 rad.

Notes:

1. Table capacities are based on Type K copper tubing inside diameter (shown), which has the smallest inside diameter of the copper tubing products.
2. All table entries have been rounded to three significant digits.

TABLE G2413.4(16) [402.4(32)]
CORRUGATED STAINLESS STEEL TUBING (CSST)

Gas	Undiluted Propane
Inlet Pressure	11.0 in. w.c.
Pressure Drop	0.5 in. w.c.
Specific Gravity	1.50

INTENDED USE: SIZING BETWEEN SINGLE OR SECOND STAGE (Low Pressure) REGULATOR AND THE APPLIANCE SHUTOFF VALVE.														
	TUBE SIZE (EHD)													
Flow Designation	**13**	**15**	**18**	**19**	**23**	**25**	**30**	**31**	**37**	**39**	**46**	**48**	**60**	**62**
Length (ft)	**Capacity in Thousands of Btu per Hour**													
5	72	99	181	211	355	426	744	863	1,420	1,638	2,830	3,270	5,780	6,550
10	50	69	129	150	254	303	521	605	971	1,179	1,990	2,320	4,110	4,640
15	39	55	104	121	208	248	422	490	775	972	1,620	1,900	3,370	3,790
20	34	49	91	106	183	216	365	425	661	847	1,400	1,650	2,930	3,290
25	30	42	82	94	164	192	325	379	583	762	1,250	1,480	2,630	2,940
30	28	39	74	87	151	177	297	344	528	698	1,140	1,350	2,400	2,680
40	23	33	64	74	131	153	256	297	449	610	988	1,170	2,090	2,330
50	20	30	58	66	118	137	227	265	397	548	884	1,050	1,870	2,080
60	19	26	53	60	107	126	207	241	359	502	805	961	1,710	1,900
70	17	25	49	57	99	117	191	222	330	466	745	890	1,590	1,760
80	15	23	45	52	94	109	178	208	307	438	696	833	1,490	1,650
90	15	22	44	50	90	102	169	197	286	414	656	787	1,400	1,550
100	14	20	41	47	85	98	159	186	270	393	621	746	1,330	1,480
150	11	15	31	36	66	75	123	143	217	324	506	611	1,090	1,210
200	9	14	28	33	60	69	112	129	183	283	438	531	948	1,050
250	8	12	25	30	53	61	99	117	163	254	390	476	850	934
300	8	11	23	26	50	57	90	107	147	234	357	434	777	854

For SI: 1 inch = 25.4 mm, 1 foot = 304.8 mm, 1 pound per square inch = 6.895 kPa, 1-inch water column = 0.2488 kPa, 1 British thermal unit per hour = 0.2931 W, 1 cubic foot per hour = 0.0283 m^3/h, 1 degree = 0.01745 rad.

Notes:

1. Table includes losses for four 90-degree bends and two end fittings. Tubing runs with larger numbers of bends or fittings shall be increased by an equivalent length of tubing to the following equation: $L = 1.3n$ where L is additional length (feet) of tubing and n is the number of additional fittings or bends.
2. EHD—Equivalent Hydraulic Diameter, which is a measure of the relative hydraulic efficiency between different tubing sizes. The greater the value of EHD, the greater the gas capacity of the tubing.
3. All table entries have been rounded to three significant digits.

TABLE G2413.4(17) [402.4(33)]
CORRUGATED STAINLESS STEEL TUBING (CSST)

Gas	Undiluted Propane
Inlet Pressure	2.0 psi
Pressure Drop	1.0 psi
Specific Gravity	1.50

INTENDED USE: SIZING BETWEEN 2 PSI SERVICE AND THE LINE PRESSURE REGULATOR.														
	TUBE SIZE (EHD)													
Flow Designation	**13**	**15**	**18**	**19**	**23**	**25**	**30**	**31**	**37**	**39**	**46**	**48**	**60**	**62**
Length (ft)	**Capacity in Thousands of Btu per Hour**													
10	426	558	927	1,110	1,740	2,170	4,100	4,720	7,130	7,958	15,200	16,800	29,400	34,200
25	262	347	591	701	1,120	1,380	2,560	2,950	4,560	5,147	9,550	10,700	18,800	21,700
30	238	316	540	640	1,030	1,270	2,330	2,690	4,180	4,719	8,710	9,790	17,200	19,800
40	203	271	469	554	896	1,100	2,010	2,320	3,630	4,116	7,530	8,500	14,900	17,200
50	181	243	420	496	806	986	1,790	2,070	3,260	3,702	6,730	7,610	13,400	15,400
75	147	196	344	406	663	809	1,460	1,690	2,680	3,053	5,480	6,230	11,000	12,600
80	140	189	333	393	643	768	1,410	1,630	2,590	2,961	5,300	6,040	10,600	12,200
100	124	169	298	350	578	703	1,260	1,450	2,330	2,662	4,740	5,410	9,530	10,900
150	101	137	245	287	477	575	1,020	1,180	1,910	2,195	3,860	4,430	7,810	8,890
200	86	118	213	248	415	501	880	1,020	1,660	1,915	3,340	3,840	6,780	7,710
250	77	105	191	222	373	448	785	910	1,490	1,722	2,980	3,440	6,080	6,900
300	69	96	173	203	343	411	716	829	1,360	1,578	2,720	3,150	5,560	6,300
400	60	82	151	175	298	355	616	716	1,160	1,376	2,350	2,730	4,830	5,460
500	53	72	135	158	268	319	550	638	1,030	1,237	2,100	2,450	4,330	4,880

For SI: 1 inch = 25.4 mm, 1 foot = 304.8 mm, 1 pound per square inch = 6.895 kPa, 1-inch water column = 0.2488 kPa, 1 British thermal unit per hour = 0.2931 W, 1 cubic foot per hour = 0.0283 m^3/h, 1 degree = 0.01745 rad.

Notes:

1. Table does not include effect of pressure drop across the line regulator. Where regulator loss exceeds $^1/_2$ psi (based on 13 in. w.c. outlet pressure), DO NOT USE THIS TABLE. Consult with the regulator manufacturer for pressure drops and capacity factors. Pressure drops across a regulator can vary with flow rate.
2. CAUTION: Capacities shown in the table might exceed maximum capacity for a selected regulator. Consult with the regulator or tubing manufacturer for guidance.
3. Table includes losses for four 90-degree bends and two end fittings. Tubing runs with larger numbers of bends or fittings shall be increased by an equivalent length of tubing to the following equation: $L = 1.3n$ where L is additional length (feet) of tubing and n is the number of additional fittings or bends.
4. EHD—Equivalent Hydraulic Diameter, which is a measure of the relative hydraulic efficiency between different tubing sizes. The greater the value of EHD, the greater the gas capacity of the tubing.
5. All table entries have been rounded to three significant digits.

TABLE G2413.4(18) [402.4(34)]
CORRUGATED STAINLESS STEEL TUBING (CSST)

Gas	Undiluted Propane
Inlet Pressure	5.0 psi
Pressure Drop	3.5 psi
Specific Gravity	1.50

	TUBE SIZE (EHD)													
Flow Designation	**13**	**15**	**18**	**19**	**23**	**25**	**30**	**31**	**37**	**39**	**46**	**48**	**60**	**62**
Length (ft)	**Capacity in Thousands of Btu per Hour**													
10	826	1,070	1,710	2,060	3,150	4,000	7,830	8,950	13,100	14,441	28,600	31,200	54,400	63,800
25	509	664	1,090	1,310	2,040	2,550	4,860	5,600	8,400	9,339	18,000	19,900	34,700	40,400
30	461	603	999	1,190	1,870	2,340	4,430	5,100	7,680	8,564	16,400	18,200	31,700	36,900
40	396	520	867	1,030	1,630	2,030	3,820	4,400	6,680	7,469	14,200	15,800	27,600	32,000
50	352	463	777	926	1,460	1,820	3,410	3,930	5,990	6,717	12,700	14,100	24,700	28,600
75	284	376	637	757	1,210	1,490	2,770	3,190	4,920	5,539	10,300	11,600	20,300	23,400
80	275	363	618	731	1,170	1,450	2,680	3,090	4,770	5,372	9,990	11,200	19,600	22,700
100	243	324	553	656	1,050	1,300	2,390	2,760	4,280	4,830	8,930	10,000	17,600	20,300
150	196	262	453	535	866	1,060	1,940	2,240	3,510	3,983	7,270	8,210	14,400	16,600
200	169	226	393	464	755	923	1,680	1,930	3,050	3,474	6,290	7,130	12,500	14,400
250	150	202	352	415	679	828	1,490	1,730	2,740	3,124	5,620	6,390	11,200	12,900
300	136	183	322	379	622	757	1,360	1,570	2,510	2,865	5,120	5,840	10,300	11,700
400	117	158	279	328	542	657	1,170	1,360	2,180	2,498	4,430	5,070	8,920	10,200
500	104	140	251	294	488	589	1,050	1,210	1,950	2,247	3,960	4,540	8,000	9,110

For SI: 1 inch = 25.4 mm, 1 foot = 304.8 mm, 1 pound per square inch = 6.895 kPa, 1-inch water column = 0.2488 kPa, 1 British thermal unit per hour = 0.2931 W, 1 cubic foot per hour = 0.0283 m^3/h, 1 degree = 0.01745 rad.

Notes:

1. Table does not include effect of pressure drop across line regulator. Where regulator loss exceeds1 psi, DO NOT USE THIS TABLE. Consult with the regulator manufacturer for pressure drops and capacity factors. Pressure drop across regulator can vary with the flow rate.
2. CAUTION: Capacities shown in the table might exceed maximum capacity of selected regulator. Consult with the tubing manufacturer for guidance.
3. Table includes losses for four 90-degree bends and two end fittings. Tubing runs with larger numbers of bends or fittings shall be increased by an equivalent length of tubing to the following equation: $L = 1.3n$ where L is additional length (feet) of tubing and n is the number of additional fittings or bends.
4. EHD—Equivalent Hydraulic Diameter, which is a measure of the relative hydraulic efficiency between different tubing sizes. The greater the value of EHD, the greater the gas capacity of the tubing.
5. All table entries have been rounded to three significant digits.

TABLE G2413.4(19) [402.4(35)]
POLYETHYLENE PLASTIC PIPE

Gas	Undiluted Propane
Inlet Pressure	11.0 in. w.c.
Pressure Drop	0.5 in. w.c.
Specific Gravity	1.50

INTENDED USE	PE pipe sizing between integral 2-stage regulator at tank or second stage (low-pressure regulator) and building.					
	PIPE SIZE (inches)					
Nominal OD	1/2	3/4	1	1 1/4	1 1/2	2
Designation	SDR 9	SDR 11	SDR 11	SDR 10	SDR 11	SDR 11
Actual ID	0.660	0.860	1.077	1.328	1.554	1.943
Length (ft)	Capacity in Thousands of Btu per Hour					
10	340	680	1,230	2,130	3,210	5,770
20	233	468	844	1,460	2,210	3,970
30	187	375	677	1,170	1,770	3,180
40	160	321	580	1,000	1,520	2,730
50	142	285	514	890	1,340	2,420
60	129	258	466	807	1,220	2,190
70	119	237	428	742	1,120	2,010
80	110	221	398	690	1,040	1,870
90	103	207	374	648	978	1,760
100	98	196	353	612	924	1,660
125	87	173	313	542	819	1,470
150	78	157	284	491	742	1,330
175	72	145	261	452	683	1,230
200	67	135	243	420	635	1,140
250	60	119	215	373	563	1,010
300	54	108	195	338	510	916
350	50	99	179	311	469	843
400	46	92	167	289	436	784
450	43	87	157	271	409	736
500	41	82	148	256	387	695

For SI: 1 inch = 25.4 mm, 1 foot = 304.8 mm, 1 pound per square inch = 6.895 kPa, 1-inch water column = 0.2488 kPa, 1 British thermal unit per hour = 0.2931 W, 1 cubic foot per hour = 0.0283 m^3/h, 1 degree = 0.01745 rad.

Note: All table entries have been rounded to three significant digits.

3015

TABLE G2413.4(20) [402.4(36)]
POLYETHYLENE PLASTIC PIPE

Gas	Undiluted Propane
Inlet Pressure	2.0 psi
Pressure Drop	1.0 psi
Specific Gravity	1.50

INTENDED USE	**PE pipe sizing between 2 psig service regulator and line pressure regulator.**					
	PIPE SIZE (inches)					
Nominal OD	**1/2**	**3/4**	**1**	**1 1/4**	**1 1/2**	**2**
Designation	**SDR 9**	**SDR 11**	**SDR 11**	**SDR 10**	**SDR 11**	**SDR 11**
Actual ID	**0.660**	**0.860**	**1.077**	**1.328**	**1.554**	**1.943**
Length (ft)	**Capacity in Thousands of Btu per Hour**					
10	3,130	6,260	11,300	19,600	29,500	53,100
20	2,150	4,300	7,760	13,400	20,300	36,500
30	1,730	3,450	6,230	10,800	16,300	29,300
40	1,480	2,960	5,330	9,240	14,000	25,100
50	1,310	2,620	4,730	8,190	12,400	22,200
60	1,190	2,370	4,280	7,420	11,200	20,100
70	1,090	2,180	3,940	6,830	10,300	18,500
80	1,010	2,030	3,670	6,350	9,590	17,200
90	952	1,910	3,440	5,960	9,000	16,200
100	899	1,800	3,250	5,630	8,500	15,300
125	797	1,600	2,880	4,990	7,530	13,500
150	722	1,450	2,610	4,520	6,830	12,300
175	664	1,330	2,400	4,160	6,280	11,300
200	618	1,240	2,230	3,870	5,840	10,500
250	548	1,100	1,980	3,430	5,180	9,300
300	496	994	1,790	3,110	4,690	8,430
350	457	914	1,650	2,860	4,320	7,760
400	425	851	1,530	2,660	4,020	7,220
450	399	798	1,440	2,500	3,770	6,770
500	377	754	1,360	2,360	3,560	6,390
550	358	716	1,290	2,240	3,380	6,070
600	341	683	1,230	2,140	3,220	5,790
650	327	654	1,180	2,040	3,090	5,550
700	314	628	1,130	1,960	2,970	5,330
750	302	605	1,090	1,890	2,860	5,140
800	292	585	1,050	1,830	2,760	4,960
850	283	566	1,020	1,770	2,670	4,800
900	274	549	990	1,710	2,590	4,650
950	266	533	961	1,670	2,520	4,520
1,000	259	518	935	1,620	2,450	4,400
1,100	246	492	888	1,540	2,320	4,170
1,200	234	470	847	1,470	2,220	3,980
1,300	225	450	811	1,410	2,120	3,810
1,400	216	432	779	1,350	2,040	3,660
1,500	208	416	751	1,300	1,960	3,530
1,600	201	402	725	1,260	1,900	3,410
1,700	194	389	702	1,220	1,840	3,300
1,800	188	377	680	1,180	1,780	3,200
1,900	183	366	661	1,140	1,730	3,110
2,000	178	356	643	1,110	1,680	3,020

For SI: 1 inch = 25.4 mm, 1 foot = 304.8 mm, 1 pound per square inch = 6.895 kPa, 1-inch water column = 0.2488 kPa, 1 British thermal unit per hour = 0.2931 W, 1 cubic foot per hour = 0.0283 m^3/h, 1 degree = 0.01745 rad.

Note: All table entries have been rounded to three significant digits.

TABLE G2413.4(21) [402.4(37)]
POLYETHYLENE PLASTIC TUBING

Gas	Undiluted Propane
Inlet Pressure	11.0 in. w.c.
Pressure Drop	0.5 in. w.c.
Specific Gravity	1.50

INTENDED USE: PE PIPE SIZING BETWEEN INTEGRAL 2-STAGE REGULATOR AT TANK OR SECOND STAGE (low-pressure regulator) AND BUILDING.		
Plastic Tubing Size (CTS) (inch)		
Nominal OD	**1/2**	**1**
Designation	**SDR 7**	**SDR 11**
Actual ID	**0.445**	**0.927**
Length (ft)	**Capacity in Cubic Feet of Gas per Hour**	
10	121	828
20	83	569
30	67	457
40	57	391
50	51	347
60	46	314
70	42	289
80	39	269
90	37	252
100	35	238
125	31	211
150	28	191
175	26	176
200	24	164
225	22	154
250	21	145
275	20	138
300	19	132
350	18	121
400	16	113
450	15	106
500	15	100

For SI: 1 inch = 25.4 mm, 1 foot = 304.8 mm, 1 pound per square inch = 6.895 kPa, 1-inch water column = 0.2488 kPa, 1 British thermal unit per hour = 0.2931 W, 1 cubic foot per hour = 0.0283 m^3/h, 1 degree = 0.01745 rad.

Note: All table entries have been rounded to three significant digits.

SECTION G2414 (403) PIPING MATERIALS

G2414.1 (403.1) General. Materials used for *piping systems* shall comply with the requirements of this chapter or shall be *approved.*

G2414.2 (403.2) Used materials. *Pipe*, fittings, *valves* or other materials shall not be used again unless they are free of foreign materials and have been ascertained to be adequate for the service intended.

G2414.3 (403.3) Other materials. Material not covered by the standards specifications listed herein shall be investigated and tested to determine that it is safe and suitable for the proposed service, and, in addition, shall be recommended for that service by the manufacturer and shall be *approved* by the *code official.*

G2414.4 (403.4) Metallic pipe. Metallic *pipe* shall comply with Sections G2414.4.1 and G2414.4.2.

G2414.4.1 (403.4.1) Cast iron. Cast-iron *pipe* shall not be used.

G2414.4.2 (403.4.2) Steel. Steel and wrought-iron *pipe* shall be at least of standard weight (Schedule 40) and shall comply with one of the following standards:

1. ASME B 36.10, 10M.
2. ASTM A 53/A 53M.
3. ASTM A 106.

G2414.5 (403.5) Metallic tubing. Seamless copper, aluminum alloy and steel *tubing* shall not be used with gases corrosive to such materials.

G2414.5.1 (403.5.1) Steel tubing. Steel *tubing* shall comply with ASTM A 254.

G2414.5.2 (403.5.2) Copper copper alloy tubing. Copper *tubing* shall comply with Standard Type K or L of ASTM B 88 or ASTM B 280.

Copper and copper alloy *tubing* shall not be used if the gas contains more than an average of 0.3 grains of hydrogen sulfide per 100 standard cubic feet of gas (0.7 milligrams per 100 liters).

G2414.5.3 (403.5.4) Corrugated stainless steel tubing. Corrugated stainless steel *tubing* shall be *listed* in accordance with ANSI LC 1/CSA 6.26.

G2414.6 (403.6) Plastic pipe, tubing and fittings. Polyethylene plastic pipe, tubing and fittings used to supply fuel gas shall conform to ASTM D 2513. Such pipe shall be marked "Gas" and "ASTM D 2513."

Plastic pipe, tubing and fittings, other than polyethylene, shall be identified and conform to the 2008 edition of ASTM D 2513. Such pipe shall be marked "Gas" and "ASTM D 2513."

Polyvinyl chloride (PVC) and chlorinated polyvinyl chloride (CPVC) plastic pipe, tubing and fittings shall not be used to supply fuel gas.

G2414.6.1 (403.6.1) Anodeless risers. Plastic pipe, tubing and anodeless risers shall comply with the following:

1. Factory-assembled anodeless risers shall be recommended by the manufacturer for the gas used and shall be leak tested by the manufacturer in accordance with written procedures.
2. Service head adapters and field-assembled anodeless risers incorporating service head adapters shall be recommended by the manufacturer for the gas used, and shall be designed and certified to meet the requirements of Category I of ASTM D 2513, and U.S. Department of Transportation, Code of Federal Regulations, Title 49, Part 192.281(e). The manufacturer shall provide the user with qualified installation instructions as prescribed by the U.S. Department of Transportation, Code of Federal Regulations, Title 49, Part 192.283(b).

G2414.6.2 (403.6.2) LP-gas systems. The use of plastic pipe, tubing and fittings in undiluted liquefied petroleum gas *piping* systems shall be in accordance with NFPA 58.

G2414.6.3 (403.6.3) Regulator vent piping. Plastic pipe and fittings used to connect *regulator* vents to remote vent terminations shall be of PVC conforming to ANSI/UL 651. PVC vent *piping* shall not be installed indoors.

G2414.7 (403.7) Workmanship and defects. *Pipe, tubing* and fittings shall be clear and free from cutting burrs and defects in structure or threading, and shall be thoroughly brushed, and chip and scale blown.

Defects in *pipe* or *tubing* or fittings shall not be repaired. Defective *pipe*, *tubing* or fittings shall be replaced. (See Section G2417.1.2.)

G2414.8 (403.8) Protective coating. Where in contact with material or atmosphere exerting a corrosive action, metallic *piping* and fittings coated with a corrosion-resistant material shall be used. External or internal coatings or linings used on *piping* or components shall not be considered as adding strength.

G2414.9 (403.9) Metallic pipe threads. Metallic *pipe* and fitting threads shall be taper *pipe* threads and shall comply with ASME B 1.20.1.

G2414.9.1 (403.9.1) Damaged threads. *Pipe* with threads that are stripped, chipped, corroded or otherwise damaged shall not be used. Where a weld opens during the operation of cutting or threading, that portion of the *pipe* shall not be used.

G2414.9.2 (403.9.2) Number of threads. Field threading of metallic *pipe* shall be in accordance with Table G2414.9.2.

TABLE G2414.9.2 (403.9.2)
SPECIFICATIONS FOR THREADING METALLIC PIPE

IRON PIPE SIZE (inches)	APPROXIMATE LENGTH OF THREADED PORTION (inches)	APPROXIMATE NO. OF THREADS TO BE CUT
$^1/_2$	$^3/_4$	10
$^3/_4$	$^3/_4$	10
1	$^7/_8$	10
$1^1/_4$	1	11
$1^1/_2$	1	11

For SI: 1 inch = 25.4 mm.

G2414.9.3 (403.9.3) Thread joint compounds. Thread joint compounds shall be resistant to the action of liquefied petroleum gas or to any other chemical constituents of the gases to be conducted through the *piping*.

G2414.10 (403.10) Metallic piping joints and fittings. The type of *piping* joint used shall be suitable for the pressure-temperature conditions and shall be selected giving consideration to joint tightness and mechanical strength under the service conditions. The joint shall be able to sustain the maximum end force caused by the internal pressure and any additional forces due to temperature expansion or contraction, vibration, fatigue, or to the weight of the *pipe* and its contents.

G2414.10.1 (403.10.1) Pipe joints. *Pipe* joints shall be threaded, flanged, brazed or welded. Where nonferrous *pipe* is brazed, the *brazing* materials shall have a melting point in excess of 1,000°F (538°C). *Brazing* alloys shall not contain more than 0.05-percent phosphorus.

G2414.10.2 (403.10.2) Tubing joints. *Tubing* joints shall be made with *approved gas tubing* fittings or be brazed with a material having a melting point in excess of 1,000°F (538°C) or made with press-connect fittings complying with ANSI LC-4. *Brazing alloys* shall not contain more than 0.05-percent phosphorus.

G2414.10.3 (403.10.3) Flared joints. *Flared joints* shall be used only in systems constructed from nonferrous *pipe* and *tubing* where experience or tests have demonstrated that the joint is suitable for the conditions and where provisions are made in the design to prevent separation of the joints.

G2414.10.4 (403.10.4) Metallic fittings. Metallic fittings, shall comply with the following:

1. Fittings used with steel or wrought-iron *pipe* shall be steel, copper alloy, malleable iron or cast iron.
2. Fittings used with copper or copper alloy *pipe* shall be copper or copper alloy.
3. Cast-iron bushings shall be prohibited.
4. Special fittings. Fittings such as couplings, proprietary-type joints, saddle tees, gland-type compression fittings, and flared, flareless and compression-type *tubing* fittings shall be: used within the fitting manufacturer's pressure-temperature recommendations; used within the service conditions anticipated with respect to vibration, fatigue, thermal expansion and contraction; and shall be *approved*.
5. Where pipe fittings are drilled and tapped in the field, the operation shall be in accordance with all of the following:
   - 5.1. The operation shall be performed on systems having operating pressures of 5 psi (34.5 kPa) or less.
   - 5.2. The operation shall be performed by the gas supplier or the gas supplier's designated representative.
   - 5.3. The drilling and tapping operation shall be performed in accordance with written procedures prepared by the gas supplier.
   - 5.4. The fittings shall be located outdoors.
   - 5.5. The tapped fitting assembly shall be inspected and proven to be free of leakage.

G2414.11 (403.11) Plastic piping, joints and fittings. Plastic *pipe, tubing* and fittings shall be joined in accordance with the manufacturers' instructions. Such joints shall comply with the following:

1. The joints shall be designed and installed so that the longitudinal pull-out resistance of the joints will be at least equal to the tensile strength of the plastic *piping* material.
2. Heat-fusion joints shall be made in accordance with qualified procedures that have been established and proven by test to produce gas-tight joints at least as strong as the *pipe* or *tubing* being joined. Joints shall be made with the joining method recommended by the *pipe* manufacturer. Heat fusion fittings shall be marked "ASTM D 2513."
3. Where compression-type *mechanical joints* are used, the gasket material in the fitting shall be compatible with the plastic *piping* and with the gas distributed by the system. An internal tubular rigid stiffener shall be used in conjunction with the fitting. The stiffener shall be flush with the end of the *pipe* or *tubing* and shall extend at least to the outside end of the compression fitting when installed. The stiffener shall be free of rough or sharp edges and shall not be a force fit in the plastic. Split tubular stiffeners shall not be used.
4. Plastic *piping* joints and fittings for use in *liquefied petroleum gas piping systems* shall be in accordance with NFPA 58.

SECTION G2415 (404) PIPING SYSTEM INSTALLATION

G2415.1 (404.1) Installation of materials. Materials used shall be installed in strict accordance with the standards under which the materials are accepted and approved. In the absence of such installation procedures, the manufacturer's instructions shall be followed. Where the requirements of referenced standards or manufacturer's instructions do not conform to minimum provisions of this code, the provisions of this code shall apply.

G2415.2 (404.2) CSST. CSST piping systems shall be installed in accordance with the terms of their approval, the conditions of listing, the manufacturer's instructions and this code.

G2415.3 (404.3) Prohibited locations. *Piping* shall not be installed in or through a ducted supply, return or exhaust, or a clothes chute, *chimney* or gas vent, dumbwaiter or elevator shaft. *Piping* installed downstream of the *point of delivery* shall not extend through any townhouse unit other than the unit served by such *piping*.

G2415.4 (404.4) Piping in solid partitions and walls. *Concealed piping* shall not be located in solid partitions and solid walls, unless installed in a chase or casing.

G2415.5 (404.5) Fittings in concealed locations. Fittings installed in concealed locations shall be limited to the following types:

1. Threaded elbows, tees and couplings.
2. Brazed fittings.
3. Welded fittings.
4. Fittings *listed* to ANSI LC-1/CSA 6.26 or ANSI LC-4.

G2415.6 (404.6) Underground penetrations prohibited. Gas *piping* shall not penetrate building foundation walls at any point below grade. Gas *piping* shall enter and exit a building at a point above grade and the annular space between the *pipe* and the wall shall be sealed.

G2415.7 (404.7) Protection against physical damage. Where *piping* will be concealed within light-frame construction assemblies, the *piping* shall be protected against penetration by fasteners in accordance with Sections G2415.7.1 through G2415.7.3.

Exception: Black steel *piping* and galvanized steel *piping* shall not be required to be protected.

G2415.7.1 (404.7.1) Piping through bored holes or notches. Where *piping* is installed through holes or notches in framing members and the *piping* is located less than $1^1/_2$ inches (38 mm) from the framing member face to which wall, ceiling or floor membranes will be attached, the pipe shall be protected by shield plates that cover the width of the pipe and the framing member and that extend not less than 4 inches (51 mm) to each side of the framing member. Where the framing member that the *piping* passes through is a bottom plate, bottom track, top plate or top track, the shield plates shall cover the framing member and extend not less than 4 inches (51 mm) above the bottom framing member and not less than 4 inches (51 mm) below the top framing member.

G2415.7.2 (404.7.2) Piping installed in other locations. Where the *piping* is located within a framing member and is less than $1^1/_2$ inches (38 mm) from the framing member face to which wall, ceiling or floor membranes will be attached, the *piping* shall be protected by shield plates that cover the width and length of the *piping*. Where the *piping* is located outside of a framing member and is located less than $1^1/_2$ inches (38 mm) from the nearest edge of the face of the framing member to which the membrane will be attached, the *piping* shall be protected by shield plates that cover the width and length of the *piping*.

2415.7.3 (404.7.3) Shield plates. Shield plates shall be of steel material having a thickness of not less than 0.0575 inch (1.463 mm) (No. 16 gage).

G2415.8 (404.8) Piping in solid floors. *Piping* in solid floors shall be laid in channels in the floor and covered in a manner that will allow access to the *piping* with a minimum amount of damage to the building. Where such *piping* is subject to exposure to excessive moisture or corrosive substances, the *piping* shall be protected in an *approved* manner. As an alternative to installation in channels, the *piping* shall be installed in a conduit of Schedule 40 steel, wrought iron, PVC or ABS pipe in accordance with Section G2415.6.1 or G2415.6.2.

G2415.8.1 (404.8.1) Conduit with one end terminating outdoors. The conduit shall extend into an occupiable portion of the building and, at the point where the conduit terminates in the building, the space between the conduit and the *gas piping* shall be sealed to prevent the possible entrance of any gas leakage. The conduit shall extend not less than 2 inches (51 mm) beyond the point where the *pipe* emerges from the floor. If the end sealing is capable of withstanding the full pressure of the gas *pipe*, the conduit shall be designed for the same pressure as the *pipe*. Such conduit shall extend not less than 4 inches (102 mm) outside the building, shall be vented above grade to the outdoors and shall be installed to prevent the entrance of water and insects.

G2415.8.2 (404.8.2) Conduit with both ends terminating indoors. Where the conduit originates and terminates within the same building, the conduit shall originate and terminate in an accessible portion of the building and shall not be sealed. The conduit shall extend not less than 2 inches (51 mm) beyond the point where the pipe emerges from the floor.

G2415.9 (404.9) Above-ground piping outdoors. *Piping* installed outdoors shall be elevated not less than $3^1/_2$ inches (152 mm) above ground and where installed across roof surfaces, shall be elevated not less than $3^1/_2$ inches (152 mm) above the roof surface. *Piping* installed above ground, outdoors, and installed across the surface of roofs shall be securely supported and located where it will be protected from physical damage. Where passing through an outside wall, the *piping* shall also be protected against corrosion by coating or wrapping with an inert material. Where *piping* is encased in a protective pipe sleeve, the annular space between the *piping* and the sleeve shall be sealed.

G2415.10 (404.10) Isolation. Metallic *piping* and metallic *tubing* that conveys *fuel gas* from an LP-gas storage container shall be provided with an *approved* dielectric fitting to electrically isolate the underground portion of the pipe or tube from the above ground portion that enters a building. Such dielectric fitting shall be installed above ground outdoors.

G2415.11 (404.11) Protection against corrosion. Metallic pipe or *tubing* exposed to corrosive action, such as soil condition or moisture, shall be protected in an *approved* manner. Zinc coatings (galvanizing) shall not be deemed adequate protection for *gas piping* underground. Where dissimilar metals are joined underground, an insulating coupling or fitting shall be used. *Piping* shall not be laid in contact with cinders.

G2415.11.1 (404.11.1) Prohibited use. Uncoated threaded or socket-welded joints shall not be used in *piping* in contact with soil or where internal or external crevice corrosion is known to occur.

G2415.11.2 (404.11.2) Protective coatings and wrapping. Pipe protective coatings and wrappings shall be *approved* for the application and shall be factory applied.

Exception: Where installed in accordance with the manufacturer's instructions, field application of coat-

ings and wrappings shall be permitted for pipe nipples, fittings and locations where the factory coating or wrapping has been damaged or necessarily removed at joints.

G2415.12 (404.12) Minimum burial depth. Underground *piping systems* shall be installed a minimum depth of 12 inches (305 mm) below grade, except as provided for in Section G2415.12.1.

G2415.12.1 (404.12.1) Individual outside appliances. Individual lines to outdoor lights, grills or other *appliances* shall be installed not less than 8 inches (203 mm) below finished grade, provided that such installation is *approved* and is installed in locations not susceptible to physical damage.

G2415.13 (404.13) Trenches. The trench shall be graded so that the pipe has a firm, substantially continuous bearing on the bottom of the trench.

G2415.14 (404.14) Piping underground beneath buildings. *Piping* installed underground beneath buildings is prohibited except where the *piping* is encased in a conduit of wrought iron, plastic pipe, steel pipe or other *approved* conduit material designed to withstand the superimposed loads. The conduit shall be protected from corrosion in accordance with Section G2415.11 and shall be installed in accordance with Section G2415.14.1 or G2415.14.2.

G2415.14.1 (404.14.1) Conduit with one end terminating outdoors. The conduit shall extend into an occupiable portion of the building and, at the point where the conduit terminates in the building, the space between the conduit and the *gas piping* shall be sealed to prevent the possible entrance of any gas leakage. The conduit shall extend not less than 2 inches (51 mm) beyond the point where the *pipe* emerges from the floor. Where the end sealing is capable of withstanding the full pressure of the gas pipe, the conduit shall be designed for the same pressure as the pipe. Such conduit shall extend not less than 4 inches (102 mm) outside the building, shall be vented above grade to the outdoors and shall be installed so as to prevent the entrance of water and insects.

G2415.14.2 (404.14.2) Conduit with both ends terminating indoors. Where the conduit originates and terminates within the same building, the conduit shall originate and terminate in an accessible portion of the building and shall not be sealed. The conduit shall extend not less than 2 inches (51 mm) beyond the point where the pipe emerges from the floor.

G2415.15 (404.15) Outlet closures. Gas *outlets* that do not connect to *appliances* shall be capped gas tight.

Exception: *Listed* and *labeled* flush-mounted-type quick-disconnect devices and *listed* and *labeled gas convenience outlets* shall be installed in accordance with the manufacturer's instructions.

G2415.16 (404.16) Location of outlets. The unthreaded portion of *piping outlets* shall extend not less than 1 inch (25 mm) through finished ceilings and walls and where extending through floors, outdoor patios and slabs, shall not be less than 2 inches (51 mm) above them. The *outlet* fitting or *piping* shall be securely supported. *Outlets* shall not be placed behind doors. *Outlets* shall be located in the room or space where the *appliance* is installed.

Exception: *Listed* and *labeled* flush-mounted-type quick-disconnect devices and *listed* and *labeled gas convenience outlets* shall be installed in accordance with the manufacturer's instructions.

G2415.17 (404.17) Plastic pipe. The installation of plastic *pipe* shall comply with Sections G2415.17.1 through G2415.17.3.

G2415.17.1 (404.17.1) Limitations. Plastic pipe shall be installed outdoors underground only. Plastic pipe shall not be used within or under any building or slab or be operated at pressures greater than 100 psig (689 kPa) for natural gas or 30 psig (207 kPa) for LP-gas.

Exceptions:

1. Plastic pipe shall be permitted to terminate above ground outside of buildings where installed in premanufactured *anodeless risers* or service head adapter risers that are installed in accordance with the manufacturer's instructions.
2. Plastic pipe shall be permitted to terminate with a wall head adapter within buildings where the plastic pipe is inserted in a *piping* material for *fuel gas* use in buildings.
3. Plastic pipe shall be permitted under outdoor patio, walkway and driveway slabs provided that the burial depth complies with Section G2415.10.

G2415.17.2 (404.17.2) Connections. Connections outdoors and underground between metallic and plastic *piping* shall be made only with transition fittings conforming to ASTM D 2513 Category I or ASTM F 1973.

G2415.17.3 (404.17.3) Tracer. A yellow insulated copper tracer wire or other *approved* conductor shall be installed adjacent to underground nonmetallic *piping*. *Access* shall be provided to the tracer wire or the tracer wire shall terminate above ground at each end of the nonmetallic *piping*. The tracer wire size shall not be less than 18 AWG and the insulation type shall be suitable for direct burial.

G2415.18 (404.18) Pipe cleaning. The use of a flammable or combustible gas to clean or remove debris from a *piping* system shall be prohibited.

G2415.19 (404.19) Prohibited devices. A device shall not be placed inside the *piping* or fittings that will reduce the cross-sectional area or otherwise obstruct the free flow of gas.

Exceptions:

1. Approved gas filters.
2. An approved fitting or device where the gas piping system has been sized to accommodate the pressure drop of the fitting or device.

G2415.20 (404.20) Testing of piping. Before any system of *piping* is put in service or concealed, it shall be tested to ensure that it is gas tight. Testing, inspection and purging of *piping systems* shall comply with Section G2417.

SECTION G2416 (405)
PIPING BENDS AND CHANGES IN DIRECTION

G2416.1 (405.1) General. Changes in direction of pipe shall be permitted to be made by the use of fittings, factory bends or field bends.

G2416.2 (405.2) Metallic pipe. Metallic pipe bends shall comply with the following:

1. Bends shall be made only with bending tools and procedures intended for that purpose.
2. All bends shall be smooth and free from buckling, cracks or other evidence of mechanical damage.
3. The longitudinal weld of the pipe shall be near the neutral axis of the bend.
4. Pipe shall not be bent through an arc of more than 90 degrees (1.6 rad).
5. The inside radius of a bend shall be not less than six times the outside diameter of the pipe.

G2416.3 (405.3) Plastic pipe. Plastic pipe bends shall comply with the following:

1. The pipe shall not be damaged and the internal diameter of the pipe shall not be effectively reduced.
2. Joints shall not be located in pipe bends.
3. The radius of the inner curve of such bends shall not be less than 25 times the inside diameter of the pipe.
4. Where the *piping* manufacturer specifies the use of special bending tools or procedures, such tools or procedures shall be used.

SECTION G2417 (406)
INSPECTION, TESTING AND PURGING

G2417.1 (406.1) General. Prior to acceptance and initial operation, all *piping* installations shall be visually inspected and pressure tested to determine that the materials, design, fabrication and installation practices comply with the requirements of this code.

G2417.1.1 (406.1.1) Inspections. Inspection shall consist of visual examination, during or after manufacture, fabrication, assembly or *pressure tests*.

G2417.1.2 (406.1.2) Repairs and additions. In the event repairs or additions are made after the *pressure test*, the affected *piping* shall be tested.

Minor repairs and additions are not required to be *pressure tested* provided that the work is inspected and connections are tested with a noncorrosive leak-detecting fluid or other *approved* leak-detecting methods.

G2417.1.3 (406.1.3) New branches. Where new branches are installed to new *appliances*, only the newly installed branches shall be required to be *pressure tested*. Connections between the new *piping* and the existing *piping* shall be tested with a noncorrosive leak-detecting fluid or other *approved* leak-detecting methods.

G2417.1.4 (406.1.4) Section testing. A *piping system* shall be permitted to be tested as a complete unit or in sections. Under no circumstances shall a *valve* in a line be used as a bulkhead between gas in one section of the *piping system* and test medium in an adjacent section, except where a double block and bleed valve system is installed. A valve shall not be subjected to the test pressure unless it can be determined that the valve, including the valve closing mechanism, is designed to safely withstand the test pressure.

G2417.1.5 (406.1.5) Regulators and valve assemblies. *Regulator* and valve assemblies fabricated independently of the *piping system* in which they are to be installed shall be permitted to be tested with inert gas or air at the time of fabrication.

G2417.1.6 (406.1.6) Pipe clearing. Prior to testing, the interior of the pipe shall be cleared of all foreign material.

G2417.2 (406.2) Test medium. The test medium shall be air, nitrogen, carbon dioxide or an inert gas. Oxygen shall not be used.

G2417.3 (406.3) Test preparation. *Pipe* joints, including welds, shall be left exposed for examination during the test.

Exception: Covered or *concealed pipe* end joints that have been previously tested in accordance with this *code*.

G2417.3.1 (406.3.1) Expansion joints. Expansion joints shall be provided with temporary restraints, if required, for the additional thrust load under test.

G2417.3.2 (406.3.2) Appliance and equipment isolation. *Appliances* and *equipment* that are not to be included in the test shall be either disconnected from the *piping* or isolated by blanks, blind flanges or caps.

G2417.3.3 (406.3.3) Appliance and equipment disconnection. Where the *piping system* is connected to *appliances* or *equipment* designed for operating pressures of less than the test pressure, such *appliances* or *equipment* shall be isolated from the *piping system* by disconnecting them and capping the *outlet(s)*.

G2417.3.4 (406.3.4) Valve isolation. Where the *piping system* is connected to *appliances* or *equipment* designed for operating pressures equal to or greater than the test pressure, such *appliances* or *equipment* shall be isolated from the *piping system* by closing the individual *appliance* or *equipment* shutoff valve(s).

G2417.3.5 (406.3.5) Testing precautions. Testing of *piping* systems shall be performed in a manner that protects the safety of employees and the public during the test.

G2417.4 (406.4) Test pressure measurement. Test pressure shall be measured with a manometer or with a pressure-measuring device designed and calibrated to read, record, or indicate a pressure loss caused by leakage during the *pressure test* period. The source of pressure shall be isolated before the *pressure tests* are made. Mechanical gauges used to measure test pressures shall have a range such that the highest end of the scale is not greater than five times the test pressure.

G2417.4.1 (406.4.1) Test pressure. The test pressure to be used shall be not less than $1^1/_2$ times the proposed maximum working pressure, but not less than 3 psig (20 kPa gauge), irrespective of design pressure. Where the test

pressure exceeds 125 psig (862 kPa gauge), the test pressure shall not exceed a value that produces a hoop stress in the *piping* greater than 50 percent of the specified minimum yield strength of the pipe.

G2417.4.2 (406.4.2) Test duration. The test duration shall be not less than 10 minutes.

G2417.5 (406.5) Detection of leaks and defects. The *piping system* shall withstand the test pressure specified without showing any evidence of leakage or other defects. Any reduction of test pressures as indicated by pressure gauges shall be deemed to indicate the presence of a leak unless such reduction can be readily attributed to some other cause.

G2417.5.1 (406.5.1) Detection methods. The leakage shall be located by means of an *approved* gas detector, a noncorrosive leak detection fluid or other *approved* leak detection methods.

G2417.5.2 (406.5.2) Corrections. Where leakage or other defects are located, the affected portion of the *piping system* shall be repaired or replaced and retested.

G2417.6 (406.6) Piping system and equipment leakage check. Leakage checking of systems and *equipment* shall be in accordance with Sections G2417.6.1 through G2417.6.4.

G2417.6.1 (406.6.1) Test gases. Leak checks using fuel gas shall be permitted in *piping systems* that have been pressure tested in accordance with Section G2417.

G2417.6.2 (406.6.2) Before turning gas on. During the process of turning gas on into a system of new *gas piping*, the entire system shall be inspected to determine that there are no open fittings or ends and that all *valves* at unused outlets are closed and plugged or capped.

G2417.6.3 (406.6.3) Leak check. Immediately after the gas is turned on into a new system or into a system that has been initially restored after an interruption of service, the *piping system* shall be checked for leakage. Where leakage is indicated, the gas supply shall be shut off until the necessary repairs have been made.

G2417.6.4 (406.6.4) Placing appliances and equipment in operation. *Appliances* and *equipment* shall not be placed in operation until after the *piping* system has been checked for leakage in accordance with Section G2417.6.3, the *piping system* has been purged in accordance with Section G2417.7 and the connections to the *appliances* have been checked for leakage.

G2417.7 (406.7) Purging. The purging of piping shall be in accordance with Sections G2417.7.1 through 2417.7.3.

G2417.7.1 (406.7.1) Piping systems required to be purged outdoors. The purging of piping systems shall be in accordance with the provisions of Sections G2417.7.1.1 through G2417.7.1.4 where the *piping system* meets either of the following:

1. The design operating gas pressure is greater than 2 psig (13.79 kPa).
2. The piping being purged contains one or more sections of pipe or tubing meeting the size and length criteria of Table G2417.7.1.1.

G2417.7.1.1 (406.7.1.1) Removal from service. Where existing gas piping is opened, the section that is opened shall be isolated from the gas supply and the line pressure vented in accordance with Section G2417.7.1.3. Where gas *piping* meeting the criteria of Table G2417.7.1.1 is removed from service, the residual fuel gas in the *piping* shall be displaced with an inert gas.

TABLE G2417.7.1.1 (406.7.1.1)
SIZE AND LENGTH OF PIPING

NOMINAL PIPE SIZE (inches)[a]	LENGTH OF PIPING (feet)
$\geq 2^1/_2 < 3$	> 50
$\geq 3 < 4$	> 30
$\geq 4 < 6$	> 15
$\geq 6 < 8$	> 10
≥ 8	Any length

For SI: 1 inch = 25.4 mm, 1 foot = 304.8 mm.

a. CSST EHD size of 62 is equivalent to nominal 2-inch pipe or tubing size.

G2417.7.1.2 (406.7.1.2) Placing in operation. Where gas *piping* containing air and meeting the criteria of Table G2417.7.1.1 is placed in operation, the air in the *piping* shall first be displaced with an inert gas. The inert gas shall then be displaced with fuel gas in accordance with Section G2417.7.1.3.

G2417.7.1.3 (406.7.1.3) Outdoor discharge of purged gases. The open end of a *piping* system being pressure vented or purged shall discharge directly to an outdoor location. Purging operations shall comply will all of the following requirements:

1. The point of discharge shall be controlled with a shutoff valve.
2. The point of discharge shall be located not less than 10 feet (3048 mm) from sources of ignition, not less than 10 feet (3048 mm) from building openings and not less than 25 feet (7620 mm) from mechanical air intake openings.
3. During discharge, the open point of discharge shall be continuously attended and monitored with a combustible gas indicator that complies with Section G2417.7.1.4.
4. Purging operations introducing fuel gas shall be stopped when 90 percent fuel gas by volume is detected within the pipe.
5. Persons not involved in the purging operations shall be evacuated from all areas within 10 feet (3048 mm) of the point of discharge.

G2417.7.1.4 (406.7.1.4) Combustible gas indicator. Combustible gas indicators shall be listed and shall be calibrated in accordance with the manufacturer's instructions. Combustible gas indicators shall numerically display a volume scale from zero percent to 100 percent in 1 percent or smaller increments.

G2417.7.2 (406.7.2) Piping systems allowed to be purged indoors or outdoors. The purging of *piping systems* shall be in accordance with the provisions of Section

G2417.7.2.1 where the *piping system* meets both of the following:

1. The design operating gas pressure is 2 psig (13.79 kPa) or less.
2. The *piping* being purged is constructed entirely from pipe or tubing not meeting the size and length criteria of Table G2417.7.1.1.

G2417.7.2.1 (406.7.2.1) Purging procedure. The *piping system* shall be purged in accordance with one or more of the following:

1. The *piping* shall be purged with fuel gas and shall discharge to the outdoors.
2. The *piping* shall be purged with fuel gas and shall discharge to the indoors or outdoors through an *appliance* burner not located in a combustion chamber. Such burner shall be provided with a continuous source of ignition.
3. The *piping* shall be purged with fuel gas and shall discharge to the indoors or outdoors through a burner that has a continuous source of ignition and that is designed for such purpose.
4. The *piping* shall be purged with fuel gas that is discharged to the indoors or outdoors, and the point of discharge shall be monitored with a listed combustible gas detector in accordance with Section G2417.7.2.2. Purging shall be stopped when fuel gas is detected.
5. The *piping* shall be purged by the gas supplier in accordance with written procedures.

G2417.7.2.2 (406.7.2.2) Combustible gas detector. Combustible gas detectors shall be listed and shall be calibrated or tested in accordance with the manufacturer's instructions. Combustible gas detectors shall be capable of indicating the presence of fuel gas.

G2417.7.3 (406.7.3) Purging appliances and equipment. After the *piping system* has been placed in operation, *appliances* and *equipment* shall be purged before being placed into operation.

SECTION G2418 (407) PIPING SUPPORT

G2418.1 (407.1) General. *Piping* shall be provided with support in accordance with Section G2418.2.

G2418.2 (407.2) Design and installation. *Piping* shall be supported with metal pipe hooks, metal pipe straps, metal bands, metal brackets, metal hangers or building structural components suitable for the size of *piping*, of adequate strength and quality, and located at intervals so as to prevent or damp out excessive vibration. *Piping* shall be anchored to prevent undue strains on connected *appliances* and shall not be supported by other *piping*. Pipe hangers and supports shall conform to the requirements of MSS SP-58 and shall be spaced in accordance with Section G2424. Supports, hangers and anchors shall be installed so as not to interfere with the free expansion and contraction of the *piping* between anchors. All parts of the supporting *equipment* shall be designed and installed so that they will not be disengaged by movement of the supported *piping*.

SECTION G2419 (408) DRIPS AND SLOPED PIPING

G2419.1 (408.1) Slopes. *Piping* for other than dry gas conditions shall be sloped not less than $^1/_4$ inch in 15 feet (6.4 mm in 4572 mm) to prevent traps.

G2419.2 (408.2) Drips. Where wet gas exists, a *drip* shall be provided at any point in the line of pipe where *condensate* could collect. A *drip* shall also be provided at the outlet of the *meter* and shall be installed so as to constitute a trap wherein an accumulation of *condensate* will shut off the flow of gas before the *condensate* will run back into the *meter*.

G2419.3 (408.3) Location of drips. *Drips* shall be provided with *ready access* to permit cleaning or emptying. A *drip* shall not be located where the *condensate* is subject to freezing.

G2419.4 (408.4) Sediment trap. Where a sediment trap is not incorporated as part of the appliance, a sediment trap shall be installed downstream of the appliance shutoff valve as close to the inlet of the appliance as practical. The sediment trap shall be either a tee fitting having a capped nipple of any length installed vertically in the bottommost opening of the tee as illustrated in Figure G2419.4 or other device approved as an effective sediment trap. Illuminating appliances, ranges, clothes dryers, decorative vented appliances for installation in vented fireplaces, gas fireplaces and outdoor grills need not be so equipped.

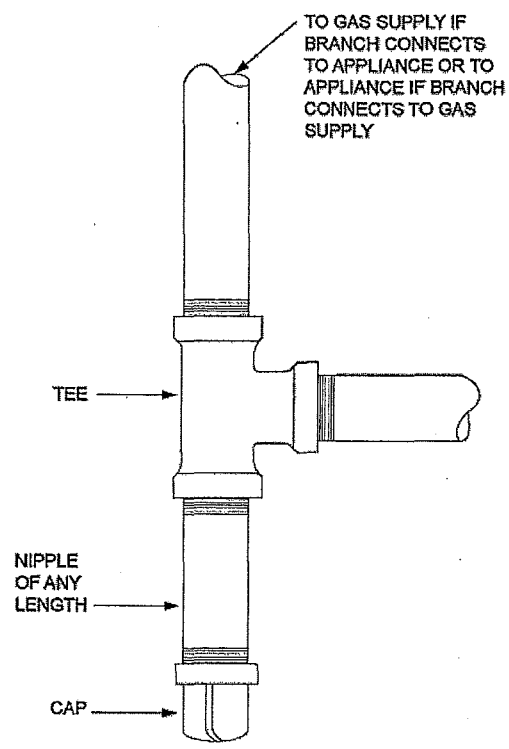

FIGURE G2419.4 (408.4)
METHOD OF INSTALLING A TEE FITTING SEDIMENT TRAP

SECTION G2420 (409) SHUTOFF VALVES

G2420.1 (409.1) General. *Piping systems* shall be provided with shutoff valves in accordance with this section.

G2420.1.1 (409.1.1) Valve approval. Shutoff valves shall be of an *approved* type; shall be constructed of materials compatible with the *piping*; and shall comply with the standard that is applicable for the pressure and application, in accordance with Table G2420.1.1.

G2420.1.2 (409.1.2) Prohibited locations. Shutoff valves shall be prohibited in *concealed locations* and *furnace plenums*.

G2420.1.3 (409.1.3) Access to shutoff valves. Shutoff *valves* shall be located in places so as to provide access for operation and shall be installed so as to be protected from damage.

G2420.2 (409.2) Meter valve. Every *meter* shall be equipped with a shutoff valve located on the supply side of the *meter*.

G2420.3 (409.3.2) Individual buildings. In a common system serving more than one building, shutoff valves shall be installed outdoors at each building.

G2420.4 (409.4) MP regulator valves. A listed shutoff valve shall be installed immediately ahead of each MP *regulator*.

G2420.5 (409.5) Appliance shutoff valve. Each *appliance* shall be provided with a shutoff valve in accordance with Section G2420.5.1, G2420.5.2 or G2420.5.3.

G2420.5.1 (409.5.1) Located within same room. The shutoff valve shall be located in the same room as the *appliance*. The shutoff valve shall be within 6 feet (1829 mm) of the *appliance*, and shall be installed upstream of the union, connector or quick disconnect device it serves. Such shutoff *valves* shall be provided with *access*. *Appliance shutoff valves* located in the firebox of a *fireplace* shall be installed in accordance with the *appliance* manufacturer's instructions.

G2420.5.2 (409.5.2) Vented decorative appliances and room heaters. Shutoff valves for vented decorative *appliances*, room heaters and decorative *appliances* for installation in vented fireplaces shall be permitted to be installed in an area remote from the *appliances* where such valves are provided with *ready access*. Such *valves* shall be permanently identified and shall not serve another *appliance*. The *piping* from the shutoff valve to within 6 feet (1829 mm) of the *appliance* shall be designed, sized and installed in accordance with Sections G2412 through G2419.

G2420.5.3 (409.5.3) Located at manifold. Where the *appliance* shutoff valve is installed at a manifold, such shutoff valve shall be located within 50 feet (15 240 mm) of the *appliance* served and shall be readily accessible and permanently identified. The *piping* from the manifold to within 6 feet (1829 mm) of the *appliance* shall be designed, sized and installed in accordance with Sections G2412 through G2419.

SECTION G2421 (410) FLOW CONTROLS

G2421.1 (410.1) Pressure regulators. A line *pressure regulator* shall be installed where the *appliance* is designed to operate at a lower pressure than the supply pressure. *Line gas pressure regulators* shall be *listed* as complying with ANSI Z21.80. *Access* shall be provided to *pressure regulators*. *Pressure regulators* shall be protected from physical damage. *Regulators* installed on the exterior of the building shall be *approved* for outdoor installation.

G2421.2 (410.2) MP regulators. MP *pressure regulators* shall comply with the following:

1. The MP *regulator* shall be *approved* and shall be suitable for the inlet and outlet gas pressures for the application.
2. The MP *regulator* shall maintain a reduced outlet pressure under lock-up (no-flow) conditions.
3. The capacity of the MP *regulator*, determined by published ratings of its manufacturer, shall be adequate to supply the *appliances* served.
4. The MP *pressure regulator* shall be provided with *access*. Where located indoors, the *regulator* shall be vented to the outdoors or shall be equipped with a leak-limiting device, in either case complying with Section G2421.3.
5. A tee fitting with one opening capped or plugged shall be installed between the MP *regulator* and its upstream shutoff valve. Such tee fitting shall be positioned to allow connection of a pressure-measuring instrument and to serve as a sediment trap.
6. A tee fitting with one opening capped or plugged shall be installed not less than 10 pipe diameters downstream of the MP *regulator* outlet. Such tee fitting shall be

TABLE G2420.1.1 (409.1.1)
MANUAL GAS VALVE STANDARDS

VALVE STANDARDS	APPLIANCE SHUTOFF VALVE APPLICATION UP TO 1/2 psig PRESSURE	OTHER VALVE APPLICATIONS			
		UP TO 1/2 psig PRESSURE	UP TO 2 psig PRESSURE	UP TO 5 psig PRESSURE	UP TO 125 psig PRESSURE
ANSI Z21.15	X	—	—	—	—
ASME B 16.44	X	X	X[a]	X[b]	—
ASME B 16.33	X	X	X	X	X

For SI: 1 pound per square inch gauge = 6.895 kPa.
a. If labeled 2G.
b. If labeled 5G.

positioned to allow connection of a pressure-measuring instrument.

7. Where connected to rigid *piping*, a union shall be installed within 1 foot (304 mm) of either side of the MP *regulator*.

G2421.3 (410.3) Venting of regulators. *Pressure regulators* that require a vent shall be vented directly to the outdoors. The vent shall be designed to prevent the entry of insects, water and foreign objects.

Exception: A vent to the outdoors is not required for *regulators* equipped with and *labeled* for utilization with an *approved* vent-limiting device installed in accordance with the manufacturer's instructions.

G2421.3.1 (410.3.1) Vent piping. Vent *piping* for relief vents and breather vents shall be constructed of materials allowed for *gas piping* in accordance with Section G2414. Vent *piping* shall be not smaller than the vent connection on the pressure regulating device. Vent *piping* serving relief vents and combination relief and breather vents shall be run independently to the outdoors and shall serve only a single device vent. Vent *piping* serving only breather vents is permitted to be connected in a manifold arrangement where sized in accordance with an *approved* design that minimizes backpressure in the event of diaphragm rupture. *Regulator* vent *piping* shall not exceed the length specified in the *regulator* manufacturer's installation instructions.

G2421.4 (410.4) Excess flow valves. Where automatic *excess flow valves* are installed, they shall be listed for the application and shall be sized and installed in accordance with the manufacturer's instructions.

G2421.5 (410.5) Flashback arrestor check valve. Where fuel gas is used with oxygen in any hot work operation, a listed protective device that serves as a combination flashback arrestor and backflow check valve shall be installed at an *approved* location on both the fuel gas and oxygen supply lines. Where the pressure of the piped fuel gas supply is insufficient to ensure such safe operation, *approved* equipment shall be installed between the gas meter and the appliance that increases pressure to the level required for such safe operation.

SECTION G2422 (411) APPLIANCE CONNECTIONS

G2422.1 (411.1) Connecting appliances. *Appliances* shall be connected to the *piping system* by one of the following:

1. Rigid metallic pipe and fittings.
2. Corrugated stainless steel *tubing* (CSST) where installed in accordance with the manufacturer's instructions.
3. Listed and labeled *appliance connectors* in compliance with ANSI Z21.24 and installed in accordance with the manufacturer's instructions and located entirely in the same room as the *appliance*.
4. *Listed* and *labeled* quick-disconnect devices used in conjunction with *listed* and *labeled appliance connectors*.
5. *Listed* and *labeled* convenience outlets used in conjunction with *listed* and *labeled appliance connectors*.
6. *Listed* and *labeled* outdoor *appliance connectors* in compliance with ANSI Z21.75/CSA 6.27 and installed in accordance with the manufacturer's instructions.
7. *Listed* outdoor gas hose connectors in compliance with ANSI Z21.54 used to connect portable outdoor *appliances*. The gas hose connection shall be made only in the outdoor area where the *appliance* is used, and shall be to the gas *piping* supply at an *appliance* shutoff valve, a *listed* quick-disconnect device or *listed* gas convenience outlet.

G2422.1.1 (411.1.2) Protection from damage. Connectors and *tubing* shall be installed so as to be protected against physical damage.

G2422.1.2 (411.1.3) Connector installation. *Appliance* fuel connectors shall be installed in accordance with the manufacturer's instructions and Sections G2422.1.2.1 through G2422.1.2.4.

G2422.1.2.1 (411.1.3.1) Maximum length. Connectors shall have an overall length not to exceed 6 feet (1829 mm). Measurement shall be made along the centerline of the connector. Only one connector shall be used for each *appliance*.

Exception: Rigid metallic *piping* used to connect an *appliance* to the *piping system* shall be permitted to have a total length greater than 6 feet (1829 mm) provided that the connecting pipe is sized as part of the *piping system* in accordance with Section G2413 and the location of the *appliance* shutoff valve complies with Section G2420.5.

G2422.1.2.2 (411.1.3.2) Minimum size. Connectors shall have the capacity for the total *demand* of the connected *appliance*.

G2422.1.2.3 (411.1.3.3) Prohibited locations and penetrations. Connectors shall not be concealed within, or extended through, walls, floors, partitions, ceilings or *appliance* housings.

Exceptions:

1. Connectors constructed of materials allowed for *piping systems* in accordance with Section G2414 shall be permitted to pass through walls, floors, partitions and ceilings where installed in accordance with Section G2420.5.2 or G2420.5.3.
2. Rigid steel pipe connectors shall be permitted to extend through openings in *appliance* housings.
3. *Fireplace* inserts that are factory equipped with grommets, sleeves or other means of protection in accordance with the listing of the *appliance*.
4. Semirigid *tubing* and *listed* connectors shall be permitted to extend through an opening in an *appliance* housing, cabinet or casing where

the tubing or connector is protected against damage.

G2422.1.2.4 (411.1.3.4) Shutoff valve. A shutoff valve not less than the nominal size of the connector shall be installed ahead of the connector in accordance with Section G2420.5.

G2422.1.3 (411.1.5) Connection of gas engine-powered air conditioners. Internal combustion engines shall not be rigidly connected to the gas supply *piping*.

G2422.1.4 (411.1.6) Unions. A union fitting shall be provided for *appliances* connected by rigid metallic pipe. Such unions shall be accessible and located within 6 feet (1829 mm) of the *appliance*.

G2422.1.5 (411.1.4) Movable appliances. Where *appliances* are equipped with casters or are otherwise subject to periodic movement or relocation for purposes such as routine cleaning and maintenance, such *appliances* shall be connected to the supply system *piping* by means of an *appliance connector listed* as complying with ANSI Z21.69 or by means of Item 1 of Section G2422.1. Such flexible connectors shall be installed and protected against physical damage in accordance with the manufacturer's instructions.

G2422.2 (411.3) Suspended low-intensity infrared tube heaters. Suspended low-intensity infrared tube heaters shall be connected to the building *piping system* with a connector *listed* for the application complying with ANSI Z21.24/CGA 6.10. The connector shall be installed as specified by the tube heater manufacturer's instructions.

SECTION G2423 (413) COMPRESSED NATURAL GAS MOTOR VEHICLE FUEL-DISPENSING FACILITIES

G2423.1 (413.1) General. Motor fuel-dispensing facilities for CNG fuel shall be in accordance with Section 413 of the *International Fuel Gas Code.*

SECTION G2424 (415) PIPING SUPPORT INTERVALS

G2424.1 (415.1) Interval of support. *Piping* shall be supported at intervals not exceeding the spacing specified in Table G2424.1. Spacing of supports for CSST shall be in accordance with the CSST manufacturer's instructions.

TABLE G2424.1 (415.1) SUPPORT OF PIPING

STEEL PIPE, NOMINAL SIZE OF PIPE (inches)	SPACING OF SUPPORTS (feet)	NOMINAL SIZE OF TUBING SMOOTH-WALL (inch O.D.)	SPACING OF SUPPORTS (feet)
$^1/_2$	6	$^1/_2$	4
$^3/_4$ or 1	8	$^5/_8$ or $^3/_4$	6
$1^1/_4$ or larger (horizontal)	10	$^7/_8$ or 1 (horizontal)	8
$1^1/_4$ or larger (vertical)	Every floor level	1 or larger (vertical)	Every floor level

For SI: 1 inch = 25.4 mm, 1 foot = 304.8 mm.

SECTION G2425 (501) GENERAL

G2425.1 (501.1) Scope. This section shall govern the installation, maintenance, repair and approval of factory-built *chimneys, chimney* liners, vents and connectors and the utilization of masonry chimneys serving gas-fired *appliances*.

G2425.2 (501.2) General. Every *appliance* shall discharge the products of combustion to the outdoors, except for *appliances* exempted by Section G2425.8.

G2425.3 (501.3) Masonry chimneys. *Masonry chimneys* shall be constructed in accordance with Section G2427.5 and Chapter 10.

G2425.4 (501.4) Minimum size of chimney or vent. *Chimneys* and vents shall be sized in accordance with Sections G2427 and G2428.

G2425.5 (501.5) Abandoned inlet openings. Abandoned inlet openings in *chimneys* and vents shall be closed by an *approved* method.

G2425.6 (501.6) Positive pressure. Where an *appliance* equipped with a mechanical forced *draft* system creates a positive pressure in the venting system, the venting system shall be designed for positive pressure applications.

G2425.7 (501.7) Connection to fireplace. Connection of *appliances* to *chimney* flues serving *fireplaces* shall be in accordance with Sections G2425.7.1 through G2425.7.3.

G2425.7.1 (501.7.1) Closure and access. A noncombustible seal shall be provided below the point of connection to prevent entry of room air into the flue. Means shall be provided for *access* to the flue for inspection and cleaning.

G2425.7.2 (501.7.2) Connection to factory-built fireplace flue. An *appliance* shall not be connected to a flue serving a *factory-built fireplace* unless the *appliance* is specifically *listed* for such installation. The connection shall be made in accordance with the *appliance* manufacturer's installation instructions.

G2425.7.3 (501.7.3) Connection to masonry fireplace flue. A connector shall extend from the *appliance* to the flue serving a *masonry fireplace* such that the *flue gases* are exhausted directly into the flue. The connector shall be accessible or removable for inspection and cleaning of both the connector and the flue. *Listed* direct connection devices shall be installed in accordance with their listing.

G2425.8 (501.8) Appliances not required to be vented. The following *appliances* shall not be required to be vented:

1. Ranges.
2. Built-in domestic cooking units *listed* and marked for optional venting.
3. Hot plates and laundry stoves.
4. *Type 1 clothes dryers* (*Type 1 clothes dryers* shall be exhausted in accordance with the requirements of Section G2439).
5. Refrigerators.
6. Counter *appliances*.
7. Room heaters *listed* for unvented use.

Where the *appliances* listed in Items 5 through 7 above are installed so that the aggregate input rating exceeds 20 Btu per hour per cubic foot (207 W/m^3) of volume of the room or space in which such *appliances* are installed, one or more shall be provided with venting *systems* or other *approved* means for conveying the *vent gases* to the outdoor atmosphere so that the aggregate input rating of the remaining *unvented appliances* does not exceed 20 Btu per hour per cubic foot (207 W/m^3). Where the room or space in which the *appliance* is installed is directly connected to another room or space by a doorway, archway or other opening of comparable size that cannot be closed, the volume of such adjacent room or space shall be permitted to be included in the calculations.

G2425.9 (501.9) Chimney entrance. Connectors shall connect to a *masonry chimney* flue at a point not less than 12 inches (305 mm) above the lowest portion of the interior of the *chimney* flue.

G2425.10 (501.10) Connections to exhauster. *Appliance* connections to a *chimney* or vent equipped with a power exhauster shall be made on the inlet side of the exhauster. Joints on the positive pressure side of the exhauster shall be sealed to prevent flue-gas leakage as specified by the manufacturer's installation instructions for the exhauster.

G2425.11 (501.11) Masonry chimneys. *Masonry chimneys* utilized to vent *appliances* shall be located, constructed and sized as specified in the manufacturer's installation instructions for the *appliances* being vented and Section G2427.

G2425.12 (501.12) Residential and low-heat appliances flue lining systems. *Flue lining* systems for use with residential-type and low-heat *appliances* shall be limited to the following:

1. Clay *flue lining* complying with the requirements of ASTM C 315 or equivalent. Clay *flue lining* shall be installed in accordance with Chapter 10.
2. *Listed chimney* lining systems complying with UL 1777.
3. Other *approved* materials that will resist, without cracking, softening or corrosion, *flue gases* and *condensate* at temperatures up to 1,800°F (982°C).

G2425.13 (501.13) Category I appliance flue lining systems. *Flue lining* systems for use with Category I *appliances* shall be limited to the following:

1. *Flue lining* systems complying with Section G2425.12.
2. *Chimney* lining systems *listed* and *labeled* for use with gas *appliances* with *draft hoods* and other Category I gas *appliances listed* and *labeled* for use with Type B vents.

G2425.14 (501.14) Category II, III and IV appliance venting systems. The design, sizing and installation of vents for Category II, III and IV *appliances* shall be in accordance with the *appliance* manufacturer's instructions.

G2425.15 (501.15) Existing chimneys and vents. Where an *appliance* is permanently disconnected from an existing *chimney* or vent, or where an *appliance* is connected to an existing *chimney* or vent during the process of a new installation, the *chimney* or vent shall comply with Sections G2425.15.1 through G2425.15.4.

G2425.15.1 (501.15.1) Size. The *chimney* or vent shall be resized as necessary to control flue gas condensation in the interior of the *chimney* or vent and to provide the *appliance* or *appliances* served with the required *draft*. For Category I *appliances*, the resizing shall be in accordance with Section G2426.

G2425.15.2 (501.15.2) Flue passageways. The flue gas passageway shall be free of obstructions and combustible deposits and shall be cleaned if previously used for venting a solid or liquid fuel-burning *appliance* or *fireplace*. The *flue liner*, *chimney* inner wall or vent inner wall shall be continuous and shall be free of cracks, gaps, perforations, or other damage or deterioration that would allow the escape of *combustion products*, including gases, moisture and creosote.

G2425.15.3 (501.15.3) Cleanout. *Masonry chimney* flues shall be provided with a cleanout opening having a minimum height of 6 inches (152 mm). The upper edge of the opening shall be located not less than 6 inches (152 mm) below the lowest *chimney* inlet opening. The cleanout shall be provided with a tight-fitting, noncombustible cover.

G2425.15.4 (501.15.4) Clearances. *Chimneys* and vents shall have airspace *clearance* to combustibles in accordance with Chapter 10 and the *chimney* or vent manufacturer's installation instructions.

Exception: *Masonry chimneys* without the required air-space *clearances* shall be permitted to be used if lined or relined with a *chimney* lining system *listed* for use in *chimneys* with reduced *clearances* in accordance with UL 1777. The *chimney clearance* shall be not less than that permitted by the terms of the *chimney* liner listing and the manufacturer's instructions.

G2425.15.4.1 (501.15.4.1) Fireblocking. Noncombustible fireblocking shall be provided in accordance with Chapter 10.

SECTION G2426 (502) VENTS

G2426.1 (502.1) General. Vents, except as provided in Section G2427.7, shall be *listed* and *labeled*. Type B and BW vents shall be tested in accordance with UL 441. Type L vents shall be tested in accordance with UL 641. Vents for Category II and III *appliances* shall be tested in accordance with UL 1738. Plastic vents for Category IV *appliances* shall not be required to be *listed* and *labeled* where such vents are as specified by the *appliance* manufacturer and are installed in accordance with the *appliance* manufacturer's instructions.

G2426.2 (502.2) Connectors required. Connectors shall be used to connect *appliances* to the vertical *chimney* or vent, except where the *chimney* or vent is attached directly to the *appliance*. Vent *connector* size, material, construction and installation shall be in accordance with Section G2427.

G2426.3 (502.3) Vent application. The application of vents shall be in accordance with Table G2427.4.

G2426.4 (502.4) Insulation shield. Where vents pass through insulated assemblies, an insulation shield constructed of steel having a minimum thickness of 0.0187 inch (0.4712 mm) (No. 26 gage) shall be installed to provide *clearance* between the vent and the insulation material. The *clearance* shall not be less than the *clearance* to combustibles specified by the vent manufacturer's installation instructions. Where vents pass through attic space, the shield shall terminate not less than 2 inches (51 mm) above the insulation materials and shall be secured in place to prevent displacement. Insulation shields provided as part of a *listed* vent system shall be installed in accordance with the manufacturer's instructions.

G2426.5 (502.5) Installation. Vent systems shall be sized, installed and terminated in accordance with the vent and *appliance* manufacturer's installation instructions and Section G2427.

G2426.6 (502.6) Support of vents. All portions of vents shall be adequately supported for the design and weight of the materials employed.

G2426.7 (502.7) Protection against physical damage. In *concealed locations*, where a vent is installed through holes or notches in studs, joists, rafters or similar members less than $1^1/_2$ inches (38 mm) from the nearest edge of the member, the vent shall be protected by shield plates. Protective steel shield plates having a minimum thickness of 0.0575-inch (1.463 mm) (16 gage) shall cover the area of the vent where the member is notched or bored and shall extend a minimum of 4 inches (102 mm) above sole plates, below top plates and to each side of a stud, joist or rafter.

G2426.7.1 (502.7.1) Door swing. Appliance and equipment vent terminals shall be located such that doors cannot swing within 12 inches (305 mm) horizontally of the vent terminal. Door stops or closures shall not be installed to obtain this clearance.

SECTION G2427 (503) VENTING OF APPLIANCES

G2427.1 (503.1) General. The venting of appliances shall be in accordance with Sections G2427.2 through G2427.16.

G2427.2 (503.2) Venting systems required. Except as permitted in Sections G2427.2.1, G2427.2.2 and G2425.8, all *appliances* shall be connected to *venting systems*.

G2427.2.1 (503.2.3) Direct-vent appliances. *Listed direct-vent appliances* shall be installed in accordance with the manufacturer's instructions and Section G2427.8, Item 3.

G2427.2.2 (503.2.4) Appliances with integral vents. *Appliances* incorporating integral venting means shall be installed in accordance with the manufacturer's instructions and Section G2427.8, Items 1 and 2.

G2427.3 (503.3) Design and construction. Venting systems shall be designed and constructed so as to convey all flue and *vent gases* to the outdoors.

G2427.3.1 (503.3.1) Appliance draft requirements. A venting system shall satisfy the *draft* requirements of the *appliance* in accordance with the manufacturer's instructions.

G2427.3.2 (503.3.2) Design and construction. *Appliances* required to be vented shall be connected to a venting system designed and installed in accordance with the provisions of Sections G2427.4 through G2427.16.

G2427.3.3 (503.3.3) Mechanical draft systems. Mechanical *draft* systems shall comply with the following:

1. Mechanical *draft* systems shall be *listed* and shall be installed in accordance with the manufacturer's instructions for both the *appliance* and the mechanical *draft* system.
2. *Appliances* requiring venting shall be permitted to be vented by means of mechanical *draft* systems of either forced or induced *draft* design.
3. Forced *draft* systems and all portions of induced *draft* systems under positive pressure during operation shall be designed and installed so as to prevent leakage of flue or *vent gases* into a building.
4. *Vent connectors* serving *appliances* vented by natural *draft* shall not be connected into any portion of mechanical *draft* systems operating under positive pressure.
5. Where a mechanical *draft* system is employed, provisions shall be made to prevent the flow of gas to the *main burners* when the *draft* system is not performing so as to satisfy the operating requirements of the *appliance* for safe performance.
6. The exit terminals of mechanical *draft* systems shall be not less than 7 feet (2134 mm) above finished ground level where located adjacent to public walkways and shall be located as specified in Section G2427.8, Items 1 and 2.

G2427.3.4 (503.3.5) Air ducts and furnace plenums. *Venting systems* shall not extend into or pass through any fabricated air duct or *furnace plenum*.

G2427.3.5 (503.3.6) Above-ceiling air-handling spaces. Where a venting system passes through an above-ceiling air-handling space or other nonducted portion of an air-handling system, the venting system shall conform to one of the following requirements:

1. The venting system shall be a *listed* special gas vent; other venting system serving a Category III or Category IV *appliance*; or other positive pressure vent, with joints sealed in accordance with the *appliance* or vent manufacturer's instructions.
2. The venting system shall be installed such that fittings and joints between sections are not installed in the above-ceiling space.
3. The venting system shall be installed in a conduit or enclosure with sealed joints separating the interior of the conduit or enclosure from the ceiling space.

G2427.4 (503.4) Type of venting system to be used. The type of venting system to be used shall be in accordance with Table G2427.4.

G2427.4.1 (503.4.1) Plastic piping. Where plastic piping is used to vent an appliance, the appliance shall be listed for use with such venting materials and the appliance manufacturer's installation instructions shall identify the specific plastic piping material.

G2427.4.1.1 (503.4.1.1) (IFGS) Plastic vent joints. Plastic *pipe* and fittings used to vent *appliances* shall be installed in accordance with the *appliance* manufacturer's instructions. Where a primer is required, it shall be of a contrasting color.

G2427.4.2 (503.4.2) Special gas vent. Special gas *vent* shall be *listed* and installed in accordance with the special gas *vent* manufacturer's instructions.

G2427.5 (503.5) Masonry, metal and factory-built chimneys. Masonry, metal and factory-built *chimneys* shall comply with Sections G2427.5.1 through G2427.5.9.

G2427.5.1 (503.5.1) Factory-built chimneys. Factory-built *chimneys* shall be installed in accordance with the manufacturer's instructions. Factory-built *chimneys* used to vent *appliances* that operate at a positive vent pressure shall be *listed* for such application.

G2427.5.2 (503.5.3) Masonry chimneys. Masonry *chimneys* shall be built and installed in accordance with NFPA 211 and shall be lined with *approved* clay *flue lining*, a *listed chimney* lining system or other *approved* material that will resist corrosion, erosion, softening or cracking from vent gases at temperatures up to 1,800°F (982°C).

Exception: Masonry *chimney* flues serving *listed* gas *appliances* with *draft hoods*, Category I *appliances* and other gas *appliances listed* for use with Type B vents shall be permitted to be lined with a *chimney* lining system specifically *listed* for use only with such *appliances*. The liner shall be installed in accordance with the liner manufacturer's instructions. A permanent identifying label shall be attached at the point where the connection is to be made to the liner. The label shall read: "This *chimney* liner is for *appliances* that burn gas only. Do not connect to solid or liquid fuel-burning appliances or incinerators."

G2427.5.3 (503.5.4) Chimney termination. *Chimneys* for residential-type or low-heat *appliances* shall extend not less than 3 feet (914 mm) above the highest point where they pass through a roof of a building and not less than 2 feet (610 mm) higher than any portion of a building within a horizontal distance of 10 feet (3048 mm). *Chimneys* for medium-heat *appliances* shall extend not less than 10 feet (3048 mm) higher than any portion of any building within 25 feet (7620 mm). *Chimneys* shall extend not less than 5 feet (1524 mm) above the highest connected *appliance draft hood* outlet or *flue collar*. Decorative shrouds shall not be installed at the termination of factory-built *chimneys* except where such shrouds are *listed* and *labeled* for use with the specific factory-built *chimney* system and are installed in accordance with the manufacturer's instructions.

G2427.5.4 (503.5.5) Size of chimneys. The effective area of a *chimney* venting system serving *listed appliances* with *draft hoods*, Category I *appliances*, and other *appliances listed* for use with Type B vents shall be determined in accordance with one of the following methods:

1. The provisions of Section G2428.
2. For sizing an individual *chimney* venting system for a single *appliance* with a *draft hood*, the effective areas of the *vent connector* and *chimney* flue shall be not less than the area of the *appliance flue collar* or *draft hood* outlet, nor greater than seven times the *draft hood* outlet area.
3. For sizing a *chimney* venting system connected to two *appliances* with *draft hoods*, the effective area of the *chimney* flue shall be not less than the area of

TABLE G2427.4 (503.4)
TYPE OF VENTING SYSTEM TO BE USED

APPLIANCES	TYPE OF VENTING SYSTEM
Listed Category I *appliances* *Listed appliances* equipped with draft hood *Appliances* listed for use with Type B gas vent	Type B gas *vent* (Section G2427.6) *Chimney* (Section G2427.5) Single-wall metal pipe (Section G2427.7) *Listed* chimney lining system for gas venting (Section G2427.5.2) Special gas *vent* listed for these appliances (Section G2427.4.2)
Listed vented wall furnaces	Type B-W gas vent (Sections G2427.6, G2436)
Category II *appliances*	As specified or furnished by manufacturers of *listed appliances* (Sections G2427.4.1, G2427.4.2)
Category III *appliances*	As specified or furnished by manufacturers of *listed appliances* (Sections G2427.4.1, G2427.4.2)
Category IV *appliances*	As specified or furnished by manufacturers of *listed appliances* (Sections G2427.4.1, G2427.4.2)
Unlisted *appliances*	Chimney (Section G2427.5)
Decorative *appliances* in vented fireplaces	Chimney
Direct-vent *appliances*	See Section G2427.2.1
Appliances with integral vent	See Section G2427.2.2

the larger *draft hood* outlet plus 50 percent of the area of the smaller *draft hood* outlet, nor greater than seven times the smallest *draft hood* outlet area.

4. *Chimney venting systems* using mechanical *draft* shall be sized in accordance with *approved* engineering methods.

5. Other *approved* engineering methods.

G2427.5.5 (503.5.6) Inspection of chimneys. Before replacing an existing *appliance* or connecting a vent *connector* to a *chimney*, the *chimney* passageway shall be examined to ascertain that it is clear and free of obstructions and it shall be cleaned if previously used for venting solid or liquid fuel-burning appliances or *fireplaces*.

G2427.5.5.1 (503.5.6.1) Chimney lining. *Chimneys* shall be lined in accordance with NFPA 211.

Exception: Where an existing chimney complies with Sections G2427.5.5 through G2427.5.5.3 and its sizing is in accordance with Section G2427.5.4, its continued use shall be allowed where the *appliance* vented by such *chimney* is replaced by an *appliance* of similar type, input rating and efficiency.

G2427.5.5.2 (503.5.6.2) Cleanouts. Cleanouts shall be examined to determine if they will remain tightly closed when not in use.

G2427.5.5.3 (503.5.6.3) Unsafe chimneys. Where inspection reveals that an existing *chimney* is not safe for the intended application, it shall be repaired, rebuilt, lined, relined or replaced with a vent or *chimney* to conform to NFPA 211 and it shall be suitable for the *appliances* to be vented.

G2427.5.6 (503.5.7) Chimneys serving appliances burning other fuels. *Chimneys* serving *appliances* burning other fuels shall comply with Sections G2427.5.6.1 through G2427.5.6.4.

G2427.5.6.1 (503.5.7.1) Solid fuel-burning appliances. An *appliance* shall not be connected to a *chimney* flue serving a separate *appliance* designed to burn solid fuel.

G2427.5.6.2 (503.5.7.2) Liquid fuel-burning appliances. Where one *chimney* flue serves gas *appliances* and liquid fuel-burning appliances, the appliances shall be connected through separate openings or shall be connected through a single opening where joined by a suitable fitting located as close as practical to the *chimney*. Where two or more openings are provided into one *chimney* flue, they shall be at different levels. Where the appliances are automatically controlled, they shall be equipped with *safety shutoff devices*.

G2427.5.6.3 (503.5.7.3) Combination gas- and solid fuel-burning appliances. A combination gas- and solid fuel-burning *appliance* shall be permitted to be connected to a single chimney flue where equipped with a manual reset device to shut off gas to the *main burner* in the event of sustained backdraft or flue gas spillage. The *chimney* flue shall be sized to properly vent the *appliance*.

G2427.5.6.4 (503.5.7.4) Combination gas- and oil fuel-burning appliances. A *listed* combination gas- and oil fuel-burning *appliance* shall be permitted to be connected to a single *chimney* flue. The *chimney* flue shall be sized to properly vent the *appliance*.

G2427.5.7 (503.5.8) Support of chimneys. All portions of *chimneys* shall be supported for the design and weight of the materials employed. Factory-built *chimneys* shall be supported and spaced in accordance with the manufacturer's installation instructions.

G2427.5.8 (503.5.9) Cleanouts. Where a *chimney* that formerly carried flue products from liquid or solid fuel-burning appliances is used with an *appliance* using *fuel gas*, an accessible cleanout shall be provided. The cleanout shall have a tight-fitting cover and be installed so its upper edge is at least 6 inches (152 mm) below the lower edge of the lowest *chimney* inlet opening.

G2427.5.9 (503.5.10) Space surrounding lining or vent. The remaining space surrounding a *chimney* liner, gas vent, special gas *vent* or plastic *piping* installed within a masonry *chimney* flue shall not be used to vent another *appliance*. The insertion of another liner or vent within the *chimney* as provided in this *code* and the liner or vent manufacturer's instructions shall not be prohibited.

The remaining space surrounding a *chimney* liner, gas vent, special gas vent or plastic *piping* installed within a masonry, metal or factory-built *chimney* shall not be used to supply *combustion air*. Such space shall not be prohibited from supplying *combustion air* to *direct-vent appliances* designed for installation in a solid fuel-burning *fireplace* and installed in accordance with the manufacturer's instructions.

G2427.6 (503.6) Gas vents. Gas vents shall comply with Sections G2427.6.1 through G2427.6.11. (See Section G2403, Definitions.)

G2427.6.1 (503.6.1) Installation, general. Gas vents shall be installed in accordance with the manufacturer's instructions.

G2427.6.2 (503.6.2) Type B-W vent capacity. A Type B-W gas vent shall have a listed capacity not less than that of the *listed vented wall furnace* to which it is connected.

G2427.6.3 (503.6.4) Gas vent terminations. A gas vent shall terminate in accordance with one of the following:

1. Gas vents that are 12 inches (305 mm) or less in size and located not less than 8 feet (2438 mm) from a vertical wall or similar obstruction shall terminate above the roof in accordance with Figure G2427.6.3.

2. Gas vents that are over 12 inches (305 mm) in size or are located less than 8 feet (2438 mm) from a vertical wall or similar obstruction shall terminate not less than 2 feet (610 mm) above the highest point where they pass through the roof and not less than 2 feet (610 mm) above any portion of a building within 10 feet (3048 mm) horizontally.

3. As provided for direct-vent systems in Section G2427.2.1.
4. As provided for *appliances* with integral vents in Section G2427.2.2.
5. As provided for mechanical *draft* systems in Section G2427.3.3.

G2427.6.3.1 (503.6.4.1) Decorative shrouds. Decorative shrouds shall not be installed at the termination of gas vents except where such shrouds are *listed* for use with the specific gas venting system and are installed in accordance with manufacturer's instructions.

G2427.6.4 (503.6.5) Minimum height. A Type B or L gas vent shall terminate at least 5 feet (1524 mm) in vertical height above the highest connected *appliance draft hood* or *flue collar*. A Type B-W gas vent shall terminate not less than 12 feet (3658 mm) in vertical height above the bottom of the wall *furnace*.

G2427.6.5 (503.6.6) Roof terminations. Gas vents shall extend through the roof flashing, roof jack or roof thimble and terminate with a *listed* cap or *listed* roof assembly.

G2427.6.6 (503.6.7) Forced air inlets. Gas vents shall terminate not less than 3 feet (914 mm) above any forced air inlet located within 10 feet (3048 mm).

G2427.6.7 (503.6.8) Exterior wall penetrations. A gas *vent* extending through an exterior wall shall not terminate adjacent to the wall or below eaves or parapets, except as provided in Sections G2427.2.1 and G2427.3.3.

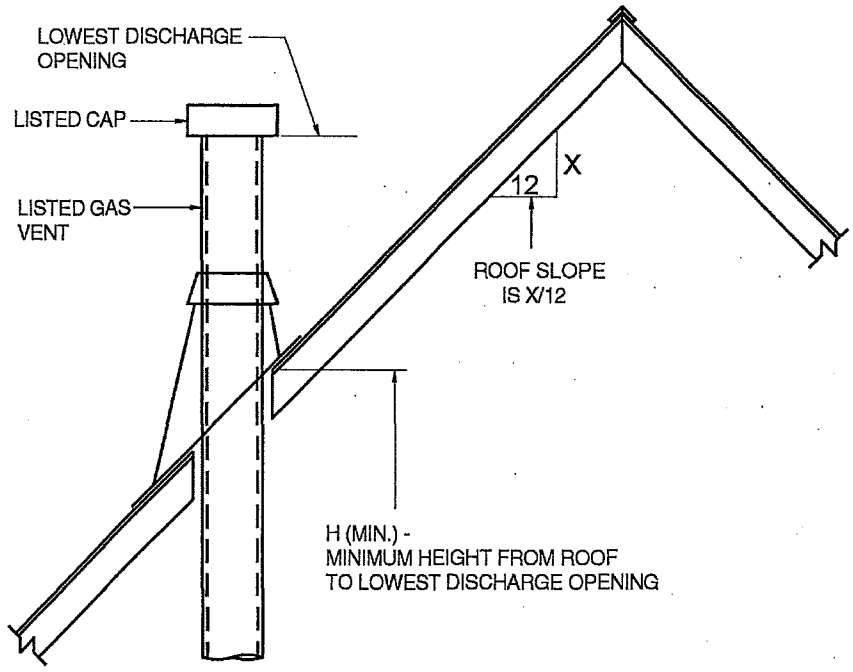

ROOF SLOPE	H (minimum) ft
Flat to $^{6}/_{12}$	1.0
Over $^{6}/_{12}$ to $^{7}/_{12}$	1.25
Over $^{7}/_{12}$ to $^{8}/_{12}$	1.5
Over $^{8}/_{12}$ to $^{9}/_{12}$	2.0
Over $^{9}/_{12}$ to $^{10}/_{12}$	2.5
Over $^{10}/_{12}$ to $^{11}/_{12}$	3.25
Over $^{11}/_{12}$ to $^{12}/_{12}$	4.0
Over $^{12}/_{12}$ to $^{14}/_{12}$	5.0
Over $^{14}/_{12}$ to $^{16}/_{12}$	6.0
Over $^{16}/_{12}$ to $^{18}/_{12}$	7.0
Over $^{18}/_{12}$ to $^{20}/_{12}$	7.5
Over $^{20}/_{12}$ to $^{21}/_{12}$	8.0

For SI: 1 foot = 304.8 mm.

FIGURE G2427.6.3 (503.6.4)
TERMINATION LOCATIONS FOR GAS VENTS WITH LISTED CAPS 12 INCHES OR LESS IN SIZE AT LEAST 8 FEET FROM A VERTICAL

G2427.6.8 (503.6.9) Size of gas vents. *Venting systems* shall be sized and constructed in accordance with Section G2428 or other *approved* engineering methods and the gas vent and *appliance* manufacturer's installation instructions.

G2427.6.8.1 (503.6.9.1) Category I appliances. The sizing of *natural draft venting systems* serving one or more *listed appliances* equipped with a *draft hood* or *appliances listed* for use with Type B gas vent, installed in a single story of a building, shall be in accordance with one of the following methods:

1. The provisions of Section G2428.
2. For sizing an individual gas vent for a single, draft-hood-equipped *appliance*, the effective area of the vent *connector* and the gas vent shall be not less than the area of the *appliance draft hood* outlet, nor greater than seven times the *draft hood* outlet area.
3. For sizing a gas vent connected to two *appliances* with *draft hoods*, the effective area of the vent shall be not less than the area of the larger *draft hood* outlet plus 50 percent of the area of the smaller *draft hood* outlet, nor greater than seven times the smaller *draft hood* outlet area.
4. *Approved* engineering practices.

G2427.6.8.2 (503.6.9.2) Vent offsets. Type B and L vents sized in accordance with Item 2 or 3 of Section G2427.6.8.1 shall extend in a generally vertical direction with offsets not exceeding 45 degrees (0.79 rad), except that a vent system having not more than one 60-degree (1.04 rad) *offset* shall be permitted. Any angle greater than 45 degrees (0.79 rad) from the vertical is considered horizontal. The total horizontal distance of a vent plus the horizontal vent *connector* serving *draft hood*-equipped *appliances* shall be not greater than 75 percent of the vertical height of the vent.

G2427.6.8.3 (503.6.9.3) Category II, III and IV appliances. The sizing of gas vents for Category II, III and IV appliances shall be in accordance with the appliance manufacturer's instructions. The sizing of plastic pipe that is specified by the appliance manufacturer as a venting material for Category II, III and IV appliances, shall be in accordance with the manufacturer's instructions.

G2427.6.8.4 (503.6.9.4) Mechanical draft. *Chimney venting systems* using mechanical *draft* shall be sized in accordance with *approved* engineering methods.

G2427.6.9 (503.6.11) Support of gas vents. Gas vents shall be supported and spaced in accordance with the manufacturer's installation instructions.

G2427.6.10 (503.6.12) Marking. In those localities where solid and liquid fuels are used extensively, gas vents shall be permanently identified by a label attached to the wall or ceiling at a point where the *vent connector* enters the gas vent. The determination of where such localities exist shall be made by the *code official*. The label shall read:

"This gas vent is for *appliances* that burn gas. Do not connect to solid or liquid fuel-burning appliances or incinerators."

G2427.6.11 (503.6.13) Fastener penetrations. Screws, rivets and other fasteners shall not penetrate the inner wall of double-wall gas vents, except at the transition from an *appliance draft hood* outlet, a *flue collar* or a single-wall metal connector to a double-wall vent.

G2427.7 (503.7) Single-wall metal pipe. Single-wall metal *pipe* vents shall comply with Sections G2427.7.1 through G2427.7.13.

G2427.7.1 (503.7.1) Construction. Single-wall metal pipe shall be constructed of galvanized sheet steel not less than 0.0304 inch (0.7 mm) thick, or other *approved*, noncombustible, corrosion-resistant material.

G2427.7.2 (503.7.2) Cold climate. Uninsulated single-wall metal pipe shall not be used outdoors for venting *appliances* in regions where the 99-percent winter design temperature is below 32°F (0°C).

G2427.7.3 (503.7.3) Termination. Single-wall metal pipe shall terminate at least 5 feet (1524 mm) in vertical height above the highest connected *appliance draft hood* outlet or *flue collar*. Single-wall metal pipe shall extend at least 2 feet (610 mm) above the highest point where it passes through a roof of a building and at least 2 feet (610 mm) higher than any portion of a building within a horizontal distance of 10 feet (3048 mm). An *approved* cap or roof assembly shall be attached to the terminus of a single-wall metal pipe.

G2427.7.4 (503.7.4) Limitations of use. Single-wall metal pipe shall be used only for runs directly from the space in which the *appliance* is located through the roof or exterior wall to the outdoor atmosphere.

G2427.7.5 (503.7.5) Roof penetrations. A pipe passing through a roof shall extend without interruption through the roof flashing, roof jack or roof thimble. Where a single-wall metal pipe passes through a roof constructed of combustible material, a noncombustible, nonventilating thimble shall be used at the point of passage. The thimble shall extend not less than 18 inches (457 mm) above and 6 inches (152 mm) below the roof with the annular space open at the bottom and closed only at the top. The thimble shall be sized in accordance with Section G2427.7.7.

G2427.7.6 (503.7.6) Installation. Single-wall metal pipe shall not originate in any unoccupied attic or concealed space and shall not pass through any attic, inside wall, concealed space, or floor. The installation of a single-wall metal pipe through an exterior combustible wall shall comply with Section G2427.7.7.

G2427.7.7 (503.7.7) Single-wall penetrations of combustible walls. Single-wall metal pipe shall not pass through a combustible exterior wall unless guarded at the point of passage by a ventilated metal thimble not smaller than the following:

1. For *listed appliances* with *draft hoods* and *appliances listed* for use with Type B gas vents, the thimble shall be not less than 4 inches (102 mm) larger in

diameter than the metal pipe. Where there is a run of not less than 6 feet (1829 mm) of metal pipe in the open between the *draft hood* outlet and the thimble, the thimble shall be permitted to be not less than 2 inches (51 mm) larger in diameter than the metal pipe.

2. For unlisted *appliances* having *draft hoods*, the thimble shall be not less than 6 inches (152 mm) larger in diameter than the metal pipe.
3. For residential and low-heat *appliances*, the thimble shall be not less than 12 inches (305 mm) larger in diameter than the metal pipe.

Exception: In lieu of thimble protection, all *combustible material* in the wall shall be removed a sufficient distance from the metal pipe to provide the specified *clearance* from such metal pipe to *combustible material*. Any material used to close up such opening shall be noncombustible.

G2427.7.8 (503.7.8) Clearances. Minimum *clearances* from single-wall metal pipe to *combustible material* shall be in accordance with Table G2427.10.5. The *clearance* from single-wall metal pipe to *combustible material* shall be permitted to be reduced where the *combustible material* is protected as specified for *vent connectors* in Table G2409.2.

G2427.7.9 (503.7.9) Size of single-wall metal pipe. A venting system constructed of single-wall metal pipe shall be sized in accordance with one of the following methods and the *appliance* manufacturer's instructions:

1. For a draft-hood-equipped *appliance*, in accordance with Section G2428.
2. For a venting system for a single *appliance* with a *draft hood*, the areas of the connector and the pipe each shall be not less than the area of the *appliance flue collar* or *draft hood* outlet, whichever is smaller. The vent area shall not be greater than seven times the *draft hood* outlet area.
3. Other *approved* engineering methods.

G2427.7.10 (503.7.10) Pipe geometry. Any shaped single-wall metal pipe shall be permitted to be used, provided that its equivalent effective area is equal to the effective area of the round pipe for which it is substituted, and provided that the minimum internal dimension of the pipe is not less than 2 inches (51 mm).

G2427.7.11 (503.7.11) Termination capacity. The vent cap or a roof assembly shall have a venting capacity of not less than that of the pipe to which it is attached.

G2427.7.12 (503.7.12) Support of single-wall metal pipe. All portions of single-wall metal pipe shall be supported for the design and weight of the material employed.

G2427.7.13 (503.7.13) Marking. Single-wall metal pipe shall comply with the marking provisions of Section G2427.6.10.

G2427.8 (503.8) Venting system termination location. The location of venting system terminations shall comply with the following (see Appendix C):

1. A mechanical *draft* venting system shall terminate not less than 3 feet (914 mm) above any forced-air inlet located within 10 feet (3048 mm).

   Exceptions:

   1. This provision shall not apply to the *combustion air* intake of a direct-vent *appliance*.
   2. This provision shall not apply to the separation of the integral outdoor air inlet and flue gas discharge of *listed* outdoor *appliances*.

2. A mechanical *draft* venting system, excluding *direct-vent appliances*, shall terminate not less than 4 feet (1219 mm) below, 4 feet (1219 mm) horizontally from, or 1 foot (305 mm) above any door, operable window or gravity air inlet into any building. The bottom of the vent terminal shall be located not less than 12 inches (305 mm) above finished ground level.
3. The vent terminal of a *direct*-vent *appliance* with an input of 10,000 *Btu* per hour (3 kW) or less shall be located not less than 6 inches (152 mm) from any air opening into a building. Such an *appliance* with an input over 10,000 *Btu* per hour (3 kW) but not over 50,000 *Btu* per hour (14.7 kW) shall be installed with a 9-inch (230 mm) vent termination *clearance*, and an *appliance* with an input over 50,000 Btu per hour (14.7 kW) shall have not less than a 12-inch (305 mm) vent termination *clearance*. The bottom of the vent terminal and the air intake shall be located not less than 12 inches (305 mm) above grade finished ground level.
4. Through-the-wall vents for Category II and IV *appliances* and noncategorized condensing *appliances* shall not terminate over public walkways or over an area where *condensate* or vapor could create a nuisance or hazard or could be detrimental to the operation of *regulators, relief valves* or other *equipment*. Where local experience indicates that *condensate* is a problem with Category I and III *appliances*, this provision shall also apply. Drains for *condensate* shall be installed in accordance with the appliance and vent manufacturer's installation instructions.
5. Vent systems for Category IV appliances that terminate through an outside wall of a building and discharge flue gases perpendicular to the adjacent wall shall be located not less than 10 feet (3048 mm) horizontally from an operable opening in an adjacent building. This requirement shall not apply to vent terminals that are 2 feet (607 mm) or more above or 25 feet (7620 mm) or more below operable openings.

G2427.9 (503.9) Condensation drainage. Provisions shall be made to collect and dispose of *condensate* from *venting systems* serving Category II and IV *appliances* and noncategorized condensing *appliances* in accordance with Section G2427.8, Item 4. Where local experience indicates that condensation is a problem, provisions shall be made to drain off and dispose of *condensate* from *venting systems* serving Category I and III *appliances* in accordance with Section G2427.8, Item 4.

G2427.10 (503.10) Vent connectors for Category I appliances. Vent *connectors* for Category I *appliances* shall comply with Sections G2427.10.1 through G2427.10.13.

G2427.10.1 (503.10.1) Where required. A vent *connector* shall be used to connect an *appliance* to a gas vent, *chimney* or single-wall metal pipe, except where the gas vent, *chimney* or single-wall metal pipe is directly connected to the *appliance*.

G2427.10.2 (503.10.2) Materials. *Vent connectors* shall be constructed in accordance with Sections G2427.10.2.1 through G2427.10.2.4.

G2427.10.2.1 (503.10.2.1) General. A *vent connector* shall be made of noncombustible corrosion-resistant material capable of withstanding the vent gas temperature produced by the *appliance* and of sufficient thickness to withstand physical damage.

G2427.10.2.2 (503.10.2.2) Vent connectors located in unconditioned areas. Where the *vent connector* used for an *appliance* having a *draft hood* or a Category I *appliance* is located in or passes through attics, crawl spaces or other unconditioned spaces, that portion of the *vent connector* shall be *listed* Type B, Type L or listed vent material having equivalent insulation properties.

Exception: Single-wall metal pipe located within the exterior walls of the building in areas having a local 99-percent winter design temperature of 5°F (-15°C) or higher shall be permitted to be used in unconditioned spaces other than attics and crawl spaces.

G2427.10.2.3 (503.10.2.3) Residential-type appliance connectors. Where *vent connectors* for residential-type *appliances* are not installed in attics or other unconditioned spaces, connectors for *listed appliances* having *draft hoods, appliances* having *draft hoods* and equipped with *listed conversion burners* and Category I *appliances* shall be one of the following:

1. Type B or L vent material.
2. Galvanized sheet steel not less than 0.018 inch (0.46 mm) thick.
3. Aluminum (1100 or 3003 alloy or equivalent) sheet not less than 0.027 inch (0.69 mm) thick.
4. Stainless steel sheet not less than 0.012 inch (0.31 mm) thick.
5. Smooth interior wall metal pipe having resistance to heat and corrosion equal to or greater than that of Item 2, 3 or 4.
6. A *listed* vent *connector*.

Vent connectors shall not be covered with insulation.

Exception: *Listed* insulated *vent connectors* shall be installed in accordance with the manufacturer's instructions.

G2427.10.2.4 (503.10.2.4) Low-heat appliance. A *vent connector* for a nonresidential, low-heat *appliance* shall be a factory-built *chimney* section or steel *pipe* having resistance to heat and corrosion equivalent to that for the appropriate galvanized pipe as specified in Table G2427.10.2.4. Factory-built *chimney* sections shall be joined together in accordance with the *chimney* manufacturer's instructions.

TABLE G2427.10.2.4 (503.10.2.4)
MINIMUM THICKNESS FOR GALVANIZED STEEL VENT CONNECTORS FOR LOW-HEAT APPLIANCES

DIAMETER OF CONNECTOR (inches)	MINIMUM THICKNESS (inch)
Less than 6	0.019
6 to less than 10	0.023
10 to 12 inclusive	0.029
14 to 16 inclusive	0.034
Over 16	0.056

For SI: 1 inch = 25.4 mm.

G2427.10.3 (503.10.3) Size of vent connector. *Vent connectors* shall be sized in accordance with Sections G2427.10.3.1 through G2427.3.5.

G2427.10.3.1 (503.10.3.1) Single draft hood and fan-assisted. A *vent connector* for an *appliance* with a single *draft hood* or for a Category I fan-assisted *combustion* system *appliance* shall be sized and installed in accordance with Section G2428 or other *approved* engineering methods.

G2427.10.3.2 (503.10.3.2) Multiple draft hood. For a single *appliance* having more than one *draft hood* outlet or *flue collar*, the manifold shall be constructed according to the instructions of the *appliance* manufacturer. Where there are no instructions, the manifold shall be designed and constructed in accordance with *approved* engineering practices. As an alternate method, the effective area of the manifold shall equal the combined area of the *flue collars* or *draft hood* outlets and the *vent connectors* shall have a minimum 1-foot (305 mm) rise.

G2427.10.3.3 (503.10.3.3) Multiple appliances. Where two or more *appliances* are connected to a common *vent* or *chimney*, each *vent connector* shall be sized in accordance with Section G2428 or other *approved* engineering methods.

As an alternative method applicable only when all of the *appliances* are *draft hood* equipped, each *vent connector* shall have an effective area not less than the area of the *draft hood* outlet of the *appliance* to which it is connected.

G2427.10.3.4 (503.10.3.4) Common connector/manifold. Where two or more *appliances* are vented through a common *vent connector* or vent manifold, the common *vent connector* or vent manifold shall be located at the highest level consistent with available headroom and the required *clearance* to *combustible materials* and shall be sized in accordance with Section G2428 or other *approved* engineering methods.

As an alternate method applicable only where there are two *draft hood*-equipped *appliances*, the effective area of the common *vent connector* or vent manifold and all junction fittings shall be not less than the area of

the larger *vent connector* plus 50 percent of the area of the smaller *flue collar* outlet.

G2427.10.3.5 (503.10.3.5) Size increase. Where the size of a *vent connector* is increased to overcome installation limitations and obtain connector capacity equal to the *appliance* input, the size increase shall be made at the *appliance draft hood* outlet.

G2427.10.4 (503.10.4) Two or more appliances connected to a single vent or chimney. Where two or more *vent connectors* enter a common gas vent, *chimney* flue, or single-wall metal pipe, the smaller connector shall enter at the highest level consistent with the available headroom or *clearance* to *combustible material*. *Vent connectors* serving Category I *appliances* shall not be connected to any portion of a *mechanical draft* system operating under positive static pressure, such as those serving Category III or IV *appliances*.

G2427.10.4.1 (503.10.4.1) Two or more openings. Where two or more openings are provided into one *chimney* flue or vent, the openings shall be at different levels, or the connectors shall be attached to the vertical portion of the *chimney* or vent at an angle of 45 degrees (0.79 rad) or less relative to the vertical.

G2427.10.5 (503.10.5) Clearance. Minimum *clearances* from *vent connectors* to *combustible material* shall be in accordance with Table G2427.10.5.

Exception: The *clearance* between a *vent connector* and *combustible material* shall be permitted to be reduced where the *combustible material* is protected as specified for *vent connectors* in Table G2409.2.

G2427.10.6 (503.10.6) Joints. Joints between sections of connector *piping* and connections to *flue collars* and *draft hood* outlets shall be fastened by one of the following methods:

1. Sheet metal screws.
2. *Vent connectors* of *listed* vent material assembled and connected to *flue collars* or *draft hood* outlets in accordance with the manufacturers' instructions.
3. Other *approved* means.

G2427.10.7 (503.10.7) Slope. A *vent connector* shall be installed without dips or sags and shall slope upward toward the vent or *chimney* at least $^1/_4$ inch per foot (21 mm/m).

Exception: *Vent connectors* attached to a mechanical *draft* system installed in accordance with the *appliance* and *draft* system manufacturers' instructions.

G2427.10.8 (503.10.8) Length of vent connector. The maximum horizontal length of a single-wall connector shall be 75 percent of the height of the *chimney* or vent except for engineered systems. The maximum horizontal length of a Type B double-wall connector shall be 100 percent of the height of the *chimney* or vent except for engineered systems.

G2427.10.9 (503.10.9) Support. A *vent connector* shall be supported for the design and weight of the material employed to maintain *clearances* and prevent physical damage and separation of joints.

G2427.10.10 (503.10.10) Chimney connection. Where entering a flue in a masonry or metal *chimney*, the *vent connector* shall be installed above the extreme bottom to avoid stoppage. Where a thimble or slip joint is used to facilitate removal of the connector, the connector shall be firmly attached to or inserted into the thimble or slip joint to prevent the connector from falling out. Means shall be employed to prevent the connector from entering so far as to restrict the space between its end and the opposite wall of the *chimney* flue (see Section G2425.9).

G2427.10.11 (503.10.11) Inspection. The entire length of a *vent connector* shall be provided with *ready access* for inspection, cleaning and replacement.

G2427.10.12 (503.10.12) Fireplaces. A *vent connector* shall not be connected to a *chimney* flue serving a *fireplace* unless the *fireplace* flue opening is permanently sealed.

G2427.10.13 (503.10.13) Passage through ceilings, floors or walls. Single-wall metal pipe connectors shall not pass through any wall, floor or ceiling except as permitted by Section G2427.7.4.

TABLE G2427.10.5 (503.10.5)[a]
CLEARANCES FOR CONNECTORS

APPLIANCE	MINIMUM DISTANCE FROM COMBUSTIBLE MATERIAL			
	Listed Type B gas vent material	Listed Type L vent material	Single-wall metal pipe	Factory-built chimney sections
Listed appliances with draft hoods and appliances listed for use with Type B gas vents	As listed	As listed	6 inches	As listed
Residential boilers and furnaces with listed gas conversion burner and with draft hood	6 inches	6 inches	9 inches	As listed
Residential appliances listed for use with Type L vents	Not permitted	As listed	9 inches	As listed
Listed gas-fired toilets	Not permitted	As listed	As listed	As listed
Unlisted residential appliances with draft hood	Not permitted	6 inches	9 inches	As listed
Residential and low-heat appliances other than above	Not permitted	9 inches	18 inches	As listed
Medium-heat appliances	Not permitted	Not permitted	36 inches	As listed

For SI: 1 inch = 25.4 mm.

a. These clearances shall apply unless the manufacturer's installation instructions for a listed appliance or connector specify different clearances, in which case the listed clearances shall apply.

G2427.11 (503.11) Vent connectors for Category II, III and IV appliances. *Vent connectors* for Category II, III and IV *appliances* shall be as specified for the *venting systems* in accordance with Section G2427.4.

G2427.12 (503.12) Draft hoods and draft controls. The installation of *draft hoods* and draft controls shall comply with Sections G2427.12.1 through G2427.12.7.

G2427.12.1 (503.12.1) Appliances requiring draft hoods. *Vented appliances* shall be installed with *draft hoods*.

Exception: Dual oven-type combination ranges; *direct-vent appliances*; fan-assisted *combustion* system *appliances*; *appliances* requiring *chimney draft* for operation; single firebox boilers equipped with *conversion burners* with inputs greater than 400,000 *Btu* per hour (117 kW); *appliances* equipped with blast, power or pressure *burners* that are not *listed* for use with *draft hoods*; and *appliances* designed for forced venting.

G2427.12.2 (503.12.2) Installation. A *draft hood* supplied with or forming a part of a *listed vented appliance* shall be installed without *alteration*, exactly as furnished and specified by the *appliance* manufacturer.

G2427.12.2.1 (503.12.2.1) Draft hood required. If a *draft hood* is not supplied by the *appliance* manufacturer where one is required, a *draft hood* shall be installed, shall be of a *listed* or *approved* type and, in the absence of other instructions, shall be of the same size as the *appliance flue* collar. Where a *draft hood* is required with a *conversion burner*, it shall be of a *listed* or *approved* type.

G2427.12.2.2 (503.12.2.2) Special design draft hood. Where it is determined that a *draft hood* of special design is needed or preferable for a particular installation, the installation shall be in accordance with the recommendations of the *appliance* manufacturer and shall be *approved*.

G2427.12.3 (503.12.3) Draft control devices. Where a *draft control* device is part of the *appliance* or is supplied by the *appliance* manufacturer, it shall be installed in accordance with the manufacturer's instructions. In the absence of manufacturer's instructions, the device shall be attached to the *flue collar* of the *appliance* or as near to the *appliance* as practical.

G2427.12.4 (503.12.4) Additional devices. *Appliances* requiring a controlled *chimney draft* shall be permitted to be equipped with a *listed* double-acting barometric-*draft regulator* installed and adjusted in accordance with the manufacturer's instructions.

G2427.12.5 (503.12.5) Location. *Draft hoods* and *barometric draft regulators* shall be installed in the same room or enclosure as the *appliance* in such a manner as to prevent any difference in pressure between the hood or *regulator* and the *combustion air* supply.

G2427.12.6 (503.12.6) Positioning. *Draft hoods* and *draft regulators* shall be installed in the position for which they were designed with reference to the horizontal and vertical planes and shall be located so that the *relief opening* is not obstructed by any part of the *appliance* or adjacent construction. The *appliance* and its *draft hood* shall be located so that the *relief opening* is accessible for checking *vent* operation.

G2427.12.7 (503.12.7) Clearance. A *draft hood* shall be located so its *relief opening* is not less than 6 inches (152 mm) from any surface except that of the *appliance* it serves and the venting system to which the *draft hood* is connected. Where a greater or lesser *clearance* is indicated on the *appliance* label, the *clearance* shall be not less than that specified on the label. Such *clearances* shall not be reduced.

G2427.13 (503.13) Manually operated dampers. A manually operated *damper* shall not be placed in the vent *connector* for any *appliance*. Fixed baffles shall not be classified as manually operated *dampers*.

G2427.14 (503.14) Automatically operated vent dampers. An automatically operated vent damper shall be of a *listed* type.

G2427.15 (503.15) Obstructions. Devices that retard the flow of *vent gases* shall not be installed in a *vent connector*, *chimney*, or vent. The following shall not be considered as obstructions:

1. *Draft regulators* and safety *controls* specifically listed for installation in *venting systems* and installed in accordance with the manufacturer's instructions.
2. *Approved draft regulators* and safety *controls* that are designed and installed in accordance with *approved* engineering methods.
3. Listed heat reclaimers and automatically operated vent dampers installed in accordance with the manufacturer's instructions.
4. *Approved* economizers, heat reclaimers and recuperators installed in *venting systems* of *appliances* not required to be equipped with *draft hoods*, provided that the *appliance* manufacturer's instructions cover the installation of such a device in the venting system and performance in accordance with Sections G2427.3 and G2427.3.1 is obtained.
5. Vent dampers serving *listed appliances* installed in accordance with Sections G2428.2.1 and G2428.3.1 or other *approved* engineering methods.

G2427.16 (503.16) (IFGS) Outside wall penetrations. Where vents, including those for *direct-vent appliances*, penetrate outside walls of buildings, the annular spaces around such penetrations shall be permanently sealed using *approved* materials to prevent entry of *combustion products* into the building.

SECTION G2428 (504) SIZING OF CATEGORY I APPLIANCE VENTING SYSTEMS

G2428.1 (504.1) Definitions. The following definitions apply to the tables in this section.

APPLIANCE CATEGORIZED VENT DIAMETER/ AREA. The minimum vent area/diameter permissible for Category I *appliances* to maintain a nonpositive vent static pressure when tested in accordance with nationally recognized standards.

FAN-ASSISTED COMBUSTION SYSTEM. An *appliance* equipped with an integral mechanical means to either draw or force products of *combustion* through the *combustion chamber* or heat exchanger.

FAN Min. The minimum input rating of a Category I fan-assisted *appliance* attached to a vent or connector.

FAN Max. The maximum input rating of a Category I fan-assisted *appliance* attached to a vent or connector.

NAT Max. The maximum input rating of a Category I draft-hood-equipped *appliance* attached to a vent or connector.

FAN + FAN. The maximum combined *appliance* input rating of two or more Category I fan-assisted *appliances* attached to the common vent.

FAN + NAT. The maximum combined *appliance* input rating of one or more Category I fan-assisted *appliances* and one or more Category I draft-hood-equipped *appliances* attached to the common vent.

NA. Vent configuration is not permitted due to potential for *condensate* formation or pressurization of the venting system, or not applicable due to physical or geometric restraints.

NAT + NAT. The maximum combined *appliance* input rating of two or more Category I draft-hood-equipped *appliances* attached to the common vent.

G2428.2 (504.2) Application of single appliance vent Tables G2428.2(1) and G2428.2(2). The application of Tables G2428.2(1) and G2428.2(2) shall be subject to the requirements of Sections G2428.2.1 through G2428.2.17.

G2428.2.1 (504.2.1) Vent obstructions. These venting tables shall not be used where obstructions, as described in Section G2427.15, are installed in the venting system. The installation of vents serving *listed appliances* with vent dampers shall be in accordance with the *appliance* manufacturer's instructions or in accordance with the following:

1. The maximum capacity of the vent system shall be determined using the "NAT Max" column.
2. The minimum capacity shall be determined as if the *appliance* were a fan-assisted *appliance*, using the "FAN Min" column to determine the minimum capacity of the vent system. Where the corresponding "FAN Min" is "NA," the vent configuration shall not be permitted and an alternative venting configuration shall be utilized.

G2428.2.2 (504.2.2) Minimum size. Where the vent size determined from the tables is smaller than the *appliance draft hood outlet* or *flue collar*, the smaller size shall be permitted to be used provided all of the following requirements are met:

1. The total vent height (H) is at least 10 feet (3048 mm).
2. Vents for *appliance draft hood* outlets or *flue collars* 12 inches (305 mm) in diameter or smaller are not reduced more than one table size.
3. Vents for *appliance draft hood* outlets or *flue collars* larger than 12 inches (305 mm) in diameter are not reduced more than two table sizes.
4. The maximum capacity listed in the tables for a fan-assisted *appliance* is reduced by 10 percent (0.90 × maximum table capacity).
5. The *draft hood* outlet is greater than 4 inches (102 mm) in diameter. Do not connect a 3-inch-diameter (76 mm) vent to a 4-inch-diameter (102 mm) *draft hood* outlet. This provision shall not apply to fan-assisted *appliances*.

G2428.2.3 (504.2.3) Vent offsets. Single-*appliance* venting configurations with zero (0) lateral lengths in Tables G2428.2(1) and G2428.2(2) shall not have elbows in the *venting system*. Single-*appliance* venting configurations with lateral lengths include two 90-degree (1.57 rad) elbows. For each additional elbow up to and including 45 degrees (0.79 rad), the maximum capacity listed in the venting tables shall be reduced by 5 percent. For each additional elbow greater than 45 degrees (0.79 rad) up to and including 90 degrees (1.57 rad), the maximum capacity listed in the venting tables shall be reduced by 10 percent. Where multiple *offsets* occur in a vent, the total lateral length of all *offsets* combined shall not exceed that specified in Tables G2428.2(1) and G2428.2(2).

G2428.2.4 (504.2.4) Zero lateral. Zero (0) lateral (L) shall apply only to a straight vertical vent attached to a top outlet *draft hood* or *flue collar*.

G2428.2.5 (504.2.5) High-altitude installations. Sea-level input ratings shall be used when determining maximum capacity for high-altitude installation. Actual input, derated for altitude, shall be used for determining minimum capacity for high-altitude installation.

G2428.2.6 (504.2.6) Multiple input rate appliances. For *appliances* with more than one input rate, the minimum vent capacity (FAN Min) determined from the tables shall be less than the lowest *appliance* input rating, and the maximum vent capacity (FAN Max/NAT Max) determined from the tables shall be greater than the highest *appliance* rating input.

G2428.2.7 (504.2.7) Liner system sizing and connections. *Listed* corrugated metallic *chimney* liner systems in masonry *chimneys* shall be sized by using Table G2428.2(1) or G2428.2(2) for Type B vents with the maximum capacity reduced by 20 percent (0.80 × maximum capacity) and the minimum capacity as shown in Table G2428.2(1) or G2428.2(2). Corrugated metallic liner systems installed with bends or offsets shall have their maximum capacity further reduced in accordance with Section G2428.2.3. The 20-percent reduction for corrugated metallic *chimney* liner

systems includes an allowance for one long-radius 90-degree (1.57 rad) turn at the bottom of the liner.

Connections between *chimney* liners and listed double-wall connectors shall be made with listed adapters designed for such purpose.

G2428.2.8 (504.2.8) Vent area and diameter. Where the vertical vent has a larger diameter than the *vent connector*, the vertical vent diameter shall be used to determine the minimum vent capacity, and the connector diameter shall be used to determine the maximum vent capacity. The flow area of the vertical vent shall not exceed seven times the flow area of the listed *appliance* categorized vent area, *flue collar* area, or *draft hood* outlet area unless designed in accordance with *approved* engineering methods.

G2428.2.9 (504.2.9) Chimney and vent locations. Tables G2428.2(1) and G2428.2(2) shall be used only for chimneys and vents not exposed to the outdoors below the roof line. A Type B vent or listed chimney lining system passing through an unused masonry chimney flue shall not be considered to be exposed to the outdoors. Where vents extend outdoors above the roof more than 5 feet (1524 mm) higher than required by Figure G2427.6.3 and where vents terminate in accordance with Section G2427.6.3, Item 2, the outdoor portion of the vent shall be enclosed as required by this section for vents not considered to be exposed to the outdoors or such venting system shall be engineered. A Type B vent shall not be considered to be exposed to the outdoors where it passes through an unventilated enclosure or chase insulated to a value of not less than R8.

G2428.2.10 (504.2.10) Corrugated vent connector size. Corrugated *vent connectors* shall be not smaller than the listed *appliance* categorized *vent* diameter, *flue collar* diameter, or *draft hood* outlet diameter.

G2428.2.11 (504.2.11) Vent connector size limitation. *Vent connectors* shall not be increased in size more than two sizes greater than the listed *appliance* categorized vent diameter, *flue collar* diameter or *draft hood* outlet diameter.

G2428.2.12 (504.2.12) Component commingling. In a single run of vent or *vent connector*, different diameters and types of vent and connector components shall be permitted to be used, provided that all such sizes and types are permitted by the tables.

G2428.2.13 (504.2.13) Draft hood conversion accessories. *Draft hood* conversion accessories for use with *masonry chimneys* venting listed Category I fan-assisted *appliances* shall be listed and installed in accordance with the manufacturer's instructions for such listed accessories.

G2428.2.14 (504.2.14) Table interpolation. Interpolation shall be permitted in calculating capacities for vent dimensions that fall between the table entries.

G2428.2.15 (504.2.15) Extrapolation prohibited. Extrapolation beyond the table entries shall not be permitted.

G2428.2.16 (504.2.16) Engineering calculations. For *vent* heights less than 6 feet (1829 mm) and greater than shown in the tables, engineering methods shall be used to calculate *vent* capacities.

G2428.2.17 (504.2.17) Height entries. Where the actual height of a vent falls between entries in the height column of the applicable table in Tables G2428.2(1) and G2428.2(2), either interpolation shall be used or the lower appliance input rating shown in the table entries shall be used for FAN Max and NAT Max column values and the higher appliance input rating shall be used for the FAN MIN column values.

G2428.3 (504.3) Application of multiple appliance vent Tables G2428.3(1) through G2428.3(4). The application of Tables G2428.3(1) through G2428.3(4) shall be subject to the requirements of Sections G2428.3.1 through G2428.3.23.

G2428.3.1 (504.3.1) Vent obstructions. These venting tables shall not be used where obstructions, as described in Section G2427.15, are installed in the venting system. The installation of vents serving listed *appliances* with vent dampers shall be in accordance with the *appliance* manufacturer's instructions or in accordance with the following:

1. The maximum capacity of the *vent connector* shall be determined using the NAT Max column.
2. The maximum capacity of the vertical vent or *chimney* shall be determined using the FAN+NAT column when the second *appliance* is a fan-assisted *appliance*, or the NAT+NAT column when the second *appliance* is equipped with a *draft hood*.
3. The minimum capacity shall be determined as if the *appliance* were a fan-assisted *appliance*.
   - 3.1. The minimum capacity of the *vent connector* shall be determined using the FAN Min column.
   - 3.2. The FAN+FAN column shall be used when the second *appliance* is a fan-assisted *appliance*, and the FAN+NAT column shall be used when the second *appliance* is equipped with a *draft hood*, to determine whether the vertical vent or *chimney* configuration is not permitted (NA). Where the vent configuration is NA, the vent configuration shall not be permitted and an alternative venting configuration shall be utilized.

G2428.3.2 (504.3.2) Connector length limit. The *vent connector* shall be routed to the vent utilizing the shortest possible route. Except as provided in Section G2428.3.3, the maximum *vent connector* horizontal length shall be $1^1/_2$ feet for each inch (18 mm per mm) of connector diameter as shown in Table G2428.3.2.

TABLE G2428.3.2 (504.3.2)
MAXIMUM VENT CONNECTOR LENGTH

CONNECTOR DIAMETER (inches)	CONNECTOR MAXIMUM HORIZONTAL LENGTH (feet)
3	$4^1/_2$
4	6
5	$7^1/_2$
6	9
7	$10^1/_2$
8	12
9	$13^1/_2$

For SI: 1 inch = 25.4 mm, 1 foot = 304.8 mm.

G2428.3.3 (504.3.3) Connectors with longer lengths. Connectors with longer horizontal lengths than those listed in Section G2428.3.2 are permitted under the following conditions:

1. The maximum capacity (FAN Max or NAT Max) of the *vent connector* shall be reduced 10 percent for each additional multiple of the length allowed by Section G2428.3.2. For example, the maximum length listed in Table G2428.3.2 for a 4-inch (102 mm) connector is 6 feet (1829 mm). With a connector length greater than 6 feet (1829 mm) but not exceeding 12 feet (3658 mm), the maximum capacity must be reduced by 10 percent (0.90 × maximum vent *connector* capacity). With a connector length greater than 12 feet (3658 mm), but not exceeding 18 feet (5486 mm), the maximum capacity must be reduced by 20 percent (0.80 × maximum vent capacity).
2. For a connector serving a fan-assisted *appliance*, the minimum capacity (FAN Min) of the connector shall be determined by referring to the corresponding single-*appliance* table. For Type B double-wall connectors, Table G2428.2(1) shall be used. For single-wall connectors, Table G2428.2(2) shall be used. The height (*H*) and lateral (*L*) shall be measured according to the procedures for a single-*appliance* vent, as if the other *appliances* were not present.

G2428.3.4 (504.3.4) Vent connector manifold. Where the *vent connectors* are combined prior to entering the vertical portion of the common vent to form a common vent manifold, the size of the common vent manifold and the common vent shall be determined by applying a 10-percent reduction (0.90 × maximum common vent capacity) to the common vent capacity part of the common vent tables. The length of the common *vent connector* manifold (L_m) shall not exceed $1^1/_2$ feet for each inch (18 mm per mm) of common *vent connector* manifold diameter (*D*).

G2428.3.5 (504.3.5) Common vertical vent offset. Where the common vertical vent is *offset*, the maximum capacity of the common vent shall be reduced in accordance with Section G2428.3.6. The horizontal length of the common vent *offset* (L_o) shall not exceed $1^1/_2$ feet for each inch (18 mm per mm) of common vent diameter (*D*). Where multiple *offsets* occur in a common vent, the total horizontal length of all *offsets* combined shall not exceed $1^1/_2$ feet for each inch (18 mm/mm per) of the common vent diameter (*D*).

G2428.3.6 (504.3.6) Elbows in vents. For each elbow up to and including 45 degrees (0.79 rad) in the common vent, the maximum common vent capacity listed in the venting tables shall be reduced by 5 percent. For each elbow greater than 45 degrees (0.79 rad) up to and including 90 degrees (1.57 rad), the maximum common vent capacity listed in the venting tables shall be reduced by 10 percent.

G2428.3.7 (504.3.7) Elbows in connectors. The *vent connector* capacities listed in the common vent sizing tables include allowance for two 90-degree (1.57 rad) elbows. For each additional elbow up to and including 45 degrees (0.79 rad), the maximum *vent connector* capacity listed in the venting tables shall be reduced by 5 percent. For each elbow greater than 45 degrees (0.79 rad) up to and including 90 degrees (1.57 rad), the maximum *vent connector* capacity listed in the venting tables shall be reduced by 10 percent.

G2428.3.8 (504.3.8) Common vent minimum size. The cross-sectional area of the common vent shall be equal to or greater than the cross-sectional area of the largest connector.

G2428.3.9 (504.3.9) Common vent fittings. At the point where tee or wye fittings connect to a common vent, the opening size of the fitting shall be equal to the size of the common vent. Such fittings shall not be prohibited from having reduced-size openings at the point of connection of *appliance vent connectors*.

G2428.3.9.1 (504.3.9.1) Tee and wye fittings. Tee and wye fittings connected to a common gas vent shall be considered as part of the common gas vent and shall be constructed of materials consistent with that of the common gas vent.

G2428.3.10 (504.3.10) High-altitude installations. Sea-level input ratings shall be used when determining maximum capacity for high-altitude installation. Actual input, derated for altitude, shall be used for determining minimum capacity for high-altitude installation.

G2428.3.11 (504.3.11) Connector rise measurement. Connector rise (*R*) for each *appliance connector* shall be measured from the *draft hood* outlet or *flue collar* to the centerline where the vent gas streams come together.

G2428.3.12 (504.3.12) Vent height measurement. For multiple *appliances* all located on one floor, available total height (H) shall be measured from the highest *draft hood* outlet or *flue collar* up to the level of the outlet of the common vent.

G2428.3.13 (504.3.17) Vertical vent maximum size. Where two or more *appliances* are connected to a vertical vent or *chimney*, the flow area of the largest section of vertical vent or *chimney* shall not exceed seven times the smallest listed *appliance* categorized vent areas, *flue collar* area, or *draft hood* outlet area unless designed in accordance with *approved* engineering methods.

G2428.3.14 (504.3.18) Multiple input rate appliances. For *appliances* with more than one input rate, the minimum *vent connector* capacity (FAN Min) determined from the tables shall be less than the lowest *appliance* input rating, and the maximum *vent connector* capacity (FAN Max or NAT Max) determined from the tables shall be greater than the highest *appliance* input rating.

G2428.3.15 (504.3.19) Liner system sizing and connections. Listed, corrugated metallic *chimney* liner systems in masonry *chimneys* shall be sized by using Table G2428.3(1) or G2428.3(2) for Type B vents, with the maximum capacity reduced by 20 percent (0.80 × maximum capacity) and the minimum capacity as shown in Table G2428.3(1) or G2428.3(2). Corrugated metallic liner systems installed with bends or offsets shall have their maximum capacity further reduced in accordance with Sections G2428.3.5 and G2428.3.6. The 20-percent reduction for corrugated metallic *chimney* liner systems includes an allowance for one long-radius 90-degree (1.57 rad) turn at the bottom of the liner. Where double-wall connectors are required, tee and wye fittings used to connect to the common vent *chimney* liner shall be listed double-wall fittings. Connections between *chimney* liners and listed double-wall fittings shall be made with listed adapter fittings designed for such purpose.

G2428.3.16 (504.3.20) Chimney and vent location. Tables G2428.3(1), G2428.3(2), G2428.3(3) and G2428.3(4) shall be used only for chimneys and vents not exposed to the outdoors below the roof line. A Type B vent or *listed* chimney lining system passing through an unused masonry chimney flue shall not be considered to be exposed to the outdoors. Where vents extend outdoors above the roof more than 5 feet (1524 mm) higher than required by Figure G2427.6.3 and where vents terminate in accordance with Section G2427.6.3, Item 2, the outdoor portion of the vent shall be enclosed as required by this section for vents not considered to be exposed to the outdoors or such venting system shall be engineered. A Type B vent shall not be considered to be exposed to the outdoors where it passes through an unventilated enclosure or chase insulated to a value of not less than R8.

G2428.3.17 (504.3.21) Connector maximum and minimum size. *Vent connectors* shall not be increased in size more than two sizes greater than the listed *appliance* categorized vent diameter, *flue collar* diameter or *draft hood* outlet diameter. *Vent connectors* for draft-hood-equipped *appliances* shall not be smaller than the *draft hood* outlet diameter. Where a *vent connector* size(s) determined from the tables for a fan-assisted *appliance(s)* is smaller than the *flue collar* diameter, the use of the smaller size(s) shall be permitted provided that the installation complies with all of the following conditions:

1. *Vent connectors* for fan-assisted *appliance flue collars* 12 inches (305 mm) in diameter or smaller are not reduced by more than one table size [e.g., 12 inches to 10 inches (305 mm to 254 mm) is a one-size reduction] and those larger than 12 inches (305 mm) in diameter are not reduced more than two table sizes [e.g., 24 inches to 20 inches (610 mm to 508 mm) is a two-size reduction].
2. The fan-assisted *appliance(s)* is common vented with a draft-hood-equipped *appliance(s)*.
3. The vent *connector* has a smooth interior wall.

G2428.3.18 (504.3.22) Component commingling. All combinations of pipe sizes, single-wall and double-wall metal pipe shall be allowed within any connector run(s) or within the common vent, provided that all of the appropriate tables permit all of the desired sizes and types of pipe, as if they were used for the entire length of the subject connector or vent. Where single-wall and Type B double-wall metal pipes are used for *vent connectors* within the same venting system, the common vent must be sized using Table G2428.3(2) or G2428.3(4), as appropriate.

G2428.3.19 (504.3.23) Draft hood conversion accessories. *Draft hood* conversion accessories for use with *masonry chimneys* venting listed Category I fan-assisted *appliances* shall be listed and installed in accordance with the manufacturer's instructions for such listed accessories.

G2428.3.20 (504.3.24) Multiple sizes permitted. Where a table permits more than one diameter of pipe to be used for a connector or vent, all the permitted sizes shall be permitted to be used.

G2428.3.21 (504.3.25) Table interpolation. Interpolation shall be permitted in calculating capacities for vent dimensions that fall between table entries.

G2428.3.22 (504.3.26) Extrapolation prohibited. Extrapolation beyond the table entries shall not be permitted.

G2428.3.23 (504.3.27) Engineering calculations. For vent heights less than 6 feet (1829 mm) and greater than shown in the tables, engineering methods shall be used to calculate vent capacities.

G2428.3.24 (504.3.28) Height entries. Where the actual height of a vent falls between entries in the height column of the applicable table in Tables G2428.3(1) through G2428.3(4), either interpolation shall be used or the lower appliance input rating shown in the table shall be used for FAN Max and NAT Max column values and the higher appliance input rating shall be used for the FAN Min column values.

TABLE G2428.2(1) [504.2(1)]
TYPE B DOUBLE-WALL GAS VENT

Number of Appliances	Single
Appliance Type	Category I
Appliance Vent Connection	Connected directly to vent

HEIGHT (*H*) (feet)	LATERAL (*L*) (feet)	VENT DIAMETER—(*D*) inches																				
		3			4			5			6			7			8			9		
		APPLIANCE INPUT RATING IN THOUSANDS OF BTU/H																				
		FAN		NAT	FAN		NAT	FAN		NAT	FAN		NAT	FAN		NAT	FAN		NAT	FAN		NAT
		Min	Max	Max	Min	Max	Max	Min	Max	Max	Min	Max	Max	Min	Max	Max	Min	Max	Max	Min	Max	Max
6	0	0	78	46	0	152	86	0	251	141	0	375	205	0	524	285	0	698	370	0	897	470
	2	13	51	36	18	97	67	27	157	105	32	232	157	44	321	217	53	425	285	63	543	370
	4	21	49	34	30	94	64	39	153	103	50	227	153	66	316	211	79	419	279	93	536	362
	6	25	46	32	36	91	61	47	149	100	59	223	149	78	310	205	93	413	273	110	530	354
8	0	0	84	50	0	165	94	0	276	155	0	415	235	0	583	320	0	780	415	0	1,006	537
	2	12	57	40	16	109	75	25	178	120	28	263	180	42	365	247	50	483	322	60	619	418
	5	23	53	38	32	103	71	42	171	115	53	255	173	70	356	237	83	473	313	99	607	407
	8	28	49	35	39	98	66	51	164	109	64	247	165	84	347	227	99	463	303	117	596	396
10	0	0	88	53	0	175	100	0	295	166	0	447	255	0	631	345	0	847	450	0	1,096	585
	2	12	61	42	17	118	81	23	194	129	26	289	195	40	402	273	48	533	355	57	684	457
	5	23	57	40	32	113	77	41	187	124	52	280	188	68	392	263	81	522	346	95	671	446
	10	30	51	36	41	104	70	54	176	115	67	267	175	88	376	245	104	504	330	122	651	427
15	0	0	94	58	0	191	112	0	327	187	0	502	285	0	716	390	0	970	525	0	1,263	682
	2	11	69	48	15	136	93	20	226	150	22	339	225	38	475	316	45	633	414	53	815	544
	5	22	65	45	30	130	87	39	219	142	49	330	217	64	463	300	76	620	403	90	800	529
	10	29	59	41	40	121	82	51	206	135	64	315	208	84	445	288	99	600	386	116	777	507
	15	35	53	37	48	112	76	61	195	128	76	301	198	98	429	275	115	580	373	134	755	491
20	0	0	97	61	0	202	119	0	349	202	0	540	307	0	776	430	0	1,057	575	0	1,384	752
	2	10	75	51	14	149	100	18	250	166	20	377	249	33	531	346	41	711	470	50	917	612
	5	21	71	48	29	143	96	38	242	160	47	367	241	62	519	337	73	697	460	86	902	599
	10	28	64	44	38	133	89	50	229	150	62	351	228	81	499	321	95	675	443	112	877	576
	15	34	58	40	46	124	84	59	217	142	73	337	217	94	481	308	111	654	427	129	853	557
	20	48	52	35	55	116	78	69	206	134	84	322	206	107	464	295	125	634	410	145	830	537

(continued)

TABLE G2428.2(1) [504.2(1)]—continued
TYPE B DOUBLE-WALL GAS VENT

Number of Appliances	Single
Appliance Type	Category I
Appliance Vent Connection	Connected directly to vent

HEIGHT (*H*) (feet)	LATERAL (*L*) (feet)	VENT DIAMETER—(*D*) inches																				
		3			4			5			6			7			8			9		
		APPLIANCE INPUT RATING IN THOUSANDS OF BTU/H																				
		FAN		NAT	FAN		NAT	FAN		NAT	FAN		NAT	FAN		NAT	FAN		NAT	FAN		NAT
		Min	Max	Max	Min	Max	Max	Min	Max	Max	Min	Max	Max	Min	Max	Max	Min	Max	Max	Min	Max	Max
30	0	0	100	64	0	213	128	0	374	220	0	587	336	0	853	475	0	1,173	650	0	1,548	855
	2	9	81	56	13	166	112	14	283	185	18	432	280	27	613	394	33	826	535	42	1,072	700
	5	21	77	54	28	160	108	36	275	176	45	421	273	58	600	385	69	811	524	82	1,055	688
	10	27	70	50	37	150	102	48	262	171	59	405	261	77	580	371	91	788	507	107	1,028	668
	15	33	64	NA	44	141	96	57	249	163	70	389	249	90	560	357	105	765	490	124	1,002	648
	20	56	58	NA	53	132	90	66	237	154	80	374	237	102	542	343	119	743	473	139	977	628
	30	NA	NA	NA	73	113	NA	88	214	NA	104	346	219	131	507	321	149	702	444	171	929	594
50	0	0	101	67	0	216	134	0	397	232	0	633	363	0	932	518	0	1,297	708	0	1,730	952
	2	8	86	61	11	183	122	14	320	206	15	497	314	22	715	445	26	975	615	33	1,276	813
	5	20	82	NA	27	177	119	35	312	200	43	487	308	55	702	438	65	960	605	77	1,259	798
	10	26	76	NA	35	168	114	45	299	190	56	471	298	73	681	426	86	935	589	101	1,230	773
	15	59	70	NA	42	158	NA	54	287	180	66	455	288	85	662	413	100	911	572	117	1,203	747
	20	NA	NA	NA	50	149	NA	63	275	169	76	440	278	97	642	401	113	888	556	131	1,176	722
	30	NA	NA	NA	69	131	NA	84	250	NA	99	410	259	123	605	376	141	844	522	161	1,125	670

For SI: 1 inch = 25.4 mm, 1 foot = 304.8 mm, 1 British thermal unit per hour = 0.2931 W.

TABLE G2428.2(2) [504.2(2)]
TYPE B DOUBLE-WALL GAS VENT

Number of Appliances	Single
Appliance Type	Category I
Appliance Vent Connection	Single-wall metal connector

HEIGHT (*H*) (feet)	LATERAL (*L*) (feet)	VENT DIAMETER—(*D*) inches																											
		3			4			5			6			7			8			9			10			12			
		APPLIANCE INPUT RATING IN THOUSANDS OF BTU/H																											
		FAN		NAT	FAN		NAT	FAN		NAT	FAN		NAT	FAN		NAT	FAN		NAT	FAN		NAT	FAN		NAT	FAN		NAT
		Min	Max	Max	Min	Max	Max	Min	Max	Max	Min	Max	Max	Min	Max	Max	Min	Max	Max	Min	Max	Max	Min	Max	Max	Min	Max	Max
6	0	38	77	45	59	151	85	85	249	140	126	373	204	165	522	284	211	695	369	267	894	469	371	1,118	569	537	1,639	849
	2	39	51	36	60	96	66	85	156	104	123	231	156	159	320	213	201	423	284	251	541	368	347	673	453	498	979	648
	4	NA	NA	33	74	92	63	102	152	102	146	225	152	187	313	208	237	416	277	295	533	360	409	664	443	584	971	638
	6	NA	NA	31	83	89	60	114	147	99	163	220	148	207	307	203	263	409	271	327	526	352	449	656	433	638	962	627
8	0	37	83	50	58	164	93	83	273	154	123	412	234	161	580	319	206	777	414	258	1,002	536	360	1,257	658	521	1,852	967
	2	39	56	39	59	108	75	83	176	119	121	261	179	155	363	246	197	482	321	246	617	417	339	768	513	486	1,120	743
	5	NA	NA	37	77	102	69	107	168	114	151	252	171	193	352	235	245	470	311	305	604	404	418	754	500	598	1,104	730
	8	NA	NA	33	90	95	64	122	161	107	175	243	163	223	342	225	280	458	300	344	591	392	470	740	486	665	1,089	715
10	0	37	87	53	57	174	99	82	293	165	120	444	254	158	628	344	202	844	449	253	1,093	584	351	1,373	718	507	2,031	1,057
	2	39	61	41	59	117	80	82	193	128	119	287	194	153	400	272	193	531	354	242	681	456	332	849	559	475	1,242	848
	5	52	56	39	76	111	76	105	185	122	148	277	186	190	388	261	241	518	344	299	667	443	409	834	544	584	1,224	825
	10	NA	NA	34	97	100	68	132	171	112	188	261	171	237	369	241	296	497	325	363	643	423	492	808	520	688	1,194	788
15	0	36	93	57	56	190	111	80	325	186	116	499	283	153	713	388	195	966	523	244	1,259	681	336	1,591	838	488	2,374	1,237
	2	38	69	47	57	136	93	80	225	149	115	337	224	148	473	314	187	631	413	232	812	543	319	1,015	673	457	1,491	983
	5	51	63	44	75	128	86	102	216	140	144	326	217	182	459	298	231	616	400	287	795	526	392	997	657	562	1,469	963
	10	NA	NA	39	95	116	79	128	201	131	182	308	203	228	438	284	284	592	381	349	768	501	470	966	628	664	1,433	928
	15	NA	NA	NA	NA	NA	72	158	186	124	220	290	192	272	418	269	334	568	367	404	742	484	540	937	601	750	1,399	894
20	0	35	96	60	54	200	118	78	346	201	114	537	306	149	772	428	190	1,053	573	238	1,379	750	326	1,751	927	473	2,631	1,346
	2	37	74	50	56	148	99	78	248	165	113	375	248	144	528	344	182	708	468	227	914	611	309	1,146	754	443	1,689	1,098
	5	50	68	47	73	140	94	100	239	158	141	363	239	178	514	334	224	692	457	279	896	596	381	1,126	734	547	1,665	1,074
	10	NA	NA	41	93	129	86	125	223	146	177	344	224	222	491	316	277	666	437	339	866	570	457	1,092	702	646	1,626	1,037
	15	NA	NA	NA	NA	NA	80	155	208	136	216	325	210	264	469	301	325	640	419	393	838	549	526	1,060	677	730	1,587	1,005
	20	NA	NA	NA	NA	NA	NA	186	192	126	254	306	196	309	448	285	374	616	400	448	810	526	592	1,028	651	808	1,550	973

(continued)

TABLE G2428.2(2) [504.2(2)]—continued
TYPE B DOUBLE-WALL GAS VENT

Number of Appliances	Single
Appliance Type	Category I
Appliance Vent Connection	Single-wall metal connector

HEIGHT (*H*) (feet)	LATERAL (*L*) (feet)	VENT DIAMETER—(*D*) Inches																										
		3			4			5			6			7			8			9			10			12		
		APPLIANCE INPUT RATING IN THOUSANDS OF BTU/H																										
		FAN		NAT	FAN		NAT	FAN		NAT	FAN		NAT	FAN		NAT	FAN		NAT	FAN		NAT	FAN		NAT	FAN		NAT
		Min	Max	Max	Min	Max	Max	Min	Max	Max	Min	Max	Max	Min	Max	Max	Min	Max	Max	Min	Max	Max	Min	Max	Max	Min	Max	Max
30	0	34	99	63	53	211	127	76	372	219	110	584	334	144	849	472	184	1,168	647	229	1,542	852	312	1,971	1,056	454	2,996	1,545
	2	37	80	56	55	164	111	76	281	183	109	429	279	139	610	392	175	823	533	219	1,069	698	296	1,346	863	424	1,999	1,308
	5	49	74	52	72	157	106	98	271	173	136	417	271	171	595	382	215	806	521	269	1,049	684	366	1,324	846	524	1,971	1,283
	10	NA	NA	NA	91	144	98	122	255	168	171	397	257	213	570	367	265	777	501	327	1,017	662	440	1,287	821	620	1,927	1,234
	15	NA	NA	NA	115	131	NA	151	239	157	208	377	242	255	547	349	312	750	481	379	985	638	507	1,251	794	702	1,884	1,205
	20	NA	NA	NA	NA	NA	NA	181	223	NA	246	357	228	298	524	333	360	723	461	433	955	615	570	1,216	768	780	1,841	1,166
	30	NA	NA	NA	NA	NA	NA	NA	NA	NA	NA	NA	NA	389	477	305	461	670	426	541	895	574	704	1,147	720	937	1,759	1,101
50	0	33	99	66	51	213	133	73	394	230	105	629	361	138	928	515	176	1,292	704	220	1,724	948	295	2,223	1,189	428	3,432	1,818
	2	36	84	61	53	181	121	73	318	205	104	495	312	133	712	443	168	971	613	209	1,273	811	280	1,615	1,007	401	2,426	1,509
	5	48	80	NA	70	174	117	94	308	198	131	482	305	164	696	435	204	953	602	257	1,252	795	347	1,591	991	496	2,396	1,490
	10	NA	NA	NA	89	160	NA	118	292	186	162	461	292	203	671	420	253	923	583	313	1,217	765	418	1,551	963	589	2,347	1,455
	15	NA	NA	NA	112	148	NA	145	275	174	199	441	280	244	646	405	299	894	562	363	1,183	736	481	1,512	934	668	2,299	1,421
	20	NA	NA	NA	NA	NA	NA	176	257	NA	236	420	267	285	622	389	345	866	543	415	1,150	708	544	1,473	906	741	2,251	1,387
	30	NA	NA	NA	NA	NA	NA	NA	NA	NA	315	376	NA	373	573	NA	442	809	502	521	1,086	649	674	1,399	848	892	2,159	1,318

For SI:1 inch = 25.4 mm, 1 foot = 304.8 mm, 1 British thermal unit per hour = 0.2931 W.

TABLE G2428.3(1) [504.3(1)]
TYPE B DOUBLE-WALL VENT

Number of Appliances	Two or more
Appliances Type	Category I
Appliances Vent Connection	Single-wall metal connector

VENT CONNECTOR CAPACITY

VENT HEIGHT (*H*) (feet)	CONNECTOR RISE (*R*) (feet)	TYPE B DOUBLE-WALL VENT AND CONNECTOR DIAMETER—(*D*) inches																							
		3			4			5			6			7			8			9			10		
		APPLIANCE INPUT RATING LIMITS IN THOUSANDS OF BTU/H																							
		FAN		NAT	FAN		NAT	FAN		NAT	FAN		NAT	FAN		NAT	FAN		NAT	FAN		NAT	FAN		NAT
		Min	Max	Max	Min	Max	Max	Min	Max	Max	Min	Max	Max	Min	Max	Max	Min	Max	Max	Min	Max	Max	Min	Max	Max
6	1	22	37	26	35	66	46	46	106	72	58	164	104	77	225	142	92	296	185	109	376	237	128	466	289
	2	23	41	31	37	75	55	48	121	86	60	183	124	79	253	168	95	333	220	112	424	282	131	526	345
	3	24	44	35	38	81	62	49	132	96	62	199	139	82	275	189	97	363	248	114	463	317	134	575	386
8	1	22	40	27	35	72	48	49	114	76	64	176	109	84	243	148	100	320	194	118	408	248	138	507	303
	2	23	44	32	36	80	57	51	128	90	66	195	129	86	269	175	103	356	230	121	454	294	141	564	358
	3	24	47	36	37	87	64	53	139	101	67	210	145	88	290	198	105	384	258	123	492	330	143	612	402
10	1	22	43	28	34	78	50	49	123	78	65	189	113	89	257	154	106	341	200	125	436	257	146	542	314
	2	23	47	33	36	86	59	51	136	93	67	206	134	91	282	182	109	374	238	128	479	305	149	596	372
	3	24	50	37	37	92	67	52	146	104	69	220	150	94	303	205	111	402	268	131	515	342	152	642	417
15	1	21	50	30	33	89	53	47	142	83	64	220	120	88	298	163	110	389	214	134	493	273	162	609	333
	2	22	53	35	35	96	63	49	153	99	66	235	142	91	320	193	112	419	253	137	532	323	165	658	394
	3	24	55	40	36	102	71	51	163	111	68	248	160	93	339	218	115	445	286	140	565	365	167	700	444
20	1	21	54	31	33	99	56	46	157	87	62	246	125	86	334	171	107	436	224	131	552	285	158	681	347
	2	22	57	37	34	105	66	48	167	104	64	259	149	89	354	202	110	463	265	134	587	339	161	725	414
	3	23	60	42	35	110	74	50	176	116	66	271	168	91	371	228	113	486	300	137	618	383	164	764	466
30	1	20	62	33	31	113	59	45	181	93	60	288	134	83	391	182	103	512	238	125	649	305	151	802	372
	2	21	64	39	33	118	70	47	190	110	62	299	158	85	408	215	105	535	282	129	679	360	155	840	439
	3	22	66	44	34	123	79	48	198	124	64	309	178	88	423	242	108	555	317	132	706	405	158	874	494

COMMON VENT CAPACITY

VENT HEIGHT (*H*) (feet)	TYPE B DOUBLE-WALL COMMON VENT DIAMETER (*D*)—inches																				
	4			5			6			7			8			9			10		
	COMBINED APPLIANCE INPUT RATING IN THOUSANDS OF BTU/H																				
	FAN +FAN	FAN +NAT	NAT +NAT	FAN +FAN	FAN +NAT	NAT +NAT	FAN +FAN	FAN +NAT	NAT +NAT	FAN +FAN	FAN +NAT	NAT +NAT	FAN +FAN	FAN +NAT	NAT +NAT	FAN +FAN	FAN +NAT	NAT +NAT	FAN +FAN	FAN +NAT	NAT +NAT
6	92	81	65	140	116	103	204	161	147	309	248	200	404	314	260	547	434	335	672	520	410
8	101	90	73	155	129	114	224	178	163	339	275	223	444	348	290	602	480	378	740	577	465
10	110	97	79	169	141	124	243	194	178	367	299	242	477	377	315	649	522	405	800	627	495
15	125	112	91	195	164	144	283	228	206	427	352	280	556	444	365	753	612	465	924	733	565
20	136	123	102	215	183	160	314	255	229	475	394	310	621	499	405	842	688	523	1,035	826	640
30	152	138	118	244	210	185	361	297	266	547	459	360	720	585	470	979	808	605	1,209	975	740
50	167	153	134	279	244	214	421	353	310	641	547	423	854	706	550	1,164	977	705	1,451	1,188	860

For SI: 1 inch = 25.4 mm, 1 foot = 304.8 mm, 1 British thermal unit per hour = 0.2931 W.

TABLE G2428.3(2) [504.3(2)]
TYPE B DOUBLE-WALL VENT

Number of Appliances	Two or more
Appliances Type	Category I
Appliances Vent Connection	Type B double-wall connector

VENT CONNECTOR CAPACITY

VENT HEIGHT (*H*) (feet)	CONNECTOR RISE (*R*) (feet)	SINGLE-WALL METAL VENT CONNECTOR DIAMETER—(*D*) inches																							
		3			4			5			6			7			8			9			10		
		APPLIANCE INPUT RATING LIMITS IN THOUSANDS OF BTU/H																							
		FAN		NAT	FAN		NAT	FAN		NAT	FAN		NAT	FAN		NAT	FAN		NAT	FAN		NAT	FAN		NAT
		Min	Max	Max	Min	Max	Max	Min	Max	Max	Min	Max	Max	Min	Max	Max	Min	Max	Max	Min	Max	Max	Min	Max	Max
6	1	NA	NA	26	NA	NA	46	NA	NA	71	NA	NA	102	207	223	140	262	293	183	325	373	234	447	463	286
	2	NA	NA	31	NA	NA	55	NA	NA	85	168	182	123	215	251	167	271	331	219	334	422	281	458	524	344
	3	NA	NA	34	NA	NA	62	121	131	95	175	198	138	222	273	188	279	361	247	344	462	316	468	574	385
8	1	NA	NA	27	NA	NA	48	NA	NA	75	NA	NA	106	226	240	145	285	316	191	352	403	244	481	502	299
	2	NA	NA	32	NA	NA	57	125	126	89	184	193	127	234	266	173	293	353	228	360	450	292	492	560	355
	3	NA	NA	35	NA	NA	64	130	138	100	191	208	144	241	287	197	302	381	256	370	489	328	501	609	400
10	1	NA	NA	28	NA	NA	50	119	121	77	182	186	110	240	253	150	302	335	196	372	429	252	506	534	308
	2	NA	NA	33	84	85	59	124	134	91	189	203	132	248	278	183	311	369	235	381	473	302	517	589	368
	3	NA	NA	36	89	91	67	129	144	102	197	217	148	257	299	203	320	398	265	391	511	339	528	637	413
15	1	NA	NA	29	79	87	52	116	138	81	177	214	116	238	291	158	312	380	208	397	482	266	556	596	324
	2	NA	NA	34	83	94	62	121	150	97	185	230	138	246	314	189	321	411	248	407	522	317	568	646	387
	3	NA	NA	39	87	100	70	127	160	109	193	243	157	255	333	215	331	438	281	418	557	360	579	690	437
20	1	49	56	30	78	97	54	115	152	84	175	238	120	233	325	165	306	425	217	390	538	276	546	664	336
	2	52	59	36	82	103	64	120	163	101	182	252	144	243	346	197	317	453	259	400	574	331	558	709	403
	3	55	62	40	87	107	72	125	172	113	190	264	164	252	363	223	326	476	294	412	607	375	570	750	457
30	1	47	60	31	77	110	57	112	175	89	169	278	129	226	380	175	296	497	230	378	630	294	528	779	358
	2	51	62	37	81	115	67	117	185	106	177	290	152	236	397	208	307	521	274	389	662	349	541	819	425
	3	54	64	42	85	119	76	122	193	120	185	300	172	244	412	235	316	542	309	400	690	394	555	855	482

COMMON VENT CAPACITY

VENT HEIGHT (*H*) (feet)	TYPE B DOUBLE-WALL COMMON VENT DIAMETER—(*D*) inches																				
	4			5			6			7			8			9			10		
	COMBINED APPLIANCE INPUT RATING IN THOUSANDS OF BTU/H																				
	FAN +FAN	FAN +NAT	NAT +NAT	FAN +FAN	FAN +NAT	NAT +NAT	FAN +FAN	FAN +NAT	NAT +NAT	FAN +FAN	FAN +NAT	NAT +NAT	FAN +FAN	FAN +NAT	NAT +NAT	FAN +FAN	FAN +NAT	NAT +NAT	FAN +FAN	FAN +NAT	NAT +NAT
6	NA	78	64	NA	113	99	200	158	144	304	244	196	398	310	257	541	429	332	665	515	407
8	NA	87	71	NA	126	111	218	173	159	331	269	218	436	342	285	592	473	373	730	569	460
10	NA	94	76	163	137	120	237	189	174	357	292	236	467	369	309	638	512	398	787	617	487
15	121	108	88	189	159	140	275	221	200	416	343	274	544	434	357	738	599	456	905	718	553
20	131	118	98	208	177	156	305	247	223	463	383	302	606	487	395	824	673	512	1,013	808	626
30	145	132	113	236	202	180	350	286	257	533	446	349	703	570	459	958	790	593	1,183	952	723
50	159	145	128	268	233	208	406	337	296	622	529	410	833	686	535	1,139	954	689	1,418	1,157	838

For SI: 1 inch = 25.4 mm, 1 foot = 304.8 mm, 1 British thermal unit per hour = 0.2931 W.

TABLE G2428.3(3) [504.3(3)] MASONRY CHIMNEY

Number of Appliances	Two or more
Appliances Type	Category I
Appliances Vent Connection	Type B double-wall connector

VENT CONNECTOR CAPACITY

VENT HEIGHT (*H*) (feet)	CONNECTOR RISE (*R*) (feet)	TYPE B DOUBLE-WALL VENT CONNECTOR DIAMETER—(*D*) inches																							
		3			4			5			6			7			8			9			10		
		APPLIANCE INPUT RATING LIMITS IN THOUSANDS OF BTU/H																							
		FAN		NAT	FAN		NAT	FAN		NAT	FAN		NAT	FAN		NAT	FAN		NAT	FAN		NAT	FAN		NAT
		Min	Max	Max	Min	Max	Max	Min	Max	Max	Min	Max	Max	Min	Max	Max	Min	Max	Max	Min	Max	Max	Min	Max	Max
6	1	24	33	21	39	62	40	52	106	67	65	194	101	87	274	141	104	370	201	124	479	253	145	599	319
	2	26	43	28	41	79	52	53	133	85	67	230	124	89	324	173	107	436	232	127	562	300	148	694	378
	3	27	49	34	42	92	61	55	155	97	69	262	143	91	369	203	109	491	270	129	633	349	151	795	439
8	1	24	39	22	39	72	41	55	117	69	71	213	105	94	304	148	113	414	210	134	539	267	156	682	335
	2	26	47	29	40	87	53	57	140	86	73	246	127	97	350	179	116	473	240	137	615	311	160	776	394
	3	27	52	34	42	97	62	59	159	98	75	269	145	99	383	206	119	517	276	139	672	358	163	848	452
10	1	24	42	22	38	80	42	55	130	71	74	232	108	101	324	153	120	444	216	142	582	277	165	739	348
	2	26	50	29	40	93	54	57	153	87	76	261	129	103	366	184	123	498	247	145	652	321	168	825	407
	3	27	55	35	41	105	63	58	170	100	78	284	148	106	397	209	126	540	281	147	705	366	171	893	463
15	1	24	48	23	38	93	44	54	154	74	72	277	114	100	384	164	125	511	229	153	658	297	184	824	375
	2	25	55	31	39	105	55	56	174	89	74	299	134	103	419	192	128	558	260	156	718	339	187	900	432
	3	26	59	35	41	115	64	57	189	102	76	319	153	105	448	215	131	597	292	159	760	382	190	960	486
20	1	24	52	24	37	102	46	53	172	77	71	313	119	98	437	173	123	584	239	150	752	312	180	943	397
	2	25	58	31	39	114	56	55	190	91	73	335	138	101	467	199	126	625	270	153	805	354	184	1,011	452
	3	26	63	35	40	123	65	57	204	104	75	353	157	104	493	222	129	661	301	156	851	396	187	1,067	505

COMMON VENT CAPACITY

VENT HEIGHT (*H*) (feet)	MINIMUM INTERNAL AREA OF MASONRY CHIMNEY FLUE (square inches)																							
	12			19			28			38			50			63			78			113		
	COMBINED APPLIANCE INPUT RATING IN THOUSANDS OF BTU/H																							
	FAN +FAN	FAN +NAT	NAT +NAT	FAN +FAN	FAN +NAT	NAT +NAT	FAN +FAN	FAN +NAT	NAT +NAT	FAN +FAN	FAN +NAT	NAT +NAT	FAN +FAN	FAN +NAT	NAT +NAT	FAN +FAN	FAN +NAT	NAT +NAT	FAN +FAN	FAN +NAT	NAT +NAT	FAN +FAN	FAN +NAT	NAT +NAT
6	NA	74	25	NA	119	46	NA	178	71	NA	257	103	NA	351	143	NA	458	188	NA	582	246	1,041	853	NA
8	NA	80	28	NA	130	53	NA	193	82	NA	279	119	NA	384	163	NA	501	218	724	636	278	1,144	937	408
10	NA	84	31	NA	138	56	NA	207	90	NA	299	131	NA	409	177	606	538	236	776	686	302	1,226	1,010	454
15	NA	NA	36	NA	152	67	NA	233	106	NA	334	152	523	467	212	682	611	283	874	781	365	1,374	1,156	546
20	NA	NA	41	NA	NA	75	NA	250	122	NA	368	172	565	508	243	742	668	325	955	858	419	1,513	1,286	648
30	NA	NA	NA	NA	NA	NA	NA	270	137	NA	404	198	615	564	278	816	747	381	1,062	969	496	1,702	1,473	749
50	NA	NA	NA	NA	NA	NA	NA	NA	NA	NA	NA	NA	NA	620	328	879	831	461	1,165	1,089	606	1,905	1,692	922

For SI: 1 inch = 25.4 mm, 1 square inch = 645.16 mm^2, 1 foot = 304.8 mm, 1 British thermal unit per hour = 0.2931 W.

TABLE G2428.3(4) [504.3(4)]
MASONRY CHIMNEY

Number of Appliances	Two or more
Appliances Type	Category I
Appliances Vent Connection	Single-wall connector

VENT CONNECTOR CAPACITY

VENT HEIGHT (*H*) (feet)	CONNECTOR RISE (*R*) (feet)	SINGLE-WALL METAL VENT CONNECTOR DIAMETER (*D*)—inches																							
		3			4			5			6			7			8			9			10		
		APPLIANCE INPUT RATING LIMITS IN THOUSANDS OF BTU/H																							
		FAN		NAT	FAN		NAT	FAN		NAT	FAN		NAT	FAN		NAT	FAN		NAT	FAN		NAT	FAN		NAT
		Min	Max	Max	Min	Max	Max	Min	Max	Max	Min	Max	Max	Min	Max	Max	Min	Max	Max	Min	Max	Max	Min	Max	Max
6	1	NA	NA	21	NA	NA	39	NA	NA	66	179	191	100	231	271	140	292	366	200	362	474	252	499	594	316
	2	NA	NA	28	NA	NA	52	NA	NA	84	186	227	123	239	321	172	301	432	231	373	557	299	509	696	376
	3	NA	NA	34	NA	NA	61	134	153	97	193	258	142	247	365	202	309	491	269	381	634	348	519	793	437
8	1	NA	NA	21	NA	NA	40	NA	NA	68	195	208	103	250	298	146	313	407	207	387	530	263	529	672	331
	2	NA	NA	28	NA	NA	52	137	139	85	202	240	125	258	343	177	323	465	238	397	607	309	540	766	391
	3	NA	NA	34	NA	NA	62	143	156	98	210	264	145	266	376	205	332	509	274	407	663	356	551	838	450
10	1	NA	NA	22	NA	NA	41	130	151	70	202	225	106	267	316	151	333	434	213	410	571	273	558	727	343
	2	NA	NA	29	NA	NA	53	136	150	86	210	255	128	276	358	181	343	489	244	420	640	317	569	813	403
	3	NA	NA	34	97	102	62	143	166	99	217	277	147	284	389	207	352	530	279	430	694	363	580	880	459
15	1	NA	NA	23	NA	NA	43	129	151	73	199	271	112	268	376	161	349	502	225	445	646	291	623	808	366
	2	NA	NA	30	92	103	54	135	170	88	207	295	132	277	411	189	359	548	256	456	706	334	634	884	424
	3	NA	NA	34	96	112	63	141	185	101	215	315	151	286	439	213	368	586	289	466	755	378	646	945	479
20	1	NA	NA	23	87	99	45	128	167	76	197	303	117	265	425	169	345	569	235	439	734	306	614	921	347
	2	NA	NA	30	91	111	55	134	185	90	205	325	136	274	455	195	355	610	266	450	787	348	627	986	443
	3	NA	NA	35	96	119	64	140	199	103	213	343	154	282	481	219	365	644	298	461	831	391	639	1,042	496

COMMON VENT CAPACITY

VENT HEIGHT (*H*) (feet)	MINIMUM INTERNAL AREA OF MASONRY CHIMNEY FLUE (square inches)																							
	12			19			28			38			50			63			78			113		
	COMBINED APPLIANCE INPUT RATING IN THOUSANDS OF BTU/H																							
	FAN +FAN	FAN +NAT	NAT +NAT	FAN +FAN	FAN +NAT	NAT +NAT	FAN +FAN	FAN +NAT	NAT +NAT	FAN +FAN	FAN +NAT	NAT +NAT	FAN +FAN	FAN +NAT	NAT +NAT	FAN +FAN	FAN +NAT	NAT +NAT	FAN +FAN	FAN +NAT	NAT +NAT	FAN +FAN	FAN +NAT	NAT +NAT
6	NA	NA	25	NA	118	45	NA	176	71	NA	255	102	NA	348	142	NA	455	187	NA	579	245	NA	846	NA
8	NA	NA	28	NA	128	52	NA	190	81	NA	276	118	NA	380	162	NA	497	217	NA	633	277	1,136	928	405
10	NA	NA	31	NA	136	56	NA	205	89	NA	295	129	NA	405	175	NA	532	234	171	680	300	1,216	1,000	450
15	NA	NA	36	NA	NA	66	NA	230	105	NA	335	150	NA	400	210	677	602	280	866	772	360	1,359	1,139	540
20	NA	NA	NA	NA	NA	74	NA	247	120	NA	362	170	NA	503	240	765	661	321	947	849	415	1,495	1,264	640
30	NA	NA	NA	NA	NA	NA	NA	NA	135	NA	398	195	NA	558	275	808	739	377	1,052	957	490	1,682	1,447	740
50	NA	NA	NA	NA	NA	NA	NA	NA	NA	NA	NA	NA	NA	612	325	NA	821	456	1,152	1,076	600	1,879	1,672	910

For SI: 1 inch = 25.4 mm, 1 square inch = 645.16 mm^2, 1 foot = 304.8 mm, 1 British thermal unit per hour = 0.2931 W.

SECTION G2429 (505) DIRECT-VENT, INTEGRAL VENT, MECHANICAL VENT AND VENTILATION/EXHAUST HOOD VENTING

G2429.1 (505.1) General. The installation of direct-vent and integral vent *appliances* shall be in accordance with Section G2427. Mechanical *venting systems* shall be designed and installed in accordance with Section G2427.

SECTION G2430 (506) FACTORY-BUILT CHIMNEYS

G2430.1 (506.1) Listing. Factory-built *chimneys* for building heating *appliances* producing *flue gases* having a temperature not greater than 1,000°F (538°C), measured at the entrance to the *chimney*, shall be listed and *labeled* in accordance with UL 103 and shall be installed and terminated in accordance with the manufacturer's instructions.

G2430.2 (506.2) Support. Where factory-built *chimneys* are supported by structural members, such as joists and rafters, such members shall be designed to support the additional load.

SECTION G2431 (601) GENERAL

G2431.1 (601.1) Scope. Sections G2432 through G2454 shall govern the approval, design, installation, construction, maintenance, *alteration* and repair of the *appliances* and *equipment* specifically identified herein.

SECTION G2432 (602) DECORATIVE APPLIANCES FOR INSTALLATION IN FIREPLACES

G2432.1 (602.1) General. Decorative *appliances* for installation in *approved* solid fuel-burning *fireplaces* shall be tested in accordance with ANSI Z21.60 and shall be installed in accordance with the manufacturer's instructions. Manually lighted natural gas decorative *appliances* shall be tested in accordance with ANSI Z21.84.

G2432.2 (602.2) Flame safeguard device. Decorative *appliances* for installation in *approved* solid fuel-burning *fireplaces*, with the exception of those tested in accordance with ANSI Z21.84, shall utilize a direct ignition device, an ignitor or a *pilot* flame to ignite the fuel at the *main burner*, and shall be equipped with a *flame safeguard* device. The *flame safeguard* device shall automatically shut off the fuel supply to a *main burner* or group of *burners* when the means of ignition of such *burners* becomes inoperative.

G2432.3 (602.3) Prohibited installations. Decorative *appliances* for installation in *fireplaces* shall not be installed where prohibited by Section G2406.2.

SECTION G2433 (603) LOG LIGHTERS

G2433.1 (603.1) General. Log lighters shall be tested in accordance with CSA 8 and shall be installed in accordance with the manufacturer's instructions.

SECTION G2434 (604) VENTED GAS FIREPLACES (DECORATIVE APPLIANCES)

G2434.1 (604.1) General. Vented gas *fireplaces* shall be tested in accordance with ANSI Z21.50, shall be installed in accordance with the manufacturer's instructions and shall be designed and equipped as specified in Section G2432.2.

G2434.2 (604.2) Access. Panels, grilles and access doors that are required to be removed for normal servicing operations shall not be attached to the building.

SECTION G2435 (605) VENTED GAS FIREPLACE HEATERS

G2435.1 (605.1) General. Vented gas *fireplace* heaters shall be installed in accordance with the manufacturer's instructions, shall be tested in accordance with ANSI Z21.88 and shall be designed and equipped as specified in Section G2432.2.

SECTION G2436 (608) VENTED WALL FURNACES

G2436.1 (608.1) General. *Vented wall furnaces* shall be tested in accordance with ANSI Z21.86/CSA 2.32 and shall be installed in accordance with the manufacturer's instructions.

G2436.2 (608.2) Venting. *Vented wall furnaces* shall be vented in accordance with Section G2427.

G2436.3 (608.3) Location. *Vented wall furnaces* shall be located so as not to cause a fire hazard to walls, floors, combustible furnishings or doors. *Vented wall furnaces* installed between bathrooms and adjoining rooms shall not circulate air from bathrooms to other parts of the building.

G2436.4 (608.4) Door swing. *Vented wall furnaces* shall be located so that a door cannot swing within 12 inches (305 mm) of an air inlet or air outlet of such *furnace* measured at right angles to the opening. Doorstops or door closers shall not be installed to obtain this *clearance*.

G2436.5 (608.5) Ducts prohibited. Ducts shall not be attached to wall *furnaces*. Casing extension boots shall not be installed unless listed as part of the *appliance*.

G2436.6 (608.6) Access. *Vented wall furnaces* shall be provided with *access* for cleaning of heating surfaces, removal of *burners*, replacement of sections, motors, *controls*, filters and other working parts, and for adjustments and lubrication of parts requiring such attention. Panels, grilles and access doors

that are required to be removed for normal servicing operations shall not be attached to the building construction.

SECTION G2437 (609) FLOOR FURNACES

G2437.1 (609.1) General. *Floor furnaces* shall be tested in accordance with ANSI Z21.86/CSA 2.32 and shall be installed in accordance with the manufacturer's instructions.

G2437.2 (609.2) Placement. The following provisions apply to *floor furnaces*:

1. Floors. *Floor furnaces* shall not be installed in the floor of any doorway, stairway landing, aisle or passageway of any enclosure, public or private, or in an exitway from any such room or space.
2. Walls and corners. The register of a *floor furnace* with a horizontal warm air outlet shall not be placed closer than 6 inches (152 mm) to the nearest wall. A distance of at least 18 inches (457 mm) from two adjoining sides of the *floor furnace* register to walls shall be provided to eliminate the necessity of occupants walking over the warm-air discharge. The remaining sides shall be permitted to be placed not closer than 6 inches (152 mm) to a wall. Wall-register models shall not be placed closer than 6 inches (152 mm) to a corner.
3. Draperies. The *furnace* shall be placed so that a door, drapery, or similar object cannot be nearer than 12 inches (305 mm) to any portion of the register of the *furnace*.
4. Floor construction. *Floor furnaces* shall not be installed in concrete floor construction built on grade.
5. *Thermostat.* The controlling *thermostat* for a *floor furnace* shall be located within the same room or space as the *floor furnace* or shall be located in an adjacent room or space that is permanently open to the room or space containing the *floor furnace*.

G2437.3 (609.3) Bracing. The floor around the *furnace* shall be braced and headed with a support framework designed in accordance with Chapter 5.

G2437.4 (609.4) Clearance. The lowest portion of the *floor furnace* shall have not less than a 6-inch (152 mm) *clearance* from the grade level; except where the lower 6-inch (152 mm) portion of the *floor furnace* is sealed by the manufacturer to prevent entrance of water, the minimum *clearance* shall be reduced to not less than 2 inches (51 mm). Where such *clearances* cannot be provided, the ground below and to the sides shall be excavated to form a pit under the *furnace* so that the required *clearance* is provided beneath the lowest portion of the *furnace*. A 12-inch (305 mm) minimum clearance shall be provided on all sides except the *control* side, which shall have an 18-inch (457 mm) minimum *clearance*.

G2437.5 (609.5) First floor installation. Where the basement story level below the floor in which a *floor furnace* is installed is utilized as habitable space, such *floor furnaces* shall be enclosed as specified in Section G2437.6 and shall project into a nonhabitable space.

G2437.6 (609.6) Upper floor installations. *Floor furnaces* installed in upper stories of buildings shall project below into nonhabitable space and shall be separated from the nonhabitable space by an enclosure constructed of *noncombustible materials*. The *floor furnace* shall be provided with *access*, *clearance* to all sides and bottom of not less than 6 inches (152 mm) and *combustion air* in accordance with Section G2407.

SECTION G2438 (613) CLOTHES DRYERS

G2438.1 (613.1) General. *Clothes dryers* shall be tested in accordance with ANSI Z21.5.1 and shall be installed in accordance with the manufacturer's instructions.

SECTION G2439 (614) CLOTHES DRYER EXHAUST

G2439.1 (614.1) Installation. *Clothes dryers* shall be exhausted in accordance with the manufacturer's instructions. Dryer exhaust systems shall be independent of all other systems and shall convey the moisture and any products of *combustion* to the outside of the building.

G2439.2 (614.2) Duct penetrations. Ducts that exhaust *clothes dryers* shall not penetrate or be located within any fireblocking, draftstopping or any wall, floor/ceiling or other assembly required by this *code* to be fire-resistance rated, unless such duct is constructed of galvanized steel or aluminum of the thickness specified in the mechanical provisions of this *code* and the fire-resistance rating is maintained in accordance with this *code*. Fire dampers shall not be installed in *clothes dryer* exhaust duct systems.

G2439.3 (614.4) Exhaust installation. Exhaust ducts for *clothes dryers* shall terminate on the outside of the building and shall be equipped with a backdraft *damper*. Screens shall not be installed at the duct termination. Ducts shall not be connected or installed with sheet metal screws or other fasteners that will obstruct the flow. *Clothes dryer* exhaust ducts shall not be connected to a *vent connector*, vent or *chimney*. *Clothes dryer* exhaust ducts shall not extend into or through ducts or plenums.

G2439.4 (614.5) Dryer exhaust duct power ventilators. Domestic dryer exhaust duct power ventilators shall be listed and labeled to UL 705 for use in dryer exhaust duct systems. The dryer exhaust duct power ventilator shall be installed in accordance with the manufacturer's instructions.

G2439.5 (614.6) Makeup air. Installations exhausting more than 200 cfm (0.09 m^3/s) shall be provided with *makeup air*. Where a closet is designed for the installation of a *clothes dryer*, an opening having an area of not less than 100 square inches (0.0645 m^2) for *makeup air* shall be provided in the closet enclosure, or *makeup air* shall be provided by other *approved* means.

G2439.6 (614.7) Protection required. Protective shield plates shall be placed where nails or screws from finish or other work are likely to penetrate the *clothes dryer* exhaust duct. Shield plates shall be placed on the finished face of all

framing members where there is less than $1^1/_4$ inches (32 mm) between the duct and the finished face of the framing member. Protective shield plates shall be constructed of steel, shall have a minimum thickness of 0.062 inch (1.6 mm) and shall extend a minimum of 2 inches (51 mm) above sole plates and below top plates.

G2439.7 (614.8) Domestic clothes dryer exhaust ducts. Exhaust ducts for domestic *clothes dryers* shall conform to the requirements of Sections G2439.7.1 through G2439.7.6.

G2439.7.1 (614.8.1) Material and size. Exhaust ducts shall have a smooth interior finish and shall be constructed of metal a minimum 0.016-inch (0.4 mm) thick. The exhaust duct size shall be 4 inches (102 mm) nominal in diameter.

G2439.7.2 (614.8.2) Duct installation. Exhaust ducts shall be supported at 4-foot (1219 mm) intervals and secured in place. The insert end of the duct shall extend into the adjoining duct or fitting in the direction of airflow. Ducts shall not be joined with screws or similar fasteners that protrude more than $^1/_8$ inch (3.2 mm) into the inside of the duct.

G2439.7.3 (614.8.3) Transition ducts. Transition ducts used to connect the dryer to the exhaust duct system shall be a single length that is *listed* and *labeled* in accordance with UL 2158A. Transition ducts shall be not more than 8 feet (2438 mm) in length and shall not be concealed within construction.

G2439.7.4 (614.8.4) Duct length. The maximum allowable exhaust duct length shall be determined by one of the methods specified in Sections G2439.7.4.1 through G2439.7.4.3.

G2439.7.4.1 (614.8.4.1) Specified length. The maximum length of the exhaust duct shall be 35 feet (10 668 mm) from the connection to the transition duct from the dryer to the outlet terminal. Where fittings are used, the maximum length of the exhaust duct shall be reduced in accordance with Table G2439.7.4.1.

TABLE G2439.7.4.1 (TABLE 614.8.4.1)
DRYER EXHAUST DUCT FITTING EQUIVALENT LENGTH

DRYER EXHAUST DUCT FITTING TYPE	EQUIVALENT LENGTH
4 inch radius mitered 45-degree elbow	2 feet, 6 inches
4 inch radius mitered 90-degree elbow	5 feet
6 inch radius smooth 45-degree elbow	1 foot
6 inch radius smooth 90-degree elbow	1 foot, 9 inches
8 inch radius smooth 45-degree elbow	1 foot
8 inch radius smooth 90-degree elbow	1 foot, 7 inches
10 inch radius smooth 45-degree elbow	9 inches
10 inch radius smooth 90-degree elbow	1 foot, 6 inches

For SI: 1 inch = 25.4 mm, 1 foot = 304.8 mm, 1 degree = 0.0175 rad.

G2439.7.4.2 (614.8.4.2) Manufacturer's instructions. The maximum length of the exhaust duct shall be determined by the dryer manufacturer's installation instructions. The *code official* shall be provided with a copy of the installation instructions for the make and model of the dryer. Where the exhaust duct is to be concealed, the installation instructions shall be provided to the *code official* prior to the concealment inspection. In the absence of fitting equivalent length calculations from the clothes dryer manufacturer, Table G2439.5.5.1 shall be utilized.

G2439.7.4.3 (614.8.4.3) Dryer exhaust duct power ventilator length. The maximum length of the exhaust duct shall be determined by the dryer exhaust duct power ventilator manufacturer's installation instructions.

G2439.7.5 (614.8.5) Length identification. Where the exhaust duct equivalent length exceeds 35 feet (10 668 mm), the equivalent length of the exhaust duct shall be identified on a permanent label or tag. The label or tag shall be located within 6 feet (1829 mm) of the exhaust duct connection.

G2439.7.6 (614.8.6) Exhaust duct required. Where space for a *clothes dryer* is provided, an exhaust duct system shall be installed.

Where the *clothes dryer* is not installed at the time of occupancy, the exhaust duct shall be capped at location of the future dryer.

Exception: Where a *listed* condensing *clothes dryer* is installed prior to occupancy of the structure.

SECTION G2440 (615)
SAUNA HEATERS

G2440.1 (615.1) General. Sauna heaters shall be installed in accordance with the manufacturer's instructions.

G2440.2 (615.2) Location and protection. Sauna heaters shall be located so as to minimize the possibility of accidental contact by a person in the room.

G2440.2.1 (615.2.1) Guards. Sauna heaters shall be protected from accidental contact by an *approved* guard or barrier of material having a low coefficient of thermal conductivity. The guard shall not substantially affect the transfer of heat from the heater to the room.

G2440.3 (615.3) Access. Panels, grilles and access doors that are required to be removed for normal servicing operations, shall not be attached to the building.

G2440.4 (615.4) Combustion and dilution air intakes. Sauna heaters of other than the direct-vent type shall be installed with the *draft hood* and *combustion air* intake located outside the sauna room. Where the *combustion air* inlet and the *draft hood* are in a dressing room adjacent to the sauna room, there shall be provisions to prevent physically blocking the *combustion air* inlet and the *draft hood* inlet, and to prevent physical contact with the *draft hood* and vent assembly, or warning notices shall be posted to avoid such contact. Any warning notice shall be easily readable, shall contrast with its background and the wording shall be in letters not less than $^1/_4$ inch (6.4 mm) high.

G2440.5 (615.5) Combustion and ventilation air. *Combustion air* shall not be taken from inside the sauna room. *Combustion* and ventilation air for a sauna heater not of the direct-vent type shall be provided to the area in which the *combustion air* inlet and *draft hood* are located in accordance with Section G2407.

G2440.6 (615.6) Heat and time controls. Sauna heaters shall be equipped with a *thermostat* which will limit room temperature to 194°F (90°C). If the *thermostat* is not an integral part of the sauna heater, the heat-sensing element shall be located within 6 inches (152 mm) of the ceiling. If the heat-sensing element is a capillary tube and bulb, the assembly shall be attached to the wall or other support, and shall be protected against physical damage.

G2440.6.1 (615.6.1) Timers. A timer, if provided to *control main burner* operation, shall have a maximum operating time of 1 hour. The *control* for the timer shall be located outside the sauna room.

G2440.7 (615.7) Sauna room. A ventilation opening into the sauna room shall be provided. The opening shall be not less than 4 inches by 8 inches (102 mm by 203 mm) located near the top of the door into the sauna room.

SECTION G2441 (617) POOL AND SPA HEATERS

G2441.1 (617.1) General. Pool and spa heaters shall be tested in accordance with ANSI Z21.56/CSA 4.7 and shall be installed in accordance with the manufacturer's instructions.

SECTION G2442 (618) FORCED-AIR WARM-AIR FURNACES

G2442.1 (618.1) General. Forced-air warm-air *furnaces* shall be tested in accordance with ANSI Z21.47 or UL 795 and shall be installed in accordance with the manufacturer's instructions.

G2442.2 (618.2) Forced-air furnaces. The minimum unobstructed total area of the outside and return air ducts or openings to a forced-air warm-air *furnace* shall be not less than 2 square inches for each 1,000 *Btu*/h (4402 mm^2/W) output rating capacity of the *furnace* and not less than that specified in the *furnace* manufacturer's installation instructions. The minimum unobstructed total area of supply ducts from a forced-air warm-air *furnace* shall be not less than 2 square inches for each 1,000 *Btu*/h (4402 mm^2/W) output rating capacity of the *furnace* and not less than that specified in the *furnace* manufacturer's installation instructions.

Exception: The total area of the supply air ducts and outside and return air ducts shall not be required to be larger than the minimum size required by the *furnace* manufacturer's installation instructions.

G2442.3 (618.3) Dampers. Volume dampers shall not be placed in the air inlet to a *furnace* in a manner that will reduce the required air to the *furnace*.

G2442.4 (618.4) Prohibited sources. Outdoor or return air for forced-air heating and cooling systems shall not be taken from the following locations:

1. Closer than 10 feet (3048 mm) from an *appliance* vent outlet, a vent opening from a plumbing drainage system or the discharge outlet of an exhaust fan, unless the outlet is 3 feet (914 mm) above the outside air inlet.
2. Where there is the presence of objectionable odors, fumes or flammable vapors; or where located less than 10 feet (3048 mm) above the surface of any abutting public way or driveway; or where located at grade level by a sidewalk, street, alley or driveway.
3. A hazardous or insanitary location or a refrigeration machinery room as defined in the *International Mechanical Code*.
4. A room or space, the volume of which is less than 25 percent of the entire volume served by such system. Where connected by a permanent opening having an area sized in accordance with Section G2442.2, adjoining rooms or spaces shall be considered as a single room or space for the purpose of determining the volume of such rooms or spaces.

   Exception: The minimum volume requirement shall not apply where the amount of return air taken from a room or space is less than or equal to the amount of supply air delivered to such room or space.
5. A room or space containing an *appliance* where such a room or space serves as the sole source of return air.

   Exception: This shall not apply where:

   1. The *appliance* is a direct-vent *appliance* or an *appliance* not requiring a vent in accordance with Section G2425.8.
   2. The room or space complies with the following requirements:

      2.1. The return air shall be taken from a room or space having a volume exceeding 1 cubic foot for each 10 Btu/h (9.6L/W) of combined input rating of all fuel-burning appliances therein.

      2.2. The volume of supply air discharged back into the same space shall be approximately equal to the volume of return air taken from the space.

      2.3. Return-air inlets shall not be located within 10 feet (3048 mm) of a draft hood in the same room or space or the combustion chamber of any atmospheric burner *appliance* in the same room or space.
   3. Rooms or spaces containing solid fuel-burning appliances, provided that return-air inlets are located not less than 10 feet (3048 mm) from the firebox of such appliances.
6. A closet, bathroom, toilet room, kitchen, garage, boiler room, furnace room or unconditioned attic.

   Exceptions:

   1. Where return air intakes are located not less than 10 feet (3048 mm) from cooking appliances and serve only the kitchen area, taking

return air from a kitchen area shall not be prohibited.

2. Dedicated forced air systems serving only a garage shall not be prohibited from obtaining return air from the garage.

7. A crawl space by means of direct connection to the return side of a forced-air system. Transfer openings in the crawl space enclosure shall not be prohibited.

G2442.5 (618.5) Screen. Required outdoor air inlets shall be covered with a screen having $^1/_4$-inch (6.4 mm) openings.

G2442.6 (618.6) Return-air limitation. Return air from one *dwelling unit* shall not be discharged into another *dwelling unit.*

G2442.7 (618.7) Furnace plenums and air ducts. Where a *furnace* is installed so that supply ducts carry air circulated by the *furnace* to areas outside of the space containing the *furnace*, the return air shall be handled by a duct(s) sealed to the *furnace* casing and terminating outside of the space containing the *furnace*.

SECTION G2443 (619) CONVERSION BURNERS

G2443.1 (619.1) Conversion burners. The installation of *conversion burners* shall conform to ANSI Z21.8.

SECTION G2444 (620) UNIT HEATERS

G2444.1 (620.1) General. *Unit heaters* shall be tested in accordance with ANSI Z83.8 and shall be installed in accordance with the manufacturer's instructions.

G2444.2 (620.2) Support. Suspended-type *unit heaters* shall be supported by elements that are designed and constructed to accommodate the weight and dynamic loads. Hangers and brackets shall be of noncombustible material.

G2444.3 (620.3) Ductwork. Ducts shall not be connected to a unit heater unless the heater is *listed* for such installation.

G2444.4 (620.4) Clearance. Suspended-type *unit heaters* shall be installed with *clearances* to *combustible materials* of not less than 18 inches (457 mm) at the sides, 12 inches (305 mm) at the bottom and 6 inches (152 mm) above the top where the unit heater has an internal *draft hood* or 1 inch (25 mm) above the top of the sloping side of the vertical *draft hood.*

Floor-mounted-type *unit heaters* shall be installed with *clearances* to *combustible materials* at the back and one side only of not less than 6 inches (152 mm). Where the *flue gases* are vented horizontally, the 6-inch (152 mm) *clearance* shall be measured from the *draft hood* or *vent* instead of the rear wall of the unit heater. Floor-mounted-type *unit heaters* shall not be installed on combustible floors unless *listed* for such installation.

Clearances for servicing all *unit heaters* shall be in accordance with the manufacturer's installation instructions.

Exception: *Unit heaters listed* for reduced *clearance* shall be permitted to be installed with such *clearances* in accordance with their listing and the manufacturer's instructions.

SECTION G2445 (621) UNVENTED ROOM HEATERS

G2445.1 (621.1) General. *Unvented room heaters* shall be tested in accordance with ANSI Z21.11.2 and shall be installed in accordance with the conditions of the listing and the manufacturer's instructions.

G2445.2 (621.2) Prohibited use. One or more *unvented room heaters* shall not be used as the sole source of comfort heating in a *dwelling unit.*

G2445.3 (621.3) Input rating. *Unvented room heaters* shall not have an input rating in excess of 40,000 *Btu*/h (11.7 kW).

G2445.4 (621.4) Prohibited locations. The location of *unvented room heaters* shall comply with Section G2406.2.

G2445.5 (621.5) Room or space volume. The aggregate input rating of all *unvented appliances* installed in a room or space shall not exceed 20 *Btu*/h per *cubic foot* (207 W/m^3) of volume of such room or space. Where the room or space in which the *appliances* are installed is directly connected to another room or space by a doorway, archway or other opening of comparable size that cannot be closed, the volume of such adjacent room or space shall be permitted to be included in the calculations.

G2445.6 (621.6) Oxygen-depletion safety system. *Unvented room heaters* shall be equipped with an oxygen-depletion-sensitive safety shutoff system. The system shall shut off the gas supply to the main and *pilot burners* when the oxygen in the surrounding atmosphere is depleted to the percent concentration specified by the manufacturer, but not lower than 18 percent. The system shall not incorporate field adjustment means capable of changing the set point at which the system acts to shut off the gas supply to the room heater.

G2445.7 (621.7) Unvented decorative room heaters. An unvented decorative room heater shall not be installed in a *factory-built fireplace* unless the *fireplace* system has been specifically tested, *listed* and *labeled* for such use in accordance with UL 127.

G2445.7.1 (621.7.1) Ventless firebox enclosures. Ventless firebox enclosures used with unvented decorative room heaters shall be *listed* as complying with ANSI Z21.91.

SECTION G2446 (622) VENTED ROOM HEATERS

G2446.1 (622.1) General. *Vented room heaters* shall be tested in accordance with ANSI Z21.86/CSA 2.32, shall be designed and equipped as specified in Section G2432.2 and shall be installed in accordance with the manufacturer's instructions.

SECTION G2447 (623) COOKING APPLIANCES

G2447.1 (623.1) Cooking appliances. Cooking *appliances* that are designed for permanent installation, including ranges, ovens, stoves, broilers, grills, fryers, griddles, hot plates and barbecues, shall be tested in accordance with ANSI Z21.1 or

ANSI Z21.58 and shall be installed in accordance with the manufacturer's instructions.

G2447.2 (623.2) Prohibited location. Cooking appliances designed, tested, *listed* and *labeled* for use in commercial occupancies shall not be installed within dwelling units or within any area where domestic cooking operations occur.

Exception: Appliances that are also listed as domestic cooking appliances.

G2447.3 (623.3) Domestic appliances. Cooking *appliances* installed within *dwelling units* and within areas where domestic cooking operations occur shall be *listed* and *labeled* as household-type *appliances* for domestic use.

G2447.4 (623.4) Range installation. Ranges installed on combustible floors shall be set on their own bases or legs and shall be installed with *clearances* of not less than that shown on the label.

G2447.5 (623.7) Vertical clearance above cooking top. Household cooking *appliances* shall have a vertical *clearance* above the cooking top of not less than 30 inches (760 mm) to *combustible material* and metal cabinets. A minimum *clearance* of 24 inches (610 mm) is permitted where one of the following is installed:

1. The underside of the *combustible material* or metal cabinet above the cooking top is protected with not less than $^1/_4$-inch (6 mm) insulating millboard covered with sheet metal not less than 0.0122 inch (0.3 mm) thick.
2. A metal ventilating hood constructed of sheet metal not less than 0.0122 inch (0.3 mm) thick is installed above the cooking top with a *clearance* of not less than $^1/_4$ inch (6 mm) between the hood and the underside of the *combustible material* or metal cabinet. The hood shall have a width not less than the width of the *appliance* and shall be centered over the *appliance*.
3. A *listed* cooking *appliance* or microwave oven is installed over a *listed* cooking *appliance* and in compliance with the terms of the manufacturer's installation instructions for the upper *appliance*.

SECTION G2448 (624) WATER HEATERS

G2448.1 (624.1) General. Water heaters shall be tested in accordance with ANSI Z21.10.1 and ANSI Z21.10.3 and shall be installed in accordance with the manufacturer's instructions.

G2448.1.1 (624.1.1) Installation requirements. The requirements for *water heaters* relative to sizing, *relief valves*, drain pans and scald protection shall be in accordance with this code.

G2448.2 (624.2) Water heaters utilized for space heating. *Water heaters* utilized both to supply potable hot water and provide hot water for space-heating applications shall be *listed* and *labeled* for such applications by the manufacturer and shall be installed in accordance with the manufacturer's instructions and this code.

SECTION G2449 (627) AIR-CONDITIONING APPLIANCES

G2449.1 (627.1) General. Gas-fired air-conditioning *appliances* shall be tested in accordance with ANSI Z21.40.1 or ANSI Z21.40.2 and shall be installed in accordance with the manufacturer's instructions.

G2449.2 (627.2) Independent piping. *Gas piping* serving heating *appliances* shall be permitted to also serve cooling *appliances* where such heating and cooling *appliances* cannot be operated simultaneously (see Section G2413).

G2449.3 (627.3) Connection of gas engine-powered air conditioners. To protect against the effects of normal vibration in service, gas engines shall not be rigidly connected to the gas supply *piping*.

G2449.4 (627.6) Installation. Air conditioning *appliances* shall be installed in accordance with the manufacturer's instructions. Unless the *appliance* is *listed* for installation on a combustible surface such as a floor or roof, or unless the surface is protected in an *approved* manner, the *appliance* shall be installed on a surface of noncombustible construction with *noncombustible material* and surface finish and with no *combustible material* against the underside thereof.

SECTION G2450 (628) ILLUMINATING APPLIANCES

G2450.1 (628.1) General. Illuminating *appliances* shall be tested in accordance with ANSI Z21.42 and shall be installed in accordance with the manufacturer's instructions.

G2450.2 (628.2) Mounting on buildings. Illuminating *appliances* designed for wall or ceiling mounting shall be securely attached to substantial structures in such a manner that they are not dependent on the *gas piping* for support.

G2450.3 (628.3) Mounting on posts. Illuminating *appliances* designed for post mounting shall be securely and rigidly attached to a post. Posts shall be rigidly mounted. The strength and rigidity of posts greater than 3 feet (914 mm) in height shall be at least equivalent to that of a $2^1/_2$-inch-diameter (64 mm) post constructed of 0.064-inch-thick (1.6 mm) steel or a 1-inch (25 mm) Schedule 40 steel *pipe*. Posts 3 feet (914 mm) or less in height shall not be smaller than a $^3/_4$-inch (19.1 mm) Schedule 40 steel *pipe*. Drain openings shall be provided near the base of posts where there is a possibility of water collecting inside them.

G2450.4 (628.4) Appliance pressure regulators. Where an *appliance pressure regulator* is not supplied with an illuminating *appliance* and the service line is not equipped with a *service pressure regulator*, an *appliance pressure regulator* shall be installed in the line to the illuminating *appliance*. For multiple installations, one *regulator* of adequate capacity shall be permitted to serve more than one illuminating *appliance*.

SECTION G2451 (630)
INFRARED RADIANT HEATERS

G2451.1 (630.1) General. Infrared radiant heaters shall be tested in accordance with ANSI Z83.19 or Z83.20 and shall be installed in accordance with the manufacturer's instructions.

G2451.2 (630.2) Support. *Infrared radiant heaters* shall be fixed in a position independent of gas and electric supply lines. Hangers and brackets shall be of *noncombustible material.*

SECTION G2452 (631)
BOILERS

G2452.1 (631.1) Standards. Boilers shall be *listed* in accordance with the requirements of ANSI Z21.13 or UL 795. If applicable, the boiler shall be designed and constructed in accordance with the requirements of ASME CSD-1 and as applicable, the ASME *Boiler and Pressure Vessel Code*, Sections I, II, IV, V and IX and NFPA 85.

G2452.2 (631.2) Installation. In addition to the requirements of this code, the installation of boilers shall be in accordance with the manufacturer's instructions. Operating instructions of a permanent type shall be attached to the boiler. Boilers shall have all *controls* set, adjusted and tested by the installer. A complete *control* diagram together with complete boiler operating instructions shall be furnished by the installer. The manufacturer's rating data and the nameplate shall be attached to the boiler.

G2452.3 (631.3) Clearance to combustible material. *Clearances* to *combustible materials* shall be in accordance with Section G2409.4.

SECTION G2453 (634)
CHIMNEY DAMPER OPENING AREA

G2453.1 (634.1) Free opening area of chimney dampers. Where an unlisted decorative *appliance* for installation in a vented *fireplace* is installed, the *fireplace damper* shall have a permanent free opening equal to or greater than specified in Table G2453.1.

SECTION G2454 (636)
OUTDOOR DECORATIVE APPLIANCES

G2454.1 (636.1) General. Permanently fixed-in-place outdoor decorative appliances shall be tested in accordance with ANSI Z21.97 and shall be installed in accordance with the manufacturer's instructions.

TABLE G2453.1 (634.1)
FREE OPENING AREA OF CHIMNEY DAMPER FOR VENTING FLUE GASES FROM UNLISTED DECORATIVE APPLIANCES FOR INSTALLATION IN VENTED FIREPLACES

CHIMNEY HEIGHT (feet)	MINIMUM PERMANENT FREE OPENING (square inches)[a]						
	8	13	20	29	39	51	64
	Appliance input rating (Btu per hour)						
6	7,800	14,000	23,200	34,000	46,400	62,400	80,000
8	8,400	15,200	25,200	37,000	50,400	68,000	86,000
10	9,000	16,800	27,600	40,400	55,800	74,400	96,400
15	9,800	18,200	30,200	44,600	62,400	84,000	108,800
20	10,600	20,200	32,600	50,400	68,400	94,000	122,200
30	11,200	21,600	36,600	55,200	76,800	105,800	138,600

For SI: 1 inch = 25.4 mm, 1 foot = 304.8 mm, 1 square inch = 645.16 mm^2, 1,000 Btu per hour = 0.293 kW.

a. The first six minimum permanent free openings (8 to 51 square inches) correspond approximately to the cross-sectional areas of chimneys having diameters of 3 through 8 inches, respectively. The 64-square-inch opening corresponds to the cross-sectional area of standard 8-inch by 8-inch chimney tile.

Part VII—Plumbing

CHAPTER 25

PLUMBING ADMINISTRATION

User note: Code change proposals to this chapter will be considered by the IRC – Plumbing and Mechanical Code Development Committee during the 2015 (Group A) Code Development Cycle. See explanation on page xvii.

SECTION P2501
GENERAL

P2501.1 Scope. The provisions of this chapter shall establish the general administrative requirements applicable to plumbing systems and inspection requirements of this code.

P2501.2 Application. In addition to the general administration requirements of Chapter 1, the administrative provisions of this chapter shall also apply to the plumbing requirements of Chapters 25 through 32.

SECTION P2502
EXISTING PLUMBING SYSTEMS

P2502.1 Existing building sewers and building drains. Where the entire sanitary drainage system of an existing building is replaced, existing *building drains* under concrete slabs and existing *building sewers* that will serve the new system shall be internally examined to verify that the piping is sloping in the correct direction, is not broken, is not obstructed and is sized for the drainage load of the new plumbing drainage system to be installed.

P2502.2 Additions, alterations or repairs. Additions, *alterations*, renovations or repairs to any plumbing system shall conform to that required for a new plumbing system without requiring the existing plumbing system to comply with the requirements of this code. Additions, *alterations* or repairs shall not cause an existing system to become unsafe, insanitary or overloaded.

Minor additions, *alterations*, renovations and repairs to existing plumbing systems shall be permitted in the same manner and arrangement as in the existing system, provided that such repairs or replacement are not hazardous and are *approved*.

SECTION P2503
INSPECTION AND TESTS

P2503.1 Inspection required. New plumbing work and parts of existing systems affected by new work or *alterations* shall be inspected by the *building official* to ensure compliance with the requirements of this code.

P2503.2 Concealment. A plumbing or drainage system, or part thereof, shall not be covered, concealed or put into use until it has been tested, inspected and *approved* by the *building official*.

P2503.3 Responsibility of permittee. Test equipment, materials and labor shall be furnished by the permittee.

P2503.4 Building sewer testing. The *building sewer* shall be tested by insertion of a test plug at the point of connection with the public sewer, filling the *building sewer* with water and pressurizing the sewer to not less than 10-foot (3048 mm) head of water. The test pressure shall not decrease during a period of not less than 15 minutes. The *building sewer* shall be watertight at all points.

A forced sewer test shall consist of pressurizing the piping to a pressure of not less than 5 psi (34.5 kPa) greater than the pump rating and maintaining such pressure for not less than 15 minutes. The forced sewer shall be water tight at all points.

P2503.5 Drain, waste and vent systems testing. Rough-in and finished plumbing installations of drain, waste and vent systems shall be tested in accordance with Sections P2503.5.1 and P2503.5.2.

P2503.5.1 Rough plumbing. DWV systems shall be tested on completion of the rough piping installation by water or, for piping systems other than plastic, by air, without evidence of leakage. Either test shall be applied to the drainage system in its entirety or in sections after rough-in piping has been installed, as follows:

1. Water test. Each section shall be filled with water to a point not less than 5 feet (1524 mm) above the highest fitting connection in that section, or to the highest point in the completed system. Water shall be held in the section under test for a period of 15 minutes. The system shall prove leak free by visual inspection.
2. Air test. The portion under test shall be maintained at a gauge pressure of 5 pounds per square inch (psi) (34 kPa) or 10 inches of mercury column (34 kPa). This pressure shall be held without introduction of additional air for a period of 15 minutes.

P2503.5.2 Finished plumbing. After the plumbing fixtures have been set and their traps filled with water, their connections shall be tested and proved gas tight or water tight as follows:

1. Water tightness. Each fixture shall be filled and then drained. Traps and fixture connections shall be proven water tight by visual inspection.
2. Gas tightness. Where required by the local administrative authority, a final test for gas tightness of the

DWV system shall be made by the smoke or peppermint test as follows:

2.1. Smoke test. Introduce a pungent, thick smoke into the system. When the smoke appears at vent terminals, such terminals shall be sealed and a pressure equivalent to a 1-inch water column (249 Pa) shall be applied and maintained for a test period of not less than 15 minutes.

2.2. Peppermint test. Introduce 2 ounces (59 mL) of oil of peppermint into the system. Add 10 quarts (9464 mL) of hot water and seal the vent terminals. The odor of peppermint shall not be detected at any trap or other point in the system.

P2503.6 Shower liner test. Where shower floors and receptors are made water tight by the application of materials required by Section P2709.2, the completed liner installation shall be tested. The pipe from the shower drain shall be plugged water tight for the test. The floor and receptor area shall be filled with potable water to a depth of not less than 2 inches (51 mm) measured at the threshold. Where a threshold of not less than 2 inches (51 mm) in height does not exist, a temporary threshold shall be constructed to retain the test water in the lined floor or receptor area to a level not less than 2 inches (51 mm) in depth measured at the threshold. The water shall be retained for a test period of not less than 15 minutes and there shall not be evidence of leakage.

P2503.7 Water-supply system testing. Upon completion of the water-supply system or a section of it, the system or portion completed shall be tested and proved tight under a water pressure of not less than the working pressure of the system or, for piping systems other than plastic, by an air test of not less than 50 psi (345 kPa). This pressure shall be held for not less than 15 minutes. The water used for tests shall be obtained from a potable water source.

P2503.8 Inspection and testing of backflow prevention devices. Inspection and testing of backflow prevention devices shall comply with Sections P2503.8.1 and P2503.8.2.

P2503.8.1 Inspections. Inspections shall be made of backflow prevention assemblies to determine whether they are operable.

P2503.8.2 Testing. Reduced pressure principle, double check, double check detector and pressure vacuum breaker backflow preventer assemblies shall be tested at the time of installation, immediately after repairs or relocation and every year thereafter.

P2503.9 Test gauges. Gauges used for testing shall be as follows:

1. Tests requiring a pressure of 10 psi or less shall utilize a testing gauge having increments of 0.10 psi (0.69 kPa) or less.
2. Tests requiring a pressure higher than 10 psi (0.69 kPa) but less than or equal to 100 psi (690 kPa) shall use a testing gauge having increments of 1 psi (6.9 kPa) or less.
3. Tests requiring a pressure higher than 100 psi (690 kPa) shall use a testing gauge having increments of 2 psi (14 kPa) or less.

CHAPTER 26

GENERAL PLUMBING REQUIREMENTS

User note: Code change proposals to this chapter will be considered by the IRC – Plumbing and Mechanical Code Development Committee during the 2015 (Group A) Code Development Cycle. See explanation on page xvii.

SECTION P2601
GENERAL

P2601.1 Scope. The provisions of this chapter shall govern the installation of plumbing not specifically covered in other chapters applicable to plumbing systems. The installation of plumbing, *appliances, equipment* and systems not addressed by this code shall comply with the applicable provisions of the *International Plumbing Code.*

P2601.2 Connections to drainage system. Plumbing fixtures, drains, appurtenances and *appliances* used to receive or discharge liquid wastes or sewage shall be directly connected to the sanitary drainage system of the building or premises, in accordance with the requirements of this code. This section shall not be construed to prevent indirect waste connections where required by the code.

Exception: Bathtubs, showers, lavatories, clothes washers and laundry trays shall not be required to discharge to the sanitary drainage system where such fixtures discharge to systems complying with Sections P2910 and P2911.

P2601.3 Flood hazard areas. In flood hazard areas as established by Table R301.2(1), plumbing fixtures, drains, and *appliances* shall be located or installed in accordance with Section R322.1.6.

SECTION P2602
INDIVIDUAL WATER SUPPLY AND SEWAGE DISPOSAL

P2602.1 General. The water-distribution and drainage system of any building or premises where plumbing fixtures are installed shall be connected to a public water supply or sewer system, respectively, if available. Where either a public water-supply or sewer system, or both, are not available, or connection to them is not feasible, an individual water supply or individual (private) sewage-disposal system, or both, shall be provided.

P2602.2 Flood-resistant installation. In flood hazard areas as established by Table R301.2(1):

1. Water supply systems shall be designed and constructed to prevent infiltration of floodwaters.
2. Pipes for sewage disposal systems shall be designed and constructed to prevent infiltration of floodwaters into the systems and discharges from the systems into floodwaters.

SECTION P2603
STRUCTURAL AND PIPING PROTECTION

P2603.1 General. In the process of installing or repairing any part of a plumbing and drainage installation, the finished floors, walls, ceilings, tile work or any other part of the building or premises that must be changed or replaced shall be left in a safe structural condition in accordance with the requirements of the building portion of this code.

P2603.2 Drilling and notching. Wood-framed structural members shall not be drilled, notched or altered in any manner except as provided in Sections R502.8, R602.6, R802.7 and R802.7.1. Holes in load-bearing members of cold-formed steel light-frame construction shall be made only in accordance with Sections R505.2.6, R603.2.6 and R804.2.6. In accordance with the provisions in Sections R505.3.5, R603.3.3 and R804.3.4, cutting and notching of flanges and lips of load-bearing members of cold-formed steel light-frame construction shall be prohibited. Structural insulated panels (SIPs) shall be drilled and notched or altered in accordance with the provisions of Section R613.7.

P2603.2.1 Protection against physical damage. In concealed locations, where piping, other than cast-iron or galvanized steel, is installed through holes or notches in studs, joists, rafters or similar members less than $1^1/_4$ inches (31.8 mm) from the nearest edge of the member, the pipe shall be protected by steel shield plates. Such shield plates shall have a thickness of not less than 0.0575 inch (1.463 mm) (No. 16 Gage). Such plates shall cover the area of the pipe where the member is notched or bored, and shall extend not less than 2 inches (51 mm) above sole plates and below top plates.

P2603.3 Protection against corrosion. Metallic piping, except for cast iron, ductile iron and galvanized steel, shall not be placed in direct contact with steel framing members, concrete or masonry. Metallic piping shall not be placed in direct contact with corrosive soil. Where sheathing is used to prevent direct contact, the sheathing material thickness shall be not less than 0.008 inch (8 mil) (0.203 mm) and shall be made of plastic. Where sheathing protects piping that penetrates concrete or masonry walls or floors, the sheathing shall be installed in a manner that allows movement of the piping within the sheathing.

P2603.4 Pipes through foundation walls. A pipe that passes through a foundation wall shall be provided with a relieving arch, or a pipe sleeve shall be built into the foundation wall. The sleeve shall be two pipe sizes greater than the pipe passing through the wall.

P2603.5 Freezing. In localities having a winter design temperature of 32°F (0°C) or lower as shown in Table R301.2(1) of this code, a water, soil or waste pipe shall not be installed outside of a building, in exterior walls, in *attics* or crawl spaces, or in any other place subjected to freezing temperature unless adequate provision is made to protect it from freezing by insulation or heat or both. Water service pipe shall be installed not less than 12 inches (305 mm) deep and not less than 6 inches (152 mm) below the frost line.

P2603.5.1 Sewer depth. *Building sewers* that connect to private sewage disposal systems shall be a not less than [NUMBER] inches (mm) below finished grade at the point of septic tank connection. *Building sewers* shall be not less than [NUMBER] inches (mm) below grade.

SECTION P2604
TRENCHING AND BACKFILLING

P2604.1 Trenching and bedding. Where trenches are excavated such that the bottom of the trench forms the bed for the pipe, solid and continuous load-bearing support shall be provided between joints. Where over-excavated, the trench shall be backfilled to the proper grade with compacted earth, sand, fine gravel or similar granular material. Piping shall not be supported on rocks or blocks at any point. Rocky or unstable soil shall be over-excavated by two or more pipe diameters and brought to the proper grade with suitable compacted granular material.

P2604.2 Water service and building sewer in same trench. Where the water service piping and *building sewer* piping is installed in same trench, the installation shall be in accordance with Section P2906.4.1.

P2604.3 Backfilling. Backfill shall be free from discarded construction material and debris. Backfill shall be free from rocks, broken concrete and frozen chunks until the pipe is covered by not less than 12 inches (305 mm) of tamped earth. Backfill shall be placed evenly on both sides of the pipe and tamped to retain proper alignment. Loose earth shall be carefully placed in the trench in 6-inch (152 mm) layers and tamped in place.

P2604.4 Protection of footings. Trenching installed parallel to footings and walls shall not extend into the bearing plane of a footing or wall. The upper boundary of the bearing plane is a line that extends downward, at an angle of 45 degrees from horizontal, from the outside bottom edge of the footing or wall.

SECTION P2605
SUPPORT

P2605.1 General. Piping shall be supported in accordance with the following:

1. Piping shall be supported to ensure alignment and prevent sagging, and allow movement associated with the expansion and contraction of the piping system.
2. Piping in the ground shall be laid on a firm bed for its entire length, except where support is otherwise provided.
3. Hangers and anchors shall be of sufficient strength to maintain their proportional share of the weight of pipe and contents and of sufficient width to prevent distortion to the pipe. Hangers and strapping shall be of *approved* material that will not promote galvanic action. Rigid support sway bracing shall be provided at changes in direction greater than 45 degrees (0.79 rad) for pipe sizes 4 inches (102 mm) and larger.
4. Piping shall be supported at distances not to exceed those indicated in Table P2605.1.

TABLE P2605.1
PIPING SUPPORT

PIPING MATERIAL	MAXIMUM HORIZONTAL SPACING (feet)	MAXIMUM VERTICAL SPACING (feet)
ABS pipe	4	10[b]
Aluminum tubing	10	15
Cast-iron pipe	5[a]	15
Copper or copper alloy pipe	12	10
Copper or copper alloy tubing ($1^1/_4$ inches in diameter and smaller)	6	10
Copper or copper alloy tubing ($1^1/_2$ inches in diameter and larger)	10	10
Cross-linked polyethylene (PEX) pipe, 1 inch and smaller	2.67 (32 inches)	10[b]
Cross-linked polyethylene (PEX) pipe, $1^1/_4$ inch and larger	4	10[b]
Cross-linked polyethylene/aluminum/cross-linked polyethylene (PEX-AL-PEX) pipe	2.67 (32 inches)	4[b]
CPVC pipe or tubing (1 inch in diameter and smaller)	3	10[b]
CPVC pipe or tubing ($1^1/_4$ inches in diameter and larger)	4	10[b]
Lead pipe	Continuous	4
PB pipe or tubing	2.67 (32 inches)	4
Polyethylene of raised temperature (PE-RT) pipe, 1 inch and smaller	2.67 (32 inches)	10[b]
Polyethylene of raised temperature (PE-RT) pipe, $1^1/_4$ inch and larger	4	10[b]
Polypropylene (PP) pipe or tubing (1 inch and smaller)	2.67 (32 inches)	10[b]
Polypropylene (PP) pipe or tubing ($1^1/_4$ inches and larger)	4	10[b]
PVC pipe	4	10[b]
Stainless steel drainage systems	10	10[b]
Steel pipe	12	15

For SI: 1 inch = 25.4 mm, 1 foot = 304.8 mm.

a. The maximum horizontal spacing of cast-iron pipe hangers shall be increased to 10 feet where 10-foot lengths of pipe are installed.

b. For sizes 2 inches and smaller, a guide shall be installed midway between required vertical supports. Such guides shall prevent pipe movement in a direction perpendicular to the axis of the pipe.

SECTION P2606
PENETRATIONS

P2606.1 Sealing of annular spaces. The annular space between the outside of a pipe and the inside of a pipe sleeve or between the outside of a pipe and an opening in a building envelope wall, floor, or ceiling assembly penetrated by a pipe shall be sealed with caulking material or foam sealant or closed with a gasketing system. The caulking material, foam sealant or gasketing system shall be designed for the conditions at the penetration location and shall be compatible with the pipe, sleeve and building materials in contact with the sealing materials. Annular spaces created by pipes penetrating fire-resistance-rated assemblies or membranes of such assemblies shall be sealed or closed in accordance with the building portion of this code.

SECTION P2607
WATERPROOFING OF OPENINGS

P2607.1 Pipes penetrating roofs. Where a pipe penetrates a roof, a flashing of lead, copper, galvanized steel or an *approved* elastomeric material shall be installed in manner that prevents water entry into the building. Counterflashing into the opening of pipe serving as a vent terminal shall not reduce the required internal cross-sectional area of the vent pipe to less than the internal cross-sectional area of one pipe size smaller.

P2607.2 Pipes penetrating exterior walls. Where a pipe penetrates an exterior wall, a waterproof seal shall be made on the exterior of the wall by one of the following methods:

1. A waterproof sealant applied at the joint between the wall and the pipe.
2. A flashing of an *approved* elastomeric material.

SECTION P2608
WORKMANSHIP

P2608.1 General. Valves, pipes and fittings shall be installed in correct relationship to the direction of the flow. Burred ends shall be reamed to the full bore of the pipe.

SECTION P2609
MATERIALS EVALUATION AND LISTING

P2609.1 Identification. Each length of pipe and each pipe fitting, trap, fixture, material and device utilized in a plumbing system shall bear the identification of the manufacturer and any markings required by the applicable referenced standards. Nipples created from the cutting and threading of *approved* pipe shall not be required to be identified.

Exception: Where the manufacturer identification cannot be marked on pipe fittings and pipe nipples because of the small size of such fittings, the identification shall be printed on the item packaging or on documentation provided with the item.

P2609.2 Installation of materials. Materials used shall be installed in strict accordance with the standards under which the materials are accepted and *approved*. In the absence of such installation procedures, the manufacturer's instructions shall be followed. Where the requirements of referenced standards or manufacturer's instructions do not conform to the minimum provisions of this code, the provisions of this code shall apply.

P2609.3 Plastic pipe, fittings and components. Plastic pipe, fittings and components shall be third-party certified as conforming to NSF 14.

P2609.4 Third-party certification. Plumbing products and materials required by the code to be in compliance with a referenced standard shall be *listed* by a third-party certification agency as complying with the referenced standards. Products and materials shall be identified in accordance with Section P2609.1.

P2609.5 Water supply systems. Water service pipes, water distribution pipes and the necessary connecting pipes, fittings, control valves, faucets and appurtenances used to dispense water intended for human ingestion shall be evaluated and listed as conforming to the requirements of NSF 61.

CHAPTER 27

PLUMBING FIXTURES

User note: Code change proposals to this chapter will be considered by the IRC – Plumbing and Mechanical Code Development Committee during the 2015 (Group A) Code Development Cycle. See explanation on page xvii.

SECTION P2701
FIXTURES, FAUCETS AND FIXTURE FITTINGS

P2701.1 Quality of fixtures. Plumbing fixtures, faucets and fixture fittings shall have smooth impervious surfaces, shall be free from defects, shall not have concealed fouling surfaces, and shall conform to the standards indicated in Table P2701.1 and elsewhere in this code.

SECTION P2702
FIXTURE ACCESSORIES

P2702.1 Plumbing fixtures. Plumbing fixtures, other than water closets, shall be provided with *approved* strainers.

Exception: Hub drains receiving only clear water waste and standpipes shall not require strainers.

P2702.2 Waste fittings. Waste fittings shall conform to ASME A112.18.2/CSA B125.2, ASTM F 409 or shall be made from pipe and pipe fittings complying with any of the standards indicated in Tables P3002.1(1) and P3002.3.

P2702.3 Plastic tubular fittings. Plastic tubular fittings shall conform to ASTM F 409 as indicated in Table P2701.1.

P2702.4 Carriers for wall-hung water closets. Carriers for wall-hung water closets shall conform to ASME A112.6.1 or ASME A112.6.2.

SECTION P2703
TAIL PIECES

P2703.1 Minimum size. Fixture tail pieces shall be not less than $1^1/_2$ inches (38 mm) in diameter for sinks, dishwashers, laundry tubs, bathtubs and similar fixtures, and not less than $1^1/_4$ inches (32 mm) in diameter for bidets, lavatories and similar fixtures.

SECTION P2704
ACCESS TO CONNECTIONS

P2704.1 General. Slip joints shall be made with an *approved* elastomeric gasket and shall be installed only on the trap outlet, trap inlet and within the trap seal. Fixtures with concealed slip-joint connections shall be provided with an access panel or utility space not less than 12 inches (305 mm) in its smallest dimension or other *approved* arrangement so as to provide access to the slip connections for inspection and repair.

SECTION P2705
INSTALLATION

P2705.1 General. The installation of fixtures shall conform to the following:

1. Floor-outlet or floor-mounted fixtures shall be secured to the drainage connection and to the floor, where so designed, by screws, bolts, washers, nuts and similar fasteners of copper, copper alloy or other corrosion-resistant material.
2. Wall-hung fixtures shall be rigidly supported so that strain is not transmitted to the plumbing system.
3. Where fixtures come in contact with walls and floors, the contact area shall be water tight.
4. Plumbing fixtures shall be usable.
5. Water closets, lavatories and bidets. A water closet, lavatory or bidet shall not be set closer than 15 inches (381 mm) from its center to any side wall, partition or vanity or closer than 30 inches (762 mm) center-to-center between adjacent fixtures. There shall be a clearance of not less than 21 inches (533 mm) in front of a water closet, lavatory or bidet to any wall, fixture or door.
6. The location of piping, fixtures or equipment shall not interfere with the operation of windows or doors.
7. In flood hazard areas as established by Table R301.2(1), plumbing fixtures shall be located or installed in accordance with Section R322.1.7.
8. Integral fixture-fitting mounting surfaces on manufactured plumbing fixtures or plumbing fixtures constructed on site, shall meet the design requirements of ASME A112.19.2/CSA B45.1 or ASME A112.19.3/CSA B45.4.

SECTION P2706
WASTE RECEPTORS

P2706.1 General. For other than hub drains that receive only clear-water waste and standpipes, a removable strainer or basket shall cover the waste outlet of waste receptors. Waste receptors shall not be installed in concealed spaces. Waste receptors shall not be installed in plenums, attics, crawl spaces or interstitial spaces above ceilings and below floors. Waste receptors shall be readily accessible.

P2706.1.1 Hub drains. Hub drains shall be in the form of a hub or a pipe that extends not less than 1 inch (25 mm) above a water-impervious floor.

P2706.1.2 Standpipes. Standpipes shall extend not less than 18 inches (457 mm) and not greater than 42 inches (1067 mm) above the trap weir.

P2706.1.2.1 Laundry tray connection to standpipe. Where a laundry tray waste line connects into a standpipe for an automatic clothes washer drain, the standpipe shall extend not less than 30 inches (762 mm) above the standpipe trap weir and shall extend above the flood level rim of the laundry tray. The outlet of the laundry tray shall not be greater than 30 inches (762 mm) horizontally from the standpipe trap.

TABLE P2701.1
PLUMBING FIXTURES, FAUCETS AND FIXTURE FITTINGS

MATERIAL	STANDARD
Air gap fittings for use with plumbing fixtures, appliances and appurtenances	ASME A 112.1.3
Bathtub/whirlpool pressure-sealed doors	ASME A 112.19.15
Diverters for faucets with hose spray, anti-syphon type, residential application	ASTM A 112.18.1/CSA B125.1
Enameled cast-iron plumbing fixtures	ASME A 112.19.1M/CSA B45.2
Floor drains	ASME A 112.6.3
Floor-affixed supports for off-the-floor plumbing fixtures for public use	ASME A 112.6.1M
Framing-affixed supports for off-the-floor water closets with concealed tanks	ASME A 112.6.2
Hose connection vacuum breaker	ASSE 1052
Hot water dispensers, household storage type, electrical	ASSE 1023
Household disposers	ASSE 1008
Hydraulic performance for water closets and urinals	ASME A 112.19.2/CSA B45.1
Individual automatic compensating valves for individual fixture fittings	ASME A 112.18.1/CSA B125.1
Individual shower control valves anti-scald	ASSE 1016/ASME A 112.1016/CSA B125.16
Macerating toilet systems and related components	ASME A 112.3.4/CSA B45.9
Nonvitreous ceramic plumbing fixtures	ASME A 112.19.2/CSA B45.1
Plastic bathtub units	CSA B45.5/IAPMO Z124, ASME A112.19.2/CSA B45.1
Plastic lavatories	CSA B45.5/IAPMO Z124
Plastic shower receptors and shower stall	CSA B45.5/IAPMO Z124
Plastic sinks	CSA B45.5/IAPMO Z124
Plastic water closet bowls and tanks	CSA B45.5/IAPMO Z124
Plumbing fixture fittings	ASME A 112.18.1/CSA B125.1
Plumbing fixture waste fittings	ASME A 112.18.2/CSA B125.2, ASTM F 409
Porcelain-enameled formed steel plumbing fixtures	ASME A 112.19.1/CSA B45.2
Pressurized flushing devices for plumbing fixtures	ASSE 1037, CSA B125.3
Specification for copper sheet and strip for building construction	ASTM B 370
Stainless steel plumbing fixtures	ASME A 112.19.3/CSA B45.4
Suction fittings for use in whirlpool bathtub appliances	ASME A 112.19.7 /CSA B45.10
Temperature-actuated, flow reduction valves to individual fixture fittings	ASSE 1062
Thermoplastic accessible and replaceable plastic tube and tubular fittings	ASTM F 409
Trench drains	ASME A 112.6.3
Trim for water closet bowls, tanks and urinals	ASME A 112.19.5/CSA B45.15
Vacuum breaker wall hydrant-frost-resistant, automatic-draining type	ASSE 1019
Vitreous china plumbing fixtures	ASME A 112.19.2/CSA B45.1
Wall-mounted and pedestal-mounted, adjustable and pivoting lavatory and sink carrier systems	ASME A 112.19.12
Water closet flush tank fill valves	ASSE 1002, CSA B125.3
Whirlpool bathtub appliances	ASME A 112.19.7 /CSA B45.10

P2706.3 Prohibited waste receptors. Plumbing fixtures that are used for washing or bathing shall not be used to receive the discharge of indirect waste piping.

Exceptions:

1. A kitchen sink trap is acceptable for use as a receptor for a dishwasher.
2. A laundry tray is acceptable for use as a receptor for a clothes washing machine.

SECTION P2707
DIRECTIONAL FITTINGS

P2707.1 Directional fitting required. *Approved* directional-type branch fittings shall be installed in fixture tailpieces receiving the discharge from food-waste disposer units or dishwashers.

SECTION P2708
SHOWERS

P2708.1 General. Shower compartments shall have not less than 900 square inches (0.6 m^2) of interior cross-sectional area. Shower compartments shall be not less than 30 inches (762 mm) in minimum dimension measured from the finished interior dimension of the shower compartment, exclusive of fixture valves, shower heads, soap dishes, and safety grab bars or rails. The minimum required area and dimension shall be measured from the finished interior dimension at a height equal to the top of the threshold and at a point tangent to its centerline and shall be continued to a height of not less than 70 inches (1778 mm) above the shower drain outlet. Hinged shower doors shall open outward. The wall area above built-in tubs having installed shower heads and in shower compartments shall be constructed in accordance with Section R702.4. Such walls shall form a water-tight joint with each other and with either the tub, receptor or shower floor.

Exceptions:

1. Fold-down seats shall be permitted in the shower, provided the required 900-square-inch (0.6 m^2) dimension is maintained when the seat is in the folded-up position.
2. Shower compartments having not less than 25 inches (635 mm) in minimum dimension measured from the finished interior dimension of the compartment provided that the shower compartment has a cross-sectional area of not less than 1,300 square inches (0.838 m^2).

P2708.1.1 Access. The shower compartment access and egress opening shall have a clear and unobstructed finished width of not less than 22 inches (559 mm).

P2708.2 Shower drain. Shower drains shall have an outlet size of not less than $1^1/_2$ inches [38 mm] in diameter.

P2708.3 Water supply riser. Water supply risers from the shower valve to the shower head outlet, whether exposed or concealed, shall be attached to the structure using support devices designed for use with the specific piping material or fittings anchored with screws.

P2708.4 Shower control valves. Individual shower and tub/shower combination valves shall be equipped with control valves of the pressure-balance, thermostatic-mixing or combination pressure-balance/thermostatic-mixing valve types with a high limit stop in accordance with ASSE 1016/ASME A112.1016/CSA B125.16. The high limit stop shall be set to limit the water temperature to not greater than 120°F (49°C). In-line thermostatic valves shall not be used for compliance with this section.

P2708.5 Hand showers. Hand-held showers shall conform to ASME A112.18.1/CSA B125.1. Hand-held showers shall provide backflow protection in accordance with ASME A112.18.1/CSA B125.1 or shall be protected against backflow by a device complying with ASME A112.18.3.

SECTION P2709
SHOWER RECEPTORS

P2709.1 Construction. Where a shower receptor has a finished curb threshold, it shall be not less than 1 inch (25 mm) below the sides and back of the receptor. The curb shall be not less than 2 inches (51 mm) and not more than 9 inches (229 mm) deep when measured from the top of the curb to the top of the drain. The finished floor shall slope uniformly toward the drain not less than $^1/_4$ unit vertical in 12 units horizontal (2-percent slope) nor more than $^1/_2$ unit vertical per 12 units horizontal (4-percent slope) and floor drains shall be flanged to provide a water-tight joint in the floor.

P2709.2 Lining required. The adjoining walls and floor framing enclosing on-site built-up shower receptors shall be lined with one of the following materials:

1. Sheet lead.
2. Sheet copper.
3. Plastic liner material that complies with ASTM D 4068 or ASTM D 4551.
4. Hot mopping in accordance with Section P2709.2.3.
5. Sheet-applied load-bearing, bonded waterproof membranes that comply with ANSI A118.10.

The lining material shall extend not less than 2 inches (51 mm) beyond or around the rough jambs and not less than 2 inches (51 mm) above finished thresholds. Sheet-applied load bearing, bonded waterproof membranes shall be applied in accordance with the manufacturer's instructions.

P2709.2.1 PVC sheets. Plasticized polyvinyl chloride (PVC) sheet shall meet the requirements of ASTM D 4551. Sheets shall be joined by solvent welding in accordance with the manufacturer's instructions.

P2709.2.2 Chlorinated polyethylene (CPE) sheets. Non-plasticized chlorinated polyethylene sheet shall meet the requirements of ASTM D 4068. The liner shall be joined in accordance with the manufacturer's instructions.

P2709.2.3 Hot-mopping. Shower receptors lined by hot mopping shall be built-up with not less than three layers of standard grade Type 15 asphalt-impregnated roofing felt. The bottom layer shall be fitted to the formed subbase and each succeeding layer thoroughly hot-mopped to that

below. Corners shall be carefully fitted and shall be made strong and water tight by folding or lapping, and each corner shall be reinforced with suitable webbing hot-mopped in place. Folds, laps and reinforcing webbing shall extend not less than 4 inches (102 mm) in all directions from the corner and webbing shall be of *approved* type and mesh, producing a tensile strength of not less than 50 pounds per inch (893 kg/m) in either direction.

P2709.2.4 Liquid-type, trowel-applied, load-bearing, bonded waterproof materials. Liquid-type, trowel-applied, load-bearing, bonded waterproof materials shall meet the requirements of ANSI A118.10 and shall be applied in accordance with the manufacturer's instructions.

P2709.3 Installation. Lining materials shall be sloped one-fourth unit vertical in 12 units horizontal (2-percent slope) to weep holes in the subdrain by means of a smooth, solidly formed subbase, shall be properly recessed and fastened to *approved* backing so as not to occupy the space required for the wall covering, and shall not be nailed or perforated at any point less than 1 inch (25.4 mm) above the finished threshold.

P2709.3.1 Materials. Lead and copper linings shall be insulated from conducting substances other than the connecting drain by 15-pound (6.80 kg) asphalt felt or its equivalent. Sheet lead liners shall weigh not less than 4 pounds per square foot (19.5 kg/m^2). Sheet copper liners shall weigh not less than 12 ounces per square foot (3.7 kg/m^2). Joints in lead and copper pans or liners shall be burned or silver brazed, respectively. Joints in plastic liner materials shall be joined in accordance with the manufacturer's instructions.

P2709.4 Receptor drains. An *approved* flanged drain shall be installed with shower subpans or linings. The flange shall be placed flush with the subbase and be equipped with a clamping ring or other device to make a water-tight connection between the lining and the drain. The flange shall have weep holes into the drain.

SECTION P2710
SHOWER WALLS

P2710.1 Bathtub and shower spaces. Walls in shower compartments and walls above bathtubs that have a wall-mounted showerhead shall be finished in accordance with Section R307.2.

SECTION P2711
LAVATORIES

P2711.1 Approval. Lavatories shall conform to ASME A112.19.1/CSA B45.2, ASME A112.19.2/CSA B45.1, ASME A112.19.3/CSA B45.4 or CSA B45.5/IAPMO Z124.

P2711.2 Cultured marble lavatories. Cultured marble vanity tops with an integral lavatory shall conform to CSA B45.5/IAPMO Z124.

P2711.3 Lavatory waste outlets. Lavatories shall have waste outlets not less than $1^1/_4$ inch (32 mm) in diameter. A strainer, pop-up stopper, crossbar or other device shall be provided to restrict the clear opening of the waste outlet.

P2711.4 Movable lavatory systems. Movable lavatory systems shall comply with ASME A112.19.12.

SECTION P2712
WATER CLOSETS

P2712.1 Approval. Water closets shall conform to the water consumption requirements of Section P2903.2 and shall conform to ASME A112.19.2/CSA B45.1, ASME A112.19.3/CSA B45.4 or CSA B45.5/IAPMO Z124. Water closets shall conform to the hydraulic performance requirements of ASME A112.19.2/CSA B45.1. Water closet tanks shall conform to ASME A112.19.2/CSA B45.1, ASME A112.19.3/CSA B45.4 or CSA B45.5/IAPMO Z124. Water closets that have an invisible seal and unventilated space or walls that are not thoroughly washed at each discharge shall be prohibited. Water closets that allow backflow of the contents of the bowl into the flush tank shall be prohibited. Water closets equipped with a dual flushing device shall comply with ASME A112.19.14.

P2712.2 Flushing devices required. Water closets shall be provided with a flush tank, flushometer tank or flushometer valve designed and installed to supply water in sufficient quantity and flow to flush the contents of the fixture, to cleanse the fixture and refill the fixture trap in accordance with ASME A112.19.2/CSA B45.1.

P2712.3 Water supply for flushing devices. An adequate quantity of water shall be provided to flush and clean the fixture served. The water supply to flushing devices equipped for manual flushing shall be controlled by a float valve or other automatic device designed to refill the tank after each discharge and to completely shut off the water flow to the tank when the tank is filled to operational capacity. Provision shall be made to automatically supply water to the fixture so as to refill the trap after each flushing.

P2712.4 Flush valves in flush tanks. Flush valve seats in tanks for flushing water closets shall be not less than 1 inch (25 mm) above the flood-level rim of the bowl connected thereto, except an *approved* water closet and flush tank combination designed so that when the tank is flushed and the fixture is clogged or partially clogged, the flush valve will close tightly so that water will not spill continuously over the rim of the bowl or backflow from the bowl to the tank.

P2712.5 Overflows in flush tanks. Flush tanks shall be provided with overflows discharging to the water closet connected thereto and such overflow shall be of sufficient size to prevent flooding the tank at the maximum rate at which the tanks are supplied with water according to the manufacturer's design conditions.

P2712.6 Access. Parts in a flush tank shall be accessible for repair and replacement.

P2712.7 Water closet seats. Water closets shall be equipped with seats of smooth, nonabsorbent material and shall be properly sized for the water closet bowl type.

P2712.8 Flush tank lining. Sheet copper used for flush tank linings shall have a weight of not less than 10 ounces per square foot (3 kg/m^2).

P2712.9 Electro-hydraulic water closets. Electro-hydraulic water closets shall conform to ASME A112.19.2/CSA B45.1.

SECTION P2713
BATHTUBS

P2713.1 Bathtub waste outlets and overflows. Bathtubs shall be equipped with a waste outlet and an overflow outlet. The outlets shall be connected to waste tubing or piping not less than $1^1/_2$ inches (38 mm) in diameter. The waste outlet shall be equipped with a water-tight stopper.

P2713.2 Bathtub enclosures. Doors within a bathtub enclosure shall conform to ASME A112.19.15.

P2713.3 Bathtub and whirlpool bathtub valves. Hot water supplied to bathtubs and whirlpool bathtubs shall be limited to a temperature of not greater than 120°F (49°C) by a water-temperature limiting device that conforms to ASSE 1070 or CSA B125.3, except where such protection is otherwise provided by a combination tub/shower valve in accordance with Section P2708.4.

SECTION P2714
SINKS

P2714.1 Sink waste outlets. Sinks shall be provided with waste outlets not less than $1^1/_2$ inches (38 mm) in diameter. A strainer, crossbar or other device shall be provided to restrict the clear opening of the waste outlet.

P2714.2 Movable sink systems. Movable sink systems shall comply with ASME A112.19.12.

SECTION P2715
LAUNDRY TUBS

P2715.1 Laundry tub waste outlet. Each compartment of a laundry tub shall be provided with a waste outlet not less than $1^1/_2$ inches (38 mm) in diameter. A strainer or crossbar shall restrict the clear opening of the waste outlet.

SECTION P2716
FOOD-WASTE DISPOSER

P2716.1 Food-waste disposer waste outlets. Food-waste disposers shall be connected to a drain of not less than $1^1/_2$ inches (38 mm) in diameter.

P2716.2 Water supply required. A sink equipped with a food-waste disposer shall be provided with a faucet.

SECTION P2717
DISHWASHING MACHINES

P2717.1 Protection of water supply. The water supply to a dishwasher shall be protected against backflow by an *air gap* complying with ASME A112.1.3 or A112.1.2 that is installed integrally within the machine or a backflow preventer in accordance with Section P2902.

P2717.2 Sink and dishwasher. The combined discharge from a dishwasher and a one- or two-compartment sink, with or without a food-waste disposer, shall be served by a trap of not less than $1^1/_2$ inches (38 mm) in outside diameter. The dishwasher discharge pipe or tubing shall rise to the underside of the counter and be fastened or otherwise held in that position before connecting to the head of the food-waste disposer or to a wye fitting in the sink tailpiece.

SECTION P2718
CLOTHES WASHING MACHINE

P2718.1 Waste connection. The discharge from a clothes washing machine shall be through an *air break*.

SECTION P2719
FLOOR DRAINS

P2719.1 Floor drains. Floor drains shall have waste outlets not less than 2 inches (51 mm) in diameter and a removable strainer. Floor drains shall be constructed so that the drain can be cleaned. Access shall be provided to the drain inlet. Floor drains shall not be located under or have their access restricted by permanently installed appliances.

SECTION P2720
WHIRLPOOL BATHTUBS

P2720.1 Access to pump. Access shall be provided to circulation pumps in accordance with the fixture or pump manufacturer's installation instructions. Where the manufacturer's instructions do not specify the location and minimum size of field-fabricated access openings, an opening of not less than 12-inches by 12-inches (305 mm by 305 mm) shall be installed for access to the circulation pump. Where pumps are located more than 2 feet (610 mm) from the access opening, an opening of not less than 18 inches by 18 inches (457 mm by 457 mm) shall be installed. A door or panel shall be permitted to close the opening. The access opening shall be unobstructed and be of the size necessary to permit the removal and replacement of the circulation pump.

P2720.2 Piping drainage. The circulation pump shall be accessibly located above the crown weir of the trap. The pump drain line shall be properly graded to ensure minimum water retention in the volute after fixture use. The circulation piping shall be installed to be self-draining.

P2720.3 Leak testing. Leak testing and pump operation shall be performed in accordance with the manufacturer's instructions.

P2720.4 Manufacturer's instructions. The product shall be installed in accordance with the manufacturer's instructions.

SECTION P2721
BIDET INSTALLATIONS

P2721.1 Water supply. The bidet shall be equipped with either an air-gap-type or vacuum-breaker-type fixture supply fitting.

P2721.2 Bidet water temperature. The discharge water temperature from a bidet fitting shall be limited to not greater

than 110°F (43°C) by a water-temperature-limiting device conforming to ASSE 1070 or CSA B125.3.

SECTION P2722
FIXTURE FITTING

P2722.1 General. Fixture supply valves and faucets shall comply with ASME A112.18.1/CSA B125.1 as indicated in Table P2701.1. Faucets and fixture fittings that supply drinking water for human ingestion shall conform to the requirements of NSF 61, Section 9. Flexible water connectors shall conform to the requirements of Section P2905.7.

P2722.2 Hot water. Fixture fittings supplied with both hot and cold water shall be installed and adjusted so that the left-hand side of the water temperature control represents the flow of hot water when facing the outlet.

> **Exception:** Shower and tub/shower mixing valves conforming to ASSE 1016/ASME A112.1016/CSA B125.16, where the water temperature control corresponds to the markings on the device.

P2722.3 Hose-connected outlets. Faucets and fixture fittings with hose-connected outlets shall conform to ASME A112.18.3 or ASME A112.18.1/CSA B125.1.

P2722.4 Individual pressure-balancing in-line valves for individual fixture fittings. Individual pressure-balancing in-line valves for individual fixture fittings shall comply with ASSE 1066. Such valves shall be installed in an accessible location and shall not be used as a substitute for the balanced pressure, thermostatic or combination shower valves required in Section P2708.3.

P2722.5 Water closet personal hygiene devices. Personal hygiene devices integral to water closets or water closet seats shall conform to ASME A112.4.2.

SECTION P2723
MACERATING TOILET SYSTEMS

P2723.1 General. Macerating toilet systems shall be installed in accordance with manufacturer's instructions.

P2723.2 Drain. The size of the drain from the macerating toilet system shall be not less than $^3/_4$ inch (19 mm) in diameter.

SECTION P2724
SPECIALTY TEMPERATURE CONTROL DEVICES AND VALVES

P2724.1 Temperature-actuated mixing valves. Temperature-actuated mixing valves, which are installed to reduce water temperatures to defined limits, shall comply with ASSE 1017. Such valves shall be installed at the hot water source.

P2724.2 Temperature-actuated, flow-reduction devices for individual fixtures. Temperature-actuated, flow-reduction devices, where installed for individual fixture fittings, shall conform to ASSE 1062. Such valves shall not be used as a substitute for the balanced pressure, thermostatic or combination shower valves required for showers in Section P2708.3.

SECTION P2725
NONLIQUID SATURATED TREATMENT SYSTEMS

P2725.1 General. Materials, design, construction and performance of nonliquid saturated treatment systems shall comply with NSF 41.

CHAPTER 28

WATER HEATERS

User note: Code change proposals to this chapter will be considered by the IRC – Plumbing and Mechanical Code Development Committee during the 2015 (Group A) Code Development Cycle. See explanation on page xvii.

SECTION P2801
GENERAL

P2801.1 Required. Hot water shall be supplied to plumbing fixtures and plumbing appliances intended for bathing, washing or culinary purposes.

P2801.2 Drain valves. Drain valves for emptying shall be installed at the bottom of each tank-type water heater and *hot water* storage tank. The drain valve inlet shall be not less than $^3/_4$-inch (19.1 mm) nominal iron pipe size and the outlet shall be provided with a male hose thread.

P2801.3 Installation. Water heaters shall be installed in accordance with this chapter and Chapters 20 and 24.

P2801.4 Location. Water heaters and storage tanks shall be installed in accordance with Section M1305 and shall be located and connected to provide access for observation, maintenance, servicing and replacement.

P2801.5 Prohibited locations. Water heaters shall be located in accordance with Chapter 20.

P2801.6 Required pan. Where a storage tank-type water heater or a hot water storage tank is installed in a location where water leakage from the tank will cause damage, the tank shall be installed in a pan constructed of one of the following:

1. Galvanized steel or aluminum of not less than 0.0236 inch (0.6010 mm) in thickness.
2. Plastic not less than 0.036 inch (0.9 mm) in thickness.
3. Other approved materials.

A plastic pan shall not be installed beneath a gas-fired water heater.

P2801.6.1 Pan size and drain. The pan shall be not less than $1^1/_2$ inches (38 mm) deep and shall be of sufficient size and shape to receive dripping or condensate from the tank or water heater. The pan shall be drained by an indirect waste pipe of not less than $^3/_4$ inch (19 mm) diameter. Piping for safety pan drains shall be of those materials indicated in Table P2905.5. Where a pan drain was not previously installed, a pan drain shall not be required for a replacement water heater installation.

P2801.6.2 Pan drain termination. The pan drain shall extend full-size and terminate over a suitably located indirect waste receptor or shall extend to the exterior of the building and terminate not less than 6 inches (152 mm) and not more than 24 inches (610 mm) above the adjacent ground surface.

P2801.7 Water heaters installed in garages. Water heaters having an *ignition source* shall be elevated such that the source of ignition is not less than 18 inches (457 mm) above the garage floor.

Exception: Elevation of the *ignition source* is not required for appliances that are *listed* as flammable vapor ignition-resistant.

P2801.8 Water heater seismic bracing. In Seismic Design Categories D_0, D_1 and D_2 and townhouses in Seismic Design Category C, water heaters shall be anchored or strapped in the upper one-third and in the lower one-third of the appliance to resist a horizontal force equal to one-third of the operating weight of the water heater, acting in any horizontal direction, or in accordance with the appliance manufacturer's recommendations.

SECTION P2802
SOLAR WATER HEATING SYSTEMS

P2802.1 Water temperature control. Where heated water is discharged from a solar thermal system to a *hot water* distribution system, a thermostatic mixing valve complying with ASSE 1017 shall be installed to temper the water to a temperature of not greater than 140°F (60°C). Solar thermal systems supplying *hot water* for both space heating and domestic uses shall comply with Section P2802.3. A temperature-indicating device shall be installed to indicate the temperature of the water discharged from the outlet of the mixing valve. The thermostatic mixing valve required by this section shall not be a substitute for water temperature limiting devices required by Chapter 27 for specific fixtures.

P2802.2 Isolation valves. Isolation valves in accordance with P2903.9.2 shall be provided on the cold water feed to the water heater. Isolation valves and associated piping shall be provided to bypass solar storage tanks where the system contains multiple storage tanks.

SECTION P2803
WATER HEATERS USED FOR SPACE HEATING

P2803.1 Protection of potable water. Piping and components connected to a water heater for space heating applications shall be suitable for use with potable water in accordance with Chapter 29. Water heaters that will be used to supply potable water shall not be connected to a heating system or components previously used with nonpotable-water heating *appliances*. Chemicals for boiler treatment shall not be introduced into the water heater.

P2803.2 Temperature control. Where a combination water heater-space heating system requires water for space heating at temperatures exceeding 140°F (60°C), a master thermostatic mixing valve complying with ASSE 1017 shall be installed to temper the water to a temperature of not greater than 140°F (60°C) for domestic uses.

SECTION P2804
RELIEF VALVES

P2804.1 Relief valves required. Appliances and equipment used for heating water or storing hot water shall be protected by one of the following:

1. A separate pressure-relief valve and a separate temperature-relief valve.
2. A combination pressure-and-temperature relief valve.

P2804.2 Rating. Relief valves shall have a minimum rated capacity for the equipment served and shall conform to ANSI Z21.22.

P2804.3 Pressure-relief valves. Pressure-relief valves shall have a relief rating adequate to meet the pressure conditions for the appliances or equipment protected. In tanks, they shall be installed directly into a tank tapping or in a water line close to the tank. They shall be set to open at not less than 25 psi (172 kPa) above the system pressure and not greater than 150 psi (1034 kPa). The relief-valve setting shall not exceed the rated working pressure of the tank.

P2804.4 Temperature-relief valves. Temperature-relief valves shall have a relief rating compatible with the temperature conditions of the appliances or equipment protected. The valves shall be installed such that the temperature-sensing element monitors the water within the top 6 inches (152 mm) of the tank. The valve shall be set to open at a temperature of not greater than 210°F (99°C).

P2804.5 Combination pressure-and-temperature relief valves. Combination pressure and temperature-relief valves shall comply with the requirements for separate pressure- and temperature-relief valves.

P2804.6 Installation of relief valves. A check or shutoff valve shall not be installed in any of the following locations:

1. Between a relief valve and the termination point of the relief valve discharge pipe.
2. Between a relief valve and a tank.
3. Between a relief valve and heating appliances or equipment.

P2804.6.1 Requirements for discharge pipe. The discharge piping serving a pressure-relief valve, temperature-relief valve or combination valve shall:

1. Not be directly connected to the drainage system.
2. Discharge through an air gap located in the same room as the water heater.
3. Not be smaller than the diameter of the outlet of the valve served and shall discharge full size to the air gap.
4. Serve a single relief device and shall not connect to piping serving any other relief device or equipment.
5. Discharge to the floor, to the pan serving the water heater or storage tank, to a waste receptor or to the outdoors.
6. Discharge in a manner that does not cause personal injury or structural damage.
7. Discharge to a termination point that is readily observable by the building occupants.
8. Not be trapped.
9. Be installed to flow by gravity.
10. Terminate not more than 6 inches (152 mm) and not less than two times the discharge pipe diameter above the floor or waste receptor flood level rim.
11. Not have a threaded connection at the end of the piping.
12. Not have valves or tee fittings.
13. Be constructed of those materials indicated in Section P2906.5 or materials tested, rated and *approved* for such use in accordance with ASME A112.4.1.
14. Be one nominal size larger than the size of the relief-valve outlet, where the relief-valve discharge piping is constructed of PEX or PE-RT tubing. The outlet end of such tubing shall be fastened in place.

P2804.7 Vacuum-relief valve. Bottom fed tank-type water heaters and bottom fed tanks connected to water heaters shall have a vacuum-relief valve installed that complies with ANSI Z21.22.

CHAPTER 29

WATER SUPPLY AND DISTRIBUTION

User note: Code change proposals to this chapter will be considered by the IRC – Plumbing and Mechanical Code Development Committee during the 2015 (Group A) Code Development Cycle. See explanation on page xvii.

SECTION P2901
GENERAL

P2901.1 Potable water required. Potable water shall be supplied to plumbing fixtures and plumbing *appliances* except where treated rainwater, treated gray water or municipal reclaimed water is supplied to water closets, urinals and trap primers. The requirements of this section shall not be construed to require signage for water closets and urinals.

P2901.2 Identification of nonpotable water systems. Where *nonpotable* water systems are installed, the piping conveying the nonpotable water shall be identified either by color marking, metal tags or tape in accordance with Sections P2901.2.1 through P2901.2.2.3.

P2901.2.1 Signage required. Nonpotable water outlets such as hose connections, open-ended pipes and faucets shall be identified with signage that reads as follows: "Nonpotable water is utilized for [application name]. CAUTION: NONPOTABLE WATER. DO NOT DRINK." The words shall be legibly and indelibly printed on a tag or sign constructed of corrosion-resistant water-proof material or shall be indelibly printed on the fixture. The letters of the words shall be not less than 0.5 inches (12.7 mm) in height and in colors in contrast to the background on which they are applied. In addition to the required wordage, the pictograph shown in Figure P2901.2.1 shall appear on the required signage.

FIGURE P2901.2.1
PICTOGRAPH—DO NOT DRINK

P2901.2.2 Distribution pipe labeling and marking. Nonpotable distribution piping shall be purple in color and shall be embossed or integrally stamped or marked with the words: "CAUTION: NONPOTABLE WATER— DO NOT DRINK" or the piping shall be installed with a purple identification tape or wrap. Pipe identification shall include the contents of the piping system and an arrow indicating the direction of flow. Hazardous piping systems shall contain information addressing the nature of the hazard. Pipe identification shall be repeated at intervals not exceeding 25 feet (7620 mm) and at each point where the piping passes through a wall, floor or roof. Lettering shall be readily observable within the room or space where the piping is located.

P2901.2.2.1 Color. The color of the pipe identification shall be discernable and consistent throughout the building. The color purple shall be used to identify reclaimed, rain and gray water distribution systems.

P2901.2.2.2 Lettering size. The size of the background color field and lettering shall comply with Table P2901.2.2.2.

P2901.2.2.3 Identification Tape. Where used, identification tape shall be not less than 3 inches (76 mm) wide and have white or black lettering on a purple field stating "CAUTION: NONPOTABLE WATER—DO NOT DRINK." Identification tape shall be installed on top of nonpotable rainwater distribution pipes and fastened not greater than every 10 feet (3048 mm) to each pipe length, and run continuously the entire length of the pipe.

SECTION P2902
PROTECTION OF POTABLE WATER SUPPLY

P2902.1 General. A potable water supply system shall be designed and installed as to prevent contamination from nonpotable liquids, solids or gases being introduced into the potable water supply. Connections shall not be made to a potable

TABLE P2901.2.2.2
SIZE OF PIPE IDENTIFICATION

PIPE DIAMETER (inches)	LENGTH OF BACKGROUND COLOR FIELD (inches)	SIZE OF LETTERS (inches)
$^3/_4$ to $1^1/_4$	8	0.5
$1^1/_2$ to 2	8	0.75
$2^1/_2$ to 6	12	1.25
8 to 10	2	2.5
over 10	32	3.5

For SI: 1 inch = 25.4 mm.

water supply in a manner that could contaminate the water supply or provide a cross-connection between the supply and a source of contamination except where *approved* backflow prevention assemblies, backflow prevention devices or other means or methods are installed to protect the potable water supply. Cross-connections between an individual water supply and a potable public water supply shall be prohibited.

P2902.2 Plumbing fixtures. The supply lines and fittings for every plumbing fixture shall be installed so as to prevent backflow. Plumbing fixture fittings shall provide backflow protection in accordance with ASME A112.18.1/CSA B125.1.

P2902.3 Backflow protection. A means of protection against backflow shall be provided in accordance with Sections P2902.3.1 through P2902.3.6. Backflow prevention applications shall conform to Table P2902.3, except as specifically stated in Sections P2902.4 through P2902.5.5.

P2902.3.1 Air gaps. *Air gaps* shall comply with ASME A112.1.2 and *air gap* fittings shall comply with ASME A112.1.3. An *air gap* shall be measured vertically from the lowest end of a water outlet to the flood level rim of the fixture or receptor into which the water outlets discharges to the floor. The required *air gap* shall be not less than twice the diameter of the effective opening of the outlet and not less than the values specified in Table P2902.3.1.

P2902.3.2 Atmospheric-type vacuum breakers. Atmospheric-type vacuum breakers shall conform to ASSE 1001 or CSA B64.1.1. Hose-connection vacuum breakers shall conform to ASSE 1011, ASSE 1019, ASSE 1035,

TABLE P2902.3
APPLICATION FOR BACKFLOW PREVENTERS

DEVICE	DEGREE OF HAZARD[a]	APPLICATION[b]	APPLICABLE STANDARDS
Backflow Prevention Assemblies			
Double check backflow prevention assembly and double check fire protection backflow prevention assembly	Low hazard	Backpressure or backsiphonage Sizes $^3/_8$″ – 16″	ASSE 1015, AWWA C510, CSA B64.5, CSA B64.5.1
Double check detector fire protection backflow prevention assemblies	Low hazard	Backpressure or backsiphonage Sizes 2″ – 16″	ASSE 1048
Pressure vacuum breaker assembly	High or low hazard	Backsiphonage only Sizes $^1/_2$″ – 2″	ASSE 1020, CSA B64.1.2
Reduced pressure principle backflow prevention assembly and reduced pressure principle fire protection backflow prevention assembly	High or low hazard	Backpressure or backsiphonage Sizes $^3/_8$″ – 16″	ASSE 1013, AWWA C511, CSA B64.4, CSA B64.4.1
Reduced pressure detector fire protection backflow prevention assemblies	High or low hazard	Backsiphonage or backpressure (Fire sprinkler systems)	ASSE 1047
Spill-resistant vacuum breaker	High or low hazard	Backsiphonage only Sizes $^1/_4$″ – 2″	ASSE 1056, CSA B64.1.3
Backflow Preventer Plumbing Devices			
Antisiphon-type fill valves for gravity water closet flush tanks	High hazard	Backsiphonage only	ASSE 1002, CSA B125.3
Backflow preventer with intermediate atmospheric vents	Low hazard	Backpressure or backsiphonage Sizes $^1/_4$" – $^3/_8$"	ASSE 1012, CSA B64.3
Dual-check-valve-type backflow preventers	Low hazard	Backpressure or backsiphonage Sizes $^1/_4$" – 1″	ASSE 1024, CSA B64.6
Hose-connection backflow preventer	High or low hazard	Low head backpressure, rated working pressure backpressure or backsiphonage Sizes $^1/_2$" – 1″	ASSE 1052, CSA B64.2.1.1
Hose-connection vacuum breaker	High or low hazard	Low head backpressure or backsiphonage Sizes $^1/_2$", $^3/_4$", 1″	ASSE 1011, CSA B64.2, B64.2.1
Laboratory faucet backflow preventer	High or low hazard	Low head backpressure and backsiphonage	ASSE 1035, CSA B64.7
Pipe-applied atmospheric-type vacuum breaker	High or low hazard	Backsiphonage only Sizes $^1/_4$" – 4″	ASSE 1001, CSA B64.1.1
Vacuum breaker wall hydrants, frost-resistant, automatic-draining type	High or low hazard	Low head backpressure or backsiphonage Sizes $^3/_4$" – 1″	ASSE 1019, CSA B64.2.2
Other Means Or Methods			
Air gap	High or low hazard	Backsiphonage only	ASME A112.1.2
Air gap fittings for use with plumbing fixtures, appliances and appurtenances	High or low hazard	Backsiphonage or backpressure	ASME A112.1.3

For SI: 1 inch = 25.4 mm.

a. Low hazard—See Pollution (Section R202). High hazard—See Contamination (Section R202).

b. See Backpressure (Section R202). See Backpressure, Low Head (Section R202). See Backsiphonage (Section R202).

TABLE P2902.3.1
MINIMUM AIR GAPS

FIXTURE	MINIMUM AIR GAP	
	Away from a wall[a] (inches)	Close to a wall (inches)
Effective openings greater than 1 inch	Two times the diameter of the effective opening	Three times the diameter of the effective opening
Lavatories and other fixtures with effective opening not greater than $^1/_2$ inch in diameter	1	1.5
Over-rim bath fillers and other fixtures with effective openings not greater than 1 inch in diameter	2	3
Sink, laundry trays, gooseneck back faucets and other fixtures with effective openings not greater than $^3/_4$ inch in diameter	1.5	2.5

For SI: 1 inch = 25.4 mm.

a. Applicable where walls or obstructions are spaced from the nearest inside edge of the spout opening a distance greater than three times the diameter of the effective opening for a single wall, or a distance greater than four times the diameter of the effective opening for two intersecting walls.

ASSE 1052, CSA B64.2, CSA B64.2.1, CSA B64.2.1.1, CSA B64.2.2 or CSA B64.7. Both types of vacuum breakers shall be installed with the outlet continuously open to the atmosphere. The critical level of the atmospheric vacuum breaker shall be set at not less than 6 inches (152 mm) above the highest elevation of downstream piping and the flood level rim of the fixture or device.

P2902.3.3 Backflow preventer with intermediate atmospheric vent. Backflow preventers with intermediate atmospheric vents shall conform to ASSE 1012 or CSA B64.3. These devices shall be permitted to be installed where subject to continuous pressure conditions. These devices shall be prohibited as a means of protection where any hazardous chemical additives are introduced downstream of the device. The relief opening shall discharge by *air gap* and shall be prevented from being submerged.

P2902.3.4 Pressure vacuum breaker assemblies. Pressure vacuum breaker assemblies shall conform to ASSE 1020 or CSA B64.1.2. Spill-resistant vacuum breaker assemblies shall comply with ASSE 1056. These assemblies are designed for installation under continuous pressure conditions where the critical level is installed at the required height. The critical level of a pressure vacuum breaker and a spill-resistant vacuum breaker assembly shall be set at not less than 12 inches (304 mm) above the highest elevation of downstream piping and the flood level rim of the fixture or device. Pressure vacuum breaker assemblies shall not be installed in locations where spillage could cause damage to the structure.

P2902.3.5 Reduced pressure principle backflow prevention assemblies. Reduced pressure principle backflow prevention assemblies and reduced pressure principle fire protection backflow prevention assemblies shall conform to ASSE 1013, AWWA C511, CSA B64.4 or CSA B64.4.1. Reduced pressure detector fire protection backflow prevention assemblies shall conform to ASSE 1047. These devices shall be permitted to be installed where subject to continuous pressure conditions. The relief opening shall discharge by *air gap* and shall be prevented from being submerged.

P2902.3.6 Double check backflow prevention assemblies. Double check backflow prevention assemblies shall conform to ASSE 1015, CSA B64.5, CSA B64.5.1 or AWWA C510. Double check detector fire protection backflow prevention assemblies shall conform to ASSE 1048. These assemblies shall be capable of operating under continuous pressure conditions.

P2902.3.7 Dual check backflow preventer. Dual check backflow preventers shall conform with ASSE 1024 or CSA B64.6. **

P2902.4 Protection of potable water outlets. Potable water openings and outlets shall be protected by an *air gap*, a reduced pressure principle backflow prevention assembly, an atmospheric vent, an atmospheric-type vacuum breaker, a pressure-type vacuum breaker assembly or a hose connection backflow preventer.

P2902.4.1 Fill valves. Flush tanks shall be equipped with an antisiphon fill valve conforming to ASSE 1002 or CSA B125.3. The critical level of the fill valve shall be located not less than 1 inch (25 mm) above the top of the flush tank overflow pipe.

P2902.4.2 Deck-mounted and integral vacuum breakers. *Approved* deck-mounted or equipment-mounted vacuum breakers and faucets with integral atmospheric vacuum breakers or spill–resistant vacuum breaker assemblies shall be installed in accordance with the manufacturer's instructions and the requirements for labeling. The critical level of the breakers and assemblies shall be located at not less than 1 inch (25 mm) above the *flood level rim.*

P2902.4.3 Hose connection. Sillcocks, hose bibbs, wall hydrants and other openings with a hose connection shall be protected by an atmospheric-type or pressure-type vacuum breaker, a pressure vacuum breaker assembly or a permanently attached hose connection vacuum breaker.

Exceptions:

1. This section shall not apply to water heater and boiler drain valves that are provided with hose connection threads and that are intended only for tank or vessel draining.

2. This section shall not apply to water supply valves intended for connection of clothes washing machines where backflow prevention is otherwise provided or is integral with the machine.

P2902.5 Protection of potable water connections. Connections to the potable water shall conform to Sections P2902.5.1 through P2902.5.5.

P2902.5.1 Connections to boilers. Where chemicals will not be introduced into a boiler, the potable water supply to the boiler shall be protected from the boiler by a backflow preventer with an intermediate atmospheric vent complying with ASSE 1012 or CSA B64.3. Where chemicals will be introduced into a boiler, the potable water supply to the boiler shall be protected from the boiler by an *air gap* or a reduced pressure principle backflow prevention assembly complying with ASSE 1013, CSA B64.4 or AWWA C511.

P2902.5.2 Heat exchangers. Heat exchangers using an essentially toxic transfer fluid shall be separated from the potable water by double-wall construction. An *air gap* open to the atmosphere shall be provided between the two walls. Single-wall construction heat exchangers shall be used only where an *essentially nontoxic transfer fluid* is utilized.

P2902.5.3 Lawn irrigation systems. The potable water supply to lawn irrigation systems shall be protected against backflow by an atmospheric vacuum breaker, a pressure vacuum breaker assembly or a reduced pressure principle backflow prevention assembly. Valves shall not be installed downstream from an atmospheric vacuum breaker. Where chemicals are introduced into the system, the potable water supply shall be protected against backflow by a reduced pressure principle backflow prevention assembly.

P2902.5.4 Connections to automatic fire sprinkler systems. The potable water supply to automatic fire sprinkler systems shall be protected against backflow by a double check backflow prevention assembly, a double check fire protection backflow prevention assembly, a reduced pressure principle backflow prevention assembly or a reduced pressure principle fire protection backflow prevention assembly.

Exception: Where systems are installed as a portion of the water distribution system in accordance with the requirements of this code and are not provided with a fire department connection, backflow protection for the water supply system shall not be required.

P2902.5.4.1 Additives or nonpotable source. Where systems contain chemical additives or antifreeze, or where systems are connected to a nonpotable secondary water supply, the potable water supply shall be protected against backflow by a reduced pressure principle backflow prevention assembly or a reduced pressure principle fire protection backflow prevention assembly. Where chemical additives or antifreeze is added to only a portion of an automatic fire sprinkler or standpipe system, the reduced pressure principle fire protection backflow preventer shall be permitted to be located so as to isolate that portion of the system.

P2902.5.5 Solar thermal systems. Where a solar thermal system heats potable water to supply a potable *hot water* distribution or any other type of heating system, the solar thermal system shall be in accordance with Section P2902.5.5.1, P2902.5.5.2 or P2902.5.5.3 as applicable.

P2902.5.5.1 Indirect systems. Water supplies of any type shall not be connected to the solar heating loop of an indirect solar thermal *hot water* heating system. This requirement shall not prohibit the presence of inlets or outlets on the solar heating loop for the purposes of servicing the fluid in the solar heating loop.

P2902.5.5.2 Direct systems for potable water distribution systems. Where a solar thermal system directly heats potable water for a potable water distribution system, the pipe, fittings, valves and other components that are in contact with the potable water in the system shall comply with the requirements of Chapter 29.

P2902.5.5.3 Direct systems for other than potable water distribution systems. Where a solar thermal system directly heats water for a system other than a potable water distribution system, a potable water supply connected to such system shall be protected by a backflow preventer with an intermediate atmospheric vent complying with ASSE 1012. Where a solar thermal system directly heats chemically treated water for a system other than a potable water distribution system, a potable water supply connected to such system shall be protected by a reduced pressure principle backflow prevention assembly complying with ASSE 1013.

P2902.6 Location of backflow preventers. Access shall be provided to backflow preventers as specified by the manufacturer's installation instructions.

P2902.6.1 Outdoor enclosures for backflow prevention devices. Outdoor enclosures for backflow prevention devices shall comply with ASSE 1060.

P2902.6.2 Protection of backflow preventers. Backflow preventers shall not be located in areas subject to freezing except where they can be removed by means of unions, or are protected by heat, insulation or both.

P2902.6.3 Relief port piping. The termination of the piping from the relief port or air gap fitting of the backflow preventer shall discharge to an *approved* indirect waste receptor or to the outdoors where it will not cause damage or create a nuisance.

SECTION P2903
WATER SUPPLY SYSTEM

P2903.1 Water supply system design criteria. The water service and water distribution systems shall be designed and pipe sizes shall be selected such that under conditions of peak demand, the capacities at the point of outlet discharge shall not be less than shown in Table P2903.1.

P2903.2 Maximum flow and water consumption. The maximum water consumption flow rates and quantities for plumbing fixtures and fixture fittings shall be in accordance with Table P2903.2.

TABLE P2903.1
REQUIRED CAPACITIES AT POINT OF OUTLET DISCHARGE

FIXTURE SUPPLY OUTLET SERVING	FLOW RATE (gpm)	FLOW PRESSURE (psi)
Bathtub, balanced-pressure, thermostatic or combination balanced-pressure/thermostatic mixing valve	4	20
Bidet, thermostatic mixing valve	2	20
Dishwasher	2.75	8
Laundry tray	4	8
Lavatory	0.8	8
Shower, balanced-pressure, thermostatic or combination balanced-pressure/thermostatic mixing valve	2.5[a]	20
Sillcock, hose bibb	5	8
Sink	1.75	8
Water closet, flushometer tank	1.6	20
Water closet, tank, close coupled	3	20
Water closet, tank, one-piece	6	20

For SI: 1 pound per square inch = 6.895 kPa, 1 gallon per minute = 3.785 L/m.
a. Where the shower mixing valve manufacturer indicates a lower flow rating for the mixing valve, the lower value shall be applied.

TABLE P2903.2
MAXIMUM FLOW RATES AND CONSUMPTION FOR PLUMBING FIXTURES AND FIXTURE FITTINGS[b]

PLUMBING FIXTURE OR FIXTURE FITTING	PLUMBING FIXTURE OR FIXTURE FITTING
Lavatory faucet	2.2 gpm at 60 psi
Shower head[a]	2.5 gpm at 80 psi
Sink faucet	2.2 gpm at 60 psi
Water closet	1.6 gallons per flushing cycle

For SI: 1 gallon per minute = 3.785 L/m,
1 pound per square inch = 6.895 kPa.
a. A handheld shower spray shall be considered a shower head.
b. Consumption tolerances shall be determined from referenced standards.

P2903.3 Minimum pressure. Where the water pressure supplied by the public water main or an individual water supply system is insufficient to provide for the minimum pressures and quantities for the plumbing fixtures in the building, the pressure shall be increased by means of an elevated water tank, a hydropnuematic pressure booster system or a water pressure booster pump.

P2903.3.1 Maximum pressure. The static water pressure shall be not greater than 80 psi (551 kPa). Where the main pressure exceeds 80 psi (551 kPa), an *approved* pressure-reducing valve conforming to ASSE 1003 or CSA B356 shall be installed on the domestic water branch main or riser at the connection to the water service pipe.

P2903.4 Thermal expansion control. A means for controlling increased pressure caused by thermal expansion shall be installed where required in accordance with Sections P2903.4.1 and P2903.4.2.

P2903.4.1 Pressure-reducing valve. For water service system sizes up to and including 2 inches (51 mm), a device for controlling pressure shall be installed where, because of thermal expansion, the pressure on the downstream side of a pressure-reducing valve exceeds the pressure-reducing valve setting.

P2903.4.2 Backflow prevention device or check valve. Where a backflow prevention device, check valve or other device is installed on a water supply system using storage water heating equipment such that thermal expansion causes an increase in pressure, a device for controlling pressure shall be installed.

P2903.5 Water hammer. The flow velocity of the water distribution system shall be controlled to reduce the possibility of water hammer. Water-hammer arrestors shall be installed in accordance with the manufacturer's instructions. Water-hammer arrestors shall conform to ASSE 1010.

P2903.6 Determining water supply fixture units. Supply loads in the building water distribution system shall be determined by total load on the pipe being sized, in terms of water supply fixture units (w.s.f.u.), as shown in Table P2903.6, and gallon per minute (gpm) flow rates [see Table P2903.6(1)]. For fixtures not listed, choose a w.s.f.u. value of a fixture with similar flow characteristics.

TABLE P2903.6
WATER-SUPPLY FIXTURE-UNIT VALUES FOR VARIOUS PLUMBING FIXTURES AND FIXTURE GROUPS

TYPE OF FIXTURES OR GROUP OF FIXTURES	WATER-SUPPLY FIXTURE-UNIT VALUE (w.s.f.u.)		
	Hot	Cold	Combined
Bathtub (with/without overhead shower head)	1.0	1.0	1.4
Clothes washer	1.0	1.0	1.4
Dishwasher	1.4	—	1.4
Full-bath group with bathtub (with/without shower head) or shower stall	1.5	2.7	3.6
Half-bath group (water closet and lavatory)	0.5	2.5	2.6
Hose bibb (sillcock)[a]	—	2.5	2.5
Kitchen group (dishwasher and sink with or without food-waste disposer)	1.9	1.0	2.5
Kitchen sink	1.0	1.0	1.4
Laundry group (clothes washer standpipe and laundry tub)	1.8	1.8	2.5
Laundry tub	1.0	1.0	1.4
Lavatory	0.5	0.5	0.7
Shower stall	1.0	1.0	1.4
Water closet (tank type)	—	2.2	2.2

For SI: 1 gallon per minute = 3.785 L/m.

a. The fixture unit value 2.5 assumes a flow demand of 2.5 gpm, such as for an individual lawn sprinkler device. If a hose bibb or sill cock will be required to furnish a greater flow, the equivalent fixture-unit value may be obtained from this table or Table P2903.6(1).

TABLE P2903.6(1)
CONVERSIONS FROM WATER SUPPLY FIXTURE UNIT TO GALLON PER MINUTE FLOW RATES

SUPPLY SYSTEMS PREDOMINANTLY FOR FLUSH TANKS			SUPPLY SYSTEMS PREDOMINANTLY FOR FLUSHOMETER VALVES		
Load	Demand		Load	Demand	
(Water supply fixture units)	(Gallons per minute)	(Cubic feet per minute)	(Water supply fixture units)	(Gallons per minute)	(Cubic feet per minute)
1	3.0	0.04104	—	—	—
2	5.0	0.0684	—	—	—
3	6.5	0.86892	—	—	—
4	8.0	1.06944	—	—	—
5	9.4	1.256592	5	15.0	2.0052
6	10.7	1.430376	6	17.4	2.326032
7	11.8	1.577424	7	19.8	2.646364
8	12.8	1.711104	8	22.2	2.967696
9	13.7	1.831416	9	24.6	3.288528
10	14.6	1.951728	10	27.0	3.60936
11	15.4	2.058672	11	27.8	3.716304
12	16.0	2.13888	12	28.6	3.823248
13	16.5	2.20572	13	29.4	3.930192
14	17.0	2.27256	14	30.2	4.037136
15	17.5	2.3394	15	31.0	4.14408
16	18.0	2.90624	16	31.8	4.241024
17	18.4	2.459712	17	32.6	4.357968
18	18.8	2.513184	18	33.4	4.464912
19	19.2	2.566656	19	34.2	4.571856
20	19.6	2.620128	20	35.0	4.6788

(continued)

TABLE P2903.6(1)—continued
CONVERSIONS FROM WATER SUPPLY FIXTURE UNIT TO GALLON PER MINUTE FLOW RATES

SUPPLY SYSTEMS PREDOMINANTLY FOR FLUSH TANKS			SUPPLY SYSTEMS PREDOMINANTLY FOR FLUSHOMETER VALVES		
Load	Demand		Load	Demand	
(Water supply fixture units)	(Gallons per minute)	(Cubic feet per minute)	(Water supply fixture units)	(Gallons per minute)	(Cubic feet per minute)
25	21.5	2.87412	25	38.0	5.07984
30	23.3	3.114744	30	42.0	5.61356
35	24.9	3.328632	35	44.0	5.88192
40	26.3	3.515784	40	46.0	6.14928
45	27.7	3.702936	45	48.0	6.41664
50	29.1	3.890088	50	50.0	6.684

For SI: 1 gallon per minute = 3.785 L/m, 1 cubic foot per minute = 0.4719 L/s.

P2903.7 Size of water-service mains, branch mains and risers. The size of the water service pipe shall be not less than $^3/_4$ inch (19 mm) diameter. The size of water service mains, branch mains and risers shall be determined from the water supply demand [gpm (L/m)], available water pressure [psi (kPa)] and friction loss caused by the water meter and *developed length* of pipe [feet (m)], including *equivalent length* of fittings. The size of each water distribution system shall be determined according to design methods conforming to acceptable engineering practice, such as those methods in Appendix P and shall be *approved* by the code official.

P2903.8 Gridded and parallel water distribution systems. Hot water and cold water manifolds installed with parallel-connected individual distribution lines and cold water manifolds installed with gridded distribution lines to each fixture or fixture fitting shall be designed in accordance with Sections P2903.8.1 through P2903.8.5. Gridded systems for hot water distribution systems shall be prohibited.

P2903.8.1 Sizing of manifolds. Manifolds shall be sized in accordance with Table P2903.8.1. Total gallons per minute is the demand for all outlets.

TABLE P2903.8.1
MANIFOLD SIZING

PLASTIC		METALLIC	
Nominal Size ID (inches)	Maximum[a] gpm	Nominal Size ID (inches)	Maximum[a] gpm
$^3/_4$	17	$^3/_4$	11
1	29	1	20
$1^1/_4$	46	$1^1/_4$	31
$1^1/_2$	66	$1^1/_2$	44

For SI: 1 inch = 25.4 mm, 1 gallon per minute = 3.785 L/m, 1 foot per second = 0.3048 m/s.

Note: See Table P2903.6(1) for w.s.f.u and Table 2903.6(1) for gallon-per-minute (gpm) flow rates.

a. Based on velocity limitation: plastic-12 fps; metal-8 fps.

P2903.8.2 Minimum size. Where the *developed length* of the distribution line is 60 feet (18 288 mm) or less, and the available pressure at the meter is not less than 40 pounds per square inch (276 kPa), the size of individual distribution lines shall be not less than $^3/_8$ inch (10 mm) diameter. Certain fixtures such as one-piece water closets and whirlpool bathtubs shall require a larger size where specified by the manufacturer. If a water heater is fed from the end of a cold water manifold, the manifold shall be one size larger than the water heater feed.

P2903.8.3 Support and protection. Plastic piping bundles shall be secured in accordance with the manufacturer's instructions and supported in accordance with Section P2605. Bundles that have a change in direction equal to or greater than 45 degrees (0.79 rad) shall be protected from chafing at the point of contact with framing members by sleeving or wrapping.

P2903.8.4 Valving. Fixture valves, when installed, shall be located either at the fixture or at the manifold. Valves installed at the manifold shall be labeled indicating the fixture served.

P2903.8.5 Hose bibb bleed. A *readily accessible* air bleed shall be installed in hose bibb supplies at the manifold or at the hose bibb exit point.

P2903.9 Valves. Valves shall be installed in accordance with Sections P2903.9.1 through P2903.9.5.

P2903.9.1 Service valve. Each *dwelling unit* shall be provided with an accessible main shutoff valve near the entrance of the water service. The valve shall be of a full-open type having nominal restriction to flow, with provision for drainage such as a bleed orifice or installation of a separate drain valve. Additionally, the water service shall be valved at the curb or lot line in accordance with local requirements.

P2903.9.2 Water heater valve. A *readily accessible* full-open valve shall be installed in the cold-water supply pipe to each water heater at or near the water heater.

P2903.9.3 Fixture valves and access. Shutoff valves shall be required on each fixture supply pipe to each plumbing appliance and to each plumbing fixture other than bathtubs and showers. Valves serving individual plumbing fixtures, *plumbing appliances,* risers and branches shall be *accessible.*

P2903.9.4 Valve requirements. Valves shall be compatible with the type of piping material installed in the system. Valves shall conform to one of the standards listed in

Table P2903.9.4 or shall be *approved.* Valves intended to supply drinking water shall meet the requirements of NSF 61.

P2903.9.5 Valves and outlets prohibited below grade. Potable water outlets and combination stop-and-waste valves shall not be installed underground or below grade. Freezeproof yard hydrants that drain the riser into the ground are considered to be stop-and-waste valves.

Exception: Installation of freezeproof yard hydrants that drain the riser into the ground shall be permitted if the potable water supply to such hydrants is protected upstream of the hydrants in accordance with Section P2902 and the hydrants are permanently identified as nonpotable outlets by *approved* signage that reads as follows: "Caution, Nonpotable Water. Do Not Drink."

P2903.10 Hose bibb. Hose bibbs subject to freezing, including the "frostproof" type, shall be equipped with an accessible stop-and-waste-type valve inside the building so that they can be controlled and drained during cold periods.

Exception: Frostproof hose bibbs installed such that the stem extends through the building insulation into an open heated or semi*conditioned space* need not be separately valved (see Figure P2903.10).

P2903.11 Drain water heat recovery units. Drain water heat recovery units shall be in accordance with Section N1103.5.4.

TABLE P2903.9.4
VALVES

MATERIAL	STANDARD
Chlorinated polyvinyl chloride (CPVC) plastic	ASME A112.4.14, ASME A112.18.1/CSA B125.1, ASTM F 1970, CSA B125.3
Copper or copper alloy	ASME A112.4.14, ASME A112.18.1/CSA B125.1, ASME B16.34, CSA B125.3, MSS SP-67, MSS SP-80, MSS SP-110
Gray and ductile iron	ASTM A126, AWWA C500, AWWA C504, AWWA C507, MSS SP-42, MSS SP-67, MSS SP-70, MSS SP-71, MSS SP-72, MSS SP-78
Cross-linked polyethylene (PEX) plastic	ASME A112.4.14, ASME A112.18.1/CSA B125.1, CSA B125.3, NSF 359
Polypropylene (PP) plastic	ASME A112.4.14, ASTM F 2389
Polyvinyl chloride (PVC) plastic	ASME A112.4.14, ASTM F 1970

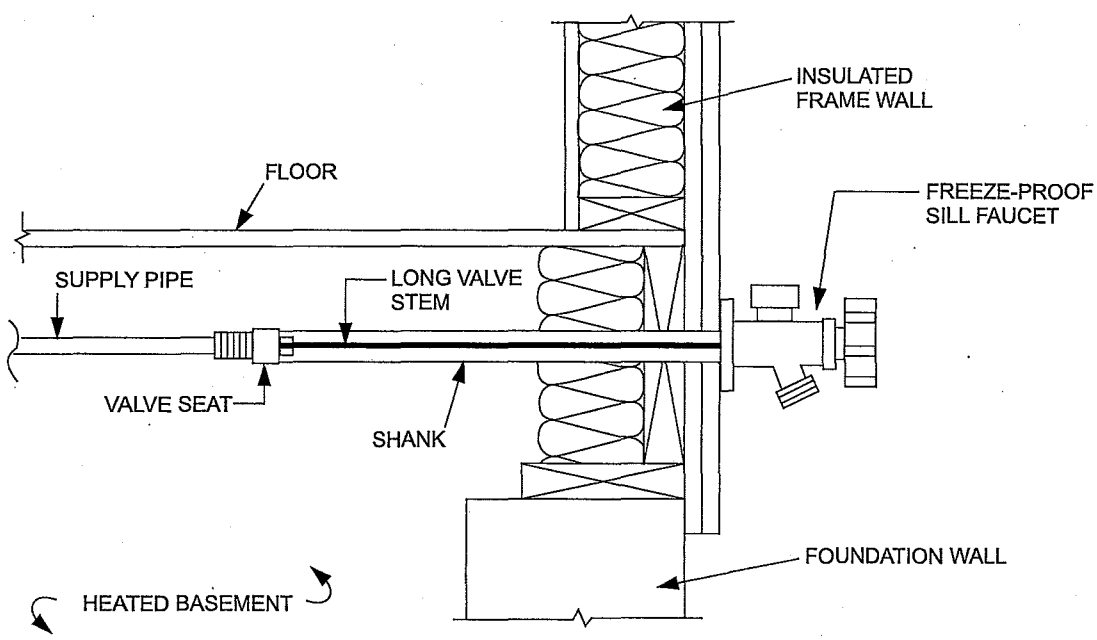

FIGURE P2903.10
TYPICAL FROSTPROOF HOSE BIBB INSTALLATION NOT REQUIRING SEPARATE VALUE

SECTION P2904
DWELLING UNIT FIRE SPRINKLER SYSTEMS

P2904.1 General. The design and installation of residential fire sprinkler systems shall be in accordance with NFPA 13D or Section P2904, which shall be considered equivalent to NFPA 13D. Partial residential sprinkler systems shall be permitted to be installed only in buildings not required to be equipped with a residential sprinkler system. Section P2904 shall apply to stand-alone and multipurpose wet-pipe sprinkler systems that do not include the use of antifreeze. A multipurpose fire sprinkler system shall provide domestic water to both fire sprinklers and plumbing fixtures. A stand-alone sprinkler system shall be separate and independent from the water distribution system. A backflow preventer shall not be required to separate a stand-alone sprinkler system from the water distribution system.

P2904.1.1 Required sprinkler locations. Sprinklers shall be installed to protect all areas of a *dwelling unit.*

Exceptions:

1. Attics, crawl spaces and normally unoccupied concealed spaces that do not contain fuel-fired appliances do not require sprinklers. In *attics*, crawl spaces and normally unoccupied concealed spaces that contain fuel-fired equipment, a sprinkler shall be installed above the equipment; however, sprinklers shall not be required in the remainder of the space.
2. Clothes closets, linen closets and pantries not exceeding 24 square feet (2.2 m^2) in area, with the smallest dimension not greater than 3 feet (915 mm) and having wall and ceiling surfaces of gypsum board.
3. Bathrooms not more than 55 square feet (5.1 m^2) in area.
4. Garages; carports; exterior porches; unheated entry areas, such as mud rooms, that are adjacent to an exterior door; and similar areas.

P2904.2 Sprinklers. Sprinklers shall be new listed residential sprinklers and shall be installed in accordance with the sprinkler manufacturer's instructions.

P2904.2.1 Temperature rating and separation from heat sources. Except as provided for in Section P2904.2.2, sprinklers shall have a temperature rating of not less than 135°F (57°C) and not more than 170°F (77°C). Sprinklers shall be separated from heat sources as required by the sprinkler manufacturer's installation instructions.

P2904.2.2 Intermediate temperature sprinklers. Sprinklers shall have an intermediate temperature rating not less than 175°F (79°C) and not more than 225°F (107°C) where installed in the following locations:

1. Directly under skylights, where the sprinkler is exposed to direct sunlight.
2. In *attics*.
3. In concealed spaces located directly beneath a roof.
4. Within the distance to a heat source as specified in Table P2904.2.2

P2904.2.3 Freezing areas. Piping shall be protected from freezing as required by Section P2603.6. Where sprinklers are required in areas that are subject to freezing, dry-sidewall or dry-pendent sprinklers extending from a nonfreezing area into a freezing area shall be installed.

P2904.2.4 Sprinkler coverage. Sprinkler coverage requirements and sprinkler obstruction requirements shall be in accordance with Sections P2904.2.4.1 and P2904.2.4.2.

P2904.2.4.1 Coverage area limit. The area of coverage of a single sprinkler shall not exceed 400 square feet (37 m^2) and shall be based on the sprinkler listing and the sprinkler manufacturer's installation instructions.

TABLE P2904.2.2
LOCATIONS WHERE INTERMEDIATE TEMPERATURE SPRINKLERS ARE REQUIRED

HEAT SOURCE	RANGE OF DISTANCE FROM HEAT SOURCE WITHIN WHICH INTERMEDIATE TEMPERATURE SPRINKLERS ARE REQUIRED[a, b] (inches)
Fireplace, side of open or recessed fireplace	12 to 36
Fireplace, front of recessed fireplace	36 to 60
Coal and wood burning stove	12 to 42
Kitchen range top	9 to 18
Oven	9 to 18
Vent connector or chimney connector	9 to 18
Heating duct, not insulated	9 to 18
Hot water pipe, not insulated	6 to 12
Side of ceiling or wall warm air register	12 to 24
Front of wall mounted warm air register	18 to 36
Water heater, furnace or boiler	3 to 6
Luminaire up to 250 watts	3 to 6
Luminaire 250 watts up to 499 watts	6 to 12

For SI: 1 inch = 25.4 mm.

a. Sprinklers shall not be located at distances less than the minimum table distance unless the sprinkler listing allows a lesser distance.

b. Distances shall be measured in a straight line from the nearest edge of the heat source to the nearest edge of the sprinkler.

P2904.2.4.2 Obstructions to coverage. Sprinkler discharge shall not be blocked by obstructions unless additional sprinklers are installed to protect the obstructed area. Additional sprinklers shall not be required where the sprinkler separation from obstructions complies with either the minimum distance indicated in Figure P2904.2.4.2 or the minimum distances specified in the sprinkler manufacturer's instructions where the manufacturer's instructions permit a lesser distance.

P2904.2.4.2.1 Additional requirements for pendent sprinklers. Pendent sprinklers within 3 feet (915 mm) of the center of a ceiling fan, surface-mounted ceiling luminaire or similar object shall be considered to be obstructed, and additional sprinklers shall be installed.

P2904.2.4.2.2 Additional requirements for sidewall sprinklers. Sidewall sprinklers within 5 feet (1524 mm) of the center of a ceiling fan, surface-mounted ceiling luminaire or similar object shall be considered to be obstructed, and additional sprinklers shall be installed.

P2904.2.5 Sprinkler installation on systems assembled with solvent cement. The solvent cementing of threaded adapter fittings shall be completed and threaded adapters for sprinklers shall be verified as being clear of excess cement prior to the installation of sprinklers on systems assembled with solvent cement.

P2904.2.6 Sprinkler modifications prohibited. Painting, caulking or modifying of sprinklers shall be prohibited. Sprinklers that have been painted, caulked, modified or damaged shall be replaced with new sprinklers.

P2904.3 Sprinkler piping system. Sprinkler piping shall be supported in accordance with requirements for cold water distribution piping. Sprinkler piping shall comply with the requirements for cold water distribution piping. For multipurpose piping systems, the sprinkler piping shall connect to and be a part of the cold water distribution piping system.

Exception: For plastic piping, it shall be permissible to follow the manufacturer's installation instructions.

P2904.3.1 Nonmetallic pipe and tubing. Nonmetallic pipe and tubing, such as CPVC, PEX, and PE-RT shall be listed for use in residential fire sprinkler systems.

P2904.3.1.1 Nonmetallic pipe protection. Nonmetallic pipe and tubing systems shall be protected from exposure to the living space by a layer of not less than $^3/_8$-inch-thick (9.5 mm) gypsum wallboard, $^1/_2$-inch-thick (13 mm) plywood, or other material having a 15-minute fire rating.

Exceptions:

1. Pipe protection shall not be required in areas that do not require protection with sprinklers as specified in Section P2904.1.1.
2. Pipe protection shall not be required where exposed piping is permitted by the pipe listing.

PENDANT SPRINKLER TO SIDE OBSTRUCTION

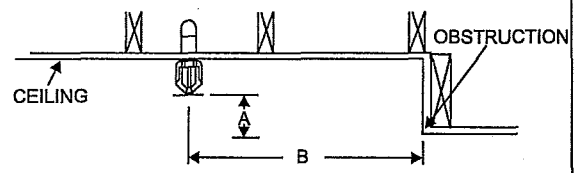

WHERE A IS LESS THAN OR EQUAL TO: (INCHES)	WHERE A IS LESS THAN OR EQUAL TO: (FEET)
1	1½
3	3
5	4
7	4½
9	6
11	6½
14	7

SIDEWALL SPRINKLER TO SIDE OBSTRUCTION

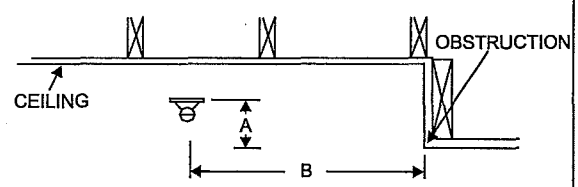

WHERE A IS LESS THAN OR EQUAL TO: (INCHES)	WHERE A IS LESS THAN OR EQUAL TO: (FEET)
1	1½
3	3
5	4
7	4½
9	6
11	6½
14	7

SIDEWALL SPRINKLER TO FORWARD OBSTRUCTION

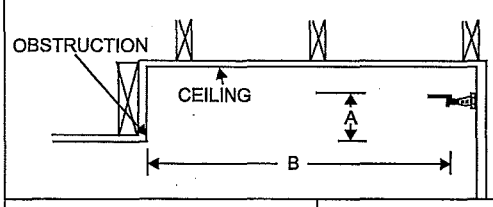

WHERE A IS LESS THAN OR EQUAL TO: (INCHES)	WHERE A IS LESS THAN OR EQUAL TO: (FEET)
1	8
2	10
3	11
4	12
6	13
7	14
9	15
11	16
14	17

For SI: 1 inch = 25.4 mm, 1 foot = 304.8 mm.

FIGURE P2904.2.4.2
MINIMUM ALLOWABLE DISTANCE BETWEEN SPRINKLER AND OBSTRUCTION

P2904.3.2 Shutoff valves prohibited. With the exception of shutoff valves for the entire water distribution system, valves shall not be installed in any location where the valve would isolate piping serving one or more sprinklers.

P2904.3.3 Single dwelling limit. Piping beyond the service valve located at the beginning of the water distribution system shall not serve more than one *dwelling*.

P2904.3.4 Drain. A means to drain the sprinkler system shall be provided on the system side of the water distribution shutoff valve.

P2904.4 Determining system design flow. The flow for sizing the sprinkler piping system shall be based on the flow rating of each sprinkler in accordance with Section P2904.4.1 and the calculation in accordance with Section P2904.4.2.

P2904.4.1 Determining required flow rate for each sprinkler. The minimum required flow for each sprinkler shall be determined using the sprinkler manufacturer's published data for the specific sprinkler model based on all of the following:

1. The area of coverage.
2. The ceiling configuration.
3. The temperature rating.
4. Any additional conditions specified by the sprinkler manufacturer.

P2904.4.2 System design flow rate. The design flow rate for the system shall be based on the following:

1. The design flow rate for a room having only one sprinkler shall be the flow rate required for that sprinkler, as determined by Section P2904.4.1.
2. The design flow rate for a room having two or more sprinklers a shall be determined by identifying the sprinkler in that room with the highest required flow rate, based on Section P2904.4.1, and multiplying that flow rate by 2.
3. Where the sprinkler manufacturer specifies different criteria for ceiling configurations that are not smooth, flat and horizontal, the required flow rate for that room shall comply with the sprinkler manufacturer's instructions.
4. The design flow rate for the sprinkler system shall be the flow required by the room with the largest flow rate, based on Items 1, 2 and 3.
5. For the purpose of this section, it shall be permissible to reduce the design flow rate for a room by subdividing the space into two or more rooms, where each room is evaluated separately with respect to the required design flow rate. Each room shall be bounded by walls and a ceiling. Openings in walls shall have a lintel not less than 8 inches (203 mm) in depth and each lintel shall form a solid barrier between the ceiling and the top of the opening.

P2904.5 Water supply. The water supply shall provide not less than the required design flow rate for sprinklers in accordance with Section P2904.4.2 at a pressure not less than that used to comply with Section P2904.6.

P2904.5.1 Water supply from individual sources. Where a *dwelling unit* water supply is from a tank system, a private well system or a combination of these, the available water supply shall be based on the minimum pressure control setting for the pump.

P2904.5.2 Required capacity. The water supply shall have the capacity to provide the required design flow rate for sprinklers for a period of time as follows:

1. Seven minutes for *dwelling units* one *story* in height and less than 2,000 square feet (186 m^2) in area.
2. Ten minutes for *dwelling units* two or more stories in height or equal to or greater than 2,000 square feet (186 m^2) in area.

Where a well system, a water supply tank system or a combination thereof is used, any combination of well capacity and tank storage shall be permitted to meet the capacity requirement.

P2904.6 Pipe sizing. The piping to sprinklers shall be sized for the flow required by Section P2904.4.2. The flow required to supply the plumbing fixtures shall not be required to be added to the sprinkler design flow.

P2904.6.1 Method of sizing pipe. Piping supplying sprinklers shall be sized using the prescriptive method in Section P2904.6.2 or by hydraulic calculation in accordance with NFPA 13D. The minimum pipe size from the water supply source to any sprinkler shall be $^3/_4$ inch (19 mm) nominal. Threaded adapter fittings at the point where sprinklers are attached to the piping shall be not less than $^1/_2$ inch (13 mm) nominal.

P2904.6.2 Prescriptive pipe sizing method. Pipe shall be sized by determining the available pressure to offset friction loss in piping and identifying a piping material, diameter and length using the equation in Section P2904.6.2.1 and the procedure in Section P2904.6.2.2.

P2904.6.2.1 Available pressure equation. The pressure available to offset friction loss in the interior piping system (P_t) shall be determined in accordance with the Equation 29-1.

$$P_t = P_{sup} - PL_{svc} - PL_m - PL_d - PL_e - P_{sp} \quad \textbf{(Equation 29-1)}$$

where:

P_t = Pressure used in applying Tables P2904.6.2(4) through P2904.6.2(9).

P_{sup} = Pressure available from the water supply source.

PL_{svc} = Pressure loss in the water-service pipe.

PL_m = Pressure loss in the water meter.

PL_d = Pressure loss from devices other than the water meter.

PL_e = Pressure loss associated with changes in elevation.

P_{sp} = Maximum pressure required by a sprinkler.

P2904.6.2.2 Calculation procedure. Determination of the required size for water distribution piping shall be in accordance with the following procedure:

Step 1—Determine P_{sup}

Obtain the static supply pressure that will be available from the water main from the water purveyor, or for an individual source, the available supply pressure shall be in accordance with Section P2904.5.1.

Step 2—Determine PL_{svc}

Use Table P2904.6.2(1) to determine the pressure loss in the water service pipe based on the selected size of the water service.

Step 3—Determine PL_m

Use Table P2904.6.2(2) to determine the pressure loss from the water meter, based on the selected water meter size.

Step 4—Determine PL_d

Determine the pressure loss from devices other than the water meter installed in the piping system supplying sprinklers, such as pressure-reducing valves, backflow preventers, water softeners or water filters. Device pressure losses shall be based on the device manufacturer's specifications. The flow rate used to determine pressure loss shall be the rate from Section P2904.4.2, except that 5 gpm (0.3 L/s) shall be added where the device is installed in a water-service pipe that supplies more than one *dwelling*. As an alternative to deducting pressure loss for a device, an automatic bypass valve shall be installed to divert flow around the device when a sprinkler activates.

Step 5—Determine PL_e

Use Table P2904.6.2(3) to determine the pressure loss associated with changes in elevation. The elevation used in applying the table shall be the difference between the elevation where the water source pressure was measured and the elevation of the highest sprinkler.

Step 6—Determine P_{sp}

Determine the maximum pressure required by any individual sprinkler based on the flow rate from Section P2904.4.1. The required pressure is provided in the sprinkler manufacturer's published data for the specific sprinkler model based on the selected flow rate.

Step 7—Calculate P_t

Using Equation 29-1, calculate the pressure available to offset friction loss in water-distribution piping between the service valve and the sprinklers.

Step 8—Determine the maximum allowable pipe length

Use Tables P2904.6.2(4) through P2904.6.2(9) to select a material and size for water distribution piping. The piping material and size shall be acceptable if the *developed length* of pipe between the service valve and the most remote sprinkler does not exceed the maximum allowable length specified by the applicable table. Interpolation of P_t between the tabular values shall be permitted.

TABLE P2904.6.2(1)
WATER SERVICE PRESSURE LOSS (PL_{svc})[a, b]

FLOW RATE[c] (gpm)	3/4-INCH WATER SERVICE PRESSURE LOSS (psi)				1-INCH WATER SERVICE PRESSURE LOSS (psi)				1 1/4-INCH WATER SERVICE PRESSURE LOSS (psi)			
	Length of water service pipe (feet)				Length of water service pipe (feet)				Length of water service pipe (feet)			
	40 or less	41 to 75	76 to 100	101 to 150	40 or less	41 to 75	76 to 100	101 to 150	40 or less	41 to 75	76 to 100	101 to 150
8	5.1	8.7	11.8	17.4	1.5	2.5	3.4	5.1	0.6	1.0	1.3	1.9
10	7.7	13.1	17.8	26.3	2.3	3.8	5.2	7.7	0.8	1.4	2.0	2.9
12	10.8	18.4	24.9	NP	3.2	5.4	7.3	10.7	1.2	2.0	2.7	4.0
14	14.4	24.5	NP	NP	4.2	7.1	9.6	14.3	1.6	2.7	3.6	5.4
16	18.4	NP	NP	NP	5.4	9.1	12.4	18.3	2.0	3.4	4.7	6.9
18	22.9	NP	NP	NP	6.7	11.4	15.4	22.7	2.5	4.3	5.8	8.6
20	27.8	NP	NP	NP	8.1	13.8	18.7	27.6	3.1	5.2	7.0	10.4
22	NP	NP	NP	NP	9.7	16.5	22.3	NP	3.7	6.2	8.4	12.4
24	NP	NP	NP	NP	11.4	19.3	26.2	NP	4.3	7.3	9.9	14.6
26	NP	NP	NP	NP	13.2	22.4	NP	NP	5.0	8.5	11.4	16.9
28	NP	NP	NP	NP	15.1	25.7	NP	NP	5.7	9.7	13.1	19.4
30	NP	NP	NP	NP	17.2	NP	NP	NP	6.5	11.0	14.9	22.0
32	NP	NP	NP	NP	19.4	NP	NP	NP	7.3	12.4	16.8	24.8
34	NP	NP	NP	NP	21.7	NP	NP	NP	8.2	13.9	18.8	NP
36	NP	NP	NP	NP	24.1	NP	NP	NP	9.1	15.4	20.9	NP

For SI: 1 inch = 25.4 mm, 1 foot = 304.8 mm, 1 gallon per minute = 0.063 L/s, 1 pound per square inch = 6.895 kPa.

NP = Not permitted. Pressure loss exceeds reasonable limits.

a. Values are applicable for underground piping materials listed in Table P2905.4 and are based on an SDR of 11 and a Hazen Williams C Factor of 150.

b. Values include the following length allowances for fittings: 25% length increase for actual lengths up to 100 feet and 15% length increase for actual lengths over 100 feet.

c. Flow rate from Section P2904.4.2. Add 5 gpm to the flow rate required by Section P2904.4.2 where the water-service pipe supplies more than one dwelling.

The maximum allowable length of piping in Tables P2904.6.2(4) through P2904.6.2(9) incorporates an adjustment for pipe fittings. Additional consideration of friction losses associated with pipe fittings shall not be required.

P2904.7 Instructions and signs. An owner's manual for the fire sprinkler system shall be provided to the owner. A sign or valve tag shall be installed at the main shutoff valve to the water distribution system stating the following: "Warning, the water system for this home supplies fire sprinklers that require certain flows and pressures to fight a fire. Devices that restrict the flow or decrease the pressure or automatically shut off the water to the fire sprinkler system, such as water softeners, filtration systems and automatic shutoff valves, shall not be added to this system without a review of the fire sprinkler system by a fire protection specialist. Do not remove this sign."

P2904.8 Inspections. The water distribution system shall be inspected in accordance with Sections P2904.8.1 and P2904.8.2.

P2904.8.1 Preconcealment inspection. The following items shall be verified prior to the concealment of any sprinkler system piping:

1. Sprinklers are installed in all areas as required by Section P2904.1.1.
2. Where sprinkler water spray patterns are obstructed by construction features, luminaires or ceiling fans, additional sprinklers are installed as required by Section P2904.2.4.2.
3. Sprinklers are the correct temperature rating and are installed at or beyond the required separation dis-

TABLE P2904.6.2(2)
MINIMUM WATER METER PRESSURE LOSS (PL_m)[a]

FLOW RATE (gallons per minute, gpm)[b]	5/8-INCH METER PRESSURE LOSS (pounds per square inch, psi)	3/4-INCH METER PRESSURE LESS (pounds per square inch, psi)	1-INCH METER PRESSURE LOSS (pounds per square inch, psi)
8	2	1	1
10	3	1	1
12	4	1	1
14	5	2	1
16	7	3	1
18	9	4	1
20	11	4	2
22	NP	5	2
24	NP	5	2
26	NP	6	2
28	NP	6	2
30	NP	7	2
32	NP	7	3
34	NP	8	3
36	NP	8	3

For SI: 1 inch = 25.4 mm, 1 pound per square inch = 6.895 kPa, 1 gallon per minute = 0.063 L/s.

NP—Not permitted unless the actual water meter pressure loss is known.

a. Table P2904.6.2(2) establishes conservative values for water meter pressure loss or installations where the water meter loss is unknown. Where the actual water meter pressure loss is known, P_m shall be the actual loss.

b. Flow rate from Section P2904.4.2. Add 5 gpm to the flow rate required by Section P2904.4.2 where the water-service pipe supplies more than one dwelling.

TABLE P2904.6.2(3)
ELEVATION LOSS (PL_e)

ELEVATION (feet)	PRESSURE LOSS (psi)
5	2.2
10	4.4
15	6.5
20	8.7
25	10.9
30	13
35	15.2
40	17.4

For SI: 1 foot = 304.8 mm, 1 pound per square inch = 6.895 kPa.

tances from heat sources as required by Sections P2904.2.1 and P2904.2.2.

4. The pipe size equals or exceeds the size used in applying Tables P2904.6.2(4) through P2904.6.2(9) or, if the piping system was hydraulically calculated in accordance with Section P2904.6.1, the size used in the hydraulic calculation.
5. The pipe length does not exceed the length permitted by Tables P2904.6.2(4) through P2904.6.2(9) or, if the piping system was hydraulically calculated in accordance with Section P2904.6.1, pipe lengths and fittings do not exceed those used in the hydraulic calculation.
6. Nonmetallic piping that conveys water to sprinklers is listed for use with fire sprinklers.
7. Piping is supported in accordance with the pipe manufacturer's and sprinkler manufacturer's installation instructions.
8. The piping system is tested in accordance with Section P2503.7.

TABLE P2904.6.2(4)
ALLOWABLE PIPE LENGTH FOR $^3/_4$-INCH TYPE M COPPER WATER TUBING

SPRINKLER FLOW RATE[a] (gpm)	WATER DISTRIBUTION SIZE (inch)	AVAILABLE PRESSURE—P_t (psi)									
		15	20	25	30	35	40	45	50	55	60
		Allowable length of pipe from service valve to farthest sprinkler (feet)									
8	$^3/_4$	217	289	361	434	506	578	650	723	795	867
9	$^3/_4$	174	232	291	349	407	465	523	581	639	697
10	$^3/_4$	143	191	239	287	335	383	430	478	526	574
11	$^3/_4$	120	160	200	241	281	321	361	401	441	481
12	$^3/_4$	102	137	171	205	239	273	307	341	375	410
13	$^3/_4$	88	118	147	177	206	235	265	294	324	353
14	$^3/_4$	77	103	128	154	180	205	231	257	282	308
15	$^3/_4$	68	90	113	136	158	181	203	226	248	271
16	$^3/_4$	60	80	100	120	140	160	180	200	220	241
17	$^3/_4$	54	72	90	108	125	143	161	179	197	215
18	$^3/_4$	48	64	81	97	113	129	145	161	177	193
19	$^3/_4$	44	58	73	88	102	117	131	146	160	175
20	$^3/_4$	40	53	66	80	93	106	119	133	146	159
21	$^3/_4$	36	48	61	73	85	97	109	121	133	145
22	$^3/_4$	33	44	56	67	78	89	100	111	122	133
23	$^3/_4$	31	41	51	61	72	82	92	102	113	123
24	$^3/_4$	28	38	47	57	66	76	85	95	104	114
25	$^3/_4$	26	35	44	53	61	70	79	88	97	105
26	$^3/_4$	24	33	41	49	57	65	73	82	90	98
27	$^3/_4$	23	30	38	46	53	61	69	76	84	91
28	$^3/_4$	21	28	36	43	50	57	64	71	78	85
29	$^3/_4$	20	27	33	40	47	53	60	67	73	80
30	$^3/_4$	19	25	31	38	44	50	56	63	69	75
31	$^3/_4$	18	24	29	35	41	47	53	59	65	71
32	$^3/_4$	17	22	28	33	39	44	50	56	61	67
33	$^3/_4$	16	21	26	32	37	42	47	53	58	63
34	$^3/_4$	NP	20	25	30	35	40	45	50	55	60
35	$^3/_4$	NP	19	24	28	33	38	42	47	52	57
36	$^3/_4$	NP	18	22	27	31	36	40	45	49	54
37	$^3/_4$	NP	17	21	26	30	34	38	43	47	51
38	$^3/_4$	NP	16	20	24	28	32	36	40	45	49
39	$^3/_4$	NP	15	19	23	27	31	35	39	42	46
40	$^3/_4$	NP	NP	18	22	26	29	33	37	40	44

For SI: 1 inch = 25.4 mm, 1 foot = 304.8 mm, 1 pound per square inch = 6.895 kPa, 1 gallon per minute = 0.963 L/s.
NP—Not permitted.
a. Flow rate from Section P2904.4.2.

P2904.8.2 Final inspection. The following items shall be verified upon completion of the system:

1. Sprinkler are not painted, damaged or otherwise hindered from operation.
2. Where a pump is required to provide water to the system, the pump starts automatically upon system water demand.
3. Pressure-reducing valves, water softeners, water filters or other impairments to water flow that were not part of the original design have not been installed.
4. The sign or valve tag required by Section P2904.7 is installed and the owner's manual for the system is present.

TABLE P2904.6.2(5)
ALLOWABLE PIPE LENGTH FOR 1-INCH TYPE M COPPER WATER TUBING

SPRINKLER FLOW RATE[a] (gpm)	WATER DISTRIBUTION SIZE (inch)	AVAILABLE PRESSURE—P_t (psi)									
		15	20	25	30	35	40	45	50	55	60
		Allowable length of pipe from service valve to farthest sprinkler (feet)									
8	1	806	1075	1343	1612	1881	2149	2418	2687	2955	3224
9	1	648	864	1080	1296	1512	1728	1945	2161	2377	2593
10	1	533	711	889	1067	1245	1422	1600	1778	1956	2134
11	1	447	586	745	894	1043	1192	1341	1491	1640	1789
12	1	381	508	634	761	888	1015	1142	1269	1396	1523
13	1	328	438	547	657	766	875	985	1094	1204	1313
14	1	286	382	477	572	668	763	859	954	1049	1145
15	1	252	336	420	504	588	672	756	840	924	1008
16	1	224	298	373	447	522	596	671	745	820	894
17	1	200	266	333	400	466	533	600	666	733	799
18	1	180	240	300	360	420	479	539	599	659	719
19	1	163	217	271	325	380	434	488	542	597	651
20	1	148	197	247	296	345	395	444	493	543	592
21	1	135	180	225	270	315	360	406	451	496	541
22	1	124	165	207	248	289	331	372	413	455	496
23	1	114	152	190	228	267	305	343	381	419	457
24	1	106	141	176	211	246	282	317	352	387	422
25	1	98	131	163	196	228	261	294	326	359	392
26	1	91	121	152	182	212	243	273	304	334	364
27	1	85	113	142	170	198	226	255	283	311	340
28	1	79	106	132	159	185	212	238	265	291	318
29	1	74	99	124	149	174	198	223	248	273	298
30	1	70	93	116	140	163	186	210	233	256	280
31	1	66	88	110	132	153	175	197	219	241	263
32	1	62	83	103	124	145	165	186	207	227	248
33	1	59	78	98	117	137	156	176	195	215	234
34	1	55	74	92	111	129	148	166	185	203	222
35	1	53	70	88	105	123	140	158	175	193	210
36	1	50	66	83	100	116	133	150	166	183	199
37	1	47	63	79	95	111	126	142	158	174	190
38	1	45	60	75	90	105	120	135	150	165	181
39	1	43	57	72	86	100	115	129	143	158	172
40	1	41	55	68	82	96	109	123	137	150	164

For SI: 1 inch = 25.4 mm, 1 foot = 304.8 mm, 1 pound per square inch = 6.895 kPa, 1 gallon per minute = 0.963 L/s.

a. Flow rate from Section P2904.4.2.

TABLE P2904.6.2(6)
ALLOWABLE PIPE LENGTH FOR $^3/_4$-INCH CPVC PIPE

SPRINKLER FLOW RATE[a] (gpm)	WATER DISTRIBUTION SIZE (inch)	AVAILABLE PRESSURE—P_t (psi)									
		15	20	25	30	35	40	45	50	55	60
		Allowable length of pipe from service valve to farthest sprinkler (feet)									
8	$^3/_4$	348	465	581	697	813	929	1045	1161	1278	1394
9	$^3/_4$	280	374	467	560	654	747	841	934	1027	1121
10	$^3/_4$	231	307	384	461	538	615	692	769	845	922
11	$^3/_4$	193	258	322	387	451	515	580	644	709	773
12	$^3/_4$	165	219	274	329	384	439	494	549	603	658
13	$^3/_4$	142	189	237	284	331	378	426	473	520	568
14	$^3/_4$	124	165	206	247	289	330	371	412	454	495
15	$^3/_4$	109	145	182	218	254	290	327	363	399	436
16	$^3/_4$	97	129	161	193	226	258	290	322	354	387
17	$^3/_4$	86	115	144	173	202	230	259	288	317	346
18	$^3/_4$	78	104	130	155	181	207	233	259	285	311
19	$^3/_4$	70	94	117	141	164	188	211	234	258	281
20	$^3/_4$	64	85	107	128	149	171	192	213	235	256
21	$^3/_4$	58	78	97	117	136	156	175	195	214	234
22	$^3/_4$	54	71	89	107	125	143	161	179	197	214
23	$^3/_4$	49	66	82	99	115	132	148	165	181	198
24	$^3/_4$	46	61	76	91	107	122	137	152	167	183
25	$^3/_4$	42	56	71	85	99	113	127	141	155	169
26	$^3/_4$	39	52	66	79	92	105	118	131	144	157
27	$^3/_4$	37	49	61	73	86	98	110	122	135	147
28	$^3/_4$	34	46	57	69	80	92	103	114	126	137
29	$^3/_4$	32	43	54	64	75	86	96	107	118	129
30	$^3/_4$	30	40	50	60	70	81	91	101	111	121
31	$^3/_4$	28	38	47	57	66	76	85	95	104	114
32	$^3/_4$	27	36	45	54	63	71	80	89	98	107
33	$^3/_4$	25	34	42	51	59	68	76	84	93	101
34	$^3/_4$	24	32	40	48	56	64	72	80	88	96
35	$^3/_4$	23	30	38	45	53	61	68	76	83	91
36	$^3/_4$	22	29	36	43	50	57	65	72	79	86
37	$^3/_4$	20	27	34	41	48	55	61	68	75	82
38	$^3/_4$	20	26	33	39	46	52	59	65	72	78
39	$^3/_4$	19	25	31	37	43	50	56	62	68	74
40	$^3/_4$	18	24	30	35	41	47	53	59	65	71

For SI: 1 inch = 25.4 mm, 1 foot = 304.8 mm, 1 pound per square inch = 6.895 kPa, 1 gallon per minute = 0.963 L/s.
a. Flow rate from Section P2904.4.2.

TABLE P2904.6.2(7)
ALLOWABLE PIPE LENGTH FOR 1-INCH CPVC PIPE

SPRINKLER FLOW RATE[a] (gpm)	WATER DISTRIBUTION SIZE (inch)	AVAILABLE PRESSURE—P_t (psi)									
		15	20	25	30	35	40	45	50	55	60
		Allowable length of pipe from service valve to farthest sprinkler (feet)									
8	1	1049	1398	1748	2098	2447	2797	3146	3496	3845	4195
9	1	843	1125	1406	1687	1968	2249	2530	2811	3093	3374
10	1	694	925	1157	1388	1619	1851	2082	2314	2545	2776
11	1	582	776	970	1164	1358	1552	1746	1940	2133	2327
12	1	495	660	826	991	1156	1321	1486	1651	1816	1981
13	1	427	570	712	854	997	1139	1281	1424	1566	1709
14	1	372	497	621	745	869	993	1117	1241	1366	1490
15	1	328	437	546	656	765	874	983	1093	1202	1311
16	1	291	388	485	582	679	776	873	970	1067	1164
17	1	260	347	433	520	607	693	780	867	954	1040
18	1	234	312	390	468	546	624	702	780	858	936
19	1	212	282	353	423	494	565	635	706	776	847
20	1	193	257	321	385	449	513	578	642	706	770
21	1	176	235	293	352	410	469	528	586	645	704
22	1	161	215	269	323	377	430	484	538	592	646
23	1	149	198	248	297	347	396	446	496	545	595
24	1	137	183	229	275	321	366	412	458	504	550
25	1	127	170	212	255	297	340	382	425	467	510
26	1	118	158	197	237	276	316	355	395	434	474
27	1	111	147	184	221	258	295	332	368	405	442
28	1	103	138	172	207	241	275	310	344	379	413
29	1	97	129	161	194	226	258	290	323	355	387
30	1	91	121	152	182	212	242	273	303	333	364
31	1	86	114	143	171	200	228	257	285	314	342
32	1	81	108	134	161	188	215	242	269	296	323
33	1	76	102	127	152	178	203	229	254	280	305
34	1	72	96	120	144	168	192	216	240	265	289
35	1	68	91	114	137	160	182	205	228	251	273
36	1	65	87	108	130	151	173	195	216	238	260
37	1	62	82	103	123	144	165	185	206	226	247
38	1	59	78	98	117	137	157	176	196	215	235
39	1	56	75	93	112	131	149	168	187	205	224
40	1	53	71	89	107	125	142	160	178	196	214

For SI: 1 inch = 25.4 mm, 1 foot = 304.8 mm, 1 pound per square inch = 6.895 kPa, 1 gallon per minute = 0.963 L/s.

a. Flow rate from Section P2904.4.2.

TABLE P2904.6.2(8)
ALLOWABLE PIPE LENGTH FOR $^3/_4$-INCH PEX AND PE-RT TUBING

SPRINKLER FLOW RATE[a] (gpm)	WATER DISTRIBUTION SIZE (inch)	AVAILABLE PRESSURE—P_t (psi)									
		15	20	25	30	35	40	45	50	55	60
		Allowable length of pipe from service valve to farthest sprinkler (feet)									
8	$^3/_4$	93	123	154	185	216	247	278	309	339	370
9	$^3/_4$	74	99	124	149	174	199	223	248	273	298
10	$^3/_4$	61	82	102	123	143	163	184	204	225	245
11	$^3/_4$	51	68	86	103	120	137	154	171	188	205
12	$^3/_4$	44	58	73	87	102	117	131	146	160	175
13	$^3/_4$	38	50	63	75	88	101	113	126	138	151
14	$^3/_4$	33	44	55	66	77	88	99	110	121	132
15	$^3/_4$	29	39	48	58	68	77	87	96	106	116
16	$^3/_4$	26	34	43	51	60	68	77	86	94	103
17	$^3/_4$	23	31	38	46	54	61	69	77	84	92
18	$^3/_4$	21	28	34	41	48	55	62	69	76	83
19	$^3/_4$	19	25	31	37	44	50	56	62	69	75
20	$^3/_4$	17	23	28	34	40	45	51	57	62	68
21	$^3/_4$	16	21	26	31	36	41	47	52	57	62
22	$^3/_4$	NP	19	24	28	33	38	43	47	52	57
23	$^3/_4$	NP	17	22	26	31	35	39	44	48	52
24	$^3/_4$	NP	16	20	24	28	32	36	40	44	49
25	$^3/_4$	NP	NP	19	22	26	30	34	37	41	45
26	$^3/_4$	NP	NP	17	21	24	28	31	35	38	42
27	$^3/_4$	NP	NP	16	20	23	26	29	33	36	39
28	$^3/_4$	NP	NP	15	18	21	24	27	30	33	36
29	$^3/_4$	NP	NP	NP	17	20	23	26	28	31	34
30	$^3/_4$	NP	NP	NP	16	19	21	24	27	29	32
31	$^3/_4$	NP	NP	NP	15	18	20	23	25	28	30
32	$^3/_4$	NP	NP	NP	NP	17	19	21	24	26	28
33	$^3/_4$	NP	NP	NP	NP	16	18	20	22	25	27
34	$^3/_4$	NP	NP	NP	NP	NP	17	19	21	23	25
35	$^3/_4$	NP	NP	NP	NP	NP	16	18	20	22	24
36	$^3/_4$	NP	NP	NP	NP	NP	15	17	19	21	23
37	$^3/_4$	NP	NP	NP	NP	NP	NP	16	18	20	22
38	$^3/_4$	NP	NP	NP	NP	NP	NP	16	17	19	21
39	$^3/_4$	NP	NP	NP	NP	NP	NP	NP	16	18	20
40	$^3/_4$	NP	NP	NP	NP	NP	NP	NP	16	17	19

For SI: 1 inch = 25.4 mm, 1 foot = 304.8 mm, 1 pound per square inch = 6.895 kPa, 1 gallon per minute = 0.963 L/s.
NP—Not permitted.
a. Flow rate from Section P2904.4.2.

TABLE P2904.6.2(9)
ALLOWABLE PIPE LENGTH FOR 1-INCH PEX AND PE-RT TUBING

SPRINKLER FLOW RATE[a] (gpm)	WATER DISTRIBUTION SIZE (inch)	AVAILABLE PRESSURE—P_t (psi)									
		15	20	25	30	35	40	45	50	55	60
		Allowable length of pipe from service valve to farthest sprinkler (feet)									
8	1	314	418	523	628	732	837	941	1046	1151	1255
9	1	252	336	421	505	589	673	757	841	925	1009
10	1	208	277	346	415	485	554	623	692	761	831
11	1	174	232	290	348	406	464	522	580	638	696
12	1	148	198	247	296	346	395	445	494	543	593
13	1	128	170	213	256	298	341	383	426	469	511
14	1	111	149	186	223	260	297	334	371	409	446
15	1	98	131	163	196	229	262	294	327	360	392
16	1	87	116	145	174	203	232	261	290	319	348
17	1	78	104	130	156	182	208	233	259	285	311
18	1	70	93	117	140	163	187	210	233	257	280
19	1	63	84	106	127	148	169	190	211	232	253
20	1	58	77	96	115	134	154	173	192	211	230
21	1	53	70	88	105	123	140	158	175	193	211
22	1	48	64	80	97	113	129	145	161	177	193
23	1	44	59	74	89	104	119	133	148	163	178
24	1	41	55	69	82	96	110	123	137	151	164
25	1	38	51	64	76	89	102	114	127	140	152
26	1	35	47	59	71	83	95	106	118	130	142
27	1	33	44	55	66	77	88	99	110	121	132
28	1	31	41	52	62	72	82	93	103	113	124
29	1	29	39	48	58	68	77	87	97	106	116
30	1	27	36	45	54	63	73	82	91	100	109
31	1	26	34	43	51	60	68	77	85	94	102
32	1	24	32	40	48	56	64	72	80	89	97
33	1	23	30	38	46	53	61	68	76	84	91
34	1	22	29	36	43	50	58	65	72	79	86
35	1	20	27	34	41	48	55	61	68	75	82
36	1	19	26	32	39	45	52	58	65	71	78
37	1	18	25	31	37	43	49	55	62	68	74
38	1	18	23	29	35	41	47	53	59	64	70
39	1	17	22	28	33	39	45	50	56	61	67
40	1	16	21	27	32	37	43	48	53	59	64

For SI: 1 inch = 25.4 mm, 1 foot = 304.8 mm, 1 pound per square inch = 6.895 kPa, 1 gallon per minute = 0.963 L/s.
a. Flow rate from Section P2904.4.2.

SECTION P2905
HEATED WATER DISTRIBUTION SYSTEMS

P2905.1 Heated water circulation systems and heat trace systems. Circulation systems and heat trace systems that are installed to bring heated water in close proximity to one or more fixtures shall meet the requirements of Section N1103.5.1.

P2905.2 Demand recirculation systems. Demand recirculation water systems shall be in accordance with Section N1103.5.2.

SECTION P2906
MATERIALS, JOINTS AND CONNECTIONS

P2906.1 Soil and groundwater. The installation of water service pipe, water distribution pipe, fittings, valves, appurtenances and gaskets shall be prohibited in soil and groundwater that is contaminated with solvents, fuels, organic compounds or other detrimental materials that cause permeation, corrosion, degradation or structural failure of the water service or water distribution piping material.

P2906.1.1 Investigation required. Where detrimental conditions are suspected by or brought to the attention of the *building official*, a chemical analysis of the soil and groundwater conditions shall be required to ascertain the acceptability of the water service material for the specific installation.

P2906.1.2 Detrimental condition. Where a detrimental condition exists, *approved* alternate materials or alternate routing shall be required.

P2906.2 Lead content. The lead content in pipe and fittings used in the water supply system shall be not greater than 8 percent.

P2906.2.1 Lead content of drinking water pipe and fittings. Pipe, pipe fittings, joints, valves, faucets and fixture fittings utilized to supply water for drinking or cooking purposes shall comply with NSF 372 and shall have a weighted average lead content of 0.25 percent lead or less.

P2906.3 Polyethylene plastic piping installation. Polyethylene pipe shall be cut square using a cutter designed for plastic pipe. Except where joined by heat fusion, pipe ends shall be chamfered to remove sharp edges. Pipe that has been kinked shall not be installed. For bends, the installed radius of pipe curvature shall be greater than 30 pipe diameters or the coil radius where bending with the coil. Coiled pipe shall not be bent beyond straight. Bends within 10 pipe diameters of any fitting or valve shall be prohibited. Joints between polyethylene plastic pipe and fittings shall comply with Section P2906.3.1 or P2906.3.2.

P2906.3.1 Heat-fusion joints. Joint surfaces shall be clean and free from moisture. Joint surfaces shall be heated to melting temperature and joined. The joint shall be undisturbed until cool. Joints shall be made in accordance with ASTM D 2657.

P2906.3.2 Mechanical joints. Mechanical joints shall be installed in accordance with the manufacturer's instructions.

P2906.4 Water service pipe. Water service pipe shall conform to NSF 61 and shall conform to one of the standards indicated in Table P2906.4. Water service pipe or tubing, installed underground and outside of the structure, shall have a working pressure rating of not less than 160 pounds per square inch at 73°F (1103 kPa at 23°C). Where the water pressure exceeds 160 pounds per square inch (1103 kPa), piping material shall have a rated working pressure equal to or greater than the highest available pressure. Water service piping materials not third-party certified for water distribution shall terminate at or before the full open valve located at the entrance to the structure. Ductile iron water service piping shall be cement mortar lined in accordance with AWWA C104/A21.4.

P2906.4.1 Separation of water service and building sewer. Trenching, pipe installation and backfilling shall be in accordance with Section P2604. Where water service piping is located in the same trench with the building sewer, such sewer shall be constructed of materials listed in Table P3002.1(2). Where the building sewer piping is not constructed of materials indicated in Table P3002.1(2), the water service pipe and the building sewer shall be horizontally separated by not less than 5 feet (1524 mm) of undisturbed or compacted earth. The required separation distance shall not apply where a water service pipe crosses a sewer pipe, provided the water service is sleeved to a point not less than 5 feet (1524 mm) horizontally from the sewer pipe centerline on both sides of such crossing. The sleeve shall be of pipe materials indicated in Table P2906.4, P3002.1(2) or P3002.2. The required separation distance shall not apply where the bottom of the water service pipe that is located within 5 feet (1524 mm) of the sewer is not less than 12 inches (305 mm) above the highest point of the top of the building sewer. *

P2906.5 Water-distribution pipe. Water-distribution piping within *dwelling units* shall conform to NSF 61 and shall conform to one of the standards indicated in Table P2906.5. Hot-water-distribution pipe and tubing shall have a pressure rating of not less than 100 psi at 180°F (689 kPa at 82°C).

P2906.6 Fittings. Pipe fittings shall be *approved* for installation with the piping material installed and shall comply with the applicable standards indicated in Table P2906.6. Pipe fittings used in water supply systems shall comply with NSF 61.

P2906.7 Flexible water connectors. Flexible water connectors, exposed to continuous pressure, shall conform to ASME A112.18.6/CSA B125.6. Access shall be provided to flexible water connectors.

P2906.8 Joint and connection tightness. Joints and connections in the plumbing system shall be gas tight and water tight for the intended use or required test pressure.

P2906.9 Plastic pipe joints. Joints in plastic piping shall be made with *approved* fittings by solvent cementing, heat fusion, corrosion-resistant metal clamps with insert fittings or compression connections. Flared joints for polyethylene pipe shall be permitted in accordance with Section P2906.3.

P2906.9.1 Solvent cementing. Solvent-cemented joints shall comply with Sections P2906.9.1.1 through P2906.9.1.3.

TABLE P2906.4
WATER SERVICE PIPE

MATERIAL	STANDARD
Acrylonitrile butadiene styrene (ABS) plastic pipe	ASTM D 1527; ASTM D 2282
Chlorinated polyvinyl chloride (CPVC) plastic pipe	ASTM D 2846; ASTM F 441; ASTM F 442; CSA B137.6
Chlorinated polyvinyl chloride/aluminum/chlorinated polyvinyl chloride (CPVC/AL/CPVC) plastic pipe	ASTM F 2855
Copper or copper-alloy pipe	ASTM B 42; ASTM B 43; ASTM B 302
Copper or copper-alloy tubing (Type K, WK, L, WL, M or WM)	ASTM B 75; ASTM B 88; ASTM B 251; ASTM B 447
Cross-linked polyethylene/aluminum/cross-linked polyethylene (PEX-AL-PEX) pipe	ASTM F 1281; ASTM F 2262; CSA B137.10
Cross-linked polyethylene/aluminum/high-density polyethylene (PEX-AL-HDPE) pipe	ASTM F 1986
Cross-linked polyethylene (PEX) plastic tubing	ASTM F 876; ASTM F 877; CSA B137.5
Ductile iron water pipe	AWWA C115/A21.15; AWWA C151/A21.51
Galvanized steel pipe	ASTM A 53
Polyethylene/aluminum/polyethylene (PE-AL-PE) pipe	ASTM F 1282; CSA B137.9
Polyethylene (PE) plastic pipe	ASTM D 2104; ASTM D 2239; AWWA C901; CSA B137.1
Polyethylene (PE) plastic tubing	ASTM D 2737; AWWA C901; CSA B137.1
Polyethylene of raised temperature (PE-RT) plastic tubing	ASTM F 2769
Polypropylene (PP) plastic tubing	ASTM F 2389; CSA B137.11
Polyvinyl chloride (PVC) plastic pipe	ASTM D 1785; ASTM D 2241; ASTM D 2672; CSA B137.3
Stainless steel (Type 304/304L) pipe	ASTM A 312; ASTM A 778
Stainless steel (Type 316/316L) pipe	ASTM A 312; ASTM A 778

P2906.9.1.1 ABS plastic pipe. Solvent cement for ABS plastic pipe conforming to ASTM D 2235 shall be applied to all joint surfaces.

P2906.9.1.2 CPVC plastic pipe. Joint surfaces shall be clean and free from moisture. Joints shall be made in accordance with the pipe, fitting or solvent cement manufacturer's installation instructions. Where such instructions require a primer to be used, an *approved* primer shall be applied, and a solvent cement, orange in color and conforming to ASTM F 493, shall be applied to joint surfaces. Where such instructions allow for a one-step solvent cement, yellow or red in color and conforming to ASTM F 493, to be used, the joint surfaces shall not require application of a primer before the solvent cement is applied. The joint shall be made while the cement is wet, and in accordance with ASTM D 2846 or ASTM F 493. Solvent cement joints shall be permitted above or below ground.

P2906.9.1.3 CPVC/AL/CPVC pipe. Joint surfaces shall be clean and free from moisture, and an *approved* primer shall be applied. Solvent cement, orange in color and conforming to ASTM F493, shall be applied to all joint surfaces. The joint shall be made while the cement is wet, and in accordance with ASTM D2846 or ASTM F493. Solvent-cement joints shall be installed above or below ground.

Exception: A primer shall not be required where all of the following conditions apply:

1. The solvent cement used is third-party certified as conforming to ASTM F493.
2. The solvent cement used is yellow in color.
3. The solvent cement is used only for joining $^1/_2$-inch (12.7 mm) through 1-inch (25.4 mm) diameter CPVC/AL/CPVC pipe and CPVC fittings.
4. The CPVC fittings are manufactured in accordance with ASTM D 2846.

P2906.9.1.4 PVC plastic pipe. A purple primer that conforms to ASTM F 656 shall be applied to PVC solvent-cemented joints. Solvent cement for PVC plastic pipe conforming to ASTM D 2564 shall be applied to all joint surfaces.

P2906.9.1.5 Cross-linked polyethylene plastic (PEX). Joints between cross-linked polyethylene plastic tubing or fittings shall comply with Section P2906.9.1.5.1 or Section P2906.9.1.5.2.

P2906.9.1.5.1 Flared joints. Flared pipe ends shall be made by a tool designed for that operation.

P2906.9.1.5.2 Mechanical joints. Mechanical joints shall be installed in accordance with the manufacturer's instructions. Fittings for cross-linked polyethylene (PEX) plastic tubing shall comply with the applicable standards indicated in Table P2906.6 and shall be installed in accordance with the manufacturer's instructions. PEX tubing shall be factory marked with the applicable standards for the fittings that the PEX manufacturer specifies for use with the tubing.

TABLE P2906.5
WATER DISTRIBUTION PIPE

MATERIAL	STANDARD
Chlorinated polyvinyl chloride (CPVC) plastic pipe and tubing	ASTM D 2846; ASTM F 441; ASTM F 442; CSA B137.6
Chlorinated polyvinyl chloride/aluminum/chlorinated polyvinyl chloride (CPVC/AL/CPVC) plastic pipe	ASTM F 2855
Copper or copper-alloy pipe	ASTM B 42; ASTM B 43; ASTM B 302
Copper or copper-alloy tubing (Type K, WK, L, WL, M or WM)	ASTM B 75; ASTM B 88; ASTM B 251; ASTM B 447
Cross-linked polyethylene (PEX) plastic tubing	ASTM F 876; ASTM F 877; CSA B137.5
Cross-linked polyethylene/aluminum/cross-linked polyethylene (PEX-AL-PEX) pipe	ASTM F 1281; ASTM F 2262; CSA B137.10
Cross-linked polyethylene/aluminum/high-density polyethylene (PEX-AL-HDPE) pipe	ASTM F 1986
Galvanized steel pipe	ASTM A 53
Polyethylene/aluminum/polyethylene (PE-AL-PE) composite pipe	ASTM F 1282
Polyethylene of raised temperature (PE-RT) plastic tubing	ASTM F 2769
Polypropylene (PP) plastic pipe or tubing	ASTM F 2389; CSA B137.11
Stainless steel (Type 304/304L) pipe	ASTM A 312; ASTM A 778

TABLE P2906.6
PIPE FITTINGS

MATERIAL	STANDARD
Acrylonitrile butadiene styrene (ABS) plastic	ASTM D 2468
Cast-iron	ASME B16.4
Chlorinated polyvinyl chloride (CPVC) plastic	ASSE 1061; ASTM D 2846; ASTM F 437; ASTM F 438; ASTM F 439; CSA B137.6
Copper or copper alloy	ASSE 1061; ASME B16.15; ASME B16.18; ASME B16.22; ASME B16.26; ASME B16.51
Cross-linked polyethylene/aluminum/high-density polyethylene (PEX-AL-HDPE)	ASTM F 1986
Fittings for cross-linked polyethylene (PEX) plastic tubing	ASSE 1061; ASTM F 877; ASTM F 1807; ASTM F 1960; ASTM F 2080; ASTM F 2098; ASTM F 2159; ASTM F 2434; ASTM F 2735; CSA B137.5
Gray iron and ductile iron	AWWA C110/A21.10; AWWA C153/A21.53
Malleable iron	ASME B16.3
Insert fittings for Polyethylene/aluminum/polyethylene (PE-AL-PE) and cross-linked polyethylene/aluminum/cross-linked polyethylene (PEX-AL-PEX)	ASTM F 1974; ASTM F 1281; ASTM F 1282; CSA B137.9; CSA B137.10
Polyethylene (PE) plastic	ASTM D 2609; CSA B137.1
Fittings for polyethylene of raised temperature (PE-RT) plastic tubing	ASTM F 1807; ASTM F2098; ASTM F 2159; ASTM F 2735; ASTM F 2769
Polypropylene (PP) plastic pipe or tubing	ASTM F 2389; CSA B137.11
Polyvinyl chloride (PVC) plastic	ASTM D 2464; ASTM D 2466; ASTM D 2467; CSA B137.2; CSA B137.3
Stainless steel (Type 304/304L) pipe	ASTM A 312; ASTM A 778
Stainless steel (Type 316/316L) pipe	ASTM A 312; ASTM A 778
Steel	ASME B16.9; ASME B16.11; ASME B16.28

P2906.10 Polypropylene (PP) plastic. Joints between polypropylene plastic pipe and fittings shall comply with Section P2906.10.1 or P2906.10.2.

P2906.10.1 Heat-fusion joints. Heat fusion joints for polypropylene pipe and tubing joints shall be installed with socket-type heat-fused polypropylene fittings, butt-fusion polypropylene fittings or electrofusion polypropylene fittings. Joint surfaces shall be clean and free from moisture. The joint shall be undisturbed until cool. Joints shall be made in accordance with ASTM F 2389.

P2906.10.2 Mechanical and compression sleeve joints. Mechanical and compression sleeve joints shall be installed in accordance with the manufacturer's instructions.

P2906.11 Cross-linked polyethylene/aluminum/cross-linked polyethylene. Joints between polyethylene/aluminum/polyethylene (PE-AL-PE) and cross-linked polyethylene/aluminum/cross-linked polyethylene (PEX-AL-PEX) pipe and fittings shall comply with Section P2906.11.1.

P2906.11.1 Mechanical joints. Mechanical joints shall be installed in accordance with the manufacturer's instructions. Fittings for PE-AL-PE and PEX-AL-PEX as described in ASTM F 1974, ASTM F 1281, ASTM F 1282, CSA B137.9 and CSA B137.10 shall be installed in accordance with the manufacturer's instructions.

P2906.12 Stainless steel. Joints between stainless steel pipe and fittings shall comply with Section P2906.12.1 or P2906.12.2.

P2906.12.1 Mechanical joints. Mechanical joints shall be installed in accordance with the manufacturer's instructions.

P2906.12.2 Welded joints. Joint surfaces shall be cleaned. The joint shall be welded autogenously or with an *approved* filler metal in accordance with ASTM A 312.

P2906.13 Threaded pipe joints. Threaded joints shall conform to American National Taper Pipe Thread specifications. Pipe ends shall be deburred and chips removed. Pipe joint compound shall be used only on male threads.

P2906.14 Soldered and brazed joints. Soldered joints in copper and copper alloy tubing shall be made with fittings approved for water piping and shall conform to ASTM B 828. Surfaces to be soldered shall be cleaned bright. Fluxes for soldering shall be in accordance with ASTM B813. Brazing fluxes shall be in accordance with AWS A5.31M/A5.31. Solders and fluxes used in potable water-supply systems shall have a lead content of not greater than 0.2 percent.

P2906.15 Flared joints. Flared joints in water tubing shall be made with *approved* fittings. The tubing shall be reamed and then expanded with a flaring tool.

P2906.16 Above-ground joints. Joints within the building between copper pipe or CPVC tubing, in any combination with compatible outside diameters, shall be permitted to be made with the use of *approved* push-in mechanical fittings of a pressure-lock design.

P2906.17 Joints between different materials. Joints between different piping materials shall be made in accordance with Section P2906.17.1, P2906.17.2 or P2906.17.3, or with a mechanical joint of the compression or mechanical sealing type having an elastomeric seal conforming to ASTM D 1869 or ASTM F 477. Joints shall be installed in accordance with the manufacturer's instructions.

P2906.17.1 Copper or copper-alloy tubing to galvanized steel pipe. Joints between copper or copper-alloy tubing and galvanized steel pipe shall be made with a copper alloy fitting or dielectric fitting. The copper tubing shall be joined to the fitting in an *approved* manner, and the fitting shall be screwed to the threaded pipe.

P2906.17.2 Plastic pipe or tubing to other piping material. Joints between different types of plastic pipe or between plastic pipe and other piping material shall be made with an *approved* adapter fitting.

P2906.17.3 Stainless steel. Joints between stainless steel and different piping materials shall be made with a mechanical joint of the compression or mechanical-sealing type or a dielectric fitting.

P2906.18 Press-connect joints. Press-connect joints shall conform to one of the standards indicated in Table P2906.6. Press-type mechanical joints in copper tubing shall be made in accordance with the manufacturer's instructions. Cut tube ends shall be reamed to the full inside diameter of the tube end. Joint surfaces shall be cleaned. The tube shall be fully inserted into the press connect fitting. Press-connect joints shall be pressed with a tool certified by the manufacturer.

P2906.19 Polyethylene of raised temperature plastic. Joints between polyethylene of raised temperature plastic tubing and fittings shall be in accordance with Section P2906.19.1.

P2906.19.1 Mechanical joints. Mechanical joints shall be installed in accordance with the manufacturer's instructions. Fittings for polyethylene of raised temperature plastic tubing shall comply with the applicable standards listed in Table P2906.6 and shall be installed in accordance with the manufacturer's instructions. Polyethylene of raised temperature plastic tubing shall be factory marked with the applicable standards for the fittings that the manufacturer of the tubing specifies for use with the tubing.

SECTION P2907
CHANGES IN DIRECTION

P2907.1 Bends. Changes in direction in copper tubing shall be permitted to be made with bends having a radius of not less than four diameters of the tube, provided that such bends are made by use of forming equipment that does not deform or create loss in cross-sectional area of the tube.

SECTION P2908
SUPPORT

P2908.1 General. Pipe and tubing support shall conform to Section P2605.

SECTION P2909
DRINKING WATER TREATMENT UNITS

P2909.1 Design. Drinking water treatment units shall meet the requirements of NSF42, NSF 44, NSF 53, NSF 60 or CSA B483.1.

P2909.2 Reverse osmosis drinking water treatment units. Point-of-use reverse osmosis drinking water treatment units, designed for residential use, shall meet the requirements of NSF 58 or CSA B483.1. Waste or discharge from reverse osmosis drinking water treatment units shall enter the drainage system through an *air gap* or an *air gap* device that meets the requirements of NSF 58.

P2909.3 Connection tubing. The tubing to and from drinking water treatment units shall be of a size and material as recommended by the manufacturer. The tubing shall comply with NSF 14, NSF 42, NSF 44, NSF 53, NSF 58 or NSF 61.

SECTION P2910
NONPOTABLE WATER SYSTEMS

P2910.1 Scope. The provisions of this section shall govern the materials, design, construction and installation of systems for the collection, storage, treatment and distribution of nonpotable water. The use and application of nonpotable water shall comply with laws, rules and ordinances applicable in the jurisdiction.

P2910.2 Water quality. Nonpotable water for each end use application shall meet the minimum water quality requirements as established for the intended application by the laws, rules and ordinances applicable in the jurisdiction. Where nonpotable water from different sources is combined in a system, the system shall comply with the most stringent requirements of this code applicable to such sources.

P2910.2.1 Residual disinfectants. Where chlorine is used for disinfection, the nonpotable water shall contain not more than 4 ppm (4 mg/L) of chloramines or free chlorine. Where ozone is used for disinfection, the nonpotable water shall not contain gas bubbles having elevated levels of ozone at the point of use.

Exception: Reclaimed water sources shall not be required to comply with the requirements of this section.

P2910.2.2 Filtration required. Nonpotable water utilized for water closet and urinal flushing applications shall be filtered by a 100 micron or finer filter.

Exception: Reclaimed water sources shall not be required to comply with the requirements of this section.

P2910.3 Signage required. Nonpotable water outlets such as hose connections, open-ended pipes and faucets shall be identified at the point of use for each outlet with signage that reads as follows: "Nonpotable water is utilized for [application name]. CAUTION: NONPOTABLE WATER. DO NOT DRINK." The words shall be legibly and indelibly printed on a tag or sign constructed of corrosion-resistant, waterproof material or shall be indelibly printed on the fixture. The letters of the words shall be not less than 0.5 inches (12.7 mm) in height and in colors contrasting the background on which they are applied. In addition to the required wordage, the pictograph shown in Figure P2910.3 shall appear on the signage required by this section.

FIGURE P2910.3
PICTOGRAPH—DO NOT DRINK

P2910.4 Permits. Permits shall be required for the construction, installation, alteration and repair of nonpotable water systems. Construction documents, engineering calculations, diagrams and other such data pertaining to the nonpotable water system shall be submitted with each permit application.

P2910.5 Potable water connections. Where a potable system is connected to a nonpotable water system, the potable water supply shall be protected against backflow in accordance with Section P2902.

P2910.6 Approved components and materials. Piping, plumbing components and materials used in collection and conveyance systems shall be manufactured of material approved for the intended application and compatible with any disinfection and treatment systems used.

P2910.7 Insect and vermin control. The system shall be protected to prevent the entrance of insects and vermin into storage tanks and piping systems. Screen materials shall be compatible with contacting system components and shall not accelerate the corrosion of system components.

P2910.8 Freeze protection. Where sustained freezing temperatures occur, provisions shall be made to keep storage tanks and the related piping from freezing.

P2909.9 Nonpotable water storage tanks. Nonpotable water storage tanks shall comply with Sections P2910.9.1 through P2910.9.11.

P2910.9.1 Sizing. The holding capacity of the storage tank shall be sized in accordance with the anticipated demand.

P2910.9.2 Location. Storage tanks shall be installed above or below grade. Above-grade storage tanks shall be protected from direct sunlight and shall be constructed using opaque, UV-resistant materials such as, but not limited to, heavily tinted plastic, lined metal, concrete and wood; or painted to prevent algae growth; or shall have

specially constructed sun barriers including, but not limited to, installation in garages, crawlspaces or sheds. Storage tanks and their manholes shall not be located directly under any soil piping, waste piping or any source of contamination.

P2910.9.3 Materials. Where collected on site, water shall be collected in an *approved* tank constructed of durable, nonabsorbent and corrosion-resistant materials. The storage tank shall be constructed of materials compatible with any disinfection systems used to treat water upstream of the tank and with any systems used to maintain water quality within the tank. Wooden storage tanks that are not equipped with a makeup water source shall be provided with a flexible liner.

P2910.9.4 Foundation and supports. Storage tanks shall be supported on a firm base capable of withstanding the weight of the storage tank when filled to capacity. Storage tanks shall be supported in accordance with this code.

P2910.9.4.1 Ballast. Where the soil can become saturated, an underground storage tank shall be ballasted or otherwise secured to prevent the tank from floating out of the ground when empty. The combined weight of the tank and hold-down ballast shall meet or exceed the buoyancy force of the tank. Where the installation requires a foundation, the foundation shall be flat and shall be designed to support the storage tank weight when full, consistent with the bearing capability of adjacent soil.

P2910.9.4.2 Structural support. Where installed below grade, storage tank installations shall be designed to withstand earth and surface structural loads without damage and with minimal deformation when empty or filled with water.

P2910.9.5 Makeup water. Where an uninterrupted nonpotable water supply is required for the intended application, potable or reclaimed water shall be provided as a source of makeup water for the storage tank. The makeup water supply shall be protected against backflow by means of an *air gap* not less than 4 inches (102 mm) above the overflow or an *approved* backflow device in accordance with Section P2902. A full-open valve located on the makeup water supply line to the storage tank shall be provided. Inlets to the storage tank shall be controlled by fill valves or other automatic supply valves installed to prevent the tank from overflowing and to prevent the water level from dropping below a predetermined point. Where makeup water is provided, the water level shall be prohibited from dropping below the source water inlet or the intake of any attached pump.

P2910.9.5.1 Inlet control valve alarm. Makeup water systems shall be fitted with a warning mechanism that alerts the user to a failure of the inlet control valve to close correctly. The alarm shall activate before the water within the storage tank begins to discharge into the overflow system.

P2910.9.6 Overflow. The storage tank shall be equipped with an overflow pipe having a diameter not less than that shown in Table P2910.9.6. The overflow outlet shall discharge at a point not less than 6 inches (152 mm) above the roof or roof drain; floor or floor drain; or over an open water-supplied fixture. The overflow outlet shall be covered with a corrosion-resistant screen of not less than 16 by 20 mesh per inch (630 by 787 mesh per m) and by $^1/_4$-inch (6.4 mm) hardware cloth or shall terminate in a horizontal angle seat check valve. Drainage from overflow pipes shall be directed to prevent freezing on roof walks. The overflow drain shall not be equipped with a shutoff valve. Not less than one cleanout shall be provided on each overflow pipe in accordance with Section P3005.2.

P2910.9.7 Access. Not less than one access opening shall be provided to allow inspection and cleaning of the tank interior. Access openings shall have an *approved* locking device or other *approved* method of securing access. Below-grade storage tanks, located outside of the building, shall be provided with a manhole either not less than 24 inches (610 mm) square or with an inside diameter not less than 24 inches (610 mm). Manholes shall extend not less than 4 inches (102 mm) above ground or shall be designed to prevent water infiltration. Finished grade shall be sloped away from the manhole to divert surface water. Manhole covers shall be secured to prevent unauthorized access. Service ports in manhole covers shall be not less than 8 inches (203 mm) in diameter and shall be not less than 4 inches (102 mm) above the finished grade level. The service port shall be secured to prevent unauthorized access.

Exception: Storage tanks under 800 gallons (3028 L) in volume installed below grade shall not be required to be equipped with a manhole, but shall have a service port not less than 8 inches (203 mm) in diameter.

TABLE P2910.9.6
SIZE OF DRAIN PIPES FOR WATER TANKS

TANK CAPACITY (gallons)	DRAIN PIPE (inches)
Up to 750	1
751 to 1500	$1^1/_2$
1501 to 3000	2
3001 to 5000	$2^1/_2$
5001 to 7500	3
Over 7500	4

For SI: 1 gallon = 3.875 liters, 1 inch = 25.4 mm.

P2910.9.8 Venting. Storage tanks shall be provided with a vent sized in accordance with Chapter 31 and based on the aggregate diameter of all tank influent pipes. The reservoir vent shall not be connected to sanitary drainage system vents. Vents shall be protected from contamination by means of an *approved* cap or a U-bend installed with the opening directed downward. Vent outlets shall extend not less than 4 inches (102 mm) above grade, or as necessary to prevent surface water from entering the storage tank. Vent openings shall be protected against the entrance of vermin and insects in accordance with the requirements of Section P2902.7.

P2910.9.9 Drain. A drain shall be located at the lowest point of the storage tank. The tank drain pipe shall discharge as required for overflow pipes and shall not be smaller in size than specified in Table P2910.9.6. Not less than one cleanout shall be provided on each drain pipe in accordance with Section P3005.2.

P2910.10 Marking and signage. Each nonpotable water storage tank shall be labeled with its rated capacity. The contents of storage tanks shall be identified with the words "CAUTION: NONPOTABLE WATER—DO NOT DRINK." Where an opening is provided that could allow the entry of personnel, the opening shall be marked with the words, "DANGER—CONFINED SPACE." Markings shall be indelibly printed on the tank, or on a tag or sign constructed of corrosion-resistant waterproof material that is mounted on the tank. The letters of the words shall be not less than 0.5 inches (12.7 mm) in height and shall be of a color in contrast with the background on which they are applied.

P2910.11 Storage tank tests. Storage tanks shall be tested in accordance with the following:

1. Storage tanks shall be filled with water to the overflow line prior to and during inspection. Seams and joints shall be left exposed and the tank shall remain water tight without leakage for a period of 24 hours.
2. After 24 hours, supplemental water shall be introduced for a period of 15 minutes to verify proper drainage of the overflow system and leaks do not exist.
3. Following a successful test of the overflow, the water level in the tank shall be reduced to a level that is 2 inches (51 mm) below the makeup water trigger point by using the tank drain. The tank drain shall be observed for proper operation. The makeup water system shall be observed for proper operation, and successful automatic shutoff of the system at the refill threshold shall be verified. Water shall not be drained from the overflow at any time during the refill test.

P2910.12 System abandonment. If the owner of an on-site nonpotable water reuse system or rainwater collection and conveyance system elects to cease use of or fails to properly maintain such system, the system shall be abandoned and shall comply with the following:

1. System piping connecting to a utility-provided water system shall be removed or disabled.
2. The distribution piping system shall be replaced with an *approved* potable water supply piping system. Where an existing potable water pipe system is already in place, the fixtures shall be connected to the existing system.
3. The storage tank shall be secured from accidental access by sealing or locking tank inlets and access points, or filled with sand or equivalent.

P2910.13 Separation requirements for nonpotable water piping. Nonpotable water collection and distribution piping and reclaimed water piping shall be separated from the building sewer and potable water piping underground by 5 feet (1524 mm) of undisturbed or compacted earth. Nonpotable water collection and distribution piping shall not be located in, under or above cesspools, septic tanks, septic tank drainage fields or seepage pits. Buried nonpotable water piping shall comply with the requirements of Section P2604.

Exceptions:

1. The required separation distance shall not apply where the bottom of the nonpotable water pipe within 5 feet (1524 mm) of the sewer is not less than 12 inches (305 mm) above the top of the highest point of the sewer and the pipe materials conforms to Table P3002.2.
2. The required separation distance shall not apply where the bottom of the potable water service pipe within 5 feet (1524 mm) of the nonpotable water pipe is not less than 12 inches (305 mm) above the top of the highest point of the nonpotable water pipe and the pipe materials comply with the requirements of Table P2906.5
3. The required separation distance shall not apply where a nonpotable water pipe is located in the same trench with a building sewer that is constructed of materials that comply with the requirements of Table P3002.2.
4. The required separation distance shall not apply where a nonpotable water pipe crosses a sewer pipe provided that the nonpotable water pipe is sleeved to not less than 5 feet (1524 mm) horizontally from the sewer pipe centerline on both sides of such crossing, with pipe materials that comply with Table P3002.2
5. The required separation distance shall not apply where a potable water service pipe crosses a nonpotable water pipe, provided that the potable water service pipe is sleeved for a distance of not less than 5 feet (1524 mm) horizontally from the centerline of the nonpotable pipe on both sides of such crossing, with pipe materials that comply with Table P3002.2.
6. The required separation distance shall not apply to irrigation piping located outside of a building and downstream of the backflow preventer where nonpotable water is used for outdoor applications.

P2910.14 Outdoor outlet access. Sillcocks, hose bibs, wall hydrants, yard hydrants and other outdoor outlets supplied by nonpotable water shall be located in a locked vault or shall be operable only by means of a removable key.

SECTION P2911
ON-SITE NONPOTABLE WATER REUSE SYSTEMS

P2911.1 General. The provisions of this section shall govern the construction, installation, alteration and repair of on-site nonpotable water reuse systems for the collection, storage, treatment and distribution of on-site sources of nonpotable water as permitted by the jurisdiction.

P2911.2 Sources. On-site nonpotable water reuse systems shall collect waste discharge only from the following sources: bathtubs, showers, lavatories, clothes washers and laundry trays. Water from other *approved* nonpotable sources including swimming pool backwash operations, air conditioner condensate, rainwater, foundation drain water, fluid cooler discharge water and fire pump test water shall be permitted to be collected for reuse by on-site nonpotable water reuse systems, as approved by the building official and as appropriate for the intended application.

P2911.2.1 Prohibited sources. Reverse osmosis system reject water, water softener backwash water, kitchen sink wastewater, dishwasher wastewater and wastewater containing urine or fecal matter shall not be collected for reuse within an on- site nonpotable water reuse system.

P2911.3 Traps. Traps serving fixtures and devices discharging waste water to on-site nonpotable water reuse systems shall comply with the Section P3201.2.

P2911.4 Collection pipe. On-site nonpotable water reuse systems shall utilize drainage piping *approved* for use within plumbing drainage systems to collect and convey untreated water for reuse. Vent piping *approved* for use within plumbing venting systems shall be utilized for vents within the gray-water system. Collection and vent piping materials shall comply with Section P3002.

P2911.4.1 Installation. Collection piping conveying untreated water for reuse shall be installed in accordance with Section P3005.

P2911.4.2 Joints. Collection piping conveying untreated water for reuse shall utilize joints *approved* for use with the distribution piping and appropriate for the intended applications as specified in Section P3002.

P2911.4.3 Size. Collection piping conveying untreated water for reuse shall be sized in accordance with drainage sizing requirements specified in Section P3005.4.

P2911.4.4 Marking. Additional marking of collection piping conveying untreated water for reuse shall not be required beyond that required for sanitary drainage, waste and vent piping by the Chapter 30.

P2911.5 Filtration. Untreated water collected for reuse shall be filtered as required for the intended end use. Filters shall be accessible for inspection and maintenance. Filters shall utilize a pressure gauge or other *approved* method to provide indication when a filter requires servicing or replacement. Filters shall be installed with shutoff valves immediately upstream and downstream to allow for isolation during maintenance.

P2911.6 Disinfection. Nonpotable water collected on site for reuse shall be disinfected, treated or both to provide the quality of water needed for the intended end-use application. Where the intended end-use application does not have requirements for the quality of water, disinfection and treatment of water collected on site for reuse shall not be required. Nonpotable water collected on site containing untreated gray water shall be retained in collection reservoirs for not more than 24 hours.

P2911.6.1 Gray water used for fixture flushing. Gray water used for flushing water closets and urinals shall be disinfected and treated by an on-site water reuse treatment system complying with NSF 350.

P2911.7 Storage tanks. Storage tanks utilized in on-site nonpotable water reuse systems shall comply with Section P2910.9 and Sections P2911.7.1 through P2911.7.3.

P2911.7.1 Location. Storage tanks shall be located with a minimum horizontal distance between various elements as indicated in Table P2911.7.1.

TABLE P2911.7.1
LOCATION OF NONPOTABLE WATER REUSE STORAGE TANKS

ELEMENT	MINIMUM HORIZONTAL DISTANCE FROM STORAGE TANK (feet)
Critical root zone (CRZ) of protected trees	2
Lot line adjoining private lots	5
Seepage pits	5
Septic tanks	5
Water wells	50
Streams and lakes	50
Water service	5
Public water main	10

For SI: 1 foot = 304.8 mm

P2911.7.2 Inlets. Storage tank inlets shall be designed to introduce water into the tank with minimum turbulence, and shall be located and designed to avoid agitating the contents of the storage tank.

P2911.7.3 Outlets. Outlets shall be located not less than 4 inches (102 mm) above the bottom of the storage tank, and shall not skim water from the surface.

P2911.8 Valves. Valves shall be supplied on on-site nonpotable water reuse systems in accordance with Sections P2911.8.1 and P2911.8.2.

P2911.8.1 Bypass valve. One three-way diverter valve certified to NSF 50 or other *approved* device shall be installed on collection piping upstream of each storage tank, or drainfield, as applicable, to divert untreated on-site reuse sources to the sanitary sewer to allow servicing and inspection of the system. Bypass valves shall be installed downstream of fixture traps and vent connections. Bypass valves shall be labeled to indicate the direction of flow, connection and storage tank or drainfield connection. Bypass valves shall be installed in accessible locations. Two shutoff valves shall not be installed to serve as a bypass valve.

P2911.8.2 Backwater valve. Backwater valves shall be installed on each overflow and tank drain pipe. Backwater valves shall be in accordance with Section P3008.

P2911.9 Pumping and control system. Mechanical equipment including pumps, valves and filters shall be accessible and removable in order to perform repair, maintenance and cleaning. The minimum flow rate and flow pressure delivered by the pumping system shall be appropriate for the application and in accordance with Section P2903.

P2911.10 Water-pressure-reducing valve or regulator. Where the water pressure supplied by the pumping system exceeds 80 psi (552 kPa) static, a pressure-reducing valve shall be installed to reduce the pressure in the nonpotable water distribution system piping to 80 psi (552 kPa) static or less. Pressure-reducing valves shall be specified and installed in accordance with Section P2903.3.1.

P2911.11 Distribution pipe. Distribution piping utilized in on-site nonpotable water reuse systems shall comply with Sections P2911.11.1 through P2911.11.3.

Exception: Irrigation piping located outside of the building and downstream of a backflow preventer.

P2910.11.1 Materials, joints and connections. Distribution piping shall conform to the standards and requirements specified in Section P2906 for nonpotable water.

P2911.11.2 Design. On-site nonpotable water reuse distribution piping systems shall be designed and sized in accordance with Section P2903 for the intended application.

P2911.11.3 Marking. On-site nonpotable water distribution piping labeling and marking shall comply with Section P2901.2

P2911.12 Tests and inspections. Tests and inspections shall be performed in accordance with Sections P2911.12.1 through P2911.12.6.

P2911.12.1 Collection pipe and vent test. Drain, waste and vent piping used for on-site water reuse systems shall be tested in accordance with Section P2503.

P2911.12.2 Storage tank test. Storage tanks shall be tested in accordance with Section P2910.11.

P2911.12.3 Water supply system test. The testing of makeup water supply piping and distribution piping shall be conducted in accordance with Section P2503.7.

P2911.12.4 Inspection and testing of backflow prevention assemblies. The testing of backflow preventers and backwater valves shall be conducted in accordance with Section P2503.8.

P2911.12.5 Inspection of vermin and insect protection. Inlets and vents to the system shall be inspected to verify that each is protected to prevent the entrance of insects and vermin into the storage tank and piping systems in accordance with Section P2910.7.

P2911.12.6 Water quality test. The quality of the water for the intended application shall be verified at the point of use in accordance with the requirements of the jurisdiction.

P2911.13 Operation and maintenance manuals. Operation and maintenance materials shall be supplied with nonpotable on-site water reuse systems in accordance with Sections P2910.13.1 through P2910.13.4.

P2911.13.1 Manual. A detailed operations and maintenance manual shall be supplied in hard-copy form for each system.

P2911.13.2 Schematics. The manual shall include a detailed system schematic, the location of system components and a list of system components that includes the manufacturers and model numbers of the components.

P2911.13.3 Maintenance procedures. The manual shall provide a schedule and procedures for system components requiring periodic maintenance. Consumable parts including filters shall be noted along with part numbers.

P2911.13.4 Operations procedures. The manual shall include system startup and shutdown procedures. The manual shall include detailed operating procedures for the system.

SECTION P2912
NONPOTABLE RAINWATER COLLECTION AND DISTRIBUTION SYSTEMS

P2912.1 General. The provisions of this section shall govern the construction, installation, alteration, and repair of rainwater collection and conveyance systems for the collection, storage, treatment and distribution of rainwater for nonpotable applications, as permitted by the jurisdiction.

P2912.2 Collection surface. Rainwater shall be collected only from above-ground impervious roofing surfaces constructed from *approved* materials. Collection of water from vehicular parking or pedestrian walkway surfaces shall be prohibited except where the water is used exclusively for landscape irrigation. Overflow and bleed-off pipes from roof-mounted *appliances* including, but not limited to, evaporative coolers, water heaters and solar water heaters shall not discharge onto rainwater collection surfaces.

P2912.3 Debris excluders. Downspouts and leaders shall be connected to a roof washer and shall be equipped with a debris excluder or equivalent device to prevent the contamination of collected rainwater with leaves, sticks, pine needles and similar material. Debris excluders and equivalent devices shall be self-cleaning.

P2912.4 Roof washer. An amount of rainwater shall be diverted at the beginning of each rain event, and not allowed to enter the storage tank, to wash accumulated debris from the collection surface. The amount of rainfall to be diverted shall be field adjustable as necessary to minimize storage tank water contamination. The roof washer shall not rely on manually operated valves or devices, and shall operate automatically. Diverted rainwater shall not be drained to the roof surface, and shall be discharged in a manner consistent with the storm water runoff requirements of the jurisdiction. Roof washers shall be accessible for maintenance and service.

P2912.5 Roof gutters and downspouts. Gutters and downspouts shall be constructed of materials that are compatible

with the collection surface and the rainwater quality for the desired end use. Joints shall be watertight.

P2912.5.1 Slope. Roof gutters, leaders and rainwater collection piping shall slope continuously toward collection inlets and shall be free of leaks. Gutters and downspouts shall have a slope of not less than $^1/_8$ inch per foot (10.4 mm/m) along their entire length. Gutters and downspouts shall be installed so that water does not pool at any point.

P2912.5.2 Cleanouts. Cleanouts shall be provided in the water conveyance system to allow access to filters, flushes, pipes and downspouts.

P2912.6 Drainage. Water drained from the roof washer or debris excluder shall not be drained to the sanitary sewer. Such water shall be diverted from the storage tank and shall discharge to a location that will not cause erosion or damage to property. Roof washers and debris excluders shall be provided with an automatic means of self-draining between rain events and shall not drain onto roof surfaces.

P2912.7 Collection pipe. Rainwater collection and conveyance systems shall utilize drainage piping *approved* for use within plumbing drainage systems to collect and convey captured rainwater. Vent piping *approved* for use within plumbing venting systems shall be utilized for vents within the rainwater system. Collection and vent piping materials shall comply with Section P3002.

P2912.7.1 Installation. Collection piping conveying captured rainwater shall be installed in accordance with Section P3005.3.

P2912.7.2 Joints. Collection piping conveying captured rainwater shall utilize joints *approved* for use with the distribution piping and appropriate for the intended applications as specified in Section P3003.

P2912.7.3 Size. Collection piping conveying captured rainwater shall be sized in accordance with drainage-sizing requirements specified in Section P3005.4.

P2912.7.4 Marking. Additional marking of collection piping conveying captured rainwater for reuse shall not be required beyond that required for sanitary drainage, waste, and vent piping by Chapter 30.

P2912.8 Filtration. Collected rainwater shall be filtered as required for the intended end use. Filters shall be accessible for inspection and maintenance. Filters shall utilize a pressure gauge or other *approved* method to provide indication when a filter requires servicing or replacement. Filters shall be installed with shutoff valves installed immediately upstream and downstream to allow for isolation during maintenance.

P2912.9 Disinfection. Where the intended application for rainwater requires disinfection or other treatment or both, it shall be disinfected as needed to ensure that the required water quality is delivered at the point of use.

P2912.10 Storage tanks. Storage tanks utilized in nonpotable rainwater collection and conveyance systems shall comply with Section P2910.9 and Sections P2912.10.1 through P2912.10.3.

P2912.10.1 Location. Storage tanks shall be located with a minimum horizontal distance between various elements as indicated in Table P2912.10.1.

P2912.10.2 Inlets. Storage tank inlets shall be designed to introduce collected rainwater into the tank with minimum turbulence, and shall be located and designed to avoid agitating the contents of the storage tank.

P2912.10.3 Outlets. Outlets shall be located not less than 4 inches (102 mm) above the bottom of the storage tank and shall not skim water from the surface.

P2912.11 Valves. Valves shall be supplied on rainwater collection and conveyance systems in accordance with Sections P2912.11.1 and P2912.11.2.

P2912.11.1 Influent diversion. A means shall be provided to divert storage tank influent to allow for maintenance and repair of the storage tank system.

P2912.11.2 Backwater valve. Backwater valves shall be installed on each overflow and tank drain pipe. Backwater valves shall be in accordance with Section P3008.

P2912.12 Pumping and control system. Mechanical equipment including pumps, valves and filters shall be easily accessible and removable in order to perform repair, maintenance and cleaning. The minimum flow rate and flow pressure delivered by the pumping system shall appropriate for the application and in accordance with Section P2903.

P2912.13 Water-pressure-reducing valve or regulator. Where the water pressure supplied by the pumping system exceeds 80 psi (552 kPa) static, a pressure-reducing valve shall be installed to reduce the pressure in the rainwater distribution system piping to 80 psi (552 kPa) static or less. Pressure-reducing valves shall be specified and installed in accordance with Section P2903.3.1.

P2912.14 Distribution pipe. Distribution piping utilized in rainwater collection and conveyance systems shall comply with Sections P2912.14.1 through P2912.14.3.

Exception: Irrigation piping located outside of the building and downstream of a backflow preventer.

TABLE P2912.10.1
LOCATION OF RAINWATER STORAGE TANKS

ELEMENT	MINIMUM HORIZONTAL DISTANCE FROM STORAGE TANK (feet)
Critical root zone (CRZ) of protected trees	2
Lot line adjoining private lots	5
Seepage pits	5
Septic tanks	5

For SI: 1 foot = 304.8 mm

P2912.14.1 Materials, joints and connections. Distribution piping shall conform to the standards and requirements specified in Section P2906 for nonpotable water.

P2912.14.2 Design. Distribution piping systems shall be designed and sized in accordance with the Section P2903 for the intended application.

P2912.14.3 Labeling and marking. Nonpotable rainwater distribution piping labeling and marking shall comply with Section P2901.2.

P2912.15 Tests and inspections. Tests and inspections shall be performed in accordance with Sections P2912.15.1 through P2912.15.8.

P2912.15.1 Roof gutter inspection and test. Roof gutters shall be inspected to verify that the installation and slope is in accordance with Section P2912.5.1. Gutters shall be tested by pouring not less than one gallon of water (3.8 L) into the end of the gutter opposite the collection point. The gutter being tested shall not leak and shall not retain standing water.

P2912.15.2 Roofwasher test. Roofwashers shall be tested by introducing water into the gutters. Proper diversion of the first quantity of water in accordance with the requirements of Section P2912.4 shall be verified.

P2912.15.3 Collection pipe and vent test. Drain, waste and vent piping used for rainwater collection and conveyance systems shall be tested in accordance with Section P2503.

P2912.15.4 Storage tank test. Storage tanks shall be tested in accordance with the Section P2910.11.

P2912.15.5 Water supply system test. The testing of makeup water supply piping and distribution piping shall be conducted in accordance with Section P2503.7.

P2912.15.6 Inspection and testing of backflow prevention assemblies. The testing of backflow preventers and backwater valves shall be conducted in accordance with Section P2503.8.

P2912.15.7 Inspection of vermin and insect protection. Inlets and vents to the system shall be inspected to verify that each is protected to prevent the entrance of insects and vermin into the storage tank and piping systems in accordance with Section P2910.7.

P2912.15.8 Water quality test. The quality of the water for the intended application shall be verified at the point of use in accordance with the requirements of the jurisdiction.

P2912.16 Operation and maintenance manuals. Operation and maintenance manuals shall be supplied with rainwater collection and conveyance systems in accordance with Sections P2912.16.1 through P2912.16.4.

P2912.16.1 Manual. A detailed operations and maintenance manual shall be supplied in hard-copy form for each system.

P2912.16.2 Schematics. The manual shall include a detailed system schematic, the location of system components and a list of system components that includes the manufacturers and model numbers of the components.

P2912.16.3 Maintenance procedures. The manual shall provide a maintenance schedule and procedures for system components requiring periodic maintenance. Consumable parts, including filters, shall be noted along with part numbers.

P2912.16.4 Operations procedures. The manual shall include system startup and shutdown procedures, and detailed operating procedures.

SECTION P2913
RECLAIMED WATER SYSTEMS

P2913.1 General. The provisions of this section shall govern the construction, installation, alteration and repair of systems supplying nonpotable reclaimed water.

P2913.2 Water-pressure-reducing valve or regulator. Where the reclaimed water pressure supplied to the building exceeds 80 psi (552 kPa) static, a pressure-reducing valve shall be installed to reduce the pressure in the reclaimed water distribution system piping to 80 psi (552 kPa) static or less. Pressure-reducing valves shall be specified and installed in accordance with Section P2903.3.1

P2913.3 Reclaimed water systems. The design of the reclaimed water systems shall conform to accepted engineering practice.

P2913.3.1 Distribution pipe. Distribution piping shall comply with Sections P2913.3.1.1 through P2913.3.1.3.

Exception: Irrigation piping located outside of the building and downstream of a backflow preventer.

P2913.3.1.1 Materials, joints and connections. Distribution piping conveying reclaimed water shall conform to standards and requirements specified in Section P2905 for nonpotable water.

P2913.3.1.2 Design. Distribution piping systems shall be designed and sized in accordance with Section P2903 for the intended application.

P2913.3.1.3 Labeling and marking. Nonpotable rainwater distribution piping labeling and marking shall comply with Section P2901.2.

P2913.4 Tests and inspections. Tests and inspections shall be performed in accordance with Sections P2913.4.1 and P2913.4.2.

P2913.4.1 Water supply system test. The testing of makeup water supply piping and reclaimed water distribution piping shall be conducted in accordance with Section P2503.7.

P2913.4.2 Inspection and testing of backflow prevention assemblies. The testing of backflow preventers shall be conducted in accordance with Section P2503.8.

CHAPTER 30

SANITARY DRAINAGE

User note: Code change proposals to this chapter will be considered by the IRC – Plumbing and Mechanical Code Development Committee during the 2015 (Group A) Code Development Cycle. See explanation on page xvii.

SECTION P3001 GENERAL

P3001.1 Scope. The provisions of this chapter shall govern the materials, design, construction and installation of sanitary drainage systems. Plumbing materials shall conform to the requirements of this chapter. The drainage, waste and vent (DWV) system shall consist of piping for conveying wastes from plumbing fixtures, appliances and appurtenances, including fixture traps; above-grade drainage piping; below-grade drains within the building (*building drain*); below- and above-grade venting systems; and piping to the public sewer or private septic system.

P3001.2 Protection from freezing. No portion of the above-grade DWV system, other than vent terminals, shall be located outside of a building, in *attics* or crawl spaces, concealed in outside walls, or in any other place subjected to freezing temperatures unless adequate provision is made to protect them from freezing by insulation or heat or both, except in localities having a winter design temperature greater than 32°F (0°C) (ASHRAE 97.5 percent column, winter, see Chapter 3).

P3001.3 Flood-resistant installation. In flood hazard areas as established by Table R301.2(1), drainage, waste and vent systems shall be located and installed to prevent infiltration of floodwaters into the systems and discharges from the systems into floodwaters.

SECTION P3002 MATERIALS

P3002.1 Piping within buildings. Drain, waste and vent (DWV) piping in buildings shall be as indicated in Tables P3002.1(1) and P3002.1(2) except that galvanized wrought-iron or galvanized steel pipe shall not be used underground and shall be maintained not less than 6 inches (152 mm) above ground. Allowance shall be made for the thermal expansion and contraction of plastic piping.

P3002.2 Building sewer. *Building sewer* piping shall be as shown in Table P3002.2. Forced main sewer piping shall conform to one of the standards for ABS plastic pipe, copper or copper-alloy tubing, PVC plastic pipe or pressure-rated pipe indicated in Table P3002.2.

P3002.2.1 Building sewer pipe near the water service. The proximity of a *building sewer* to a water service shall comply with Section P2905.4.2.

P3002.3 Fittings. Pipe fittings shall be *approved* for installation with the piping material installed and shall comply with the applicable standards indicated in Table P3002.3.

P3002.3.1 Drainage. Drainage fittings shall have a smooth interior waterway of the same diameter as the piping served. Fittings shall conform to the type of pipe used. Drainage fittings shall not have ledges, shoulders or reductions that can retard or obstruct drainage flow in the piping. Threaded drainage pipe fittings shall be of the recessed drainage type, black or galvanized. Drainage fittings shall be designed to maintain one-fourth unit vertical in 12 units horizontal (2-percent slope) grade. This section shall not be applicable to tubular waste fittings used to convey vertical flow upstream of the trap seal liquid level of a fixture trap.

TABLE P3002.1(1)
ABOVE-GROUND DRAINAGE AND VENT PIPE

MATERIAL	STANDARD
Acrylonitrile butadiene styrene (ABS) plastic pipe in IPS diameters, including schedule 40, DR 22 (PS 200) and DR 24 (PS 140); with a solid, cellular core or composite wall	ASTM D 2661; ASTM F 628; ASTM F 1488; CSA B181.1
Cast-iron pipe	ASTM A 74; CISPI 301; ASTM A 888
Copper or copper-alloy pipe	ASTM B 42; ASTM B 43; ASTM B 302
Copper or copper-alloy tubing (Type K, L, M or DWV)	ASTM B 75; ASTM B 88; ASTM B 251; ASTM B 306
Galvanized steel pipe	ASTM A 53
Polyolefin pipe	CSA B181.3
Polyvinyl chloride (PVC) plastic pipe in IPS diameters, including schedule 40, DR 22 (PS 200) and DR 24 (PS 140); with a solid, cellular core or composite wall	ASTM D 2665; ASTM F 891; CSA B181.2; ASTM F 1488
Polyvinyl chloride (PVC) plastic pipe with a 3.25 inch O.D. and a solid, cellular core or composite wall	ASTM D 2949; ASTM F 1488
Stainless steel drainage systems, Types 304 and 316L	ASME A 112.3.1

For SI: 1 inch = 25.4 mm.

TABLE P3002.1(2)
UNDERGROUND BUILDING DRAINAGE AND VENT PIPE

PIPE	STANDARD
Acrylonitrile butadiene styrene (ABS) plastic pipe in IPS diameters, including schedule 40, DR 22 (PS 200) and DR 24 (PS 140); with a solid, cellular core or composite wall	ASTM D 2661; ASTM F 628; ASTM F 1488; CSA B181.1
Cast-iron pipe	ASTM A 74; CISPI 301; ASTM A 888
Copper or copper alloy tubing (Type K, L, M or DWV)	ASTM B 75; ASTM B 88; ASTM B 251; ASTM B 306
Polyolefin pipe	ASTM F 1412; CSA B181.3
Polyvinyl chloride (PVC) plastic pipe in IPS diameters, including schedule 40, DR 22 (PS 200) and DR 24 (PS 140); with a solid, cellular core or composite wall	ASTM D 2665; ASTM F 891; ASTM F 1488; CSA B181.2
Polyvinyl chloride (PVC) plastic pipe with a 3.25 inch O.D. and a solid, cellular core or composite wall	ASTM D 2949; ASTM F 1488
Stainless steel drainage systems, Type 316L	ASME A 112.3.1

For SI: 1 inch = 25.4 mm.

TABLE P3002.2
BUILDING SEWER PIPE

MATERIAL	STANDARD
Acrylonitrile butadiene styrene (ABS) plastic pipe in IPS diameters, including schedule 40, DR 22 (PS 200) and DR 24 (PS 140); with a solid, cellular core or composite wall	ASTM D 2661; ASTM F 628; ASTM F 1488
Cast-iron pipe	ASTM A 74; ASTM A 888; CISPI 301
Acrylonitrile butadiene styrene (ABS) plastic pipe in sewer and drain diameters, including SDR 42 (PS 20), PS35, SDR 35 (PS 45), PS50, PS100, PS140, SDR 23.5 (PS 150) and PS200; with a solid, cellular core or composite wall	ASTM F 1488; ASTM D 2751
Polyvinyl chloride (PVC) plastic pipe in sewer and drain diameters, including PS 25, SDR 41 (PS 28), PS 35, SDR 35 (PS 46), PS 50, PS 100, SDR 26 (PS 115), PS140 and PS 200; with a solid, cellular core or composite wall	ASTM F 891; ASTM F 1488; ASTM D 3034; CSA B182.2; CSA B182.4
Concrete pipe	ASTM C 14; ASTM C 76; CSA A257.1M; CSA A257.2M
Copper or copper-alloy tubing (Type K or L)	ASTM B 75; ASTM B 88; ASTM B 251
Polyethylene (PE) plastic pipe (SDR-PR)	ASTM F 714
Polyolefin pipe	ASTM F 1412; CSA B181.3
Polyvinyl chloride (PVC) plastic pipe in IPS diameters, including schedule 40, DR 22 (PS 200) and DR 24 (PS 140); with solid, cellular core or composite wall	ASTM D 2665; ASTM D 2949; ASTM D 3034; ASTM F 1412; CSA B182.2; CSA B182.4
Polyvinyl chloride (PVC) plastic pipe with a 3.25 inch O.D. and a solid, cellular core or composite wall	ASTM D 2949, ASTM F 1488
Stainless steel drainage systems, Types 304 and 316L	ASME A 112.3.1
Vitrified clay pipe	ASTM C 425; ASTM C 700

For SI: 1 inch = 25.4 mm.

TABLE P3002.3
PIPE FITTINGS

PIPE MATERIAL	FITTING STANDARD
Acrylonitrile butadiene styrene (ABS) plastic pipe in IPS diameters	ASTM D 2661; ASTM D 3311; ASTM F 628; CSA B181.1
Cast-iron	ASME B 16.4; ASME B 16.12; ASTM A 74; ASTM A 888; CISPI 301
Acrylonotrile butadiene styrene (ABS) plastic pipe in sewer and drain diameters	ASTM D 2751
Polyvinyl chloride (PVC) plastic pipe in sewer and drain diameters	ASTM D 3034
Copper or copper alloy	ASME B 16.15; ASME B 16.18; ASME B 16.22; ASME B 16.23; ASME B 16.26; ASME B 16.29
Gray iron and ductile iron	AWWA C 110/A21.10
Polyolefin	ASTM F 1412; CSA B181.3
Polyvinyl chloride (PVC) plastic in IPS diameters	ASTM D 2665; ASTM D 3311; ASTM F 1866
Polyvinyl chloride (PVC) plastic pipe with a 3.25 inch O.D.	ASTM D 2949
PVC fabricated fittings	ASTM F 1866
Stainless steel drainage systems, Types 304 and 316L	ASME A 112.3.1
Vitrified clay	ASTM C 700

For SI: 1 inch = 25.4 mm.

P3002.4 Other materials. Sheet lead, lead bends, lead traps and sheet copper shall comply with Sections P3002.4.1 through P3002.4.3.

P3002.4.1 Sheet lead. Sheet lead shall weigh not less than indicated for the following applications:

1. Flashing of vent terminals, 3 psf (15 kg/m^2).
2. Prefabricated flashing for vent pipes, $2^1/_2$ psf (12 kg/m^2).

P3002.4.2 Lead bends and traps. Lead bends and lead traps shall be not less than $^1/_8$-inch (3 mm) wall thickness.

P3002.4.3 Sheet copper. Sheet copper shall weigh not less than indicated for the following applications:

1. General use, 12 ounces per square feet (4 kg/m^2).
2. Flashing for vent pipes, 8 ounces per square feet (2.5 kg/m^2).

SECTION P3003
JOINTS AND CONNECTIONS

P3003.1 Tightness. Joints and connections in the DWV system shall be gas tight and water tight for the intended use or pressure required by test.

P3003.1.1 Threaded joints, general. Pipe and fitting threads shall be tapered.

P3003.2 Prohibited joints. Running threads and bands shall not be used in the drainage system. Drainage and vent piping shall not be drilled, tapped, burned or welded.

The following types of joints and connections shall be prohibited:

1. Cement or concrete.
2. Mastic or hot-pour bituminous joints.
3. Joints made with fittings not *approved* for the specific installation.
4. Joints between different diameter pipes made with elastomeric rolling O-rings.
5. Solvent-cement joints between different types of plastic pipe.
6. Saddle-type fittings.

P3003.3 ABS plastic. Joints between ABS plastic pipe or fittings shall comply with Sections P3003.3.1 through P3003.3.3.

P3003.3.1 Mechanical joints. Mechanical joints on drainage pipes shall be made with an elastomeric seal conforming to ASTM C 1173, ASTM D 3212 or CSA B602. Mechanical joints shall be installed only in underground systems unless otherwise *approved*. Joints shall be installed in accordance with the manufacturer's instructions.

P3003.3.2 Solvent cementing. Joint surfaces shall be clean and free from moisture. Solvent cement that conforms to ASTM D 2235 or CSA B181.1 shall be applied to joint surfaces. The joint shall be made while the cement is wet. Joints shall be made in accordance with ASTM D 2235, ASTM D 2661, ASTM F 628 or CSA B181.1. Solvent-cement joints shall be permitted above or below ground.

P3003.3.3 Threaded joints. Threads shall conform to ASME B1.20.1. Schedule 80 or heavier pipe shall be permitted to be threaded with dies specifically designed for plastic pipe. *Approved* thread lubricant or tape shall be applied on the male threads only.

P3003.4 Cast iron. Joints between cast-iron pipe or fittings shall comply with Sections P3003.4.1 through P3003.4.3.

P3003.4.1 Caulked joints. Joints for hub and spigot pipe shall be firmly packed with oakum or hemp. Molten lead shall be poured in one operation to a depth of not less than 1 inch (25 mm). The lead shall not recede more than $^1/_8$ inch (3 mm) below the rim of the hub and shall be caulked tight. Paint, varnish or other coatings shall not be permitted on the jointing material until after the joint has been tested and *approved*. Lead shall be run in one pouring and shall be caulked tight.

P3003.4.2 Compression gasket joints. Compression gaskets for hub and spigot pipe and fittings shall conform to ASTM C 564. Gaskets shall be compressed when the pipe is fully inserted.

P3003.4.3 Mechanical joint coupling. Mechanical joint couplings for hubless pipe and fittings shall consist of an elastomeric sealing sleeve and a metallic shield that comply with CISPI 310, ASTM C 1277 or ASTM C 1540. The elastomeric sealing sleeve shall conform to ASTM C 564 or CSA B602 and shall have a center stop. Mechanical joint couplings shall be installed in accordance with the manufacturer's instructions.

P3003.5 Concrete joints. Joints between concrete pipe and fittings shall be made with an elastomeric seal conforming to ASTM C 443, ASTM C 1173, CSA A257.3M or CSA B602.

P3003.6 Copper and copper-alloy pipe and tubing. Joints between copper or copper-alloy pipe tubing or fittings shall comply with Sections P3003.6.1 through P3003.6.4.

P3003.6.1 Brazed joints. All joint surfaces shall be cleaned. An *approved* flux shall be applied where required. Brazing materials shall have a melting point in excess of 1,000°F (538°C). Brazing alloys filler metal shall be in accordance with AWS A5.8.

P3003.6.2 Mechanical joints. Mechanical joints shall be installed in accordance with the manufacturer's instructions.

P3003.6.3 Soldered joints. Copper and copper-alloy joints shall be soldered in accordance with ASTM B 828. Cut tube ends shall be reamed to the full inside diameter of the tube end. All joint surfaces shall be cleaned. Fluxes for soldering shall be in accordance with ASTM B 813 and shall become noncorrosive and nontoxic after soldering. The joint shall be soldered with a solder conforming to ASTM B 32.

P3003.6.4 Threaded joints. Threads shall conform to ASME B1.20.1. Pipe-joint compound or tape shall be applied on the male threads only.

P3003.7 Steel. Joints between galvanized steel pipe or fittings shall comply with Sections P3003.7.1 and P3003.7.2.

P3003.7.1 Threaded joints. Threads shall conform to ASME B1.20.1. Pipe-joint compound or tape shall be applied on the male threads only.

P3003.7.2 Mechanical joints. Joints shall be made with an *approved* elastomeric seal. Mechanical joints shall be installed in accordance with the manufacturer's instructions.

P3003.8 Lead. Joints between lead pipe or fittings shall comply with Sections P3003.8.1 and P3003.8.2.

P3003.8.1 Burned. Burned joints shall be uniformly fused together into one continuous piece. The thickness of the joint shall be not less than the thickness of the lead being joined. The filler metal shall be of the same material as the pipe.

P3003.8.2 Wiped. Joints shall be fully wiped, with an exposed surface on each side of the joint not less than $^3/_4$ inch (19 mm). The joint shall be not less than $^3/_8$ inch (9.5 mm) thick at the thickest point.

P3003.9 PVC plastic. Joints between PVC plastic pipe or fittings shall comply with Sections P3003.9.1 through P3003.9.3.

P3003.9.1 Mechanical joints. Mechanical joints on drainage pipe shall be made with an elastomeric seal conforming to ASTM C 1173, ASTM D 3212 or CSA B602. Mechanical joints shall not be installed in above-ground systems, unless otherwise *approved*. Joints shall be installed in accordance with the manufacturer's instructions.

P3003.9.2 Solvent cementing. Joint surfaces shall be clean and free from moisture. A purple primer that conforms to ASTM F 656 shall be applied. Solvent cement not purple in color and conforming to ASTM D 2564, CSA B137.3 or CSA B181.2 shall be applied to all joint surfaces. The joint shall be made while the cement is wet, and shall be in accordance with ASTM D 2855. Solvent-cement joints shall be installed above or below ground.

Exception: A primer shall not be required where all of the following conditions apply:

1. The solvent cement used is third-party certified as conforming to ASTM D 2564.
2. The solvent cement is used only for joining PVC drain, waste and vent pipe and fittings in non-pressure applications in sizes up to and including 4 inches (102 mm) in diameter

P3003.9.3 Threaded joints. Threads shall conform to ASME B1.20.1. Schedule 80 or heavier pipe shall be permitted to be threaded with dies specifically designed for plastic pipe. *Approved* thread lubricant or tape shall be applied on the male threads only.

P3003.10 Vitrified clay. Joints between vitrified clay pipe or fittings shall be made with an elastomeric seal conforming to ASTM C 425, ASTM C 1173 or CSA B602.

P3003.11 Polyolefin plastic. Joints between polyolefin plastic pipe and fittings shall comply with Sections P3003.11.1 and P3003.11.2.

P3003.11.1 Heat-fusion joints. Heat-fusion joints for polyolefin pipe and tubing joints shall be installed with socket-type heat-fused polyolefin fittings or electrofusion polyolefin fittings. Joint surfaces shall be clean and free from moisture. The joint shall be undisturbed until cool. Joints shall be made in accordance with ASTM F 1412 or CSA B181.3.

P3003.11.2 Mechanical and compression sleeve joints. Mechanical and compression sleeve joints shall be installed in accordance with the manufacturer's instructions.

P3003.12 Polyethylene plastic pipe. Joints between polyethylene plastic pipe and fittings shall be underground and shall comply with Section P3003.12.1 or P3003.12.2.

P3003.12.1 Heat fusion joints. Joint surfaces shall be clean and free from moisture. Joint surfaces shall be cut, heated to melting temperature and joined using tools specifically designed for the operation. Joints shall be undisturbed until cool. Joints shall be made in accordance with ASTM D 2657 and the manufacturer's instructions.

P3003.12.2 Mechanical joints. Mechanical joints in drainage piping shall be made with an elastomeric seal conforming to ASTM C 1173, ASTM D 3212 or CSA B602. Mechanical joints shall be installed in accordance with the manufacturer's instructions.

P3003.13 Joints between different materials. Joints between different piping materials shall be made with a mechanical joint of the compression or mechanical-sealing type conforming to ASTM C 1173, ASTM C 1460 or ASTM C 1461. Connectors and adapters shall be *approved* for the application and such joints shall have an elastomeric seal conforming to ASTM C 425, ASTM C 443, ASTM C 564, ASTM C 1440, ASTM D 1869, ASTM F 477, CSA A257.3M or CSA B602, or as required in Sections P3003.13.1 through P3003.13.6. Joints between glass pipe and other types of materials shall be made with adapters having a TFE seal. Joints shall be installed in accordance with the manufacturer's instructions.

P3003.13.1 Copper or copper-alloy tubing to cast-iron hub pipe. Joints between copper or copper-alloy tubing and cast-iron hub pipe shall be made with a copper-alloy ferrule or compression joint. The copper or copper-alloy tubing shall be soldered to the ferrule in an *approved* manner, and the ferrule shall be joined to the cast-iron hub by a caulked joint or a mechanical compression joint.

P3003.13.2 Copper or copper-alloy tubing to galvanized steel pipe. Joints between copper or copper-alloy tubing and galvanized steel pipe shall be made with a copper-alloy fitting or dielectric fitting. The copper tubing shall be soldered to the fitting in an *approved* manner, and the fitting shall be screwed to the threaded pipe.

P3003.13.3 Cast-iron pipe to galvanized steel or brass pipe. Joints between cast-iron and galvanized steel or copper-alloy pipe shall be made by either caulked or threaded joints or with an *approved* adapter fitting.

P3003.13.4 Plastic pipe or tubing to other piping material. Joints between different types of plastic pipe or between plastic pipe and other piping material shall be made with an *approved* adapter fitting. Joints between plastic pipe and cast-iron hub pipe shall be made by a caulked joint or a mechanical compression joint.

P3003.13.5 Lead pipe to other piping material. Joints between lead pipe and other piping material shall be made by a wiped joint to a caulking ferrule, soldering nipple, or bushing or shall be made with an *approved* adapter fitting.

P3003.13.6 Stainless steel drainage systems to other materials. Joints between stainless steel drainage systems and other piping materials shall be made with *approved* mechanical couplings.

P3003.14 Joints between drainage piping and water closets. Joints between drainage piping and water closets or similar fixtures shall be made by means of a closet flange or a waste connector and sealing gasket compatible with the drainage system material, securely fastened to a structurally firm base. The joint shall be bolted, with an *approved* gasket flange to fixture connection complying with ASME A112.4.3 or setting compound between the fixture and the closet flange or waste connector and sealing gasket. The waste connector and sealing gasket joint shall comply with the joint-tightness test of ASME A112.4.3 and shall be installed in accordance with the manufacturer's instructions.

SECTION P3004
DETERMINING DRAINAGE FIXTURE UNITS

P3004.1 DWV system load. The load on DWV-system piping shall be computed in terms of drainage fixture unit (d.f.u.) values in accordance with Table P3004.1.

SECTION P3005
DRAINAGE SYSTEM

P3005.1 Drainage fittings and connections. Changes in direction in drainage piping shall be made by the appropriate use of sanitary tees, wyes, sweeps, bends or by a combination of these drainage fittings in accordance with Table P3005.1. Change in direction by combination fittings, heel or side inlets or increasers shall be installed in accordance with Table P3005.1 and Sections P3005.1.1 through P3005.1.4. based on the pattern of flow created by the fitting.

P3005.1.1 Horizontal to vertical (multiple connection fittings). Double fittings such as double sanitary tees and tee-wyes or *approved* multiple connection fittings and back-to-back fixture arrangements that connect two or more branches at the same level shall be permitted as long as directly opposing connections are the same size and the discharge into directly opposing connections is from similar fixture types or fixture groups. Double sanitary tee patterns shall not receive the discharge of back-to-back water closets and fixtures or appliances with pumping action discharge.

Exception: Back-to-back water closet connections to double sanitary tee patterns shall be permitted where the horizontal *developed length* between the outlet of the water closet and the connection to the double sanitary tee is 18 inches (457 mm) or greater.

P3005.1.2 Heel- or side-inlet quarter bends, drainage. Heel-inlet quarter bends shall be an acceptable means of connection, except where the quarter bends serves a water closet. A low-heel inlet shall not be used as a wet-vented connection. Side-inlet quarter bends shall be an acceptable means of connection for both drainage, wet venting and stack venting arrangements.

TABLE P3004.1
DRAINAGE FIXTURE UNIT (d.f.u.) VALUES FOR VARIOUS PLUMBING FIXTURES

TYPE OF FIXTURE OR GROUP OF FIXTURES	DRAINAGE FIXTURE UNIT VALUE (d.f.u.)[a]
Bar sink	1
Bathtub (with or without a shower head or whirlpool attachments)	2
Bidet	1
Clothes washer standpipe	2
Dishwasher	2
Floor drain[b]	0
Kitchen sink	2
Lavatory	1
Laundry tub	2
Shower stall	2
Water closet (1.6 gallons per flush)	3
Water closet (greater than 1.6 gallons per flush)	4
Full-bath group with bathtub (with 1.6 gallon per flush water closet, and with or without shower head and/or whirlpool attachment on the bathtub or shower stall)	5
Full-bath group with bathtub (water closet greater than 1.6 gallon per flush, and with or without shower head and/or whirlpool attachment on the bathtub or shower stall)	6
Half-bath group (1.6 gallon per flush water closet plus lavatory)	4
Half-bath group (water closet greater than 1.6 gallon per flush plus lavatory)	5
Kitchen group (dishwasher and sink with or without food-waste disposer)	2
Laundry group (clothes washer standpipe and laundry tub)	3
Multiple-bath groups[c]:	
1.5 baths	7
2 baths	8
2.5 baths	9
3 baths	10
3.5 baths	11

For SI: 1 gallon = 3.785 L.

a. For a continuous or semicontinuous flow into a drainage system, such as from a pump or similar device, 1.5 fixture units shall be allowed per gpm of flow. For a fixture not listed, use the highest d.f.u. value for a similar listed fixture.

b. A floor drain itself does not add hydraulic load. Where used as a receptor, the fixture unit value of the fixture discharging into the receptor shall be applicable.

c. Add 2 d.f.u. for each additional full bath.

TABLE P3005.1
FITTINGS FOR CHANGE IN DIRECTION

TYPE OF FITTING PATTERN	CHANGE IN DIRECTION		
	Horizontal to vertical[c]	Vertical to horizontal	Horizontal to horizontal
Sixteenth bend	X	X	X
Eighth bend	X	X	X
Sixth bend	X	X	X
Quarter bend	X	X[a]	X[a]
Short sweep	X	X[a,b]	X[a]
Long sweep	X	X	X
Sanitary tee	X[c]	—	—
Wye	X	X	X
Combination wye and eighth bend	X	X	X

For SI: 1 inch = 25.4 mm.

a. The fittings shall only be permitted for a 2-inch or smaller fixture drain.

b. Three inches and larger.

c. For a limitation on multiple connection fittings, see Section P3005.1.1.

P3005.1.3 Heel- or side-inlet quarter bends, venting. Heel-inlet or side-inlet quarter bends, or any arrangement of pipe and fittings producing a similar effect, shall be acceptable as a dry vent where the inlet is placed in a vertical position. The inlet is permitted to be placed in a horizontal position only where the entire fitting is part of a dry vent arrangement.

P3005.1.4 Water closet connection between flange and pipe. One-quarter bends 3 inches (76 mm) in diameter shall be acceptable for water closet or similar connections, provided that a 4-inch by 3-inch (102 mm by 76 mm) flange is installed to receive the closet fixture horn. Alternately, a 4-inch by 3-inch (102 mm by 76 mm) elbow shall be acceptable with a 4-inch (102 mm) flange.

P3005.1.5 Provisions for future fixtures. Where drainage has been roughed-in for future fixtures, the drainage unit values of the future fixtures shall be considered in determining the required drain sizes. Such future installations shall be terminated with an accessible permanent plug or cap fitting.

P3005.1.6 Change in size. The size of the drainage piping shall not be reduced in size in the direction of the flow. A 4-inch by 3-inch (102 mm by 76 mm) water closet connection shall not be considered as a reduction in size.

P3005.2 Cleanouts required. Cleanouts shall be provided for drainage piping in accordance with Sections P3005.2.1 through P3005.2.11.

P3005.2.1 Horizontal drains and building drains. Horizontal drainage pipes in buildings shall have cleanouts located at intervals of not more than 100 feet (30 480 mm). *Building drains* shall have cleanouts located at intervals of not more than 100 feet (30 480 mm) except where manholes are used instead of cleanouts, the manholes shall be located at intervals of not more than 400 feet (122 m). The interval length shall be measured from the cleanout or manhole opening, along the *developed length* of the piping to the next drainage fitting providing access for cleaning, the end of the horizontal drain or the end of the *building drain.*

Exception: Horizontal fixture drain piping serving a nonremovable trap shall not be required to have a cleanout for the section of piping between the trap and the vent connection for such trap.

P3005.2.2 Building sewers. *Building sewers* smaller than 8 inches (203 mm) shall have cleanouts located at intervals of not more than 100 feet (30 480 mm). *Building sewers* 8 inches (203 mm) and larger shall have a manhole located not more than 200 feet (60 960 mm) from the junction of the *building drain* and *building sewer* and at intervals of not more than 400 feet (122 m). The interval length shall be measured from the cleanout or manhole opening, along the *developed length* of the piping to the next drainage fitting providing access for cleaning, a manhole or the end of the *building sewer.*

P3005.2.3 Building drain and building sewer junction. The junction of the *building drain* and the *building sewer* shall be served by a cleanout that is located at the junction or within 10 feet (3048 mm) *developed length* of piping upstream of the junction. For the requirements of this section, removal of a water closet shall not be required to provide cleanout access.

P3005.2.4 Changes of direction. Where a horizontal drainage pipe, a *building drain* or a *building sewer* has a change of horizontal direction greater than 45 degrees (0.79 rad), a cleanout shall be installed at the change of direction. Where more than one change of horizontal direction greater than 45 degrees (0.79 rad) occurs within 40 feet (12 192 mm) of *developed length* of piping, the cleanout installed for the first change of direction shall serve as the cleanout for all changes in direction within that 40 feet (12 192 mm) of developed length of piping.

P3005.2.5 Cleanout size. Cleanouts shall be the same size as the piping served by the cleanout, except cleanouts for piping larger than 4 inches (102 mm) need not be larger than 4 inches (102 mm).

Exceptions:

1. Cleanouts located on stacks can be one size smaller than the stack size.
2. The size of cleanouts for cast-iron piping can be in accordance with the referenced standards for cast iron fittings as indicated in Table P3002.3.

P3005.2.6 Cleanout plugs. Cleanout plugs shall be copper alloy, plastic or other *approved* materials. Cleanout plugs for borosilicate glass piping systems shall be of borosilicate glass. Brass cleanout plugs shall conform to ASTM A74 and shall be limited for use only on metallic piping systems. Plastic cleanout plugs shall conform to the referenced standards for plastic pipe fittings as indicated in Table P3002.3. Cleanout plugs shall have a raised square head, a countersunk square head or a countersunk slot head. Where a cleanout plug will have a trim cover screw installed into the plug, the plug shall be manufactured with a blind end threaded hole for such purpose.

P3005.2.7 Manholes. Manholes and manhole covers shall be of an approved type. Manholes located inside of a building shall have gas-tight covers that require tools for removal.

P3005.2.8 Installation arrangement. The installation arrangement of a cleanout shall enable cleaning of drainage piping only in the direction of drainage flow.

Exceptions:

1. Test tees serving as cleanouts.
2. A two-way cleanout installation that is *approved* for meeting the requirements of Section P3005.2.3.

P3005.2.9 Required clearance. Cleanouts for 6-inch (153 mm) and smaller piping shall be provided with a clearance of not less than 18 inches (457 mm) from, and perpendicular to, the face of the opening to any obstruction. Cleanouts for 8-inch (203 mm) and larger piping shall be provided with a clearance of not less than 36 inches (914 mm) from, and perpendicular to, the face of the opening to any obstruction.

P3005.2.10 Cleanout access. Required cleanouts shall not be installed in concealed locations. For the purposes of this section, concealed locations include, but are not limited to, the inside of plenums, within walls, within floor/ceiling assemblies, below grade and in crawl spaces where the height from the crawl space floor to the nearest obstruction along the path from the crawl space opening to the cleanout location is less than 24 inches (610 mm). Cleanouts with openings at a finished wall shall have the face of the opening located within $1^1/_2$ inches (38 mm) of the finished wall surface. Cleanouts located below grade shall be extended to grade level so that the top of the cleanout plug is at or above grade. A cleanout installed in a floor or walkway that will not have a trim cover installed shall have a counter-sunk plug installed so the top surface of the plug is flush with the finished surface of the floor or walkway.

P3005.2.10.1 Cleanout plug trim covers. Trim covers and access doors for cleanout plugs shall be designed for such purposes. Trim cover fasteners that thread into cleanout plugs shall be corrosion resistant. Cleanout plugs shall not be covered with mortar, plaster or any other permanent material.

P3005.2.10.2 Floor cleanout assemblies. Where it is necessary to protect a cleanout plug from the loads of vehicular traffic, cleanout assemblies in accordance with ASME A112.36.2M shall be installed.

P3005.2.11 Prohibited use. The use of a threaded cleanout opening to add a fixture or extend piping shall be prohibited except where another cleanout of equal size is installed with the required access and clearance.

P3005.3 Horizontal drainage piping slope. Horizontal drainage piping shall be installed in uniform alignment at uniform slopes not less than $^1/_4$ unit vertical in 12 units horizontal (2-percent slope) for $2^1/_2$ inch (64 mm) diameter and less, and not less than $^1/_8$ unit vertical in 12 units horizontal (1-percent slope) for diameters of 3 inches (76 mm) or more.

P3005.4 Drain pipe sizing. Drain pipes shall be sized according to drainage fixture unit (d.f.u.) loads. The size of the drainage piping shall not be reduced in size in the direction of flow. The following general procedure is permitted to be used:

1. Draw an isometric layout or riser diagram denoting fixtures on the layout.
2. Assign d.f.u. values to each fixture group plus individual fixtures using Table P3004.1.
3. Starting with the top floor or most remote fixtures, work downstream toward the *building drain* accumulating d.f.u. values for fixture groups plus individual fixtures for each branch. Where multiple bath groups are being added, use the reduced d.f.u. values in Table P3004.1, which take into account probability factors of simultaneous use.
4. Size branches and stacks by equating the assigned d.f.u. values to pipe sizes shown in Table P3005.4.1.
5. Determine the pipe diameter and slope of the *building drain* and *building sewer* based on the accumulated d.f.u. values, using Table P3005.4.2.

P3005.4.1 Branch and stack sizing. Branches and stacks shall be sized in accordance with Table P3005.4.1. Below grade drain pipes shall be not less than $1^1/_2$ inches (38 mm) in diameter. Drain stacks shall be not smaller than the largest horizontal branch connected.

Exceptions:

1. A 4-inch by 3-inch (102 mm by 76 mm) closet bend or flange.
2. A 4-inch (102 mm) closet bend connected to a 3-inch (76 mm) stack tee shall not be prohibited.

TABLE P3005.4.1
MAXIMUM FIXTURE UNITS ALLOWED TO BE CONNECTED TO BRANCHES AND STACKS

NOMINAL PIPE SIZE (inches)	ANY HORIZONTAL FIXTURE BRANCH	ANY ONE VERTICAL STACK OR DRAIN
$1^1/_4$ [a]	—	—
$1^1/_2$ [b]	3	4
2 [b]	6	10
$2^1/_2$ [b]	12	20
3	20	48
4	160	240

For SI: 1 inch = 25.4 mm.

a. $1^1/_4$-inch pipe size limited to a single-fixture drain or trap arm. See Table P3201.7.

b. No water closets.

P3005.4.2 Building drain and sewer size and slope. Pipe sizes and slope shall be determined from Table P3005.4.2 on the basis of drainage load in fixture units (d.f.u.) computed from Table P3004.1.

TABLE P3005.4.2
MAXIMUM NUMBER OF FIXTURE UNITS ALLOWED TO BE CONNECTED TO THE BUILDING DRAIN, BUILDING DRAIN BRANCHES OR THE BUILDING SEWER

DIAMETER OF PIPE (inches)	SLOPE PER FOOT		
	$^1/_8$ inch	$^1/_4$ inch	$^1/_2$ inch
$1^1/_2$ [a, b]	—	Note a	Note a
2 [b]	—	21	27
$2^1/_2$ [b]	—	24	31
3	36	42	50
4	180	216	250

For SI: 1 inch = 25.4 mm, 1 foot = 304.8 mm.

a. $1^1/_2$-inch pipe size limited to a building drain branch serving not more than two waste fixtures, or not more than one waste fixture if serving a pumped discharge fixture or food waste disposer discharge.

b. No water closets.

P3005.5 Connections to offsets and bases of stacks. Horizontal branches shall connect to the bases of stacks at a point located not less than 10 times the diameter of the drainage stack downstream from the stack. Horizontal branches shall connect to horizontal stack offsets at a point located not less than 10 times the diameter of the drainage stack downstream from the upper stack.

SECTION P3006
SIZING OF DRAIN PIPE OFFSETS

P3006.1 Vertical offsets. An offset in a vertical drain, with a change of direction of 45 degrees (0.79 rad) or less from the vertical, shall be sized as a straight vertical drain.

P3006.2 Horizontal offsets above the lowest branch. A stack with an offset of more than 45 degrees (0.79 rad) from the vertical shall be sized as follows:

1. The portion of the stack above the offset shall be sized as for a regular stack based on the total number of fixture units above the offset.
2. The offset shall be sized as for a *building drain* in accordance with Table P3005.4.2.
3. The portion of the stack below the offset shall be sized as for the offset or based on the total number of fixture units on the entire stack, whichever is larger.

P3006.3 Horizontal offsets below the lowest branch. In soil or waste stacks below the lowest horizontal branch, a change in diameter shall not be required if the offset is made at an angle not greater than 45 degrees (0.79 rad) from the vertical. If an offset greater than 45 degrees (0.79 rad) from the vertical is made, the offset and stack below it shall be sized as a *building drain* (see Table P3005.4.2).

SECTION P3007
SUMPS AND EJECTORS

P3007.1 Building subdrains. Building subdrains that cannot be discharged to the sewer by gravity flow shall be discharged into a tightly covered and vented sump from which the liquid shall be lifted and discharged into the building gravity drainage system by automatic pumping equipment or other *approved* method. In other than existing structures, the sump shall not receive drainage from any piping within the building capable of being discharged by gravity to the *building sewer*.

P3007.2 Valves required. A check valve and a full open valve located on the discharge side of the check valve shall be installed in the pump or ejector discharge piping between the pump or ejector and the gravity drainage system. Access shall be provided to such valves. Such valves shall be located above the sump cover required by Section P3007.3.2 or, where the discharge pipe from the ejector is below grade, the valves shall be accessibly located outside the sump below grade in an access pit with a removable access cover.

P3007.3 Sump design. The sump pump, pit and discharge piping shall conform to the requirements of Sections P3007.3.1 through P3007.3.5.

P3007.3.1 Sump pump. The sump pump capacity and head shall be appropriate to anticipated use requirements.

P3007.3.2 Sump pit. The sump pit shall be not less than 18 inches (457 mm) in diameter and 24 inches (610 mm) deep, unless otherwise *approved*. The pit shall be accessible and located so that drainage flows into the pit by gravity. The sump pit shall be constructed of tile, concrete, steel, plastic or other *approved* materials. The pit bottom shall be solid and provide permanent support for the pump. The sump pit shall be fitted with a gas-tight removable cover that is installed above grade level or floor level, or not more than 2 inches (51 mm) below grade or floor level. The cover shall be adequate to support anticipated loads in the area of use. The sump pit shall be vented in accordance with Chapter 31.

P3007.3.3 Discharge pipe and fittings. Discharge pipe and fittings serving sump pumps and ejectors shall be constructed of materials in accordance with Sections P3007.3.3.1 and P3007.3.3.2 and shall be *approved*.

P3007.3.3.1 Materials. Pipe and fitting materials shall be constructed of copper alloy, copper, CPVC, ductile iron, PE, or PVC.

P3007.3.3.2 Ratings. Pipe and fittings shall be rated for the maximum system operating pressure and temperature. Pipe fitting materials shall be compatible with the pipe material. Where pipe and fittings are buried in the earth, they shall be suitable for burial.

P3007.3.4 Maximum effluent level. The effluent level control shall be adjusted and maintained to at all times prevent the effluent in the sump from rising to within 2 inches (51 mm) of the invert of the gravity drain inlet into the sump.

P3007.3.5 Ejector connection to the drainage system. Pumps connected to the drainage system shall connect to a *building sewer, building drain*, soil stack, waste stack or horizontal branch drain. Where the discharge line connects into horizontal drainage piping, the connection shall be made through a wye fitting into the top of the drainage piping and such wye fitting shall be located not less than 10 pipe diameters from the base of any soil stack, waste stack or fixture drain.

P3007.4 Sewage pumps and sewage ejectors. A sewage pump or sewage ejector shall automatically discharge the contents of the sump to the building drainage system.

P3007.5 Macerating toilet systems and pumped waste systems. Macerating toilet systems and pumped waste systems shall comply with ASME A112.3.4/CSA B45.9 and shall be installed in accordance with the manufacturer's instructions.

P3007.6 Capacity. Sewage pumps and sewage ejectors shall have the capacity and head for the application requirements. Pumps and ejectors that receive the discharge of water closets shall be capable of handling spherical solids with a diameter of up to and including 2 inches (51 mm). Other pumps or ejectors shall be capable of handling spherical solids with a diameter of up to and including 1 inch (25.4 mm). The minimum capacity of a pump or ejector based on the diameter of the discharge pipe shall be in accordance with Table 3007.6.

Exceptions:

1. Grinder pumps or grinder ejectors that receive the discharge of water closets shall have a discharge opening of not less than $1^1/_4$ inches (32 mm).
2. Macerating toilet assemblies that serve single water closets shall have a discharge opening of not less than $^3/_4$ inch (19 mm).

TABLE 3007.6
MINIMUM CAPACITY OF SEWAGE PUMP OR SEWAGE EJECTOR

DIAMETER OF THE DISCHARGE PIPE (inches)	CAPACITY OF PUMP OR EJECTOR (gpm)
2	21
$2^1/_2$	30
3	46

For SI: 1 inch = 25.4 mm, 1 gallon per minute = 3.785 L/m.

SECTION P3008
BACKWATER VALVES

P3008.1 Sewage backflow. Where the flood level rims of plumbing fixtures are below the elevation of the manhole cover of the next upstream manhole in the public sewer, the fixtures shall be protected by a backwater valve installed in the *building drain*, branch of the *building drain* or horizontal branch serving such fixtures. Plumbing fixtures having flood level rims above the elevation of the manhole cover of the next upstream manhole in the public sewer shall not discharge through a backwater valve.

Exception: In existing buildings, fixtures above the elevation of the manhole cover of the next upstream manhole in the *public sewer* shall not be prohibited from discharging through a backwater valve.

P3008.2 Material. Bearing parts of backwater valves shall be of corrosion-resistant material. Backwater valves shall comply with ASME A112.14.1, CSA B181.1 or CSA B181.2.

P3008.3 Seal. Backwater valves shall be constructed to provide a mechanical seal against backflow.

P3008.4 Diameter. Backwater valves, when fully opened, shall have a capacity not less than that of the pipes in which they are installed.

P3008.5 Location. Backwater valves shall be installed so that the working parts are accessible for service and repair.

SECTION P3009
SUBSURFACE LANDSCAPE IRRIGATION SYSTEMS

P3009.1 Scope. The provisions of this section shall govern the materials, design, construction and installation of subsurface landscape irrigation systems connected to nonpotable water from on-site water reuse systems.

P3009.2 Materials. Above-ground drain, waste and vent piping for subsurface landscape irrigation systems shall conform to one of the standards indicated in Table P3002.2(1). Subsurface landscape irrigation, underground building drainage and vent pipe shall conform to one of the standards indicated in Table P3002.1(2).

P3009.3 Tests. Drain, waste and vent piping for subsurface landscape irrigation systems shall be tested in accordance with Section P2503.

P3009.4 Inspections. Subsurface landscape irrigation systems shall be inspected in accordance with Section R109.

P3009.5 Disinfection. Disinfection shall not be required for on-site nonpotable reuse water for subsurface landscape irrigation systems.

P3009.6 Coloring. On-site nonpotable reuse water used for subsurface landscape irrigation systems shall not be required to be dyed.

P3009.7 Sizing. The system shall be sized in accordance with the sum of the output of all water sources connected to the subsurface irrigation system. Where gray-water collection piping is connected to subsurface landscape irrigation systems, gray-water output shall be calculated according to the gallons-per-day-per-occupant (liters per day per occupant) number based on the type of fixtures connected. The gray-water discharge shall be calculated by the following equation:

$$C = A \times B \qquad \textbf{(Equation 30-1)}$$

where:

A = Number of occupants:

Number of occupants shall be determined by the actual number of occupants, but not less than two occupants for one bedroom and one occupant for each additional bedroom.

B = Estimated flow demands for each occupant:

25 gallons (94.6 L) per day per occupant for showers, bathtubs and lavatories and 15 gallons (56.7 L) per day per occupant for clothes washers or laundry trays.

C = Estimated gray-water discharge based on the total number of occupants.

P3009.8 Percolation tests. The permeability of the soil in the proposed absorption system shall be determined by percolation tests or permeability evaluation.

P3009.8.1 Percolation tests and procedures. Not less than three percolation tests in each system area shall be conducted. The holes shall be spaced uniformly in relation to the bottom depth of the proposed absorption system. More percolation tests shall be made where necessary, depending on system design.

P3009.8.1.1 Percolation test hole. The test hole shall be dug or bored. The test hole shall have vertical sides and a horizontal dimension of 4 inches to 8 inches (102 mm to 203 mm). The bottom and sides of the hole shall be scratched with a sharp-pointed instrument to expose the natural soil. Loose material shall be removed from the hole and the bottom shall be covered with 2 inches (51 mm) of gravel or coarse sand.

P3009.8.1.2 Test procedure, sandy soils. The hole shall be filled with clear water to not less than 12 inches (305 mm) above the bottom of the hole for tests in sandy soils. The time for this amount of water to seep away shall be determined, and this procedure shall be repeated if the water from the second filling of the hole seeps away in 10 minutes or less. The test shall proceed as follows: Water shall be added to a point not more than 6 inches (152 mm) above the gravel or coarse sand. Thereupon, from a fixed reference point, water levels shall be measured at 10-minute intervals for a

period of 1 hour. Where 6 inches (152 mm) of water seeps away in less than 10 minutes, a shorter interval between measurements shall be used. The water depth shall not exceed 6 inches (152 mm). Where 6 inches (152 mm) of water seeps away in less than 2 minutes, the test shall be stopped and a rate of less than 3 minutes per inch (7.2 s/mm) shall be reported. The final water level drop shall be used to calculate the percolation rate. Soils not meeting these requirements shall be tested in accordance with Section P3009.8.1.3.

P3009.8.1.3 Test procedure, other soils. The hole shall be filled with clear water, and a minimum water depth of 12 inches (305 mm) shall be maintained above the bottom of the hole for a 4-hour period by refilling whenever necessary or by use of an automatic siphon. Water remaining in the hole after 4 hours shall not be removed. Thereafter, the soil shall be allowed to swell not less than 16 hours or more than 30 hours. Immediately after the soil swelling period, the measurements for determining the percolation rate shall be made as follows: any soil sloughed into the hole shall be removed and the water level shall be adjusted to 6 inches (152 mm) above the gravel or coarse sand. Thereupon, from a fixed reference point, the water level shall be measured at 30-minute intervals for a period of 4 hours, unless two successive water level drops do not vary by more than $^1/_{16}$ inch (1.59 mm). Not less than three water level drops shall be observed and recorded. The hole shall be filled with clear water to a point not more than 6 inches (152 mm) above the gravel or coarse sand whenever it becomes nearly empty. Adjustments of the water level shall not be made during the three measurement periods except to the limits of the last measured water level drop. When the first 6 inches (152 mm) of water seeps away in less than 30 minutes, the time interval between measurements shall be 10 minutes and the test run for 1 hour. The water depth shall not exceed 5 inches (127 mm) at any time during the measurement period. The drop that occurs during the final measurement period shall be used in calculating the percolation rate.

P3009.8.1.4 Mechanical test equipment. Mechanical percolation test equipment shall be of an *approved* type.

P3009.8.2 Permeability evaluation. Soil shall be evaluated for estimated percolation based on structure and texture in accordance with accepted soil evaluation practices. Borings shall be made in accordance with Section P3009.8.1.1 for evaluating the soil.

P3009.9 Subsurface landscape irrigation site location. The surface grade of soil absorption systems shall be located at a point lower than the surface grade of any water well or reservoir on the same or adjoining lot. Where this is not possible, the site shall be located so surface water drainage from the site is not directed toward a well or reservoir. The soil absorption system shall be located with a minimum horizontal distance between various elements as indicated in Table P3009.9. Private sewage disposal systems in compacted areas, such as parking lots and driveways, are prohibited. Surface water shall be diverted away from any soil absorption site on the same or neighboring lots.

TABLE P3009.9
LOCATION OF SUBSURFACE IRRIGATION SYSTEM

ELEMENT	MINIMUM HORIZONTAL DISTANCE	
	STORAGE TANK (feet)	IRRIGATION DISPOSAL FIELD (feet)
Buildings	5	2
Lot line adjoining private property	5	5
Water wells	50	100
Streams and lakes	50	50
Seepage pits	5	5
Septic tanks	0	5
Water service	5	5
Public water main	10	10

For SI: 1 foot = 304.8 mm.

P3009.10 Installation. Absorption systems shall be installed in accordance with Sections P3009.10.1 through P30091.10.5 to provide landscape irrigation without surfacing of water.

P3009.10.1 Absorption area. The total absorption area required shall be computed from the estimated daily gray-water discharge and the design-loading rate based on the percolation rate for the site. The required absorption area equals the estimated gray-water discharge divided by the design loading rate from Table P3009.10.1.

TABLE P3009.10.1
DESIGN LOADING RATE

PERCOLATION RATE (minutes per inch)	DESIGN LOADING FACTOR (gallons per square foot per day)
0 to less than 10	1.2
10 to less than 30	0.8
30 to less than 45	0.72
45 to 60	0.4

For SI: 1 minute per inch = min/25.4 mm,
1 gallon per square foot = 40.7 L/m^2.

P3009.10.2 Seepage trench excavations. Seepage trench excavations shall be not less than 1 foot (304 mm) in width and not greater than 5 feet (1524 mm) in width. Trench excavations shall be spaced not less than 2 feet (610 mm) apart. The soil absorption area of a seepage trench shall be computed by using the bottom of the trench area (width) multiplied by the length of pipe. Individual seepage trenches shall be not greater than 100 feet (30 480 mm) in developed length.

P3009.10.3 Seepage bed excavations. Seepage bed excavations shall be not less than 5 feet (1524 mm) in width and have more than one distribution pipe. The absorption area of a seepage bed shall be computed by using the bottom of the trench area. Distribution piping in a seepage bed shall be uniformly spaced not greater than 5 feet (1524

mm) and not less than 3 feet (914 mm) apart, and greater than 3 feet (914 mm) and not less than 1 foot (305 mm) from the sidewall or headwall.

P3009.10.4 Excavation and construction. The bottom of a trench or bed excavation shall be level. Seepage trenches or beds shall not be excavated where the soil is so wet that such material rolled between the hands forms a soil wire. Smeared or compacted soil surfaces in the sidewalls or bottom of seepage trench or bed excavations shall be scarified to the depth of smearing or compaction and the loose material removed. Where rain falls on an open excavation, the soil shall be left until sufficiently dry so a soil wire will not form when soil from the excavation bottom is rolled between the hands. The bottom area shall then be scarified and loose material removed.

P3009.10.5 Aggregate and backfill. Not less than 6 inches (150 mm) in depth of aggregate ranging in size from $^1/_2$ to $2^1/_2$ inches (12.7 mm to 64 mm) shall be laid into the trench below the distribution piping elevation. The aggregate shall be evenly distributed not less than 2 inches (51 mm) in depth over the top of the distribution pipe. The aggregate shall be covered with *approved* synthetic materials or 9 inches (229 mm) of uncompacted marsh hay or straw. Building paper shall not be used to cover the aggregate. Not less than 9 inches (229 mm) of soil backfill shall be provided above the covering.

P3009.11 Distribution piping. Distribution piping shall be not less than 3 inches (76 mm) in diameter. Materials shall comply with Table P3009.11. The top of the distribution pipe shall be not less than 8 inches (203 mm) below the original surface. The slope of the distribution pipes shall be not less than 2 inches (51 mm) and not greater than 4 inches (102 mm) per 100 feet (30 480 mm).

TABLE P3009.11
DISTRIBUTION PIPE

MATERIAL	STANDARD
Polyethylene (PE) plastic pipe	ASTM F 405
Polyvinyl chloride (PVC) plastic pipe	ASTM D 2729
Polyvinyl chloride (PVC) plastic pipe with a 3.5-inch O.D. and solid cellular core or composite wall	ASTM F 1488

For SI: 1 inch = 25.4 mm.

P3009.11.1 Joints. Joints in distribution pipe shall be made in accordance with Section P3003 of this code.

SECTION P3010
REPLACEMENT OF UNDERGROUND SEWERS BY PIPE BURSTING METHODS

P3010.1 General. This section shall govern the replacement of existing *building sewer* piping by pipe-bursting methods.

P3010.2 Applicability. The replacement of building sewer piping by pipe bursting methods shall be limited to gravity drainage piping of sizes 6 inches (150 mm) and smaller. The replacement piping shall be of the same nominal size as the existing piping.

P3010.3 Preinstallation inspection. The existing piping sections to be replaced shall be inspected internally by a recorded video camera survey. The survey shall include notations of the position of cleanouts and the depth of connections to the existing piping.

P3010.4 Pipe. The replacement pipe shall be made of a high-density polyethylene (HDPE) that conforms to cell classification number PE3608, PE4608 or PE4710 as indicated in ASTM F 714. The pipe fittings shall be manufactured with an SDR of 17 and in compliance with ASTM F 714.

P3010.5 Pipe fittings. Pipe fittings to be connected to the replacement piping shall be made of high-density polyethylene (HDPE) that conforms to cell classification number PE3608, PE4608 or PE4710 as indicated in ASTM F 714. The pipe fittings shall be manufactured with an SDR of 17 and in compliance with ASTM D 2683.

P3010.6 Cleanouts. Where the existing *building sewer* did not have cleanouts meeting the requirements of this code, cleanout fittings shall be installed as required by this code.

P3010.7 Post-installation inspection. The completed replacement piping section shall be inspected internally by a recorded video camera survey. The video survey shall be reviewed and *approved* by the building official prior to pressure testing of the replacement piping system.

P3010.8 Pressure testing. The replacement piping system and the connections to the replacement piping shall be tested in accordance with Section P2503.4.

CHAPTER 31

VENTS

User note: Code change proposals to this chapter will be considered by the IRC – Plumbing and Mechanical Code Development Committee during the 2015 (Group A) Code Development Cycle. See explanation on page xvii.

SECTION P3101
VENT SYSTEMS

P3101.1 General. This chapter shall govern the selection and installation of piping, tubing and fittings for vent systems. This chapter shall control the minimum diameter of vent pipes, circuit vents, branch vents and individual vents, and the size and length of vents and various aspects of vent stacks and stack vents. Additionally, this chapter regulates vent grades and connections, height above fixtures and relief vents for stacks and fixture traps, and the venting of sumps and sewers.

P3101.2 Trap seal protection. The plumbing system shall be provided with a system of vent piping that will allow the admission or emission of air so that the liquid seal of any fixture trap shall not be subjected to a pressure differential of more than 1 inch of water column (249 Pa).

P3101.2.1 Venting required. Every *trap* and trapped fixture shall be vented in accordance with one of the venting methods specified in this chapter.

P3101.3 Use limitations. The plumbing vent system shall not be used for purposes other than the venting of the plumbing system.

P3101.4 Extension outside a structure. In climates where the 97.5-percent value for outside design temperature is 0°F (-18°C) or less (ASHRAE 97.5-percent column, winter, see Chapter 3), vent pipes installed on the exterior of the structure shall be protected against freezing by insulation, heat or both. Vent terminals shall be protected from frost closure in accordance with Section P3103.2.

P3101.5 Flood resistance. In flood hazard areas as established by Table R301.2(1), vents shall be located at or above the elevation required in Section R322.1 (flood hazard areas including A Zones) or R322.2 (coastal high-hazard areas including V Zones).

SECTION P3102
VENT STACKS AND STACK VENTS

P3102.1 Required vent extension. The vent system serving each *building drain* shall have not less than one vent pipe that extends to the outdoors.

P3102.2 Installation. The required vent shall be a dry vent that connects to the *building drain* or an extension of a drain that connects to the *building drain*. Such vent shall not be an island fixture vent as permitted by Section P3112.

P3102.3 Size. The required vent shall be sized in accordance with Section P3113.1 based on the required size of the *building drain*.

SECTION P3103
VENT TERMINALS

P3103.1 Roof extension. Open vent pipes that extend through a roof shall be terminated not less than 6 inches (152 mm) above the roof or 6 inches (152 mm) above the anticipated snow accumulation, whichever is greater. Where a roof is to be used for assembly, as a promenade, observation deck or sunbathing deck or for similar purposes, open vent pipes shall terminate not less than 7 feet (2134 mm) above the roof.

P3103.2 Frost closure. Where the 97.5-percent value for outside design temperature is 0°F (-18°C) or less, vent extensions through a roof or wall shall be not less than 3 inches (76 mm) in diameter. Any increase in the size of the vent shall be made not less than 1 foot (304.8 mm) inside the thermal envelope of the building.

P3103.3 Flashings and sealing. The juncture of each vent pipe with the roof line shall be made water tight by an *approved* flashing. Vent extensions in walls and soffits shall be made weather tight by caulking.

P3103.4 Prohibited use. A vent terminal shall not be used for any purpose other than a vent terminal.

P3103.5 Location of vent terminal. An open vent terminal from a drainage system shall not be located less than 4 feet (1219 mm) directly beneath any door, openable window, or other air intake opening of the building or of an adjacent building, nor shall any such vent terminal be within 10 feet (3048 mm) horizontally of such an opening unless it is not less than 3 feet (914 mm) above the top of such opening.

P3103.6 Extension through the wall. Vent terminals extending through the wall shall terminate not less than 10 feet (3048 mm) from the *lot line* and 10 feet (3048 mm) above the highest adjacent *grade* within 10 feet (3048 mm) horizontally of the vent terminal. Vent terminals shall not terminate under the overhang of a structure with soffit vents. Side wall vent terminals shall be protected to prevent birds or rodents from entering or blocking the vent opening.

SECTION P3104
VENT CONNECTIONS AND GRADES

P3104.1 Connection. Individual branch and circuit vents shall connect to a vent stack, stack vent or extend to the open air.

Exception: Individual, branch and circuit vents shall be permitted to terminate at an *air admittance valve* in accordance with Section P3114.

P3104.2 Grade. Vent and branch vent pipes shall be graded, connected and supported to allow moisture and condensate to drain back to the soil or waste pipe by gravity.

P3104.3 Vent connection to drainage system. A dry vent connecting to a horizontal drain shall connect above the centerline of the horizontal drain pipe.

P3104.4 Vertical rise of vent. A dry vent shall rise vertically to not less than 6 inches (152 mm) above the flood level rim of the highest trap or trapped fixture being vented.

P3104.5 Height above fixtures. A connection between a vent pipe and a vent stack or stack vent shall be made not less than 6 inches (152 mm) above the flood level rim of the highest fixture served by the vent. Horizontal vent pipes forming branch vents shall be not less than 6 inches (152 mm) above the flood level rim of the highest fixture served.

P3104.6 Vent for future fixtures. Where the drainage piping has been roughed-in for future fixtures, a rough-in connection for a vent, not less than one-half the diameter of the drain, shall be installed. The vent rough-in shall connect to the vent system or shall be vented by other means as provided in this chapter. The connection shall be identified to indicate that the connection is a vent.

SECTION P3105
FIXTURE VENTS

P3105.1 Distance of trap from vent. Each fixture trap shall have a protecting vent located so that the slope and the *developed length* in the *fixture drain* from the trap weir to the vent fitting are within the requirements set forth in Table P3105.1.

Exception: The *developed length* of the *fixture drain* from the trap weir to the vent fitting for self-siphoning fixtures, such as water closets, shall not be limited.

TABLE P3105.1
MAXIMUM DISTANCE OF FIXTURE TRAP FROM VENT

SIZE OF TRAP (inches)	SLOPE (inch per foot)	DISTANCE FROM TRAP (feet)
$1^1/_4$	$^1/_4$	5
$1^1/_2$	$^1/_4$	6
2	$^1/_4$	8
3	$^1/_8$	12
4	$^1/_8$	16

For SI: 1 inch = 25.4 mm, 1 foot = 304.8 mm, 1 inch per foot = 83.3 mm/m.

P3105.2 Fixture drains. The total fall in a *fixture drain* resulting from pipe slope shall not exceed one pipe diameter, nor shall the vent pipe connection to a *fixture drain*, except for water closets, be below the weir of the trap.

P3105.3 Crown vent prohibited. A vent shall not be installed within two pipe diameters of the trap weir.

SECTION P3106
INDIVIDUAL VENT

P3106.1 Individual vent permitted. Each trap and trapped fixture shall be permitted to be provided with an individual vent. The individual vent shall connect to the *fixture drain* of the trap or trapped fixture being vented.

SECTION P3107
COMMON VENT

P3107.1 Individual vent as common vent. An individual vent shall be permitted to vent two traps or trapped fixtures as a common vent. The traps or trapped fixtures being common vented shall be located on the same floor level.

P3107.2 Connection at the same level. Where the *fixture drains* being common vented connect at the same level, the vent connection shall be at the interconnection of the *fixture drains* or downstream of the interconnection.

P3107.3 Connection at different levels. Where the *fixture drains* connect at different levels, the vent shall connect as a vertical extension of the vertical drain. The vertical drain pipe connecting the two *fixture drains* shall be considered the vent for the lower *fixture drain*, and shall be sized in accordance with Table P3107.3. The upper fixture shall not be a water closet.

TABLE P3107.3
COMMON VENT SIZES

PIPE SIZE (inches)	MAXIMUM DISCHARGE FROM UPPER FIXTURE DRAIN (d.f.u.)
$1^1/_2$	1
2	4
$2^1/_2$ to 3	6

For SI: 1 inch = 25.4 mm.

SECTION P3108
WET VENTING

P3108.1 Horizontal wet vent permitted. Any combination of fixtures within two *bathroom groups* located on the same floor level shall be permitted to be vented by a horizontal wet vent. The wet vent shall be considered the vent for the fixtures and shall extend from the connection of the dry vent along the direction of the flow in the drain pipe to the most downstream *fixture drain* connection. Each *fixture drain* shall connect horizontally to the horizontal branch being wet vented or shall have a dry vent. Each wet-vented *fixture drain* shall connect independently to the horizontal wet vent. Only the fixtures within the *bathroom groups* shall connect to the wet-vented horizontal branch drain. Any additional fixtures shall discharge downstream of the horizontal wet vent.

P3108.2 Dry vent connection. The required dry-vent connection for wet-vented systems shall comply with Sections P3108.2.1 and P3108.2.2.

P3108.2.1 Horizontal wet vent. The dry-vent connection for a horizontal wet-vent system shall be an individual vent or a common vent for any *bathroom group* fixture, except an emergency floor drain. Where the dry vent connects to a water closet *fixture drain*, the drain shall connect horizontally to the horizontal wet vent system. Not more than one wet-vented *fixture drain* shall discharge upstream of the dry-vented *fixture drain* connection.

P3108.2.2 Vertical wet vent. The dry-vent connection for a vertical wet-vent system shall be an individual vent or common vent for the most upstream *fixture drain*.

P3108.3 Size. Horizontal and vertical wet vents shall be not less than the size as specified in Table P3108.3, based on the fixture unit discharge to the wet vent. The dry vent serving the wet vent shall be sized based on the largest required diameter of pipe within the wet-vent system served by the dry vent.

TABLE P3108.3
WET VENT SIZE

WET VENT PIPE SIZE (inches)	FIXTURE UNIT LOAD (d.f.u.)
$1^1/_2$	1
2	4
$2^1/_2$	6
3	12
4	32

For SI: 1 inch = 25.4 mm.

P3108.4 Vertical wet vent permitted. A combination of fixtures located on the same floor level shall be permitted to be vented by a vertical wet vent. The vertical wet vent shall be considered the vent for the fixtures and shall extend from the connection of the dry vent down to the lowest *fixture drain* connection. Each wet-vented fixture shall connect independently to the vertical wet vent. All water closet drains shall connect at the same elevation. Other *fixture drains* shall connect above or at the same elevation as the water closet *fixture drains*. The dry vent connection to the vertical wet vent shall be an individual or common vent serving one or two fixtures.

P3108.5 Trap weir to wet vent distances. The maximum *developed length* of wet-vented *fixture drains* shall comply with Table P3105.1.

SECTION P3109
WASTE STACK VENT

P3109.1 Waste stack vent permitted. A waste stack shall be considered a vent for all of the fixtures discharging to the stack where installed in accordance with the requirements of this section.

P3109.2 Stack installation. The waste stack shall be vertical, and both horizontal and vertical offsets shall be prohibited between the lowest *fixture drain* connection and the highest *fixture drain* connection to the stack. Every *fixture drain* shall connect separately to the waste stack. The stack shall not receive the discharge of water closets or urinals.

P3109.3 Stack vent. A stack vent shall be installed for the waste stack. The size of the stack vent shall be not less than the size of the waste stack. Offsets shall be permitted in the stack vent and shall be located not less than 6 inches (152 mm) above the flood level of the highest fixture, and shall be in accordance with Section P3104.5. The stack vent shall be permitted to connect with other stack vents and vent stacks in accordance with Section P3113.3.

P3109.4 Waste stack size. The waste stack shall be sized based on the total discharge to the stack and the discharge within a *branch interval* in accordance with Table P3109.4. The waste stack shall be the same size throughout the length of the waste stack.

TABLE P3109.4
WASTE STACK VENT SIZE

STACK SIZE (inches)	MAXIMUM NUMBER OF FIXTURE UNITS (d.f.u.)	
	Total discharge into one branch interval	Total discharge for stack
$1^1/_2$	1	2
2	2	4
$2^1/_2$	No limit	8
3	No limit	24
4	No limit	50

For SI: 1 inch = 25.4 mm.

SECTION P3110
CIRCUIT VENTING

P3110.1 Circuit vent permitted. Not greater than eight fixtures connected to a horizontal branch drain shall be permitted to be circuit vented. Each *fixture drain* shall connect horizontally to the horizontal branch being circuit vented. The horizontal branch drain shall be classified as a vent from the most downstream *fixture drain* connection to the most upstream *fixture drain* connection to the horizontal branch.

P3110.2 Vent connection. The circuit vent connection shall be located between the two most upstream *fixture drains*. The vent shall connect to the horizontal branch and shall be installed in accordance with Section P3104. The circuit vent pipe shall not receive the discharge of any soil or waste.

P3110.3 Slope and size of horizontal branch. The slope of the vent section of the horizontal branch drain shall be not greater than one unit vertical in 12 units horizontal (8-percent slope). The entire length of the vent section of the horizontal branch drain shall be sized for the total drainage discharge to the branch in accordance with Table P3005.4.1.

P3110.4 Additional fixtures. Fixtures, other than the circuit vented fixtures shall be permitted to discharge, to the horizontal branch drain. Such fixtures shall be located on the same floor as the circuit vented fixtures and shall be either individually or common vented.

SECTION P3111
COMBINATION WASTE AND VENT SYSTEM

P3111.1 Type of fixtures. A combination waste and vent system shall not serve fixtures other than floor drains, sinks and lavatories. A combination waste and vent system shall not receive the discharge of a food waste disposer.

P3111.2 Installation. The only vertical pipe of a combination waste and vent system shall be the connection between the fixture drain and the horizontal combination waste and vent pipe. The vertical distance shall be not greater than 8 feet (2438 mm).

P3111.2.1 Slope. The horizontal combination waste and vent pipe shall have a slope of not greater than $^1/_2$ unit vertical in 12 units horizontal (4-percent slope). The minimum slope shall be in accordance with Section P3005.3.

P3111.2.2 Connection. The combination waste and vent system shall be provided with a dry vent connected at any point within the system or the system shall connect to a horizontal drain that serves vented fixtures located on the same floor. Combination waste and vent systems connecting to *building drains* receiving only the discharge from one or more stacks shall be provided with a dry vent. The vent connection to the combination waste and vent pipe shall extend vertically to a point not less than 6 inches (152 mm) above the flood level rim of the highest fixture being vented before offsetting horizontally.

P3111.2.3 Vent size. The vent shall be sized for the total fixture unit load in accordance with Section P3113.1.

P3111.2.4 Fixture branch or drain. The fixture branch or *fixture drain* shall connect to the combination waste and vent within a distance specified in Table P3105.1. The combination waste and vent pipe shall be considered the vent for the fixture.

P3111.3 Size. The size of a combination drain and vent pipe shall be not less than that specified in Table 3111.3. The horizontal length of a combination drain and vent system shall be unlimited.

TABLE P3111.3
SIZE OF COMBINATION WASTE AND VENT PIPE

DIAMETER PIPE (inches)	MAXIMUM NUMBER OF FIXTURE UNITS (d.f.u.)	
	Connecting to a horizontal branch or stack	Connecting to a building drain or building subdrain
2	3	4
$2^1/_2$	6	26
3	12	31
4	20	50

For SI: 1 inch = 25.4 mm.

SECTION P3112
ISLAND FIXTURE VENTING

P3112.1 Limitation. Island fixture venting shall not be permitted for fixtures other than sinks and lavatories. Kitchen sinks with a dishwasher waste connection, a food waste disposer, or both, in combination with the kitchen sink waste, shall be permitted to be vented in accordance with this section.

P3112.2 Vent connection. The island fixture vent shall connect to the *fixture drain* as required for an individual or common vent. The vent shall rise vertically to above the drainage outlet of the fixture being vented before offsetting horizontally or vertically downward. The vent or branch vent for multiple island fixture vents shall extend not less than 6 inches (152 mm) above the highest island fixture being vented before connecting to the outside vent terminal.

P3112.3 Vent installation below the fixture flood level rim. The vent located below the flood level rim of the fixture being vented shall be installed as required for drainage piping in accordance with Chapter 30, except for sizing. The vent shall be sized in accordance with Section P3113.1. The lowest point of the island fixture vent shall connect full size to the drainage system. The connection shall be to a vertical drain pipe or to the top half of a horizontal drain pipe. Cleanouts shall be provided in the island fixture vent to permit rodding of all vent piping located below the flood level rim of the fixtures. Rodding in both directions shall be permitted through a cleanout.

SECTION P3113
VENT PIPE SIZING

P3113.1 Size of vents. The required diameter of individual vents, branch vents, circuit vents, vent stacks and stack vents shall be not less than one-half the required diameter of the drain served. The required size of the drain shall be determined in accordance with Chapter 30. Vent pipes shall be not less than $1^1/_4$ inches (32 mm) in diameter. Vents exceeding 40 feet (12 192 mm) in *developed length* shall be increased by one nominal pipe size for the entire *developed length* of the vent pipe.

P3113.2 Developed length. The *developed length* of individual, branch, and circuit vents shall be measured from the farthest point of vent connection to the drainage system, to the point of connection to the vent stack, stack vent or termination outside of the building.

P3113.3 Branch vents. Where branch vents are connected to a common branch vent, the common branch vent shall be sized in accordance with this section, based on the size of the common horizontal drainage branch that is or would be required to serve the total drainage fixture unit (d.f.u.) load being vented.

P3113.4 Sump vents. Sump vent sizes shall be determined in accordance with Sections P3113.4.1 and P3113.4.2.

P3113.4.1 Sewage pumps and sewage ejectors other than pneumatic. Drainage piping below sewer level shall be vented in the same manner as that of a gravity system. Building sump vent sizes for sumps with sewage pumps or sewage ejectors, other than pneumatic, shall be determined in accordance with Table P3113.4.1.

P3113.4.2 Pneumatic sewage ejectors. The air pressure relief pipe from a pneumatic sewage ejector shall be connected to an independent vent stack terminating as required for vent extensions through the roof. The relief pipe shall be sized to relieve air pressure inside the ejector to atmospheric pressure, but shall be not less than $1^1/_4$ inches (32 mm) in size.

SECTION P3114
AIR ADMITTANCE VALVES

P3114.1 General. Vent systems using *air admittance valves* shall comply with this section. Individual and branch-type air admittance valves shall conform to ASSE 1051. Stack-type air admittance valves shall conform to ASSE 1050.

P3114.2 Installation. The valves shall be installed in accordance with the requirements of this section and the manufacturer's instructions. *Air admittance valves* shall be installed after the DWV testing required by Section P2503.5.1 or P2503.5.2 has been performed.

TABLE P3113.4.1
SIZE AND LENGTH OF SUMP VENTS

DISCHARGE CAPACITY OF PUMP (gpm)	MAXIMUM DEVELOPED LENGTH OF VENT (feet)[a]				
	Diameter of vent (inches)				
	$1^1/_4$	$1^1/_2$	2	$2^1/_2$	3
10	No limit[b]	No limit	No limit	No limit	No limit
20	270	No limit	No limit	No limit	No limit
40	72	160	No limit	No limit	No limit
60	31	75	270	No limit	No limit

For SI: 1 inch = 25.4 mm, 1 foot = 304.8 mm, 1 gallon per minute (gpm) = 3.785 L/m.

a. Developed length plus an appropriate allowance for entrance losses and friction caused by fittings, changes in direction and diameter. Suggested allowances shall be obtained from NBS Monograph 31 or other approved sources. An allowance of 50 percent of the developed length shall be assumed if a more precise value is not available.

b. Actual values greater than 500 feet.

P3114.3 Where permitted. Individual vents, branch vents, circuit vents and stack vents shall be permitted to terminate with a connection to an *air admittance valve*. Individual and branch type air admittance valves shall vent only fixtures that are on the same floor level and connect to a horizontal branch drain.

P3114.4 Location. Individual and branch *air admittance valves* shall be located not less than 4 inches (102 mm) above the horizontal branch drain or *fixture drain* being vented. Stack-type air admittance valves shall be located not less than 6 inches (152 mm) above the flood level rim of the highest fixture being vented. The *air admittance valve* shall be located within the maximum *developed length* permitted for the vent. The *air admittance valve* shall be installed not less than 6 inches (152 mm) above insulation materials where installed in *attics*.

P3114.5 Access and ventilation. Access shall be provided to *air admittance valves*. Such valves shall be installed in a location that allows air to enter the valve.

P3114.6 Size. The *air admittance valve* shall be rated for the size of the vent to which the valve is connected.

P3114.7 Vent required. Within each plumbing system, not less than one stack vent or a vent stack shall extend outdoors to the open air.

P3114.8 Prohibited installations. *Air admittance valves* shall not be used to vent sumps or tanks except where the vent system for the sump or tank has been designed by an engineer.

CHAPTER 32

TRAPS

User note: Code change proposals to this chapter will be considered by the IRC – Plumbing and Mechanical Code Development Committee during the 2015 (Group A) Code Development Cycle. See explanation on page xvii.

SECTION P3201
FIXTURE TRAPS

P3201.1 Design of traps. Traps shall be of standard design, shall have smooth uniform internal waterways, shall be self-cleaning and shall not have interior partitions except where integral with the fixture. Traps shall be constructed of lead, cast iron, copper or copper alloy or *approved* plastic. Copper or copper alloy traps shall be not less than No. 20 gage (0.8 mm) thickness. Solid connections, slip joints and couplings shall be permitted to be used on the trap inlet, trap outlet, or within the trap seal. Slip joints shall be accessible.

P3201.2 Trap seals. Each fixture trap shall have a liquid seal of not less than 2 inches (51 mm) and not more than 4 inches (102 mm).

P3201.2.1 Trap seal protection. Traps seals of emergency floor drain traps and traps subject to evaporation shall be protected by one of the methods in Sections P3201.2.1.1 through P3201.2.1.4.

P3201.2.1.1 Potable water-supplied trap seal primer valve. A potable water-supplied trap seal primer valve shall supply water to the trap. Water-supplied trap seal primer valves shall conform to ASSE 1018. The discharge pipe from the trap seal primer valve shall connect to the trap above the trap seal on the inlet side of the trap.

P3201.2.1.2 Reclaimed or gray-water-supplied trap seal primer valve. A reclaimed or gray-water-supplied trap seal primer valve shall supply water to the trap. Water-supplied trap seal primer valves shall conform to ASSE 1018. The quality of reclaimed or gray water supplied to trap seal primer valves shall be in accordance with the requirements of the manufacturer of the trap seal primer valve. The discharge pipe from the trap seal primer valve shall connect to the trap above the trap seal on the inlet side of the trap.

P3201.2.1.3 Waste-water-supplied trap primer device. A waste-water-supplied trap primer device shall supply water to the trap. Waste-water-supplied trap primer devices shall conform to ASSE 1044. The discharge pipe from the trap seal primer device shall connect to the trap above the trap seal on the inlet side of the trap.

P3201.2.1.4 Barrier-type trap seal protection device. A barrier-type trap seal protection device shall protect the floor drain trap seal from evaporation. Barrier-type floor drain trap seal protection devices shall conform to ASSE 1072. The devices shall be installed in accordance with the manufacturer's instructions.

P3201.3 Trap setting and protection. Traps shall be set level with respect to their water seals and shall be protected from freezing. Trap seals shall be protected from siphonage, aspiration or back pressure by an *approved* system of venting (see Section P3101).

P3201.4 Building traps. Building traps shall be prohibited.

P3201.5 Prohibited trap designs. The following types of traps are prohibited:

1. Bell traps.
2. Separate fixture traps with interior partitions, except those lavatory traps made of plastic, stainless steel or other corrosion-resistant material.
3. "S" traps.
4. Drum traps.
5. Trap designs with moving parts.

P3201.6 Number of fixtures per trap. Each plumbing fixture shall be separately trapped by a water seal trap. The vertical distance from the fixture outlet to the trap weir shall not exceed 24 inches (610 mm) and the horizontal distance shall not exceed 30 inches (762 mm) measured from the center line of the fixture outlet to the centerline of the inlet of the trap. The height of a clothes washer standpipe above a trap shall conform to Section P2706.1.2. Fixtures shall not be double trapped.

Exceptions:

1. Fixtures that have integral traps.
2. A single trap shall be permitted to serve two or three like fixtures limited to kitchen sinks, laundry tubs and lavatories. Such fixtures shall be adjacent to each other and located in the same room with a continuous waste arrangement. The trap shall be installed at the center fixture where three fixtures are installed. Common trapped fixture outlets shall be not more than 30 inches (762 mm) apart.
3. Connection of a laundry tray waste line into a standpipe for the automatic clothes-washer drain shall be permitted in accordance with Section P2706.1.2.1.

P3201.7 Size of fixture traps. Trap sizes for plumbing fixtures shall be as indicated in Table P3201.7. Where the tailpiece of a plumbing fixture is larger than that indicated in Table P3201.7, the trap size shall be the same nominal size as the fixture tailpiece. A trap shall not be larger than the drainage pipe into which the trap discharges.

TABLE P3201.7
SIZE OF TRAPS FOR PLUMBING FIXTURES

PLUMBING FIXTURE	TRAP SIZE MINIMUM (inches)
Bathtub (with or without shower head and/or whirlpool attachments)	$1^1/_2$
Bidet	$1^1/_4$
Clothes washer standpipe	2
Dishwasher (on separate trap)	$1^1/_2$
Floor drain	2
Kitchen sink (one or two traps, with or without dishwasher and food waste disposer)	$1^1/_2$
Laundry tub (one or more compartments)	$1^1/_2$
Lavatory	$1^1/_4$
Shower (based on the total flow rate through showerheads and bodysprays) Flow rate: 5.7 gpm and less More than 5.7 gpm up to 12.3 gpm More than 12.3 gpm up to 25.8 gpm More than 25.8 gpm up to 55.6 gpm	 $1^1/_2$ 2 3 4

For SI: 1 inch = 25.4 mm.

CHAPTER 33

STORM DRAINAGE

User note: Code change proposals to this chapter will be considered by the IRC – Plumbing and Mechanical Code Development Committee during the 2015 (Group A) Code Development Cycle. See explanation on page xvii.

SECTION P3301
GENERAL

P3301.1 Scope. The provisions of this chapter shall govern the materials, design, construction and installation of storm drainage.

SECTION P3302
SUBSOIL DRAINS

P3302.1 Subsoil drains. Subsoil drains shall be open-jointed, horizontally split or perforated pipe conforming to one of the standards listed in Table P3302.1. Such drains shall be not less than 4 inches (102 mm) in diameter. Where the building is subject to backwater, the subsoil drain shall be protected by an accessibly located backwater valve. Subsoil drains shall discharge to a trapped area drain, sump, dry well or *approved* location above ground. The subsoil sump shall not be required to have either a gas-tight cover or a vent. The sump and pumping system shall comply with Section P3303.

SECTION P3303
SUMPS AND PUMPING SYSTEMS

P3303.1 Pumping system. The sump pump, pit and discharge piping shall conform to Sections P3303.1.1 through P3303.1.4.

P3303.1.1 Pump capacity and head. The sump pump shall be of a capacity and head appropriate to anticipated use requirements.

P3303.1.2 Sump pit. The sump pit shall be not less than 18 inches (457 mm) in diameter and 24 inches (610 mm) deep, unless otherwise *approved*. The pit shall be accessible and located so that all drainage flows into the pit by gravity. The sump pit shall be constructed of tile, steel, plastic, cast-iron, concrete or other *approved* material, with a removable cover adequate to support anticipated loads in the area of use. The pit floor shall be solid and provide permanent support for the pump.

P3303.1.3 Electrical. Electrical outlets shall meet the requirements of Chapters 34 through 43.

P3303.1.4 Piping. Discharge piping shall meet the requirements of Sections P3002.1, P3002.2, P3002.3 and P3003. Discharge piping shall include an accessible full flow check valve. Pipe and fittings shall be the same size as, or larger than, the pump discharge tapping.

TABLE P3302.1
SUBSOIL DRAIN PIPE

MATERIAL	STANDARD
Cast-iron pipe	ASTM A 74; ASTM A 888; CISPI 301
Polyethylene (PE) plastic pipe	ASTM F 405; CSA B182.1; CSA B182.6; CSA B182.8
Polyvinyl chloride (PVC) Plastic pipe (type sewer pipe, SDR 35, PS25, PS50 or PS100)	ASTM D 2729; ASTM D3034; ASTM F 891; CSA B182.2; CSA B182.4
Stainless steel drainage systems, Type 316L	ASME A112.3.1
Vitrified clay pipe	ASTM C 4; ASTM C 700

Part VIII—Electrical

CHAPTER 34

GENERAL REQUIREMENTS

This Electrical Part (Chapters 34 through 43) is produced and copyrighted by the National Fire Protection Association (NFPA) and is based on the 2014 *National Electrical Code*® (NEC®) (NFPA 70®-2014), copyright 2013, National Fire Protection Association, all rights reserved. Use of the Electrical Part is pursuant to license with the NFPA.

The title *National Electrical Code*®, the acronym NEC® and the document number NFPA 70® are registered trademarks of the National Fire Protection Association, Quincy, Massachusetts. The section numbers appearing in parentheses or brackets after IRC text are the section numbers of the corresponding text in the *National Electrical Code* (NFPA 70).

IMPORTANT NOTICE AND DISCLAIMER CONCERNING THE NEC AND THIS ELECTRICAL PART.

This Electrical Part is a compilation of provisions extracted from the 2014 edition of the NEC. The NEC, like all NFPA codes and standards, is developed through a consensus standards development process approved by the American National Standards Institute. This process brings together volunteers representing varied viewpoints and interests to achieve consensus on fire and other safety issues. While the NFPA administers the process and establishes rules to promote fairness in the development of consensus, it does not independently test, evaluate or verify the accuracy of any information or the soundness of any judgments contained in its codes and standards.

The NFPA disclaims liability for any personal injury, property or other damages of any nature whatsoever, whether special, indirect, consequential or compensatory, directly or indirectly resulting from the publication, use of, or reliance on the NEC or this Electrical Part. The NFPA also makes no guaranty or warranty as to the accuracy or completeness of any information published in these documents.

In issuing and making the NEC and this Electrical Part available, the NFPA is not undertaking to render professional or other services for or on behalf of any person or entity. Nor is the NFPA undertaking to perform any duty owed by any person or entity to someone else. Anyone using these documents should rely on his or her own independent judgment or, as appropriate, seek the advice of a competent professional in determining the exercise of reasonable care in any given circumstances.

The NFPA has no power, nor does it undertake, to police or enforce compliance with the contents of the NEC and this Electrical Part. Nor does the NFPA list, certify, test, or inspect products, designs, or installations for compliance with these documents. Any certification or other statement of compliance with the requirements of these documents shall not be attributable to the NFPA and is solely the responsibility of the certifier or maker of the statement.

For additional notices and disclaimers concerning NFPA codes and standards see www.nfpa.org/disclaimers.

SECTION E3401
GENERAL

E3401.1 Applicability. The provisions of Chapters 34 through 43 shall establish the general scope of the electrical system and equipment requirements of this code. Chapters 34 through 43 cover those wiring methods and materials most commonly encountered in the construction of one- and two-family dwellings and structures regulated by this code. Other wiring methods, materials and subject matter covered in NFPA 70 are also allowed by this code.

E3401.2 Scope. Chapters 34 through 43 shall cover the installation of electrical systems, equipment and components indoors and outdoors that are within the scope of this code, including services, power distribution systems, fixtures, appliances, devices and appurtenances. Services within the scope of this code shall be limited to 120/240-volt, 0- to 400-ampere, single-phase systems. These chapters specifically cover the equipment, fixtures, appliances, wiring methods and materials that are most commonly used in the construction or alteration of one- and two-family dwellings and accessory structures regulated by this code. The omission from these chapters of any material or method of construction provided for in the referenced standard NFPA 70 shall not be construed as prohibiting the use of such material or method of construction. Electrical systems, equipment or components not specifically covered in these chapters shall comply with the applicable provisions of NFPA 70.

E3401.3 Not covered. Chapters 34 through 43 do not cover the following:

1. Installations, including associated lighting, under the exclusive control of communications utilities and electric utilities.
2. Services over 400 amperes.

E3401.4 Additions and alterations. Any addition or alteration to an existing electrical system shall be made in conformity to the provisions of Chapters 34 through 43. Where additions subject portions of existing systems to loads exceeding those permitted herein, such portions shall be made to comply with Chapters 34 through 43.

SECTION E3402
BUILDING STRUCTURE PROTECTION

E3402.1 Drilling and notching. Wood-framed structural members shall not be drilled, notched or altered in any manner except as provided for in this code.

E3402.2 Penetrations of fire-resistance-rated assemblies. Electrical installations in hollow spaces, vertical shafts and ventilation or air-handling ducts shall be made so that the possible spread of fire or products of combustion will not be substantially increased. Electrical penetrations into or through fire-resistance-rated walls, partitions, floors or ceilings shall be protected by approved methods to maintain the fire-resistance rating of the element penetrated. Penetrations of fire-resistance-rated walls shall be limited as specified in Section R317.3. (300.21)

E3402.3 Penetrations of firestops and draftstops. Penetrations through fire blocking and draftstopping shall be protected in an approved manner to maintain the integrity of the element penetrated.

SECTION E3403
INSPECTION AND APPROVAL

E3403.1 Approval. Electrical materials, components and equipment shall be approved. (110.2)

E3403.2 Inspection required. New electrical work and parts of existing systems affected by new work or alterations shall be inspected by the building official to ensure compliance with the requirements of Chapters 34 through 43.

E3403.3 Listing and labeling. Electrical materials, components, devices, fixtures and equipment shall be listed for the application, shall bear the label of an approved agency and shall be installed, and used, or both, in accordance with the manufacturer's installation instructions. [110.3(B)]

SECTION E3404
GENERAL EQUIPMENT REQUIREMENTS

E3404.1 Voltages. Throughout Chapters 34 through 43, the voltage considered shall be that at which the circuit operates. (110.4)

E3404.2 Interrupting rating. Equipment intended to interrupt current at fault levels shall have a minimum interrupting rating of 10,000 amperes. Equipment intended to interrupt current at levels other than fault levels shall have an interrupting rating at nominal circuit voltage of not less than the current that must be interrupted. (110.9)

E3404.3 Circuit characteristics. The overcurrent protective devices, total impedance, equipment short-circuit current ratings and other characteristics of the circuit to be protected shall be so selected and coordinated as to permit the circuit protective devices that are used to clear a fault to do so without extensive damage to the electrical equipment of the circuit. This fault shall be assumed to be either between two or more of the circuit conductors or between any circuit conductor and the equipment grounding conductors permitted in Section E3908.8. Listed equipment applied in accordance with its listing shall be considered to meet the requirements of this section. (110.10)

E3404.4 Enclosure types. Enclosures, other than surrounding fences or walls, of panelboards, meter sockets, enclosed switches, transfer switches, circuit breakers, pullout switches and motor controllers, rated not over 600 volts nominal and intended for such locations, shall be marked with an enclosure-type number as shown in Table E3404.4.

Table E3404.4 shall be used for selecting these enclosures for use in specific locations other than hazardous (classified) locations. The enclosures are not intended to protect against conditions such as condensation, icing, corrosion, or contamination that might occur within the enclosure or enter through the conduit or unsealed openings. (110.28)

E3404.5 Protection of equipment. Equipment not identified for outdoor use and equipment identified only for indoor use, such as "dry locations," "indoor use only" "damp locations," or enclosure Type 1, 2, 5, 12, 12K and/or 13, shall be protected against damage from the weather during construction. (110.11)

E3404.6 Unused openings. Unused openings, other than those intended for the operation of equipment, those intended for mounting purposes, and those permitted as part of the design for listed equipment, shall be closed to afford protection substantially equivalent to the wall of the equipment. Where metallic plugs or plates are used with nonmetallic enclosures they shall be recessed at least $^1/_4$ inch (6.4 mm) from the outer surface of the enclosure. [110.12(A)]

E3404.7 Integrity of electrical equipment. Internal parts of electrical equipment, including busbars, wiring terminals, insulators and other surfaces, shall not be damaged or contaminated by foreign materials such as paint, plaster, cleaners or abrasives, and corrosive residues. There shall not be any damaged parts that might adversely affect safe operation or mechanical strength of the equipment such as parts that are broken; bent; cut; deteriorated by corrosion, chemical action, or overheating. Foreign debris shall be removed from equipment. [110.12(B)]

E3404.8 Mounting. Electrical equipment shall be firmly secured to the surface on which it is mounted. Wooden plugs driven into masonry, concrete, plaster, or similar materials shall not be used. [110.13(A)]

E3404.9 Energized parts guarded against accidental contact. Approved enclosures shall guard energized parts that are operating at 50 volts or more against accidental contact. [110.27(A)]

E3404.10 Prevent physical damage. In locations where electrical equipment is likely to be exposed to physical damage, enclosures or guards shall be so arranged and of such strength as to prevent such damage. [110.27(B)]

E3404.11 Equipment identification. The manufacturer's name, trademark or other descriptive marking by which the organization responsible for the product can be identified shall be placed on all electric equipment. Other markings shall be provided that indicate voltage, current, wattage or other ratings as specified elsewhere in Chapters 34 through

43. The marking shall have the durability to withstand the environment involved. [110.21(A)]

E3404.12 Field-applied hazard markings. Where caution, warning, or danger signs or labels are required by this code, the labels shall meet the following requirements:

1. The marking shall adequately warn of the hazard using effective words, colors, or symbols or combinations of such.
2. Labels shall be permanently affixed to the equipment or wiring method.
3. Labels shall not be hand written except for portions of labels or markings that are variable, or that could be subject to changes. Labels shall be legible.
4. Labels shall be of sufficient durability to withstand the environment involved. [110.21(B)]

E3404.13 Identification of disconnecting means. Each disconnecting means shall be legibly marked to indicate its purpose, except where located and arranged so that the purpose is evident. The marking shall have the durability to withstand the environment involved. [110.22(A)]

TABLE E3404.4 (Table 110.28)
ENCLOSURE SELECTION

PROVIDES A DEGREE OF PROTECTION AGAINST THE FOLLOWING ENVIRONMENTAL CONDITIONS	FOR OUTDOOR USE									
	Enclosure-type Number									
	3	3R	3S	3X	3RX	3SX	4	4X	6	6P
Incidental contact with the enclosed equipment	X	X	X	X	X	X	X	X	X	X
Rain, snow and sleet	X	X	X	X	X	X	X	X	X	X
Sleet[a]	—	—	X	—	—	X	—	—	—	—
Windblown dust	X	—	X	X	—	X	X	X	X	X
Hosedown	—	—	—	—	—	—	X	X	X	X
Corrosive agents	—	—	—	X	X	X	—	X	—	X
Temporary submersion	—	—	—	—	—	—	—	—	X	X
Prolonged submersion	—	—	—	—	—	—	—	—	—	X
PROVIDES A DEGREE OF PROTECTION AGAINST THE FOLLOWING ENVIRONMENTAL CONDITIONS	**FOR INDOOR USE**									
	Enclosure-type Number									
	1	2	4	4X	5	6	6P	12	12K	13
Incidental contact with the enclosed equipment	X	X	X	X	X	X	X	X	X	X
Falling dirt	X	X	X	X	X	X	X	X	X	X
Falling liquids and light splashing	—	X	X	X	X	X	X	X	X	X
Circulating dust, lint, fibers and flyings	—	—	X	X	—	X	X	X	X	X
Settling airborne dust, lint, fibers and flings	—	—	X	X	X	X	X	X	X	X
Hosedown and splashing water	—	—	X	X	—	X	X	—	—	—
Oil and coolant seepage	—	—	—	—	—	—	—	X	X	X
Oil or coolant spraying and splashing	—	—	—	—	—	—	—	—	—	X
Corrosive agents	—	—	—	X	—	—	X	—	—	—
Temporary submersion	—	—	—	—	—	X	X	—	—	—
Prolonged submersion	—	—	—	—	—	—	X	—	—	—

a. Mechanism shall be operable when ice covered.

Note 1: The term raintight is typically used in conjunction with Enclosure Types 3, 3S, 3SX, 3X, 4, 4X, 6 and 6P. The term rainproof is typically used in conjunction with Enclosure Types 3R and 3RX. The term watertight is typically used in conjunction with Enclosure Types 4, 4X, 6 and 6P. The term driptight is typically used in conjunction with Enclosure Types 2, 5, 12, 12K and 13. The term dusttight is typically used in conjunction with Enclosure Types 3, 3S, 3SX, 3X, 5, 12, 12K and 13.

Note 2: Ingress protection (IP) ratings are found in ANSI/NEMA 60529, *Degrees of Protection Provided by Enclosures*. IP ratings are not a substitute for enclosure-type ratings.

SECTION E3405
EQUIPMENT LOCATION AND CLEARANCES

E3405.1 Working space and clearances. Access and working space shall be provided and maintained around all electrical equipment to permit ready and safe operation and maintenance of such equipment in accordance with this section and Figure E3405.1. (110.26)

E3405.2 Working clearances for energized equipment and panelboards. Except as otherwise specified in Chapters 34 through 43, the dimension of the working space in the direction of access to panelboards and live parts of other equipment likely to require examination, adjustment, servicing or maintenance while energized shall be not less than 36 inches (914 mm) in depth. Distances shall be measured from the energized parts where such parts are exposed or from the enclosure front or opening where such parts are enclosed. In addition to the 36-inch dimension (914 mm), the work space shall not be less than 30 inches (762 mm) wide in front of the electrical equipment and not less than the width of such equipment. The work space shall be clear and shall extend from the floor or platform to a height of 6.5 feet (1981 mm) or the height of the equipment, whichever is greater. In all cases, the work space shall allow at least a 90-degree (1.57 rad) opening of equipment doors or hinged panels. Equipment associated with the electrical installation located above or below the electrical equipment shall be permitted to extend not more than 6 inches (152 mm) beyond the front of the electrical equipment. [110.26(A) (1), (2), (3)]

Exceptions:

1. In existing dwelling units, service equipment and panelboards that are not rated in excess of 200 amperes shall be permitted in spaces where the height of the working space is less than 6.5 feet (1981 mm). [110.26(A)(3) Exception No. 1]
2. Meters that are installed in meter sockets shall be permitted to extend beyond the other equipment. Meter sockets shall not be exempt from the requirements of this section. [110.26(A)(3) Exception No. 2]

E3405.3 Indoor dedicated panelboard space. The indoor space equal to the width and depth of the panelboard and extending from the floor to a height of 6 feet (1829 mm) above the panelboard, or to the structural ceiling, whichever is lower, shall be dedicated to the electrical installation. Piping, ducts, leak protection apparatus and other equipment foreign to the electrical installation shall not be installed in such dedicated space. The area above the dedicated space shall be permitted to contain foreign systems, provided that protection is installed to avoid damage to the electrical equipment from condensation, leaks and breaks in such foreign systems (see Figure E3405.1).

Exception: Suspended ceilings with removable panels shall be permitted within the 6-foot (1829 mm) dedicated space.

E3405.4 Outdoor dedicated panelboard space. The outdoor space equal to the width and depth of the panelboard, and extending from grade to a height of 6 feet (1.8 m) above the panelboard, shall be dedicated to the electrical installation. Piping and other equipment foreign to the electrical installation shall not be located in this zone.

E3405.5 Location of working spaces and equipment. Required working space shall not be designated for storage. Panelboards and overcurrent protection devices shall not be located in clothes closets, in bathrooms, or over the steps of a stairway. [110.26(B), 240.24(D), (E), (F)]

E3405.6 Access and entrance to working space. Access shall be provided to the required working space. [110.26(C)(1)]

E3405.7 Illumination. Artificial illumination shall be provided for all working spaces for service equipment and panelboards installed indoors and shall not be controlled by automatic means only. Additional lighting outlets shall not be required where the work space is illuminated by an adjacent light source or as permitted by Exception 1 of Section E3903.2 for switched receptacles. [110.26(D)]

SECTION E3406
ELECTRICAL CONDUCTORS AND CONNECTIONS

E3406.1 General. This section provides general requirements for conductors, connections and splices. These requirements do not apply to conductors that form an integral part of equipment, such as motors, appliances and similar equipment, or to conductors specifically provided for elsewhere in Chapters 34 through 43. (310.1)

E3406.2 Conductor material. Conductors used to conduct current shall be of copper except as otherwise provided in Chapters 34 through 43. Where the conductor material is not specified, the material and the sizes given in these chapters shall apply to copper conductors. Where other materials are used, the conductor sizes shall be changed accordingly. (110.5)

E3406.3 Minimum size of conductors. The minimum size of conductors for feeders and branch circuits shall be 14 AWG copper and 12 AWG aluminum. The minimum size of service conductors shall be as specified in Chapter 36. The minimum size of Class 2 remote control, signaling and power-limited circuits conductors shall be as specified in Chapter 43. [310.106(A)]

E3406.4 Stranded conductors. Where installed in raceways, conductors 8 AWG and larger shall be stranded. A solid 8 AWG conductor shall be permitted to be installed in a raceway only to meet the requirements of Sections E3610.2 and E4204. [310.106(C)]

E3406.5 Individual conductor insulation. Except where otherwise permitted in Sections E3605.1 and E3908.9, and E4303, current-carrying conductors shall be insulated. Insulated conductors shall have insulation types identified as RHH, RHW, RHW-2, THHN, THHW, THW, THW-2, THWN, THWN-2, TW, UF, USE, USE-2, XHHW or XHHW-2. Insulation types shall be approved for the application. [310.106(C), 310.104]

E3406.6 Conductors in parallel. Circuit conductors that are connected in parallel shall be limited to sizes 1/0 AWG and larger. Conductors in parallel shall: be of the same length; consist of the same conductor material; be the same circular mil area and have the same insulation type. Conductors in parallel shall be terminated in the same manner. Where run in separate raceways or cables, the raceway or cables shall have the same physical characteristics. Where conductors are in separate raceways or cables, the same number of conductors shall be used in each raceway or cable. [310.10(H)]

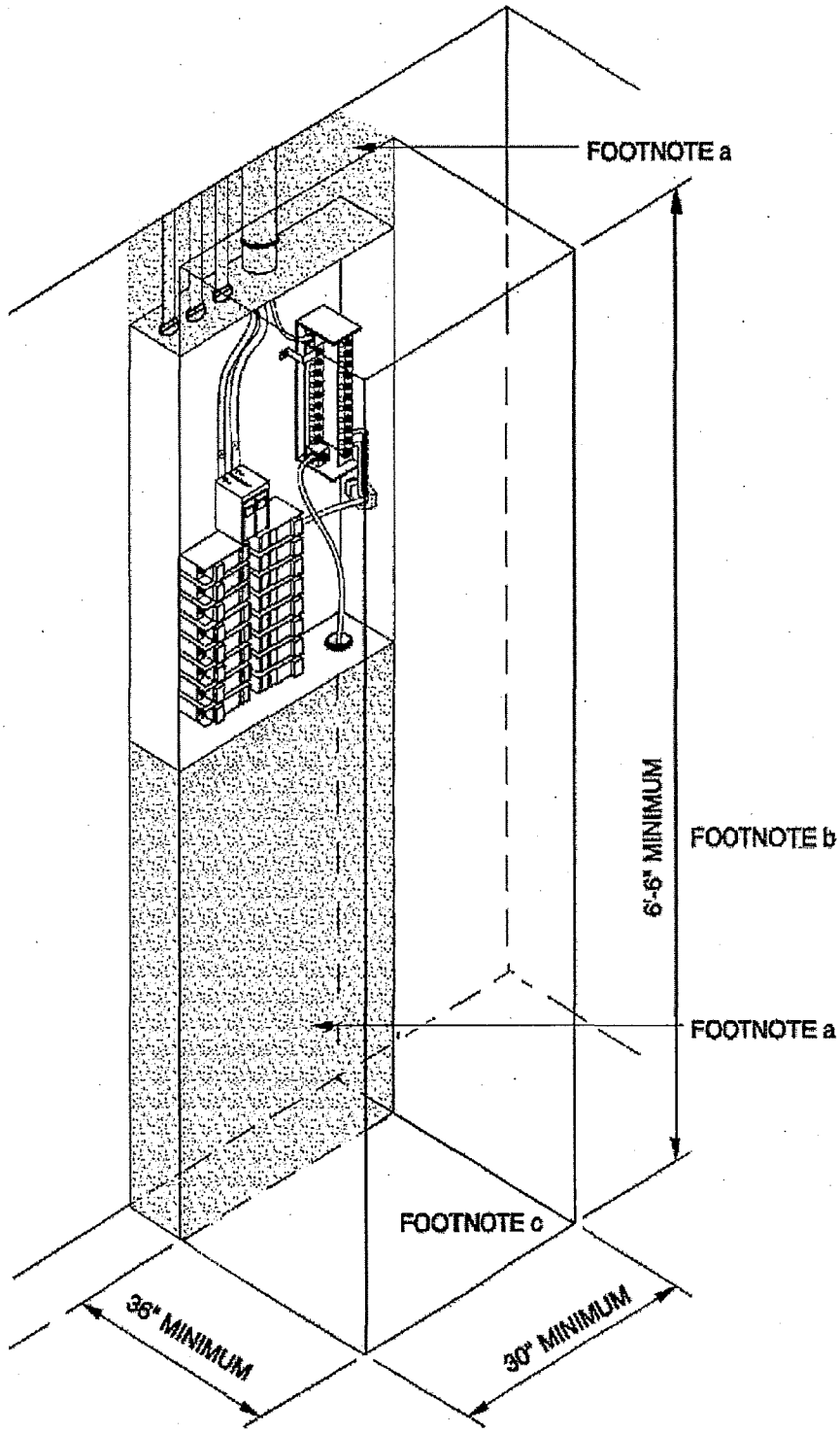

For SI: 1 inch = 25.4 mm, 1 foot = 304.8 mm.

a. Equipment, piping and ducts foreign to the electrical installation shall not be placed in the shaded areas extending from the floor to a height of 6 feet above the panelboard enclosure, or to the structural ceiling, whichever is lower.

b. The working space shall be clear and unobstructed from the floor to a height of 6.5 feet or the height of the equipment, whichever is greater.

c. The working space shall not be designated for storage.

d. Panelboards, service equipment and similar enclosures shall not be located in bathrooms, toilet rooms, clothes closets or over the steps of a stairway.

e. Such work spaces shall be provided with artificial lighting where located indoors and shall not be controlled by automatic means only.

FIGURE E3405.1[a, b, c, d, e]
WORKING SPACE AND CLEARANCES

3127

E3406.7 Conductors of the same circuit. All conductors of the same circuit and, where used, the grounded conductor and all equipment grounding conductors and bonding conductors shall be contained within the same raceway, cable or cord. [300.3(B)]

E3406.8 Aluminum and copper connections. Terminals and splicing connectors shall be identified for the material of the conductors joined. Conductors of dissimilar metals shall not be joined in a terminal or splicing connector where physical contact occurs between dissimilar conductors such as copper and aluminum, copper and copper-clad aluminum, or aluminum and copper-clad aluminum, except where the device is listed for the purpose and conditions of application. Materials such as inhibitors and compounds shall be suitable for the application and shall be of a type that will not adversely affect the conductors, installation or equipment. (110.14)

E3406.9 Fine stranded conductors. Connectors and terminals for conductors that are more finely stranded than Class B and Class C stranding as shown in Table E3406.9, shall be identified for the specific conductor class or classes. (110.14)

E3406.10 Terminals. Connection of conductors to terminal parts shall be made without damaging the conductors and shall be made by means of pressure connectors, including set-screw type, by means of splices to flexible leads, or for conductor sizes of 10 AWG and smaller, by means of wire binding screws or studs and nuts having upturned lugs or the equivalent. Terminals for more than one conductor and terminals for connecting aluminum conductors shall be identified for the application. [110.14(A)]

E3406.11 Splices. Conductors shall be spliced or joined with splicing devices listed for the purpose. Splices and joints and the free ends of conductors shall be covered with an insulation equivalent to that of the conductors or with an insulating device listed for the purpose. Wire connectors or splicing means installed on conductors for direct burial shall be listed for such use. [110.14(B)]

E3406.11.1 Continuity. Conductors in raceways shall be continuous between outlets, boxes, and devices and shall be without splices or taps in the raceway.

Exception: Splices shall be permitted within surface-mounted raceways that have a removable cover. [300.13(A)]

E3406.11.2 Device connections. The continuity of a grounded conductor in multiwire branch circuits shall not be dependent on connection to devices such as receptacles and lampholders. The arrangement of grounding connections shall be such that the disconnection or the removal of a receptacle, luminaire or other device fed from the box does not interfere with or interrupt the grounding continuity. [300.13(B)]

E3406.11.3 Length of conductor for splice or termination. Where conductors are to be spliced, terminated or connected to fixtures or devices, a minimum length of 6 inches (152 mm) of free conductor shall be provided at each outlet, junction or switch point. The required length shall be measured from the point in the box where the conductor emerges from its raceway or cable sheath. Where the opening to an outlet, junction or switch point is less than 8 inches (200 mm) in any dimension, each conductor shall be long enough to extend at least 3 inches (75 mm) outside of such opening. (300.14)

E3406.12 Grounded conductor continuity. The continuity of a grounded conductor shall not depend on connection to a metallic enclosure, raceway or cable armor. [200.2(B)]

TABLE E3406.9 (Chapter 9, Table 10)
CONDUCTOR STRANDING[c]

CONDUCTOR SIZE		NUMBER OF STRANDS		
		Copper		Aluminum
AWG or kcmil	mm²	Class B	Class C	Class B
24-30	0.20-0.05	a	—	—
22	0.32	7	—	—
20	0.52	10	—	—
18	0.82	16	—	—
16	1.3	26	—	—
14-2	2.1-33.6	7	19	7[b]
1-4/0	42.4-107	19	37	19
250-500	127-253	37	61	37
600-1000	304-508	61	91	61
1250-1500	635-759	91	127	91
1750-2000	886-1016	127	271	127

a. Number of strands vary.

b. Aluminum 14 AWG (2.1 mm²) is not available.

c. With the permission of Underwriters Laboratories, Inc., this material is reproduced from UL Standard 486A-B, Wire Connectors, which is copyrighted by Underwriters Laboratories, Inc., Northbrook, Illinois. While use of this material has been authorized, UL shall not be responsible for the manner in which the information is presented, nor for any interpretations thereof.

E3406.13 Connection of grounding and bonding equipment. The connection of equipment grounding conductors, grounding electrode conductors and bonding jumpers shall be in accordance with Sections E3406.13.1 and E3406.13.2.

E3406.13.1 Permitted methods. Equipment grounding conductors, grounding electrode conductors, and bonding jumpers shall be connected by one or more of the following means:

1. Listed pressure connectors.
2. Terminal bars.
3. Pressure connectors listed as grounding and bonding equipment.
4. Exothermic welding process.
5. Machine screw-type fasteners that engage not less than two threads or are secured with a nut.
6. Thread-forming machine screws that engage not less than two threads in the enclosure.
7. Connections that are part of a listed assembly.
8. Other listed means. [250.8 (A)]

E3406.13.2 Methods not permitted. Connection devices or fittings that depend solely on solder shall not be used. [250.8 (B)]

SECTION E3407
CONDUCTOR AND TERMINAL IDENTIFICATION

E3407.1 Grounded conductors. Insulated grounded conductors of sizes 6 AWG or smaller shall be identified by a continuous white or gray outer finish or by three continuous white or gray stripes on other than green insulation along the entire length of the conductors. Conductors of sizes 4 AWG or larger shall be identified either by a continuous white or gray outer finish or by three continuous white or gray stripes on other than green insulation along its entire length or at the time of installation by a distinctive white or gray marking at its terminations. This marking shall encircle the conductor or insulation. [200.6(A) & (B)]

E3407.2 Equipment grounding conductors. Equipment grounding conductors of sizes 6 AWG and smaller shall be identified by a continuous green color or a continuous green color with one or more yellow stripes on the insulation or covering, except where bare. Conductors with insulation or individual covering that is green, green with one or more yellow stripes, or otherwise identified as permitted by this section shall not be used for ungrounded or grounded circuit conductors. (250.119)

Equipment grounding conductors 4 AWG and larger AWG that are not identified as required for conductors of sizes 6 AWG and smaller shall, at the time of installation, be permanently identified as an equipment grounding conductor at each end and at every point where the conductor is accessible, except where such conductors are bare.

The required identification for conductors 4 AWG and larger shall encircle the conductor and shall be accomplished by one of the following:

1. Stripping the insulation or covering from the entire exposed length.
2. Coloring the exposed insulation or covering green at the termination.
3. Marking the exposed insulation or covering with green tape or green adhesive labels at the termination. [250.119(A)]

Exceptions:

1. Conductors 4 AWG and larger shall not be required to be identified in conduit bodies that do not contain splices or unused hubs. [250.119(A)(1) Exception]
2. Power-limited, Class 2 or Class 3 circuit cables containing only circuits operating at less than 50 volts shall be permitted to use a conductor with green insulation for other than equipment grounding purposes. [250.119 Exception No. 1]

E3407.3 Ungrounded conductors. Insulation on the ungrounded conductors shall be a continuous color other than white, gray and green. [310.110(C)]

Exception: An insulated conductor that is part of a cable or flexible cord assembly and that has a white or gray finish or a finish marking with three continuous white or gray stripes shall be permitted to be used as an ungrounded conductor where it is permanently reidentified to indicate its use as an ungrounded conductor by marking tape, painting, or other effective means at all terminations and at each location where the conductor is visible and accessible. Identification shall encircle the insulation and shall be a color other than white, gray, and green. [200.7(C)(1)]

Where used for single-pole, 3-way or 4-way switch loops, the reidentified conductor with white or gray insulation or three continuous white or gray stripes shall be used only for the supply to the switch, not as a return conductor from the switch to the outlet. [200.7(C)(2)]

E3407.4 Identification of terminals. Terminals for attachment to conductors shall be identified in accordance with Sections E3407.4.1 and E3407.4.2.

E3407.4.1 Device terminals. All devices excluding panelboards, provided with terminals for the attachment of conductors and intended for connection to more than one side of the circuit shall have terminals properly marked for identification, except where the terminal intended to be connected to the grounded conductor is clearly evident. [200.10(A)]

Exception: Terminal identification shall not be required for devices that have a normal current rating of over 30 amperes, other than polarized attachment caps and polarized receptacles for attachment caps as required in Section E3407.4.2. [200.10(A) Exception]

E3407.4.2 Receptacles, plugs and connectors. Receptacles, polarized attachment plugs and cord connectors for plugs and polarized plugs shall have the terminal intended for connection to the grounded (white) conductor identified. Identification shall be by a metal or metal coating substantially white in color or by the word "white" or the letter "W" located adjacent to the identified terminal. Where the terminal is not visible, the conductor entrance hole for the connection shall be colored white or marked with the word "white" or the letter "W." [200.10(B)]

CHAPTER 35

ELECTRICAL DEFINITIONS

SECTION E3501
GENERAL

E3501.1 Scope. This chapter contains definitions that shall apply only to the electrical requirements of Chapters 34 through 43. Unless otherwise expressly stated, the following terms shall, for the purpose of this code, have the meanings indicated in this chapter. Words used in the present tense include the future; the singular number includes the plural and the plural the singular. Where terms are not defined in this section and are defined in Section R202 of this code, such terms shall have the meanings ascribed to them in that section. Where terms are not defined in these sections, they shall have their ordinarily accepted meanings or such as the context implies.

ACCESSIBLE. (As applied to equipment.) Admitting close approach; not guarded by locked doors, elevation or other effective means.

ACCESSIBLE. (As applied to wiring methods.) Capable of being removed or exposed without damaging the building structure or finish, or not permanently closed in by the structure or finish of the building.

ACCESSIBLE, READILY. Capable of being reached quickly for operation, renewal or inspections, without requiring those to whom ready access is requisite to take actions such as to use tools, to climb over or remove obstacles or to resort to portable ladders, etc.

AMPACITY. The maximum current in amperes that a conductor can carry continuously under the conditions of use without exceeding its temperature rating.

APPLIANCE. Utilization equipment, normally built in standardized sizes or types, that is installed or connected as a unit to perform one or more functions such as clothes washing, air conditioning, food mixing, deep frying, etc.

APPROVED. Acceptable to the authority having jurisdiction.

ARC-FAULT CIRCUIT INTERRUPTER. A device intended to provide protection from the effects of arc-faults by recognizing characteristics unique to arcing and by functioning to de-energize the circuit when an arc-fault is detected.

ATTACHMENT PLUG (PLUG CAP) (PLUG). A device that, by insertion into a receptacle, establishes connection between the conductors of the attached flexible cord and the conductors connected permanently to the receptacle.

AUTOMATIC. Performing a function without the necessity of human intervention.

BATHROOM. An area, including a basin, with one or more of the following: a toilet, a urinal, a tub, a shower, a bidet, or similar plumbing fixture.

BONDED (BONDING). Connected to establish electrical continuity and conductivity.

BONDING CONDUCTOR OR JUMPER. A reliable conductor to ensure the required electrical conductivity between metal parts required to be electrically connected.

BONDING JUMPER (EQUIPMENT). The connection between two or more portions of the equipment grounding conductor.

BONDING JUMPER, MAIN. The connection between the grounded circuit conductor and the equipment grounding conductor at the service.

BONDING JUMPER, SUPPLY-SIDE. A conductor installed on the supply side of a service or within a service equipment enclosure(s) that ensures the required electrical conductivity between metal parts required to be electrically connected.

BRANCH CIRCUIT. The circuit conductors between the final overcurrent device protecting the circuit and the outlet(s).

BRANCH CIRCUIT, APPLIANCE. A branch circuit that supplies energy to one or more outlets to which appliances are to be connected, and that has no permanently connected luminaires that are not a part of an appliance.

BRANCH CIRCUIT, GENERAL PURPOSE. A branch circuit that supplies two or more receptacle outlets or outlets for lighting and appliances.

BRANCH CIRCUIT, INDIVIDUAL. A branch circuit that supplies only one utilization equipment.

BRANCH CIRCUIT, MULTIWIRE. A branch circuit consisting of two or more ungrounded conductors having voltage difference between them, and a grounded conductor having equal voltage difference between it and each ungrounded conductor of the circuit, and that is connected to the neutral or grounded conductor of the system.

CABINET. An enclosure designed either for surface or flush mounting and provided with a frame, mat or trim in which a swinging door or doors are or may be hung.

CIRCUIT BREAKER. A device designed to open and close a circuit by nonautomatic means and to open the circuit automatically on a predetermined overcurrent without damage to itself when properly applied within its rating.

CLOTHES CLOSET. A nonhabitable room or space intended primarily for storage of garments and apparel.

CONCEALED. Rendered inaccessible by the structure or finish of the building.

CONDUCTOR

Bare. A conductor having no covering or electrical insulation whatsoever.

Covered. A conductor encased within material of composition or thickness that is not recognized by this code as electrical insulation.

Insulated. A conductor encased within material of composition and thickness that is recognized by this code as electrical insulation.

CONDUIT BODY. A separate portion of a conduit or tubing system that provides access through a removable cover(s) to the interior of the system at a junction of two or more sections of the system or at a terminal point of the system. Boxes such as FS and FD or larger cast or sheet metal boxes are not classified as conduit bodies.

CONNECTOR, PRESSURE (SOLDERLESS). A device that establishes a connection between two or more conductors or between one or more conductors and a terminal by means of mechanical pressure and without the use of solder.

CONTINUOUS LOAD. A load where the maximum current is expected to continue for 3 hours or more.

COOKING UNIT, COUNTER-MOUNTED. A cooking appliance designed for mounting in or on a counter and consisting of one or more heating elements, internal wiring and built-in or separately mountable controls.

COPPER-CLAD ALUMINUM CONDUCTORS. Conductors drawn from a copper-clad aluminum rod with the copper metallurgically bonded to an aluminum core. The copper forms a minimum of 10 percent of the cross-sectional area of a solid conductor or each strand of a stranded conductor.

CUTOUT BOX. An enclosure designed for surface mounting and having swinging doors or covers secured directly to and telescoping with the walls of the box proper (see "Cabinet").

DEAD FRONT. Without live parts exposed to a person on the operating side of the equipment.

DEMAND FACTOR. The ratio of the maximum demand of a system, or part of a system, to the total connected load of a system or the part of the system under consideration.

DEVICE. A unit of an electrical system that carries or controls electrical energy as it principal function.

DISCONNECTING MEANS. A device, or group of devices, or other means by which the conductors of a circuit can be disconnected from their source of supply.

DWELLING

Dwelling unit. A single unit, providing complete and independent living facilities for one or more persons, including permanent provisions for living, sleeping, cooking and sanitation.

One-family dwelling. A building consisting solely of one dwelling unit.

Two-family dwelling. A building consisting solely of two dwelling units.

EFFECTIVE GROUND-FAULT CURRENT PATH. An intentionally constructed, low-impedance electrically conductive path designed and intended to carry current under ground-fault conditions from the point of a ground fault on a wiring system to the electrical supply source and that facilitates the operation of the overcurrent protective device or ground-fault detectors.

ENCLOSED. Surrounded by a case, housing, fence or walls that will prevent persons from accidentally contacting energized parts.

ENCLOSURE. The case or housing of apparatus, or the fence or walls surrounding an installation, to prevent personnel from accidentally contacting energized parts or to protect the equipment from physical damage.

ENERGIZED. Electrically connected to, or is, a source of voltage.

EQUIPMENT. A general term including material, fittings, devices, appliances, luminaires, apparatus, machinery and the like used as a part of, or in connection with, an electrical installation.

EXPOSED. (As applied to live parts.) Capable of being inadvertently touched or approached nearer than a safe distance by a person.

EXPOSED. (As applied to wiring methods.) On or attached to the surface or behind panels designed to allow access.

EXTERNALLY OPERABLE. Capable of being operated without exposing the operator to contact with live parts.

FEEDER. All circuit conductors between the service equipment, or the source of a separately derived system, or other power supply source and the final branch-circuit overcurrent device.

FITTING. An accessory such as a locknut, bushing or other part of a wiring system that is intended primarily to perform a mechanical rather than an electrical function.

GROUND. The earth.

GROUNDED (GROUNDING). Connected (connecting) to ground or to a conductive body that extends the ground connection.

GROUNDED, EFFECTIVELY. Intentionally connected to earth through a ground connection or connections of sufficiently low impedance and having sufficient current-carrying capacity to prevent the buildup of voltages that may result in undue hazards to connected equipment or to persons.

GROUNDED CONDUCTOR. A system or circuit conductor that is intentionally grounded.

GROUNDING CONDUCTOR, EQUIPMENT (EGC). The conductive path(s) that provides a ground-fault current path and connects normally noncurrent-carrying metal parts of equipment together and, to the system grounded conductor, the grounding electrode conductor or both.

GROUNDING ELECTRODE. A conducting object through which a direct connection to earth is established.

GROUNDING ELECTRODE CONDUCTOR. A conductor used to connect the system grounded conductor or the equipment to a grounding electrode or to a point on the grounding electrode system.

GROUND-FAULT CIRCUIT-INTERRUPTER. A device intended for the protection of personnel that functions to de-

energize a circuit or portion thereof within an established period of time when a current to ground exceeds the value for a Class A device.

GROUND-FAULT CURRENT PATH. An electrically conductive path from the point of a ground fault on a wiring system through normally non-current-carrying conductors, equipment, or the earth to the electrical supply source.

Examples of ground-fault current paths are any combination of equipment grounding conductors, metallic raceways, metallic cable sheaths, electrical equipment, and any other electrically conductive material such as metal, water, and gas piping; steel framing members; stucco mesh; metal ducting; reinforcing steel; shields of communications cables; and the earth itself.

GUARDED. Covered, shielded, fenced, enclosed or otherwise protected by means of suitable covers, casings, barriers, rails, screens, mats or platforms to remove the likelihood of approach or contact by persons or objects to a point of danger.

IDENTIFIED. (As applied to equipment.) Recognizable as suitable for the specific purpose, function, use, environment, application, etc., where described in a particular code requirement.

INTERRUPTING RATING. The highest current at rated voltage that a device is identified to interrupt under standard test conditions.

INTERSYSTEM BONDING TERMINATION. A device that provides a means for connecting intersystem bonding conductors for communications systems to the grounding electrode system.

ISOLATED. (As applied to location.) Not readily accessible to persons unless special means for access are used.

KITCHEN. An area with a sink and permanent provisions for food preparation and cooking.

LABELED. Equipment or materials to which has been attached a label, symbol or other identifying mark of an organization acceptable to the authority having jurisdiction and concerned with product evaluation that maintains periodic inspection of production of labeled equipment or materials and by whose labeling the manufacturer indicates compliance with appropriate standards or performance in a specified manner.

LIGHTING OUTLET. An outlet intended for the direct connection of a lampholder or luminaire.

LIGHTING TRACK (Track Lighting). A manufactured assembly designed to support and energize luminaires that are capable of being readily repositioned on the track. Its length can be altered by the addition or subtraction of sections of track.

LISTED. Equipment, materials or services included in a list published by an organization that is acceptable to the authority having jurisdiction and concerned with evaluation of products or services, that maintains periodic inspection of production of listed equipment or materials or periodic evaluation of services, and whose listing states either that the equipment, material or services meets identified standards or has been tested and found suitable for a specified purpose.

LIVE PARTS. Energized conductive components.

LOCATION, DAMP. Location protected from weather and not subject to saturation with water or other liquids but subject to moderate degrees of moisture.

LOCATION, DRY. A location not normally subject to dampness or wetness. A location classified as dry may be temporarily subject to dampness or wetness, as in the case of a building under construction.

LOCATION, WET. Installations underground or in concrete slabs or masonry in direct contact with the earth and locations subject to saturation with water or other liquids, such as vehicle-washing areas, and locations exposed to weather.

LUMINAIRE. A complete lighting unit consisting of a light source such as a lamp or lamps together with the parts designed to position the light source and connect it to the power supply. A luminaire can include parts to protect the light source or the ballast or to distribute the light. A lampholder itself is not a luminaire.

MULTIOUTLET ASSEMBLY. A type of surface, or flush, or freestanding raceway; designed to hold conductors and receptacles, assembled in the field or at the factory.

NEUTRAL CONDUCTOR. The conductor connected to the neutral point of a system that is intended to carry current under normal conditions.

NEUTRAL POINT. The common point on a wye-connection in a polyphase system or midpoint on a single-phase, 3-wire system, or midpoint of a single-phase portion of a 3-phase delta system, or a midpoint of a 3-wire, direct-current system.

OUTLET. A point on the wiring system at which current is taken to supply utilization equipment.

OVERCURRENT. Any current in excess of the rated current of equipment or the ampacity of a conductor. Such current might result from overload, short circuit or ground fault.

OVERLOAD. Operation of equipment in excess of normal, full-load rating, or of a conductor in excess of rated ampacity that, when it persists for a sufficient length of time, would cause damage or dangerous overheating. A fault, such as a short circuit or ground fault, is not an overload.

PANELBOARD. A single panel or group of panel units designed for assembly in the form of a single panel, including buses and automatic overcurrent devices, and equipped with or without switches for the control of light, heat or power circuits, designed to be placed in a cabinet or cutout box placed in or against a wall, partition or other support and accessible only from the front.

PLENUM. A compartment or chamber to which one or more air ducts are connected and that forms part of the air distribution system.

POWER OUTLET. An enclosed assembly that may include receptacles, circuit breakers, fuseholders, fused switches, buses and watt-hour meter mounting means, intended to sup-

ply and control power to mobile homes, recreational vehicles or boats, or to serve as a means for distributing power required to operate mobile or temporarily installed equipment.

PREMISES WIRING (SYSTEM). Interior and exterior wiring, including power, lighting, control and signal circuit wiring together with all of their associated hardware, fittings and wiring devices, both permanently and temporarily installed. This includes wiring from the service point or power source to the outlets and wiring from and including the power source to the outlets where there is no service point. Such wiring does not include wiring internal to appliances, luminaires, motors, controllers, and similar equipment.

QUALIFIED PERSON. One who has the skills and knowledge related to the construction and operation of the electrical equipment and installations and has received safety training to recognize and avoid the hazards involved.

RACEWAY. An enclosed channel of metallic or nonmetallic materials designed expressly for holding wires, cables, or busbars, with additional functions as permitted in this code.

RAINPROOF. Constructed, protected or treated so as to prevent rain from interfering with the successful operation of the apparatus under specified test conditions.

RAIN TIGHT. Constructed or protected so that exposure to a beating rain will not result in the entrance of water under specified test conditions.

RECEPTACLE. A receptacle is a contact device installed at the outlet for the connection of an attachment plug. A single receptacle is a single contact device with no other contact device on the same yoke. A multiple receptacle is two or more contact devices on the same yoke.

RECEPTACLE OUTLET. An outlet where one or more receptacles are installed.

SERVICE. The conductors and equipment for delivering energy from the serving utility to the wiring system of the premises served.

SERVICE CABLE. Service conductors made up in the form of a cable.

SERVICE CONDUCTORS. The conductors from the service point to the service disconnecting means.

SERVICE CONDUCTORS, OVERHEAD. The overhead conductors between the service point and the first point of connection to the service-entrance conductors at the building or other structure.

SERVICE CONDUCTORS, UNDERGROUND. The underground conductors between the service point and the first point of connection to the service-entrance conductors in a terminal box, meter, or other enclosure, inside or outside of the building wall.

SERVICE DROP. The overhead service conductors between the utility electric supply system and the service point.

SERVICE-ENTRANCE CONDUCTORS, OVERHEAD SYSTEM. The service conductors between the terminals of the service equipment and a point usually outside of the building, clear of building walls, where joined by tap or splice to the service drop or overhead service conductors.

SERVICE-ENTRANCE CONDUCTORS, UNDERGROUND SYSTEM. The service conductors between the terminals of the service equipment and the point of connection to the service lateral or underground service conductors.

SERVICE EQUIPMENT. The necessary equipment, usually consisting of a circuit breaker(s) or switch(es) and fuse(s), and their accessories, connected to the load end of the service conductors to a building or other structure, or an otherwise designated area, and intended to constitute the main control and cutoff of the supply.

SERVICE LATERAL. The underground service conductors between the electric utility supply system and the service point.

SERVICE POINT. The point of connection between the facilities of the serving utility and the premises wiring.

STRUCTURE. That which is built or constructed.

SWITCHES

General-use switch. A switch intended for use in general distribution and branch circuits. It is rated in amperes and is capable of interrupting its rated current at its rated voltage.

General-use snap switch. A form of general-use switch constructed so that it can be installed in device boxes or on box covers or otherwise used in conjunction with wiring systems recognized by this code.

Isolating switch. A switch intended for isolating an electric circuit from the source of power. It has no interrupting rating and is intended to be operated only after the circuit has been opened by some other means.

Motor-circuit switch. A switch, rated in horsepower that is capable of interrupting the maximum operating overload current of a motor of the same horsepower rating as the switch at the rated voltage.

UNGROUNDED. Not connected to ground or to a conductive body that extends the ground connection.

UTILIZATION EQUIPMENT. Equipment that utilizes electric energy for electronic, electromechanical, chemical, heating, lighting or similar purposes.

VENTILATED. Provided with a means to permit circulation of air sufficient to remove an excess of heat, fumes or vapors.

VOLTAGE (OF A CIRCUIT). The greatest root-mean-square (rms) (effective) difference of potential between any two conductors of the circuit concerned.

VOLTAGE, NOMINAL. A nominal value assigned to a circuit or system for the purpose of conveniently designating its voltage class (e.g., 120/240). The actual voltage at which a circuit operates can vary from the nominal within a range that permits satisfactory operation of equipment.

VOLTAGE TO GROUND. For grounded circuits, the voltage between the given conductor and that point or conductor of the circuit that is grounded. For ungrounded circuits, the greatest voltage between the given conductor and any other conductor of the circuit.

WATERTIGHT. Constructed so that moisture will not enter the enclosure under specified test conditions.

WEATHERPROOF. Constructed or protected so that exposure to the weather will not interfere with successful operation.

CHAPTER 36

SERVICES

SECTION E3601
GENERAL SERVICES

E3601.1 Scope. This chapter covers service conductors and equipment for the control and protection of services and their installation requirements. (230.1)

E3601.2 Number of services. One- and two-family dwellings shall be supplied by only one service. (230.2)

E3601.3 One building or other structure not to be supplied through another. Service conductors supplying a building or other structure shall not pass through the interior of another building or other structure. (230.3)

E3601.4 Other conductors in raceway or cable. Conductors other than service conductors shall not be installed in the same service raceway or service cable. (230.7)

Exceptions:

1. Grounding electrode conductors and equipment bonding jumpers or conductors.
2. Load management control conductors having overcurrent protection.

E3601.5 Raceway seal. Where a service raceway enters from an underground distribution system, it shall be sealed in accordance with Section E3803.6. (230.8)

E3601.6 Service disconnect required. Means shall be provided to disconnect all conductors in a building or other structure from the service entrance conductors. (230.70)

E3601.6.1 Marking of service equipment and disconnects. Service disconnects shall be permanently marked as a service disconnect. [230.70(B)]

E3601.6.2 Service disconnect location. The service disconnecting means shall be installed at a readily accessible location either outside of a building or inside nearest the point of entrance of the service conductors. Service disconnecting means shall not be installed in bathrooms. Each occupant shall have access to the disconnect serving the dwelling unit in which they reside. [230.70(A)(1), 230.72(C)]

E3601.7 Maximum number of disconnects. The service disconnecting means shall consist of not more than six switches or six circuit breakers mounted in a single enclosure or in a group of separate enclosures. [230.71(A)]

SECTION E3602
SERVICE SIZE AND RATING

E3602.1 Ampacity of ungrounded conductors. Ungrounded service conductors shall have an ampacity of not less than the load served. For one-family dwellings, the ampacity of the ungrounded conductors shall be not less than 100 amperes, 3 wire. For all other installations, the ampacity of the ungrounded conductors shall be not less than 60 amperes. [230.42(B), 230.79(C) & (D)]

E3602.2 Service load. The minimum load for ungrounded service conductors and service devices that serve 100 percent of the dwelling unit load shall be computed in accordance with Table E3602.2. Ungrounded service conductors and service devices that serve less than 100 percent of the dwelling unit load shall be computed as required for feeders in accordance with Chapter 37. [220.82(A)]

E3602.2.1 Services under 100 amperes. Services that are not required to be 100 amperes shall be sized in accordance with Chapter 37. [230.42(A), (B), and (C)].

TABLE E3602.2
MINIMUM SERVICE LOAD CALCULATION [220.82(B) & (C)]

LOADS AND PROCEDURE
3 volt-amperes per square foot of floor area for general lighting and general use receptacle outlets.
Plus
1,500 volt-amperes multiplied by total number of 20-ampere-rated small appliance and laundry circuits.
Plus
The nameplate volt-ampere rating of all fastened-in-place, permanently connected or dedicated circuit-supplied appliances such as ranges, ovens, cooking units, clothes dryers not connected to the laundry branch circuit and water heaters.
Apply the following demand factors to the above subtotal:
The minimum subtotal for the loads above shall be 100 percent of the first 10,000 volt-amperes of the sum of the above loads plus 40 percent of any portion of the sum that is in excess of 10,000 volt-amperes.
Plus the largest of the following:
One-hundred percent of the nameplate rating(s) of the air-conditioning and cooling equipment.
One hundred percent of the nameplate rating(s) of the heat pump where a heat pump is used without any supplemental electric heating.
One-hundred percent of the nameplate rating of the electric thermal storage and other heating systems where the usual load is expected to be continuous at the full nameplate value. Systems qualifying under this selection shall not be figured under any other category in this table.
One-hundred percent of nameplate rating of the heat pump compressor and sixty-five percent of the supplemental electric heating load for central electric space-heating systems. If the heat pump compressor is prevented from operating at the same time as the supplementary heat, the compressor load does not need to be added to the supplementary heat load for the total central electric space-heating load.
Sixty-five percent of nameplate rating(s) of electric space-heating units if less than four separately controlled units.
Forty percent of nameplate rating(s) of electric space-heating units of four or more separately controlled units.
The minimum total load in amperes shall be the volt-ampere sum calculated above divided by 240 volts.

E3602.3 Rating of service disconnect. The combined rating of all individual service disconnects serving a single dwelling unit shall be not less than the load determined from Table E3602.2 and shall be not less than as specified in Section E3602.1. (230.79 & 230.80)

E3602.4 Voltage rating. Systems shall be three-wire, 120/240-volt, single-phase with a grounded neutral. [220.82(A)]

SECTION E3603
SERVICE, FEEDER AND GROUNDING ELECTRODE CONDUCTOR SIZING

E3603.1 Grounded and ungrounded service conductor size. Service and feeder conductors supplied by a single-phase, 120/240-volt system shall be sized in accordance with Sections E3603.1.1 through E3603.1.4 and Table 3705.1.

E3603.1.1 For a service rated at 100 through 400 amperes, the service conductors supplying the entire load associated with a one-family dwelling, or the service conductors supplying the entire load associated with an individual dwelling unit in a two-family dwelling, shall have an ampacity of not less than 83 percent of the service rating.

E3603.1.2 For a feeder rated at 100 through 400 amperes, the feeder conductors supplying the entire load associated with a one-family dwelling, or the feeder conductors supplying the entire load associated with an individual dwelling unit in a two-family dwelling, shall have an ampacity of not less than 83 percent of the feeder rating.

E3603.1.3 A feeder for an individual dwelling unit shall not be required to have an ampacity greater than that specified in Sections E3603.1.1 and E3603.1.2.

E3603.1.4 The grounded conductor ampacity shall be not less than the maximum unbalance of the load and the size of the grounded conductor shall be not smaller than the required minimum grounding electrode conductor size specified in Table E3603.4. [310.15(B)(7)]

E3603.2 Ungrounded service conductors for accessory buildings and structures. Ungrounded conductors for other than dwelling units shall have an ampacity of not less than 60 amperes and shall be sized as required for feeders in Chapter 37. [230.79(D)]

Exceptions:

1. For limited loads of a single branch circuit, the service conductors shall have an ampacity of not less than 15 amperes. [230.79(A)]
2. For loads consisting of not more than two two-wire branch circuits, the service conductors shall have an ampacity of not less than 30 amperes. [230.79(C)]

E3603.3 Overload protection. Each ungrounded service conductor shall have overload protection. (230.90)

E3603.3.1 Ungrounded conductor. Overload protection shall be provided by an overcurrent device installed in series with each ungrounded service conductor. The overcurrent device shall have a rating or setting not higher than the allowable service or feeder rating specified in Section E3603.1. A set of fuses shall be considered to be all of the fuses required to protect all of the ungrounded conductors of a circuit. Single pole circuit breakers, grouped in accordance with Section E3601.7, shall be considered as one protective device. [230.90(A)]

Exception: Two to six circuit breakers or sets of fuses shall be permitted as the overcurrent device to provide the overload protection. The sum of the ratings of the circuit breakers or fuses shall be permitted to exceed the ampacity of the service conductors, provided that the calculated load does not exceed the ampacity of the service conductors. [230.90(A) Exception No. 3]

E3603.3.2 Not in grounded conductor. Overcurrent devices shall not be connected in series with a grounded service conductor except where a circuit breaker is used that simultaneously opens all conductors of the circuit. [230.90(B)]

E3603.3.3 Location. The service overcurrent device shall be an integral part of the service disconnecting means or shall be located immediately adjacent thereto. (230.91)

E3603.4 Grounding electrode conductor size. The grounding electrode conductors shall be sized based on the size of the service entrance conductors as required in Table E3603.4. (250.66)

TABLE E3603.4
GROUNDING ELECTRODE CONDUCTOR SIZE[a, b, c, d, e, f]

SIZE OF LARGEST UNGROUNDED SERVICE-ENTRANCE CONDUCTOR OR EQUIVALENT AREA FOR PARALLEL CONDUCTORS (AWG/kcmil)		SIZE OF GROUNDING ELECTRODE CONDUCTOR (AWG/kcmil)	
Copper	Aluminum or copper-clad aluminum	Copper	Aluminum or copper-clad aluminum
2 or smaller	1/0 or smaller	8	6
1 or 1/0	2/0 or 3/0	6	4
2/0 or 3/0	4/0 or 250	4	2
Over 3/0 through 350	Over 250 through 500	2	1/0
Over 350 through 600	Over 500 through 900	1/0	3/0

a. If multiple sets of service-entrance conductors connect directly to a service drop, set of overhead service conductors, set of underground service conductors, or service lateral, the equivalent size of the largest service-entrance conductor shall be determined by the largest sum of the areas of the corresponding conductors of each set.

b. Where there are no service-entrance conductors, the grounding electrode conductor size shall be determined by the equivalent size of the largest service-entrance conductor required for the load to be served.

c. Where protected by a ferrous metal raceway, grounding electrode conductors shall be electrically bonded to the ferrous metal raceway at both ends. [250.64(E)(1)]

d. An 8 AWG grounding electrode conductor shall be protected with rigid metal conduit, intermediate metal conduit, rigid polyvinyl chloride (Type PVC) nonmetallic conduit, rigid thermosetting resin (Type RTRC) nonmetallic conduit, electrical metallic tubing or cable armor. [250.64(B)]

e. Where not protected, 6 AWG grounding electrode conductor shall closely follow a structural surface for physical protection. The supports shall be spaced not more than 24 inches on center and shall be within 12 inches of any enclosure or termination. [250.64(B)]

f. Where the sole grounding electrode system is a ground rod or pipe as covered in Section E3608.3, the grounding electrode conductor shall not be required to be larger than 6 AWG copper or 4 AWG aluminum. Where the sole grounding electrode system is the footing steel as covered in Section E3608.1.2, the grounding electrode conductor shall not be required to be larger than 4 AWG copper conductor. [250.66(A) and (B)]

E3603.5 Temperature limitations. Except where the equipment is marked otherwise, conductor ampacities used in determining equipment termination provisions shall be based on Table E3705.1. [110.14(C)(1)]

SECTION E3604
OVERHEAD SERVICE AND SERVICE-ENTRANCE CONDUCTOR INSTALLATION

E3604.1 Clearances on buildings. Open conductors and multiconductor cables without an overall outer jacket shall have a clearance of not less than 3 feet (914 mm) from the sides of doors, porches, decks, stairs, ladders, fire escapes and balconies, and from the sides and bottom of windows that open. See Figure E3604.1. [230.9(A)]

E3604.2 Vertical clearances. Overhead service conductors shall not have ready access and shall comply with Sections E3604.2.1 and E3604.2.2. (230.24)

E3604.2.1 Above roofs. Conductors shall have a vertical clearance of not less than 8 feet (2438 mm) above the roof surface. The vertical clearance above the roof level shall be maintained for a distance of not less than 3 feet (914 mm) in all directions from the edge of the roof. See Figure E3604.2.1. [230.24(A)]

Exceptions:

1. Conductors above a roof surface subject to pedestrian traffic shall have a vertical clearance from the roof surface in accordance with Section E3604.2.2. [230.24(A) Exception No. 1]
2. Where the roof has a slope of 4 inches (102 mm) in 12 inches (305 mm), or greater, the minimum clearance shall be 3 feet (914 mm). [230.24(A) Exception No. 2]
3. The minimum clearance above only the overhanging portion of the roof shall not be less than 18 inches (457 mm) where not more than 6 feet (1829 mm) of overhead service conductor length passes over 4 feet (1219 mm) or less of roof surface measured horizontally and such conductors are terminated at a through-the-roof raceway or approved support. [230.24(A) Exception No. 3]
4. The requirement for maintaining the vertical clearance for a distance of 3 feet (914 mm) from the edge of the roof shall not apply to the final conductor span where the service drop is attached to the side of a building. [230.24(A) Exception No. 4]
5. Where the voltage between conductors does not exceed 300 and the roof area is guarded or isolated, a reduction in clearance to 3 feet (914 mm) shall be permitted. [230.24(A) Exception No. 5]

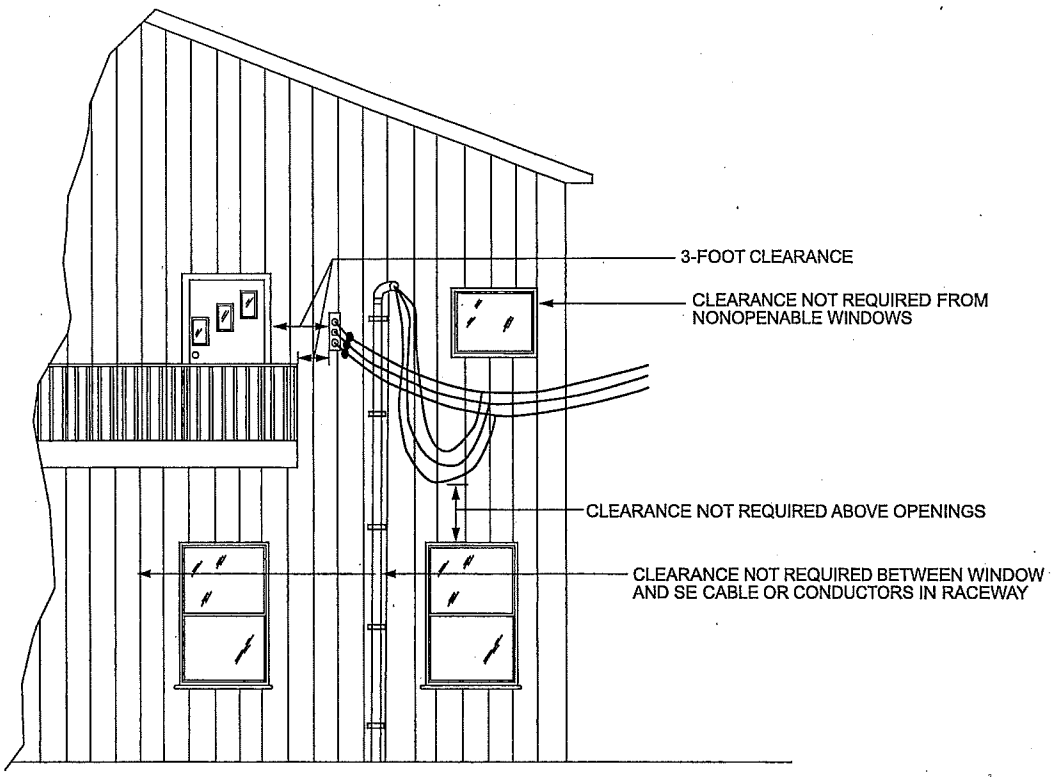

For SI: 1 foot = 304.8 mm.

FIGURE E3604.1
CLEARANCES FROM BUILDING OPENINGS

3139

E3604.2.2 Vertical clearance from grade. Overhead service conductors shall have the following minimum clearances from final grade:

1. For conductors supported on and cabled together with a grounded bare messenger wire, the minimum vertical clearance shall be 10 feet (3048 mm) at the electric service entrance to buildings, at the lowest point of the drip loop of the building electric entrance, and above areas or sidewalks accessed by pedestrians only. Such clearance shall be measured from final grade or other accessible surfaces.
2. Twelve feet (3658 mm)—over residential property and driveways.
3. Eighteen feet (5486 mm)—over public streets, alleys, roads or parking areas subject to truck traffic. [(230.24(B)(1), (2), and (4)]

E3604.3 Point of attachment. The point of attachment of the overhead service conductors to a building or other structure shall provide the minimum clearances as specified in Sections E3604.1 through E3604.2.2. The point of attachment shall be not less than 10 feet (3048 mm) above finished grade. (230.26)

E3604.4 Means of attachment. Multiconductor cables used for overhead service conductors shall be attached to buildings or other structures by fittings approved for the purpose. (230.27)

E3604.5 Service masts as supports. A service mast used for the support of service-drop or overhead service conductors shall comply with Sections E3604.5.1 and E3604.5.2. Only power service drop or overhead service conductors shall be attached to a service mast.

E3504.5.1 Strength. The service mast shall be of adequate strength or shall be supported by braces or guys to safely withstand the strain imposed by the service-drop or overhead service conductors. Hubs intended for use with a conduit that serves as a service mast shall be identified for use with service-entrance equipment.

E3604.5.2 Attachment. Service-drop or overhead service conductors shall not be attached to a service mast at a point between a coupling and a weatherhead or the end of the conduit, where the coupling is located above the last point of securement of the building or other structure or is located above the building or other structure. [230.28(A) & (B)]

E3604.6 Supports over buildings. Service conductors passing over a roof shall be securely supported. Where practicable, such supports shall be independent of the building. (230.29)

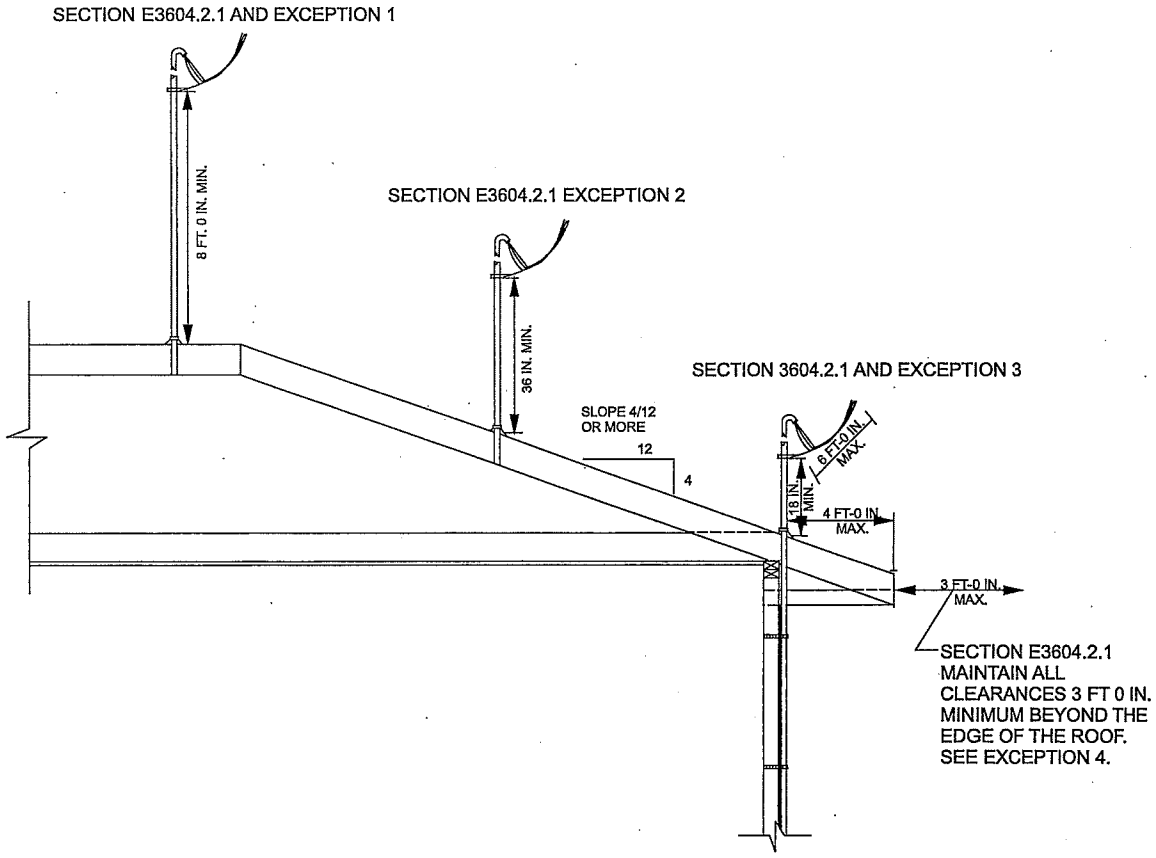

For SI: 1 inch = 25.4 mm, 1 foot = 304.8 mm.

FIGURE E3604.2.1
CLEARANCES FROM ROOFS

SECTION E3605
SERVICE-ENTRANCE CONDUCTORS

E3605.1 Insulation of service-entrance conductors. Service-entrance conductors entering or on the exterior of buildings or other structures shall be insulated in accordance with Section E3406.5. (230.41)

Exceptions:

1. A copper grounded conductor shall not be required to be insulated where it is:
   - 1.1. In a raceway or part of a service cable assembly,
   - 1.2. Directly buried in soil of suitable condition, or
   - 1.3. Part of a cable assembly listed for direct burial without regard to soil conditions.
2. An aluminum or copper-clad aluminum grounded conductor shall not be required to be insulated where part of a cable or where identified for direct burial or utilization in underground raceways. (230.41 Exception)

E3605.2 Wiring methods for services. Service-entrance wiring methods shall be installed in accordance with the applicable requirements in Chapter 38. (230.43)

E3605.3 Spliced conductors. Service-entrance conductors shall be permitted to be spliced or tapped. Splices shall be made in enclosures or, if directly buried, with listed underground splice kits. Conductor splices shall be made in accordance with Chapters 34, 37, 38 and 39. (230.33, 230.46)

E3605.4 Protection of underground service entrance conductors. Underground service-entrance conductors shall be protected against physical damage in accordance with Chapter 38. (230.32)

E3605.5 Protection of all other service cables. Aboveground service-entrance cables, where subject to physical damage, shall be protected by one or more of the following: rigid metal conduit, intermediate metal conduit, Schedule 80 PVC conduit, electrical metallic tubing or other approved means. [230.50(1)]

E3605.6 Locations exposed to direct sunlight. Insulated conductors and cables used where exposed to direct rays of the sun shall comply with one of the following:

1. The conductors and cables shall be listed, or listed and marked, as being sunlight resistant.
2. The conductors and cables are covered with insulating material, such as tape or sleeving, that is listed, or listed and marked, as being sunlight resistant. [310.10(D)]

E3605.7 Mounting supports. Service-entrance cables shall be supported by straps or other approved means within 12 inches (305 mm) of every service head, gooseneck or connection to a raceway or enclosure and at intervals not exceeding 30 inches (762 mm). [230.51(A)]

E3605.8 Raceways to drain. Where exposed to the weather, raceways enclosing service-entrance conductors shall be suitable for use in wet locations and arranged to drain. Where embedded in masonry, raceways shall be arranged to drain. (230.53)

E3605.9 Overhead service locations. Connections at service heads shall be in accordance with Sections E3605.9.1 through E3605.9.7. (230.54)

E3605.9.1 Rain-tight service head. Service raceways shall be equipped with a service head at the point of connection to service-drop or overhead conductors. The service head shall be listed for use in wet locations. [230.54(A)]

E3605.9.2 Service cable, service head or gooseneck. Service-entrance cable shall be equipped with a service head or shall be formed into a gooseneck in an approved manner. The service head shall be listed for use in wet locations. [230.54(B)]

E3605.9.3 Service-head location. Service heads, and goosenecks in service-entrance cables, shall be located above the point of attachment of the service-drop or overhead service conductors to the building or other structure. [230.54(C)]

Exception: Where it is impracticable to locate the service head or gooseneck above the point of attachment, the service head or gooseneck location shall be not more than 24 inches (610 mm) from the point of attachment. [230.54(C) Exception]

E3605.9.4 Separately bushed openings. Service heads shall have conductors of different potential brought out through separately bushed openings. [230.54(E)]

E3605.9.5 Drip loops. Drip loops shall be formed on individual conductors. To prevent the entrance of moisture, service-entrance conductors shall be connected to the service-drop or overhead conductors either below the level of the service head or below the level of the termination of the service-entrance cable sheath. [230.54(F)]

E3605.9.6 Conductor arrangement. Service-entrance and overhead service conductors shall be arranged so that water will not enter service raceways or equipment. [230.54(G)]

E3605.9.7 Secured. Service-entrance cables shall be held securely in place. [230.54(D)]

SECTION E3606
SERVICE EQUIPMENT—GENERAL

E3606.1 Service equipment enclosures. Energized parts of service equipment shall be enclosed. (230.62)

E3606.2 Working space. The working space in the vicinity of service equipment shall be not less than that specified in Chapter 34. (110.26)

E3606.3 Available short-circuit current. Service equipment shall be suitable for the maximum fault current available at its supply terminals, but not less than 10,000 amperes. (110.9)

E3606.4 Marking. Service equipment shall be marked to identify it as being suitable for use as service equipment. Service equipment shall be listed. Individual meter socket enclosures shall not be considered as service equipment. (230.66)

SECTION E3607
SYSTEM GROUNDING

E3607.1 System service ground. The premises wiring system shall be grounded at the service with a grounding electrode conductor connected to a grounding electrode system as required by this code. Grounding electrode conductors shall be sized in accordance with Table E3603.4. [250.20(B)(1) and 250.24(A)]

E3607.2 Location of grounding electrode conductor connection. The grounding electrode conductor shall be connected to the grounded service conductor at any accessible point from the load end of the overhead service conductors, service drop, underground service conductors, or service lateral to and including the terminal or bus to which the grounded service conductor is connected at the service disconnecting means. A grounding connection shall not be made to any grounded circuit conductor on the load side of the service disconnecting means, except as provided in Section E3607.3.2. [250.24(A)(1) and (A)(5)]

E3607.3 Buildings or structures supplied by feeder(s) or branch circuit(s). Buildings or structures supplied by feeder(s) or branch circuit(s) shall have a grounding electrode or grounding electrode system installed in accordance with Section E3608. The grounding electrode conductor(s) shall be connected in a manner specified in Section E3607.3.1 or, for existing premises wiring systems only, Section E3607.3.2. Where there is no existing grounding electrode, the grounding electrode(s) required in Section E3608 shall be installed. [250.32(A)]

Exception: A grounding electrode shall not be required where only one branch circuit, including a multiwire branch circuit, supplies the building or structure and the branch circuit includes an equipment grounding conductor for grounding the noncurrent-carrying parts of all equipment. For the purposes of this section, a multiwire branch circuit shall be considered as a single branch circuit. [250.32(A) Exception]

E3607.3.1 Equipment grounding conductor. An equipment grounding conductor as described in Section E3908 shall be run with the supply conductors and connected to the building or structure disconnecting means and to the grounding electrode(s). The equipment grounding conductor shall be used for grounding or bonding of equipment, structures or frames required to be grounded or bonded. The equipment grounding conductor shall be sized in accordance with Section E3908.12. Any installed grounded conductor shall not be connected to the equipment grounding conductor or to the grounding electrode(s). [250.32(B) and Table 250.122]

E3607.3.2 Grounded conductor, existing premises. For installations made in compliance with previous editions of this code that permitted such connection and where an equipment grounding conductor is not run with the supply conductors to the building or structure, there are no continuous metallic paths bonded to the grounding system in both buildings or structures involved, and ground-fault protection of equipment has not been installed on the supply side of the feeder(s), the grounded conductor run with the supply to the buildings or structure shall be connected to the building or structure disconnecting means and to the grounding electrode(s) and shall be used for grounding or bonding of equipment, structures, or frames required to be grounded or bonded. Where used for grounding in accordance with this provision, the grounded conductor shall be not smaller than the larger of:

1. That required by Section E3704.3.
2. That required by Section E3908.12. [250.32(B)(1) Exception]

E3607.4 Grounding electrode conductor. A grounding electrode conductor shall be used to connect the equipment grounding conductors, the service equipment enclosures, and the grounded service conductor to the grounding electrode(s). This conductor shall be sized in accordance with Table E3603.4. [250.24(D)]

E3607.5 Main bonding jumper. An unspliced main bonding jumper shall be used to connect the equipment grounding conductor(s) and the service-disconnect enclosure to the grounded conductor of the system within the enclosure for each service disconnect. [250.24(B)]

E3607.6 Common grounding electrode. Where an ac system is connected to a grounding electrode in or at a building or structure, the same electrode shall be used to ground conductor enclosures and equipment in or on that building or structure. Where separate services, feeders or branch circuits supply a building and are required to be connected to a grounding electrode(s), the same grounding electrode(s) shall be used. Two or more grounding electrodes that are effectively bonded together shall be considered as a single grounding electrode system. (250.58)

SECTION E3608
GROUNDING ELECTRODE SYSTEM

E3608.1 Grounding electrode system. All electrodes specified in Sections E3608.1.1, E3608.1.2, E3608.1.3, E3608.1.4 E3608.1.5 and E3608.1.6 that are present at each building or structure served shall be bonded together to form the grounding electrode system. Where none of these electrodes are present, one or more of the electrodes specified in Sections E3608.1.3, E3608.1.4, E3608.1.5 and E3608.1.6 shall be installed and used. (250.50)

Exception: Concrete-encased electrodes of existing buildings or structures shall not be required to be part of the grounding electrode system where the steel reinforcing bars or rods are not accessible for use without disturbing the concrete. (250.50 Exception)

E3608.1.1 Metal underground water pipe. A metal underground water pipe that is in direct contact with the earth for 10 feet (3048 mm) or more, including any well casing effectively bonded to the pipe and that is electrically continuous, or made electrically continuous by bonding around insulating joints or insulating pipe to the points of connection of the grounding electrode conductor and the bonding conductors, shall be considered as a grounding electrode (see Section E3608.1). [250.52(A)(1)]

E3608.1.1.1 Interior metal water piping. Interior metal water piping located more than 5 feet (1524 mm) from the entrance to the building shall not be used as a conductor to interconnect electrodes that are part of the grounding electrode system. [250.68(C)(1)]

E3608.1.1.2 Installation. Continuity of the grounding path or the bonding connection to interior piping shall not rely on water meters, filtering devices and similar equipment. A metal underground water pipe shall be supplemented by an additional electrode of a type specified in Sections E3608.1.2 through E3608.1.6. The supplemental electrode shall be bonded to the grounding electrode conductor, the grounded service-entrance conductor, a nonflexible grounded service raceway, any grounded service enclosure or to the equipment grounding conductor provided in accordance with Section E3607.3.1. Where the supplemental electrode is a rod, pipe or plate electrode in accordance with Section E3608.1.4 or E3608.1.5, it shall comply with Section E3608.4.

Where the supplemental electrode is a rod, pipe or plate electrode in accordance with Section E3608.1.4 or E3608.1.5, that portion of the bonding jumper that is the sole connection to the supplemental grounding electrode shall not be required to be larger than 6 AWG copper or 4 AWG aluminum wire. [250.53(D) and (E)]

E3608.1.2 Concrete-encased electrode. A concrete-encased electrode consisting of at least 20 feet (6096 mm) of either of the following shall be considered as a grounding electrode:

1. One or more bare or zinc galvanized or other electrically conductive coated steel reinforcing bars or rods not less than $^1/_2$ inch (13 mm) in diameter, installed in one continuous 20-foot (6096 mm) length, or if in multiple pieces connected together by the usual steel tie wires, exothermic welding, welding, or other effective means to create a 20-foot (6096 mm) or greater length.
2. A bare copper conductor not smaller than 4 AWG.

Metallic components shall be encased by at least 2 inches (51 mm) of concrete and shall be located horizontally within that portion of a concrete foundation or footing that is in direct contact with the earth or within vertical foundations or structural components or members that are in direct contact with the earth.

Where multiple concrete-encased electrodes are present at a building or structure, only one shall be required to be bonded into the grounding electrode system. [250.52(A)(3)]

E3608.1.3 Ground rings. A ground ring encircling the building or structure, in direct contact with the earth at a depth below the earth's surface of not less than 30 inches (762 mm), consisting of at least 20 feet (6096 mm) of bare copper conductor not smaller than 2 AWG shall be considered as a grounding electrode. [250.52(A)(4)]

E3608.1.4 Rod and pipe electrodes. Rod and pipe electrodes not less than 8 feet (2438 mm) in length and consisting of the following materials shall be considered as a grounding electrode:

1. Grounding electrodes of pipe or conduit shall not be smaller than trade size $^3/_4$ (metric designator 21) and, where of iron or steel, shall have the outer surface galvanized or otherwise metal-coated for corrosion protection.
2. Rod-type grounding electrodes of stainless steel and copper or zinc-coated steel shall be at least $^5/_8$ inch (15.9 mm) in diameter unless listed. [250.52(A)(5)]

E3608.1.4.1 Installation. The rod and pipe electrodes shall be installed such that at least 8 feet (2438 mm) of length is in contact with the soil. They shall be driven to a depth of not less than 8 feet (2438 mm) except that, where rock bottom is encountered, electrodes shall be driven at an oblique angle not to exceed 45 degrees (0.79 rad) from the vertical or shall be buried in a trench that is at least 30 inches (762 mm) deep. The upper end of the electrodes shall be flush with or below ground level except where the aboveground end and the grounding electrode conductor attachment are protected against physical damage. (250.53(G)]

E3608.1.5 Plate electrodes. A plate electrode that exposes not less than 2 square feet (0.186 m^2) of surface to exterior soil shall be considered as a grounding electrode. Electrodes of bare or conductively coated iron or steel plates shall be at least $^1/_4$ inch (6.4 mm) in thickness. Solid, uncoated electrodes of nonferrous metal shall be at least 0.06 inch (1.5 mm) in thickness. Plate electrodes shall be installed not less than 30 inches (762 mm) below the surface of the earth. [250.52(A)(7)]

E3608.1.6 Other electrodes. In addition to the grounding electrodes specified in Sections E3608.1.1 through E3608.1.5, other listed grounding electrodes shall be permitted. [250.52(A)(6)]

E3608.2 Bonding jumper. The bonding jumper(s) used to connect the grounding electrodes together to form the grounding electrode system shall be installed in accordance with Sections E3610.2, and E3610.3, shall be sized in accordance with Section E3603.4, and shall be connected in the manner specified in Section E3611.1. [250.53(C)]

E3608.3 Rod, pipe and plate electrode requirements. Where practicable, rod, pipe and plate electrodes shall be embedded below permanent moisture level. Such electrodes shall be free from nonconductive coatings such as paint or enamel. Where more than one such electrode is used, each electrode of one grounding system shall be not less than 6 feet (1829 mm) from any other electrode of another grounding system. Two or more grounding electrodes that are effectively bonded together shall be considered as a single grounding electrode system. That portion of a bonding jumper that is the sole connection to a rod, pipe or plate electrode shall not be

required to be larger than 6 AWG copper or 4 AWG aluminum wire. [250.53(A)(1), 250.53(B), 250.53(C)]

E3608.4 Supplemental electrode required. A single rod, pipe, or plate electrode shall be supplemented by an additional electrode of a type specified in Sections E3608.1.2 through E3608.1.6. The supplemental electrode shall be bonded to one of the following:

1. A rod, pipe, or plate electrode.
2. A grounding electrode conductor.
3. A grounded service-entrance conductor.
4. A nonflexible grounded service raceway.
5. A grounded service enclosure.

Where multiple rod, pipe, or plate electrodes are installed to meet the requirements of this section, they shall not be less than 6 feet (1829 mm) apart. [250.53(A)(2) and (A)(3)]

Exception: Where a single rod, pipe, or plate grounding electrode has a resistance to earth of 25 ohms or less, the supplemental electrode shall not be required. [250.53(A)(2) Exception]

E3608.5 Aluminum electrodes. Aluminum electrodes shall not be permitted. [250.52(B)(2)]

E3608.6 Metal underground gas piping system. A metal underground gas piping system shall not be used as a grounding electrode. [250.52(B)(1)]

SECTION E3609
BONDING

E3609.1 General. Bonding shall be provided where necessary to ensure electrical continuity and the capacity to conduct safely any fault current likely to be imposed. (250.90)

E3609.2 Bonding of equipment for services. The noncurrent-carrying metal parts of the following equipment shall be effectively bonded together:

1. Raceways or service cable armor or sheath that enclose, contain, or support service conductors.
2. Service enclosures containing service conductors, including meter fittings, and boxes, interposed in the service raceway or armor. [250.92(A)]

E3609.3 Bonding for other systems. An intersystem bonding termination for connecting intersystem bonding conductors required for other systems shall be provided external to enclosures at the service equipment or metering equipment enclosure and at the disconnecting means for any additional buildings or structures. The intersystem bonding termination shall comply with all of the following:

1. It shall be accessible for connection and inspection.
2. It shall consist of a set of terminals with the capacity for connection of not less than three intersystem bonding conductors.
3. It shall not interfere with opening of the enclosure for a service, building or structure disconnecting means, or metering equipment.
4. Where located at the service equipment, it shall be securely mounted and electrically connected to an enclosure for the service equipment, to the meter enclosure, or to an exposed nonflexible metallic service raceway, or shall be mounted at one of these enclosures and connected to the enclosure or to the grounding electrode conductor with a 6 AWG or larger copper conductor.
5. Where located at the disconnecting means for a building or structure, it shall be securely mounted and electrically connected to the metallic enclosure for the building or structure disconnecting means, or shall be mounted at the disconnecting means and connected to the metallic enclosure or to the grounding electrode conductor with a 6 AWG or larger copper conductor.
6. It shall be listed as grounding and bonding equipment. (250.94)

E3609.4 Method of bonding at the service. Bonding jumpers meeting the requirements of this chapter shall be used around impaired connections, such as reducing washers or oversized, concentric, or eccentric knockouts. Standard locknuts or bushings shall not be the only means for the bonding required by this section but shall be permitted to be installed to make mechanical connections of raceways. Electrical continuity at service equipment, service raceways and service conductor enclosures shall be ensured by one or more of the methods specified in Sections E3609.4.1 through E3609.4.4.

E3609.4.1 Grounded service conductor. Equipment shall be bonded to the grounded service conductor in a manner provided in this code.

E3609.4.2 Threaded connections. Equipment shall be bonded by connections using threaded couplings or threaded hubs on enclosures. Such connections shall be made wrench tight.

E3609.4.3 Threadless couplings and connectors. Equipment shall be bonded by threadless couplings and connectors for metal raceways and metal-clad cables. Such couplings and connectors shall be made wrench tight. Standard locknuts or bushings shall not be used for the bonding required by this section.

E3609.4.4 Other devices. Equipment shall be bonded by other listed devices, such as bonding-type locknuts, bushings and bushings with bonding jumpers. [250.92(B)]

E3609.5 Sizing supply-side bonding jumper and main bonding jumper. The bonding jumper shall not be smaller than the sizes shown in Table E3603.4 for grounding electrode conductors. Where the service-entrance conductors are paralleled in two or more raceways or cables, and an individual supply-side bonding jumper is used for bonding these raceways or cables, the supply-side bonding jumper for each raceway or cable shall be selected from Table E3603.4 based on the size of the ungrounded supply conductors in each raceway or cable. A single supply-side bonding jumper installed for bonding two or more raceways or cables shall be sized in accordance with Table E3603.4 based on the largest set of parallel ungrounded supply conductors. [250.102(C)]

E3609.6 Metal water piping bonding. The metal water piping system shall be bonded to the service equipment enclosure, the grounded conductor at the service, the grounding electrode conductor where of sufficient size, or to the one or more grounding electrodes used. The bonding jumper shall be sized in accordance with Table E3603.4. The points of attachment of the bonding jumper(s) shall be accessible. [250.104(A) and 250.104(A)(1)]

E3609.7 Bonding other metal piping. Where installed in or attached to a building or structure, metal piping systems, including gas piping, capable of becoming energized shall be bonded to the service equipment enclosure, the grounded conductor at the service, the grounding electrode conductor where of sufficient size, or to the one or more grounding electrodes used. The bonding conductor(s) or jumper(s) shall be sized in accordance with Table E3908.12 using the rating of the circuit capable of energizing the piping. The equipment grounding conductor for the circuit that is capable of energizing the piping shall be permitted to serve as the bonding means. The points of attachment of the bonding jumper(s) shall be accessible. [250.104(B)]

SECTION E3610
GROUNDING ELECTRODE CONDUCTORS

E3610.1 Continuous. The grounding electrode conductor shall be installed in one continuous length without splices or joints and shall run to any convenient grounding electrode available in the grounding electrode system where the other electrode(s), if any, are connected by bonding jumpers in accordance with Section E3608.2, or to one or more grounding electrode(s) individually. The grounding electrode conductor shall be sized for the largest grounding electrode conductor required among all of the electrodes connected to it. [250.64(C)]

> **Exception:** Splicing of the grounding electrode conductor by irreversible compression-type connectors listed as grounding and bonding equipment or by the exothermic welding process shall not be prohibited. [250.64(C)(1)]

E3610.2 Securing and protection against physical damage. Where exposed, a grounding electrode conductor or its enclosure shall be securely fastened to the surface on which it is carried. Grounding electrode conductors shall be permitted to be installed on or through framing members. A 4 AWG or larger conductor shall be protected where exposed to physical damage. A 6 AWG grounding conductor that is free from exposure to physical damage shall be permitted to be run along the surface of the building construction without metal covering or protection where it is and securely fastened to the construction; otherwise, it shall be in rigid metal conduit, intermediate metal conduit, rigid polyvinyl chloride (PVC), nonmetallic conduit, reinforced thermosetting resin (RTRC) nonmetallic conduit, electrical metallic tubing or cable armor. Grounding electrode conductors smaller than 6 AWG shall be in rigid metal conduit, intermediate metal conduit, rigid polyvinyl chloride (PVC) nonmetallic conduit, reinforced thermoseting resin (RTRC) nonmetallic conduit, electrical metallic tubing or cable armor. Grounding electrode conductors and grounding electrode bonding jumpers shall not be required to comply with Section E3803. [250.64(B)]

Bare aluminum or copper-clad aluminum grounding electrode conductors shall not be used where in direct contact with masonry or the earth or where subject to corrosive conditions. Where used outside, aluminum or copper-clad aluminum grounding electrode conductors shall not be installed within 18 inches (457 mm) of the earth. [250.64(A)]

E3610.3 Raceways and enclosures for grounding electrode conductors. Ferrous metal raceways and enclosures for grounding electrode conductors shall be electrically continuous from the point of attachment to cabinets or equipment to the grounding electrode, and shall be securely fastened to the ground clamp or fitting. Nonferrous metal raceways and enclosures shall not be required to be electrically continuous. Ferrous metal raceways and enclosures shall be bonded at each end of the raceway or enclosure to the grounding electrode or to the grounding electrode conductor. Bonding methods in compliance with Section E3609.4 for installations at service equipment locations and with E3609.4.2 through E3609.4.4 for other than service equipment locations shall apply at each end and to all intervening ferrous raceways, boxes, and enclosures between the cabinets or equipment and the grounding electrode. The bonding jumper for a grounding electrode conductor raceway shall be the same size or larger than the required enclosed grounding electrode conductor.

Where a raceway is used as protection for a grounding conductor, the installation shall comply with the requirements of Chapter 38. [250.64(E)(4)]

E3610.4 Prohibited use. An equipment grounding conductor shall not be used as a grounding electrode conductor. (250.121)

> **Exception:** A wire-type equipment grounding conductor shall be permitted to serve as both an equipment grounding conductor and a grounding electrode conductor where installed in accordance with the applicable requirements for both the equipment grounding conductor and the grounding electrode conductor in Chapters 36 and 39. Where used as a grounding electrode conductor, the wire-type equipment grounding conductor shall be installed and arranged in a manner that will prevent objectionable current. [250.121 Exception, 250.6(A)]

SECTION E3611
GROUNDING ELECTRODE CONDUCTOR CONNECTION TO THE GROUNDING ELECTRODES

E3611.1 Methods of grounding conductor connection to electrodes. The grounding or bonding conductor shall be connected to the grounding electrode by exothermic welding, listed lugs, listed pressure connectors, listed clamps or other listed means. Connections depending on solder shall not be used. Ground clamps shall be listed for the materials of the grounding electrode and the grounding electrode conductor and, where used on pipe, rod or other buried electrodes, shall also be listed for direct soil burial or concrete encasement. Not more than one conductor shall be connected to the grounding electrode by a single clamp or fitting unless the

clamp or fitting is listed for multiple conductors. One of the methods indicated in the following items shall be used:

1. A pipe fitting, pipe plug or other approved device screwed into a pipe or pipe fitting.
2. A listed bolted clamp of cast bronze or brass, or plain or malleable iron.
3. For indoor communications purposes only, a listed sheet metal strap-type ground clamp having a rigid metal base that seats on the electrode and having a strap of such material and dimensions that it is not likely to stretch during or after installation.
4. Other equally substantial approved means. (250.70)

E3611.2 Accessibility. All mechanical elements used to terminate a grounding electrode conductor or bonding jumper to the grounding electrodes that are not buried or concrete encased shall be accessible. [250.68(A) and 250.68(A) Exception]

E3611.3 Effective grounding path. The connection of the grounding electrode conductor or bonding jumper shall be made in a manner that will ensure a permanent and effective grounding path. Where necessary to ensure effective grounding for a metal piping system used as a grounding electrode, effective bonding shall be provided around insulated joints and sections and around any equipment that is likely to be disconnected for repairs or replacement. Bonding jumpers shall be of sufficient length to permit removal of such equipment while retaining the integrity of the grounding path. [250.68(B)]

E3611.4 Interior metal water piping. Where grounding electrode conductors and bonding jumpers are connected to interior metal water piping as a means to extend the grounding electrode conductor connection to an electrode(s), such piping shall be located not more than 5 feet (1524 mm) from the point of entry into the building.

Where interior metal water piping is used as a conductor to interconnect electrodes that are part of the grounding electrode system, such piping shall be located not more than 5 feet (1524 mm) from the point of entry into the building. [250.68(C)(1)]

E3611.5 Protection of ground clamps and fittings. Ground clamps or other fittings shall be approved for applications without protection or shall be protected from physical damage by installing them where they are not likely to be damaged or by enclosing them in metal, wood or equivalent protective coverings. (250.10)

E3611.6 Clean surfaces. Nonconductive coatings (such as paint, enamel and lacquer) on equipment to be grounded shall be removed from threads and other contact surfaces to ensure good electrical continuity or shall be connected by fittings that make such removal unnecessary. (250.12)

CHAPTER 37

BRANCH CIRCUIT AND FEEDER REQUIREMENTS

SECTION E3701
GENERAL

E3701.1 Scope. This chapter covers branch circuits and feeders and specifies the minimum required branch circuits, the allowable loads and the required overcurrent protection for branch circuits and feeders that serve less than 100 percent of the total dwelling unit load. Feeder circuits that serve 100 percent of the dwelling unit load shall be sized in accordance with the procedures in Chapter 36. [310.15(B)(7)(2)]

E3701.2 Branch-circuit and feeder ampacity. Branch-circuit and feeder conductors shall have ampacities not less than the maximum load to be served. Where a branch circuit or a feeder supplies continuous loads or any combination of continuous and noncontinuous loads, the minimum branch-circuit or feeder conductor size, before the application of any adjustment or correction factors, shall have an allowable ampacity equal to or greater than the noncontinuous load plus 125 percent of the continuous load. [210.19(A)(1)(a) and 215.2(A)(1)(a)]

Exception: The grounded conductors of feeders that are not connected to an overcurrent device shall be permitted to be sized at 100 percent of the continuous and noncontinuous load. [215.1(A)(1) Exception No. 2]

E3701.3 Selection of ampacity. Where more than one calculated or tabulated ampacity could apply for a given circuit length, the lowest value shall be used. [310.15(A)(2)]

Exception: Where two different ampacities apply to adjacent portions of a circuit, the higher ampacity shall be permitted to be used beyond the point of transition, a distance equal to 10 feet (3048 mm) or 10 percent of the circuit length figured at the higher ampacity, whichever is less. [310.15(A)(2) Exception]

E3701.4 Branch circuits with more than one receptacle. Conductors of branch circuits supplying more than one receptacle for cord-and-plug-connected portable loads shall have ampacities of not less than the rating of the branch circuit. [210.19(A)(2)]

E3701.5 Multiwire branch circuits. All conductors for multiwire branch circuits shall originate from the same panelboard or similar distribution equipment. Except where all ungrounded conductors are opened simultaneously by the branch-circuit overcurrent device, multiwire branch circuits shall supply only line-to-neutral loads or only one appliance. [210.4(A) and 210.4(C)]

E3701.5.1 Disconnecting means. Each multiwire branch circuit shall be provided with a means that will simultaneously disconnect all ungrounded conductors at the point where the branch circuit originates. [210.4(B)]

E3701.5.2 Grouping. The ungrounded and grounded circuit conductors of each multiwire branch circuit shall be grouped by cable ties or similar means in at least one location within the panelboard or other point of origination. [210.4(D)]

Exception: Grouping shall not be required where the circuit conductors enter from a cable or raceway unique to the circuit, thereby making the grouping obvious, or where the conductors are identified at their terminations with numbered wire markers corresponding to their appropriate circuit number. [210.4(D) Exception].

SECTION E3702
BRANCH CIRCUIT RATINGS

E3702.1 Branch-circuit voltage limitations. The voltage ratings of branch circuits that supply luminaires or receptacles for cord-and-plug-connected loads of up to 1,400 volt-amperes or of less than $^1/_4$ horsepower (0.186 kW) shall be limited to a maximum rating of 120 volts, nominal, between conductors.

Branch circuits that supply cord-and-plug-connected or permanently connected utilization equipment and appliances rated at over 1,440 volt-amperes or $^1/_4$ horsepower (0.186 kW) and greater shall be rated at 120 volts or 240 volts, nominal. [210.6(A), (B), and (C)]

E3702.2 Branch-circuit ampere rating. Branch circuits shall be rated in accordance with the maximum allowable ampere rating or setting of the overcurrent protection device. The rating for other than individual branch circuits shall be 15, 20, 30, 40 and 50 amperes. Where conductors of higher ampacity are used, the ampere rating or setting of the specified over-current device shall determine the circuit rating. (210.3)

E3702.3 Fifteen- and 20-ampere branch circuits. A 15- or 20-ampere branch circuit shall be permitted to supply lighting units, or other utilization equipment, or a combination of both. The rating of any one cord-and-plug-connected utilization equipment not fastened in place shall not exceed 80 percent of the branch-circuit ampere rating. The total rating of utilization equipment fastened in place, other than luminaires, shall not exceed 50 percent of the branch-circuit ampere rating where lighting units, cord-and-plug-connected utilization equipment not fastened in place, or both, are also supplied. [210.23(A)(1) and (2)]

E3702.4 Thirty-ampere branch circuits. A 30-ampere branch circuit shall be permitted to supply fixed utilization equipment. A rating of any one cord-and-plug-connected utilization equipment shall not exceed 80 percent of the branch-circuit ampere rating. [210.23(B)]

E3702.5 Branch circuits serving multiple loads or outlets. General-purpose branch circuits shall supply lighting outlets, appliances, equipment or receptacle outlets, and combinations of such. Multioutlet branch circuits serving lighting or receptacles shall be limited to a maximum branch-circuit rating of 20 amperes. [210.23(A), (B), and (C)]

E3702.6 Branch circuits serving a single motor. Branch-circuit conductors supplying a single motor shall have an ampacity not less than 125 percent of the motor full-load current rating. [430.22(A)]

E3702.7 Branch circuits serving motor-operated and combination loads. For circuits supplying loads consisting of motor-operated utilization equipment that is fastened in place and that has a motor larger than $^1/_8$ horsepower (0.093 kW) in combination with other loads, the total calculated load shall be based on 125 percent of the largest motor load plus the sum of the other loads. [220.18(A)]

E3702.8 Branch-circuit inductive and LED lighting loads. For circuits supplying luminaires having ballasts or LED drivers, the calculated load shall be based on the total ampere ratings of such units and not on the total watts of the lamps. [220.18(B)]

E3702.9 Branch-circuit load for ranges and cooking appliances. It shall be permissible to calculate the branch-circuit load for one range in accordance with Table E3704.2(2). The branch-circuit load for one wall-mounted oven or one counter-mounted cooking unit shall be the nameplate rating of the appliance. The branch-circuit load for a counter-mounted cooking unit and not more than two wall-mounted ovens all supplied from a single branch circuit and located in the same room shall be calculated by adding the nameplate ratings of the individual appliances and treating the total as equivalent to one range. (220.55 Note 4)

E3702.9.1 Minimum branch circuit for ranges. Ranges with a rating of 8.75 kVA or more shall be supplied by a branch circuit having a minimum rating of 40 amperes. [210.19(A)(3)]

E3702.10 Branch circuits serving heating loads. Electric space-heating and water-heating appliances shall be considered to be continuous loads. Branch circuits supplying two or more outlets for fixed electric space-heating equipment shall be rated 15, 20, 25 or 30 amperes. [424.3(A)]

E3702.11 Branch circuits for air-conditioning and heat pump equipment. The ampacity of the conductors supplying multimotor and combination load equipment shall be not less than the minimum circuit ampacity marked on the equipment. The branch-circuit overcurrent device rating shall be the size and type marked on the appliance. [440.4(B), 440.35, 440.62(A)]

E3702.12 Branch circuits serving room air conditioners. A room air conditioner shall be considered as a single motor unit in determining its branch-circuit requirements where all the following conditions are met:

1. It is cord- and attachment plug-connected.
2. The rating is not more than 40 amperes and 250 volts; single phase.
3. Total rated-load current is shown on the room air-conditioner nameplate rather than individual motor currents.
4. The rating of the branch-circuit short-circuit and ground-fault protective device does not exceed the ampacity of the branch-circuit conductors, or the rating of the branch-circuit conductors, or the rating of the receptacle, whichever is less. [440.62(A)]

E3702.12.1 Where no other loads are supplied. The total marked rating of a cord- and attachment plug-connected room air conditioner shall not exceed 80 percent of the rating of a branch circuit where no other appliances are also supplied. [440.62(B)]

E3702.12.2 Where lighting units or other appliances are also supplied. The total marked rating of a cord- and attachment plug-connected room air conditioner shall not exceed 50 percent of the rating of a branch circuit where lighting or other appliances are also supplied. Where the circuitry is interlocked to prevent simultaneous operation of the room air conditioner and energization of other outlets on the same branch circuit, a cord- and attachment-plug-connected room air conditioner shall not exceed 80 percent of the branch-circuit rating. [440.62(C)]

E3702.13 Electric vehicle branch circuit. Outlets installed for the purpose of charging electric vehicles shall be supplied by a separate branch circuit. Such circuit shall not supply other outlets. (210.17)

E3702.14 Branch-circuit requirement—summary. The requirements for circuits having two or more outlets, or receptacles, other than the receptacle circuits of Sections E3703.2, E3703.3 and E3703.4, are summarized in Table E3702.14. Branch circuits in dwelling units shall supply only loads within that dwelling unit or loads associated only with that dwelling unit. Branch circuits installed for the purpose of lighting, central alarm, signal, communications or other purposes for public or common areas of a two-family dwelling shall not be supplied from equipment that supplies an individual dwelling unit. (210.24 and 210.25)

TABLE E3702.14 (Table 210.24)
BRANCH-CIRCUIT REQUIREMENTS-SUMMARY[a, b]

	CIRCUIT RATING		
	15 amp	20 amp	30 amp
Conductors: Minimum size (AWG) circuit conductors	14	12	10
Maximum overcurrent-protection device rating Ampere rating	15	20	30
Outlet devices: Lampholders permitted Receptacle rating (amperes)	Any type 15 maximum	Any type 15 or 20	N/A 30
Maximum load (amperes)	15	20	30

a. These gages are for copper conductors.
b. N/A means not allowed.

SECTION E3703
REQUIRED BRANCH CIRCUITS

E3703.1 Branch circuits for heating. Central heating equipment other than fixed electric space heating shall be supplied by an individual branch circuit. Permanently connected air-conditioning equipment, and auxiliary equipment directly associated with the central heating equipment such as pumps, motorized valves, humidifiers and electrostatic air cleaners, shall not be prohibited from connecting to the same branch circuit as the central heating equipment. (422.12 and 422.12 Exceptions No. 1 and No. 2)

E3703.2 Kitchen and dining area receptacles. A minimum of two 20-ampere-rated branch circuits shall be provided to serve all wall and floor receptacle outlets located in the kitchen, pantry, breakfast area, dining area or similar area of a dwelling. The kitchen countertop receptacles shall be served by a minimum of two 20-ampere-rated branch circuits, either or both of which shall also be permitted to supply other receptacle outlets in the same kitchen, pantry, breakfast and dining area including receptacle outlets for refrigeration appliances. [210.11(C)(1) and 210.52(B)(1) and (B)(2)]

Exception: The receptacle outlet for refrigeration appliances shall be permitted to be supplied from an individual branch circuit rated 15 amperes or greater. [210.52(B)(1) Exception No. 2]

E3703.3 Laundry circuit. A minimum of one 20-ampere-rated branch circuit shall be provided for receptacles located in the laundry area and shall serve only receptacle outlets located in the laundry area. [210.11(C)(2)]

E3703.4 Bathroom branch circuits. A minimum of one 20-ampere branch circuit shall be provided to supply bathroom receptacle outlet(s). Such circuits shall have no other outlets. [210.11(C)(3)]

Exception: Where the 20-ampere circuit supplies a single bathroom, outlets for other equipment within the same bathroom shall be permitted to be supplied in accordance with Section E3702. [210.11(C)(3) Exception)

E3703.5 Number of branch circuits. The minimum number of branch circuits shall be determined from the total calculated load and the size or rating of the circuits used. The number of circuits shall be sufficient to supply the load served. In no case shall the load on any circuit exceed the maximum specified by Section E3702. [210.11(A)]

E3703.6 Branch-circuit load proportioning. Where the branch-circuit load is calculated on a volt-amperes-per-square-foot (m^2) basis, the wiring system, up to and including the branch-circuit panelboard(s), shall have the capacity to serve not less than the calculated load. This load shall be evenly proportioned among multioutlet branch circuits within the panelboard(s). Branch-circuit overcurrent devices and circuits shall only be required to be installed to serve the connected load. [210.11(B)]

SECTION E3704
FEEDER REQUIREMENTS

E3704.1 Conductor size. Feeder conductors that do not serve 100 percent of the dwelling unit load and branch-circuit conductors shall be of a size sufficient to carry the load as determined by this chapter. Feeder conductors shall not be required to be larger than the service-entrance conductors that supply the dwelling unit. The load for feeder conductors that serve as the main power feeder to a dwelling unit shall be determined as specified in Chapter 36 for services. [310.15(B)(7)(2) and (3)]

E3704.2 Feeder loads. The minimum load in volt-amperes shall be calculated in accordance with the load calculation procedure prescribed in Table E3704.2(1). The associated table demand factors shall be applied to the actual load to determine the minimum load for feeders. (220.40)

E3704.3 Feeder neutral load. The feeder neutral load shall be the maximum unbalance of the load determined in accordance with this chapter. The maximum unbalanced load shall be the maximum net calculated load between the neutral and any one ungrounded conductor. For a feeder or service supplying electric ranges, wall-mounted ovens, counter-mounted

TABLE E3704.2(1)
(Table 220.12, 220.14, Table 220.42, 220.50, 220.51, 220.52, 220.53, 220.54, 220.55, and 220.60)
FEEDER LOAD CALCULATION

LOAD CALCULATION PROCEDURE	APPLIED DEMAND FACTOR
Lighting and receptacles: A unit load of not less than 3 VA per square foot of total floor area shall constitute the lighting and 120-volt, 15- and 20-ampere general use receptacle load. 1,500 VA shall be added for each 20-ampere branch circuit serving receptacles in the kitchen, dining room, pantry, breakfast area and laundry area.	100 percent of first 3,000 VA or less and 35 percent of that in excess of 3,000 VA.
Plus	
Appliances and motors: The nameplate rating load of all fastened-in-place appliances other than dryers, ranges, air-conditioning and space-heating equipment.	100 percent of load for three or less appliances. 75 percent of load for four or more appliances.
Plus	
Fixed motors: Full-load current of motors plus 25 percent of the full load current of the largest motor.	
Plus	
Electric clothes dryer: The dryer load shall be 5,000 VA for each dryer circuit or the nameplate rating load of each dryer, whichever is greater.	
Plus	
Cooking appliances: The nameplate rating of ranges, wall-mounted ovens, counter-mounted cooking units and other cooking appliances rated in excess of 1.75 kVA shall be summed.	Demand factors shall be as allowed by Table E3704.2(2).
Plus the largest of either the heating or cooling load	
Largest of the following two selections: 1.100 percent of the nameplate rating(s) of the air conditioning and cooling, including heat pump compressors. 2.100 percent of the fixed electric space heating.	

For SI: 1 square foot = 0.0929 m^2.

TABLE E3704.2(2) (220.55 and Table 220.55)
DEMAND LOADS FOR ELECTRIC RANGES, WALL-MOUNTED OVENS, COUNTER-MOUNTED COOKING UNITS AND OTHER COOKING APPLIANCES OVER $1^3/_4$ kVA RATING[a, b]

NUMBER OF APPLIANCES	MAXIMUM DEMAND[b, c]	DEMAND FACTORS (percent)[d]	
	Column A maximum 12 kVA rating	Column B less than $3^1/_2$ kVA rating	Column C $3^1/_2$ to $8^3/_4$ kVA rating
1	8 kVA	80	80
2	11 kVA	75	65

a. Column A shall be used in all cases except as provided for in Footnote d.

b. For ranges all having the same rating and individually rated more than 12 kVA but not more than 27 kVA, the maximum demand in Column A shall be increased 5 percent for each additional kVA of rating or major fraction thereof by which the rating of individual ranges exceeds 12 kVA.

c. For ranges of unequal ratings and individually rated more than 8.75 kVA, but none exceeding 27 kVA, an average value of rating shall be computed by adding together the ratings of all ranges to obtain the total connected load (using 12 kVA for any ranges rated less than 12 kVA) and dividing by the total number of ranges; and then the maximum demand in Column A shall be increased 5 percent for each kVA or major fraction thereof by which this average value exceeds 12 kVA.

d. Over 1.75 kVA through 8.75 kVA. As an alternative to the method provided in Column A, the nameplate ratings of all ranges rated more than 1.75 kVA but not more than 8.75 kVA shall be added and the sum shall be multiplied by the demand factor specified in Column B or C for the given number of appliances.

cooking units and electric dryers, the maximum unbalanced load shall be considered as 70 percent of the load on the ungrounded conductors. [220.61(A) and (B)]

E3704.4 Lighting and general use receptacle load. A unit load of not less than 3 volt-amperes shall constitute the minimum lighting and general use receptacle load for each square foot of floor area (33 VA for each square meter of floor area). The floor area for each floor shall be calculated from the outside dimensions of the building. The calculated floor area shall not include open porches, garages, or unused or unfinished spaces not adaptable for future use. [220.12, Table 220.12, and 220.14(J)]

E3704.5 Ampacity and calculated loads. The calculated load of a feeder shall be not less than the sum of the loads on the branch circuits supplied, as determined by Section E3704, after any applicable demand factors permitted by Section E3704 have been applied. (220.40)

E3704.6 Equipment grounding conductor. Where a feeder supplies branch circuits in which equipment grounding conductors are required, the feeder shall include or provide an equipment grounding conductor that is one or more or a combination of the types specified in Section E3908.8, to which the equipment grounding conductors of the branch circuits shall be connected. Where the feeder supplies a separate building or structure, the requirements of Section E3607.3.1 shall apply. (215.6)

SECTION E3705
CONDUCTOR SIZING AND OVERCURRENT PROTECTION

E3705.1 General. Ampacities for conductors shall be determined based in accordance with Table E3705.1 and Sections E3705.2 and E3705.3. [310.15(A)]

E3705.2 Correction factor for ambient temperatures. For ambient temperatures other than 30°C (86°F), multiply the allowable ampacities specified in Table E3705.1 by the appropriate correction factor shown in Table E3705.2. [310.15(B)(2)]

E3705.3 Adjustment factor for conductor proximity. Where the number of current-carrying conductors in a raceway or cable exceeds three, or where single conductors or multiconductor cables are stacked or bundled for distances greater than 24 inches (610 mm) without maintaining spacing and are not installed in raceways, the allowable ampacity of each conductor shall be reduced as shown in Table E3705.3. [310.15(B)(3)]

Exceptions:

1. Adjustment factors shall not apply to conductors in nipples having a length not exceeding 24 inches (610 mm). [310.15(B)(3)(2)]
2. Adjustment factors shall not apply to underground conductors entering or leaving an outdoor trench if those conductors have physical protection in the form of rigid metal conduit, intermediate metal conduit, or rigid nonmetallic conduit having a length not exceeding 10 feet (3048 mm) and the number of conductors does not exceed four.[310.15(B)(3)(3)]
3. Adjustment factors shall not apply to type AC cable or to type MC cable without an overall outer jacket meeting all of the following conditions:
   - 3.1. Each cable has not more than three current-carrying conductors.
   - 3.2. The conductors are 12 AWG copper.
   - 3.3. Not more than 20 current-carrying conductors are bundled, stacked or supported on bridle rings. [310.15(B)(3)(4)]
4. An adjustment factor of 60 percent shall be applied to Type AC cable and Type MC cable where all of the following conditions apply:
   - 4.1. The cables do not have an overall outer jacket.
   - 4.2. The number of current-carrying conductors exceeds 20.
   - 4.3. The cables are stacked or bundled longer than 24 inches (607 mm) without spacing being maintained. [310.15(B)(3)(5)]

TABLE E3705.1
ALLOWABLE AMPACITIES

CONDUCTOR SIZE	CONDUCTOR TEMPERATURE RATING						CONDUCTOR SIZE
	60°C	75°C	90°C	60°C	75°C	90°C	
AWG kcmil	Types TW, UF	Types RHW, THHW, THW, THWN, USE, XHHW	Types RHW-2, THHN, THHW, THW-2, THWN-2, XHHW, XHHW-2, USE-2	Types TW, UF	Types RHW, THHW, THW, THWN, USE, XHHW	Types RHW-2, THHN, THHW, THW-2, THWN-2, XHHW, XHHW-2, USE-2	AWG kcmil
	Copper			Aluminum or copper-clad aluminum			
14[a]	15	20	25	—	—	—	—
12[a]	20	25	30	15	20	25	12[a]
10[a]	30	35	40	25	30	35	10[a]
8	40	50	55	35	40	45	8
6	55	65	75	40	50	55	6
4	70	85	95	55	65	75	4
3	85	100	115	65	75	85	3
2	95	115	130	75	90	100	2
1	110	130	145	85	100	115	1
1/0	125	150	170	100	120	135	1/0
2/0	145	175	195	115	135	150	2/0
3/0	165	200	225	130	155	175	3/0
4/0	195	230	260	150	180	205	4/0
250	215	255	290	170	205	230	250
300	240	285	320	195	230	260	300
350	260	310	350	210	250	280	350
400	280	335	380	225	270	305	400
500	320	380	430	260	310	350	500
600	350	420	475	285	340	385	600
700	385	460	520	315	375	425	700
750	400	475	535	320	385	435	750
800	410	490	555	330	395	445	800
900	435	520	585	355	425	480	900

For SI: °C = [(°F) - 32]/1.8.

a. See Table E3705.5.3 for conductor overcurrent protection limitations.

TABLE E3705.2 [Table 310.15(B)(2)(a)]
AMBIENT TEMPERATURE CORRECTION FACTORS

For ambient temperatures other than 30°C (86°F), multiply the allowable ampacities specified in the ampacity tables by the appropriate correction factor shown below.

Ambient Temperature (°C)	Temperature Rating of Conductor			Ambient Temperature (°F)
	60°C	75°C	90°C	
10 or less	1.29	1.20	1.15	50 or less
11-15	1.22	1.15	1.12	51-59
16-20	1.15	1.11	1.08	60-68
21-25	1.08	1.05	1.04	69-77
26-30	1.00	1.00	1.00	78-86
31-35	0.91	0.94	0.96	87-95
36-40	0.82	0.88	0.91	96-104
41-45	0.71	0.82	0.87	105-113
46-50	0.58	0.75	0.82	114-122
51-55	0.41	0.67	0.76	123-131
56-60	—	0.58	0.71	132-140
61-65	—	0.47	0.65	141-149
66-70	—	0.33	0.58	150-158
71-75	—	—	0.50	159-167
76-80	—	—	0.41	168-176
81-85	—	—	0.29	177-185

For SI: 1 °C = [(°F) - 32]/1.8.

TABLE E3705.3 [Table 310.15(B)(3)(a)]
CONDUCTOR PROXIMITY ADJUSTMENT FACTORS

NUMBER OF CURRENT-CARRYING CONDUCTORS IN CABLE OR RACEWAY	PERCENT OF VALUES IN TABLE E3705.1
4-6	80
7-9	70
10-20	50
21-30	45
31-40	40
41 and above	35

E3705.4 Temperature limitations. The temperature rating associated with the ampacity of a conductor shall be so selected and coordinated to not exceed the lowest temperature rating of any connected termination, conductor or device. Conductors with temperature ratings higher than specified for terminations shall be permitted to be used for ampacity adjustment, correction, or both. Except where the equipment is marked otherwise, conductor ampacities used in determining equipment termination provisions shall be based on Table E3705.1. [110.14(C)]

E3705.4.1 Conductors rated 60°C. Except where the equipment is marked otherwise, termination provisions of equipment for circuits rated 100 amperes or less, or marked for 14 AWG through 1 AWG conductors, shall be used only for one of the following:

1. Conductors rated 60°C (140°F);
2. Conductors with higher temperature ratings, provided that the ampacity of such conductors is determined based on the 60°C (140°F) ampacity of the conductor size used;
3. Conductors with higher temperature ratings where the equipment is listed and identified for use with such conductors; or
4. For motors marked with design letters B, C, or D conductors having an insulation rating of 75°C (167°F) or higher shall be permitted to be used provided that the ampacity of such conductors does not exceed the 75°C (167°F) ampacity. [110.14(C)(1)(a)]

E3705.4.2 Conductors rated 75°C. Termination provisions of equipment for circuits rated over 100 amperes, or marked for conductors larger than 1 AWG, shall be used only for:

1. Conductors rated 75°C (167°F).
2. Conductors with higher temperature ratings provided that the ampacity of such conductors does not exceed the 75°C (167°F) ampacity of the conductor size used, or provided that the equipment is listed and identified for use with such conductors. [110.14(C)(1)(b)]

E3705.4.3 Separately installed pressure connectors. Separately installed pressure connectors shall be used with conductors at the ampacities not exceeding the ampacity at the listed and identified temperature rating of the connector. [110.14(C)(2)]

E3705.4.4 Conductors of Type NM cable. Conductors in NM cable assemblies shall be rated at 90°C (194°F). Types NM, NMC, and NMS cable identified by the markings NM-B, NMC-B, and NMS-B meet this requirement. The allowable ampacity of Types NM, NMC, and NMS cable shall not exceed that of 60°C (140°F) rated conductors and shall comply with Section E3705.1 and Table E3705.5.3. The 90°C (194°F) rating shall be permitted to be used for ampacity adjustment and calculations provided that the final corrected or adjusted ampacity does not exceed that for a 60°C (140°F) rated conductor. Where more than two NM cables containing two or more current-carrying conductors are installed, without maintaining spacing between the cables, through the same opening in wood framing that is to be sealed with thermal insulation, caulk or sealing foam, the allowable ampacity of each conductor shall be adjusted in accordance with Table E3705.3. Where more than two NM cables containing two or more current-carrying conductors are installed in contact with thermal insulation without maintaining spacing between cables, the allowable ampacity of each conductor shall be adjusted in accordance with Table E3705.3. (334.80 and 334.112)

E3705.4.5 Conductors of Type SE cable. Where used as a branch circuit or feeder wiring method within the interior of a building and installed in thermal insulation, the ampacity of the conductors in Type SE cable assemblies shall be in accordance with the 60°C (140°F) conductor temperature rating. The maximum conductor temperature rating shall be permitted to be used for ampacity adjustment and correction purposes, provided that the final derated ampacity does not exceed that for a 60°C (140°F) rated conductor. [338.10(B)(4)(a)]

E3705.5 Overcurrent protection required. All ungrounded branch-circuit and feeder conductors shall be protected against overcurrent by an overcurrent device installed at the point where the conductors receive their supply. Overcurrent devices shall not be connected in series with a grounded conductor. Overcurrent protection and allowable loads for branch circuits and for feeders that do not serve as the main power feeder to the dwelling unit load shall be in accordance with this chapter.

Branch-circuit conductors and equipment shall be protected by overcurrent protective devices having a rating or setting not exceeding the allowable ampacity specified in Table E3705.1 and Sections E3705.2, E3705.3 and E3705.4 except where otherwise permitted or required in Sections E3705.5.1 through E3705.5.3. [240.4, 240.21, and 310.15(B)(7)(2)]

E3705.5.1 Cords. Cords shall be protected in accordance with Section E3909.2. [240.5(B)]

E3705.5.2 Overcurrent devices of the next higher rating. The next higher standard overcurrent device rating, above the ampacity of the conductors being protected, shall be permitted to be used, provided that all of the following conditions are met:

1. The conductors being protected are not part of a branch circuit supplying more than one receptacle for cord- and plug-connected portable loads.

2. The ampacity of conductors does not correspond with the standard ampere rating of a fuse or a circuit breaker without overload trip adjustments above its rating (but that shall be permitted to have other trip or rating adjustments).
3. The next higher standard device rating does not exceed 400 amperes. [240.4(B)]

E3705.5.3 Small conductors. Except as specifically permitted by Section E3705.5.4, the rating of overcurrent protection devices shall not exceed the ratings shown in Table E3705.5.3 for the conductors specified therein. [240.4(D)]

TABLE E3705.5.3 [240.4(D)]
OVERCURRENT-PROTECTION RATING

COPPER		ALUMINUM OR COPPER-CLAD ALUMINUM	
Size (AWG)	Maximum overcurrent-protection-device rating[a] (amps)	Size (AWG)	Maximum overcurrent-protection-device rating[a] (amps)
14	15	12	15
12	20	10	25
10	30	8	30

a. The maximum overcurrent-protection-device rating shall not exceed the conductor allowable ampacity determined by the application of the correction and adjustment factors in accordance with Sections E3705.2 and E3705.3.

E3705.5.4 Air-conditioning and heat pump equipment. Air-conditioning and heat pump equipment circuit conductors shall be permitted to be protected against overcurrent in accordance with Section E3702.11. [240.4(G)]

E3705.6 Fuses and fixed trip circuit breakers. The standard ampere ratings for fuses and inverse time circuit breakers shall be considered 15, 20, 25, 30, 35, 40, 45, 50, 60, 70, 80, 90, 100, 110, 125, 150, 175, 200, 225, 250, 300, 350 and 400 amperes. (240.6)

E3705.7 Location of overcurrent devices in or on premises. Overcurrent devices shall:

1. Be readily accessible. [240.24(A)]
2. Not be located where they will be exposed to physical damage. [240.24(C)]
3. Not be located where they will be in the vicinity of easily ignitible material such as in clothes closets. [240.24(D)]
4. Not be located in bathrooms. [240.24(E)]
5. Not be located over steps of a stairway.
6. Be installed so that the center of the grip of the operating handle of the switch or circuit breaker, when in its highest position, is not more than 6 feet 7 inches (2007 mm) above the floor or working platform. [240.24(A)]

Exceptions:

1. This section shall not apply to supplementary overcurrent protection that is integral to utilization equipment. [240.24(A)(2)]
2. Overcurrent devices installed adjacent to the utilization equipment that they supply shall be permitted to be accessible by portable means. [240.24(A)(4)]

E3705.8 Ready access for occupants. Each occupant shall have ready access to all overcurrent devices protecting the conductors supplying that occupancy. [240.24(B)]

E3705.9 Enclosures for overcurrent devices. Overcurrent devices shall be enclosed in cabinets, cutout boxes, or equipment assemblies. The operating handle of a circuit breaker shall be permitted to be accessible without opening a door or cover. [240.30(A) and (B)]

SECTION E3706
PANELBOARDS

E3706.1 Panelboard rating. All panelboards shall have a rating not less than that of the minimum service or feeder capacity required for the calculated load. (408.30)

E3706.2 Panelboard circuit identification. All circuits and circuit modifications shall be legibly identified as to their clear, evident, and specific purpose or use. The identification shall include an approved degree of detail that allows each circuit to be distinguished from all others. Spare positions that contain unused overcurrent devices or switches shall be described accordingly. The identification shall be included in a circuit directory located on the face of the panelboard enclosure or inside the panel door. Circuits shall not be described in a manner that depends on transient conditions of occupancy. [408.4(A)]

E3706.3 Panelboard overcurrent protection. In addition to the requirement of Section E3706.1, a panelboard shall be protected by an overcurrent protective device having a rating not greater than that of the panelboard. Such overcurrent protective device shall be located within or at any point on the supply side of the panelboard. (408.36)

E3706.4 Grounded conductor terminations. Each grounded conductor shall terminate within the panelboard on an individual terminal that is not also used for another conductor, except that grounded conductors of circuits with parallel conductors shall be permitted to terminate on a single terminal where the terminal is identified for connection of more than one conductor. (408.41 and 408.41 Exception)

E3706.5 Back-fed devices. Plug-in-type overcurrent protection devices or plug-in-type main lug assemblies that are back-fed and used to terminate field-installed ungrounded supply conductors shall be secured in place by an additional fastener that requires other than a pull to release the device from the mounting means on the panel. [408.36(D)]

CHAPTER 38

WIRING METHODS

SECTION E3801
GENERAL REQUIREMENTS

E3801.1 Scope. This chapter covers the wiring methods for services, feeders and branch circuits for electrical power and distribution. (300.1)

E3801.2 Allowable wiring methods. The allowable wiring methods for electrical installations shall be those listed in Table E3801.2. Single conductors shall be used only where part of one of the recognized wiring methods listed in Table E3801.2. As used in this code, abbreviations of the wiring-method types shall be as indicated in Table E3801.2. [110.8, 300.3(A)]

TABLE E3801.2
ALLOWABLE WIRING METHODS

ALLOWABLE WIRING METHOD	DESIGNATED ABBREVIATION
Armored cable	AC
Electrical metallic tubing	EMT
Electrical nonmetallic tubing	ENT
Flexible metal conduit	FMC
Intermediate metal conduit	IMC
Liquidtight flexible conduit	LFC
Metal-clad cable	MC
Nonmetallic sheathed cable	NM
Rigid polyvinyl chloride conduit (Type PVC)	RNC
Rigid metallic conduit	RMC
Service entrance cable	SE
Surface raceways	SR
Underground feeder cable	UF
Underground service cable	USE

E3801.3 Circuit conductors. All conductors of a circuit, including equipment grounding conductors and bonding conductors, shall be contained in the same raceway, trench, cable or cord. [300.3(B)]

E3801.4 Wiring method applications. Wiring methods shall be applied in accordance with Table E3801.4. (Chapter 3 and 300.2)

SECTION E3802
ABOVE-GROUND INSTALLATION REQUIREMENTS

E3802.1 Installation and support requirements. Wiring methods shall be installed and supported in accordance with Table E3802.1. (Chapter 3 and 300.11)

E3802.2 Cables in accessible attics. Cables in attics or roof spaces provided with access shall be installed as specified in Sections E3802.2.1 and E3802.2.2. (320.3 and 334.23)

E3802.2.1 Across structural members. Where run across the top of floor joists, or run within 7 feet (2134 mm) of floor or floor joists across the face of rafters or studding, in attics and roof spaces that are provided with access, the cable shall be protected by substantial guard strips that are at least as high as the cable. Where such spaces are not provided with access by permanent stairs or ladders, protection shall only be required within 6 feet (1829 mm) of the nearest edge of the attic entrance. [330.23(A) and 334.23]

E3802.2.2 Cable installed through or parallel to framing members. Where cables are installed through or parallel to the sides of rafters, studs or floor joists, guard strips and running boards shall not be required, and the installation shall comply with Table E3802.1. [330.23(B) and 334.23]

E3802.3 Exposed cable. In exposed work, except as provided for in Sections E3802.2 and E3802.4, cable assemblies shall be installed as specified in Sections E3802.3.1 and E3802.3.2. (330.15 and 334.15)

E3802.3.1 Surface installation. Cables shall closely follow the surface of the building finish or running boards. [334.15(A)]

E3802.3.2 Protection from physical damage. Where subject to physical damage, cables shall be protected by rigid metal conduit, intermediate metal conduit, electrical metallic tubing, Schedule 80 PVC rigid nonmetallic conduit, or other approved means. Where passing through a floor, the cable shall be enclosed in rigid metal conduit, intermediate metal conduit, electrical metallic tubing, Schedule 80 PVC rigid nonmetallic conduit or other approved means extending not less than 6 inches (152 mm) above the floor. [334.15(B)]

E3802.3.3 Locations exposed to direct sunlight. Insulated conductors and cables used where exposed to direct rays of the sun shall be listed or listed and marked, as being "sunlight resistant," or shall be covered with insulating material, such as tape or sleeving, that is listed or listed and marked as being "sunlight resistant." [310.10(D)]

E3802.4 In unfinished basements and crawl spaces. Where type NM or SE cable is run at angles with joists in unfinished basements and crawl spaces, cable assemblies containing two or more conductors of sizes 6 AWG and larger and assemblies containing three or more conductors of sizes 8 AWG and larger shall not require additional protection where attached directly to the bottom of the joists. Smaller cables shall be run either through bored holes in joists or on running boards. Type NM or SE cable installed on the wall of an unfinished basement shall be permitted to be installed in a listed conduit or tubing or shall be protected in accordance with Table E3802.1. Conduit or tubing shall be provided with a suitable insulating bushing or adapter at the point where the

cable enters the raceway. The sheath of the Type NM or SE cable shall extend through the conduit or tubing and into the outlet or device box not less than $^1/_4$ inch (6.4 mm). The cable shall be secured within 12 inches (305 mm) of the point where the cable enters the conduit or tubing. Metal conduit, tubing, and metal outlet boxes shall be connected to an equipment grounding conductor complying with Section E3908.13. [334.15(C)]

E3802.5 Bends. Bends shall be made so as not to damage the wiring method or reduce the internal diameter of raceways.

For types NM and SE cable, bends shall be so made, and other handling shall be such that the cable will not be damaged and the radius of the curve of the inner edge of any bend shall be not less than five times the diameter of the cable. (334.24 and 338.24)

E3802.6 Raceways exposed to different temperatures. Where portions of a raceway or sleeve are known to be subjected to different temperatures and where condensation is known to be a problem, as in cold storage areas of buildings or where passing from the interior to the exterior of a building, the raceway or sleeve shall be filled with an approved material to prevent the circulation of warm air to a colder section of the raceway or sleeve. [300.7(A)]

E3802.7 Raceways in wet locations above grade. Where raceways are installed in wet locations above grade, the interior of such raceways shall be considered to be a wet location. Insulated conductors and cables installed in raceways in wet locations above grade shall be listed for use in wet locations. (300.9)

TABLE E3801.4 (Chapter 3 and 300.2)
ALLOWABLE APPLICATIONS FOR WIRING METHODS[a, b, c, d, e, f, g, h, i, j, k]

ALLOWABLE APPLICATIONS (application allowed where marked with an "A")	AC	EMT	ENT	FMC	IMC RMC RNC	LFC[a, g]	MC	NM	SR	SE	UF	USE
Services	—	A	A[h]	A[i]	A	A[i]	A	—	—	A	—	A
Feeders	A	A	A	A	A	A	A	A	—	A[b]	A	A[b]
Branch circuits	A	A	A	A	A	A	A	A	A	A[c]	A	—
Inside a building	A	A	A	A	A	A	A	A	A	A	A	—
Wet locations exposed to sunlight	—	A	A[h]	—	A	A	A	—	—	A	A[e]	A[e]
Damp locations	—	A	A	A[d]	A	A	A	—	—	A	A	A
Embedded in noncinder concrete in dry location	—	A	A	—	A	A[j]	—	—	—	—	—	—
In noncinder concrete in contact with grade	—	A[f]	A	—	A[f]	A[j]	—	—	—	—	—	—
Embedded in plaster not exposed to dampness	A	A	A	A	A	A	A	—	—	A	A	—
Embedded in masonry	—	A	A	—	A[f]	A	A	—	—	—	—	—
In masonry voids and cells exposed to dampness or below grade line	—	A[f]	A	A[d]	A[f]	A	A	—	—	A	A	—
Fished in masonry voids	A	—	—	A	—	A	A	A	—	A	A	—
In masonry voids and cells not exposed to dampness	A	A	A	A	A	A	A	A	—	A	A	—
Run exposed	A	A	A	A	A	A	A	A	A	A	A	—
Run exposed and subject to physical damage	—	—	—	—	A[g]	—	—	—	—	—	—	—
For direct burial	—	A[f]	—	—	A[f]	A	A[f]	—	—	—	A	A

For SI: 1 foot = 304.8 mm.

a. Liquid-tight flexible nonmetallic conduit without integral reinforcement within the conduit wall shall not exceed 6 feet in length.
b. Type USE cable shall not be used inside buildings.
c. The grounded conductor shall be insulated.
d. Conductors shall be a type approved for wet locations and the installation shall prevent water from entering other raceways.
e. Shall be listed as "Sunlight Resistant."
f. Metal raceways shall be protected from corrosion and approved for the application. Aluminum RMC requires approved supplementary corrosion protection.
g. RNC shall be Schedule 80.
h. Shall be listed as "Sunlight Resistant" where exposed to the direct rays of the sun.
i. Conduit shall not exceed 6 feet in length.
j. Liquid-tight flexible nonmetallic conduit is permitted to be encased in concrete where listed for direct burial and only straight connectors listed for use with LFNC are used.
k. In wet locations under any of the following conditions:
   1. The metallic covering is impervious to moisture.
   2. A lead sheath or moisture-impervious jacket is provided under the metal covering.
   3. The insulated conductors under the metallic covering are listed for use in wet locations and a corrosion-resistant jacket is provided over the metallic sheath.

TABLE E3802.1 (Chapter 3)
GENERAL INSTALLATION AND SUPPORT REQUIREMENTS FOR WIRING METHODS[a, b, c, d, e, f, g, h, i, j, k]

INSTALLATION REQUIREMENTS (Requirement applicable only to wiring methods marked "A")	AC MC	EMT IMC RMC	ENT	FMC LFC	NM UF	RNC	SE	SR[a]	USE
Where run parallel with the framing member or furring strip, the wiring shall be not less than $1^1/_4$ inches from the edge of a furring strip or a framing member such as a joist, rafter or stud or shall be physically protected.	A	—	A	A	A	—	A	—	—
Bored holes in framing members for wiring shall be located not less than $1^1/_4$ inches from the edge of the framing member or shall be protected with a minimum 0.0625-inch steel plate or sleeve, a listed steel plate or other physical protection.	A[k]	—	A[k]	A[k]	A[k]	—	A[k]	—	—
Where installed in grooves, to be covered by wallboard, siding, paneling, carpeting, or similar finish, wiring methods shall be protected by 0.0625-inch-thick steel plate, sleeve, or equivalent, a listed steel plate or by not less than $1^1/_4$-inch free space for the full length of the groove in which the cable or raceway is installed.	A	—	A	A	A	—	A	A	A
Securely fastened bushings or grommets shall be provided to protect wiring run through openings in metal framing members.	—	—	A[j]	—	A[j]	—	A[j]	—	—
The maximum number of 90-degree bends shall not exceed four between junction boxes.	—	A	A	A	—	A	—	—	—
Bushings shall be provided where entering a box, fitting or enclosure unless the box or fitting is designed to afford equivalent protection.	A	A	A	A	—	A	—	A	—
Ends of raceways shall be reamed to remove rough edges.	—	A	A	A	—	A	—	A	—
Maximum allowable on center support spacing for the wiring method in feet.	4.5[b, c]	10[l]	3[b]	4.5[b]	4.5[i]	3[d, l]	2.5[e]	—	2.5
Maximum support distance in inches from box or other terminations.	12[b, f]	36	36	12[b, g]	12[h, i]	36	12	—	—

For SI: 1 inch = 25.4 mm, 1 foot = 304.8 mm, 1 degree = 0.0175 rad.

a. Installed in accordance with listing requirements.
b. Supports not required in accessible ceiling spaces between light fixtures where lengths do not exceed 6 feet.
c. Six feet for MC cable.
d. Five feet for trade sizes greater than 1 inch.
e. Two and one-half feet where used for service or outdoor feeder and 4.5 feet where used for branch circuit or indoor feeder.
f. Twenty-four inches for Type AC cable and thirty-six inches for interlocking Type MC cable where flexibility is necessary.
g. Where flexibility after installation is necessary, lengths of flexible metal conduit and liquidtight flexible metal conduit measured from the last point where the raceway is securely fastened shall not exceed: 36 inches for trade sizes $^1/_2$ through $1^1/_4$, 48 inches for trade sizes $1^1/_2$ through 2 and 5 feet for trade sizes $2^1/_2$ and larger.
h. Within 8 inches of boxes without cable clamps.
i. Flat cables shall not be stapled on edge.
j. Bushings and grommets shall remain in place and shall be listed for the purpose of cable protection.
k. See Sections R502.8 and R802.7 for additional limitations on the location of bored holes in horizontal framing members.

SECTION E3803
UNDERGROUND INSTALLATION REQUIREMENTS

E3803.1 Minimum cover requirements. Direct buried cable or raceways shall be installed in accordance with the minimum cover requirements of Table E3803.1. [300.5(A)]

E3803.2 Warning ribbon. Underground service conductors that are not encased in concrete and that are buried 18 inches (457 mm) or more below grade shall have their location identified by a warning ribbon that is placed in the trench not less than 12 inches (305 mm) above the underground installation. [300.5(D)(3)]

E3803.3 Protection from damage. Direct buried conductors and cables emerging from the ground shall be protected by enclosures or raceways extending from the minimum cover distance below grade required by Section E3803.1 to a point at least 8 feet (2438 mm) above finished grade. In no case shall the protection be required to exceed 18 inches (457 mm) below finished grade. Conductors entering a building shall be protected to the point of entrance. Where the enclosure or raceway is subject to physical damage, the conductors shall be installed in rigid metal conduit, intermediate metal conduit, Schedule 80 rigid nonmetallic conduit or the equivalent. [300.5(D)(1)]

E3803.4 Splices and taps. Direct buried conductors or cables shall be permitted to be spliced or tapped without the use of splice boxes. The splices or taps shall be made by approved methods with materials listed for the application. [300.5(E)]

E3803.5 Backfill. Backfill containing large rock, paving materials, cinders, large or sharply angular substances, or corrosive material shall not be placed in an excavation where such materials cause damage to raceways, cables or other substructures or prevent adequate compaction of fill or contribute to corrosion of raceways, cables or other substructures. Where necessary to prevent physical damage to the raceway or cable, protection shall be provided in the form of granular or selected material, suitable boards, suitable sleeves or other approved means. [300.5(F)]

E3803.6 Raceway seals. Conduits or raceways shall be sealed or plugged at either or both ends where moisture will enter and contact live parts. [300.5(G)]

E3803.7 Bushing. A bushing, or terminal fitting, with an integral bushed opening shall be installed on the end of a conduit or other raceway that terminates underground where the conductors or cables emerge as a direct burial wiring method. A seal incorporating the physical protection characteristics of a bushing shall be considered equivalent to a bushing. [300.5(H)]

E3803.8 Single conductors. All conductors of the same circuit and, where present, the grounded conductor and all equipment grounding conductors shall be installed in the same raceway or shall be installed in close proximity in the same trench. [300.5(I)]

Exception: Conductors shall be permitted to be installed in parallel in raceways, multiconductor cables, and direct-buried single conductor cables. Each raceway or multiconductor cable shall contain all conductors of the same circuit, including equipment grounding conductors. Each direct-buried single conductor cable shall be located in close proximity in the trench to the other single conductor cables in the same parallel set of conductors in the circuit, including equipment grounding conductors. [300.5(I) Exception No.1]

TABLE E3803.1 (Table 300.5)
MINIMUM COVER REQUIREMENTS, BURIAL IN INCHES[a, b, c, d, e]

LOCATION OF WIRING METHOD OR CIRCUIT	TYPE OF WIRING METHOD OR CIRCUIT				
	1 Direct burial cables or conductors	2 Rigid metal conduit or intermediate metal conduit	3 Nonmetallic raceways listed for direct burial without concrete encasement or other approved raceways	4 Residential branch circuits rated 120 volts or less with GFCI protection and maximum overcurrent protection of 20 amperes	5 Circuits for control of irrigation and landscape lighting limited to not more than 30 volts and installed with type UF or in other identified cable or raceway
All locations not specified below	24	6	18	12	6
In trench below 2-inch-thick concrete or equivalent	18	6	12	6	6
Under a building	0 (In raceway only or Type MC identified for direct burial)	0	0	0 (In raceway only or Type MC identified for direct burial)	0 (In raceway only or Type MC identified for direct burial)
Under minimum of 4-inch-thick concrete exterior slab with no vehicular traffic and the slab extending not less than 6 inches beyond the underground installation	18	4	4	6 (Direct burial) 4 (In raceway)	6 (Direct burial) 4 (In raceway)
Under streets, highways, roads, alleys, driveways and parking lots	24	24	24	24	24
One- and two-family dwelling driveways and outdoor parking areas, and used only for dwelling-related purposes	18	18	18	12	18
In solid rock where covered by minimum of 2 inches concrete extending down to rock	2 (In raceway only)	2	2	2 (In raceway only)	2 (In raceway only)

For SI: 1 inch = 25.4 mm.

a. Raceways approved for burial only where encased concrete shall require concrete envelope not less than 2 inches thick.

b. Lesser depths shall be permitted where cables and conductors rise for terminations or splices or where access is otherwise required.

c. Where one of the wiring method types listed in columns 1 to 3 is combined with one of the circuit types in columns 4 and 5, the shallower depth of burial shall be permitted.

d. Where solid rock prevents compliance with the cover depths specified in this table, the wiring shall be installed in metal or nonmetallic raceway permitted for direct burial. The raceways shall be covered by a minimum of 2 inches of concrete extending down to the rock.

e. Cover is defined as the shortest distance in inches (millimeters) measured between a point on the top surface of any direct-buried conductor, cable, conduit or other raceway and the top surface of finished grade, concrete, or similar cover.

E3803.9 Earth movement. Where direct buried conductors, raceways or cables are subject to movement by settlement or frost, direct buried conductors, raceways or cables shall be arranged to prevent damage to the enclosed conductors or to equipment connected to the raceways. [300.5(J)]

E3803.10 Wet locations. The interior of enclosures or raceways installed underground shall be considered to be a wet location. Insulated conductors and cables installed in such enclosures or raceways in underground installations shall be listed for use in wet locations. Connections or splices in an underground installation shall be approved for wet locations. [300.5(B)]

E3803.11 Under buildings. Underground cable and conductors installed under a building shall be in a raceway. [300.5(C)]

Exception: Type MC Cable shall be permitted under a building without installation in a raceway where the cable is listed and identified for direct burial or concrete encasement and one or more of the following applies:

1. The metallic covering is impervious to moisture.
2. A moisture-impervious jacket is provided under the metal covering.
3. The insulated conductors under the metallic covering are listed for use in wet locations, and a corrosion-resistant jacket is provided over the metallic sheath. [300.5(C) Exception No.2]

CHAPTER 39

POWER AND LIGHTING DISTRIBUTION

SECTION E3901
RECEPTACLE OUTLETS

E3901.1 General. Outlets for receptacles rated at 125 volts, 15- and 20-amperes shall be provided in accordance with Sections E3901.2 through E3901.11. Receptacle outlets required by this section shall be in addition to any receptacle that is:

1. Part of a luminaire or appliance;
2. Located within cabinets or cupboards;
3. Controlled by a wall switch in accordance with Section E3903.2, Exception 1; or
4. Located over 5.5 feet (1676 mm) above the floor.

Permanently installed electric baseboard heaters equipped with factory-installed receptacle outlets, or outlets provided as a separate assembly by the baseboard manufacturer shall be permitted as the required outlet or outlets for the wall space utilized by such permanently installed heaters. Such receptacle outlets shall not be connected to the heater circuits. (210.52)

E3901.2 General purpose receptacle distribution. In every kitchen, family room, dining room, living room, parlor, library, den, sun room, bedroom, recreation room, or similar room or area of dwelling units, receptacle outlets shall be installed in accordance with the general provisions specified in Sections E3901.2.1 through E3901.2.3 (see Figure E3901.2).

E3901.2.1 Spacing. Receptacles shall be installed so that no point measured horizontally along the floor line of any wall space is more than 6 feet (1829 mm), from a receptacle outlet. [210.52(A)(1)]

E3901.2.2 Wall space. As used in this section, a wall space shall include the following: [210.52(A)(2)]

1. Any space that is 2 feet (610 mm) or more in width, including space measured around corners, and that is unbroken along the floor line by doorways and similar openings, fireplaces, and fixed cabinets.
2. The space occupied by fixed panels in exterior walls, excluding sliding panels.
3. The space created by fixed room dividers such as railings and freestanding bar-type counters.

E3901.2.3 Floor receptacles. Receptacle outlets in floors shall not be counted as part of the required number of receptacle outlets except where located within 18 inches (457 mm) of the wall. [210.52(A)(3)]

E3901.2.4 Countertop receptacles. Receptacles installed for countertop surfaces as specified in Section E3901.4 shall not be considered as the receptacles required by Section E3901.2. [210.52(A)(4)]

E3901.3 Small appliance receptacles. In the kitchen, pantry, breakfast room, dining room, or similar area of a dwelling unit, the two or more 20-ampere small-appliance branch circuits required by Section E3703.2, shall serve all wall and floor receptacle outlets covered by Sections E3901.2 and E3901.4 and those receptacle outlets provided for refrigeration appliances. [210.52(B)(1)]

Exceptions:

1. In addition to the required receptacles specified by Sections E3901.1 and E3901.2, switched receptacles supplied from a general-purpose branch circuit as defined in Section E3903.2, Exception 1 shall be permitted. [210.52(B)(1) Exception No. 1]
2. The receptacle outlet for refrigeration appliances shall be permitted to be supplied from an individual branch circuit rated at 15 amperes or greater. [210.52(B)(1) Exception No. 2]

E3901.3.1 Other outlets prohibited. The two or more small-appliance branch circuits specified in Section E3901.3 shall serve no other outlets. [210.52(B)(2)]

Exceptions:

1. A receptacle installed solely for the electrical supply to and support of an electric clock in any of the rooms specified in Section E3901.3. [210.52(B)(2) Exception No.1]
2. Receptacles installed to provide power for supplemental equipment and lighting on gas-fired ranges, ovens, and counter-mounted cooking units. [210.52(B)(2) Exception No.2]

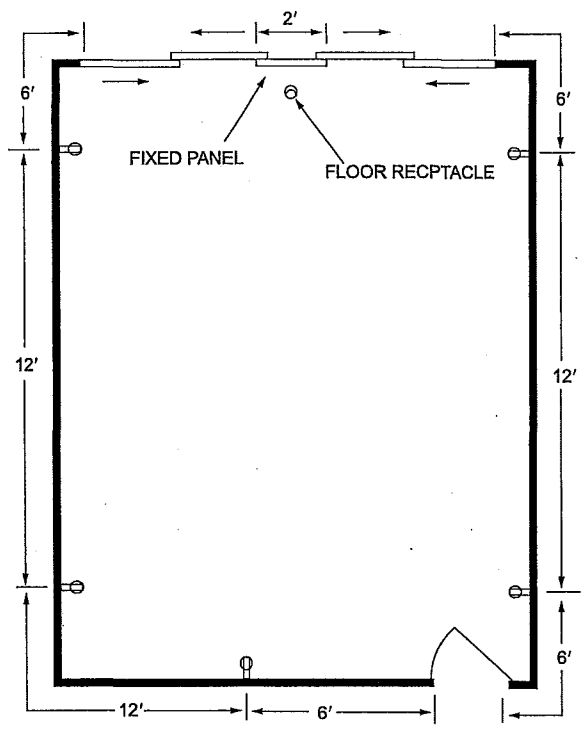

For SI: 1 foot = 304.8 mm.

FIGURE E3901.2
GENERAL USE RECEPTACLE DISTRIBUTION

E3901.3.2 Limitations. Receptacles installed in a kitchen to serve countertop surfaces shall be supplied by not less than two small-appliance branch circuits, either or both of which shall also be permitted to supply receptacle outlets in the same kitchen and in other rooms specified in Section E3901.3. Additional small-appliance branch circuits shall be permitted to supply receptacle outlets in the kitchen and other rooms specified in Section E3901.3. A small-appliance branch circuit shall not serve more than one kitchen. [210.52(B)(3)]

E3901.4 Countertop receptacles. In kitchens pantries, breakfast rooms, dining rooms and similar areas of dwelling units, receptacle outlets for countertop spaces shall be installed in accordance with Sections E3901.4.1 through E3901.4.5 (see Figure E3901.4). [210.52(C)]

E3901.4.1 Wall countertop space. A receptacle outlet shall be installed at each wall countertop space 12 inches (305 mm) or wider. Receptacle outlets shall be installed so that no point along the wall line is more than 24 inches (610 mm), measured horizontally from a receptacle outlet in that space. [210.52(C)(1)]

Exception: Receptacle outlets shall not be required on a wall directly behind a range, counter-mounted cooking unit or sink in the installation described in Figure E3901.4.1. [210.52(C)(1) Exception]

E3901.4.2 Island countertop spaces. At least one receptacle outlet shall be installed at each island countertop space with a long dimension of 24 inches (610 mm) or greater and a short dimension of 12 inches (305 mm) or greater. [210.52(C)(2)]

E3901.4.3 Peninsular countertop space. At least one receptacle outlet shall be installed at each peninsular countertop space with a long dimension of 24 inches (610 mm) or greater and a short dimension of 12 inches (305 mm) or greater. A peninsular countertop is measured from the connecting edge. [210.52(C)(3)]

E3901.4.4 Separate spaces. Countertop spaces separated by range tops, refrigerators, or sinks shall be considered as separate countertop spaces in applying the requirements of Sections E3901.4.1, E3901.4.2 and E3901.4.3. Where a range, counter-mounted cooking unit, or sink is installed in an island or peninsular countertop and the depth of the countertop behind the range, counter-mounted cooking unit, or sink is less than 12 inches (305 mm), the range, counter-mounted cooking unit, or sink has divided the countertop space into two separate countertop spaces as defined in Section E3901.4.4. Each separate countertop space shall comply with the applicable requirements of this section. [210.52(C)(4)]

E3901.4.5 Receptacle outlet location. Receptacle outlets shall be located not more than 20 inches (508 mm) above the countertop. Receptacle outlet assemblies installed in countertops shall be listed for the application. Receptacle outlets shall not be installed in a face-up position in the work surfaces or countertops. Receptacle outlets rendered not readily accessible by appliances fastened in place,

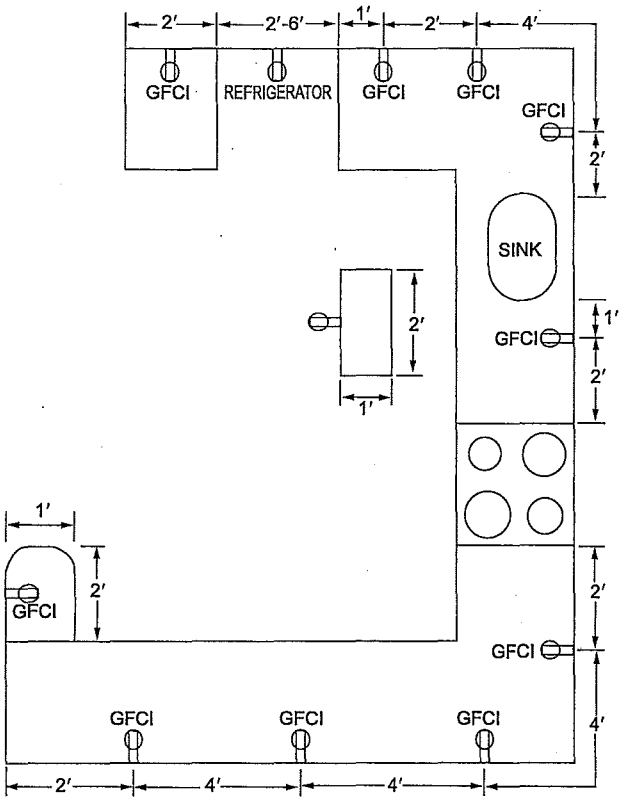

For SI: 1 foot = 304.8 mm.

FIGURE E3901.4
COUNTERTOP RECEPTACLES

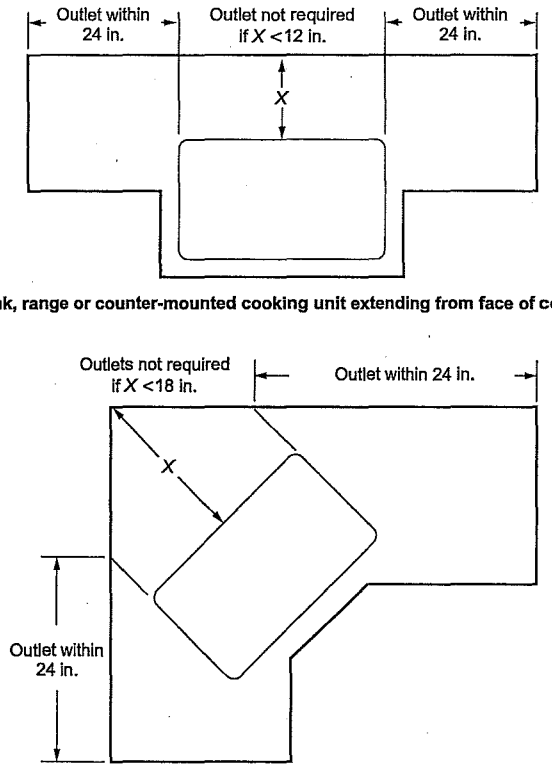

For SI: 1 inch = 25.4 mm.

FIGURE E3901.4.1
DETERMINATION OF AREA BEHIND SINK OR RANGE

3162

appliance garages, sinks or rangetops as addressed in the exception to Section E3901.4.1, or appliances occupying dedicated space shall not be considered as these required outlets. [210.52(C)(5)]

Exception: Receptacle outlets shall be permitted to be mounted not more than 12 inches (305 mm) below the countertop in construction designed for the physically impaired and for island and peninsular countertops where the countertop is flat across its entire surface and there are no means to mount a receptacle within 20 inches (508 mm) above the countertop, such as in an overhead cabinet. Receptacles mounted below the countertop in accordance with this exception shall not be located where the countertop extends more than 6 inches (152 mm) beyond its support base. [210.52(C)(5) Exception]

E3901.5 Appliance receptacle outlets. Appliance receptacle outlets installed for specific appliances, such as laundry equipment, shall be installed within 6 feet (1829 mm) of the intended location of the appliance. (210.50(C)]

E3901.6 Bathroom. At least one wall receptacle outlet shall be installed in bathrooms and such outlet shall be located within 36 inches (914 mm) of the outside edge of each lavatory basin. The receptacle outlet shall be located on a wall or partition that is adjacent to the lavatory basin location, located on the countertop, or installed on the side or face of the basin cabinet. The receptacle shall be located not more than 12 inches (305 mm) below the top of the basin.

Receptacle outlets shall not be installed in a face-up position in the work surfaces or countertops in a bathroom basin location. Receptacle outlet assemblies installed in countertops shall be listed for the application. [210.52(D)]

E3901.7 Outdoor outlets. Not less than one receptacle outlet that is readily accessible from grade level and located not more than 6 feet, 6 inches (1981 mm) above grade, shall be installed outdoors at the front and back of each dwelling unit having direct access to grade level. Balconies, decks, and porches that are accessible from inside of the dwelling unit shall have at least one receptacle outlet installed within the perimeter of the balcony, deck, or porch. The receptacle shall be located not more than 6 feet, 6 inches (1981 mm) above the balcony, deck, or porch surface. [210.52(E)]

E3901.8 Laundry areas. Not less than one receptacle outlet shall be installed in areas designated for the installation of laundry equipment.

E3901.9 Basements, garages and accessory buildings. Not less than one receptacle outlet, in addition to any provided for specific equipment, shall be installed in each separate unfinished portion of a basement, in each attached garage, and in each detached garage or accessory building that is provided with electrical power. The branch circuit supplying the receptacle(s) in a garage shall not supply outlets outside of the garage and not less than one receptacle outlet shall be installed for each motor vehicle space. [210.52(G)(1), (2), and (3)]

E3901.10 Hallways. Hallways of 10 feet (3048 mm) or more in length shall have at least one receptacle outlet. The hall length shall be considered the length measured along the centerline of the hall without passing through a doorway. [210.52(H)]

E3901.11 Foyers. Foyers that are not part of a hallway in accordance with Section E3901.10 and that have an area that is greater than 60 ft^2 (5.57 m^2) shall have a receptacle(s) located in each wall space that is 3 feet (914 mm) or more in width. Doorways, door-side windows that extend to the floor, and similar openings shall not be considered as wall space. [210.52(H)]

E3901.12 HVAC outlet. A 125-volt, single-phase, 15- or 20-ampere-rated receptacle outlet shall be installed at an accessible location for the servicing of heating, air-conditioning and refrigeration equipment. The receptacle shall be located on the same level and within 25 feet (7620 mm) of the heating, air-conditioning and refrigeration equipment. The receptacle outlet shall not be connected to the load side of the HVAC equipment disconnecting means. (210.63)

Exception: A receptacle outlet shall not be required for the servicing of evaporative coolers. (210.63 Exception)

SECTION E3902
GROUND-FAULT AND ARC-FAULT CIRCUIT-INTERRUPTER PROTECTION

E3902.1 Bathroom receptacles. 125-volt, single-phase, 15- and 20-ampere receptacles installed in bathrooms shall have ground-fault circuit-interrupter protection for personnel. [210.8(A)(1)]

E3902.2 Garage and accessory building receptacles. 125-volt, single-phase, 15- or 20-ampere receptacles installed in garages and grade-level portions of unfinished accessory buildings used for storage or work areas shall have ground-fault circuit-interrupter protection for personnel. [210.8(A)(2)]

E3902.3 Outdoor receptacles. 125-volt, single-phase, 15- and 20-ampere receptacles installed outdoors shall have ground-fault circuit-interrupter protection for personnel. [210.8(A)(3)]

Exception: Receptacles as covered in Section E4101.7. [210.8(A)(3) Exception]

E3902.4 Crawl space receptacles. Where a crawl space is at or below grade level, 125-volt, single-phase, 15- and 20-ampere receptacles installed in such spaces shall have ground-fault circuit-interrupter protection for personnel. [210.8(A)(4)]

E3902.5 Unfinished basement receptacles. 125-volt, single-phase, 15- and 20-ampere receptacles installed in unfinished basements shall have ground-fault circuit-interrupter protection for personnel. For purposes of this section, unfinished basements are defined as portions or areas of the basement not intended as habitable rooms and limited to storage areas, work areas, and similar areas. [210.8(A)(5)]

Exception: A receptacle supplying only a permanently installed fire alarm or burglar alarm system. Receptacles installed in accordance with this exception shall not be considered as meeting the requirement of Section E3901.9. [210.8(A)(5) Exception]

E3902.6 Kitchen receptacles. 125-volt, single-phase, 15- and 20-ampere receptacles that serve countertop surfaces shall have ground-fault circuit-interrupter protection for personnel. [210.8(A)(6)]

E3902.7 Sink receptacles. 125-volt, single-phase, 15- and 20-ampere receptacles that are located within 6 feet (1829 mm) of the outside edge of a sink shall have ground-fault circuit-interrupter protection for personnel. Receptacle outlets shall not be installed in a face-up position in the work surfaces or countertops. [210.8(A)(7)]

E3902.8 Bathtub or shower stall receptacles. 125-volt, single phase, 15- and 20-ampere receptacles that are located within 6 feet (1829 mm) of the outside edge of a bathtub or shower stall shall have ground-fault circuit interrupter protection for personnel. [210.8(A)(8)]

E3902.9 Laundry areas. 125-volt, single-phase, 15- and 20-ampere receptacles installed in laundry areas shall have ground-fault circuit interrupter protection for personnel. [210.8(A)(9)]

E3902.10 Kitchen dishwasher branch circuit. Ground-fault circuit-interrupter protection shall be provided for outlets that supply dishwashers in dwelling unit locations. [210.8(D)]

E3902.11 Boathouse receptacles. 125-volt, single-phase, 15- or 20-ampere receptacles installed in boathouses shall have ground-fault circuit-interrupter protection for personnel. [210.8(A)(8)]

E3902.12 Boat hoists. Ground-fault circuit-interrupter protection for personnel shall be provided for 240-volt and less outlets that supply boat hoists. [210.8(C)]

E3902.13 Electrically heated floors. Ground-fault circuit-interrupter protection for personnel shall be provided for electrically heated floors in bathrooms, kitchens and in hydromassage bathtub, spa and hot tub locations. [424.44(G)]

E3902.14 Location of ground-fault circuit interrupters. Ground-fault circuit interrupters shall be installed in a readily accessible location. [210.8(A)]

E3902.15 Location of arc-fault circuit interrupters. Arc-fault circuit interrupters shall be installed in readily accessible locations.

E3902.16 Arc-fault circuit-interrupter protection. Branch circuits that supply 120-volt, single-phase, 15- and 20-ampere outlets installed in kitchens, family rooms, dining rooms, living rooms, parlors, libraries, dens, bedrooms, sunrooms, recreations rooms, closets, hallways, laundry areas and similar rooms or areas shall be protected by any of the following: [210.12(A)]

1. A listed combination-type arc-fault circuit interrupter, installed to provide protection of the entire branch circuit. [210.12(A)(1)]
2. A listed branch/feeder-type AFCI installed at the origin of the branch-circuit in combination with a listed outlet branch-circuit type arc-fault circuit interrupter installed at the first outlet box on the branch circuit. The first outlet box in the branch circuit shall be marked to indicate that it is the first outlet of the circuit. [210.12(A)(2)]
3. A listed supplemental arc protection circuit breaker installed at the origin of the branch circuit in combination with a listed outlet branch-circuit type arc-fault circuit interrupter installed at the first outlet box on the branch circuit where all of the following conditions are met:
   - 3.1. The branch-circuit wiring shall be continuous from the branch-circuit overcurrent device to the outlet branch-circuit arc-fault circuit interrupter.
   - 3.2. The maximum length of the branch-circuit wiring from the branch-circuit overcurrent device to the first outlet shall not exceed 50 feet (15.2 m) for 14 AWG conductors and 70 feet (21.3 m) for 12 AWG conductors.
   - 3.3. The first outlet box on the branch circuit shall be marked to indicate that it is the first outlet on the circuit. [210.12(A)(3)]
4. A listed outlet branch-circuit type arc-fault circuit interrupter installed at the first outlet on the branch circuit in combination with a listed branch-circuit overcurrent protective device where all of the following conditions are met:
   - 4.1. The branch-circuit wiring shall be continuous from the branch-circuit overcurrent device to the outlet branch-circuit arc-fault circuit interrupter.
   - 4.2. The maximum length of the branch-circuit wiring from the branch-circuit overcurrent device to the first outlet shall not exceed 50 feet (15.2 m) for 14 AWG conductors and 70 feet (21.3 m) for 12 AWG conductors.
   - 4.3. The first outlet box on the branch circuit shall be marked to indicate that it is the first outlet on the circuit.
   - 4.4. The combination of the branch-circuit overcurrent device and outlet branch-circuit AFCI shall be identified as meeting the requirements for a system combination-type AFCI and shall be listed as such. [210.12(A)(4)]
5. Where metal outlet boxes and junction boxes and RMC, IMC, EMT, Type MC or steel-armored Type AC cables meeting the requirements of Section E3908.8, metal wireways or metal auxiliary gutters are installed for the portion of the branch circuit between the branch-circuit overcurrent device and the first outlet, a listed outlet branch-circuit type AFCI installed at the first outlet shall be considered as providing protection for the remaining portion of the branch circuit. [210.12(A)(5)]
6. Where a listed metal or nonmetallic conduit or tubing or Type MC cable is encased in not less than 2 inches (50.8 mm) of concrete for the portion of the branch circuit between the branch-circuit overcurrent device and the first outlet, a listed outlet branch-circuit type AFCI installed at the first outlet shall be considered as providing protection for the remaining portion of the branch circuit. [210.12(A)(6)]

   Exception: AFCI protection is not required for an individual branch circuit supplying only a fire alarm system where the branch circuit is wired with metal outlet and junction boxes and RMC, IMC, EMT or steel-sheathed armored cable Type AC or Type MC meeting the requirements of Section E3908.8.

E3902.17 Arc-fault circuit interrupter protection for branch circuit extensions or modifications. Where branch-circuit wiring is modified, replaced, or extended in any of the areas specified in Section E3902.16, the branch circuit shall be protected by one of the following:

1. A combination-type AFCI located at the origin of the branch circuit
2. An outlet branch-circuit type AFCI located at the first receptacle outlet of the existing branch circuit. [210.12(B)]

Exception: AFCI protection shall not be required where the extension of the existing conductors is not more than 6 feet (1.8 m) in length and does not include any additional outlets or devices. [210.12(B) Exception]

SECTION E3903
LIGHTING OUTLETS

E3903.1 General. Lighting outlets shall be provided in accordance with Sections E3903.2 through E3903.4. [210.70(A)]

E3903.2 Habitable rooms. At least one wall switch-controlled lighting outlet shall be installed in every habitable room and bathroom. [210.70(A)(1)]

Exceptions:

1. In other than kitchens and bathrooms, one or more receptacles controlled by a wall switch shall be considered equivalent to the required lighting outlet. [210.70(A)(1) Exception No. 1]
2. Lighting outlets shall be permitted to be controlled by occupancy sensors that are in addition to wall switches, or that are located at a customary wall switch location and equipped with a manual override that will allow the sensor to function as a wall switch. [210.70(A)(1) Exception No. 2]

E3903.3 Additional locations. At least one wall-switch-controlled lighting outlet shall be installed in hallways, stairways, attached garages, and detached garages with electric power. At least one wall-switch-controlled lighting outlet shall be installed to provide illumination on the exterior side of each outdoor egress door having grade level access, including outdoor egress doors for attached garages and detached garages with electric power. A vehicle door in a garage shall not be considered as an outdoor egress door. Where one or more lighting outlets are installed for interior stairways, there shall be a wall switch at each floor level and landing level that includes an entryway to control the lighting outlets where the stairway between floor levels has six or more risers. [210.70(A)(2)]

Exception: In hallways, stairways, and at outdoor egress doors, remote, central, or automatic control of lighting shall be permitted. [210.70(A)(2) Exception]

E3903.4 Storage or equipment spaces. In attics, under-floor spaces, utility rooms and basements, at least one lighting outlet shall be installed where these spaces are used for storage or contain equipment requiring servicing. Such lighting outlet shall be controlled by a wall switch or shall have an integral switch. At least one point of control shall be at the usual point of entry to these spaces. The lighting outlet shall be provided at or near the equipment requiring servicing. [210.70(A)(3)]

SECTION E3904
GENERAL INSTALLATION REQUIREMENTS

E3904.1 Electrical continuity of metal raceways and enclosures. Metal raceways, cable armor and other metal enclosures for conductors shall be mechanically joined together into a continuous electric conductor and shall be connected to all boxes, fittings and cabinets so as to provide effective electrical continuity. Raceways and cable assemblies shall be mechanically secured to boxes, fittings cabinets and other enclosures. (300.10)

Exception: Short sections of raceway used to provide cable assemblies with support or protection against physical damage. (300.10 Exception No. 1)

E3904.2 Mechanical continuity—raceways and cables. Metal or nonmetallic raceways, cable armors and cable sheaths shall be continuous between cabinets, boxes, fittings or other enclosures or outlets.

Exception: Short sections of raceway used to provide cable assemblies with support or protection against physical damage. (300.12 Exception No. 1)

E3904.3 Securing and supporting. Raceways, cable assemblies, boxes, cabinets and fittings shall be securely fastened in place. (300.11)

E3904.3.1 Prohibited means of support. Cable wiring methods shall not be used as a means of support for other cables, raceways and nonelectrical equipment. [300.11(C)]

E3904.4 Raceways as means of support. Raceways shall be used as a means of support for other raceways, cables or nonelectric equipment only under the following conditions:

1. Where the raceway or means of support is identified as a means of support; or
2. Where the raceway contains power supply conductors for electrically controlled equipment and is used to support Class 2 circuit conductors or cables that are solely for the purpose of connection to the control circuits of the equipment served by such raceway; or
3. Where the raceway is used to support boxes or conduit bodies in accordance with Sections E3906.8.4 and E3906.8.5. [300.11(B)]

E3904.5 Raceway installations. Raceways shall be installed complete between outlet, junction or splicing points prior to the installation of conductors. (300.18)

Exception: Short sections of raceways used to contain conductors or cable assemblies for protection from physical damage shall not be required to be installed complete between outlet, junction, or splicing points. (300.18 Exception)

E3904.6 Conduit and tubing fill. The maximum number of conductors installed in conduit or tubing shall be in accordance with Tables E3904.6(1) through E3904.6(10). (300.17, Chapter 9, Table 1 and Annex C)

E3904.7 Air handling-stud cavity and joist spaces. Where wiring methods having a nonmetallic covering pass through stud cavities and joist spaces used for air handling, such wiring shall pass through such spaces perpendicular to the long dimension of the spaces. [300.22(C) Exception]

TABLE E3904.6(1) (Annex C, Table C.1)
MAXIMUM NUMBER OF CONDUCTORS IN ELECTRICAL METALLIC TUBING (EMT)[a]

TYPE LETTERS	CONDUCTOR SIZE AWG/kcmil	TRADE SIZES (inches)					
		1/2	3/4	1	1 1/4	1 1/2	2
RHH, RHW, RHW-2	14	4	7	11	20	27	46
	12	3	6	9	17	23	38
	10	2	5	8	13	18	30
	8	1	2	4	7	9	16
	6	1	1	3	5	8	13
	4	1	1	2	4	6	10
	3	1	1	1	4	5	9
	2	1	1	1	3	4	7
	1	0	1	1	1	3	5
	1/0	0	1	1	1	2	4
	2/0	0	1	1	1	2	4
	3/0	0	0	1	1	1	3
	4/0	0	0	1	1	1	3
TW, THHW, THW, THW-2	14	8	15	25	43	58	96
	12	6	11	19	33	45	74
	10	5	8	14	24	33	55
	8	2	5	8	13	18	30
RHH[a], RHW[a], RHW-2[a]	14	6	10	16	28	39	64
	12	4	8	13	23	31	51
	10	3	6	10	18	24	40
	8	1	4	6	10	14	24
RHH[a], RHW[a], RHW-2[a], TW, THW, THHW, THW-2	6	1	3	4	8	11	18
	4	1	1	3	6	8	13
	3	1	1	3	5	7	12
	2	1	1	2	4	6	10
	1	1	1	1	3	4	7
	1/0	0	1	1	2	3	6
	2/0	0	1	1	1	3	5
	3/0	0	1	1	1	2	4
	4/0	0	0	1	1	1	3
THHN, THWN, THWN-2	14	12	22	35	61	84	138
	12	9	16	26	45	61	101
	10	5	10	16	28	38	63
	8	3	6	9	16	22	36
	6	2	4	7	12	16	26
	4	1	2	4	7	10	16
	3	1	1	3	6	8	13
	2	1	1	3	5	7	11
	1	1	1	1	4	5	8
	1/0	1	1	1	3	4	7
	2/0	0	1	1	2	3	6
	3/0	0	1	1	1	3	5
	4/0	0	1	1	1	2	4
XHH, XHHW, XHHW-2	14	8	15	25	43	58	96
	12	6	11	19	33	45	74
	10	5	8	14	24	33	55
	8	2	5	8	13	18	30
	6	1	3	6	10	14	22
	4	1	2	4	7	10	16
	3	1	1	3	6	8	14
	2	1	1	3	5	7	11
	1	1	1	1	4	5	8
	1/0	1	1	1	3	4	7
	2/0	0	1	1	2	3	6
	3/0	0	1	1	1	3	5
	4/0	0	1	1	1	2	4

For SI: 1 inch = 25.4 mm.

a. Types RHW, and RHW-2 without outer covering.

TABLE E3904.6(2) (Annex C, Table C.2)
MAXIMUM NUMBER OF CONDUCTORS IN ELECTRICAL NONMETALLIC TUBING (ENT)[a]

TYPE LETTERS	CONDUCTOR SIZE AWG/kcmil	TRADE SIZES (Inches)					
		1/2	3/4	1	1 1/4	1 1/2	2
RHH, RHW, RHW-2	14	3	6	10	19	26	43
	12	2	5	9	16	22	36
	10	1	4	7	13	17	29
	8	1	1	3	6	9	15
	6	1	1	3	5	7	12
	4	1	1	2	4	6	9
	3	1	1	1	3	5	8
	2	0	1	1	3	4	7
	1	0	1	1	1	3	5
	1/0	0	0	1	1	2	4
	2/0	0	0	1	1	1	3
RHH, RHW, RHW-2	3/0	0	0	1	1	1	3
	4/0	0	0	1	1	1	2
TW, THHW, THW, THW-2	14	7	13	22	40	55	92
	12	5	10	17	31	42	71
	10	4	7	13	23	32	52
	8	1	4	7	13	17	29
RHH[a], RHW[a], RHW-2[a]	14	4	8	15	27	37	61
	12	3	7	12	21	29	49
	10	3	5	9	17	23	38
	8	1	3	5	10	14	23
RHH[a], RHW[a], RHW-2[a], TW, THW, THHW, THW-2	6	1	2	4	7	10	17
	4	1	1	3	5	8	13
	3	1	1	2	5	7	11
	2	1	1	2	4	6	9
	1	0	1	1	3	4	6
	1/0	0	1	1	2	3	5
	2/0	0	1	1	1	3	5
	3/0	0	0	1	1	2	4
	4/0	0	0	1	1	1	3
THHN, THWN, THWN-2	14	10	18	32	58	80	132
	12	7	13	23	42	58	96
	10	4	8	15	26	36	60
	8	2	5	8	15	21	35
	6	1	3	6	11	15	25
	4	1	1	4	7	9	15
	3	1	1	3	5	8	13
	2	1	1	2	5	6	11
THHN, THWN, THWN-2	1	1	1	1	3	5	8
	1/0	0	1	1	3	4	7
	2/0	0	1	1	2	3	5
	3/0	0	1	1	1	3	4
	4/0	0	0	1	1	2	4
XHH, XHHW, XHHW-2	14	7	13	22	40	55	92
	12	5	10	17	31	42	71
	10	4	7	13	23	32	52
	8	1	4	7	13	17	29
	6	1	3	5	9	13	21
	4	1	1	4	7	9	15
	3	1	1	3	6	8	13
	2	1	1	2	5	6	11
	1	1	1	1	3	5	8
	1/0	0	1	1	3	4	7
	2/0	0	1	1	2	3	6
	3/0	0	1	1	1	3	5
	4/0	0	0	1	1	2	4

For SI: 1 inch = 25.4 mm.
a. Types RHW, and RHW-2 without outer covering.

TABLE E3904.6(3) (Annex C, Table C.3)
MAXIMUM NUMBER OF CONDUCTORS IN FLEXIBLE METALLIC CONDUIT (FMC)[a]

TYPE LETTERS	CONDUCTOR SIZE AWG/kcmil	TRADE SIZES (inches)					
		1/2	3/4	1	1 1/4	1 1/2	2
RHH, RHW, RHW-2	14	4	7	11	17	25	44
	12	3	6	9	14	21	37
	10	3	5	7	11	17	30
	8	1	2	4	6	9	15
	6	1	1	3	5	7	12
	4	1	1	2	4	5	10
	3	1	1	1	3	5	7
RHH, RHW, RHW-2	2	1	1	1	3	4	7
	1	0	1	1	1	2	5
	1/0	0	1	1	1	2	4
	2/0	0	1	1	1	1	3
	3/0	0	0	1	1	1	3
TW, THHW, THW, THW-2	14	9	15	23	36	53	94
	12	7	11	18	28	41	72
	10	5	8	13	21	30	54
	8	3	5	7	11	17	30
RHH[a], RHW[a], RHW-2[a]	14	6	10	15	24	35	62
	12	5	8	12	19	28	50
	10	4	6	10	15	22	39
	8	1	4	6	9	13	23
RHH[a], RHW[a], RHW-2[a], TW, THW, THHW, THW-2	6	1	3	4	7	10	18
	4	1	1	3	5	7	13
	3	1	1	3	4	6	11
	2	1	1	2	4	5	10
	1	1	1	1	2	4	7
	1/0	0	1	1	1	3	6
	2/0	0	1	1	1	3	5
	3/0	0	1	1	1	2	4
	4/0	0	0	1	1	1	3
	4/0	0	0	1	1	1	2
THHN, THWN, THWN-2	14	13	22	33	52	76	134
	12	9	16	24	38	56	98
	10	6	10	15	24	35	62
	8	3	6	9	14	20	35
THHN, THWN, THWN-2	6	2	4	6	10	14	25
	4	1	2	4	6	9	16
	3	1	1	3	5	7	13
	2	1	1	3	4	6	11
	1	1	1	1	3	4	8
	1/0	1	1	1	2	4	7
	2/0	0	1	1	1	3	6
	3/0	0	1	1	1	2	5
	4/0	0	1	1	1	1	4
XHH, XHHW, XHHW-2	14	9	15	23	36	53	94
	12	7	11	18	28	41	72
	10	5	8	13	21	30	54
	8	3	5	7	11	17	30
	6	1	3	5	8	12	22
	4	1	2	4	6	9	16
	3	1	1	3	5	7	13
	2	1	1	3	4	6	11
	1	1	1	1	3	5	8
	1/0	1	1	1	2	4	7
	2/0	0	1	1	2	3	6
	3/0	0	1	1	1	3	5
	4/0	0	1	1	1	2	4

For SI: 1 inch = 25.4 mm.

a. Types RHW, and RHW-2 without outer covering.

TABLE E3904.6(4) (Annex C, Table C.4)
MAXIMUM NUMBER OF CONDUCTORS IN INTERMEDIATE METALLIC CONDUIT (IMC)[a]

TYPE LETTERS	CONDUCTOR SIZE AWG/kcmil	TRADE SIZES (inches)					
		1/2	3/4	1	1 1/4	1 1/2	2
RHH, RHW, RHW-2	14	4	8	13	22	30	49
	12	4	6	11	18	25	41
	10	3	5	8	15	20	33
	8	1	3	4	8	10	17
	6	1	1	3	6	8	14
	4	1	1	3	5	6	11
	3	1	1	2	4	6	9
	2	1	1	1	3	5	8
	1	0	1	1	2	3	5
	1/0	0	1	1	1	3	4
	2/0	0	1	1	1	2	4
	3/0	0	0	1	1	1	3
	4/0	0	0	1	1	1	3
TW, THHW, THW, THW-2	14	10	17	27	47	64	104
	12	7	13	21	36	49	80
	10	5	9	15	27	36	59
	8	3	5	8	15	20	33
RHH[a], RHW[a], RHW-2[a]	14	6	11	18	31	42	69
	12	5	9	14	25	34	56
	10	4	7	11	19	26	43
	8	2	4	7	12	16	26
RHH[a], RHW[a], RHW-2[a], TW, THW, THHW, THW-2	6	1	3	5	9	12	20
	4	1	2	4	6	9	15
	3	1	1	3	6	8	13
	2	1	1	3	5	6	11
	1	1	1	1	3	4	7
	1/0	1	1	1	3	4	6
	2/0	0	1	1	2	3	5
	3/0	0	1	1	1	3	4
	4/0	0	1	1	1	2	4
THHN, THWN, THWN-2	14	14	24	39	68	91	149
	12	10	17	29	49	67	109
	10	6	11	18	31	42	68
	8	3	6	10	18	24	39
	6	2	4	7	13	17	28
	4	1	3	4	8	10	17
	3	1	2	4	6	9	15
	2	1	1	3	5	7	12
	1	1	1	2	4	5	9
	1/0	1	1	1	3	4	8
	2/0	1	1	1	3	4	6
THHN, THWN, THWN-2	3/0	0	1	1	2	3	5
	2/0	0	1	1	1	2	4
XHH, XHHW, XHHW-2	14	10	17	27	47	64	104
	12	7	13	21	36	49	80
	10	5	9	15	27	36	59
	8	3	5	8	15	20	33
	6	1	4	6	11	15	24
	4	1	3	4	8	11	18
	3	1	2	4	7	9	15
	2	1	1	3	5	7	12
	1	1	1	2	4	5	9
	1/0	1	1	1	3	5	8
	2/0	1	1	1	3	4	6
	3/0	0	1	1	2	3	5
	4/0	0	1	1	1	2	4

For SI: 1 inch = 25.4 mm.

a. Types RHW, and RHW-2 without outer covering.

TABLE E3904.6(5) (Annex C, Table C.5)
MAXIMUM NUMBER OF CONDUCTORS IN LIQUID-TIGHT FLEXIBLE NONMETALLIC CONDUIT (FNMC-B)[a]

TYPE LETTERS	CONDUCTOR SIZE AWG/kcmil	TRADE SIZES (inches)						
		3/8	1/2	3/4	1	1 1/4	1 1/2	2
RHH, RHW, RHW-2	14	2	4	7	12	21	27	44
	12	1	3	6	10	17	22	36
	10	1	3	5	8	14	18	29
	8	1	1	2	4	7	9	1
	6	1	1	1	3	6	7	12
	4	0	1	1	2	4	6	9
RHH, RHW, RHW-2	3	0	1	1	1	4	5	8
	2	0	1	1	1	3	4	7
	1	0	0	1	1	1	3	5
	1/0	0	0	1	1	1	2	4
	2/0	0	0	1	1	1	1	3
	3/0	0	0	0	1	1	1	3
	4/0	0	0	0	1	1	1	2
TW, THHW, THW, THW-2	14	5	9	15	25	44	57	93
	12	4	7	12	19	33	43	71
	10	3	5	9	14	25	32	53
	8	1	3	5	8	14	18	29
RHH[a], RHW[a], RGW-2[a]	14	3	6	10	16	29	38	62
	12	3	5	8	13	23	30	50
	10	1	3	6	10	18	23	39
	8	1	1	4	6	11	14	23
RHH[a], RHW[a], RHW-2[a], TW, THW, THHW, THW-2	6	1	1	3	5	8	11	18
	4	1	1	1	3	6	8	13
	3	1	1	1	3	5	7	11
	2	0	1	1	2	4	6	9
	1	0	1	1	1	3	4	7
	1/0	0	0	1	1	2	3	6
	2/0	0	0	1	1	2	3	5
	3/0	0	0	1	1	1	2	4
	4/0	0	0	0	1	1	1	3
THHN, THWN, THWN-2	14	8	13	22	36	63	81	133
	12	5	9	16	26	46	59	97
	10	3	6	10	16	29	37	61
	8	1	3	6	9	16	21	35
THHN, THWN, THWN-2	6	1	2	4	7	12	15	25
	4	1	1	2	4	7	9	15
	3	1	1	1	3	6	8	13
	2	1	1	1	3	5	7	11
	1	0	1	1	1	4	5	8
	1/0	0	1	1	1	3	4	7
	2/0	0	0	1	1	2	3	6
	3/0	0	0	1	1	1	3	5
	4/0	0	0	1	1	1	2	4
XHH, XHHW, XHHW-2	14	5	9	15	25	44	57	93
	12	4	7	12	19	33	43	71
	10	3	5	9	14	25	32	53
	8	1	3	5	8	14	18	29
	6	1	1	3	6	10	13	22
	4	1	1	2	4	7	9	16
	3	1	1	1	3	6	8	13
	2	1	1	1	3	5	7	11
	1	0	1	1	1	4	5	8
	1/0	0	1	1	1	3	4	7
	2/0	0	0	1	1	2	3	6
	3/0	0	0	1	1	1	3	5
	4/0	0	0	1	1	1	2	4

For SI: 1 inch = 25.4 mm.

a. Types RHW, and RHW-2 without outer covering.

TABLE E3904.6(6) (Annex C, Table C.6)
MAXIMUM NUMBER OF CONDUCTORS IN LIQUID-TIGHT FLEXIBLE NONMETALLIC CONDUIT (FNMC-A)[a]

TYPE LETTERS	CONDUCTOR SIZE AWG/kcmil	TRADE SIZES (inches)						
		3/8	1/2	3/4	1	1 1/4	1 1/2	2
RHH, RHW, RHW-2	14	2	4	7	11	20	27	45
	12	1	3	6	9	17	23	38
	10	1	3	5	8	13	18	30
	8	1	1	2	4	7	9	16
	6	1	1	1	3	5	7	13
	4	0	1	1	2	4	6	10
	3	0	1	1	1	4	5	8
	2	0	1	1	1	3	4	7
	1	0	0	1	1	1	3	5
	1/0	0	0	1	1	1	2	4
	2/0	0	0	1	1	1	1	4
	3/0	0	0	0	1	1	1	3
	4/0	0	0	0	1	1	1	3
TW, THHW, THW, THW-2	14	5	9	15	24	43	58	96
	12	4	7	12	19	33	44	74
	10	3	5	9	14	24	33	55
	8	1	3	5	8	13	18	30
RHH[a], RHW[a], RHW-2[a]	14	3	6	10	16	28	38	64
	12	3	4	8	13	23	31	51
	10	1	3	6	10	18	24	40
	8	1	1	4	6	10	14	24
RHH[a], RHW[a], RHW-2[a], TW, THW, THHW, THW-2	6	1	1	3	4	8	11	18
	4	1	1	1	3	6	8	13
	3	1	1	1	3	5	7	11
	2	0	1	1	2	4	6	10
	1	0	1	1	1	3	4	7
RHH[a], RHW[a], RHW-2[a], TW, THW, THHW, THW-2	1/0	0	0	1	1	2	3	6
	2/0	0	0	1	1	1	3	5
	3/0	0	0	1	1	1	2	4
	4/0	0	0	0	1	1	1	3
THHN, THWN, THWN-2	14	8	13	22	35	62	83	137
	12	5	9	16	25	45	60	100
	10	3	6	10	16	28	38	63
	8	1	3	6	9	16	22	36
	6	1	2	4	6	12	16	26
	4	1	1	2	4	7	9	16
	3	1	1	1	3	6	8	13
	2	1	1	1	3	5	7	11
	1	0	1	1	1	4	5	8
	1/0	0	1	1	1	3	4	7
	2/0	0	0	1	1	2	3	6
	3/0	0	0	1	1	1	3	5
	4/0	0	0	1	1	1	2	4
XHH, XHHW, XHHW-2	14	5	9	15	24	43	58	96
	12	4	7	12	19	33	44	74
	10	3	5	9	14	24	33	55
	8	1	3	5	8	13	18	30
	6	1	1	3	5	10	13	22
	4	1	1	2	4	7	10	16
	3	1	1	1	3	6	8	14
	2	1	1	1	3	5	7	11
	1	0	1	1	1	4	5	8
XHH, XHHW, XHHW-2	1/0	0	1	1	1	3	4	7
	2/0	0	0	1	1	2	3	6
	3/0	0	0	1	1	1	3	5
	4/0	0	0	1	1	1	2	4

For SI: 1 inch = 25.4 mm.

a. Types RHW, and RHW-2 without outer covering.

TABLE E3904.6(7) (Annex C, Table C.7)
MAXIMUM NUMBER OF CONDUCTORS IN LIQUID-TIGHT FLEXIBLE METAL CONDUIT (LFMC)[a]

TYPE LETTERS	CONDUCTOR SIZE AWG/kcmil	TRADE SIZES (inches)					
		1/2	3/4	1	1 1/4	1 1/2	2
RHH, RHW, RHW-2	14	4	7	12	21	27	44
	12	3	6	10	17	22	36
	10	3	5	8	14	18	29
	8	1	2	4	7	9	15
	6	1	1	3	6	7	12
	4	1	1	2	4	6	9
	3	1	1	1	4	5	8
	2	1	1	1	3	4	7
	1	0	1	1	1	3	5
	1/0	0	1	1	1	2	4
	2/0	0	1	1	1	1	3
	3/0	0	0	1	1	1	3
	4/0	0	0	1	1	1	2
TW, THHW, THW, THW-2	14	9	15	25	44	57	93
	12	7	12	19	33	43	71
	10	5	9	14	25	32	53
	8	3	5	8	14	18	29
RHH[a], RHW[a], RHW-2[a], THHW, THW, THW-2	14	6	10	16	29	38	62
	12	5	8	13	23	30	50
	10	3	6	10	18	23	39
	8	1	4	6	11	14	23
RHH[a], RHW[a], RHW-2[a], TW, THW, THHW, THW-2	6	1	3	5	8	11	18
	4	1	1	3	6	8	13
	3	1	1	3	5	7	11
	2	1	1	2	4	6	9
	1	1	1	1	3	4	7
	1/0	0	1	1	2	3	6
	2/0	0	1	1	2	3	5
	3/0	0	1	1	1	2	4
	4/0	0	0	1	1	1	3
THHN, THWN, THWN-2	14	13	22	36	63	81	133
	12	9	16	26	46	59	97
	10	6	10	16	29	37	61
	8	3	6	9	16	21	35
	6	2	4	7	12	15	25
	4	1	2	4	7	9	15
	3	1	1	3	6	8	13
	2	1	1	3	5	7	11
	1	1	1	1	4	5	8
	1/0	1	1	1	3	4	7
	2/0	0	1	1	2	3	6
	3/0	0	1	1	1	3	5
	4/0	0	1	1	1	2	4
XHH, XHHW, XHHW-2	14	9	15	25	44	57	93
	12	7	12	19	33	43	71
	10	5	9	14	25	32	53
	8	3	5	8	14	18	29
XHH, XHHW, XHHW-2	6	1	3	6	10	13	22
	4	1	2	4	7	9	16
	3	1	1	3	6	8	13
	2	1	1	3	5	7	11
	1	1	1	1	4	5	8
	1/0	1	1	1	3	4	7
	2/0	0	1	1	2	3	6
	3/0	0	1	1	1	3	5
	4/0	0	1	1	1	2	4

For SI: 1 inch = 25.4 mm.

a. Types RHW, and RHW-2 without outer covering.

TABLE E3904.6(8) (Annex C, Table C.8)
MAXIMUM NUMBER OF CONDUCTORS IN RIGID METAL CONDUIT (RMC)[a]

TYPE LETTERS	CONDUCTOR SIZE AWG/kcmil	TRADE SIZES (inches)					
		1/2	3/4	1	1 1/4	1 1/2	2
RHH, RHW, RHW-2	14	4	7	12	21	28	46
	12	3	6	10	17	23	38
	10	3	5	8	14	19	31
	8	1	2	4	7	10	16
	6	1	1	3	6	8	13
	4	1	1	2	4	6	10
	3	1	1	2	4	5	9
	2	1	1	1	3	4	7
	1	0	1	1	1	3	5
	1/0	0	1	1	1	2	4
	2/0	0	1	1	1	2	4
	3/0	0	0	1	1	1	3
	4/0	0	0	1	1	1	3
TW, THHW, THW, THW-2	14	9	15	25	44	59	98
	12	7	12	19	33	45	75
	10	5	9	14	25	34	56
	8	3	5	8	14	19	31
RHH[a], RHW[a], RHW-2[a]	14	6	10	17	29	39	65
	12	5	8	13	23	32	52
	10	3	6	10	18	25	41
	8	1	4	6	11	15	24
RHH[a], RHW[a], RHW-2[a], TW, THW, THHW, THW-2	6	1	3	5	8	11	18
	4	1	1	3	6	8	14
	3	1	1	3	5	7	12
	2	1	1	2	4	6	10
	1	1	1	1	3	4	7
	1/0	0	1	1	2	3	6
	2/0	0	1	1	2	3	5
	3/0	0	1	1	1	2	4
	4/0	0	0	1	1	1	3
THHN, THWN, THWN-2	14	13	22	36	63	85	140
	12	9	16	26	46	62	102
	10	6	10	17	29	39	64
	8	3	6	9	16	22	37
	6	2	4	7	12	16	27
	4	1	2	4	7	10	16
	3	1	1	3	6	8	14
	2	1	1	3	5	7	11
	1	1	1	1	4	5	8
THHN, THWN, THWN-2	1/0	1	1	1	3	4	7
	2/0	0	1	1	2	3	6
	3/0	0	1	1	1	3	5
	4/0	0	1	1	1	2	4
XHH, XHHW, XHHW-2	14	9	15	25	44	59	98
	12	7	12	19	33	45	75
	10	5	9	14	25	34	56
	8	3	5	8	14	19	31
	6	1	3	6	10	14	23
	4	1	2	4	7	10	16
	3	1	1	3	6	8	14
	2	1	1	3	5	7	12
	1	1	1	1	4	5	9
	1/0	1	1	1	3	4	7
	2/0	0	1	1	2	3	6
	3/0	0	1	1	1	3	5
	4/0	0	1	1	1	2	4

For SI: 1 inch = 25.4 mm.

a. Types RHW, and RHW-2 without outer covering.

TABLE E3904.6(9) (Annex C, Table C.9)
MAXIMUM NUMBER OF CONDUCTORS IN RIGID PVC CONDUIT, SCHEDULE 80 (PVC-80)[a]

TYPE LETTERS	CONDUCTOR SIZE AWG/kcmil	TRADE SIZES (inches)					
		1/2	3/4	1	1 1/4	1 1/2	2
RHH, RHW, RHW-2	14	3	5	9	17	23	39
	12	2	4	7	14	19	32
	10	1	3	6	11	15	26
	8	1	1	3	6	8	13
	6	1	1	2	4	6	11
	4	1	1	1	3	5	8
RHH, RHW, RHW-2	3	0	1	1	3	4	7
	2	0	1	1	3	4	6
	1	0	1	1	1	2	4
	1/0	0	0	1	1	1	3
	2/0	0	0	1	1	1	3
	3/0	0	0	1	1	1	3
	4/0	0	0	0	1	1	2
TW, THHW, THW, THW-2	14	6	11	20	35	49	82
	12	5	9	15	27	38	63
	10	3	6	11	20	28	47
	8	1	3	6	11	15	26
RHH[a], RHW[a], RHW-2[a]	14	4	8	13	23	32	55
	12	3	6	10	19	26	44
	10	2	5	8	15	20	34
	8	1	3	5	9	12	20
RHH[a], RHW[a], RHW-2[a], TW, THW, THHW, THW-2	6	1	1	3	7	9	16
	4	1	1	3	5	7	12
	3	1	1	2	4	6	10
	2	1	1	1	3	5	8
	1	0	1	1	2	3	6
	1/0	0	1	1	1	3	5
RHH[a], RHW[a], RHW-2[a], TW, THW, THHW, THW-2	2/0	0	1	1	1	2	4
	3/0	0	0	1	1	1	3
	4/0	0	0	1	1	1	3
THHN, THWN, THWN-2	14	9	17	28	51	70	118
	12	6	12	20	37	51	86
	10	4	7	13	23	32	54
	8	2	4	7	13	18	31
	6	1	3	5	9	13	22
	4	1	1	3	6	8	14
	3	1	1	3	5	7	12
	2	1	1	2	4	6	10
	1	0	1	1	3	4	7
	1/0	0	1	1	2	3	6
	2/0	0	1	1	1	3	5
	3/0	0	1	1	1	2	4
	4/0	0	0	1	1	1	3
XHH, XHHW, XHHW-2	14	6	11	20	35	49	82
	12	5	9	15	27	38	63
	10	3	6	11	20	28	47
	8	1	3	6	118	15	26
	6	1	2	4		11	19

(continued)

TABLE E3904.6(9) (Annex C, Table C.9)—continued
MAXIMUM NUMBER OF CONDUCTORS IN RIGID PVC CONDUIT, SCHEDULE 80 (PVC-80)[a]

TYPE LETTERS	CONDUCTOR SIZE AWG/kcmil	TRADE SIZES (inches)					
		1/2	3/4	1	1 1/4	1 1/2	2
XHH, XHHW, XHHW-2	14	6	11	20	35	49	82
	12	5	9	15	27	38	63
	10	3	6	11	20	28	47
	8	1	3	6	11	15	26
	6	1	2	4	8	11	19
	4	1	1	3	6	8	14
	3	1	1	3	5	7	12
	2	1	1	2	4	6	10
	1	0	1	1	3	4	7
	1/0	0	1	1	2	3	6
	2/0	0	1	1	1	3	5
	3/0	0	1	1	1	2	4
	4/0	0	0	1	1	1	3

For SI: 1 inch = 25.4 mm.

a. Types RHW, and RHW-2 without outer covering.

TABLE E3904.6(10) (Annex C, Table C.10)
MAXIMUM NUMBER OF CONDUCTORS IN RIGID PVC CONDUIT SCHEDULE 40 (PVC-40)[a]

TYPE LETTERS	CONDUCTOR SIZE AWG/kcmil	TRADE SIZES (inches)					
		1/2	3/4	1	1 1/4	1 1/2	2
RHH, RHW, RHW-2	14	4	7	11	20	27	45
	12	3	5	9	16	22	37
	10	2	4	7	13	18	30
	8	1	2	4	7	9	15
	6	1	1	3	5	7	12
	4	1	1	2	4	6	10
	3	1	1	1	4	5	8
	2	1	1	1	3	4	7
RHH, RHW, RHW-2	1	0	1	1	1	3	5
	1/0	0	1	1	1	2	4
	2/0	0	0	1	1	1	3
	3/0	0	0	1	1	1	3
	4/0	0	0	1	1	1	2
TW, THHW, THW, THW-2	14	8	14	24	42	57	94
	12	6	11	18	32	44	72
	10	4	8	13	24	32	54
	8	2	4	7	13	18	30
RHH[a], RHW[a], RHW-2[a]	14	5	9	16	28	38	63
	12	4	8	13	22	30	50
	10	3	6	10	17	24	39
	8	1	3	6	10	14	23
RHH[a], RHW[a], RHW-2[a], TW, THW, THHW, THW-2	6	1	2	4	8	11	18
	4	1	1	3	6	8	13
	3	1	1	3	5	7	11
	2	1	1	2	4	6	10
	1	0	1	1	3	4	7
	1/0	0	1	1	2	3	6
	2/0	0	1	1	1	3	5
	3/0	0	1	1	1	2	4
	4/0	0	0	1	1	1	3
THHN, THWN, THWN-2	14	11	21	34	60	82	135
	12	8	15	25	43	59	99
	10	5	9	15	27	37	62
	8	3	5	9	16	21	36
THHN, THWN, THWN-2	6	1	4	6	11	15	26
	4	1	2	4	7	9	16
	3	1	1	3	6	8	13
	2	1	1	3	5	7	11
	1	1	1	1	3	5	8
	1/0	1	1	1	3	4	7
	2/0	0	1	1	2	3	6
	3/0	0	1	1	1	3	5
	4/0	0	1	1	1	2	4
XHH, XHHW, XHHW-2	14	8	14	24	42	57	94
	12	6	11	18	32	44	72
	10	4	8	13	24	32	54
	8	2	4	7	13	18	30
	6	1	3	5	10	13	22
	4	1	2	4	7	9	16
	3	1	1	3	6	8	13
	2	1	1	3	5	7	11
	1	1	1	1	3	5	8
	1/0	1	1	1	3	4	7
	2/0	0	1	1	2	3	6
	3/0	0	1	1	1	3	5
	4/0	0	1	1	1	2	4

For SI: 1 inch = 25.4 mm.

a. Types RHW, and RHW-2 without outer covering.

SECTION E3905
BOXES, CONDUIT BODIES AND FITTINGS

E3905.1 Box, conduit body or fitting—where required. A box or conduit body shall be installed at each conductor splice point, outlet, switch point, junction point and pull point except as otherwise permitted in Sections E3905.1.1 through E3905.1.6.

Fittings and connectors shall be used only with the specific wiring methods for which they are designed and listed. (300.15)

E3905.1.1 Equipment. An integral junction box or wiring compartment that is part of listed equipment shall be permitted to serve as a box or conduit body. [300.15(B)]

E3905.1.2 Protection. A box or conduit body shall not be required where cables enter or exit from conduit or tubing that is used to provide cable support or protection against physical damage. A fitting shall be provided on the end(s) of the conduit or tubing to protect the cable from abrasion. [300.15(C)]

E3905.1.3 Integral enclosure. A wiring device with integral enclosure identified for the use, having brackets that securely fasten the device to walls or ceilings of conventional on-site frame construction, for use with nonmetallic-sheathed cable, shall be permitted in lieu of a box or conduit body. [300.15(E)]

E3905.1.4 Fitting. A fitting identified for the use shall be permitted in lieu of a box or conduit body where such fitting is accessible after installation and does not contain spliced or terminated conductors. [300.15(F)]

E3905.1.5 Buried conductors. Splices and taps in buried conductors and cables shall not be required to be enclosed in a box or conduit body where installed in accordance with Section E3803.4.

E3905.1.6 Luminaires. Where a luminaire is listed to be used as a raceway, a box or conduit body shall not be required for wiring installed therein. [300.15(J)]

E3905.2 Metal boxes. Metal boxes shall be grounded. (314.4)

E3905.3 Nonmetallic boxes. Nonmetallic boxes shall be used only with cabled wiring methods with entirely nonmetallic sheaths, flexible cords and nonmetallic raceways. (314.3)

Exceptions:

1. Where internal bonding means are provided between all entries, nonmetallic boxes shall be permitted to be used with metal raceways and metal-armored cables. (314.3 Exception No. 1)
2. Where integral bonding means with a provision for attaching an equipment grounding jumper inside the box are provided between all threaded entries in nonmetallic boxes listed for the purpose, nonmetallic boxes shall be permitted to be used with metal raceways and metal-armored cables. (314.3 Exception No. 2)

E3905.3.1 Nonmetallic-sheathed cable and nonmetallic boxes. Where nonmetallic-sheathed cable is used, the cable assembly, including the sheath, shall extend into the box not less than $^1/_4$ inch (6.4 mm) through a nonmetallic-sheathed cable knockout opening. (314.7(C)]

E3905.3.2 Securing to box. Wiring methods shall be secured to the boxes. [314.17(C)]

Exception: Where nonmetallic-sheathed cable is used with boxes not larger than a nominal size of $2^1/_4$ inches by 4 inches (57 mm by 102 mm) mounted in walls or ceilings, and where the cable is fastened within 8 inches (203 mm) of the box measured along the sheath, and where the sheath extends through a cable knockout not less than $^1/_4$ inch (6.4 mm), securing the cable to the box shall not be required. [314.17(C) Exception]

E3905.3.3 Conductor rating. Nonmetallic boxes shall be suitable for the lowest temperature-rated conductor entering the box. [314.17(C)]

E3905.4 Minimum depth of boxes for outlets, devices, and utilization equipment. Outlet and device boxes shall have an approved depth to allow equipment installed within them to be mounted properly and without the likelihood of damage to conductors within the box. (314.24)

E3905.4.1 Outlet boxes without enclosed devices or utilization equipment. Outlet boxes that do not enclose devices or utilization equipment shall have an internal depth of not less than $^1/_2$ inch (12.7 mm). [314.24(A)]

E3905.4.2 Utilization equipment. Outlet and device boxes that enclose devices or utilization equipment shall have a minimum internal depth that accommodates the rearward projection of the equipment and the size of the conductors that supply the equipment. The internal depth shall include that of any extension boxes, plaster rings, or raised covers. The internal depth shall comply with all of the applicable provisions that follow. [314.24(B)]

Exception: Utilization equipment that is listed to be installed with specified boxes.

1. Large equipment. Boxes that enclose devices or utilization equipment that projects more than $1^7/_8$ inches (48 mm) rearward from the mounting plane of the box shall have a depth that is not less than the depth of the equipment plus $^1/_4$ inch (6.4 mm). [314.24(B)(1)]
2. Conductors larger than 4 AWG. Boxes that enclose devices or utilization equipment supplied by conductors larger than 4 AWG shall be identified for their specific function. [314.24(B)(2)]
3. Conductors 8, 6, or 4 AWG. Boxes that enclose devices or utilization equipment supplied by 8, 6, or 4 AWG conductors shall have an internal depth that is not less than $2^1/_{16}$ inches (52.4 mm). [314.24(B)(3)]
4. Conductors 12 or 10 AWG. Boxes that enclose devices or utilization equipment supplied by 12 or 10 AWG conductors shall have an internal depth that is not less than $1^3/_{16}$ inches (30.2 mm). Where the equipment projects rearward from the mounting plane of the box by more than 1 inch (25.4

mm), the box shall have a depth that is not less than that of the equipment plus $^1/_4$ inch (6.4 mm). [314.24(B)(4)]

5. Conductors 14 AWG and smaller. Boxes that enclose devices or utilization equipment supplied by 14 AWG or smaller conductors shall have a depth that is not less than $^{15}/_{16}$ inch (23.8 mm). [314.24(B)(5)]

E3905.5 Boxes enclosing flush-mounted devices. Boxes enclosing flush-mounted devices shall be of such design that the devices are completely enclosed at the back and all sides and shall provide support for the devices. Screws for supporting the box shall not be used for attachment of the device contained therein. (314.19)

E3905.6 Boxes at luminaire outlets. Outlet boxes used at luminaire or lampholder outlets shall be designed for the support of luminaires and lampholders and shall be installed as required by Section E3904.3. [314.27(A)]

E3905.6.1 Vertical surface outlets. Boxes used at luminaire or lampholder outlets in or on a vertical surface shall be identified and marked on the interior of the box to indicate the maximum weight of the luminaire or lamp holder that is permitted to be supported by the box if other than 50 pounds (22.7 kg). [314.27(A)(1)]

Exception: A vertically-mounted luminaire or lampholder weighing not more than 6 pounds (2.7 kg) shall be permitted to be supported on other boxes or plaster rings that are secured to other boxes, provided that the luminaire or its supporting yoke is secured to the box with not fewer than two No. 6 or larger screws. [314.27(A)(1) Exception]

E3905.6.2 Ceiling outlets. For outlets used exclusively for lighting, the box shall be designed or installed so that a luminaire or lampholder can be attached. Such boxes shall be capable of supporting a luminaire weighing up to 50 pounds (22.7 kg). A luminaire that weighs more than 50 pounds (22.7 kg) shall be supported independently of the outlet box, unless the outlet box is listed and marked on the interior of the box to indicate the maximum weight that the box is permitted to support. [314.27(A)(2)]

TABLE E3905.12.2.1 [Table 314.16(B)]
VOLUME ALLOWANCE REQUIRED PER CONDUCTOR

SIZE OF CONDUCTOR	FREE SPACE WITHIN BOX FOR EACH CONDUCTOR (cubic inches)
18 AWG	1.50
16 AWG	1.75
14 AWG	2.00
12 AWG	2.25
10 AWG	2.50
8 AWG	3.00
6 AWG	5.00

For SI: 1 cubic inch = 16.4 cm^3.

TABLE E3905.12.1 [Table 314.16(A)]
MAXIMUM NUMBER OF CONDUCTORS IN METAL BOXES[a]

BOX DIMENSIONS (inches trade size and type)	MAXIMUM CAPACITY (cubic inches)	MAXIMUM NUMBER OF CONDUCTORS[a]						
		18 Awg	16 Awg	14 Awg	12 Awg	10 Awg	8 Awg	6 Awg
$4 \times 1^1/_4$ round or octagonal	12.5	8	7	6	5	5	4	2
$4 \times 1^1/_2$ round or octagonal	15.5	10	8	7	6	6	5	3
$4 \times 2^1/_8$ round or octagonal	21.5	14	12	10	9	8	7	4
$4 \times 1^1/_4$ square	18.0	12	10	9	8	7	6	3
$4 \times 1^1/_2$ square	21.0	14	12	10	9	8	7	4
$4 \times 2^1/_8$ square	30.3	20	17	15	13	12	10	6
$4^{11}/_{16} \times {}^{11}/_4$ square	25.5	17	14	12	11	10	8	5
$4^{11}/_{16} \times {}^{11}/_2$ square	29.5	19	16	14	13	11	9	5
$4^{11}/_{16} \times 2^1/_8$ square	42.0	28	24	21	18	16	14	8
$3 \times 2 \times 1^1/_2$ device	7.5	5	4	3	3	3	2	1
$3 \times 2 \times 2$ device	10.0	6	5	5	4	4	3	2
$3 \times 2 \times 2^1/_4$ device	10.5	7	6	5	4	4	3	2
$3 \times 2 \times 2^1/_2$ device	12.5	8	7	6	5	5	4	2
$3 \times 2 \times 2^3/_4$ device	14.0	9	8	7	6	5	4	2
$3 \times 2 \times 3^1/_2$ device	18.0	12	10	9	8	7	6	3
$4 \times 2^1/_8 \times 1^1/_2$ device	10.3	6	5	5	4	4	3	2
$4 \times 2^1/_8 \times 1^7/_8$ device	13.0	8	7	6	5	5	4	2
$4 \times 2^1/_8 \times 2^1/_8$ device	14.5	9	8	7	6	5	4	2
$3^3/_4 \times 2 \times 2^1/_2$ masonry box/gang	14.0	9	8	7	6	5	4	2
$3^3/_4 \times 2 \times 3^1/_2$ masonry box/gang	21.0	14	12	10	9	8	7	4

For SI: 1 inch = 25.4 mm, 1 cubic inch = 16.4 cm^3.

a. Where volume allowances are not required by Sections E3905.12.2.2 through E3905.12.2.5.

E3905.7 Floor boxes. Where outlet boxes for receptacles are installed in the floor, such boxes shall be listed specifically for that application. [314.27(B)]

E3905.8 Boxes at fan outlets. Outlet boxes and outlet box systems used as the sole support of ceiling-suspended fans (paddle) shall be marked by their manufacturer as suitable for this purpose and shall not support ceiling-suspended fans (paddle) that weigh more than 70 pounds (31.8 kg). For outlet boxes and outlet box systems designed to support ceiling-suspended fans (paddle) that weigh more than 35 pounds (15.9 kg), the required marking shall include the maximum weight to be supported.

Where spare, separately switched, ungrounded conductors are provided to a ceiling-mounted outlet box and such box is in a location acceptable for a ceiling-suspended (paddle) fan, the outlet box or outlet box system shall be listed for sole support of a ceiling-suspended (paddle) fan. [314.27(C)]

E3905.9 Utilization equipment. Boxes used for the support of utilization equipment other than ceiling-suspended (paddle) fans shall meet the requirements of Sections E3905.6.1 and E3905.6.2 for the support of a luminaire that is the same size and weight. [314.27(D)]

Exception: Utilization equipment weighing not more than 6 pounds (2.7 kg) shall be permitted to be supported on other boxes or plaster rings that are secured to other boxes, provided that the equipment or its supporting yoke is secured to the box with not fewer than two No. 6 or larger screws. [314.27(D) Exception]

E3905.10 Conduit bodies and junction, pull and outlet boxes to be accessible. Conduit bodies and junction, pull and outlet boxes shall be installed so that the wiring therein can be accessed without removing any part of the building or structure or, in underground circuits, without excavating sidewalks, paving, earth or other substance used to establish the finished grade. (314.29)

Exception: Boxes covered by gravel, light aggregate or noncohesive granulated soil shall be listed for the application, and the box locations shall be effectively identified and access shall be provided for excavation. (314.29 Exception)

E3905.11 Damp or wet locations. In damp or wet locations, boxes, conduit bodies and fittings shall be placed or equipped so as to prevent moisture from entering or accumulating within the box, conduit body or fitting. Boxes, conduit bodies and fittings installed in wet locations shall be listed for use in wet locations. Where drainage openings are installed in the field in boxes or conduit bodies listed for use in damp or wet locations, such openings shall be approved and not larger than $^1/_4$ inch (6.4 mm). For listed drain fittings, larger openings are permitted where installed in the field in accordance with the manufacturer's instructions. (314.15)

E3905.12 Number of conductors in outlet, device, and junction boxes, and conduit bodies. Boxes and conduit bodies shall be of an approved size to provide free space for all enclosed conductors. In no case shall the volume of the box, as calculated in Section E3905.12.1, be less than the box fill calculation as calculated in Section E3905.12.2. The minimum volume for conduit bodies shall be as calculated in Section E3905.12.3. The provisions of this section shall not apply to terminal housings supplied with motors or generators. (314.16)

E3905.12.1 Box volume calculations. The volume of a wiring enclosure (box) shall be the total volume of the assembled sections, and, where used, the space provided by plaster rings, domed covers, extension rings, etc., that are marked with their volume in cubic inches or are made from boxes the dimensions of which are listed in Table E3905.12.1. [314.16(A)]

E3905.12.1.1 Standard boxes. The volumes of standard boxes that are not marked with a cubic-inch capacity shall be as given in Table E3905.12.1. [314.16(A)(1)]

E3905.12.1.2 Other boxes. Boxes 100 cubic inches (1640 cm^3) or less, other than those described in Table E3905.12.1, and nonmetallic boxes shall be durably and legibly marked by the manufacturer with their cubic-inch capacity. Boxes described in Table E3905.12.1 that have a larger cubic inch capacity than is designated in the table shall be permitted to have their cubic-inch capacity marked as required by this section. [314.16(A)(2)]

E3905.12.2 Box fill calculations. The volumes in Section E3905.12.2.1 through Section E3905.12.2.5, as applicable, shall be added together. No allowance shall be required for small fittings such as locknuts and bushings. [314.16(B)]

E3905.12.2.1 Conductor fill. Each conductor that originates outside the box and terminates or is spliced within the box shall be counted once, and each conductor that passes through the box without splice or termination shall be counted once. Each loop or coil of unbroken conductor having a length equal to or greater than twice that required for free conductors by Section E3406.11.3, shall be counted twice. The conductor fill, in cubic inches, shall be computed using Table E3905.12.2.1. A conductor, no part of which leaves the box, shall not be counted. [314.16(B)(1)]

Exception: An equipment grounding conductor or not more than four fixture wires smaller than No. 14, or both, shall be permitted to be omitted from the calculations where such conductors enter a box from a domed fixture or similar canopy and terminate within that box. [314.16(B)(1) Exception]

E3905.12.2.2 Clamp fill. Where one or more internal cable clamps, whether factory or field supplied, are present in the box, a single volume allowance in accordance with Table E3905.12.2.1 shall be made based on the largest conductor present in the box. An allowance shall not be required for a cable connector having its clamping mechanism outside of the box. A clamp assembly that incorporates a cable termination for the cable conductors shall be listed and marked for use with specific nonmetallic boxes. Conductors that originate within the clamp assembly shall be included in conductor fill calculations provided in Section

E3905.12.2.1 as though they entered from outside of the box. The clamp assembly shall not require a fill allowance, but, the volume of the portion of the assembly that remains within the box after installation shall be excluded from the box volume as marked in accordance with Section E3905.12.1.2. [314.16(B)(2)]

E3905.12.2.3 Support fittings fill. Where one or more fixture studs or hickeys are present in the box, a single volume allowance in accordance with Table E3905.12.2.1 shall be made for each type of fitting based on the largest conductor present in the box. [314.16(B)(3)]

E3905.12.2.4 Device or equipment fill. For each yoke or strap containing one or more devices or equipment, a double volume allowance in accordance with Table E3905.12.2.1 shall be made for each yoke or strap based on the largest conductor connected to a device(s) or equipment supported by that yoke or strap. For a device or utilization equipment that is wider than a single 2-inch (51 mm) device box as described in Table E3905.12.1, a double volume allowance shall be made for each ganged portion required for mounting of the device or equipment. [314.16(B)(4)]

E3905.12.2.5 Equipment grounding conductor fill. Where one or more equipment grounding conductors or equipment bonding jumpers enters a box, a single volume allowance in accordance with Table E3905.12.2.1 shall be made based on the largest equipment grounding conductor or equipment bonding jumper present in the box. [314.16(B)(5)]

E3905.12.3 Conduit bodies. Conduit bodies enclosing 6 AWG conductors or smaller, other than short-radius conduit bodies, shall have a cross-sectional area not less than twice the cross-sectional area of the largest conduit or tubing to which they can be attached. The maximum number of conductors permitted shall be the maximum number permitted by Section E3904.6 for the conduit to which it is attached. [314.16(C)(1)]

E3905.12.3.1 Splices, taps or devices. Only those conduit bodies that are durably and legibly marked by the manufacturer with their cubic inch capacity shall be permitted to contain splices, taps or devices. The maximum number of conductors shall be calculated using the same procedure for similar conductors in other than standard boxes. [314.16(C)(2)]

E3905.12.3.2 Short-radius conduit bodies. Conduit bodies such as capped elbows and service-entrance elbows that enclose conductors 6 AWG or smaller and that are only intended to enable the installation of the raceway and the contained conductors, shall not contain splices, taps, or devices and shall be of sufficient size to provide free space for all conductors enclosed in the conduit body. [314.16(C)(3)]

SECTION E3906
INSTALLATION OF BOXES, CONDUIT BODIES AND FITTINGS

E3906.1 Conductors entering boxes, conduit bodies or fittings. Conductors entering boxes, conduit bodies or fittings shall be protected from abrasion. (314.17)

E3906.1.1 Insulated fittings. Where raceways contain 4 AWG or larger insulated circuit conductors and these conductors enter a cabinet, box enclosure, or raceway, the conductors shall be protected by an identified fitting providing a smoothly rounded insulating surface, unless the conductors are separated from the fitting or raceway by identified insulating material securely fastened in place. [300.4(G)]

Exception: Where threaded hubs or bosses that are an integral part of a cabinet, box enclosure, or raceway provide a smoothly rounded or flared entry for conductors. [300.4(G) Exception]

Conduit bushings constructed wholly of insulating material shall not be used to secure a fitting or raceway. The insulating fitting or insulating material shall have a temperature rating not less than the insulation temperature rating of the installed conductors. [330.4(G)]

E3906.2 Openings. Openings through which conductors enter shall be closed in an approved manner. [314.17(A)]

E3906.3 Metal boxes and conduit bodies. Where raceway or cable is installed with metal boxes, or conduit bodies, the raceway or cable shall be secured to such boxes and conduit bodies. [314.17(B)]

E3906.4 Unused openings. Unused openings other than those intended for the operation of equipment, those intended for mounting purposes, or those permitted as part of the design for listed equipment, shall be closed to afford protection substantially equivalent to that of the wall of the equipment. Metal plugs or plates used with nonmetallic boxes or conduit bodies shall be recessed at least $^1/_4$ inch (6.4 mm) from the outer surface of the box or conduit body. [110.12(A)]

E3906.5 In wall or ceiling. In walls or ceilings of concrete, tile or other noncombustible material, boxes employing a flush-type cover or faceplate shall be installed so that the front edge of the box, plaster ring, extension ring, or listed extender will not be set back from the finished surface more than $^1/_4$ inch (6.4 mm). In walls and ceilings constructed of wood or other combustible material, boxes, plaster rings, extension rings and listed extenders shall be flush with the finished surface or project therefrom. (314.20)

E3906.6 Noncombustible surfaces. Openings in noncombustible surfaces that accommodate boxes employing a flush-type cover or faceplate shall be made so that there are no gaps or open spaces greater than $^1/_8$ inch (3.2 mm) around the edge of the box. (314.21)

E3906.7 Surface extensions. Surface extensions shall be made by mounting and mechanically securing an extension ring over the box. (314.22)

Exception: A surface extension shall be permitted to be made from the cover of a flush-mounted box where the cover is designed so it is unlikely to fall off, or be removed if its securing means becomes loose. The wiring method shall be flexible for an approved length that permits removal of the cover and provides access to the box interior and shall be arranged so that any bonding or grounding continuity is independent of the connection between the box and cover. (314.22 Exception)

E3906.8 Supports. Boxes and enclosures shall be supported in accordance with one or more of the provisions in Sections E3906.8.1 through E3906.8.6. (314.23)

E3906.8.1 Surface mounting. An enclosure mounted on a building or other surface shall be rigidly and securely fastened in place. If the surface does not provide rigid and secure support, additional support in accordance with other provisions of Section E3906.8 shall be provided. [314.23(A)]

E3906.8.2 Structural mounting. An enclosure supported from a structural member or from grade shall be rigidly supported either directly, or by using a metal, polymeric or wood brace. [314.23(B)]

E3906.8.2.1 Nails and screws. Nails and screws, where used as a fastening means, shall be attached by using brackets on the outside of the enclosure, or they shall pass through the interior within $^1/_4$ inch (6.4 mm) of the back or ends of the enclosure. Screws shall not be permitted to pass through the box except where exposed threads in the box are protected by an approved means to avoid abrasion of conductor insulation. [314.23(B)(1)]

E3906.8.2.2 Braces. Metal braces shall be protected against corrosion and formed from metal that is not less than 0.020 inch (0.508 mm) thick uncoated. Wood braces shall have a cross section not less than nominal 1 inch by 2 inches (25.4 mm by 51 mm). Wood braces in wet locations shall be treated for the conditions. Polymeric braces shall be identified as being suitable for the use. [314.23(B)(2)]

E3906.8.3 Mounting in finished surfaces. An enclosure mounted in a finished surface shall be rigidly secured there to by clamps, anchors, or fittings identified for the application. [314.23(C)]

E3906.8.4 Raceway supported enclosures without devices or fixtures. An enclosure that does not contain a device(s), other than splicing devices, or support a luminaire, lampholder or other equipment, and that is supported by entering raceways shall not exceed 100 cubic inches (1640 cm^3) in size. The enclosure shall have threaded entries or identified hubs. The enclosure shall be supported by two or more conduits threaded wrenchtight into the enclosure or hubs. Each conduit shall be secured within 3 feet (914 mm) of the enclosure, or within 18 inches (457 mm) of the enclosure if all entries are on the same side of the enclosure. [314.23(E)]

Exception: Rigid metal, intermediate metal, or rigid polyvinyl chloride nonmetallic conduit or electrical metallic tubing shall be permitted to support a conduit body of any size, provided that the conduit body is not larger in trade size than the largest trade size of the supporting conduit or electrical metallic tubing. [314.23(E) Exception]

E3906.8.5 Raceway supported enclosures, with devices or luminaire. An enclosure that contains a device(s), other than splicing devices, or supports a luminaire, lampholder or other equipment and is supported by entering raceways shall not exceed 100 cubic inches (1640 cm^3) in size. The enclosure shall have threaded entries or identified hubs. The enclosure shall be supported by two or more conduits threaded wrench-tight into the enclosure or hubs. Each conduit shall be secured within 18 inches (457 mm) of the enclosure. [314.23(F)]

Exceptions:

1. Rigid metal or intermediate metal conduit shall be permitted to support a conduit body of any size, provided that the conduit bodies are not larger in trade size than the largest trade size of the supporting conduit. [314.23(F) Exception No. 1]
2. An unbroken length(s) of rigid or intermediate metal conduit shall be permitted to support a box used for luminaire or lampholder support, or to support a wiring enclosure that is an integral part of a luminaire and used in lieu of a box in accordance with Section E3905.1.1, where all of the following conditions are met:
   - 2.1. The conduit is securely fastened at a point so that the length of conduit beyond the last point of conduit support does not exceed 3 feet (914 mm).
   - 2.2. The unbroken conduit length before the last point of conduit support is 12 inches (305 mm) or greater, and that portion of the conduit is securely fastened at some point not less than 12 inches (305 mm) from its last point of support.
   - 2.3. Where accessible to unqualified persons, the luminaire or lampholder, measured to its lowest point, is not less than 8 feet (2438 mm) above grade or standing area and at least 3 feet (914 mm) measured horizontally to the 8-foot (2438 mm) elevation from windows, doors, porches, fire escapes, or similar locations.
   - 2.4. A luminaire supported by a single conduit does not exceed 12 inches (305 mm) in any direction from the point of conduit entry.
   - 2.5. The weight supported by any single conduit does not exceed 20 pounds (9.1 kg).

2.6. At the luminaire or lampholder end, the conduit(s) is threaded wrenchtight into the box, conduit body, or integral wiring enclosure, or into hubs identified for the purpose. Where a box or conduit body is used for support, the luminaire shall be secured directly to the box or conduit body, or through a threaded conduit nipple not over 3 inches (76 mm) long. [314.23(F) Exception No. 2]

E3906.8.6 Enclosures in concrete or masonry. An enclosure supported by embedment shall be identified as being suitably protected from corrosion and shall be securely embedded in concrete or masonry. [314.23(G)]

E3906.9 Covers and canopies. Outlet boxes shall be effectively closed with a cover, faceplate or fixture canopy. Screws used for the purpose of attaching covers, or other equipment to the box shall be either machine screws matching the thread gauge or size that is integral to the box or shall be in accordance with the manufacturer's instructions. (314.25)

E3906.10 Covers and plates. Covers and plates shall be nonmetallic or metal. Metal covers and plates shall be grounded. [314.25(A)]

E3906.11 Exposed combustible finish. Combustible wall or ceiling finish exposed between the edge of a fixture canopy or pan and the outlet box shall be covered with noncombustible material. [314.25(B)]

SECTION E3907
CABINETS AND PANELBOARDS

E3907.1 Switch and overcurrent device enclosures with splices, taps, and feed-through conductors. Where the wiring space of enclosures for switches or overcurrent devices contains conductors that are feeding through, spliced, or tapping off to other enclosures, switches, or overcurrent devices, all of the following conditions shall apply:

1. The total area of all conductors installed at any cross section of the wiring space shall not exceed 40 percent of the cross-sectional area of that space.
2. The total area of all conductors, splices, and taps installed at any cross section of the wiring space shall not exceed 75 percent of the cross-sectional area of that space.
3. A warning label shall be applied to the enclosure that identifies the closest disconnecting means for any feed-through conductors. (312.8)

E3907.2 Damp and wet locations. In damp or wet locations, cabinets and panelboards of the surface type shall be placed or equipped so as to prevent moisture or water from entering and accumulating within the cabinet, and shall be mounted to provide an air-space not less than $^1/_4$ inch (6.4 mm) between the enclosure and the wall or other supporting surface. Cabinets installed in wet locations shall be weatherproof. For enclosures in wet locations, raceways and cables entering above the level of uninsulated live parts shall be installed with fittings listed for wet locations. (312.2)

Exception: Nonmetallic enclosures installed on concrete, masonry, tile, or similar surfaces shall not be required to be installed with an air space between the enclosure and the wall or supporting surface. (312.2 Exception)

E3907.3 Position in wall. In walls of concrete, tile or other noncombustible material, cabinets and panelboards shall be installed so that the front edge of the cabinet will not set back of the finished surface more than $^1/_4$ inch (6.4 mm). In walls constructed of wood or other combustible material, cabinets shall be flush with the finished surface or shall project therefrom. (312.3)

E3907.4 Repairing noncombustible surfaces. Noncombustible surfaces that are broken or incomplete shall be repaired so that there will not be gaps or open spaces greater than $^1/_8$ inch (3.2 mm) at the edge of the cabinet or cutout box employing a flush-type cover. (312.4)

E3907.5 Unused openings. Unused openings, other than those intended for the operation of equipment, those intended for mounting purposes, and those permitted as part of the design for listed equipment, shall be closed to afford protection substantially equivalent to that of the wall of the equipment. Metal plugs and plates used with nonmetallic cabinets shall be recessed at least $^1/_4$ inch (6.4 mm) from the outer surface. Unused openings for circuit breakers and switches shall be closed using identified closures, or other approved means that provide protection substantially equivalent to the wall of the enclosure. (110.12(A)]

E3907.6 Conductors entering cabinets. Conductors entering cabinets and panelboards shall be protected from abrasion and shall comply with Section E3906.1.1. (312.5)

E3907.7 Openings to be closed. Openings through which conductors enter cabinets, panelboards and meter sockets shall be closed in an approved manner. [312.5(A)]

E3907.8 Cables. Where cables are used, each cable shall be secured to the cabinet, panelboard, cutout box, or meter socket enclosure. [312.5(C)]

Exception: Cables with entirely nonmetallic sheaths shall be permitted to enter the top of a surface-mounted enclosure through one or more sections of rigid raceway not less than 18 inches (457 mm) nor more than 10 feet (3048 mm) in length, provided all the following conditions are met:

1. Each cable is fastened within 12 inches (305 mm), measured along the sheath, of the outer end of the raceway.
2. The raceway extends directly above the enclosure and does not penetrate a structural ceiling.
3. A fitting is provided on each end of the raceway to protect the cable(s) from abrasion and the fittings remain accessible after installation.
4. The raceway is sealed or plugged at the outer end using approved means so as to prevent access to the enclosure through the raceway.
5. The cable sheath is continuous through the raceway and extends into the enclosure beyond the fitting not less than $^1/_4$ inch (6.4 mm).

6. The raceway is fastened at its outer end and at other points in accordance with Section E3802.1.
7. The allowable cable fill shall not exceed that permitted by Table E3907.8. A multiconductor cable having two or more conductors shall be treated as a single conductor for calculating the percentage of conduit fill area. For cables that have elliptical cross sections, the cross-sectional area calculation shall be based on the major diameter of the ellipse as a circle diameter. [312.5(C) Exception]

TABLE E3907.8 (Chapter 9, Table 1)
PERCENT OF CROSS SECTION OF CONDUIT AND TUBING FOR CONDUCTORS

NUMBER OF CONDUCTORS	MAXIMUM PERCENT OF CONDUIT AND TUBING AREA FILLED BY CONDUCTORS
1	53
2	31
Over 2	40

E3907.9 Wire-bending space within an enclosure containing a panelboard. Wire-bending space within an enclosure containing a panelboard shall comply with the requirements of Sections E3907.9.1 through E3907.9.3.

E3907.9.1 Top and bottom wire-bending space. The top and bottom wire-bending space for a panelboard enclosure shall be sized in accordance with Table E3907.9.1(1) based on the largest conductor entering or leaving the enclosure. [408.55 (A)]

Exceptions:

1. For a panelboard rated at 225 amperes or less and designed to contain not more than 42 overcurrent devices, either the top or bottom wire-bending space shall be permitted to be sized in accordance with Table E3907.9.1(2). For the purposes of this exception, a 2-pole or a 3-pole circuit breaker shall be considered as two or three overcurrent devices, respectively. [408.55(A) Exception No. 1]
2. For any panelboard, either the top or bottom wire-bending space shall be permitted to be sized in accordance with Table E3907.9.1(2) where the wire-bending space on at least one side is sized in accordance with Table E3907.9.1(1) based on the largest conductor to be terminated in any side wire-bending space. [408.55(A) Exception No. 2]
3. Where the panelboard is designed and constructed for wiring using only a single 90-degree bend for each conductor, including the grounded circuit conductor, and the wiring diagram indicates and specifies the method of wiring that must be used, the top and bottom wire-bending space shall be permitted to be sized in accordance with Table E3907.9.1(2). [408.55(A) Exception No. 3]
4. Where there are no conductors terminated in that space, either the top or the bottom wire-bending space, shall be permitted to be sized in accordance with Table E3907.9.1(2). [408.55(A) Exception No. 4]

E3907.9.2 Side wire-bending space. Side wire-bending space shall be in accordance with Table E3907.9.1(2) based on the largest conductor to be terminated in that space. [408.55(B)]

E3907.9.3 Back wire-bending space. The distance between the center of the rear entry and the nearest termination for the entering conductors shall be not less than the distance given in Table E3907.9.1(1). Where a raceway or cable entry is in the wall of the enclosure, opposite a removable cover, the distance from that wall to the cover shall be permitted to comply with the distance required in Table E3907.9.1(2). [408.55 (C)]

SECTION E3908
GROUNDING

E3908.1 Metal enclosures. Metal enclosures of conductors, devices and equipment shall be connected to the equipment grounding conductor. (250.86)

Exceptions:

1. Short sections of metal enclosures or raceways used to provide cable assemblies with support or protection against physical damage. (250.86 Exception No. 2)
2. A metal elbow that is installed in an underground installation of rigid nonmetallic conduit and is isolated from possible contact by a minimum cover of 18 inches (457 mm) to any part of the elbow or that is encased in not less than 2 inches (51 mm) of concrete. (250.86 Exception No. 3)

E3908.2 Equipment fastened in place or connected by permanent wiring methods (fixed). Exposed, normally noncurrent-carrying metal parts of fixed equipment supplied by or enclosing conductors or components that are likely to become energized shall be connected to the equipment grounding conductor where any of the following conditions apply:

1. Where within 8 feet (2438 mm) vertically or 5 feet (1524 mm) horizontally of earth or grounded metal objects and subject to contact by persons;
2. Where located in a wet or damp location and not isolated; or
3. Where in electrical contact with metal. (250.110)

E3908.3 Specific equipment fastened in place (fixed) or connected by permanent wiring methods. Exposed, normally noncurrent-carrying metal parts of the following equipment and enclosures shall be connected to an equipment grounding conductor:

1. Luminaires as provided in Chapter 40. [250.112(J)]
2. Motor-operated water pumps, including submersible types.Where a submersible pump is used in a metal well casing, the well casing shall be connected to the pump circuit equipment grounding conductor. [250.112(L)]

TABLE E3907.9.1(1) [Table 312.6(B)]
MINIMUM WIRE-BENDING SPACE AT TERMINALS (see note 1)

WIRE SIZE (AWG or kcmil)		WIRES PER TERMINAL			
All other conductors	Compact stranded AA-8000 aluminum alloy conductors (see Note 3)	One (see note 2)		Two	
		Inches	mm	Inches	mm
14-10	12-8	Not specified	Not specified	—	—
8	6	$1^1/_2$	38.1	—	—
6	4	2	50.8	—	—
4	2	3	76.2	—	—
3	1	3	76.2	—	—
2	1/0	$3^1/_2$	88.9	—	—
1	2/0	$4^1/_2$	114	—	—
1/0	3/0	$5^1/_2$	140	$5^1/_2$	140
2/0	4/0	6	152	6	152
3/0	250	$6^1/_2$[a]	165[a]	$6^1/_2$[a]	165[a]
4/0	300	7[b]	178[b]	$7^1/_2$[c]	190[c]
250	350	$8^1/_2$[d]	216[d]	$8^1/_2$[d]	229[d]
300	400	10[c]	254[c]	10[d]	254[d]
350	500	12[c]	305[c]	12[c]	305[c]
400	600	13[c]	330[c]	13[c]	330[c]
500	700-750	14[c]	356[c]	14[c]	356[c]
600	800-900	15[c]	381[c]	16[c]	406[c]
700	1000	16[c]	406[c]	18[c]	457[c]

1. Bending space at terminals shall be measured in a straight line from the end of the lug or wire connector in a direction perpendicular to the enclosure wall.
2. For removable and lay-in wire terminals intended for only one wire, bending space shall be permitted to be reduced by the following number of millimeters (inches):
   a. $^1/_2$ inches (12.7 mm)
   b. 1 inches (25.4 mm)
   c. $1^1/_2$ inches (38.1 mm)
   d. 2 inches (50.8 mm)
3. This column shall be permitted to determine the required wire-bending space for compact stranded aluminum conductors in sizes up to 1000 kcmil and manufactured using AA-8000 series electrical grade aluminum alloy conductor material.

TABLE E3907.9.1(2) [Table 312.6(A)]
MINIMUM WIRE-BENDING SPACE AT TERMINALS AND MINIMUM WIDTH OF WIRING GUTTERS (see note 1)

WIRE SIZE (AWG or kcmil)	WIRES PER TERMINAL			
	One		Two	
	inches	mm	Inches	mm
14-10	Not specified	Not specified	—	—
8-6	$1^1/_2$	38.1	—	—
4-3	2	50.8	—	—
2	$2^1/_2$	63.5	—	—
1	2	76.2	—	—
1/0-2/0	$3^1/_2$	88.9	5	127
3/0-4/0	4	102	6	152
250	$4^1/_2$	114	6	152
300-350	5	127	8	203
400-500	6	152	8	203
600-700	8	203	10	254

1. Bending space at terminals shall be measured in a straight line from the end of the lug or wire connector in the direction that the wire leaves the terminal to the wall, barrier, or obstruction.

E3908.4 Effective ground-fault current path. Electrical equipment and wiring and other electrically conductive material likely to become energized shall be installed in a manner that creates a low-impedance circuit facilitating the operation of the overcurrent device or ground detector for high-impedance grounded systems. Such circuit shall be capable of safely carrying the maximum ground-fault current likely to be imposed on it from any point on the wiring system where a ground fault might occur to the electrical supply source. [250.(A)(5)]

E3908.5 Earth as a ground-fault current path. The earth shall not be considered as an effective ground-fault current path. [250.4(A)(5)]

E3908.6 Load-side grounded conductor neutral. A grounded conductor shall not be connected to normally non-current-carrying metal parts of equipment, to equipment grounding conductor(s), or be reconnected to ground on the load side of the service disconnecting means. [250.24(A)(5)]

E3908.7 Load-side equipment. A grounded circuit conductor shall not be used for grounding noncurrent-carrying metal

parts of equipment on the load side of the service disconnecting means. [250.142(B)]

E3908.8 Types of equipment grounding conductors. The equipment grounding conductor run with or enclosing the circuit conductors shall be one or more or a combination of the following:

1. A copper, aluminum or copper-clad conductor.This conductor shall be solid or stranded; insulated, covered or bare; and in the form of a wire or a busbar of any shape. [250.118(1)]
2. Rigid metal conduit. [250.118(2)]
3. Intermediate metal conduit. [250.118(3)]
4. Electrical metallic tubing. [250.118(4)]
5. Armor of Type AC cable in accordance with Section E3908.4. [250.118(8)]
6. Type MC cable that provides an effective ground-fault current path in accordance with one or more of the following:
   - 6.1. It contains an insulated or uninsulated equipment grounding conductor in compliance with Item 1 of this section.
   - 6.2. The combined metallic sheath and uninsulated equipment grounding/bonding conductor of interlocked metal tape-type MC cable that is listed and identified as an equipment grounding conductor.
   - 6.3. The metallic sheath or the combined metallic sheath and equipment grounding conductors of the smooth or corrugated tube-type MC cable that is listed and identified as an equipment grounding conductor. [250.118(10)]
7. Other electrically continuous metal raceways and auxiliary gutters. [250.118(13)]
8. Surface metal raceways listed for grounding. [250.118(14)]

E3908.8.1 Flexible metal conduit. Flexible metal conduit shall be permitted as an equipment grounding conductor where all of the following conditions are met:

1. The conduit is terminated in listed fittings.
2. The circuit conductors contained in the conduit are protected by overcurrent devices rated at 20 amperes or less.
3. The combined length of flexible metal conduit and flexible metallic tubing and liquid-tight flexible metal conduit in the same ground return path does not exceed 6 feet (1829 mm).

If used to connect equipment where flexibility is necessary to minimize the transmission of vibration from equipment or to provide flexibility for equipment that requires movement after installation, an equipment grounding conductor shall be installed. [250.118(5)]

E3908.8.2 Liquid-tight flexible metal conduit. Liquid-tight flexible metal conduit shall be permitted as an equipment grounding conductor where all of the following conditions are met:

1. The conduit is terminated in listed fittings.
2. For trade sizes $^3/_8$ through $^1/_2$ (metric designator 12 through 16), the circuit conductors contained in the conduit are protected by overcurrent devices rated at 20 amperes or less.
3. For trade sizes $^3/_4$ through $1^1/_4$ (metric designator 21 through 35), the circuit conductors contained in the conduit are protected by overcurrent devices rated at not more than 60 amperes and there is no flexible metal conduit, flexible metallic tubing, or liquid-tight flexible metal conduit in trade sizes $^3/_8$ inch or $^1/_2$ inch (9.5 mm through 12.7 mm) in the ground fault current path.
4. The combined length of flexible metal conduit and flexible metallic tubing and liquid-tight flexible metal conduit in the same ground return path does not exceed 6 feet (1829 mm).

If used to connect equipment where flexibility is necessary to minimize the transmission of vibration from equipment or to provide flexibility for equipment that requires movement after installation, an equipment grounding conductor shall be installed. [250.118(6)]

E3908.8.3 Nonmetallic sheathed cable (Type NM). In addition to the insulated conductors, the cable shall have an insulated, covered, or bare equipment grounding conductor. Equipment grounding conductors shall be sized in accordance with Table E3908.12. (334.108)

E3908.9 Equipment fastened in place or connected by permanent wiring methods. Noncurrent-carrying metal parts of equipment, raceways and other enclosures, where required to be grounded, shall be grounded by one of the following methods: (250.134)

1. By any of the equipment grounding conductors permitted by Sections E3908.8 through E3908.8.3. [250.134(A)]
2. By an equipment grounding conductor contained within the same raceway, cable or cord, or otherwise run with the circuit conductors. Equipment grounding conductors shall be identified in accordance with Section E3407.2. [250.134(B)]

E3908.10 Methods of equipment grounding. Fixtures and equipment shall be considered grounded where mechanically connected to an equipment grounding conductor as specified in Sections E3908.8 through E3908.8.3. Wire type equipment grounding conductors shall be sized in accordance with Section E3908.12. (250 Part VII)

E3908.11 Equipment grounding conductor installation. Where an equipment grounding conductor consists of a raceway, cable armor or cable sheath or where such conductor is a wire within a raceway or cable, it shall be installed in accordance with the provisions of this chapter and Chapters 34 and 38 using fittings for joints and terminations approved for installation with the type of raceway or cable used. All con-

nections, joints and fittings shall be made tight using suitable tools. (250.120)

E3908.12 Equipment grounding conductor size. Copper, aluminum and copper-clad aluminum equipment grounding conductors of the wire type shall be not smaller than shown in Table E3908.12, but they shall not be required to be larger than the circuit conductors supplying the equipment. Where a raceway or a cable armor or sheath is used as the equipment grounding conductor, as provided in Section E3908.8, it shall comply with Section E3908.4. Where ungrounded conductors are increased in size from the minimum size that has sufficient ampacity for the intended installation, wire type equipment grounding conductors shall be increased proportionally according to the circular mil area of the ungrounded conductors. [250.122(A) and (B)]

E3908.12.1 Multiple circuits. Where a single equipment grounding conductor is run with multiple circuits in the same raceway or cable, it shall be sized for the largest overcurrent device protecting conductors in the raceway or cable. [250.122(C)]

E3908.13 Continuity and attachment of equipment grounding conductors to boxes. Where circuit conductors are spliced within a box or terminated on equipment within or supported by a box, any equipment grounding conductors associated with the circuit conductors shall be connected within the box or to the box with devices suitable for the use. Connections depending solely on solder shall not be used. Splices shall be made in accordance with Section E3406.10 except that insulation shall not be required. The arrangement of grounding connections shall be such that the disconnection or removal of a receptacle, luminaire or other device fed from the box will not interfere with or interrupt the grounding continuity. [250.146(A) and (C)]

E3908.14 Connecting receptacle grounding terminal to box. An equipment bonding jumper, sized in accordance with Table E3908.12 based on the rating of the overcurrent device protecting the circuit conductors, shall be used to connect the grounding terminal of a grounding-type receptacle to a grounded box except where grounded in accordance with one of the following: (250.146)

1. Surface mounted box.Where the box is mounted on the surface, direct metal-to-metal contact between the device yoke and the box shall be permitted to ground the receptacle to the box. At least one of the insulating washers shall be removed from receptacles that do not have a contact yoke or device designed and listed to be used in conjunction with the supporting screws to establish the grounding circuit between the device yoke and flush-type boxes. This provision shall not apply to cover-mounted receptacles except where the box and cover combination are listed as providing satisfactory ground continuity between the box and the receptacle. A listed exposed work cover shall be considered to be the grounding and bonding means where the device is attached to the cover with at least two fasteners that are permanent, such as a rivet or have a thread locking or screw locking means and where the cover mounting holes are located on a flat non-raised portion of the cover. [250.146(A)]
2. Contact devices or yokes. Contact devices or yokes designed and listed for the purpose shall be permitted in conjunction with the supporting screws to establish equipment bonding between the device yoke and flush-type boxes. [250.146(B)]
3. Floor boxes.The receptacle is installed in a floor box designed for and listed as providing satisfactory ground continuity between the box and the device. [250.146(C)]

E3908.15 Metal boxes. A connection shall be made between the one or more equipment grounding conductors and a metal box by means of a grounding screw that shall be used for no other purpose, equipment listed for grounding or by means of a listed grounding device. Where screws are used to connect grounding conductors or connection devices to boxes, such screws shall be one or more of the following: [250.148(C)]

1. Machine screw-type fasteners that engage not less than two threads.
2. Machine screw-type fasteners that are secured with a nut.
3. Thread-forming machine screws that engage not less than two threads in the enclosure. [250.8(5) and (6)]

E3908.16 Nonmetallic boxes. One or more equipment grounding conductors brought into a nonmetallic outlet box shall be arranged to allow connection to fittings or devices installed in that box. [250.148(D)]

TABLE E3908.12 (Table 250.122)
EQUIPMENT GROUNDING CONDUCTOR SIZING

RATING OR SETTING OF AUTOMATIC OVERCURRENT DEVICE IN CIRCUIT AHEAD OF EQUIPMENT, CONDUIT, ETC., NOT EXCEEDING THE FOLLOWING RATINGS (amperes)	MINIMUM SIZE	
	Copper wire No. (AWG)	Aluminum or copper-clad aluminum wire No. (AWG)
15	14	12
20	12	10
60	10	8
100	8	6
200	6	4
300	4	2
400	3	1

E3908.17 Clean surfaces. Nonconductive coatings such as paint, lacquer and enamel on equipment to be grounded shall be removed from threads and other contact surfaces to ensure electrical continuity or the equipment shall be connected by means of fittings designed so as to make such removal unnecessary. (250.12)

E3908.18 Bonding other enclosures. Metal raceways, cable armor, cable sheath, enclosures, frames, fittings and other metal noncurrent-carrying parts that serve as equipment grounding conductors, with or without the use of supplementary equipment grounding conductors, shall be effectively bonded where necessary to ensure electrical continuity and the capacity to conduct safely any fault current likely to be imposed on them. Any nonconductive paint, enamel and similar coating shall be removed at threads, contact points and contact surfaces, or connections shall be made by means of fittings designed so as to make such removal unnecessary. [250.96(A)]

E3908.19 Size of equipment bonding jumper on load side of an overcurrent device. The equipment bonding jumper on the load side of an overcurrent devices shall be sized, as a minimum, in accordance with Table E3908.12, but shall not be required to be larger than the circuit conductors supplying the equipment. An equipment bonding conductor shall be not smaller than No. 14 AWG.

A single common continuous equipment bonding jumper shall be permitted to connect two or more raceways or cables where the bonding jumper is sized in accordance with Table E3908.12 for the largest overcurrent device supplying circuits therein. [250.102(D) and 250.122]

E3908.20 Installation equipment bonding jumper. Bonding jumpers or conductors and equipment bonding jumpers shall be installed either inside or outside of a raceway or an enclosure in accordance with Sections E3908.20.1 and E3908.20.2. [250.102(E)]

E3908.20.1 Inside raceway or enclosure. Where installed inside a raceway or enclosure, equipment bonding jumpers and bonding jumpers or conductors shall comply with the requirements of Sections E3407.2 and E3908.13. [250.102(E)(1)]

E3908.20.2 Outside raceway or enclosure. Where installed outside of a raceway or enclosure, the length of the bonding jumper or conductor or equipment bonding jumper shall not exceed 6 feet (1829 mm) and shall be routed with the raceway or enclosure. [250.102(E)(2)]

Equipment bonding jumpers and supply-side bonding jumpers installed for bonding grounding electrodes and installed at outdoor pole locations for the purpose of bonding or grounding isolated sections of metal raceways or elbows installed in exposed risers of metal conduit or other metal raceway, shall not be limited in length and shall not be required to be routed with a raceway or enclosure. [250.102(E)(2) Exception]

E3908.20.3 Protection. Bonding jumpers or conductors and equipment bonding jumpers shall be installed in accordance with Section E3610.2. [250.102(E)(3)]

SECTION E3909
FLEXIBLE CORDS

E3909.1 Where permitted. Flexible cords shall be used only for the connection of appliances where the fastening means and mechanical connections of such appliances are designed to permit ready removal for maintenance, repair or frequent interchange and the appliance is listed for flexible cord connection. Flexible cords shall not be installed as a substitute for the fixed wiring of a structure; shall not be run through holes in walls, structural ceilings, suspended ceilings, dropped ceilings or floors; shall not be concealed behind walls, floors, ceilings or located above suspended or dropped ceilings. (400.7 and 400.8)

E3909.2 Loading and protection. The ampere load of flexible cords serving fixed appliances shall be in accordance with Table E3909.2. This table shall be used in conjunction with applicable end use product standards to ensure selection of the proper size and type. Where flexible cord is approved for and used with a specific listed appliance, it shall be considered to be protected where applied within the appliance listing requirements. [240.4, 240.5(A), 240.5(B)(1), 400.5, and 400.13]

TABLE E3909.2 [Table 400.5(A)(1)]
MAXIMUM AMPERE LOAD FOR FLEXIBLE CORDS

CORD SIZE (AWG)	CORD TYPES S, SE, SEO, SJ, SJE, SJEO, SJO, SJOO, SJT, SJTO, SJTOO, SO, SOO, SRD, SRDE, SRDT, ST, STD, SV, SVO, SVOO, SVTO, SVTOO	
	Maximum ampere load	
	Three current-carrying conductors	Two current-carrying conductors
18	7	10
16	10	13
14	15	18
12	20	25

E3909.3 Splices. Flexible cord shall be used only in continuous lengths without splices or taps. (400.9)

E3909.4 Attachment plugs. Where used in accordance with Section E3909.1, each flexible cord shall be equipped with an attachment plug and shall be energized from a receptacle outlet. [400.7(B)]

CHAPTER 40

DEVICES AND LUMINAIRES

SECTION E4001
SWITCHES

E4001.1 Rating and application of snap switches. General-use snap switches shall be used within their ratings and shall control only the following loads:

1. Resistive and inductive loads not exceeding the ampere rating of the switch at the voltage involved.
2. Tungsten-filament lamp loads not exceeding the ampere rating of the switch at 120 volts.
3. Motor loads not exceeding 80 percent of the ampere rating of the switch at its rated voltage. [404.14(A)]

E4001.2 CO/ALR snap switches. Snap switches rated 20 amperes or less directly connected to aluminum conductors shall be marked CO/ALR. [404.14(C)]

E4001.3 Indicating. General-use and motor-circuit switches and circuit breakers shall clearly indicate whether they are in the open OFF or closed ON position. Where single-throw switches or circuit breaker handles are operated vertically rather than rotationally or horizontally, the up position of the handle shall be the closed (on) position.

E4001.4 Time switches and similar devices. Time switches and similar devices shall be of the enclosed type or shall be mounted in cabinets or boxes or equipment enclosures. A barrier shall be used around energized parts to prevent operator exposure when making manual adjustments or switching. (404.5]

E4001.5 Grounding of enclosures. Metal enclosures for switches or circuit breakers shall be connected to an equipment grounding conductor. Metal enclosures for switches or circuit breakers used as service equipment shall comply with the provisions of Section E3609.4. Where nonmetallic enclosures are used with metal raceways or metal-armored cables, provisions shall be made for connecting the equipment grounding conductor.

Nonmetallic boxes for switches shall be installed with a wiring method that provides or includes an equipment grounding conductor. (404.12)

E4001.6 Access. Switches and circuit breakers used as switches shall be located to allow operation from a readily accessible location. Such devices shall be installed so that the center of the grip of the operating handle of the switch or circuit breaker, when in its highest position, will not be more than 6 feet 7 inches (2007 mm) above the floor or working platform. [404.8(A)]

Exception: This section shall not apply to switches and circuit breakers that are accessible by portable means and are installed adjacent to the motors, appliances and other equipment that they supply. [404.8(A) Exception]

E4001.7 Damp or wet locations. A surface mounted switch or circuit breaker located in a damp or wet location or outside of a building shall be enclosed in a weatherproof enclosure or cabinet. A flush-mounted switch or circuit breaker in a damp or wet location shall be equipped with a weatherproof cover. Switches shall not be installed within wet locations in tub or shower spaces unless installed as part of a listed tub or shower assembly. [404.8(A), (B), and (C)]

E4001.8 Grounded conductors. Switches or circuit breakers shall not disconnect the grounded conductor of a circuit except where the switch or circuit breaker simultaneously disconnects all conductors of the circuit. [404.2(B)]

E4001.9 Switch connections. Three- and four-way switches shall be wired so that all switching occurs only in the ungrounded circuit conductor. Color coding of switch connection conductors shall comply with Section E3407.3. Where in metal raceways or metal-jacketed cables, wiring between switches and outlets shall be in accordance with Section E3406.7. [404.2(A)]

Exception: Switch loops do not require a grounded conductor. [404.2(A) Exception]

E4001.10 Box mounted. Flush-type snap switches mounted in boxes that are recessed from the finished wall surfaces as covered in Section E3906.5 shall be installed so that the extension plaster ears are seated against the surface of the wall. Flush-type snap switches mounted in boxes that are flush with the finished wall surface or project therefrom shall be installed so that the mounting yoke or strap of the switch is seated against the box. Screws used for the purpose of attaching a snap switch to a box shall be of the type provided with a listed snap switch, or shall be machine screws having 32 threads per inch or part of listed assemblies or systems, in accordance with the manufacturer's instructions. [404.10(B)]

E4001.11 Snap switch faceplates. Faceplates provided for snap switches mounted in boxes and other enclosures shall be installed so as to completely cover the opening and, where the switch is flush mounted, seat against the finished surface. [404.9(A)]

E4001.11.1 Faceplate grounding. Snap switches, including dimmer and similar control switches, shall be connected to an equipment grounding conductor and shall provide a means to connect metal faceplates to the equipment grounding conductor, whether or not a metal faceplate is installed. Snap switches shall be considered to be part of an effective ground-fault current path if either of the following conditions is met:

1. The switch is mounted with metal screws to a metal box or metal cover that is connected to an equipment grounding conductor or to a nonmetallic box with integral means for connecting to an equipment grounding conductor.

2. An equipment grounding conductor or equipment bonding jumper is connected to an equipment grounding termination of the snap switch. [404.9(B)]

Exceptions:

1. Where a means to connect to an equipment grounding conductor does not exist within the snap-switch enclosure or where the wiring method does not include or provide an equipment grounding conductor, a snap switch without a grounding connection to an equipment grounding conductor shall be permitted for replacement purposes only. A snap switch wired under the provisions of this exception and located within 8 feet (2438 mm) vertically or 5 feet (1524 mm) horizontally of ground or exposed grounded metal objects, shall be provided with a faceplate of nonconducting noncombustible material with nonmetallic attachment screws, except where the switch-mounting strap or yoke is nonmetallic or the circuit is protected by a ground-fault circuit interrupter. [404.9(B) Exception No.1]
2. Listed kits or listed assemblies shall not be required to be connected to an equipment grounding conductor if all of the following conditions apply:
   - 2.1. The device is provided with a nonmetallic faceplate that cannot be installed on any other type of device.
   - 2.2. The device does not have mounting means to accept other configurations of faceplates.
   - 2.3. The device is equipped with a nonmetallic yoke.
   - 2.4. All parts of the device that are accessible after installation of the faceplate are manufactured of nonmetallic materials. [404.9(B) Exception No. 2]
3. Connection to an equipment grounding conductor shall not be required for snap switches that have an integral nonmetallic enclosure complying with Section E3905.1.3. [404.9(B) Exception No. 3]

E4001.12 Dimmer switches. General-use dimmer switches shall be used only to control permanently installed incandescent luminaires (lighting fixtures) except where listed for the control of other loads and installed accordingly. [404.14(E)]

E4001.13 Multipole snap switches. A multipole, general-use snap switch shall not be fed from more than a single circuit unless it is listed and marked as a two-circuit or three-circuit switch. [404.8(C)]

E4001.14 Cord-and-plug-connected loads. Where snap switches are used to control cord-and-plug-connected equipment on a general-purpose branch circuit, each snap switch controlling receptacle outlets or cord connectors that are supplied by permanently connected cord pendants shall be rated at not less than the rating of the maximum permitted ampere rating or setting of the overcurrent device protecting the receptacles or cord connectors, as provided in Sections E4002.1.1 and E4002.1.2. [404.14(F)]

E4001.15 Switches controlling lighting loads. The grounded circuit conductor for the controlled lighting circuit shall be provided at the location where switches control lighting loads that are supplied by a grounded general-purpose branch circuit for other than the following:

1. Where conductors enter the box enclosing the switch through a raceway, provided that the raceway is large enough for all contained conductors, including a grounded conductor.
2. Where the box enclosing the switch is accessible for the installation of an additional or replacement cable without removing finish materials.
3. Where snap switches with integral enclosures comply with E3905.1.3.
4. Where the switch does not serve a habitable room or bathroom.
5. Where multiple switch locations control the same lighting load such that the entire floor area of the room or space is visible from the single or combined switch locations.
6. Where lighting in the area is controlled by automatic means.
7. Where the switch controls a receptacle load. [404.2(C)]

SECTION E4002
RECEPTACLES

E4002.1 Rating and type. Receptacles and cord connectors shall be rated at not less than 15 amperes, 125 volts, or 15 amperes, 250 volts, and shall not be a lampholder type. Receptacles shall be rated in accordance with this section. [406.3(B)]

E4002.1.1 Single receptacle. A single receptacle installed on an individual branch circuit shall have an ampere rating not less than that of the branch circuit. [210.21(B)]

E4002.1.2 Two or more receptacles. Where connected to a branch circuit supplying two or more receptacles or outlets, receptacles shall conform to the values listed in Table E4002.1.2. [210.21(B)(3)]

TABLE E4002.1.2 [Table 210.21(B)(3)]
RECEPTACLE RATINGS FOR VARIOUS SIZE MULTI-OUTLET CIRCUITS

CIRCUIT RATING (amperes)	RECEPTACLE RATING (amperes)
15	15
20	15 or 20
30	30
40	40 or 50
50	50

E4002.2 Grounding type. Receptacles installed on 15- and 20-ampere-rated branch circuits shall be of the grounding type. [406.4(A)]

E4002.3 CO/ALR receptacles. Receptacles rated at 20 amperes or less and directly connected to aluminum conductors shall be marked CO/ALR. [406.3(C)]

E4002.4 Faceplates. Metal face plates shall be grounded. [406.6(B)]

E4002.5 Position of receptacle faces. After installation, receptacle faces shall be flush with or project from face plates of insulating material and shall project a minimum of 0.015 inch (0.381 mm) from metal face plates. Faceplates shall be installed so as to completely cover the opening and seat against the mounting surface. Receptacle faceplates mounted inside of a box having a recess-mounted receptacle shall effectively close the opening and seat against the mounting surface. [406.5(D), 406.6]

Exception: Listed kits or assemblies encompassing receptacles and nonmetallic faceplates that cover the receptacle face, where the plate cannot be installed on any other receptacle, shall be permitted. [406.5(D) Exception]

E4002.6 Receptacle mounted in boxes. Receptacles mounted in boxes that are set back from the finished wall surface as permitted by Section E3906.5 shall be installed so that the mounting yoke or strap of the receptacle is held rigidly at the finished surface of the wall. Screws used for the purpose of attaching receptacles to a box shall be of the type provided with a listed receptacle, or shall be machine screws having 32 threads per inch or part of listed assemblies or systems, in accordance with the manufacturer's instructions. Receptacles mounted in boxes that are flush with the wall surface or project therefrom shall be so installed that the mounting yoke or strap is seated against the box or raised cover. [406.5(A) and (B)]

E4002.7 Receptacles mounted on covers. Receptacles mounted to and supported by a cover shall be held rigidly against the cover by more than one screw or shall be a device assembly or box cover listed and identified for securing by a single screw. [406.5(C)]

E4002.8 Damp locations. A receptacle installed outdoors in a location protected from the weather or in other damp locations shall have an enclosure for the receptacle that is weatherproof when the receptacle cover(s) is closed and an attachment plug cap is not inserted. An installation suitable for wet locations shall also be considered suitable for damp locations. A receptacle shall be considered to be in a location protected from the weather where located under roofed open porches, canopies and similar structures and not subject to rain or water runoff. Fifteen- and 20-ampere, 125- and 250-volt nonlocking receptacles installed in damp locations shall be listed a weather-resistant type. [406.9(A)]

E4002.9 Fifteen- and 20-ampere receptacles in wet locations. Where installed in a wet location, 15- and 20-ampere, 125- and 250-volt receptacles shall have an enclosure that is weatherproof whether or not the attachment plug cap is inserted. An outlet box hood installed for this purpose shall be listed and identified as "extra-duty." Fifteen- and 20-ampere, 125- and 250-volt nonlocking receptacles installed in wet locations shall be a listed weather-resistant type. [406.9(B)(1)]

E4002.10 Other receptacles in wet locations. Where a receptacle other than a 15- or 20-amp, 125- or 250-volt receptacle is installed in a wet location and where the product intended to be plugged into it is not attended while in use, the receptacle shall have an enclosure that is weatherproof both when the attachment plug cap is inserted and when it is removed. Where such receptacle is installed in a wet location and where the product intended to be plugged into it will be attended while in use, the receptacle shall have an enclosure that is weatherproof when the attachment plug cap is removed. [406.9(B)(2)]

E4002.11 Bathtub and shower space. A receptacle shall not be installed within or directly over a bathtub or shower stall. [406.9(C)]

E4002.12 Flush mounting with faceplate. In damp or wet locations, the enclosure for a receptacle installed in an outlet box flush-mounted in a finished surface shall be made weatherproof by means of a weatherproof faceplate assembly that provides a water-tight connection between the plate and the finished surface. [406.9(E)]

E4002.13 Exposed terminals. Receptacles shall be enclosed so that live wiring terminals are not exposed to contact. [406.5(G)]

E4002.14 Tamper-resistant receptacles. In areas specified in Section E3901.1, 125-volt, 15- and 20-ampere receptacles shall be listed tamper-resistant receptacles. [406.12(A)]

Exception: Receptacles in the following locations shall not be required to be tamper resistant:

1. Receptacles located more than 5.5 feet (1676 mm) above the floor.
2. Receptacles that are part of a luminaire or appliance.
3. A single receptacle for a single appliance or a duplex receptacle for two appliances where such receptacles are located in spaces dedicated for the appliances served and, under conditions of normal use, the appliances are not easily moved from one place to another. The appliances shall be cord-and-plug-connected to such receptacles in accordance with Section E3909.4. [406.12(A) Exception]

E4002.15 Dimmer-controlled receptacles. A receptacle supplying lighting loads shall not be connected to a dimmer except where the plug and receptacle combination is a nonstandard configuration type that is specifically listed and identified for each such unique combination.

SECTION E4003
LUMINAIRES

E4003.1 Energized parts. Luminaires, lampholders, and lamps shall not have energized parts normally exposed to contact. (410.5)

E4003.2 Luminaires near combustible material. Luminaires shall be installed or equipped with shades or guards so that combustible material will not be subjected to temperatures in excess of 90°C (194°F). (410.11)

E4003.3 Exposed conductive parts. The exposed metal parts of luminaires shall be connected to an equipment grounding conductor or shall be insulated from the equipment grounding conductor and other conducting surfaces. Lamp tie wires, mounting screws, clips and decorative bands on glass spaced at least $1^1/_2$ inches (38 mm) from lamp terminals shall not be required to be grounded. (410.42)

E4003.4 Screw-shell type. Lampholders of the screw-shell type shall be installed for use as lampholders only. (410.90)

E4003.5 Recessed incandescent luminaires. Recessed incandescent luminaires shall have thermal protection and shall be listed as thermally protected. [410.115(C)]

Exceptions:

1. Thermal protection shall not be required in recessed luminaires listed for the purpose and installed in poured concrete. [410.115(C) Exception No.1]
2. Thermal protection shall not be required in recessed luminaires having design, construction, and thermal performance characteristics equivalent to that of thermally protected luminaires, and such luminaires are identified as inherently protected. [410.115(C) Exception No. 2]

E4003.6 Thermal protection. The ballast of a fluorescent luminaire installed indoors shall have integral thermal protection. Replacement ballasts shall also have thermal protection integral with the ballast. A simple reactance ballast in a fluorescent luminaire with straight tubular lamps shall not be required to be thermally protected. [410.130(E)(1)]

E4003.7 High-intensity discharge luminaires. Recessed high-intensity luminaires designed to be installed in wall or ceiling cavities shall have thermal protection and be identified as thermally protected. Thermal protection shall not be required in recessed high-intensity luminaires having design, construction and thermal performance characteristics equivalent to that of thermally protected luminaires, and such luminaires are identified as inherently protected. Thermal protection shall not be required in recessed high-intensity discharge luminaires installed in and identified for use in poured concrete. A recessed remote ballast for a high-intensity discharge luminaire shall have thermal protection that is integral with the ballast and shall be identified as thermally protected. [110.130(F)(1), (2), (3), and (4)]

E4003.8 Metal halide lamp containment. Luminaires that use a metal halide lamp other than a thick-glass parabolic reflector lamp (PAR) shall be provided with a containment barrier that encloses the lamp, or shall be provided with a physical means that allows the use of only a lamp that is Type O. [(110.130(F)(5)]

E4003.9 Wet or damp locations. Luminaires installed in wet or damp locations shall be installed so that water cannot enter or accumulate in wiring compartments, lampholders or other electrical parts. All luminaires installed in wet locations shall be marked SUITABLE FOR WET LOCATIONS. All luminaires installed in damp locations shall be marked SUITABLE FOR WET LOCATIONS or SUITABLE FOR DAMP LOCATIONS. (410.10)

E4003.10 Lampholders in wet or damp locations. Lampholders installed in wet locations shall be listed for use in wet locations. Lampholders installed in damp locations shall be listed for damp locations or shall be listed for wet locations. (410.96)

E4003.11 Bathtub and shower areas. Cord-connected luminaires, chain-, cable-, or cord-suspended-luminaires, lighting track, pendants, and ceiling-suspended (paddle) fans shall not have any parts located within a zone measured 3 feet (914 mm) horizontally and 8 feet (2438 mm) vertically from the top of a bathtub rim or shower stall threshold. This zone is all encompassing and includes the space directly over the tub or shower. Luminaires within the actual outside dimension of the bathtub or shower to a height of 8 feet (2438 mm) vertically from the top of the bathtub rim or shower threshold shall be marked for damp locations and where subject to shower spray, shall be marked for wet locations. [410.4(D)]

E4003.12 Luminaires in clothes closets. For the purposes of this section, storage space shall be defined as a volume bounded by the sides and back closet walls and planes extending from the closet floor vertically to a height of 6 feet (1829 mm) or the highest clothes-hanging rod and parallel to the walls at a horizontal distance of 24 inches (610 mm) from the sides and back of the closet walls respectively, and continuing vertically to the closet ceiling parallel to the walls at a horizontal distance of 12 inches (305 mm) or the width of the shelf, whichever is greater. For a closet that permits access to both sides of a hanging rod, the storage space shall include the volume below the highest rod extending 12 inches (305 mm) on either side of the rod on a plane horizontal to the floor extending the entire length of the rod (see Figure E4003.12). (410.2)

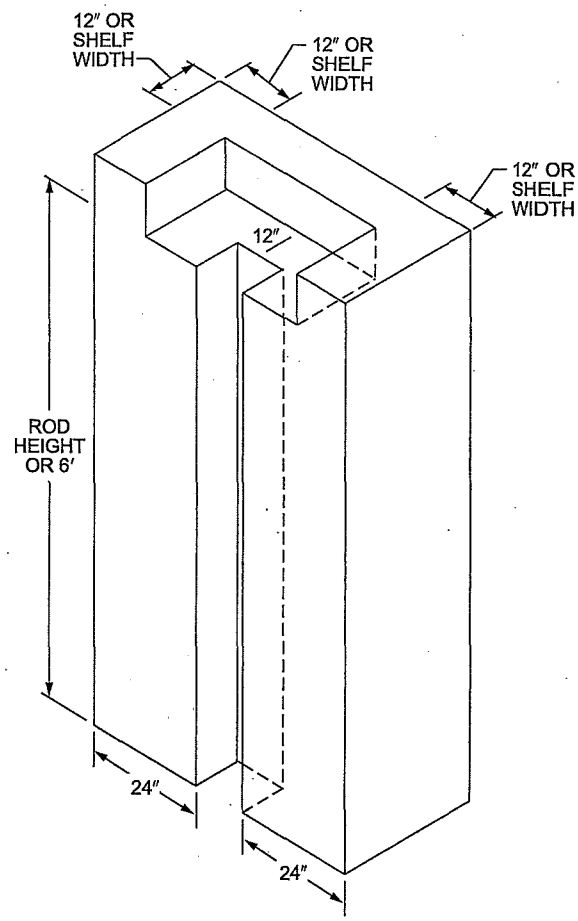

For SI: 1 inch = 25.4 mm, 1 foot = 304.8 mm.

FIGURE E4003.12
CLOSET STORAGE SPACE

The types of luminaires installed in clothes closets shall be limited to surface-mounted or recessed incandescent or LED luminaires with completely enclosed light sources, surface-mounted or recessed fluorescent luminaires, and surface-mounted fluorescent or LED luminaires identified as suitable for installation within the closet storage area. Incandescent luminaires with open or partially enclosed lamps and pendant luminaires or lamp-holders shall be prohibited. The minimum clearance between luminaires installed in clothes closets and the nearest point of a closet storage area shall be as follows: [410.16(A) and (B)]

1. Surface-mounted incandescent or LED luminaires with a completely enclosed light source shall be installed on the wall above the door or on the ceiling, provided that there is a minimum clearance of 12 inches (305 mm) between the fixture and the nearest point of a storage space.
2. Surface-mounted fluorescent luminaires shall be installed on the wall above the door or on the ceiling, provided that there is a minimum clearance of 6 inches (152 mm).
3. Recessed incandescent luminaires or LED luminaires with a completely enclosed light source shall be installed in the wall or the ceiling provided that there is a minimum clearance of 6 inches (152 mm).
4. Recessed fluorescent luminaires shall be installed in the wall or on the ceiling provided that there is a minimum clearance of 6 inches (152 mm) between the fixture and the nearest point of a storage space.
5. Surface-mounted fluorescent or LED luminaires shall be permitted to be installed within the closet storage space where identified for this use. [410.16(C)]

E4003.13 Luminaire wiring—general. Wiring on or within luminaires shall be neatly arranged and shall not be exposed to physical damage. Excess wiring shall be avoided. Conductors shall be arranged so that they are not subjected to temperatures above those for which the conductors are rated. (410.48)

E4003.13.1 Polarization of luminaires. Luminaires shall be wired so that the screw shells of lampholders will be connected to the same luminaire or circuit conductor or terminal. The grounded conductor shall be connected to the screw shell.

E4003.13.2 Luminaires as raceways. Luminaires shall not be used as raceways for circuit conductors except where such luminaires are listed and marked for use as a raceway or are identified for through-wiring. Luminaires designed for end-to-end connection to form a continuous assembly, and luminaires connected together by recognized wiring methods, shall not be required to be listed as a raceway where they contain the conductors of one 2-wire branch circuit or one multiwire branch circuit and such conductors supply the connected luminaires. One additional 2-wire branch circuit that separately supplies one or more of the connected luminaires shall also be permitted. [410.64(A), (B), and (C)]

SECTION E4004
LUMINAIRE INSTALLATION

E4004.1 Outlet box covers. In a completed installation, each outlet box shall be provided with a cover except where covered by means of a luminaire canopy, lampholder or device with a faceplate. (410.22)

E4004.2 Combustible material at outlet boxes. Combustible wall or ceiling finish exposed between the inside edge of a luminaire canopy or pan and the outlet box and having a surface area of 180 in.^{2} (116 129 mm^2) or more shall be covered with a noncombustible material.

E4004.3 Access. Luminaires shall be installed so that the connections between the luminaire conductors and the circuit conductors can be accessed without requiring the disconnection of any part of the wiring. Luminaires that are connected by attachment plugs and receptacles meet the requirement of this section. (410.8)

E4004.4 Supports. Luminaires and lampholders shall be securely supported. A luminaire that weighs more than 6 pounds (2.72 kg) or exceeds 16 inches (406 mm) in any dimension shall not be supported by the screw shell of a lampholder. [410.30(A)]

E4004.5 Means of support. Outlet boxes or fittings installed as required by Sections E3905 and E3906 shall be permitted to support luminaires. [410.36(A)]

E4004.6 Exposed components. Luminaires having exposed ballasts, transformers, LED drivers or power supplies shall be installed so that such ballasts, transformers, LED drivers or power supplies are not in contact with combustible material unless listed for such condition. [410.136(A)]

E4004.7 Combustible low-density cellulose fiberboard. Where a surface-mounted luminaire containing a ballast, transformer, LED driver or power supply is installed on combustible low-density cellulose fiberboard, the luminaire shall be marked for this purpose or it shall be spaced not less than $1^1/_2$ inches (38 mm) from the surface of the fiberboard. Where such luminaires are partially or wholly recessed, the provisions of Sections E4004.8 and E4004.9 shall apply. [410.136(B)]

E4004.8 Recessed luminaire clearance. A recessed luminaire that is not identified for contact with insulation shall have all recessed parts spaced at least $^1/_2$ inch (12.7 mm) from combustible materials. The points of support and the finish trim parts at the opening in the ceiling, wall or other finished surface shall be permitted to be in contact with combustible materials. A recessed luminaire that is identified for contact with insulation, Type IC, shall be permitted to be in contact with combustible materials at recessed parts, points of support, and portions passing through the building structure and at finish trim parts at the opening in the ceiling or wall. [410.116(A)(1) and (A)(2)]

E4004.9 Recessed luminaire installation. Thermal insulation shall not be installed above a recessed luminaire or within 3 inches (76 mm) of the recessed luminaire's enclosure, wiring compartment, ballast, transformer, LED driver or power supply except where such luminaire is identified for contact with insulation, Type IC. [410.116(B)]

SECTION E4005
TRACK LIGHTING

E4005.1 Installation. Lighting track shall be permanently installed and permanently connected to a branch circuit having a rating not more than that of the track. [410.151(A) and (B)]

E4005.2 Fittings. Fittings identified for use on lighting track shall be designed specifically for the track on which they are to be installed. Fittings shall be securely fastened to the track, shall maintain polarization and connection to the equipment grounding conductor, and shall be designed to be suspended directly from the track. Only lighting track fittings shall be installed on lighting track. Lighting track fittings shall not be equipped with general-purpose receptacles. [410.151(A) and (B)]

E4005.3 Connected load. The connected load on lighting track shall not exceed the rating of the track. [410.151(B)]

E4005.4 Prohibited locations. Lighting track shall not be installed in the following locations:

1. Where likely to be subjected to physical damage.
2. In wet or damp locations.
3. Where subject to corrosive vapors.
4. In storage battery rooms.
5. In hazardous (classified) locations.
6. Where concealed.
7. Where extended through walls or partitions.
8. Less than 5 feet (1524 mm) above the finished floor except where protected from physical damage or the track operates at less than 30 volts rms open-circuit voltage.
9. Where prohibited by Section E4003.11. [410.151(C)]

E4005.5 Fastening. Lighting track shall be securely mounted so that each fastening will be suitable for supporting the maximum weight of luminaires that can be installed. Except where identified for supports at greater intervals, a single section 4 feet (1219 mm) or shorter in length shall have two supports and, where installed in a continuous row, each individual section of not more than 4 feet (1219 mm) in length shall have one additional support. (410.154)

E4005.6 Grounding. Lighting track shall be grounded in accordance with Chapter 39, and the track sections shall be securely coupled to maintain continuity of the circuitry, polarization and grounding throughout. [410.155(B)]

CHAPTER 41

APPLIANCE INSTALLATION

SECTION E4101
GENERAL

E4101.1 Scope. This section covers installation requirements for appliances and fixed heating equipment. (422.1 and 424.1)

E4101.2 Installation. Appliances and equipment shall be installed in accordance with the manufacturer's installation instructions. Electrically heated appliances and equipment shall be installed with the required clearances to combustible materials. [110.3(B) and 422.17]

E4101.3 Flexible cords. Cord-and-plug-connected appliances shall use cords suitable for the environment and physical conditions likely to be encountered. Flexible cords shall be used only where the appliance is listed to be connected with a flexible cord. The cord shall be identified as suitable in the installation instructions of the appliance manufacturer. Receptacles for cord-and-plug-connected appliances shall be accessible and shall be located to avoid physical damage to the flexible cord. Except for a listed appliance marked to indicate that it is protected by a system of double-insulation, the flexible cord supplying an appliance shall terminate in a grounding-type attachment plug. A receptacle for a cord-and-plug-connected range hood shall be supplied by an individual branch circuit. Specific appliances have additional requirements as specified in Table E4101.3 (see Section E3909). [422.16(B)(1), (B)(2)]

TABLE E4101.3
FLEXIBLE CORD LENGTH

APPLIANCE	MINIMUM CORD LENGTH (inches)	MAXIMUM CORD LENGTH (inches)
Electrically operated in-sink waste disposal	18	36
Built-in dishwasher	36	48
Trash compactor	36	48
Range hoods	18	36

For SI: 1 inch = 25.4 mm.

E4101.4 Overcurrent protection. Each appliance shall be protected against overcurrent in accordance with the rating of the appliance and its listing. [110.3(B), 422.11(A)]

E4101.4.1 Single nonmotor-operated appliance. The overcurrent protection for a branch circuit that supplies a single nonmotor-operated appliance shall not exceed that marked on the appliance. Where the overcurrent protection rating is not marked and the appliance is rated at over 13.3 amperes, the overcurrent protection shall not exceed 150 percent of the appliance rated current. Where 150 percent of the appliance rating does not correspond to a standard overcurrent device ampere rating, the next higher standard rating shall be permitted. Where the overcurrent protection rating is not marked and the appliance is rated at 13.3 amperes or less, the overcurrent protection shall not exceed 20 amperes. [422.11(E)]

E4101.5 Disconnecting means. Each appliance shall be provided with a means to disconnect all ungrounded supply conductors. For fixed electric space-heating equipment, means shall be provided to disconnect the heater and any motor controller(s) and supplementary overcurrent-protective devices. Switches and circuit breakers used as a disconnecting means shall be of the indicating type. Disconnecting means shall be as set forth in Table E4101.5. (422.30, 422.35, and 424.19)

E4101.6 Support of ceiling-suspended paddle fans. Ceiling-suspended fans (paddle) shall be supported independently of an outlet box or by a listed outlet box or outlet box system identified for the use and installed in accordance with Section E3905.9. (422.18)

E4101.7 Snow-melting and deicing equipment protection. Outdoor receptacles that are not readily accessible and are supplied from a dedicated branch circuit for electric snow-melting or deicing equipment shall be permitted to be installed without ground-fault circuit-interrupter protection for personnel. However, ground-fault protection of equipment shall be provided for fixed outdoor electric deicing and snow-melting equipment. [210.8(A)(3) Exception, 426.28]

TABLE E4101.5
DISCONNECTING MEANS [422.31(A), (B), and (C); 422.34; 422.35; 424.19; 424.20; and 440.14]

DESCRIPTION	ALLOWED DISCONNECTING MEANS
Permanently connected appliance rated at not over 300 volt-amperes or $^1/_8$ horsepower.	Branch-circuit overcurrent device.
Permanently connected appliances rated in excess of 300 volt-amperes.	Branch circuit breaker or switch located within sight of appliance or such devices in any location that are capable of being locked in the open position. The provision for locking or adding a lock to the disconnecting means shall be installed on or at the switch or circuit breaker used as the disconnecting means and shall remain in place with or without the lock installed.
Motor-operated appliances rated over $^1/_8$ horsepower.	For permanently connected motor-operated appliances with motors rated over $^1/_8$ horsepower, the branch circuit switch or circuit breaker shall be permitted to serve as the disconnecting means where the switch or circuit breaker is within sight from the appliance. Where the branch circuit switch is not located within sight from the appliance, the disconnecting means shall be one of the following types: a listed motor-circuit switch rated in horsepower, a listed molded case circuit breaker, a listed molded case switch, a listed manual motor controller additionally marked "Suitable as Motor Disconnect" where installed between the final motor branch-circuit short-circuit protective device and the motor. For stationary motors rated at 2 hp or less and 300 volts or less, the disconnecting means shall be permitted to be one of the following devices: 1. A general-use switch having an ampere rating not less than twice the full-load current rating of the motor. 2. On AC circuits, a general-use snap switch suitable only for use on AC, not general-use AC–DC snap switches, where the motor full-load current rating is not more than 80 percent of the ampere rating of the switch. 3. A listed manual motor controller having a horsepower rating not less than the rating of the motor and marked "Suitable as Motor Disconnect". The disconnecting means for motor circuits rated 600 volts, nominal, or less shall have an ampere rating not less than 115 percent of the full-load current rating of the motor except that a listed unfused motor-circuit switch having a horsepower rating not less than the motor horsepower shall be permitted to have an ampere rating less than 115 percent of the full-load current rating of the motor. The disconnecting means shall be installed within sight of the appliance. **Exception:** A unit switch with a marked-off position that is a part of an appliance and disconnects all ungrounded conductors shall be permitted as the disconnecting means and the switch or circuit breaker serving as the other disconnecting means shall be permitted to be out of sight from the appliance.
Appliances listed for cord-and-plug connection.	A separable connector or attachment plug and receptacle provided with access.

(continued)

TABLE E4101.5—continued
DISCONNECTING MEANS

DESCRIPTION	ALLOWED DISCONNECTING MEANS
Permanently installed heating equipment with motors rated at not over $^1/_8$ horsepower with supplementary overcurrent protection.	Disconnect, on the supply side of fuses, in sight from the supplementary overcurrent device, and in sight of the heating equipment or, in any location, if capable of being locked in the open position.
Heating equipment containing motors rated over $^1/_8$ horsepower with supplementary overcurrent protection.	Disconnect permitted to serve as required disconnect for both the heating equipment and the controller where, on the supply side of fuses, and in sight from the supplementary overcurrent devices, if the disconnecting means is also in sight from the controller, or is capable of being locked off and simultaneously disconnects the heater, motor controller(s) and supplementary overcurrent protective devices from all ungrounded conductors. The provision for locking or adding a lock to the disconnecting means shall be installed on or at the switch or circuit breaker used as the disconnecting means and shall remain in place with or without the lock installed. The disconnecting means shall have an ampere rating not less than 125 percent of the total load of the motors and the heaters.
Heating equipment containing no motor rated over $^1/_8$ horsepower without supplementary overcurrent protection.	Branch-circuit switch or circuit breaker where within sight from the heating equipment or capable of being locked off and simultaneously disconnects the heater, motor controller(s) and supplementary overcurrent protective devices from all ungrounded conductors. The provision for locking or adding a lock to the disconnecting means shall be installed on or at the switch or circuit breaker used as the disconnecting means and shall remain in place with or without the lock installed. The disconnecting means shall have an ampere rating not less than 125 percent of the total load of the motors and the heaters.
Heating equipment containing motors rated over $^1/_8$ horsepower without supplementary overcurrent protection.	Disconnecting means in sight from motor controller or as provided for heating equipment with motor rated over $^1/_8$ horsepower with supplementary overcurrent protection and simultaneously disconnects the heater, motor controller(s) and supplementary overcurrent protective devices from all ungrounded conductors. The provision for locking or adding a lock to the disconnecting means shall be installed on or at the switch or circuit breaker used as the disconnecting means and shall remain in place with or without the lock installed. The disconnecting means shall have an ampere rating not less than 125 percent of the total load of the motors and the heaters.
Air-conditioning condensing units and heat pump units.	A readily accessible disconnect within sight from unit as the only allowable means.[a]
Appliances and fixed heating equipment with unit switches having a marked OFF position.	Unit switch where an additional individual switch or circuit breaker serves as a redundant disconnecting means.
Thermostatically controlled fixed heating equipment.	Thermostats with a marked OFF position that directly open all ungrounded conductors, which when manually placed in the OFF position are designed so that the circuit cannot be energized automatically and that are located within sight of the equipment controlled.

For SI: 1 horsepower = 0.746 kW.

a. The disconnecting means shall be permitted to be installed on or within the unit. It shall not be located on panels designed to allow access to the unit or located so as to obscure the air-conditioning equipment nameplate(s).

CHAPTER 42

SWIMMING POOLS

SECTION E4201
GENERAL

E4201.1 Scope. The provisions of this chapter shall apply to the construction and installation of electric wiring and equipment associated with all swimming pools, wading pools, decorative pools, fountains, hot tubs and spas, and hydromassage bathtubs, whether permanently installed or storable, and shall apply to metallic auxiliary equipment, such as pumps, filters and similar equipment. Sections E4202 through E4206 provide general rules for permanent pools, spas and hot tubs. Section E4207 provides specific rules for storable pools and storable/portable spas and hot tubs. Section E4208 provides specific rules for spas and hot tubs. Section E4209 provides specific rules for hydromassage bathtubs. (680.1)

E4201.2 Definitions. (680.2)

CORD-AND-PLUG-CONNECTED LIGHTING ASSEMBLY. A lighting assembly consisting of a cord-and-plug-connected transformer and a luminaire intended for installation in the wall of a spa, hot tub, or storable pool.

DRY-NICHE LUMINAIRE. A luminaire intended for installation in the floor or wall of a pool, spa or fountain in a niche that is sealed against the entry of water.

FORMING SHELL. A structure designed to support a wet-niche luminaire assembly and intended for mounting in a pool or fountain structure.

FOUNTAIN. Fountains, ornamental pools, display pools, and reflection pools. The definition does not include drinking fountains.

HYDROMASSAGE BATHTUB. A permanently installed bathtub equipped with a recirculating piping system, pump, and associated equipment. It is designed so it can accept, circulate and discharge water upon each use.

LOW VOLTAGE CONTACT LIMIT. A voltage not exceeding the following values:

1. 15 volts (RMS) for sinusoidal AC
2. 21.2 volts peak for nonsinusoidal AC
3. 30 volts for continuous DC
4. 12.4 volts peak for DC that is interrupted at a rate of 10 to 200 Hz

MAXIMUM WATER LEVEL. The highest level that water can reach before it spills out.

NO-NICHE LUMINAIRE. A luminaire intended for installation above or below the water without a niche.

PACKAGED SPA OR HOT TUB EQUIPMENT ASSEMBLY. A factory-fabricated unit consisting of water-circulating, heating and control equipment mounted on a common base, intended to operate a spa or hot tub. Equipment may include pumps, air blowers, heaters, luminaires, controls and sanitizer generators.

PERMANENTLY INSTALLED SWIMMING, WADING, IMMERSION AND THERAPEUTIC POOLS. Those that are constructed in the ground or partially in the ground, and all others capable of holding water with a depth greater than 42 inches (1067 mm), and all pools installed inside of a building, regardless of water depth, whether or not served by electrical circuits of any nature.

POOL. Manufactured or field-constructed equipment designed to contain water on a permanent or semipermanent basis and used for swimming, wading, immersion, or therapeutic purposes.

POOL COVER, ELECTRICALLY OPERATED. Motor-driven equipment designed to cover and uncover the water surface of a pool by means of a flexible sheet or rigid frame.

SELF-CONTAINED SPA OR HOT TUB. A factory-fabricated unit consisting of a spa or hot tub vessel with all water-circulating, heating and control equipment integral to the unit. Equipment may include pumps, air blowers, heaters, luminaires, controls and sanitizer generators.

SPA OR HOT TUB. A hydromassage pool, or tub for recreational or therapeutic use, not located in health care facilities, designed for immersion of users, and usually having a filter, heater, and motor-driven blower. They are installed indoors or outdoors, on the ground or supporting structure, or in the ground or supporting structure. Generally, a spa or hot tub is not designed or intended to have its contents drained or discharged after each use.

STORABLE SWIMMING, WADING OR IMMERSION POOLS; OR STORABLE/PORTABLE SPAS AND HOT TUBS. Those that are constructed on or above the ground and are capable of holding water with a maximum depth of 42 inches (1067 mm), or a pool with nonmetallic, molded polymeric walls or inflatable fabric walls regardless of dimension.

THROUGH-WALL LIGHTING ASSEMBLY. A lighting assembly intended for installation above grade, on or through the wall of a pool, consisting of two interconnected groups of components separated by the pool wall.

WET-NICHE LUMINAIRE. A luminaire intended for installation in a forming shell mounted in a pool or fountain structure where the luminaire will be completely surrounded by water.

SECTION E4202
WIRING METHODS FOR POOLS, SPAS, HOT TUBS AND HYDROMASSAGE BATHTUBS

E4202.1 General. Wiring methods used in conjunction with permanently installed swimming pools, spas, hot tubs or hydromassage bathtubs shall be installed in accordance with Table E4202.1 and Chapter 38 except as otherwise stated in this section. Storable swimming pools shall comply with Section E4207. [680.7; 680.21(A); 680.23(B) and (F); 680.25(A); 680.42; 680.43; and 680.70]

E4202.2 Flexible cords. Flexible cords used in conjunction with a pool, spa, hot tub or hydromassage bathtub shall be installed in accordance with the following:

1. For other than underwater luminaires, fixed or stationary equipment shall be permitted to be connected with a flexible cord to facilitate removal or disconnection for maintenance or repair. For other than storable pools, the flexible cord shall not exceed 3 feet (914 mm) in length. Cords that supply swimming pool equipment shall have a copper equipment grounding conductor not smaller than 12 AWG and shall terminate in a grounding-type attachment plug. [680.7(A), (B), and (C); 680.21(A)(5)]
2. Other than listed low-voltage lighting systems not requiring grounding, wet-niche luminaires that are supplied by a flexible cord or cable shall have all exposed noncurrent-carrying metal parts grounded by an insulated copper equipment grounding conductor that is an integral part of the cord or cable. Such grounding conductor shall be connected to a grounding terminal in the supply junction box, transformer enclosure, or other enclosure and shall be not smaller than the supply conductors and not smaller than 16 AWG. [680.23(B)(3)]
3. A listed packaged spa or hot tub installed outdoors that is GFCI protected shall be permitted to be cord-and-plug-connected provided that such cord does not exceed 15 feet (4572 mm) in length. [680.42(A)(2)]
4. A listed packaged spa or hot tub rated at 20 amperes or less and installed indoors shall be permitted to be cord-and-plug-connected to facilitate maintenance and repair. (680.43 Exception No. 1)
5. For other than underwater and storable pool lighting luminaire, the requirements of Item 1 shall apply to any cord-equipped luminaire that is located within 16 feet (4877 mm) radially from any point on the water surface. [680.22(B)(5)]

TABLE E4202.1
ALLOWABLE APPLICATIONS FOR WIRING METHODS[a, b, c, d, e, f, g, h, k]

WIRING LOCATION OR PURPOSE (Application allowed where marked with an "A")	AC, FMC, NM, SR, SE	EMT	ENT	IMC[i], RMC[i], RNC[h]	LFMC	LFNMC	UF	MC[j]	FLEX CORD
Panelboard(s) that supply pool equipment: from service equipment to panelboard	A[b, e] SR not permitted	A[c]	A[b]	A	—	A	A[e]	A[e]	—
Wet-niche and no-niche luminaires: from branch circuit OCPD to deck or junction box	AC[b] only	A[c]	A[b]	A	—	A	—	A[b]	—
Wet-niche and no-niche luminaires: from deck or junction box to forming shell	—	—	—	A[d]	—	A	—	—	A[g]
Dry niche: from branch circuit OCPD to luminaires	AC[b] only	A[c]	A[b]	A	—	A	—	A[b]	—
Pool-associated motors: from branch circuit OCPD to motor	A[b]	A[c]	A[b]	A	A[e]	A[e]	A[b]	A	A[g]
Packaged or self-contained outdoor spas and hot tubs with underwater luminaire: from branch circuit OCPD to spa or hot tub	AC[b] only	A[e]	A[b]	A	A[f]	A[f]	—	A[b]	A[g]
Packaged or self-contained outdoor spas and hot tubs without underwater luminaire: from branch circuit OCPD to spa or hot tub	A[b]	A[c]	A[b]	A	A[f]	A[f]	A[b]	A	A[g]
Indoor spas and hot tubs, hydromassage bathtubs, and other pool, spa or hot tub associated equipment: from branch circuit OCPD to equipment	A[b]	A[c]	A[b]	A	A	A	A	A	A[g]
Connection at pool lighting transformers or power supplies	AC[b] only	A[c]	A[b]	A	A[l, f]	A[f]	—	A[b]	—

For SI: 1 foot = 304.8 mm.

a. For all wiring methods, see Section E4205 for equipment grounding conductor requirements.
b. Limited to use within buildings.
c. Limited to use on or within buildings.
d. Metal conduit shall be constructed of brass or other approved corrosion-resistant metal.
e. Limited to where necessary to employ flexible connections at or adjacent to a pool motor.
f. Sections installed external to spa or hot tub enclosure limited to individual lengths not to exceed 6 feet. Length not limited inside spa or hot tub enclosure.
g. Flexible cord shall be installed in accordance with Section E4202.2.
h. Nonmetallic conduit shall be rigid polyvinyl chloride conduit Type PVC or reinforced thermosetting resin conduit Type RTRC.
i. Aluminum conduits shall not be permitted in the pool area where subject to corrosion.
j. Where installed as direct burial cable or in wet locations, Type MC cable shall be listed and identified for the location.
k. See Section E4202.3 for listed, double-insulated pool pump motors.
l. Limited to use in individual lengths not to exceed 6 feet. The total length of all individual runs of LFMC shall not exceed 10 feet.

E4202.3 Double insulated pool pumps. A listed cord and plug-connected pool pump incorporating an approved system of double insulation that provides a means for grounding only the internal and nonaccessible, noncurrent-carrying metal parts of the pump shall be connected to any wiring method recognized in Chapter 38 that is suitable for the location. Where the bonding grid is connected to the equipment grounding conductor of the motor circuit in accordance with Section E4204.2, Item 6.1, the branch circuit wiring shall comply with Sections E4202.1 and E4205.5. [680.21(B)]

SECTION E4203
EQUIPMENT LOCATION AND CLEARANCES

E4203.1 Receptacle outlets. Receptacles outlets shall be installed and located in accordance with Sections E4203.1.1 through E4203.1.5. Distances shall be measured as the shortest path that an appliance supply cord connected to the receptacle would follow without penetrating a floor, wall, ceiling, doorway with hinged or sliding door, window opening, or other effective permanent barrier. [680.22(A)(5)]

E4203.1.1 Location. Receptacles that provide power for water-pump motors or other loads directly related to the circulation and sanitation system shall be permitted to be located between 6 feet and 10 feet (1829 mm and 3048 mm) from the inside walls of pools and outdoor spas and hot tubs, where the receptacle is single and of the grounding type and protected by ground-fault circuit interrupters.

Other receptacles on the property shall be located not less than 6 feet (1829 mm) from the inside walls of pools and outdoor spas and hot tubs. [680.22(A)(2) and (A)(3)]

E4203.1.2 Where required. At least one 125-volt, 15- or 20-ampere receptacle supplied by a general-purpose branch circuit shall be located a minimum of 6 feet (1829 mm) from and not more than 20 feet (6096 mm) from the inside wall of pools and outdoor spas and hot tubs. This receptacle shall be located not more than 6 feet, 6 inches (1981 mm) above the floor, platform or grade level serving the pool, spa or hot tub. [680.22(A)(1)]

E4203.1.3 GFCI protection. All 15- and 20-ampere, single phase, 125-volt receptacles located within 20 feet (6096 mm) of the inside walls of pools and outdoor spas and hot tubs shall be protected by a ground-fault circuit-interrupter. Outlets supplying pool pump motors supplied from branch circuits rated at 120 volts through 240 volts, single phase, whether by receptacle or direct connection, shall be provided with ground-fault circuit-interrupter protection for personnel. [680.21(C) and 680.22(A)(4)]

E4203.1.4 Indoor locations. Receptacles shall be located not less than 6 feet (1829 mm) from the inside walls of indoor spas and hot tubs. A minimum of one 125-volt receptacle shall be located between 6 feet (1829 mm) and 10 feet (3048 mm) from the inside walls of indoor spas or hot tubs. [680.43(A) and 680.43(A)(1)]

E4203.1.5 Indoor GFCI protection. All 125-volt receptacles rated 30 amperes or less and located within 10 feet (3048 mm) of the inside walls of spas and hot tubs installed indoors, shall be protected by ground-fault circuit-interrupters. [680.43(A)(2)]

E4203.2 Switching devices. Switching devices shall be located not less than 5 feet (1524 mm) horizontally from the inside walls of pools, spas and hot tubs except where separated from the pool, spa or hot tub by a solid fence, wall, or other permanent barrier or the switches are listed for use within 5 feet (1524 mm). Switching devices located in a room or area containing a hydromassage bathtub shall be located in accordance with the general requirements of this code. [680.22(C); 680.43(C); and 680.72]

E4203.3 Disconnecting means. One or more means to simultaneously disconnect all ungrounded conductors for all utilization equipment, other than lighting, shall be provided. Each of such means shall be readily accessible and within sight from the equipment it serves and shall be located at least 5 feet (1524 mm) horizontally from the inside walls of a pool, spa, or hot tub unless separated from the open water by a permanently installed barrier that provides a 5-foot (1524 mm) or greater reach path. This horizontal distance shall be measured from the water's edge along the shortest path required to reach the disconnect. (680.12)

E4203.4 Luminaires and ceiling fans. Lighting outlets, luminaires, and ceiling-suspended paddle fans shall be installed and located in accordance with Sections E4203.4.1 through E4203.4.6. [680.22(B)]

E4203.4.1 Outdoor location. In outdoor pool, outdoor spas and outdoor hot tubs areas, luminaires, lighting outlets, and ceiling-suspended paddle fans shall not be installed over the pool or over the area extending 5 feet (1524 mm) horizontally from the inside walls of a pool except where no part of the luminaire or ceiling-suspended paddle fan is less than 12 feet (3658 mm) above the maximum water level. [680.22(B)(1)]

E4203.4.2 Indoor locations. In indoor pool areas, the limitations of Section E4203.4.1 shall apply except where the luminaires, lighting outlets and ceiling-suspended paddle fans comply with all of the following conditions:

1. The luminaires are of a totally enclosed type;
2. Ceiling-suspended paddle fans are identified for use beneath ceiling structures such as porches and patios.
3. A ground-fault circuit interrupter is installed in the branch circuit supplying the luminaires or ceiling-suspended paddle fans; and
4. The distance from the bottom of the luminaire or ceiling-suspended paddle fan to the maximum water level is not less than 7 feet, 6 inches (2286 mm). [680.22(B)(2)]

E4203.4.3 Low-voltage luminaires. Listed low-voltage luminaires not requiring grounding, not exceeding the low-voltage contact limit, and supplied by listed transformers or power supplies that comply with Section E4206.1 shall be permitted to be located less than 1.5 m (5 ft) from the inside walls of the pool. [680.22(B)(6)]

E4203.4.4 Existing lighting outlets and luminaires. Existing lighting outlets and luminaires that are located within 5 feet (1524 mm) horizontally from the inside walls of pools and outdoor spas and hot tubs shall be permitted to be located not less than 5 feet (1524 mm) vertically above the maximum water level, provided that such luminaires and outlets are rigidly attached to the existing structure and are protected by a ground-fault circuit-interrupter. [680.22(B)(3)]

E4203.4.5 Indoor spas and hot tubs.

1. Luminaires, lighting outlets, and ceiling-suspended paddle fans located over the spa or hot tub or within 5 feet (1524 mm) from the inside walls of the spa or hot tub shall be not less than 7 feet, 6 inches (2286 mm) above the maximum water level and shall be protected by a ground-fault circuit interrupter. [680.43(B)(1)(b)]

   Luminaires, lighting outlets, and ceiling-suspended paddle fans that are located 12 feet (3658 mm) or more above the maximum water level shall not require ground-fault circuit interrupter protection. [680.43(B)(1)(a)]

2. Luminaires protected by a ground-fault circuit interrupter and complying with Item 2.1 or 2.2 shall be permitted to be installed less than 7 feet, 6 inches (2286 mm) over a spa or hot tub.

   2.1. Recessed luminaires shall have a glass or plastic lens and nonmetallic or electrically isolated metal trim, and shall be suitable for use in damp locations.

   2.2. Surface-mounted luminaires shall have a glass or plastic globe and a nonmetallic body or a metallic body isolated from contact. Such luminaires shall be suitable for use in damp locations. [680.43(B)(1)(c)]

E4203.4.6 GFCI protection in adjacent areas. Luminaires and outlets that are installed in the area extending between 5 feet (1524 mm) and 10 feet (3048 mm) from the inside walls of pools and outdoor spas and hot tubs shall be protected by ground-fault circuit-interrupters except where such fixtures and outlets are installed not less than 5 feet (1524 mm) above the maximum water level and are rigidly attached to the structure. [680.22(B)(4)]

E4203.5 Other outlets. Other outlets such as for remote control, signaling, fire alarm and communications shall be not less than 10 feet (3048 mm) from the inside walls of the pool. Measurements shall be determined in accordance with Section E4203.1. [680.22(D)]

E4203.6 Overhead conductor clearances. Except where installed with the clearances specified in Table E4203.5, the following parts of pools and outdoor spas and hot tubs shall not be placed under existing service-drop conductors, overhead service conductor, or any other open overhead wiring; nor shall such wiring be installed above the following:

1. Pools and the areas extending not less than 10 feet, (3048 mm) horizontally from the inside of the walls of the pool~~;~~.
2. Diving structures and the areas extending not less than 10 feet (3048 mm) horizontally from the outer edge of such structures.
3. Observation stands, towers, and platforms and the areas extending not less than 10 feet (3048 mm) horizontally from the outer edge of such structures.

Overhead conductors of network-powered broadband communications systems shall comply with the provisions in Table E4203.5 for conductors operating at 0 to 750 volts to ground.

Utility-owned, -operated and -maintained communications conductors, community antenna system coaxial cables and the supporting messengers shall be permitted at a height of not less than 10 feet (3048 mm) above swimming and wading pools, diving structures, and observation stands, towers, and platforms. [680.8(A), (B), and (C)]

E4203.7 Underground wiring. Underground wiring shall not be installed under or within the area extending 5 feet (1524 mm) horizontally from the inside walls of pools and outdoor hot tubs and spas except where the wiring is installed to supply pool, spa or hot tub equipment or where space limitations prevent wiring from being routed 5 feet (1524 mm) or more horizontally from the inside walls. Where installed within 5 feet (1524 mm) of the inside walls, the wiring method shall be a complete raceway system of rigid metal conduit, intermediate metal conduit or a nonmetallic raceway system. Metal conduit shall be corrosion resistant and suitable for the location. The minimum cover depth shall be in accordance with Table E4203.7. (680.10)

TABLE E4203.5 [Table 680.8(A)]
OVERHEAD CONDUCTOR CLEARANCES

	INSULATED SUPPLY OR SERVICE DROP CABLES, 0-750 VOLTS TO GROUND, SUPPORTED ON AND CABLED TOGETHER WITH AN EFFECTIVELY GROUNDED BARE MESSENGER OR EFFECTIVELY GROUNDED NEUTRAL CONDUCTOR (feet)	ALL OTHER SUPPLY OR SERVICE DROP CONDUCTORS (feet)	
		Voltage to ground	
		0-15 kV	Greater than 15 to 50 kV
A. Clearance in any direction to the water level, edge of water surface, base of diving platform, or permanently anchored raft	22.5	25	27
B. Clearance in any direction to the diving platform	14.5	17	18

For SI: 1 foot = 304.8 mm.

3202

TABLE E4203.7 (680.10)
MINIMUM BURIAL DEPTHS

WIRING METHOD	UNDERGROUND WIRING (inches)
Rigid metal conduit	6
Intermediate metal conduit	6
Nonmetallic raceways listed for direct burial and under concrete exterior slab not less than 4 inches in thickness and extending not less than 6 inches (162 mm) beyond the underground installation	6
Nonmetallic raceways listed for direct burial without concrete encasement	18
Other approved raceways[a]	18

For SI: 1 inch = 25.4 mm.
a. Raceways approved for burial only where concrete-encased shall require a concrete envelope not less than 2 inches in thickness.

SECTION E4204
BONDING

E4204.1 Performance. The equipotential bonding required by this section shall be installed to reduce voltage gradients in the prescribed areas of permanently installed swimming pools and spas and hot tubs other than the storable/portable type.

E4204.2 Bonded parts. The parts of pools, spas, and hot tubs specified in Items 1 through 7 shall be bonded together using insulated, covered or bare solid copper conductors not smaller than 8 AWG or using rigid metal conduit of brass or other identified corrosion-resistant metal. An 8 AWG or larger solid copper bonding conductor provided to reduce voltage gradients in the pool, spa, or hot tub area shall not be required to be extended or attached to remote panelboards, service equipment, or electrodes. Connections shall be made by exothermic welding, by listed pressure connectors or clamps that are labeled as being suitable for the purpose and that are made of stainless steel, brass, copper or copper alloy, machine screw-type fasteners that engage not less than two threads or are secured with a nut, thread-forming machine screws that engage not less than two-threads, or terminal bars. Connection devices or fittings that depend solely on solder shall not be used. Sheet metal screws shall not be used to connect bonding conductors or connection devices: [680.26(B)]

1. Conductive pool shells. Bonding to conductive pool shells shall be provided as specified in Item 1.1 or 1.2. Poured concrete, pneumatically applied or sprayed concrete, and concrete block with painted or plastered coatings shall be considered to be conductive materials because of their water permeability and porosity. Vinyl liners and fiberglass composite shells shall be considered to be nonconductive materials.

   1.1. Structural reinforcing steel. Unencapsulated structural reinforcing steel shall be bonded together by steel tie wires or the equivalent. Where structural reinforcing steel is encapsulated in a nonconductive compound, a copper conductor grid shall be installed in accordance with Item 1.2.

   1.2. Copper conductor grid. A copper conductor grid shall be provided and shall comply with Items 1.2.1 through 1.2.4:

      1.2.1. It shall be constructed of minimum 8 AWG bare solid copper conductors bonded to each other at all points of crossing.

      1.2.2. It shall conform to the contour of the pool .

      1.2.3. It shall be arranged in a 12-inch (305 mm) by 12-inch (305 mm) network of conductors in a uniformly spaced perpendicular grid pattern with a tolerance of 4 inches (102 mm).

      1.2.4. It shall be secured within or under the pool not more than 6 inches (152 mm) from the outer contour of the pool shell. [680.26(B)(1)]

2. Perimeter surfaces. The perimeter surface shall extend for 3 feet (914 mm) horizontally beyond the inside walls of the pool and shall include unpaved surfaces, poured concrete surfaces and other types of paving. Perimeter surfaces that extend less than 3 feet (914 mm) beyond the inside wall of the pool and that are separated from the pool by a permanent wall or building 5 feet (1524 mm) or more in height shall require equipotential bonding on the pool side of the permanent wall or building. Bonding to perimeter surfaces shall be provided as specified in Item 2.1 or 2.2 and shall be attached to the pool, spa, or hot tub reinforcing steel or copper conductor grid at a minimum of four points uniformly spaced around the perimeter of the pool, spa, or hot tub. For nonconductive pool shells, bonding at four points shall not be required.

   Exceptions:

   1. Equipotential bonding of perimeter surfaces shall not be required for spas and hot tubs where all of the following conditions apply:

      1.1. The spa or hot tub is listed as a self-contained spa for aboveground use.

      1.2. The spa or hot tub is not identified as suitable only for indoor use.

      1.3. The installation is in accordance with the manufacturer's instructions and is located on or above grade.

      1.4. To top rim of the spa or hot tub is not less than 28 in. (711 mm) above all perimeter surfaces that are within 30 in. (762 mm), measured horizontally from the spa or hot tub. The height of nonconductive external steps for entry

to or exit from the self-contained spa is not used to reduce or increase this rim height measurement.

2. The equipotential bonding requirements for perimeter surfaces shall not apply to a listed self-contained spa or hot tub located indoors and installed above a finished floor.

2.1. Structural reinforcing steel. Structural reinforcing steel shall be bonded in accordance with Item 1.1.

2.2. Alternate means. Where structural reinforcing steel is not available or is encapsulated in a nonconductive compound, a copper conductor(s) shall be used in accordance with Items 2.2.1 through 2.2.5:

2.2.1. At least one minimum 8 AWG bare solid copper conductor shall be provided.

2.2.2. The conductors shall follow the contour of the perimeter surface.

2.2.3. Splices shall be listed.

2.2.4. The required conductor shall be 18 to 24 inches (457 to 610 mm) from the inside walls of the pool.

2.2.5. The required conductor shall be secured within or under the perimeter surface 4 to 6 inches (102 mm to 152 mm) below the subgrade. [680.26(B)(2)]

3. Metallic components. All metallic parts of the pool structure, including reinforcing metal not addressed in Item 1.1, shall be bonded. Where reinforcing steel is encapsulated with a nonconductive compound, the reinforcing steel shall not be required to be bonded. [680.26(B)(3)]

4. Underwater lighting. All metal forming shells and mounting brackets of no-niche luminaires shall be bonded. [680.26(B)(4)]

Exception: Listed low-voltage lighting systems with nonmetallic forming shells shall not require bonding. [680.26(B)(4) Exception]

5. Metal fittings. All metal fittings within or attached to the pool structure shall be bonded. Isolated parts that are not over 4 inches (102 mm) in any dimension and do not penetrate into the pool structure more than 1 inch (25.4 mm) shall not require bonding. [680.26(B)(5)]

6. Electrical equipment. Metal parts of electrical equipment associated with the pool water circulating system, including pump motors and metal parts of equipment associated with pool covers, including electric motors, shall be bonded. [680.26(B)(6)]

Exception: Metal parts of listed equipment incorporating an approved system of double insulation shall not be bonded. [680.26(B)(6) Exception]

6.1. Double-insulated water pump motors. Where a double-insulated water pump motor is installed under the provisions of this item, a solid 8 AWG copper conductor of sufficient length to make a bonding connection to a replacement motor shall be extended from the bonding grid to an accessible point in the vicinity of the pool pump motor. Where there is no connection between the swimming pool bonding grid and the equipment grounding system for the premises, this bonding conductor shall be connected to the equipment grounding conductor of the motor circuit. [680.26(B)(6)(a)]

6.2. Pool water heaters. For pool water heaters rated at more than 50 amperes and having specific instructions regarding bonding and grounding, only those parts designated to be bonded shall be bonded and only those parts designated to be grounded shall be grounded. [680.26(B)(6)(b)]

7. All fixed metal parts including, but not limited to, metal-sheathed cables and raceways, metal piping, metal awnings, metal fences and metal door and window frames. [680.26(B)(7)]

Exceptions:

1. Those separated from the pool by a permanent barrier that prevents contact by a person shall not be required to be bonded. [680.26(B)(7) Exception No. 1]

2. Those greater than 5 feet (1524 mm) horizontally from the inside walls of the pool shall not be required to be bonded. [680.26(B)(7) Exception No. 2]

3. Those greater than 12 feet (3658 mm) measured vertically above the maximum water level of the pool, or as measured vertically above any observation stands, towers, or platforms, or any diving structures, shall not be required to be bonded. [680.26(B)(7) Exception No. 3]

E4204.3 Pool water. Where none of the bonded parts is in direct connection with the pool water, the pool water shall be in direct contact with an approved corrosion-resistant conductive surface that exposes not less than 9 in.^{2} (5800 mm^2) of surface area to the pool water at all times. The conductive surface shall be located where it is not exposed to physical damage or dislodgement during usual pool activities, and it shall be bonded in accordance with Section E4204.2.

E4204.4 Bonding of outdoor hot tubs and spas. Outdoor hot tubs and spas shall comply with the bonding requirements of Sections E4204.1 through E4204.3. Bonding by metal-to-metal mounting on a common frame or base shall be permitted. The metal bands or hoops used to secure wooden staves shall not be required to be bonded as required in Section E4204.2. [680.42 and 680.42(B)]

E4204.5 Bonding of indoor hot tubs and spas. The following parts of indoor hot tubs and spas shall be bonded together:

1. All metal fittings within or attached to the hot tub or spa structure. [680.43(D)(1)]

2. Metal parts of electrical equipment associated with the hot tub or spa water circulating system, including pump

3204

motors unless part of a listed self-contained spa or hot tub. [680.43(D)(2)]

3. Metal raceway and metal piping that are within 5 feet (1524 mm) of the inside walls of the hot tub or spa and that are not separated from the spa or hot tub by a permanent barrier. [680.43(D)(3)]
4. All metal surfaces that are within 5 feet (1524 mm) of the inside walls of the hot tub or spa and that are not separated from the hot tub or spa area by a permanent barrier. [680.43(D)(4)]

   Exception: Small conductive surfaces not likely to become energized, such as air and water jets and drain fittings, where not connected to metallic piping, towel bars, mirror frames, and similar nonelectrical equipment, shall not be required to be bonded. [680.43(D)(4) Exception]
5. Electrical devices and controls that are not associated with the hot tubs or spas and that are located less than 5 feet (1524 mm) from such units. [680.43(D)(5)]

E4204.5.1 Methods. All metal parts associated with the hot tub or spa shall be bonded by any of the following methods:

1. The interconnection of threaded metal piping and fittings. [680.43(E)(1)]
2. Metal-to-metal mounting on a common frame or base. [680.43(E)(2)]
3. The provision of an insulated, covered or bare solid copper bonding jumper not smaller than 8 AWG.It shall not be the intent to require that the 8 AWG or larger solid copper bonding conductor be extended or attached to any remote panelboard, service equipment, or any electrode, but only that it shall be employed to eliminate voltage gradients in the hot tub or spa area as prescribed. [680.43(E)(3)]

E4204.5.2 Connections. Connections to bonded parts shall be made in accordance with Section E3406.13.1.

SECTION E4205
GROUNDING

E4205.1 Equipment to be grounded. The following equipment shall be grounded:

1. Through-wall lighting assemblies and underwater luminaires other than those low-voltage lighting products listed for the application without a grounding conductor.
2. All electrical equipment located within 5 feet (1524 mm) of the inside wall of the pool, spa or hot tub.
3. All electrical equipment associated with the recirculating system of the pool, spa or hot tub.
4. Junction boxes.
5. Transformer and power supply enclosures.
6. Ground-fault circuit-interrupters.
7. Panelboards that are not part of the service equipment and that supply any electrical equipment associated with the pool, spa or hot tub. (680.7)

E4205.2 Luminaires and related equipment. Other than listed low-voltage luminaires not requiring grounding, all through-wall lighting assemblies, wet-niche, dry-niche, or no-niche luminaires shall be connected to an insulated copper equipment grounding conductor sized in accordance with Table E3908.12 but not smaller than 12 AWG. The equipment grounding conductor between the wiring chamber of the secondary winding of a transformer and a junction box shall be sized in accordance with the overcurrent device in such circuit. The junction box, transformer enclosure, or other enclosure in the supply circuit to a wet-niche or no-niche luminaire and the field-wiring chamber of a dry-niche luminaire shall be grounded to the equipment grounding terminal of the panelboard. The equipment grounding terminal shall be directly connected to the panelboard enclosure. The equipment grounding conductor shall be installed without joint or splice. [680.23(F)(2) and 680.23(F)(2) Exception]

Exceptions:

1. Where more than one underwater luminaire is supplied by the same branch circuit, the equipment grounding conductor, installed between the junction boxes, transformer enclosures, or other enclosures in the supply circuit to wet-niche luminaires, or between the field-wiring compartments of dry-niche luminaires, shall be permitted to be terminated on grounding terminals. [680.23(F)(2)(a)]
2. Where an underwater luminaire is supplied from a transformer, ground-fault circuit-interrupter, clock-operated switch, or a manual snap switch that is located between the panelboard and a junction box connected to the conduit that extends directly to the underwater luminaire, the equipment grounding conductor shall be permitted to terminate on grounding terminals on the transformer, ground-fault circuit-interrupter, clock-operated switch enclosure, or an outlet box used to enclose a snap switch. [680.23(F)(2)(b)]

E4205.3 Nonmetallic conduit. Where a nonmetallic conduit is installed between a forming shell and a junction box, transformer enclosure, or other enclosure, a 8 AWG insulated copper bonding jumper shall be installed in this conduit except where a listed low-voltage lighting system not requiring grounding is used. The bonding jumper shall be terminated in the forming shell, junction box or transformer enclosure, or ground-fault circuit-interrupter enclosure. The termination of the 8 AWG bonding jumper in the forming shell shall be covered with, or encapsulated in, a listed potting compound to protect such connection from the possible deteriorating effect of pool water. [680.23(B)(2)(b)]

E4205.4 Flexible cords. Other than listed low-voltage lighting systems not requiring grounding, wet-niche luminaires that are supplied by a flexible cord or cable shall have all exposed noncurrent-carrying metal parts grounded by an insulated copper equipment grounding conductor that is an integral part of the cord or cable. This grounding conductor

shall be connected to a grounding terminal in the supply junction box, transformer enclosure, or other enclosure. The grounding conductor shall not be smaller than the supply conductors and not smaller than 16 AWG. [680.23(B)(3)]

E4205.5 Motors. Pool-associated motors shall be connected to an insulated copper equipment grounding conductor sized in accordance with Table E3908.12, but not smaller than 12 AWG. Where the branch circuit supplying the motor is installed in the interior of a one-family dwelling or in the interior of accessory buildings associated with a one-family dwelling, using a cable wiring method permitted by Table E4202.1, an uninsulated equipment grounding conductor shall be permitted provided that it is enclosed within the outer sheath of the cable assembly. [680.21(A)(1) and (A)(4)]

E4205.6 Feeders. An equipment grounding conductor shall be installed with the feeder conductors between the grounding terminal of the pool equipment panelboard and the grounding terminal of the applicable service equipment. The equipment grounding conductor shall be insulated, shall be sized in accordance with Table E3908.12, and shall be not smaller than 12 AWG.

E4205.6.1 Separate buildings. A feeder to a separate building or structure shall be permitted to supply swimming pool equipment branch circuits, or feeders supplying swimming pool equipment branch circuits, provided that the grounding arrangements in the separate building meet the requirements of Section E3607.3. The feeder equipment grounding conductor shall be an insulated conductor. (680.25(B)(2)]

E4205.7 Cord-connected equipment. Where fixed or stationary equipment is connected with a flexible cord to facilitate removal or disconnection for maintenance, repair, or storage, as provided in Section E4202.2, the equipment grounding conductors shall be connected to a fixed metal part of the assembly. The removable part shall be mounted on or bonded to the fixed metal part. [680.7(C)]

E4205.8 Other equipment. Other electrical equipment shall be grounded in accordance with Section E3908. (Article 250, Parts V, VI, and VII; and 680.6)

SECTION E4206
EQUIPMENT INSTALLATION

E4206.1 Transformers and power supplies. Transformers and power supplies used for the supply of underwater luminaires, together with the transformer or power supply enclosure, shall be listed for swimming pool and spa use. The transformer or power supply shall incorporate either a transformer of the isolated-winding type with an ungrounded secondary that has a grounded metal barrier between the primary and secondary windings, or a transformer that incorporates an approved system of double insulation between the primary and secondary windings. [680.23(A)(2)]

E4206.2 Ground-fault circuit-interrupters. Ground-fault circuit-interrupters shall be self-contained units, circuit-breaker types, receptacle types or other approved types. (680.5)

E4206.3 Wiring on load side of ground-fault circuit-interrupters and transformers. For other than grounding conductors, conductors installed on the load side of a ground-fault circuit-interrupter or transformer used to comply with the provisions of Section E4206.4, shall not occupy raceways, boxes, or enclosures containing other conductors except where the other conductors are protected by ground-fault circuit interrupters or are grounding conductors. Supply conductors to a feed-through type ground-fault circuit interrupter shall be permitted in the same enclosure. Ground-fault circuit interrupters shall be permitted in a panelboard that contains circuits protected by other than ground-fault circuit interrupters. [680.23(F)(3)]

E4206.4 Underwater luminaires. The design of an underwater luminaire supplied from a branch circuit either directly or by way of a transformer or power supply meeting the requirements of Section E4206.1, shall be such that, where the fixture is properly installed without a ground-fault circuit-interrupter, there is no shock hazard with any likely combination of fault conditions during normal use (not relamping). In addition, a ground-fault circuit-interrupter shall be installed in the branch circuit supplying luminaires operating at more than the low-voltage contact limit, such that there is no shock hazard during relamping. The installation of the ground-fault circuit-interrupter shall be such that there is no shock hazard with any likely fault-condition combination that involves a person in a conductive path from any ungrounded part of the branch circuit or the luminaire to ground. Compliance with this requirement shall be obtained by the use of a listed underwater luminaire and by installation of a listed ground-fault circuit-interrupter in the branch circuit or a listed transformer or power supply for luminaires operating at more than the low-voltage contact limit. Luminaires that depend on submersion for safe operation shall be inherently protected against the hazards of overheating when not submerged. [680.23(A)(1), (A)(3), (A)(7) and (A)(8)]

E4206.4.1 Maximum voltage. Luminaires shall not be installed for operation on supply circuits over 150 volts between conductors. [680.23(A)(4)]

E4206.4.2 Luminaire location. Luminaires mounted in walls shall be installed with the top of the fixture lens not less than 18 inches (457 mm) below the normal water level of the pool, except where the luminaire is listed and identified for use at a depth of not less than 4 inches (102 mm) below the normal water level of the pool. A luminaire facing upward shall have the lens adequately guarded to prevent contact by any person or shall be listed for use without a guard. [680.23(A)(5) and (A)(6)]

E4206.5 Wet-niche luminaires. Forming shells shall be installed for the mounting of all wet-niche underwater luminaires and shall be equipped with provisions for conduit entries. Conduit shall extend from the forming shell to a suitable junction box or other enclosure located as provided in Section E4206.9. Metal parts of the luminaire and forming shell in contact with the pool water shall be of brass or other approved corrosion-resistant metal. [680.23(B)(1)]

The end of flexible-cord jackets and flexible-cord conductor terminations within a luminaire shall be covered with, or encapsulated in, a suitable potting compound to prevent the entry of water into the luminaire through the cord or its con-

ductors. If present, the grounding connection within a luminaire shall be similarly treated to protect such connection from the deteriorating effect of pool water in the event of water entry into the luminaire. [680.23(B)(4)]

Luminaires shall be bonded to and secured to the forming shell by a positive locking device that ensures a low-resistance contact and requires a tool to remove the luminaire from the forming shell. [680.23(B)(5)]

E4206.5.1 Servicing. All wet-niche luminaires shall be removable from the water for inspection, relamping, or other maintenance. The forming shell location and length of cord in the forming shell shall permit personnel to place the removed luminaire on the deck or other dry location for such maintenance. The luminaire maintenance location shall be accessible without entering or going into the pool water. [680.23(B)(6)]

E4206.6 Dry-niche luminaires. Dry-niche luminaires shall have provisions for drainage of water. Other than listed low-voltage luminaires not requiring grounding, a dry-niche luminaire shall have means for accommodating one equipment grounding conductor for each conduit entry. Junction boxes shall not be required but, if used, shall not be required to be elevated or located as specified in Section E4206.9 if the luminaire is specifically identified for the purpose. [680.23(C)(1) and (C)(2)]

E4206.7 No-niche luminaires. No-niche luminaires shall be listed for the purpose and shall be installed in accordance with the requirements of Section E4206.5. Where connection to a forming shell is specified, the connection shall be to the mounting bracket. [680.23(D)]

E4206.8 Through-wall lighting assembly. A through-wall lighting assembly shall be equipped with a threaded entry or hub, or a nonmetallic hub, for the purpose of accommodating the termination of the supply conduit. A through-wall lighting assembly shall meet the construction requirements of Section E4205.4 and be installed in accordance with the requirements of Section E4206.5 Where connection to a forming shell is specified, the connection shall be to the conduit termination point. [680.23(E)]

E4206.9 Junction boxes and enclosures for transformers or ground-fault circuit interrupters. Junction boxes for underwater luminaires and enclosures for transformers and ground-fault circuit-interrupters that supply underwater luminaires shall comply with the following: [680.24(A)]

E4206.9.1 Junction boxes. A junction box connected to a conduit that extends directly to a forming shell or mounting bracket of a no-niche luminaire shall be:

1. Listed as a swimming pool junction box; [680.24(A)(1)]
2. Equipped with threaded entries or hubs or a nonmetallic hub; [680.24(A)(1)(1)]
3. Constructed of copper, brass, suitable plastic, or other approved corrosion-resistant material; [680.24(A)(1)(2)]
4. Provided with electrical continuity between every connected metal conduit and the grounding terminals by means of copper, brass, or other approved corrosion-resistant metal that is integral with the box; and [680.24(A)(1)(3)]
5. Located not less than 4 inches (102 mm), measured from the inside of the bottom of the box, above the ground level, or pool deck, or not less than 8 inches (203 mm) above the maximum pool water level, whichever provides the greatest elevation, and shall be located not less than 4 feet (1219 mm) from the inside wall of the pool, unless separated from the pool by a solid fence, wall or other permanent barrier. Where used on a lighting system operating at the low-voltage contact limit or less, a flush deck box shall be permitted provided that an approved potting compound is used to fill the box to prevent the entrance of moisture; and the flush deck box is located not less than 4 feet (1219 mm) from the inside wall of the pool. [680.24(A)(2)]

E4206.9.2 Other enclosures. An enclosure for a transformer, ground-fault circuit-interrupter or a similar device connected to a conduit that extends directly to a forming shell or mounting bracket of a no-niche luminaire shall be:

1. Listed and labeled for the purpose, comprised of copper, brass, suitable plastic, or other approved corrosion-resistant material; [680.24(B)(1)]
2. Equipped with threaded entries or hubs or a nonmetallic hub; [680.24(B)(2)]
3. Provided with an approved seal, such as duct seal at the conduit connection, that prevents circulation of air between the conduit and the enclosures; [680.24(B)(3)]
4. Provided with electrical continuity between every connected metal conduit and the grounding terminals by means of copper, brass or other approved corrosion-resistant metal that is integral with the enclosures; and [680.24(B)(4)]
5. Located not less than 4 inches (102 mm), measured from the inside bottom of the enclosure, above the ground level or pool deck, or not less than 8 inches (203 mm) above the maximum pool water level, whichever provides the greater elevation, and shall be located not less than 4 feet (1219 mm) from the inside wall of the pool, except where separated from the pool by a solid fence, wall or other permanent barrier. [680.24(B)(2)]

E4206.9.3 Protection of junction boxes and enclosures. Junction boxes and enclosures mounted above the grade of the finished walkway around the pool shall not be located in the walkway unless afforded additional protection, such as by location under diving boards or adjacent to fixed structures. [680.24(C)]

E4206.9.4 Grounding terminals. Junction boxes, transformer and power supply enclosures, and ground-fault circuit-interrupter enclosures connected to a conduit that extends directly to a forming shell or mounting bracket of a no-niche luminaire shall be provided with grounding ter-

minals in a quantity not less than the number of conduit entries plus one. [680.24(D)]

E4206.9.5 Strain relief. The termination of a flexible cord of an underwater luminaire within a junction box, transformer or power supply enclosure, ground-fault circuit-interrupter, or other enclosure shall be provided with a strain relief. [680.24(E)]

E4206.10 Underwater audio equipment. Underwater audio equipment shall be identified for the purpose. [680.27(A)]

E4206.10.1 Speakers. Each speaker shall be mounted in an approved metal forming shell, the front of which is enclosed by a captive metal screen, or equivalent, that is bonded to and secured to the forming shell by a positive locking device that ensures a low-resistance contact and requires a tool to open for installation or servicing of the speaker. The forming shell shall be installed in a recess in the wall or floor of the pool. [680.27(A)(1)]

E4206.10.2 Wiring methods. Rigid metal conduit of brass or other identified corrosion-resistant metal, rigid polyvinyl chloride conduit, rigid thermosetting resin conduit or liquid-tight flexible nonmetallic conduit (LFNC-B) shall extend from the forming shell to a suitable junction box or other enclosure as provided in Section E4206.9. Where rigid nonmetallic conduit or liquid-tight flexible nonmetallic conduit is used, an 8 AWG solid or stranded insulated copper bonding jumper shall be installed in this conduit with provisions for terminating in the forming shell and the junction box. The termination of the 8 AWG bonding jumper in the forming shell shall be covered with, or encapsulated in, a suitable potting compound to protect such connection from the possible deteriorating effect of pool water. [680.27(A)(2)]

E4206.10.3 Forming shell and metal screen. The forming shell and metal screen shall be of brass or other approved corrosion-resistant metal. Forming shells shall include provisions for terminating an 8 AWG copper conductor. [680.27(A)(3)]

E4206.11 Electrically operated pool covers. The electric motors, controllers, and wiring for pool covers shall be located not less than 5 feet (1524 mm) from the inside wall of the pool except where separated from the pool by a wall, cover, or other permanent barrier. Electric motors installed below grade level shall be of the totally enclosed type. The electric motor and controller shall be connected to a branch circuit protected by a ground-fault circuit-interrupter. The device that controls the operation of the motor for an electrically operated pool cover shall be located so that the operator has full view of the pool. [680.27(B)(1) and (B)(2)]

E4206.12 Electric pool water heaters. Electric pool water heaters shall have the heating elements subdivided into loads not exceeding 48 amperes and protected at not more than 60 amperes. The ampacity of the branch-circuit conductors and the rating or setting of overcurrent protective devices shall be not less than 125 percent of the total nameplate load rating. (680.9)

E4206.13 Pool area heating. The provisions of Sections E4206.13.1 through E4206.13.3 shall apply to all pool deck areas, including a covered pool, where electrically operated comfort heating units are installed within 20 feet (6096 mm) of the inside wall of the pool. [680.27(C)]

E4206.13.1 Unit heaters. Unit heaters shall be rigidly mounted to the structure and shall be of the totally enclosed or guarded types. Unit heaters shall not be mounted over the pool or within the area extending 5 feet (1524 mm) horizontally from the inside walls of a pool. [680.27(C)(1)]

E4206.13.2 Permanently wired radiant heaters. Electric radiant heaters shall be suitably guarded and securely fastened to their mounting devices. Heaters shall not be installed over a pool or within the area extending 5 feet (1524 mm) horizontally from the inside walls of the pool and shall be mounted not less than 12 feet (3658 mm) vertically above the pool deck. [680.27(C)(2)]

E4206.13.3 Radiant heating cables prohibited. Radiant heating cables embedded in or below the deck shall be prohibited. [680.27(C)(3)]

SECTION E4207
STORABLE SWIMMING POOLS, STORABLE SPAS, AND STORABLE HOT TUBS

E4207.1 Pumps. A cord and plug-connected pool filter pump for use with storable pools shall incorporate an approved system of double insulation or its equivalent and shall be provided with means for grounding only the internal and nonaccessible noncurrent-carrying metal parts of the appliance.

The means for grounding shall be an equipment grounding conductor run with the power-supply conductors in a flexible cord that is properly terminated in a grounding-type attachment plug having a fixed grounding contact. Cord and plug-connected pool filter pumps shall be provided with a ground-fault circuit interrupter that is an integral part of the attachment plug or located in the power supply cord within 12 inches (305 mm) of the attachment plug. (680.31)

E4207.2 Ground-fault circuit-interrupters required. Electrical equipment, including power-supply cords, used with storable pools shall be protected by ground-fault circuit-interrupters. 125-volt, 15- and 20-ampere receptacles located within 20 feet (6096 mm) of the inside walls of a storable pool, storable spa, or storable hot tub shall be protected by a ground-fault circuit interrupter. In determining these dimensions, the distance to be measured shall be the shortest path that the supply cord of an appliance connected to the receptacle would follow without passing through a floor, wall, ceiling, doorway with hinged or sliding door, window opening, or other effective permanent barrier. (680.32)

E4207.3 Luminaires. Luminaires for storable pools, storable spas, and storable hot tubs shall not have exposed metal parts and shall be listed for the purpose as an assembly. In addition, luminaires for storable pools shall comply with the requirements of Section E4207.3.1 or E4207.3.2. (680.33)

E4207.3.1 Within the low-voltage contact limit. A luminaire installed in or on the wall of a storable pool shall be

part of a cord and plug-connected lighting assembly. The assembly shall:

1. Have a luminaire lamp that is suitable for the use at the supplied voltage;
2. Have an impact-resistant polymeric lens, luminaire body, and transformer enclosure;
3. Have a transformer meeting the requirements of section E4206.1 with a primary rating not over 150 volts; and
4. Have no exposed metal parts. [680.33(A)]

E4207.3.2 Over the low-voltage contact limit but not over 150 volts. A lighting assembly without a transformer or power supply, and with the luminaire lamp(s) operating at over the low-voltage contact limit, but not over 150 volts, shall be permitted to be cord and plug-connected where the assembly is listed as an assembly for the purpose and complies with all of the following:

1. It has an impact-resistant polymeric lens and luminaire body.
2. A ground-fault circuit interrupter with open neutral conductor protection is provided as an integral part of the assembly.
3. The luminaire lamp is permanently connected to the ground-fault circuit interrupter with open-neutral protection.
4. It complies with the requirements of Section E4206.4.
5. It has no exposed metal parts. [680.33(B)]

E4207.4 Receptacle locations. Receptacles shall be located not less than 6 feet (1829 mm) from the inside walls of a storable pool, storable spa or storable hot tub. In determining these dimensions, the distance to be measured shall be the shortest path that the supply cord of an appliance connected to the receptacle would follow without passing through a floor, wall, ceiling, doorway with hinged or sliding door, window opening, or other effective permanent barrier. (680.34)

E4207.5 Clearances. Overhead conductor installations shall comply with Section E4203.6 and underground conductor installations shall comply with Section E4203.7.

E4207.6 Disconnecting means. Disconnecting means for storable pools and storable/portable spas and hot tubs shall comply with Section E4203.3.

E4207.7 Ground-fault circuit interrupters. Ground-fault circuit interrupters shall comply with Section E4206.2.

E4207.8 Grounding of equipment. Equipment shall be grounded as required by Section E4205.1.

E4207.9 Pool water heaters. Electric pool water heaters shall comply with Section E4206.12.

SECTION E4208
SPAS AND HOT TUBS

E4208.1 Ground-fault circuit-interrupters. The outlet(s) that supplies a self-contained spa or hot tub, or a packaged spa or hot tub equipment assembly, or a field-assembled spa or hot tub with a heater load of 50 amperes or less, shall be protected by a ground-fault circuit-interrupter. (680.44)

A listed self-contained unit or listed packaged equipment assembly marked to indicate that integral ground-fault circuit-interrupter protection is provided for all electrical parts within the unit or assembly, including pumps, air blowers, heaters, lights, controls, sanitizer generators and wiring, shall not require that the outlet supply be protected by a ground-fault circuit interrupter. [680.44(A)]

E4208.2 Electric water heaters. Electric spa and hot tub water heaters shall be listed and shall have the heating elements subdivided into loads not exceeding 48 amperes and protected at not more than 60 amperes. The ampacity of the branch-circuit conductors, and the rating or setting of overcurrent protective devices, shall be not less than 125 percent of the total nameplate load rating. (680.9)

E4208.3 Underwater audio equipment. Underwater audio equipment used with spas and hot tubs shall comply with the provisions of Section E4206.10. [680.43(G)]

E4208.4 Emergency switch for spas and hot tubs. A clearly labeled emergency shutoff or control switch for the purpose of stopping the motor(s) that provides power to the recirculation system and jet system shall be installed at a point that is readily accessible to the users, adjacent to and within sight of the spa or hot tub and not less than 5 feet (1524 mm) away from the spa or hot tub. This requirement shall not apply to single-family dwellings. (680.41)

SECTION E4209
HYDROMASSAGE BATHTUBS

E4209.1 Ground-fault circuit-interrupters. Hydromassage bathtubs and their associated electrical components shall be supplied by an individual branch circuit(s) and protected by a readily accessible ground-fault circuit-interrupter. All 125-volt, single-phase receptacles not exceeding 30 amperes and located within 6 feet (1829 mm) measured horizontally of the inside walls of a hydromassage tub shall be protected by a ground-fault circuit interrupter(s). (680.71)

E4209.2 Other electric equipment. Luminaires, switches, receptacles, and other electrical equipment located in the same room, and not directly associated with a hydromassage bathtub, shall be installed in accordance with the requirements of this code relative to the installation of electrical equipment in bathrooms. (680.72)

E4209.3 Accessibility. Hydromassage bathtub electrical equipment shall be accessible without damaging the building structure or building finish. Where the hydromassage bathtub is cord- and plug-connected with the supply receptacle accessible only through a service access opening, the receptacle shall be installed so that its face is within direct view and not more than 12 inches (305 mm) from the plane of the opening. (680.73)

E4209.4 Bonding. Both metal piping systems and grounded metal parts in contact with the circulating water shall be bonded together using an insulated, covered or bare solid copper bonding jumper not smaller than 8 AWG. The bond-

ing jumper shall be connected to the terminal on the circulating pump motor that is intended for this purpose. The bonding jumper shall not be required to be connected to a double insulated circulating pump motor. The 8 AWG or larger solid copper bonding jumper shall be required for equipotential bonding in the area of the hydromassage bathtub and shall not be required to be extended or attached to any remote panelboard, service equipment, or any electrode. Where a double-insulated circulating pump motor is used, the 8 AWG or larger solid copper bonding jumper shall be long enough to terminate on a replacement nondouble-insulated pump motor and shall be terminated to the equipment grounding conductor of the branch circuit for the motor. (680.74)

CHAPTER 43

CLASS 2 REMOTE-CONTROL, SIGNALING AND POWER-LIMITED CIRCUITS

SECTION E4301 GENERAL

E4301.1 Scope. This chapter contains requirements for power supplies and wiring methods associated with Class 2 remote-control, signaling, and power-limited circuits that are not an integral part of a device or appliance. Other classes of remote-control, signaling and power-limited conductors shall comply with Article 725 of NFPA 70. (725.1)

E4301.2 Definitions.

CLASS 2 CIRCUIT. That portion of the wiring system between the load side of a Class 2 power source and the connected equipment. Due to its power limitations, a Class 2 circuit considers safety from a fire initiation standpoint and provides acceptable protection from electric shock. (725.2)

REMOTE-CONTROL CIRCUIT. Any electrical circuit that controls any other circuit through a relay or an equivalent device. (Article 100)

SIGNALING CIRCUIT. Any electrical circuit that energizes signaling equipment. (Article 100)

SECTION E4302 POWER SOURCES

E4302.1 Power sources for Class 2 circuits. The power source for a Class 2 circuit shall be one of the following:

1. A listed Class 2 transformer.
2. A listed Class 2 power supply.
3. Other listed equipment marked to identify the Class 2 power source.
4. Listed information technology (computer) equipment limited power circuits.
5. A dry-cell battery provided that the voltage is 30 volts or less and the capacity is equal to or less than that available from series connected No. 6 carbon zinc cells. [725.121(A)]

E4302.2 Interconnection of power sources. A Class 2 power source shall not have its output connections paralleled or otherwise interconnected with another Class 2 power source except where listed for such interconnection. [725.121(B)]

SECTION E4303 WIRING METHODS

E4303.1 Wiring methods on supply side of Class 2 power source. Conductors and equipment on the supply side of the power source shall be installed in accordance with the appropriate requirements of Chapters 34 through 41. Transformers or other devices supplied from electric light or power circuits shall be protected by an over-current device rated at not over 20 amperes. The input leads of a transformer or other power source supplying Class 2 circuits shall be permitted to be smaller than 14 AWG, if not over 12 inches (305 mm) long and if the conductor insulation is rated at not less than 600 volts. In no case shall such leads be smaller than 18 AWG. (725.127 and 725.127 Exception)

E4303.2 Wiring methods and materials on load side of the Class 2 power source. Class 2 cables installed as wiring within buildings shall be listed as being resistant to the spread of fire and listed as meeting the criteria specified in Sections E4303.2.1 through E4303.2.3. Cables shall be marked in accordance with Section E4303.2.4. Cable substitutions as described in Table E4303.2 and wiring methods covered in Chapter 38 shall also be permitted. (725.130 (B); 725.135 (A), (C), (G) and (M); 725.154; Table 725.154; Figure 725.154 (A); and 725.179)

TABLE E4303.2
CABLE USES AND PERMITTED SUBSTITUTIONS
[Figure 725.154(A)]

CABLE TYPE	USE	PERMITTED SUBSTITUTIONS[a]
CL2P	Class 2 Plenum Cable	CMP, CL3P
CL2R	Class 2 Plenum Cable	CMP, CL3P, CL2P, CMR, CL3R
CL2	Class 2 Cable	CMP, CL3P, CL2P, CMR, CL3R, CL2R CMG, CM, CL3
CL2X	Class 2 Cable, Limited Use	CMP, CL3P CL2P, CMR, CL3R, CL2R, CMG, CM, CL3, CL2, CMX, CL3X

a. For identification of cables other than Class 2 cables, see NFPA 70.

E4303.2.1 Type CL2P cables. Cables installed in ducts, plenums and other spaces used to convey environmental air shall be Type CL2P cables listed as being suitable for the use and listed as having adequate fire-resistant and low smoke-producing characteristics. [725.179(A)]

E4303.2.2 Type CL2 cables. Cables for general-purpose use, shall be listed as being resistant to the spread of fire and listed for the use. [725.179 (C)]

E4303.2.3 Type CL2X cables. Type CL2X limited-use cable shall be listed as being suitable for use in dwellings and for the use and in raceways and shall also be listed as being flame retardant. Cables with a diameter of less than $^1/_4$ inch (6.4 mm) shall be permitted to be installed without a raceway. [725.179 (D)]

E4303.2.4 Type CL2R cables. Cables installed in a vertical run in a shaft or installed from floor to floor shall be listed as suitable for use in a vertical run in a shaft or from floor to floor and shall also be listed as having fire-resistant characteristics capable of preventing fire from being conveyed from floor to floor. [725.179(B)]

Exception: CL2X and CL3X cables with a diameter of less than $^1/_4$ inch (6.4 mm) and CL2 and CL3 cables shall be permitted in risers in one- and two-family dwelling units. [725.154 (G)]

E4303.2.5 Marking. Cables shall be marked in accordance with Table E4303.2.5. Voltage ratings shall not be marked on cables.

Table E4303.2.5 [Table 725.179(K)]
CABLE MARKING

CABLE MARKING	TYPE
CL2P	Class 2 plenum cable
CL2R	Class 2 riser cable
CL2	Class 2 cable
CL2X	Class 2 cable, limited use

SECTION E4304
INSTALLATION REQUIREMENTS

E4304.1 Separation from other conductors. In cables, compartments, enclosures, outlet boxes, device boxes, and raceways, conductors of Class 2 circuits shall not be placed in any cable, compartment, enclosure, outlet box, device box, raceway, or similar fitting with conductors of electric light, power, Class 1 and nonpower-limited fire alarm circuits. (725.136)

Exceptions:

1. Where the conductors of the electric light, power, Class 1 and nonpower-limited fire alarm circuits are separated by a barrier from the Class 2 circuits. In enclosures, Class 2 circuits shall be permitted to be installed in a raceway within the enclosure to separate them from Class 1, electric light, power and nonpower-limited fire alarm circuits. [725.136(B)]
2. Class 2 conductors in compartments, enclosures, device boxes, outlet boxes and similar fittings where electric light, power, Class 1 or nonpower-limited fire alarm circuit conductors are introduced solely to connect to the equipment connected to the Class 2 circuits. The electric light, power, Class 1 and nonpower-limited fire alarm circuit conductors shall be routed to maintain a minimum of $^1/_4$ inch (6.4 mm) separation from the conductors and cables of the Class 2 circuits; or the electric light power, Class 1 and nonpower-limited fire alarm circuit conductors operate at 150 volts or less to ground and the Class 2 circuits are installed using Types CL3, CL3R, or CL3P or permitted substitute cables, and provided that these Class 3 cable conductors extending beyond their jacket are separated by a minimum of $^1/_4$ inch (6.4 mm) or by a nonconductive sleeve or nonconductive barrier from all other conductors. [725.136(D)]

E4304.2 Other applications. Conductors of Class 2 circuits shall be separated by not less than 2 inches (51 mm) from conductors of any electric light, power, Class 1 or nonpower-limited fire alarm circuits except where one of the following conditions is met:

1. All of the electric light, power, Class 1 and nonpower-limited fire alarm circuit conductors are in raceways or in metal-sheathed, metal-clad, nonmetallic-sheathed or Type UF cables.
2. All of the Class 2 circuit conductors are in raceways or in metal-sheathed, metal-clad, nonmetallic-sheathed or Type UF cables. [725.136(I)]

E4304.3 Class 2 circuits with communications circuits. Where Class 2 circuit conductors are in the same cable as communications circuits, the Class 2 circuits shall be classified as communications circuits and shall meet the requirements of Article 800 of NFPA 70. The cables shall be listed as communications cables or multipurpose cables.

Cables constructed of individually listed Class 2 and communications cables under a common jacket shall be permitted to be classified as communications cables. The fire-resistance rating of the composite cable shall be determined by the performance of the composite cable. [725.139(D)]

E4304.4 Class 2 cables with other circuit cables. Jacketed cables of Class 2 circuits shall be permitted in the same enclosure or raceway with jacketed cables of any of the following:

1. Power-limited fire alarm systems in compliance with Article 760 of NFPA 70.
2. Nonconductive and conductive optical fiber cables in compliance with Article 770 of NFPA 70.
3. Communications circuits in compliance with Article 800 of NFPA 70.
4. Community antenna television and radio distribution systems in compliance with Article 820 of NFPA 70.
5. Low-power, network-powered broadband communications in compliance with Article 830 of NFPA 70. [725.139(E)]

E4304.5 Installation of conductors and cables. Cables and conductors installed exposed on the surface of ceilings and sidewalls shall be supported by the building structure in such a manner that they will not be damaged by normal building use. Such cables shall be supported by straps, staples, hangers, cable ties or similar fittings designed so as to not damage the cable. Nonmetallic cable ties and other nonmetallic accessories used to secure and support cables located in stud cavity and joist space plenums shall be listed as having low smoke and heat release properties. The installation shall comply with Table E3802.1 regarding cables run parallel with framing members and furring strips. The installation of wires and cables shall not prevent access to equipment nor prevent removal of panels, including suspended ceiling panels. Raceways shall not be used as a means of support for Class 2 circuit conductors, except where the supporting raceway contains conductors supplying power to the functionally associated equipment controlled by the Class 2 conductors. [300.22 (C)(1) and 725.24]

Part IX—Referenced Standards

CHAPTER 44

REFERENCED STANDARDS

This chapter lists the standards that are referenced in various sections of this document. The standards are listed herein by the promulgating agency of the standard, the standard identification, the effective date and title, and the section or sections of this document that reference the standard. The application of the referenced standards shall be as specified in Section R102.4.

AAMA

American Architectural Manufacturers Association
1827 Walden Office Square, Suite 550
Schaumburg, IL 60173

Standard reference number	Title	Referenced in code section number
AAMA/WDMA/CSA 101/I.S.2/A440—11	North American Fenestration Standards/Specifications for Windows, Doors and Skylights	R308.6.9, R609.3, N1102.4.3
450—10	Voluntary Performance Rating Method for Mulled Fenestration Assemblies	R609.8
506—11	Voluntary Specifications for Hurricane Impact and Cycle Testing of Fenestration Products	R609.6.1
711—13	Voluntary Specification for Self-adhering Flashing Used for Installation of Exterior Wall Fenestration Products	R703.4
712—11	Voluntary Specification for Mechanically Attached Flexible Flashing	R703.4
714—12	Voluntary Specification for Liquid Applied Flashing Used to Create a Water-resistive Seal around Exterior Wall Openings in Buildings	R703.4
AAMA/NPEA/NSA 2100—12	Specifications for Sunrooms	R302.2.1.1

ACI

American Concrete Institute
38800 Country Club Drive
Farmington Hills, MI 48331

Standard reference number	Title	Referenced in code section number
318—14	Building Code Requirements for Structural Concrete	R301.2.2.2.4, R301.2.2.3.4, R402.2, Table R404.1.2(2), Table R404.1.2(5), Table R404.1.2(6), Table R404.1.2(7), Table R404.1.2(8), Table R404.1.2(9), R404.1.3, R404.1.3.1, R404.1.3.3, R404.1.3.4, R404.1.4.2, R404.5.1, R608.1, R608.1.1, R608.1.2, R608.2, R608.5.1, R608.6.1, R608.8.2, R608.9.2, R608.9.3
332—14	Code Requirements for Residential Concrete Construction	R402.2, R403.1, R404.1.3, R404.1.3.4, R404.1.4.2, R506.1
530—13	Building Code Requirements for Masonry Structures	R404.1.2, R606.1, R606.1.1, R606.12.1, R606.12.2.3.2, R606.12.2.3.1, R703.12
R606.12.3.1530.1—13	Specification for Masonry Structures	R404.1.2, R606.1, R606.1.1, R606.2.9, R606.2.12, R606.12.1, R606.12.2.3.2, R606.12.3.1, 703.12

ACCA

Air Conditioning Contractors of America
2800 Shirlington Road, Suite 300
Arlington, VA 22206

Standard reference number	Title	Referenced in code section number
Manual D—2011	Residential Duct Systems	M1601.1, M1602.2
Manual J—2011	Residential Load Calculation—Eighth Edition	N1103.6, M1401.3
Manual S—13	Residential Equipment Selection	N1103.6, M1401.3

AISI

American Iron and Steel Institute
25 Massachusetts Avenue, NW Suite 800
Washington, DC 20001

Standard reference number	Title	Referenced in code section number
AISI S100—12	North American Specification for the Design of Cold-formed Steel Structural Members, 2012	R505.1.3, R603.6, R608.9.2, R608.9.3, R804.3.6
AISI S200—12	North American Standard for Cold-formed Steel Framing—General Provisions 2012	R702.3.3
AISI S220—11	North American Standard for Cold-formed Steel Framing—Nonstructural Members	R702.3.3
AISI S230—07/ S3-12 (2012)	Standard for Cold-formed Steel Framing—Prescriptive Method for One- and Two-family Dwellings, 2007 with Supplement 3, dated 2012 (Reaffirmed 2012)	R301.1.1, R301.2.1.1, R301.2.2.3.1, R301.2.2.3.5, R603.6, R603.9.4.1, R603.9.4.2, R608.9.2, R608.9.3, Figure 608.9(11), R608.10

AMCA

Air Movement and Control Association
300 West University
Arlington Heights, IL 60004

Standard reference number	Title	Referenced in code section number
ANSI/AMCA 210-ANSI/ASHRAE 51—07	Laboratory Methods of Testing Fans for Aerodynamic Performance Rating	Table M1506.2

AMD

Association of Millwork Distributors Standards
10047 Robert Trent Parkway
New Port Richey, FL 34655-4649

Standard reference number	Title	Referenced in code section number
AMD 100—2013	Structural Performance Ratings of Side Hinged Exterior Door Systems and Procedures for Component Substitution	R609.3

ANCE

Association of the Electric Sector
Av. Lázaro Cardenas No. 869
Col. Nueva Industrial Vallejo
C.P. 07700 México D.F.

Standard reference number	Title	Referenced in code section number
UL/CSA/ANCE 60335-2—2012	Standard for Household and Similar Electric Appliances, Part 2: Particular Requirements for Motor-compressors	M1403.1, M1412.1, M1413.1

ANSI

American National Standards Institute
25 West 43rd Street, Fourth Floor
New York, NY 10036

Standard reference number	Title	Referenced in code section number
A108.1A—99	Installation of Ceramic Tile in the Wet-set Method, with Portland Cement Mortar	R702.4.1
A108.1B—99	Installation of Ceramic Tile, Quarry Tile on a Cured Portland Cement Mortar Setting Bed with Dry-set or Latex Portland Mortar	R702.4.1

3214

ANSI—continued

A108.4—99	Installation of Ceramic Tile with Organic Adhesives or Water-Cleanable Tile-setting Epoxy Adhesive	R702.4.1
A108.5—99	Installation of Ceramic Tile with Dry-set Portland Cement Mortar or Latex Portland Cement Mortar	R702.4.1
A108.6—99	Installation of Ceramic Tile with Chemical-resistant, Water-cleanable Tile-setting and -grouting Epoxy	R702.4.1
A108.11—99	Interior Installation of Cementitious Backer Units	R702.4.1
A118.1—99	American National Standard Specifications for Dry-set Portland Cement Mortar	R702.4.1
A118.3—99	American National Standard Specifications for Chemical-resistant, Water-cleanable Tile-setting and -grouting Epoxy, and Water-cleanable Tile-setting Epoxy Adhesive	R702.4.1
A118.4—99	American National Standard Specifications for Latex-Portland Cement Mortar	R606.2.10
A118.10—99	Specification for Load-bearing, Bonded, Waterproof Membranes for Thin-set Ceramic Tile and Dimension Stone Installation	P2709.2, P2709.2.4
A136.1—99	American National Standard Specifications for Organic Adhesives for Installation of Ceramic Tile	R702.4.1
A137.1—2012	American National Standard Specifications for Ceramic Tile	R702.4.1
LC1/CSA 6.26—13	Fuel Gas Piping Systems Using Corrugated Stainless Steel Tubing (CSST)	G2414.5.3
LC4/CSA 6.32—12	Press-connect Metallic Fittings for Use in Fuel Gas Distribution Systems	G2414.10.2
Z21.1—2010	Household Cooking Gas Appliances	G2447.1
Z21.5.1/CSA 7.1—14	Gas Clothes Dryers—Volume I—Type I Clothes Dryers	G2438.1
Z21.8—94 (R2002)	Installation of Domestic Gas Conversion Burners	G2443.1
Z21.10.1/CSA 4.1—12	Gas Water Heaters—Volume I—Storage Water Heaters with Input Ratings of 75,000 Btu per hour or Less	G2448.1
Z21.10.3/CSA 4.3—11	Gas Water Heaters—Volume III—Storage Water Heaters with Input Ratings above 75,000 Btu per hour, Circulating and Instantaneous	G2448.1
Z21.11.2—11	Gas-fired Room Heaters—Volume II—Unvented Room Heaters	G2445.1
Z21.13/CSA 4.9—11	Gas-fired Low-pressure Steam and Hot Water Boilers	G2452.1
Z21.15/CSA 9.1—09	Manually Operated Gas Valves for Appliances, Appliance Connector Valves and Hose End Valves	Table G2420.1.1
Z21.22—99 (R2003)	Relief Valves for Hot Water Supply Systems—with Addenda Z21.22a—2000 (R2003) and 21.22b—2001 (R2003)	P2804.2, P2804.7
Z21.24/CGA 6.10—06	Connectors for Gas Appliances	G2422.1
Z21.40.1/ CSA 2.91—96 (R2011)	Gas-fired, Heat-activated Air-conditioning and Heat Pump Appliances	G2449.1
Z21.40.2/ CSA 2.92—96 (R2011)	Air-conditioning and Heat Pump Appliances (Thermal Combustion)	G2449.1
Z21.42—2014	Gas-fired Illuminating Appliances	G2450.1
Z21.47/CSA 2.3—12	Gas-fired Central Furnaces	G2442.1
Z21.50/CSA 2.22—12	Vented Gas Fireplaces	G2434.1
Z21.56/CSA 4.7—13	Gas-fired Pool Heaters	G2441.1
Z21.58—95/CSA 1.6—13	Outdoor Cooking Gas Appliances	G2447.1
Z21.60/CSA 2.26—12	Decorative Gas Appliances for Installation in Solid Fuel-burning Fireplaces	G2432.1
Z21.75/CSA 6.27—07	Connectors for Outdoor Gas Appliances and Manufactured Homes	G2422.1
Z21.80—11	Line Pressure Regulators	G2421.1
ANSI/CSA America FCI—12	Stationary Fuel Cell Power Systems	M1903.1
Z21.84—12	Manually Listed, Natural Gas Decorative Gas Appliances for Installation in Solid Fuel-burning Fireplaces	G2432.1, G2432.2
Z21.86—08	Gas-fired Vented Space Heating Appliances	G2436.1, G2437.1, G2446.1
Z21.88/CSA 2.33—15	Vented Gas Fireplace Heaters	G2435.1
Z21.91—07	Ventless Firebox Enclosures for Gas-fired Unvented Decorative Room Heaters	G2445.7.1
Z21.97—12	Outdoor Decorative Appliances	G2454.1
Z83.6—90 (R1998)	Gas-fired Infrared Heaters	G2451.1
Z83.8/CSA 2.6—09	Gas-fired Unit Heaters, Gas Packaged Heaters, Gas Utility Heaters and Gas-fired Duct Furnaces	G2444.1
Z83.19—01 (R2009)	Gas-fuel High-intensity Infrared Heaters	G2451.1
Z83.20—08	Gas-fired Low-intensity Infared Heaters Outdoor Decorative Appliances	G2451.1
Z97.1—2014	Safety Glazing Materials Used in Buildings—Safety Performance Specifications and Methods of Test	R308.1.1, R308.3.1

APA

APA—The Engineered Wood Association
7011 South 19th
Tacoma, WA 98466

Standard reference number	Title	Referenced in code section number
ANSI/A190.1—12	Structural Glued-laminated Timber	R502.1.3, R602.1.3, R802.1.2
ANSI/APA PRP 210—08	Standard for Performance-rated Engineered Wood Siding	R604.1, Table R703.3(1), R703.3.3
ANSI/APA PRG 320—2012	Standard for Performance-rated Cross Laminated Timber	R502.1.6, R602.1.6, R802.1.6
ANSI/APA PRR 410—2011	Standard for Performance-rated Engineered Wood Rim Boards	R502.1.7, R602.1.7, R802.1.7
APA E30—11	Engineered Wood Construction Guide	Table R503.2.1.1(1), R503.2.2, R803.2.2, R803.2.3

ASCE/SEI

American Society of Civil Engineers
Structural Engineering Institute
1801 Alexander Bell Drive
Reston, VA 20191

Standard reference number	Title	Referenced in code section number
5—13	Building Code Requirements for Masonry Structures	R404.1.2, R606.1, R606.1.1, R606.12.1, R606.12.2.3.1, R606.12.2.3.2, R606.12.3.1, R703.12
6—13	Specification for Masonry Structures	R404.1.2, R606.1, R606.1.1, R606.2.9, R606.2.12, R606.12.1, R606.12.2.3.1, R606.12.2.3.2, R606.12.3.1, R703.12
7—10	Minimum Design Loads for Buildings and Other Structures with Supplement No. 1	R301.2.1.1, R301.2.1.2, R301.2.1.2.1, R301.2.1.5, R301.2.1.5.1, Table R608.6(1), Table R608.6(2), Table R608.6(3), Table R608.6(4), Table R608.7(1A), Table R608.7(1B), Table R608.7(1C), R608.9.2, R608.9.3, R609.2, AH107.4.3
24—13	Flood-resistant Design and Construction	R301.2.4, R301.2.4.1, R322.1, R322.1.1, R322.1.6, R322.1.9, R322.2.2, R322.3.3
32—01	Design and Construction of Frost-protected Shallow Foundations	R403.1.4.1

ASHRAE

American Society of Heating, Refrigerating and Air-Conditioning Engineers, Inc.
1791 Tullie Circle, NE
Atlanta, GA 30329

Standard reference number	Title	Referenced in code section number
ASHRAE—2013	ASHRAE Handbook of Fundamentals	N1102.1.5, Table N1105.5.2(1), P3001.2, P3101.4
ASHRAE 193—2010	Method of Test for Determining Air Tightness of HVAC Equipment	N1103.3.2.1
34—2013	Designation and Safety Classification of Refrigerants	M1411.1

ASME

American Society of Mechanical Engineers
Three Park Avenue
New York, NY 10016-5990

Standard reference number	Title	Referenced in code section number
ASME/A17.1/ CSA B44—2013	Safety Code for Elevators and Escalators	R321.1
A18.1—2008	Safety Standard for Platforms and Stairway Chair Lifts	R321.2
A112.1.2—2004	Air Gaps in Plumbing Systems	P2717.1, Table P2902.3, P2902.3.1
A112.1.3—2000 (Reaffirmed 2011)	Air Gap Fittings for Use with Plumbing Fixtures, Appliances and Appurtenances	Table P2701.1, P2717.1, Table P2902.3, P2902.3.1

ASME—continued

A112.3.1—2007	Stainless Steel Drainage Systems for Sanitary, DWV, Storm and Vacuum Applications Above and Below Ground	Table P3002.1(1), Table P3002.1(2), Table P3002.2, Table P3002.3, Table P3302.1
A112.3.4—2013/ CSA B45.9—13	Macerating Toilet Systems and Related Components	Table P2701.1, P3007.5
A112.4.1—2009	Water Heater Relief Valve Drain Tubes	P2804.6.1
A112.4.2—2009	Water-closet Personal Hygiene Devices	P2722.5
A112.4.3—1999 (R2010)	Plastic Fittings for Connecting Water Closets to the Sanitary Drainage System	P3003.14
A112.4.14—2004 (R2010)	Manually Operated, Quarter-turn Shutoff Valves for Use in Plumbing Systems	Table P2903.9.4
A112.6.1M—1997 (R2008)	Floor-affixed Supports for Off-the-floor Plumbing Fixtures for Public Use	Table P2701.1, P2702.4
A112.6.2—2000 (R2010)	Framing-affixed Supports for Off-the-floor Water Closets with Concealed Tanks	Table P2701.1, P2702.4
A112.6.3—2001 (R2007)	Floor and Trench Drains	Table P2701.1
A112.14.1—03 (Reaffirmed 2008)	Backwater Valves	P3008.2
A112.18.1—2012/ CSA B125.1—2012	Plumbing Supply Fittings	Table P2701.1, P2708.5, P2722.1, P2722.3, P2727.2, P2902.2, Table P2903.9.4
A112.18.2—2011/ CSA B125.2—2011	Plumbing Waste Fittings	Table P2701.1, P2702.2
A112.18.3—2002 (Reaffirmed 2008)	Performance Requirements for Backflow Protection Devices and Systems in Plumbing Fixture Fittings	P2708.5, P2722.3
A112.18.6/ CSA B125.6—2009	Flexible Water Connectors	P2906.7
A112.19.1—2013/ CSA B45.2—2013	Enameled Cast-iron and Enameled Steel Plumbing Fixtures	Table P2701.1, P2711.1
A112.19.2—2013/ CSA B45.1—2013	Ceramic Plumbing Fixtures	Table P2701.1, P2705.1, P2711.1, P2712.1, P2712.2, P2712.9
A112.19.3—2008/ CSA B45.4—08 (R2013)	Stainless Steel Plumbing Fixtures	Table P2701.1, P2705.1, P2711.1, P2712.1
A112.19.5—2011/ CSA B45.15—2011	Flush Valves and Spuds for Water-closets, Urinals and Tanks	Table P2701.1
A112.19.7/2012 CSA B45.10—2012	Hydromassage Bathtub Systems	Table P2701.1
A112.19.12—2006	Wall-mounted and Pedestal-mounted, Adjustable and Pivoting Lavatory and Sink Carrier Systems	Table P2701.1, P2711.4, P2714.2
A112.19.14—2006 (R2011)	Six-Liter Water Closets Equipped with Dual Flushing Device	P2712.1
A112.19.15—2005	Bathtub/Whirlpool Bathtubs with Pressure-sealed Doors	Table P2701.1, P2713.2
A112.36.2m—1991 (R2008)	Cleanouts	P3005.2.10.2
B1.20.1—1983 (R2006)	Pipe Threads, General-purpose (Inch)	G2414.9, P3003.6.4, P3003.17.1, P3003.9.3
B16.3—2011	Malleable-iron-threaded Fittings, Classes 150 and 300	Table P2906.6
B16.4—2011	Gray-iron-threaded Fittings	Table P2906.6, Table P3002.3
B16.9—2007	Factory-made, Wrought-steel Buttwelding Fittings	Table P2906.6
B16.11—2011	Forged Fittings, Socket-welding and Threaded	Table P2906.6
B16.12—2009	Cast-iron-threaded Drainage Fittings	Table P3002.3
B16.15—2011	Cast-bronze-threaded Fittings	Table P2906.6, Table P3002.3
B16.18—2012	Cast-copper-alloy Solder Joint Pressure Fittings	Table P2906.6, Table P3002.3
B16.22—2001 (R2010)	Wrought-copper and Copper-alloy Solder Joint Pressure Fittings	Table P2906.6, Table P3002.3
B16.23—2002 (R2011)	Cast-copper-alloy Solder Joint Drainage Fittings (DWV)	Table P3002.3
B16.26—2011	Cast-copper-alloy Fittings for Flared Copper Tubes	Table P2906.6, Table P3002.3
B16.28—1994	Wrought-steel Buttwelding Short Radius Elbows and Returns	Table P2906.6
B16.29—2012	Wrought-copper and Wrought-copper-alloy Solder Joint Drainage Fittings (DWV)	Table P3002.3
B16.33—2012	Manually Operated Metallic Gas Valves for Use in Gas Piping Systems up to 125 psig (Sizes $^1/_2$ through 2)	Table G2420.1.1
B16.34—2009	Valves—Flanged, Threaded and Welding End	Table P2903.9.4
B16.44—2002 (Reaffirmed 2007)	Manually Operated Metallic Gas Valves for Use in Above-ground Piping Systems up to 5 psi	Table G2420.1.1
B16.51—2011	Copper and Copper Alloy Press-Connect Pressure Fittings	Table 2906.6
B36.10M—2004	Welded and Seamless Wrought-steel Pipe	G2414.4.2
BPVC—2010/2011 addenda	ASME Boiler and Pressure Vessel Code (2007 Edition)	M2001.1.1, G2452.1
CSD-1—2011	Controls and Safety Devices for Automatically Fired Boilers	M2001.1.1, G2452.1
ASSE 1016/ASME 112.1016/ CSA B125.16—2011	Performance Requirements for Automatic Compensating Valves for Individual Showers and Tub/Shower Combinations	Table P2701.1, P2708.4, P2722.2

ASSE

American Society of Sanitary Engineering
901 Canterbury, Suite A
Westlake, OH 44145

Standard reference number	Title	Referenced in code section number
1001—2008	Performance Requirements for Atmospheric-type Vacuum Breakers	Table P2902.3, P2902.3.2
1002—2008	Performance Requirements for Anti-siphon Fill Valves for Water Closet Flush Tank	Table P2701.1, Table P2902.3, P2902.4.1
1003—2009	Performance Requirements for Water-pressure-reducing Valves for Domestic Water Distribution Systems	P2903.3.1
1008—2006	Performance Requirements for Plumbing Aspects of Residential Food Waste Disposer Units	Table P2701.1
1010—2004	Performance Requirements for Water Hammer Arresters	P2903.5
1011—2004	Performance Requirements for Hose Connection Vacuum Breakers	Table P2902.3, P2902.3.2
1012—2009	Performance Requirements for Backflow Preventers with Intermediate Atmospheric Vent	Table P2902.3, P2902.3.3, P2902.5.1, P2902.5.5.3
1013—2009	Performance Requirements for Reduced Pressure Principle Backflow Preventers and Reduced Pressure Principle Fire Protection Backflow Preventers	Table P2902.3, P2902.3.5, P2902.5.1, P2902.5.5.3
1015—2009	Performance Requirements for Double Check Backflow Prevention Assemblies and Double Check Fire Protection Backflow Prevention Assemblies	Table P2902.3, P2902.3.6
ASSE 1016/ASME 112.1016/ CSA B125.16—2011	Performance Requirements for Automatic Compensating Valves for Individual Showers and Tub/Shower Combinations	Table P2701.1, P2708.4, P2722.2
1017—2010	Performance Requirements for Temperature-actuated Mixing Valves for Hot Water Distribution Systems	P2724.1, P2802.1, P2803.2
1018—2010	Performance Requirements for Trap Seal Primer Valves; Potable Water Supplied	P3201.2.1, P3201.2.2
1019—2010	Performance Requirements for Freeze-resistant, Wall Hydrants, Vacuum Breaker, Draining Types	Table P2701.1, P2902.3.2
1020—2004	Performance Requirements for Pressure Vacuum Breaker Assembly	Table P2902.3, P2902.3.4
1023—2010	Performance Requirements for Hot Water Dispensers, Household-storage-type—Electrical	Table P2701.1
1024—2004	Performance Requirements for Dual Check Backflow Preventers, Anti-siphon-type, Residential Applications	Table P2902.3, P2902.3.7
1035—2008	Performance Requirements for Laboratory Faucet Backflow Preventers	Table P2902.3, P2902.3.2
1037—2010	Performance Requirements for Pressurized Flushing Devices (Flushometer) for Plumbing Fixtures	Table P2701.1
1044—2010	Performance Requirements for Trap Seal Primer Devices Drainage Types and Electronic Design Types	P3201.2.3
1047—2009	Performance Requirements for Reduced Pressure Detector Fire Protection Backflow Prevention Assemblies	Table P2902.3, P2902.3.5
1048—2009	Performance Requirements for Double Check Detector Fire Protection Backflow Prevention Assemblies	Table P2902.3, P2902.3.6
1050—2009	Performance Requirements for Stack Air Admittance Valves for Sanitary Drainage Systems	P3114.1
1051—2009	Performance Requirements for Individual and Branch-type Air Admittance Valves for Plumbing Drainage Systems	P3114.1
1052—2004	Performance Requirements for Hose Connection Backflow Preventers	Table P2701.1, Table P2902.3, P2902.3.2
1056—2010	Performance Requirements for Spill-resistant Vacuum Breakers	Table P2902.3, P2902.3.4
1060—2006	Performance Requirements for Outdoor Enclosures for Fluid-conveying Components	P2902.6.1
1061—2010	Performance Requirements for Removable and Nonremovable Push Fit Fittings	Table P2906.6
1062—2006	Performance Requirements for Temperature-actuated, Flow Reduction (TAFR) Valves for Individual Supply Fittings	Table P2701.1, P2724.2
1066—2009	Performance Requirements for Individual Pressure Balancing In-line Valves for Individual Fixture Fittings	P2722.4
1070—2004	Performance Requirements for Water-temperature-limiting Devices	P2713.3, P2721.2, P2724.1
1072—07	Performance Requirements for Barrier-type Floor Drain Trap Seal Protection Devices	P3201.2.4

ASTM

ASTM International
100 Barr Harbor Drive
West Conshohocken, PA 19428

Standard reference number	Title	Referenced in code section number
A 36/A 36M—08	Specification for Carbon Structural Steel	R606.15, R608.5.2.2
A 53/A 53M—12	Specification for Pipe, Steel, Black and Hot-dipped, Zinc-coated Welded and Seamless	R407.3, Table M2101.1, G2414.4.2, Table P2906.4, Table P2906.5, Table P3002.1(1)
A 74—13A	Specification for Cast-iron Soil Pipe and Fittings	Table P3002.1(1), Table P3002.1(2), Table P3002.2, Table P3002.3, P3005.2.6, Table P3302.1
A 106/A 106M—11	Specification for Seamless Carbon Steel Pipe for High-temperature Service	Table M2101.1, G2414.4.2
A 126—(2009)	Gray Iron Castings for Valves, Flanges and Pipe Fittings	Table P2903.9.4
A 153/A 153M—09	Specification for Zinc Coating (Hot Dip) on Iron and Steel Hardware	R317.3, Table R606.3.4.1, 703.6.3, R905.7.5, R905.8.6
A 167—99 (2009)	Specification for Stainless and Heat-resisting Chromium-nickel Steel Plate, Sheet and Strip	Table R606.3.4.1
A 240/A 240M—13A	Standard Specification for Chromium and Chromium-nickel Stainless Steel Plate, Sheet and Strip for Pressure Vessels and for General Applications	Table R905.10.3(1)
A 254—97 (2007)	Specification for Copper Brazed Steel Tubing	Table M2101.1, G2414.5.1
A 307—12	Specification for Carbon Steel Bolts and Studs, 60,000 psi Tensile Strength	R608.5.2.2
A 312/A 312M—13A	Specification for Seamless, Welded and Heavily Cold Worked Austenitic Stainless Steel Pipes	Table P2906.4, Table P2906.5, Table P2906.6, P2905.12.2
A 463/A 463M—10	Standard Specification for Steel Sheet, Aluminum-coated by the Hot-dip Process	Table R905.10.3(2)
A 539—99	Specification for Electric-resistance-welded Coiled Steel Tubing for Gas and Fuel Oil Lines	M2202.1
A 615/A 615M—12	Specification for Deformed and Plain Billet-steel Bars for Concrete Reinforcement	R402.3.1, R403.1.3.5.1, R404.1.3.3.7.1, R608.5.2.1
A 641/A 641M—09a	Specification for Zinc-coated (Galvanized) Carbon Steel Wire	Table R606.3.4.1
A 653/A 653M—11	Specification for Steel Sheet, Zinc-coated (Galvanized) or Zinc-iron Alloy-coated Galvanized) by the Hot-dip Process	R317.3.1, R505.2.2, R603.2.2, Table R606.3.4.1, R608.5.2.3, R804.2.2, R804.2.3, Table R905.10.3(1), Table R905.10.3(2), M1601.1.1
A 706/A 706M—09B	Specification for Low-alloy Steel Deformed and Plain Bars for Concrete Reinforcement	R402.3.1, R403.1.3.5.1, R404.1.3.3.7.1, R608.5.2.1
A 755/A 755M—2011	Specification for Steel Sheet, Metallic Coated by the Hot-dip Process and Prepainted by the Coil-coating Process for Exterior Exposed Building Products	Table R905.10.3(2)
A 778—01 (2009e1)	Specification for Welded Unannealed Austenitic Stainless Steel Tubular Products	Table P2905.4, Table P2905.5, Table P2905.6
A 792/A 792M—10	Specification for Steel Sheet, 55% Aluminum-zinc Alloy-coated by the Hot-dip Process	R505.2.2, R603.2.2, R608.5.2.3, R804.2.2, Table 905.10.3(2)
A 875/A 875M—13	Specification for Steel Sheet, Zinc-5%, Aluminum Alloy-coated by the Hot-dip Process	R608.5.2.3, Table R905.10.3(2)
A 888—13A	Specification for Hubless Cast Iron Soil Pipe and Fittings for Sanitary and Storm Drain, Waste and Vent Piping Application	Table P3002.1(1), Table P3002.1(2), Table P3002.2, Table P3002.3, Table P3302.1
A 924/A 924M—13	Standard Specification for General Requirements for Steel Sheet, Metallic-coated by the Hot-Dip Process	Table R905.10.3(1)
A 996/A 996M—2009b	Specifications for Rail-steel and Axle-steel Deformed Bars for Concrete Reinforcement	Table R404.1.2(9), R402.3, R403.1.3.5.1, R404.1.3.3.7.1, R608.5.2.1, Table R608.5.4(2)
A 1003/A 1003M—13A	Standard Specification for Steel Sheet, Carbon, Metallic and Nonmetallic-coated for Cold-formed Framing Members	R505.2.1, R505.2.2, R603.2.1, R603.2.2, R804.2.1
B 32—08	Specification for Solder Metal	P3003.6.3
B 42—10	Specification for Seamless Copper Pipe, Standard Sizes	Table M2101.1, Table P2906.4, Table P2906.5, Table P3002.1(1)
B 43—09	Specification for Seamless Red Brass Pipe, Standard Sizes	Table M2101.1, Table P2906.4, Table P2906.5, Table P3002.1(1)
B 75—11	Specification for Seamless Copper Tube	Table M2101.1, Table P2905.4, Table P2906.5, Table P3002.1(1), Table P3002.1(2), Table P3002.2

ASTM—continued

B 88—09	Specification for Seamless Copper Water Tube	Table M2101.1, G2414.5.2, Table, P2906.4, Table P2905.6, Table P3002.1(1), Table P3002.1(2), Table P3002.2
B 101—12	Specification for Lead-coated Copper Sheet and Strip for Building Construction	Table R905.2.8.2, Table R905.10.3(1)
B 135—10	Specification for Seamless Brass Tube	Table M2101.1
B 209—10	Specification for Aluminum and Aluminum-alloy Sheet and Plate	Table 905.10.3(1)
B 227—10	Specification for Hard-drawn Copper-clad Steel Wire	R606.15
B 251—10	Specification for General Requirements for Wrought Seamless Copper and Copper-alloy Tube	Table M2101.1, Table P2906.4, Table P2906.5, Table P3002.1(1), Table P3002.1(2), Table P3002.2
B 302—12	Specification for Threadless Copper Pipe, Standard Sizes	Table M2101.1, Table P2906.4, Table P2906.5, Table P3002.1(1)
B 306—09	Specification for Copper Drainage Tube (DWV)	Table M2101.1, Table P3002.1(1), Table P3002.1(2)
B 370—12	Specification for Copper Sheet and Strip for Building Construction	Table R905.2.8.2, Table R905.10.3(1), Table P2701.1
B 447—12a	Specification for Welded Copper Tube	Table P2906.4, Table P2906.5
B 695—04 (2009)	Standard Specification for Coatings of Zinc Mechanically Deposited on Iron and Steel	R317.3.1, R317.3.3
B 813—10	Specification for Liquid and Paste Fluxes for Soldering Applications of Copper and Copper Alloy Tube	Table M2101.1, M2103.3, P2906.14, P3003.6.3
B 828—02 (2010)	Practice for Making Capillary Joints by Soldering of Copper and Copper Alloy Tube and Fittings	M2103.3, P2906.14, P3003.6.3
C 4—2009	Specification for Clay Drain Tile and Perforated Clay Drain Tile	Table P3302.1
C 5—10	Specification for Quicklime for Structural Purposes	R702.2.1
C 14—11	Specification for Non-reinforced Concrete Sewer, Storm Drain and Culvert Pipe	Table P3002.2
C 22/C 22M—00 (2010)	Specification for Gypsum	R702.2.1, R702.3.1
C 27—98 (2008)	Specification for Standard Classification of Fireclay and High-alumina Refractory Brick	R1001.5
C 28/C 28M—10	Specification for Gypsum Plasters	R702.2.1
C 33/C 33M—13	Specification for Concrete Aggregates	R403.4.1
C 34—12	Specification for Structural Clay Load-bearing Wall Tile	Table R301.2(1), R606.2.2
C 35/C35M—1995 (2009)	Specification for Inorganic Aggregates for Use in Gypsum Plaster	R702.2.1
C 55—2011	Specification for Concrete Building Brick	R202, Table R301.2(1), R606.2.1
C 56—12	Standard Specification for Structural Clay Nonloadbearing Tile	R606.2.2
C 59/C 59M—00 (2011)	Specification for Gypsum Casting Plaster and Molding Plaster	R702.2.1
C 61/C 61M—00 (2011)	Specification for Gypsum Keene's Cement	R702.2.1
C 62—13	Standard Specification for Building Brick (Solid Masonry Units Made from Clay or Shale)	R202, Table R301.2(1), R606.2.2
C 73—10	Specification for Calcium Silicate Face Brick (Sand Lime Brick)	R202, Table R301.2(1), R606.2.1
C 76—13A	Specification for Reinforced Concrete Culvert, Storm Drain and Sewer Pipe	Table P3002.2
C 90—13	Specification for Load-bearing Concrete Masonry Units	Table R301.2(1), 606.2.1
C 91—12	Specification for Masonry Cement	R702.2.2
C 94/C 94M—13	Standard Specification for Ready-mixed Concrete	R404.1.3.3.2, R608.5.1.2
C126—13	Standard Specification for Ceramic Glazed Structural Clay Facing Tile, Facing Brick, and Solid Masonry Units	R606.2.2
C 129—11	Specification for Nonload-bearing Concrete Masonry Units	Table R301.2(1)
C 143/C 143M—12	Test Method for Slump of Hydraulic Cement Concrete	R404.1.3.3.4, R608.5.1.9
C 145—85	Specification for Solid Load-bearing Concrete Masonry Units	R202, Table R301.2(1)
C 150—12	Specification for Portland Cement	R608.5.1.1, R702.2.2
C 199—84 (2011)	Test Method for Pier Test for Refractory Mortar	R1001.5, R1001.8, R1003.12
C 203—05a (2012)	Standard Test Methods for Breaking Load and Flexural Properties of Block-type Thermal Insulation	Table R610.3.1
C 207—06 (2011)	Specification for Hydrated Lime for Masonry Purposes	Table R606.2.7
C 208—12	Specification for Cellulosic Fiber Insulating Board	R602.1.10, Table R602.3(1), Table R906.2
C 212-10	Standard Specification for Structural Clay Facing Tile	R602.2.2

ASTM—continued

C 216—13	Specification for Facing Brick (Solid Masonry Units Made from Clay or Shale)	R202, Table R301.2(1), R606.2.2
C 270—12a	Specification for Mortar for Unit Masonry	R606.2.7, R606.2.10
C 272/C 272M—12	Standard Test Method for Water Absorption of Core Materials for Sandwich Constructions	Table R610.3.1
C 273/C 273M—11	Standard Test Method for Shear Properties of Sandwich Core Materials	Table R610.3.1
C 315—07 (2011)	Specification for Clay Flue Liners and Chimney Pots	R1001.8, R1003.11.1, Table R1003.14(1), G2425.12
C 406/C 406M—2010	Specifications for Roofing Slate	R905.6.4
C 411—11	Test Method for Hot-surface Performance of High-temperature Thermal Insulation	M1601.3
C 425—04 (2009)	Specification for Compression Joints for Vitrified Clay Pipe and Fittings	Table P3002.2, P3003.10, P3003.13
C 443—12	Specification for Joints for Concrete Pipe and Manholes, Using Rubber Gaskets	P3003.5, P3003.13
C 475/C 475—12	Specification for Joint Compound and Joint Tape for Finishing Gypsum Wallboard	R702.3.1
C 476—10	Specification for Grout for Masonry	R606.2.11
C 503—10	Standard Specification for Marble Dimension Stone	R606.2.4
C 514—04 (2009)el	Specification for Nails for the Application of Gypsum Wallboard	R702.3.1
C 552—12b	Standard Specification for Cellular Glass Thermal Insulation	Table R906.2
C 557—03 (2009)e01	Specification for Adhesives for Fastening Gypsum Wallboard to Wood Framing	R702.3.1
C 564—12	Specification for Rubber Gaskets for Cast Iron Soil Pipe and Fittings	P3003.4.2, P3003.4.3, P3003.13
C 568—10	Standard Specification for Limestone Dimension Stone	R606.2.4
C 578—12b	Specification for Rigid, Cellular Polystyrene Thermal Insulation	R316.8, R403.3, R610.3.1, R703.11.2.1, Table R703.15.1, Table R703.15.2, Table R703.16.1, Table R703.16.2, Table R906.2
C 587—04(2009)	Specification for Gypsum Veneer Plaster	R702.2.1
C 595/C 595M—13	Specification for Blended Hydraulic Cements	R608.5.1.1, R702.2.2
C 615/C 615M—11	Standard Specification for Granite Dimension Stone	R606.2.4
C 616/C 615M—10	Standard Specification for Quartz Dimension Stone	R606.2.4
C 629—10	Standard Specification for Slate Dimension Stone	R606.2.4
C 631—09	Specification for Bonding Compounds for Interior Gypsum Plastering	R702.2.1
C 645—13	Specification for Nonstructural Steel Framing Members	R702.3.3
C 652—13	Specification for Hollow Brick (Hollow Masonry Units Made from Clay or Shale)	R202, Table R301.2(1), R606.2.2
C 685/C 685M—11	Specification for Concrete Made by Volumetric Batching and Continuous Mixing	R404.1.3.3.2, R608.5.1.2
C 700—13	Specification for Vitrified Clay Pipe, Extra Strength, Standard Strength and Perforated	Table P3002.2, Table P3002.3, Table P3302.1
C 728—05 (2013)	Standard Specification for Perlite Thermal Insulation Board	Table R906.2
C 744—11	Standard Specification for Prefaced Concrete and Calcium Silicate Masonry Units	R606.2.1
C 836/C 836M—12	Specification for High Solids Content, Cold Liquid-applied Elastomeric Waterproofing Membrane for Use with Separate Wearing Course	R905.15.2
C 843—99 (2012)	Specification for Application of Gypsum Veneer Plaster	R702.2.1
C 844—04 (2010)	Specification for Application of Gypsum Base to Receive Gypsum Veneer Plaster	R702.2.1
C 847—12	Specification for Metal Lath	R702.2.1, R702.2.2
C 887—05 (2010)	Specification for Packaged, Dry, Combined Materials for Surface Bonding Mortar	R406.1, R606.2.8
C 897—05 (2009)	Specification for Aggregate for Job-mixed Portland Cement-based Plasters	R702.2.2
C 920—11	Standard Specification for Elastomeric Joint Sealants	R406.4.1
C 926—13	Specification for Application of Portland Cement-based Plaster	R702.2.2, R702.2.2.1, R703.7, R703.7.2.1, R703.7.4
C 933—13	Specification for Welded Wire Lath	R702.2.1, R702.2.2
C 946—10	Standard Practice for Construction of Dry-Stacked, Surface-Bonded Walls	R606.2.8
C 954—11	Specification for Steel Drill Screws for the Application of Gypsum Panel Products or Metal Plaster Bases to Steel Studs from 0.033 in (0.84 mm) or to 0.112 in. (2.84 mm) in Thickness	R505.2.5, R603.2.5, R702.3.5.1, R804.2.5
C 955—11C	Specification for Load-bearing (Transverse and Axial) Steel Studs, Runners (Tracks), and Bracing or Bridging for Screw Application of Gypsum Panel Products and Metal Plaster Bases	R702.3.3
C 957—10	Specification for High-solids Content, Cold Liquid-applied Elastomeric Waterproofing Membrane for Use with Integral Wearing Surface	R905.15.2
C 1002—07	Specification for Steel Drill Screws for the Application of Gypsum Panel Products or Metal Plaster Bases	R702.3.1, R702.3.5.1
C 1029—13	Specification for Spray-applied Rigid Cellular Polyurethane Thermal Insulation	R905.14.2
C 1032—06 (2011)	Specification for Woven Wire Plaster Base	R702.2.1, R702.2.2

ASTM—continued

C 1047—10a	Specification for Accessories for Gypsum Wallboard and Gypsum Veneer Base . . . R702.2.1, R702.2.2, R702.3.1
C 1063—12D	Specification for Installation of Lathing and Furring to Receive Interior and Exterior Portland Cement-based Plaster . . . R702.2.2, R703.7
C 1088—13	Standard Specification for Thin Veneer Brick Units Made from Clay or Shale . . . R606.2.2
C 1107/C 1107M—13	Standard Specification for Packaged Dry, Hydraulic-cement Grout (Nonshrink) . . . R402.3.1
C 1116/C 116M—10A	Standard Specification for Fiber-reinforced Concrete and Shotcrete . . . R402.3.1
C 1157—11/C1157M—11	Standard Performance Specification for Hydraulic Cement . . . R608.5.1.1
C 1167—11	Specification for Clay Roof Tiles . . . R905.3.4
C 1173—10e1	Specification for Flexible Transition Couplings for Underground Piping Systems . . . P3003.3.1, P3003.5, P3003.6.1, P3003.10.1, P3003.12.1, P3003.12.2, P3003.13
C 1177/C 1177M—08	Specification for Glass Mat Gypsum Substrate for Use as Sheathing . . . R702.3.1, Table 906.2
C 1178/C 1178M—11	Specification for Glass Mat Water-resistant Gypsum Backing Panel . . . R702.3.1, R702.3.7, Table R702.4.2
C 1186—08 (2012)	Specification for Flat Nonasbestos Fiber Cement Sheets . . . R703.10.1, R703.10.2
C 1261—10	Specification for Firebox Brick for Residential Fireplaces . . . R1001.5, R1001.8
C 1277—12	Specification for Shielded Couplings Joining Hubless Cast Iron Soil Pipe and Fittings . . . P3003.4.3
C 1278/C 1278M—07a (2011)	Specification for Fiber-reinforced Gypsum Panels . . . R702.3.1, R702.3.7, Table R702.4.2, Table R906.2
C 1283—11	Practice for Installing Clay Flue Lining . . . R1003.9.1, R1003.12
C 1288—99 (2010)	Standard Specification for Discrete Nonasbestos Fiber-cement Interior Substrate Sheets . . . Table R503.2.1.1(1), Table R503.2.1.1(2), Table 602.3(2), Table R702.4.2
C 1289—13e1	Standard Specification for Faced Rigid Cellular Polyisocyanurate Thermal Insulation Board . . . R316.8, R703.11.2.1, Table R703.15.1, Table R703.15.2, Table R703.16.1, Table R703.16.2, Table R906.2
C 1325—08b	Standard Specification for Nonasbestos Fiber-mat Reinforced Cement Interior Substrate Sheets Backer Units . . . Table R702.4.2
C 1328/C 1328M—12	Specification for Plastic (Stucco) Cement . . . R702.2.2
C 1363—11	The Standard Test Method for Thermal Performance of Building Materials and Envelope Assemblies by Means of a Hot Box Apparatus . . . N1101.10.4.1
C 1364—10B	Standard Specification for Architectural Cast Stone . . . R606.2.5
C 1386—07	Standard Specification for Precast Autoclaved Aerated Concrete (AAC) Wall Construction Units . . . R606.2.3
C 1396/C 1396M—2013	Specification for Gypsum Board . . . Table R602.3(1), R702.2.1, R702.2.2, R702.3.1, R702.3.7
C 1405—12	Standard Specification for Glazed Brick (Single Fired, Brick Units) . . . R606.2.2
C 1440—08	Specification for Thermoplastic Elastomeric (TPE) Gasket Materials for Drain, Waste and Vent (DWV), Sewer, Sanitary and Storm Plumbing Systems . . . P3003.13
C 1460—08	Specification for Shielded Transition Couplings for Use with Dissimilar DWV Pipe and Fittings Above Ground . . . P3003.18
C 1461—08	Specification for Mechanical Couplings Using Thermoplastic Elastomeric (TPE) Gaskets for Joining Drain, Waste and Vent (DWV) Sewer, Sanitary and Storm Plumbing Systems for Above and Below Ground Use . . . P3003.13
C 1492—03 (2009)	Specification for Concrete Roof Tile . . . R905.3.5
C 1513—2013	Standard Specification for Steel Tapping Screws for Cold-formed Steel Framing Connections . . . R505.2.5, R603.2.5, R702.3.8.1, Table R703.3(2), R804.2.5 Table R703.16.1, Table R703.16.2
C 1540—11	Specification for Heavy Duty Shielded Couplings Joining Hubless Cast-iron Soil Pipe and Fittings . . . P3003.4.3
C 1634—11	Standard Specification for Concrete Facing Brick . . . R606.2.1
C 1658/C 1658M—12	Standard Specification for Glass Mat Gypsum Panels . . . R702.3.1
C 1668—12	Standard Specification for Externally Applied Reflective Insulation Systems on Rigid Duct in Heating, Ventilation, and Air Conditioning (HVAC) Systems . . . M1601.3
D 41—05	Specification for Asphalt Primer Used in Roofing, Dampproofing and Waterproofing . . . Table R905.9.2, Table R905.11.2
D 43—00 (2006)	Specification for Coal Tar Primer Used in Roofing, Dampproofing and Waterproofing . . . Table R905.9.2
D 226/D 226M—09	Specification for Asphalt-saturated (Organic Felt) Used in Roofing and Waterproofing . . . R703.2, R905.1.1, Table R905.1.1(1), R905.8.4, Table R905.9.2
D 227/D 227M—03 (2011)e1	Specification for Coal Tar Saturated (Organic Felt) Used in Roofing and Waterproofing . . . Table R905.9.2
D 312—00 (2006)	Specification for Asphalt Used in Roofing . . . Table R905.9.2
D 422—63 (2007)	Test Method for Particle-size Analysis of Soils . . . R403.1.8.1
D 449—03 (2008)	Specification for Asphalt Used in Dampproofing and Waterproofing . . . R406.2
D 450—07	Specification for Coal-tar Pitch Used in Roofing, Dampproofing and Waterproofing . . . Table R905.9.2

ASTM—continued

D 1227—95 (2007)	Specification for Emulsified Asphalt Used as a Protective Coating for Roofing . . . . . Table R905.9.2, Table R905.11.2, R905.15.2
D 1248—12	Specification for Polyethylene Plastics Extrusion Materials for Wire and Cable M1601.1.2
D 1527—99 (2005)	Specification for Acrylonitrile-butadiene-styrene (ABS) Plastic Pipe, Schedules 40 and 80. . . . . Table P2906.4
D1621—10	Standard Test Method for Compressive Properties of Rigid Cellular Plastics . . . . . Table R610.3.1
D 1622—08	Standard Test Method for Apparent Density of Rigid Cellular Plastics . . . . . Table R610.3.1
D 1623—09	Standard Test Method for Tensile and Tensile Adhesion Properties of Rigid Cellular Plastics . . . . . Table R610.3.1
D 1693—2013	Test Method for Environmental Stress-cracking of Ethylene Plastics. . . . . Table M2101.1
D 1784—11	Standard Specification for Rigid Poly (Vinyl Chloride) (PVC) Compounds and Chlorinated Poly (Vinyl Chloride) (CPVC) Compounds M1601.1.2
D 1785—12	Specification for Poly (Vinyl Chloride) (PVC) Plastic Pipe, Schedules 40, 80 and 120. . . . . Table P2906.4, Table AG101.1
D 1863/D 1863M—05 (2011)e1	Specification for Mineral Aggregate Used in Built-up Roofs. . . . . Table R905.9.2
D 1869—95 (2010)	Specification for Rubber Rings for Asbestos-cement Pipe P2906.17, P3003.13
D 1970/D 1970M—2013	Specification for Self-adhering Polymer Modified Bitumen Sheet Materials Used as Steep Roofing Underlayment for Ice Dam Protection. R905.1.1, R905.2.8.2, R905.16.4
D 2104—03	Specification for Polyethylene (PE) Plastic Pipe, Schedule 40 . . . . . Table P2905.4
D 2126—09	Standard Test Method for Response of Rigid Cellular Plastics to Thermal and Humid Aging . . . . . Table R610.3.1
D 2178—04	Specification for Asphalt Glass Felt Used in Roofing and Waterproofing . . . . . Table R905.9.2
D 2235—04 (2011)	Specification for Solvent Cement for Acrylonitrile-butadiene-styrene (ABS) Plastic Pipe and Fittings P2906.9.1.1, P3003.3.2
D 2239—12A	Specification for Polyethylene (PE) Plastic Pipe (SIDR-PR) Based on Controlled Inside Diameter . . . . . Table P2906.4, Table AG101.1
D 2241—09	Specification for Poly (Vinyl Chloride) (PVC) Pressure-rated Pipe (SDR-Series) . . . . . Table P2905.4, Table AG101.1
D 2282—99 (2005)	Specification for Acrylonitrile-butadiene-styrene (ABS) Plastic Pipe (SDR-PR). . . . . Table P2905.4
D 2412—11	Test Method for Determination of External Loading Characteristics of Plastic Pipe by Parallel-plate Loading M1601.1.2
D 2447—03	Specification for Polyethylene (PE) Plastic Pipe Schedules 40 and 80, Based on Outside Diameter . . . . . Table M2101.1
D 2464—06	Specification for Threaded Poly (Vinyl Chloride) (PVC) Plastic Pipe Fittings, Schedule 80 . . . . . Table P2906.6
D 2466—06	Specification for Poly (Vinyl Chloride) (PVC) Plastic Pipe Fittings, Schedule 40 . . . . . Table P2906.6
D 2467—06	Specification for Poly (Vinyl Chloride) (PVC) Plastic Pipe Fittings, Schedule 80 . . . . . Table P2906.6
D 2468—96a	Specification for Acrylonitrile-butadiene-styrene (ABS) Plastic Pipe Fittings, Schedule 40 . . . . . Table P2906.6
D 2513—2013e1	Specification for Thermoplastic Gas Pressure Pipe, Tubing and Fittings . . . . . Table M2101.1, G2414.6, G2414.6.1, G2414.11, G2415.17.2
D 2559—12A	Standard Specification for Adhesives for Bonded Structural Wood Products for Use Under Exterior (West Use) Exposure Conditions R610.3.3
D 2564—12	Specification for Solvent Cements for Poly (Vinyl Chloride) (PVC) Plastic Piping Systems P2906.9.1.4, P3003.8.2, P3003.9.2
D 2609—02 (2008)	Specification for Plastic Insert Fittings for Polyethylene (PE) Plastic Pipe . . . . . Table P2906.6
D 2626/ D 2626M—04 (2012)e1	Specification for Asphalt-saturated and Coated Organic Felt Base Sheet Used in Roofing . . . . . R905.3.3, Table R905.9.2
D 2657—07	Standard Practice for Heat Fusion-joining of Polyolefin Pipe Fittings M2105.11.1, P2906.3.1, P3003.12.1
D 2661—11	Specification for Acrylonitrile-butadiene-styrene (ABS) Schedule 40 Plastic Drain, Waste, and Vent Pipe and Fittings . . . . . Table P3002.1(1), Table P3002.1(2), Table P3002.2, Table P3002.3, P3003.3.2
D 2665—12	Specification for Poly (Vinyl Chloride) (PVC) Plastic Drain, Waste and Vent Pipe and Fittings . . . . . Table P3002.1(1), Table P3002.1(2), Table P3002.2, Table P3002.3, Table AG101.1
D 2672—96a (2009)	Specification for Joints for IPS PVC Pipe Using Solvent Cement . . . . . Table P2906.4
D 2683—2010e1	Specification for Socket-type Polyethylene Fittings for Outside Diameter-controlled Polyethylene Pipe and Tubing . . . . . Table M2105.5, M2105.11.1, P3010.5
D 2729—11	Specification for Poly (Vinyl Chloride) (PVC) Sewer Pipe and Fittings . . . . . P3009.11, Table P3302.1, Table AG101.1
D 2737—2012A	Specification for Polyethylene (PE) Plastic Tubing. . . . . Table P2906.4, Table AG101.1

ASTM—continued

D 2751—05	Specification for Acrylonitrile-butadiene-styrene (ABS) Sewer Pipe and Fittings	Table P3002.2, Table P3002.3
D 2822/ D 2822M—05 (2011)e1	Specification for Asphalt Roof Cement, Asbestos Containing	Table R905.9.2
D 2823/ D 2823—05 (2011)e1	Specification for Asphalt Roof Coatings, Asbestos Containing	Table R905.9.2
D 2824—06 (2012)e1	Specification for Aluminum-pigmented Asphalt Roof Coatings, Nonfibered, Asbestos Fibered and Fibered without Asbestos	Table R905.9.2, Table R905.11.2
D 2846/D 2846M—09BE1	Specification for Chlorinated Poly (Vinyl Chloride) (CPVC) Plastic Hot- and Cold-water Distribution Systems	Table M2101.1, Table P2906.4, Table P2906.5, Table P2906.6, P2906.9.1.2, P2906.9.1.3, Table AG101.1
D 2855—96 (2010)	Standard Practice for Making Solvent-cemented Joints with Poly (Vinyl Chloride) (PVC) Pipe and Fittings	P3003.9.2
D 2898—10	Test Methods for Accelerated Weathering of Fire-retardant-treated Wood for Fire Testing	R802.1.5.4, R802.1.5.8
D 2949—10	Specification for 3.25-in. Outside Diameter Poly (Vinyl Chloride) (PVC) Plastic Drain, Waste and Vent Pipe and Fittings	Table P3002.1(1), Table P3002.1(2), Table P3002.2, Table P3002.3, Table AG101.1
D 3019—08	Specification for Lap Cement Used with Asphalt Roll Roofing, Nonfibered, Asbestos Fibered and Nonasbestos Fibered	Table R905.9.2, Table R905.11.2
D 3034—08	Specification for Type PSM Poly (Vinyl Chloride) (PVC) Sewer Pipe and Fittings	Table P3002.2, Table P3002.3, Table P3202.1, Table AG101.1
D 3035—2012e1	Specification for Polyethylene (PE) Plastic Pipe (DR-PR) Based On Controlled Outside Diameter	Table M2105.4, Table AG101.1
D 3161/D 3161M—2013	Test Method for Wind Resistance of Asphalt Shingles (Fan Induced Method)	R905.2.4.1, Table R905.2.4.1, R905.16.7
D 3201—2013	Test Method for Hygroscopic Properties of Fire-retardant Wood and Wood-base Products	R802.1.5.9
D 3212—07	Specification for Joints for Drain and Sewer Plastic Pipes Using Flexible Elastomeric Seals	P3003.3.1, P3003.9.1, P3003.12.2
D 3261—12	Specification for Butt Heat Fusion Polyethylene (PE) Plastic Fittings for Polyethylene (PE) Plastic Pipe and Tubing	Table M2105.5, M2105.11.1
D 3309—96a (2002)	Specification for Polybutylene (PB) Plastic Hot- and Cold-water Distribution System	Table M2101.1
D 3311—11	Specification for Drain, Waste and Vent (DWV) Plastic Fittings Patterns	P3002.3
D 3350—2012e1	Specification for Polyethylene Plastic Pipe and Fitting Materials	Table M2101.1
D 3462/D 3462M—10A	Specification for Asphalt Shingles Made From Glass Felt and Surfaced with Mineral Granules	R905.2.4
D 3468—99 (2006)e01	Specification for Liquid-applied Neoprene and Chlorosulfanated Polyethylene Used in Roofing and Waterproofing	R905.15.2
D 3679—11	Specification for Rigid Poly (Vinyl Chloride) (PVC) Siding	R703.11
D 3737—2012	Practice for Establishing Allowable Properties for Structural Glued Laminated Timber (Glulam)	R502.1.3, R602.1.3, R802.1.2
D 3747—79 (2007)	Specification for Emulsified Asphalt Adhesive for Adhering Roof Insulation	Table R905.9.2, Table R905.11.2
D 3909/D 3909M —97b (2012)e1	Specification for Asphalt Roll Roofing (Glass Felt) Surfaced with Mineral Granules	R905.2.8.2, R905.5.4, Table R905.9.2
D 4022/D 4022M—2007 (2012)e1	Specification for Coal Tar Roof Cement, Asbestos Containing	Table R905.9.2
D 4068—09	Specification for Chlorinated Polyethylene (CPE) Sheeting for Concealed Water Containment Membrane	P2709.2, P2709.2.2
D 4318—10	Test Methods for Liquid Limit, Plastic Limit and Plasticity Index of Soils	R403.1.8.1
D 4434/D 4434M—12	Specification for Poly (Vinyl Chloride) Sheet Roofing	R905.13.2
D 4479/D 4479M—07 (2012)e1	Specification for Asphalt Roof Coatings-asbestos-free	Table R905.9.2
D 4551—12	Specification for Poly (Vinyl) Chloride (PVC) Plastic Flexible Concealed Water-containment Membrane	P2709.2, P2709.2.1
D 4586/D 4586M—07 (2012)e1	Specification for Asphalt Roof Cement-asbestos-free	Table R905.9.2
D 4601/D 4601M—04 (2012)e1	Specification for Asphalt-coated Glass Fiber Base Sheet Used in Roofing	Table R905.9.2
D 4637/D 4637M—2013	Specification for EPDM Sheet Used in Single-ply Roof Membrane	R905.12.2
D 4829—11	Test Method for Expansion Index of Soils	R403.1.8.1
D 4869/D 4869M—05 (2011)e01	Specification for Asphalt-saturated (Organic Felt) Underlayment Used in Steep Slope Roofing	R905.1.1, Table R905.1.1(1), R905.16.3, R905.16.4.2

ASTM—continued

D 4897/ D 4897M—01 (2009)	Specification for Asphalt Coated Glass-fiber Venting Base Sheet Used in Roofing . . . . . Table R905.9.2
D 4990—97a (2005)e01	Specification for Coal Tar Glass Felt Used in Roofing and Waterproofing . . . . . Table R905.9.2
D 5019—07a	Specification for Reinforced Nonvulcanized Polymeric Sheet Used in Roofing Membrane R905.12.2
D 5055—2013	Specification for Establishing and Monitoring Structural Capacities of Prefabricated Wood I-joists R502.1.2
D 5456—2013	Standard Specification for Evaluation of Structural Composite Lumber Products R502.1.5, R602.1.5, R802.1.7
D 5516—09	Test Method for Evaluating the Flexural Properties of Fire-retardant-treated Softwood Plywood Exposed to the Elevated Temperatures R802.1.5.7
D 5643/D 5643M—06 (2012)e1	Specification for Coal Tar Roof Cement Asbestos-free . . . . . Table R905.9.2
D 5664—10	Test Methods For Evaluating the Effects of Fire-retardant Treatments and Elevated Temperatures on Strength Properties of Fire-retardant-treated Lumber R802.1.5.7
D 5665—99a (2006)	Specification for Thermoplastic Fabrics Used in Cold-applied Roofing and Waterproofing . . . . . Table R905.9.2
D 5726—98 (2005)	Specification for Thermoplastic Fabrics Used in Hot-applied Roofing and Waterproofing . . . . . Table R905.9.2
D 6083—05e01	Specification for Liquid-applied Acrylic Coating Used in Roofing . . . . . Table R905.9.2, Table R905.11.2, Table R905.14.3, R905.15.2
D 6162—2000a (2008)	Specification for Styrene Butadiene Styrene (SBS) Modified Bituminous Sheet Materials Using a Combination of Polyester and Glass Fiber Reinforcements . . . . . Table R905.11.2
D 6163—00 (2008)	Specification for Styrene Butadiene Styrene (SBS) Modified Bituminous Sheet Materials Using Glass Fiber Reinforcements . . . . . Table R905.11.2
D 6164/D 6164M—11	Specification for Styrene Butadiene Styrene (SBS) Modified Bituminous Sheet Materials Using Polyester Reinforcements . . . . . Table R905.11.2
D 6222/D 6222M—11	Specification for Atactic Polypropylene (APP) Modified Bituminous Sheet Materials Using Polyester Reinforcements . . . . . Table R905.11.2
D 6223/D 6223M—02 (2011)e1	Specification for Atactic Polypropylene (APP) Modified Bituminous Sheet Materials Using a Combination of Polyester and Glass Fiber Reinforcement . . . . . Table R905.11.2
D 6298—05e1	Specification for Fiberglass-reinforced Styrene Butadiene Styrene (SBS) Modified Bituminous Sheets with a Factory Applied Metal Surface . . . . . Table R905.11.2
D 6305—08	Practice for Calculating Bending Strength Design Adjustment Factors for Fire-retardant-treated Plywood Roof Sheathing R802.1.5.6
D 6380—03 (2009)	Standard Specification for Asphalt Roll Roofing (Organic Felt). . . . . Table R905.1.1(1), R905.2.8.2, R905.5.4
D 6694—08	Standard Specification for Liquid-applied Silicone Coating Used in Spray Polyurethane Foam Roofing Systems . . . . . Table R905.14.3, R905.15.2
D 6754/D 6745M—10	Standard Specification for Ketone-ethylene-ester-based Sheet Roofing R905.13.2
D 6757—2013	Standard Specification for Inorganic Underlayment for Use with Steep Slope Roofing Products . . . . . Table R905.1.1(1), R905.1.1, R905.16.3, R905.16.4.2
D 6841—08	Standard Practice for Calculating Design Value Treatment Adjustment Factors for Fire-retardant-treated Lumber R802.1.5.7
D 6878/D 6878—11a	Standard Specification for Thermoplastic-polyolefin-based Sheet Roofing R905.13.2
D 6947—07	Standard Specification for Liquid Applied Moisture Cured Polyurethane Coating Used in Spray Polyurethane Foam Roofing System . . . . . Table R905.14.3, R905.15.2
D 7032—10a	Standard Specification for Establishing Performance Ratings for Wood-plastic Composite Deck Boards and Guardrail Systems (Guards or Handrails) . . . R507.3, R507.3.1, 507.3.4, 507.3.4
D 7158—D 7158M—2011	Standard Test Method for Wind Resistance of Sealed Asphalt Shingles (Uplift Force/Uplift Resistance Method) . . . . . R905.2.4.1, Table R905.2.4.1
D 7254—07	Standard Specification for Polypropylene (PP) siding. . . . . Table R703.3(1), R703.14
D 7425/D 7425M—11	Standard Specification for Spray Polyurethane Foam Used for Roofing Application R905.14.2
D 7672—2012	Standard Specification for Evaluating Structural Capacities of Rim Board Products and Assemblies. R502.1.7, R602.1.7, R802.1.7
D 7793—13	Standard Specification for Insulated Vinyl Siding. . . . . R703.13, Table R703.3(1)
E 84—2013a	Test Method for Surface Burning Characteristics of Building Materials R202, R302.9.3, R302.9.4, R302.10.1, R302.10.2, R316.3, R316.5.9, R316.5.11, R507.3.2, R802.1.5, M1601.3, M1601.5.2
E 96/E 96M—2013	Test Method for Water Vapor Transmission of Materials. . . . . R202, Table R610.3.1, M1411.6 M1601.4.6
E 108—2011	Test Methods for Fire Tests of Roof Coverings. R302.2.2, R902.1
E 119—2012a	Test Methods for Fire Tests of Building Construction and Materials . . . . . Table R302.1(1), Table R302.1(2), R302.2, R302.2.2, R302.3, R302.4.1, R302.11.1

ASTM—continued

E 136—2012	Test Method for Behavior of Materials in a Vertical Tube Furnace at 750°C	R202, R302.11
E 283—04	Test Method for Determining the Rate of Air Leakage Through Exterior Windows, Curtain Walls and Doors Under Specified Pressure Differences Across the Specimen	N1102.4.5
E 330—02	Test Method for Structural Performance of Exterior Windows, Curtain Walls and Doors by Uniform Static Air Pressure Difference	R609.4, R609.5, R612.4, R703.1.2
E 331—00 (2009)	Test Method for Water Penetration of Exterior Windows, Skylights, Doors and Curtain Walls by Uniform Static Air Pressure Difference	R703.1.1
E 779—10	Standard Test Method for Determining Air Leakage Rate by Fan Pressurization	N1102.4.1.2
E 814—2013	Test Method for Fire Tests of Through-penetration Firestops	R302.4.1.2
E 970—2010	Test Method for Critical Radiant Flux of Exposed Attic Floor Insulation Using a Radiant Heat Energy Source	R302.10.5
E 1509—12	Standard Specification for Room Heaters, Pellet Fuel-burning Type	M1410.1
E 1602—03 (2010)e1	Guide for Construction of Solid Fuel Burning Masonry Heaters	R1002.2
E 1827—11	Standard Test Methods for Determining Airtightness of Building Using an Orifice Blower Door	N1102.4.1.2
E 1886—05	Test Method for Performance of Exterior Windows, Curtain Walls, Doors and Storm Shutters Impacted by Missile(s) and Exposed to Cyclic Pressure Differentials	R301.2.1.2, R609.6.1
E 1996—2012a	Standard Specification for Performance of Exterior Windows, Curtain Walls, Doors and Impact Protective Systems Impacted by Windborne Debris in Hurricanes	R301.2.1.2, R301.2.1.2.1, R609.6.1
E 2178—2013	Standard Test Method for Air Permeance of Building Materials	R202
E 2231—09	Standard Practice for Specimen Preparation and Mounting of Pipe and Duct Insulation Materials to Assess Surface Burning Characteristics	M1601.3
E 2273—03 (2011)	Standard Test Method for Determining the Drainage Efficiency of Exterior Insulation and Finish Systems (EIFS) Clad Wall Assemblies	R703.9.2
E 2568—09e1	Standard Specification for PB Exterior Insulation and Finish Systems	R703.9.1, R703.9.2
E 2570—07	Standard Test Methods for Evaluating Water-resistive Barrier (WRB) Coatings Used Under Exterior Insulation and Finish Systems (EIFS) or EIFS with Drainage	R703.9.2
E 2634—11	Standard Specification for Flat Wall Insulating Concrete Form (ICF) Systems	R404.1.3.3.6.1, R608.4.4
F 405—05	Specification for Corrugated Polyethylene (PE) Pipe and Fittings	Table P3009.11, Table P3302.1, Table AG101.1
F 409—12	Specification for Thermoplastic Accessible and Replaceable Plastic Tube and Tubular Fittings	Table P2701.1, P2702.2, P2702.3
F 437—09	Specification for Threaded Chlorinated Poly (Vinyl Chloride) (CPVC) Plastic Pipe Fittings, Schedule 80	Table P2906.6
F 438—09	Specification for Socket-type Chlorinated Poly (Vinyl Chloride) (CPVC) Plastic Pipe Fittings, Schedule 40	Table P2906.6
F 439—12	Specification for Chlorinated Poly (Vinyl Chloride) (CPVC) Plastic Pipe Fittings, Schedule 80	Table P2906.6
F 441/F 441M—13	Specification for Chlorinated Poly (Vinyl Chloride) (CPVC) Plastic Pipe, Schedules 40 and 80	Table P2906.4, Table P2906.5, Table AG101.1
F 442/F 442M—13	Specification for Chlorinated Poly (Vinyl Chloride) (CPVC) Plastic Pipe (SDR-PR)	Table P2906.4, Table P2906.5, Table AG101.1
F 477—10	Specification for Elastomeric Seals (Gaskets) for Joining Plastic Pipe	P2906.17, P3003.13
F 493—10	Specification for Solvent Cements for Chlorinated Poly (Vinyl Chloride) (CPVC) Plastic Pipe and Fittings	P2906.9.1.2, P2906.9.1.3
F 628—08	Specification for Acrylonitrile-butadiene-styrene (ABS) Schedule 40 Plastic Drain, Waste and Vent Pipe with a Cellular Core	Table P3002.1(1), Table P3002.1(2), Table P3002.2, Table P3002.3, P3003.3.2, Table AG101.1
F 656—10	Specification for Primers for Use in Solvent Cement Joints of Poly (Vinyl Chloride) (PVC) Plastic Pipe and Fittings	P2906.9.1.4, P3003.9.2
F 714—13	Specification for Polyethylene (PE) Plastic Pipe (SDR-PR) Based on Outside Diameter	Table P3002.2, P3010.4
F 876—13	Specification for Cross-linked Polyethylene (PEX) Tubing	Table M2101.1, Table P2906.4, Table P2906.5, Table AG101.1
F 877—11A	Specification for Cross-linked Polyethylene (PEX) Plastic Hot- and Cold-water Distribution Systems	Table M2101.1, Table P2906.4, Table P2906.5, Table P2906.6
F 891—10	Specification for Coextruded Poly (Vinyl Chloride) (PVC) Plastic Pipe with a Cellular Core	Table P3002.1(1), Table P3002.1(2), Table P3002.2, Table P3302.1, Table AG101.1
F 1055—13	Specification for Electrofusion Type Polyethylene Fittings for Outside Diameter Controlled Polyethylene and Crosslinked Polyethylene Pipe and Tubing	Table M2105.5, M2105.11.2

3226

ASTM—continued

F 1281—11	Specification for Cross-linked Polyethylene/Aluminum/Cross-linked Polyethylene (PEX-AL-PEX) Pressure Pipe . . . . . Table M2101.1, Table P2906.4, Table P2906.5, Table P2906.6, P2506.11.1, Table AG101.1
F 1282—10	Specification for Polyethylene/Aluminum/Polyethylene (PE-AL-PE) Composite Pressure Pipe . . . . . Table M2101.1, Table P2906.4, Table P2906.5, Table P2906.6, P2906.11.1, Table AG101.1
F 1412—09	Specification for Polyolefin Pipe and Fittings for Corrosive Waste Drainage . . . . . Table P3002.1(2), Table P3002.2, Table P3002.3, P3003.11.1
F 1488—09e1	Specification for Coextruded Composite Pipe . . . . . Table P3002.1(1), Table P3002.1(2), Table P3002.2, Table P3009.11
F 1554—07a	Specification for Anchor Bolts, Steel, 36, 55 and 105-ksi Yield Strength R608.5.2.2
F 1667—11A e1	Specification for Driven Fasteners, Nails, Spikes and Staples . . . . . R317.3, R703.3.2, R703.6.3, Table R703.15.1, Table R703.15.2, R905.2.5
F 1807—13	Specification for Metal Insert Fittings Utilizing a Copper Crimp Ring for SDR9 Cross-linked Polyethylene (PEX) Tubing and SDR9 Polyethylene of Raised Temperature (PE-RT) Tubing . . . . . Table M2101.1, Table P2906.6
F 1866—07	Specification for Poly (Vinyl Chloride) (PVC) Plastic Schedule 40 Drainage and DWV Fabricated Fittings . . . . . Table P3002.3
F 1924—12	Standard Specification for Plastic Mechanical Fittings for Use on Outside Diameter Controlled Polyethylene Gas Distribution Pipe and Tubing M2105.11.1
F 1960—12	Specification for Cold Expansion Fittings with PEX Reinforcing Rings for Use with Cross-linked Polyethylene (PEX) Tubing . . . . . Table M2101.1, Table P2906.6
F 1970—12	Standard Specification for Special Engineered Fittings, Appurtenances or Valves for Use in Poly (Vinyl Chloride) (PVC) or Chlorinated Poly (Vinyl Chloride) (CPVC) Systems . . . . . M2105.5, Table 2903.9.4
F 1973—08	Standard Specification for Factory Assembled Anodeless Risers and Transition Fittings in Polyethylene (PE) and Polyamide 11 (PA 11) Fuel Gas Distribution Systems G2415.15.2
F 1974—09	Specification for Metal Insert Fittings for Polyethylene/Aluminum/Polyethylene and Cross-linked Polyethylene/Aluminum/Cross-linked Polyethylene Composite Pressure Pipe . . . . . P2506.11.1, Table P2906.6
F 1986—01 (2011)	Multilayer Pipe Type 2, Compression Joints for Hot and Cold Drinking Water Systems . . . . . Table P2906.4, Table P2906.5, Table P2906.6
F 2080—12	Specification for Cold-expansion Fittings with Metal Compression-sleeves for Cross-linked Polyethylene (PEX) Pipe P2906.6
F 2090—10	Specification for Window Fall Prevention Devices—with Emergency Escape (Egress) Release Mechanisms R310.1.1, R312.2.1, R312.2.2, R612.2, R612.3
F 2098—08	Standard Specification for Stainless Steel Clamps for Securing SDR9 Cross-linked Polyethylene (PEX) Tubing to Metal Insert and Plastic Insert Fittings . . . . . Table M2101.1, Table P2906.6
F 2159—11	Standard Specification for Plastic Insert Fittings Utilizing a Copper Crimp Ring for SDR9 Cross-linked Polyethylene (PEX) Tubing and SDR9 Polyethylene of Raised Temperature (PE-RT) Tubing . . . . . Table P2906.6
F 2262—09	Standard Specification for Cross-linked Polyethylene/Aluminum/Cross-linked Polyethylene Tubing OD Controlled SDR9 . . . . . Table P2906.4, Table P2906.5
F 2389—10	Standard for Pressure-rated Polypropylene (PP) Piping Systems . . . . . Table M2105.12.1, Table P2906.4, Table P2906.5, Table P2906.6, P2906.10.1, Table AG101.1
F 2434—09	Standard Specification for Metal Insert Fittings Utilizing a Copper Crimp Ring for Polyethylene/Aluminum/Cross-linked Polyethylene (PEX-AL-PEX) Tubing . . . . . Table P2906.6
F 2623—08	Standard Specification for Polyethylene of Raised Temperature (PE-RT) SDRG Tubing . . . . . Table M2101.1, Table AG101.1
F 2735—09	Standard Specification for Plastic Insert Fittings for SDR9 Cross-linked Polyethylene (PEX) and Polyethylene of Raised Temperature (PE-RT) Tubing . . . . . Table M2101.1, Table P2906.6
F 2769—10	Polyethylene or Raised Temperature (PE-RT) Plastic Hot and Cold-Water Tubing and Distribution Systems . . . . . Table M2101.1, Table P2906.4, Table P2906.5, Table P2906.6, Table AG101.1
F 2806—10	Standard Specification for Acrylonitrile-butadiene-styrene (ABS) Plastic Pipe (Metric SDR-PR) . . . . . Table M2101.1
F 2855—12	Standard Specification for Chlorinated Poly (Vinyl Chloride)/ Aluminum/Chlorinated Poly (Vinyl Chloride) (CPVC AL CPVC) Composite Pressure Tubing . . . . . Table P2906.4, Table P2906.5, Table AG101.1
F 2969—12	Standard Specification for Acrylonitrile-butadiene-styrene (ABS) IPS Dimensioned Pressure Pipe . . . . . Table M2101.1

AWC

American Wood Council
222 Catocin Circle, Suite 201
Leesburg, VA 20175

Standard reference number	Title	Referenced in code section number
AWC STJR—2015	Span Tables for Joists and Rafters	R502.3, R802.4, R802.5
AWC WFCM—2015	Wood Frame Construction Manual for One- and Two-family Dwellings	R301.1.1, R301.2.1.1, R602.10.8.2, R608.9.2, Figure R608.9(9), R608.10
ANSI AWC NDS—2015	National Design Specification (NDS) for Wood Construction—with 2005 Supplement	R404.2.2, R502.2, Table R503.1, R602.3, R608.9.2, Table R703.15.1, Table R703.15.2, R802.2
AWC PWF—2015	Permanent Wood Foundation Design Specification	R317.3.2, R401.1, R404.2.3

AWPA

American Wood Protection Association
P.O. Box 361784
Birmingham, AL 35236-1784

Standard reference number	Title	Referenced in code section number
C1—03	All Timber Products—Preservative Treatment by Pressure Processes	R902.2
M4—11	Standard for the Care of Preservative-treated Wood Products	R317.1.1, R318.1.2
U1—14	USE CATEGORY SYSTEM: User Specification for Treated Wood Except Section 6 Commodity Specification H	R317.1, R402.1.2, R504.3, R703.6.3, R905.7.5, Table R905.8.5, R905.8.6

AWS

American Welding Society
8669 NW 36 Street, #130
Doral, FL 33166

Standard reference number	Title	Referenced in code section number
A5.8M/A5.8—2011	Specifications for Filler Metals for Brazing and Braze Welding	P3003.6.1
ANSI/AWS A5.31M/A5.31—2012	Specification for Fluxes for Brazing and Braze Welding Edition: 2nd	M2103.3, M2202.2, P2906.14, M2103.3

AWWA

American Water Works Association
6666 West Quincy Avenue
Denver, CO 80235

Standard reference number	Title	Referenced in code section number
C104/A21.4—08	Cement-mortar Lining for Ductile-iron Pipe and Fittings for Water	P2906.4
C110/A21.10—12	Ductile-iron and Gray-iron Fittings	Table P2906.6,
C115/A21.15—11	Flanged Ductile-iron Pipe with Ductile-iron or Gray-iron Threaded Flanges	Table P2906.4
C151/A21.51—09	Ductile-iron Pipe, Centrifugally Cast, for Water	Table P2906.4
C153/A21.53—11	Ductile-iron Compact Fittings for Water Service	Table P2906.6
C500—09	Standard for Metal-seated Gate Valves for Water Supply Service	Table P2903.9.4
C504—10	Standard for Rubber-seated Butterfly Valves	Table P2903.9.4
C507—11	Standard for Ball Valves, 6 In. Through 60 In.	Table P2903.9.4
C510—07	Double Check Valve Backflow Prevention Assembly	Table P2902.3, P2902.3.6
C511—07	Reduced-pressure Principle Backflow Prevention Assembly	Table P2902.3, P2902.3.5, P2902.5.1

AWWA—continued

C901—08	Polyethylene (PE) Pressure Pipe and Tubing $^1/_2$ in. (13 mm) through 3 in. (76 mm) for Water Service	P2906.4, Table AG101.1
C903—05	Polyethylene-aluminum-polyethylene & Crosslinked Polyethylene Composite Pressure Pipe, $^1/_2$ in. (12 mm) through 2 in. (50 mm), for Water Service	Table M2101
C904—06	Cross-linked Polyethylene (PEX) Pressure Pipe, $^1/_2$ in. (12 mm) through 3 in. (76 mm) for Water Service	P2906.4, Table AG101.1

CEN

European Committee for Standardization (EN)
Central Secretariat
Rue de Stassart 36
B-10 50 Brussels

Standard reference number	Title	Referenced in code section number
EN 15250-2007	Slow Heat Release Appliances Fired by Solid Fuel Requirements and Test Methods	R1002.5

CGSB

Canadian General Standards Board
Place du Portage 111, 6B1
11 Laurier Street
Gatineau, Quebec, Canada KIA 1G6

Standard reference number	Title	Referenced in code section number
CAN/CGSB-37.54—95	Polyvinyl Chloride Roofing and Waterproofing Membrane	R905.13.2
37-GP-52M—(1984)	Roofing and Waterproofing Membrane, Sheet Applied, Elastomeric	R905.12.2
37-GP-56M—(1980)	Membrane, Modified Bituminous, Prefabricated and Reinforced for Roofing—with December 1985 Amendment	Table R905.11.2

CISPI

Cast Iron Soil Pipe Institute
5959 Shallowford Road, Suite 419
Chattanooga, TN 37421

Standard reference number	Title	Referenced in code section number
301—04a	Standard Specification for Hubless Cast Iron Soil Pipe and Fittings for Sanitary and Storm Drain, Waste and Vent Piping Applications	Table P3002.1(1), Table P3002.1(2), Table P3002.2, Table P3002.3, Table P3302.1
310—04	Standard Specification for Coupling for Use in Connection with Hubless Cast Iron Soil Pipe and Fittings for Sanitary and Storm Drain, Waste and Vent Piping Applications	P3003.4.3

CPA

Composite Panel Association
19465 Deerfield Avenue, Suite 306
Leesburg, VA 20176

Standard reference number	Title	Referenced in code section number
ANSI A135.4—2012	Basic Hardboard	Table R602.3(2)
ANSI A135.5—2012	Prefinished Hardboard Paneling	R702.5
ANSI A135.6—2012	Engineered Wood Siding	R703.5
ANSI A135.7—2012	Engineered Wood Trim	R703.5
A208.1—2009	Particleboard	R503.3.1, R602.1.9, R605.1

CPSC

Consumer Product Safety Commission
4330 East West Highway
Bethesda, MD 20814-4408

Standard reference number	Title	Referenced in code section number
16 CFR, Part 1201—(2002)	Safety Standard for Architectural Glazing	R308.1.1, R308.3.1, Table R308.3.1(1)
16 CFR, Part 1209—(2002)	Interim Safety Standard for Cellulose Insulation	R302.10.3
16 CFR, Part 1404—(2002)	Cellulose Insulation	R302.10.3

CSA

CSA Group
8501 East Pleasant Valley Road
Cleveland, OH 44131-5516

Standard reference number	Title	Referenced in code section number
AAMA/WDMA/CSA 101/I.S.2/A440—11	North American Fenestration Standard/Specification for Windows, Doors and Unit Skylights	R308.6.9, R609.3, N1102.4.3
ANSI/CSA America FCI—2012	Stationary Fuel Cell Power Systems	M1903.1
ASME A112.3.4—2013/ CSA B45.9—13	Macerating Toilet Systems and Related Components	Table P2701.1, P3007.5
ASME A112.18.1—2012/ CSA B125.1—2012	Plumbing Supply Fittings	Table P2701.1, P2708.4, P2708.5, P2722.1, P2722.2, P2722.3, P2902.2, Table P2903.9.4
ASME A112.18.2—2011/ CSA B125.2—2011	Plumbing Waste Fittings	Table P2701.1, P2702.2
A112.18.6/ CSA B125.6—2009	Flexible Water Connectors	P2906.7
ASME A112.19.1—2013/ CSA B45.2—13	Enameled Cast-iron and Enameled Steel Plumbing Fixtures	Table 2701.1, P2711.1
ASME A112.19.2—2013/ CSA B45.1—13	Ceramic Plumbing Fixtures	Table P2701.1, P2705.1, P2711.1, P2712.1, P2712.2, P2712.9
ASME A112.19.3—2008/ CSA B45.4—08 (R2013)	Stainless Steel Plumbing Fixtures	Table P2701.1, P2705.1, P2711.1, P2712.1
ASSE 1016/ASME 112.1016/ CSA B125.16—2011	Performance Requirements for Automatic Compensating Valves for Individual Showers and Tub/Shower Combinations	Table P2701.1, P2708.4, P2722.2
A112.19.5—2011/ CSA B45.15—2011	Flush Valves and Spuds for Water-closets, Urinals and Tanks	Table P2701.1
A112.19.7—2012/ CSA B45.10—2012	Hydromassage Bathtub Systems	Table P2701.1
ASME A17.1/ CSA B44—2013	Safety Code for Elevators and Escalators	R321.1
CSA 8—93	Requirements for Gas Fired Log Lighters for Wood Burning Fireplaces—with revisions through January 1999	G2433.1
A257.1M—2009	Circular Concrete Culvert, Storm Drain, Sewer Pipe and Fittings	Table P3002.2
A257.2M—2009	Reinforced Circular Concrete Culvert, Storm Drain, Sewer Pipe and Fittings	Table P3002.2, P3003.13
A257.3M—2009	Joints for Circular Concrete Sewer and Culvert Pipe, Manhole Sections and Fittings Using Rubber Gaskets	P3003.5, P3003.18
B64.1.1—11	Vacuum Breakers, Atmospheric Type (AVB)	Table P2902.3, P2902.3.2
B64.1.2—11	Pressure Vacuum Breakers (PVB)	Table P2902.3, P2902.3.4
B64.1.3—11	Spill Resistant Pressure Vacuum Breakers (SRPVB)	P2902.3.2
B64.2—11	Vacuum Breakers, Hose Connection Type (HCVP)	Table P2902.3, P2902.3.2
B64.2.1—11	Hose Connection Vacuum Breakers (HCVB) with Manual Draining Feature	Table P2902.3, P2902.3.2
B64.2.1.1—11	Hose Connection Dual Check Vacuum Breakers (HCDVB)	Table P2902.3, P2902.3.2
B64.2.2—11	Vacuum Breakers, Hose Connection Type (HCVP) with Automatic Draining Feature	Table P2902.3, P2902.3.2
B64.3—11	Dual Check Backflow Preventers with Atmospheric Port (DCAP)	Table P2902.3, P2902.5.1

CSA—continued

B64.4—11	Backflow Preventers, Reduced Pressure Principle Type (RP)	Table P2902.3, P2902.3.5, P2903.5.1
B64.4.1—11	Reduced Pressure Principle for Fire Sprinklers (RPF)	Table P2902.3, P2902.3.5
B64.5—11	Double Check Backflow Preventers (DCVA)	Table P2902.3, P2902.3.6
B64.5.1—11	Double Check Valve Backflow Preventers, Type for Fire Systems (DCVAF)	Table P2902.3, P2902.3.6
B64.6—11	Dual Check Valve Backflow Preventers (DuC)	Table P2902.3, P2902.3.7
B64.7—11	Laboratory Faucet Vacuum Breakers (LFVB)	Table P2902.3, P2902.3.2
B125.3—12	Plumbing Fittings	Table 2701.1, P2713.3, P2721.2, Table P2902.3, P2902.4.1, Table P2903.9.4
B137.1—13	Polyethylene (PE) Pipe, Tubing and Fittings for Cold Water Pressure Services	Table P2906.4, Table P2906.6
B137.2—13	Polyvinylchloride PVC Injection-moulded Gasketed Fittings for Pressure Applications	Table P2906.6
B137.3—13	Rigid Poly (Vinyl Chloride) (PVC) Pipe for Pressure Applications	Table P2906.4, Table 2906.6, P3003.9.2, Table AG101.1
B137.5—13	Cross-linked Polyethylene (PEX) Tubing Systems for Pressure Applications	Table P2906.4, Table P2906.5, Table P2906.6, Table AG101.1
B137.6—13	Chlorinated polyvinylchloride CPVC Pipe, Tubing and Fittings For Hot- and Cold-water Distribution Systems	Table P2906.4, Table P2906.5, Table 2906.6, Table AG101.1
B137.9—13	Polyethylene/Aluminum/Polyethylene (PE-AL-PE) Composite Pressure Pipe Systems	Table M2101.1, P2506.11.1, Table P2906.4
B137.10—13	Cross-linked Polyethylene/Aluminum/Cross-linked Polyethylene (PE-AL-PE) Composite Pressure Pipe Systems	Table M2101.1, Table P2906.4, Table P2906.5, Table P2906.6, P2906.11.1
B137.11—13	Polypropylene (PP-R) Pipe and Fittings for Pressure Applications	Table P2906.4, Table 2906.5, Table P2906.6, Table AG101.1
B181.1—11	Acrylonitrile-butadiene-styrene (ABS) Drain, Waste and Vent Pipe and Pipe Fittings	Table P3002.1(1), Table P3002.1(2), Table P3002.3, P3003.3.2, P3003.8.2
B181.2—11	Polyvinylchloride (PVC) and chlorinated polyvinylchloride (CPVC) Drain, Waste and Vent Pipe and Pipe Fittings	Table P3002.1(1), Table P3002.1(2), P3003.9.2, P3003.14.2,P3008.2, Table P3302.1
B181.3—11	Polyolefin and polyvinylidene (PVDF) Laboratory Drainage Systems	Table P3002.1(1), Table P3002.1(2), Table P3002.2, Table P3002.3, P3003.11.1
B182.2—11	PSM Type polyvinylchloride (PVC) Sewer Pipe and Fittings	Table P3002.2, Table P3002.3, Table P3302.1
B182.4—11	Profile polyvinylchloride (PVC) Sewer Pipe & Fittings	Table P3002.2, Table P3002.3, Table P3302.1
B182.6—11	Profile Polyethylene (PE) Sewer Pipe and Fittings for leak-proof Sewer Applications	Table P3302.1
B182.8—11	Profile Polyethylene (PE) Storm Sewer and Drainage Pipe and Fittings	Table P3302.1
B356—10	Water Pressure Reducing Valves for Domestic Water Supply Systems	P2903.3.1
B483.1—14	Drinking Water Treatment Systems	P2909.1, P2909.2
B602—10	Mechanical Couplings for Drain, Waste and Vent Pipe and Sewer Pipe	P3003.3.1, P3003.4.3,P3003.5, P3003.9.1, P3003.10.1, P3003.12.2, P3003.13
CSA B45.5—11/ IAPMO Z124—11	Plastic Plumbing Fixtures	Table P2701.1, P2711.1, P2711.2, P2712.1
CSA C448 Series-02-CAN/CSA—2002	Design and Installation of Earth Energy Systems—First Edition; Update 2: October 2009; Consolidated Reprint 10/2009	Table M2105.4, Table M2105.5
O325—07	Construction Sheathing	R503.2.1, R602.1.8, R604.1, R803.2.1
O437-Series—93	Standards on OSB and Waferboard (Reaffirmed 2006)	R503.2.1, R602.1.8, R604.1, R803.2.1
UL/CSA/ANCE 60335-2-40—2012	Standard for Household and Similar Electrical Appliances, Part 2: Particular Requirements for Motor-compressors	M1403.1, M1412.1, M1413.1

CSSB

Cedar Shake & Shingle Bureau
P. O. Box 1178
Sumas, WA 98295-1178

Standard reference number	Title	Referenced in code section number
CSSB—97	Grading and Packing Rules for Western Red Cedar Shakes and Western Red Shingles of the Cedar Shake and Shingle Bureau	R702.6, R703.6, Table R905.7.4, Table R905.8.5

DASMA

Door and Access Systems Manufacturers Association International
1300 Summer Avenue
Cleveland, OH 44115-2851

Standard reference number	Title	Referenced in code section number
108—12	Standard Method for Testing Garage Doors: Determination of Structural Performance Under Uniform Static Air Pressure Difference	R609.14
115—12	Standard Method for Testing Garage Doors: Determination of Structural Performance Under Missile Impact and Cyclic Wind Pressure	R301.2.1.2

DOC

United States Department of Commerce
1401 Constitution Avenue, NW
Washington, DC 20230

Standard reference number	Title	Referenced in code section number
PS 1—09	Structural Plywood	R404.2.1, Table R404.2.3, R503.2.1, R602.1.8, R604.1, R610.3.2, R803.2.1
PS 2—10	Performance Standard for Wood-based Structural-use Panels	R404.2.1, Table R404.2.3, R503.2.1, R602.1.8, R604.1, R610.3.2, Table 610.3.2, R803.2.1
PS 20—05	American Softwood Lumber Standard	R404.2.1, R502.1.1, R602.1.1, R802.1.1

DOTn

Department of Transportation
1200 New Jersey Avenue SE
East Building, 2nd floor
Washington, DC 20590

Standard reference number	Title	Referenced in code section number
49 CFR, Parts 192.281(e) & 192.283 (b) (2009)	Transportation of Natural and Other Gas by Pipeline: Minimum Federal Safety Standards	G2414.6.1

FEMA

Federal Emergency Management Agency
500 C Street, SW
Washington, DC 20472

Standard reference number	Title	Referenced in code section number
FEMA TB-2—08	Flood Damage-resistant Materials Requirements	R322.1.8
FEMA TB-11—01	Crawlspace Construction for Buildings Located in Special Flood Hazard Area	R408.7

FM

Factory Mutual Global Research
Standards Laboratories Department
1301 Atwood Avenue, P. O. Box 7500
Johnson, RI 02919

Standard reference number	Title	Referenced in code section number
4450—(1989)	Approval Standard for Class 1 Insulated Steel Deck Roofs—with Supplements through July 1992	R906.1
4880—(2010)	American National Standard for Evaluating Insulated Wall or Wall and Roof/Ceiling Assemblies, Plastic Interior Finish Materials, Plastic Exterior Building Panels, Wall/Ceiling Coating Systems, Interior and Exterior Finish Systems	R316.6

GA

Gypsum Association
6525 Belcrest Road, Suite 480
Hyattsville, MD 20782

Standard reference number	Title	Referenced in code section number
GA-253—12	Application of Gypsum Sheathing	Table R602.3(1)

HPVA

Hardwood Plywood & Veneer Association
1825 Michael Faraday Drive
Reston, Virginia 20190-5350

Standard reference number	Title	Referenced in code section number
ANSI/HP-1—2013	Standard for Hardwood and Decorative Plywood	R702.5

IAPMO

IAPMO
4755 E. Philadelphia Street
Ontario, CA 91761-USA

Standard reference number	Title	Referenced in code section number
CSA B45.5—11/ IAPMO Z124—11	Plastic Plumbing Fixtures	Table P2701.1, P2711.1, P2711.2, P2712.1

ICC

International Code Council, Inc.
500 New Jersey Avenue, NW
6th Floor
Washington, DC 20001

Standard reference number	Title	Referenced in code section number
IBC—15	International Building Code®	R101.2, R110.2, R202, R301.1.1, R301.1.3, R301.2.2.1.1, R301.2.2.1.2, R301.2.2.4, R301.3, R308.5, R320.1, R320.1.1, R403.1.8, Table R602.10.3(3), Table R606.12.2.1, R609.2, R802.1.5.4, R905.10.3, N1107.4, G2402.3
ICC/ANSI A117.1—09	Accessible and Usable Buildings and Facilities	R321.3
ICC 400—12	Standard on the Design and Construction of Log Structures	R301.1.1, 502.1.4, R602.1.4, R703.1, R802.1.3
ICC 500—14	ICC/NSSA Standard on the Design and Construction of Storm Shelters	R323.1
ICC 600—14	Standard for Residential Construction in High-wind Regions	R301.2.1.1
IECC—15	International Energy Conservation Code®	N1101.2, N1101.5, N1101.13.1
IFC—15	International Fire Code®	R102.7, R324.2, M2201.7, G2402.3, G2412.2
IFGC—15	International Fuel Gas Code®	G2401.1, G2402.3, G2423.1
IMC—15	International Mechanical Code®	N1103.2.1, N1103.6, G2402.3
IPC—15	International Plumbing Code®	Table R301.2(1), R903.4.1, G2402.3, R2601.1, Table P2902.3, P2902.5.5,
IPMC—15	International Property Maintenance Code®	R102.7
IPSDC—15	International Private Sewage Disposal Code®	R322.1.7
ISPSC—15	International Swimming Pool and Spa Code™	R326.1

ISO

International Organization for Standardization
1, ch. de la Voie - Creuse
Case postale 56
CH-1211 Geneva 20, Switzerland

Standard reference number	Title	Referenced in code section number
8336—2009	Fibre-cement Flat Sheets-product Specification and Test Methods	Table R503.2.1.1(1), Table R503.2.1.1(2), Table R602.3(2), Table R702.4.2, R703.10.1, R703.10.2
15874—2002	Polypropylene Plastic Piping Systems for Hot and Cold Water Installations	Table M2101.1

MSS

Manufacturers Standardization Society of the Valve and Fittings Industry
127 Park Street, Northeast
Vienna, VA 22180

Standard reference number	Title	Referenced in code section number
SP-42—09	Corrosion Resistant Gate, Globe, Angle and Check Valves with Flanged and Butt Weld Ends (Glasses 150, 300 & 600)	Table P2903.9.4
SP-58—09	Pipe Hangers and Supports—Materials, Design, Manufacture, Selection, Application and Installation	G2418.2
SP-67—11	Butterfly Valves	Table P2903.9.4
SP-70—11	Gray Iron Gate Valves, Flanged and Threaded Ends	Table P2903.9.4
SP-71—11	Gray Iron Swing Check Valves, Flanged and Threaded Ends	Table P2903.9.4
SP-72—10	Ball Valves with Flanged or Butt-Welding Ends for General Service	P2903.9.4
SP-78—11	Cast Iron Plug Valves, Flanged and Threaded Ends	Table P2903.9.4
SP-80—08	Bronze Gate, Globe, Angle and Check Valves	Table P2903.9.4
SP-110—10	Ball Valves, Threaded, Socket Welded, Solder Joint, Grooved and Flared Ends	Table P2903.9.4

NAIMA

North American Insulation Manufacturers Association
44 Canal Center Plaza, Suite 310
Alexandria, VA 22314

Standard reference number	Title	Referenced in code section number
AH 116—09	Fibrous Glass Duct Construction Standards, Fifth Edition	M1601.1.1

NFPA

National Fire Protection Association
1 Batterymarch Park
Quincy, MA 02269

Standard reference number	Title	Referenced in code section number
13—13	Installation of Sprinkler Systems	R302.3
13D—13	Standard for the Installation of Sprinkler Systems in One- and Two-family Dwellings and Manufactured Homes	R302.13, R313.1.1, R313.2.1, R325.5, P2904.1, P2904.6.1
13R—13	Standard for the Installation of Sprinkler Systems in Residential Occupancies Up to and Including Four Stories in Height	R325.5
31—11	Standard for the Installation of Oil-burning Equipment	M1701.1, M1801.3.1, M1805.3
58—14	Liquefied Petroleum Gas Code	G2412.2, G2414.6.2
70—14	National Electrical Code	E3401.1, E3401.2, E4301.1, Table E4303.2, E4304.3, E4304.4, R324.3
72—13	National Fire Alarm and Signaling Code	R314.1, R314.7.1
85—15	Boiler and Combustion Systems Hazards Code	G2452.1
211—13	Standard for Chimneys, Fireplaces, Vents and Solid Fuel Burning Appliances	R1002.5, G2427.5.5.1
259—13	Standard for Test Method for Potential Heat of Building Materials	R316.5.7, R316.5.8

NFPA—continued

275—13	Standard Method of Fire Tests for the Evaluation of Thermal Barriers	R316.4
286—15	Standard Methods of Fire Tests for Evaluating Contribution of Wall and Ceiling Interior Finish to Room Fire Growth	R302.9.4, R316.6
501—13	Standard on Manufactured Housing	R202
720—15	Standard for the Installation of Carbon Monoxide (CO) Detectors and Warning Equipment	R315.6.1, R315.6.2
853—15	Standard on the Installation of Stationary Fuel Cell Power Systems	M1903.1

NSF

NSF International
789 N. Dixboro
Ann Arbor, MI 48105

Standard reference number	Title	Referenced in code section number
14—2011	Plastics Piping System Components and Related Materials	M1301.4, P2609.3, P2908.3
41—2011	Nonliquid Saturated Treatment Systems (Composting Toilets)	P2725.1
42—2011	Drinking Water Treatment Units—Anesthetic Effects	P2909.1, P2909.3
44—2012	Residential Cation Exchange Water Softeners	P2909.1, P2909.3
50—2012	Equipment for Swimming Pools, Hot Tubs and Other Recreational Water Facilities	P2911.8.1
53—2011A	Drinking Water Treatment Units—Health Effects	P2909.1, P2909.3
58—2012	Reverse Osmosis Drinking Water Treatment Systems	P2909.2, P2909.3
61—2012	Drinking Water System Components—Health Effects	P2609.5, P2722.1, P2903.9.4, P2906.4, P2906.5, P2906.6, P2908.3
350—2011	Onsite Residential and Commercial Water Reuse Treatment Systems	P2910.6.1
358-1—2011	Polyethylene Pipe and Fittings for Water-based Ground Source "Geothermal" Heat Pump Systems	M2105.4, M2105.5, Table AG101.1
358-2—2012	Polypropylene Pipe and Fittings for Water-based Ground Source "Geothermal" Heat Pump Systems	M2105.5
359—2012	Valves for Crosslinked Polyethylene (PEX) Water Distribution Tubing Systems	Table P2903.9.4
372—2010	Drinking Water Systems Components—Lead Content	P2906.2.1

PCA

Portland Cement Association
5420 Old Orchard Road
Skokie, IL 60077

Standard reference number	Title	Referenced in code section number
100—12	Prescriptive Design of Exterior Concrete Walls for One- and Two-family Dwellings (Pub. No. EB241)	R301.2.2.2.4, R301.2.2.3.4, R404.1.3, R404.1.3.2.1, R404.1.3.2.2, R404.1.3.4, R404.1.4.2, R608.1, R608.2, R608.5.1, R608.9.2, R608.9.3

SBCA

Structural Building Components Association
6300 Enterprise Lane
Madison, WI 53719

Standard reference number	Title	Referenced in code section number
BCSI—2013	Building Component Safety Information Guide to Good Practice for Handling, Installing, Restraining & Bracing of Metal Plate Connected Wood Trusses	502.11.2, 802.10.3
CFS-BCSI—2008	Cold-formed Steel Building Component Safety Information (CFSBCSI) Guide to Good Practice for Handling, Installing & Bracing of Cold-formed Steel Trusses	505.1.3, 804.3.6
FS100—12	Standard Requirements for Wind Pressure Resistance of Foam Plastic Insulating Sheathing Used in Exterior Wall Covering Assemblies	R316.8

SMACNA

Sheet Metal & Air Conditioning Contractors National Assoc. Inc.
4021 Lafayette Center Road
Chantilly, VA 22021

Standard reference number	Title	Referenced in code section number
SMACNA—10	Fibrous Glass Duct Construction Standards (2003)	M1601.1.1, M1601.4.1
SMACNA—15	HVAC Duct Construction Standards—Metal and Flexible 4th Edition (ANSI)	M1601.4.1

SRCC

Solar Rating & Certification Corporation
400 High Point Drive, Suite 400
Cocoa, FL 32926

Standard reference number	Title	Referenced in code section number
SRCC 100—13	Standard 100 for Solar Collectors	M2301.3.1
SRCC 300—13	Standard 300 for Solar Water Heating Systems	M2301.2.3, M2301.4, M2301.2.6, M2301.2.8
SRCC 600—13	Standard 600 for Solar Concentrating Collectors	M2301.3.1

TMS

The Masonry Society
105 South Sunset Street, Suite Q
Longmont, CO 80501

Standard reference number	Title	Referenced in code section number
402—2013	Building Code Requirements for Masonry Structures	R404.1.2, R606.1, R606.1.1, R606.2.3.2, R606.12.1, R606.12.2.3.1, R606.12.3.1, Table R703.4, 703.12
403—2013	Direct Design Handbook for Masonry Structures	R606.1, R606.1.1, R606.12.1, R606.12.3.1
602—2013	Specification for Masonry Structures	R404.1.2, R606.2.9, R606.2.12, R606.12.3.1, R703.12

TPI

Truss Plate Institute
218 N. Lee Street, Suite 312
Alexandria, VA 22314

Standard reference number	Title	Referenced in code section number
TPI 1—2014	National Design Standard for Metal-plate-connected Wood Truss Construction	R502.11.1, R802.10.2

UL

UL LLC
333 Pfingsten Road
Northbrook, IL 60062

Standard reference number	Title	Referenced in code section number
17—2008	Vent or Chimney Connector Dampers for Oil-fired Appliances—with revisions through January 2010	M1802.2.2
55A—04	Materials for Built-up Roof Coverings	R905.9.2
58—14	Liquefied Petroleum Gas Code	M2201.1
80—2007	Steel Tanks for Oil-burner Fuel—with revisions August 2009	M2201.1
103—2010	Factory-built Chimneys for Residential Type and Building Heating Appliances—with revisions through July 2012	R202, R1005.3, G2430.1
127—2011	Factory-built Fireplaces	R1001.11, R1004.1, R1004.4, R1004.5, R1005.4, G2445.7

UL—continued

174—04	Household Electric Storage Tank Water Heaters—with revisions through September 2012	M2005.1
180—2012	Liquid-level Indicating Gauges for Oil Burner Fuels and Other Combustible Liquids	M2201.5
181—05	Factory-made Air Ducts and Air Connectors—with revisions through May 2003	M1601.1.1, M1601.4.1
181A—2013	Closure Systems for Use with Rigid Air Ducts and Air Connectors—with revisions through December 1998	M1601.2, M1601.4.1
181B—2013	Closure Systems for Use with Flexible Air Ducts and Air Connectors—with revisions through August 2003	M1601.4.1
217—06	Single- and Multiple-station Smoke Alarms—with revisions through April 2012	R314.1.1, R315.1.1
263—2011	Standards for Fire Test of Building Construction and Materials	Table 302.1(1), Table R302.1(2), R302.2, R302.3, R302.4.1, R302.11.1, Table R312.1(1), R606.2.2
268—2009	Smoke Detectors for Fire Alarm Systems	R314.7.1, R314.7.4, R315.6.4
325—02	Door, Drapery, Gate, Louver and Window Operations and Systems—with revisions through June 2013	R309.4
343—2008	Pumps for Oil-burning Appliances—with revisions through June 2013	M2204.1
378—06	Draft Equipment—with revisions through January 2010	M1804.2.6
441—10	Gas Vents	G2426.1
508—99	Industrial Control Equipment—with revisions through March 2013	M1411.3.1
536—97	Flexible Metallic Hose—with revisions through June 2003	M2202.3
641—2010	Type L, Low-temperature Venting Systems—with revisions through May 2013	R202, R1003.11.5, M1804.2.4, G2426.1
651—2011	Schedule 40 and Schedule 80 Rigid PVC Conduit and Fittings—with revisions through March 2012	G2414.6.3
705—04	Standard for Power Ventilators—with revisions through March 2012	M1502.4.4
723—08	Standard for Test for Surface Burning Characteristics of Building Materials—with revisions through September 2010	R202, R302.9.3, R302.9.4, R302.10.1, R302.10.2, R316.3, R316.5.9, R316.5.11, R507.3.2, R802.1.5, M1601.3, M1601.5.2
726—95	Oil-fired Boiler Assemblies—with revisions through April 2011	M2001.1.1, M2006.1
727—06	Oil-fired Central Furnaces—with revisions through April 2010	M1402.1
729—03	Oil-fired Floor Furnaces—with revisions through August 2012	M1408.1
730—03	Oil-fired Wall Furnaces—with revisions through August 2012	M1409.1
732—95	Oil-fired Storage Tank Water Heaters—with revisions through April 2010	M2005.1
737—2011	Fireplaces Stoves	M1414.1, M1901.2
790—04	Standard Test Methods for Fire Tests of Roof Coverings—with revisions through October 2008	R302.2.2, R902.1
795—2011	Commercial-industrial Gas Heating Equipment—with Revisions through September 2012	G2442.1, G2452.1
834—04	Heating, Water Supply and Power Boilers—Electric—with revisions through January 2013	M2001.1.1
842—07	Valves for Flammable Fluids—with revisions through October 2012	M2204.2
858—05	Household Electric Ranges—with revisions through April 2012	M1901.2
875—09	Electric Dry-bath Heaters with revisions through November 2011	M1902.2
896—93	Oil-burning Stoves—with revisions through August 2012	M1410.1
923—2013	Microwave Cooking Appliances	M1504.1
959—2010	Medium Heat Appliance Factory-built Chimneys	R1005.6
1026—2012	Electric Household Cooking and Food Serving Appliances	M1901.2
1040—96	Fire Test of Insulated Wall Construction—with revisions through October 2012	R316.6
1042—2009	Electric Baseboard Heating Equipment—with Revisions through June 2013	M1405.1
1256—02	Fire Test of Roof Deck Construction—with revisions through January 2007	R906.1
1261—01	Electric Water Heaters for Pools and Tubs—with revisions through July 2012	M2006.1
1479—03	Fire Tests of Through-Penetration Firestops—with revisions through October 2012	R302.4.1.2
1482—2011	Solid-Fuel-type Room Heaters	R1002.2, R1002.5, M1410.1
1618—09	Wall Protectors, Floor Protectors, and Hearth Extensions—with revisions through May 2013	R1004.2, M1410.2
1693—2010	Electric Radiant Heating Panels and Heating Panel Sets—with revisions through October 2011	M1406.1
1703—02	Flat-plate Photovoltaic Modules and Panels—with revisions through November 2014	R324.3.1, R902.4, R905.16.5, R907.5
1715—97	Fire Test of Interior Finish Material—with revisions through January 2013	R316.6
1738—2010	Venting Systems for Gas-burning Appliances, Categories II, III and IV—with revisions Through May 2011	G2426.1

UL—continued

1741—2010	Inverters, Converters, Controllers and Interconnection System Equipment for use with Distributed Energy Resources	R324.3
1777—07	Chimney Liners—with revisions through July 2009	R1003.11.1, R1003.18, G2425.12, G2425.15.4, M1801.3.4
1995—2011	Heating and Cooling Equipment	M1402.1, M1403.1, M1407.1, M1412.1, M1413.1
1996—2009	Electric Duct Heaters—with revisions through November 2011	M1402.1, M1407.1
2034—08	Standard for Single- and Multiple-station Carbon Monoxide Alarms—with revisions through February 2009	R314.1.1, R315.1.1
2075—2013	Standard for Gas and Vapor Detectors and Sensors	R314.7.4, R315.6.1, R315.6.4
2158A—2010	Outline of Investigation for Clothes Dryer Transition Duct	M1502.4.3
2523—09	Standard for Solid Fuel-fired Hydronic Heating Appliances, Water Heaters and Boilers—with revisions through February 2013	M2005.1, M2001.1.1
UL/CSA/ANCE 60335-2-40—2012	Standard for Household and Similar Electrical Appliances, Part 2: Particular Requirements for Motor-compressors	M1403.1, M1412.1, M1413.1

ULC

ULC
7 Underwriters Road
Toronto, Ontario, Canada M1R 3B4

Standard reference number	Title	Referenced in code section number
CAN/ULC S 102.2—2010	Standard Methods for Test for Surface Burning Characteristics of Building Materials and Assemblies	R302.10.1, R302.10.2

WDMA

Window & Door Manufacturers Association
2025 M Street, NW Suite 800
Washington, DC 20036-3309

Standard reference number	Title	Referenced in code section number
AAMA/WDMA/CSA 101/I.S2/A440—11	North American Fenestration Standard/Specifications for Windows, Doors and Skylights	R308.6.9, R609.3, N1102.4.3
I.S. 11—13	Industry Standard Analytical Method for Design Pressure (DP) Ratings of Fenestration Products	R308.6.9.1, R609.3.1

APPENDIX A

SIZING AND CAPACITIES OF GAS PIPING

(This appendix is informative and is not part of the *code*. This appendix is an excerpt from the 2015 *International Fuel Gas Code*, coordinated with the section numbering of the *International Residential Code*.)

A.1 General piping considerations. The first goal of determining the pipe sizing for a fuel gas *piping* system is to make sure that there is sufficient gas pressure at the inlet to each *appliance*. The majority of systems are residential and the appliances will all have the same, or nearly the same, requirement for minimum gas pressure at the *appliance* inlet. This pressure will be about 5-inch water column (w.c.) (1.25 kPa), which is enough for proper operation of the *appliance* regulator to deliver about 3.5-inches water column (w.c.) (875 kPa) to the burner itself. The pressure drop in the *piping* is subtracted from the source delivery pressure to verify that the minimum is available at the *appliance*.

There are other systems, however, where the required inlet pressure to the different appliances may be quite varied. In such cases, the greatest inlet pressure required must be satisfied, as well as the farthest *appliance*, which is almost always the critical *appliance* in small systems.

There is an additional requirement to be observed besides the capacity of the system at 100-percent flow. That requirement is that at minimum flow, the pressure at the inlet to any *appliance* does not exceed the pressure rating of the *appliance* regulator. This would seldom be of concern in small systems if the source pressure is $^1/_2$ psi (14-inch w.c.) (3.5 kPa) or less but it should be verified for systems with greater gas pressure at the point of supply.

To determine the size of *piping* used in a gas *piping* system, the following factors must be considered:

(1) Allowable loss in pressure from *point of delivery* to *appliance*.

(2) Maximum gas demand.

(3) Length of *piping* and number of fittings.

(4) Specific gravity of the gas.

(5) Diversity factor.

For any gas *piping* system or special *appliance*, or for conditions other than those covered by the tables provided in this code such as longer runs, greater gas demands or greater pressure drops, the size of each gas *piping* system should be determined by standard engineering practices acceptable to the code official.

A.2 Description of tables.

A.2.1 General. The quantity of gas to be provided at each *outlet* should be determined, whenever possible, directly from the manufacturer's gas input Btu/h rating of the *appliance* that will be installed. In case the ratings of the appliances to be installed are not known, Table 402.2 shows the approximate consumption (in Btu per hour) of certain types of typical household appliances.

To obtain the cubic feet per hour of gas required, divide the total Btu/h input of all appliances by the average Btu heating value per cubic feet of the gas. The average Btu per cubic feet of the gas in the area of the installation can be obtained from the serving gas supplier.

A.2.2 Low pressure natural gas tables. Capacities for gas at low pressure [less than 2.0 psig (13.8 kPa gauge)] in cubic feet per hour of 0.60 specific gravity gas for different sizes and lengths are shown in Tables 402.4(1) and 402.4(2) for iron pipe or equivalent rigid pipe; in Tables 402.4(8) through 402.4(11) for smooth wall semirigid tubing; and in Tables 402.4(15) through 402.4(17) for corrugated stainless steel tubing. Tables 402.4(1) and 402.4(6) are based upon a pressure drop of 0.3-inch w.c. (75 Pa), whereas Tables 402.4(2), 402.4(9) and 402.4(15) are based upon a pressure drop of 0.5-inch w.c. (125 Pa). Tables 402.4(3), 402.4(4), 402.4(10), 402.4(11), 402.4(16) and 402.4(17) are special low-pressure applications based upon pressure drops greater than 0.5-inch w.c. (125 Pa). In using these tables, an allowance (in equivalent length of pipe) should be considered for any *piping* run with four or more fittings (see Table A.2.2).

A.2.3 Undiluted liquefied petroleum tables. Capacities in thousands of Btu per hour of undiluted liquefied petroleum gases based on a pressure drop of 0.5-inch w.c. (125 Pa) for different sizes and lengths are shown in Table 402.4(28) for iron pipe or equivalent rigid pipe, in Table 402.4(30) for smooth wall semi-rigid tubing, in Table 402.4(32) for corrugated stainless steel tubing, and in Tables 402.4(35) and 402.4(37) for polyethylene plastic pipe and tubing. Tables 402.4(33) and 402.4(34) for corrugated stainless steel tubing and Table 402.4(36) for polyethylene plastic pipe are based on operating pressures greater than $1^1/_2$ pounds per square inch (psi) (3.5 kPa) and pressure drops greater than 0.5-inch w.c. (125 Pa). In using these tables, an allowance (in equivalent length of pipe) should be considered for any *piping* run with four or more fittings [see Table A.2.2].

A.2.4 Natural gas specific gravity. Gas *piping* systems that are to be supplied with gas of a specific gravity of 0.70 or less can be sized directly from the tables provided in this code, unless the code official specifies that a gravity factor be applied. Where the specific gravity of the gas is greater than 0.70, the gravity factor should be applied.

Application of the gravity factor converts the figures given in the tables provided in this code to capacities for another gas of different specific gravity. Such application is accomplished by multiplying the capacities given in the tables by the multipliers shown in Table A.2.4. In case the exact specific gravity does not appear in the table, choose the next higher value specific gravity shown.

TABLE A.2.2
EQUIVALENT LENGTHS OF PIPE FITTINGS AND VALVES

		SCREWED FITTINGS[1]				90° WELDING ELBOWS AND SMOOTH BENDS[2]					
		45°/Ell	90°/Ell	180°close return bends	Tee	R/d = 1	R/d = $1^1/_3$	R/d = 2	R/d = 4	R/d = 6	R/d = 8
k factor =		0.42	0.90	2.00	1.80	0.48	0.36	0.27	0.21	0.27	0.36
L/d[1] ratio[4] *n* =		1 4	30	67	60	16	12	9	7	9	12
Nominal pipe size, inches	Inside diameter d, inches, Schedule 40[6]	L = Equivalent Length In Feet of Schedule 40 (Standard-weight) Straight Pipe[6]									
$^1/_2$	0.622	0.73	1.55	3.47	3.10	0.83	0.62	0.47	0.36	0.47	0.62
$^3/_4$	0.824	0.96	2.06	4.60	4.12	1.10	0.82	0.62	0.48	0.62	0.82
1	1.049	1.22	2.62	5.82	5.24	1.40	1.05	0.79	0.61	0.79	1.05
$1^1/_4$	1.380	1.61	3.45	7.66	6.90	1.84	1.38	1.03	0.81	1.03	1.38
$1^1/_2$	1.610	1.88	4.02	8.95	8.04	2.14	1.61	1.21	0.94	1.21	1.61
2	2.067	2.41	5.17	11.5	10.3	2.76	2.07	1.55	1.21	1.55	2.07
$2^1/_2$	2.469	2.88	6.16	13.7	12.3	3.29	2.47	1.85	1.44	1.85	2.47
3	3.068	3.58	7.67	17.1	15.3	4.09	3.07	2.30	1.79	2.30	3.07
4	4.026	4.70	10.1	22.4	20.2	5.37	4.03	3.02	2.35	3.02	4.03
5	5.047	5.88	12.6	28.0	25.2	6.72	5.05	3.78	2.94	3.78	5.05
6	6.065	7.07	15.2	33.8	30.4	8.09	6.07	4.55	3.54	4.55	6.07
8	7.981	9.31	20.0	44.6	40.0	10.6	7.98	5.98	4.65	5.98	7.98
10	10.02	11.7	25.0	55.7	50.0	13.3	10.0	7.51	5.85	7.51	10.0
12	11.94	13.9	29.8	66.3	59.6	15.9	11.9	8.95	6.96	8.95	11.9
14	13.13	15.3	32.8	73.0	65.6	17.5	13.1	9.85	7.65	9.85	13.1
16	15.00	17.5	37.5	83.5	75.0	20.0	15.0	11.2	8.75	11.2	15.0
18	16.88	19.7	42.1	93.8	84.2	22.5	16.9	12.7	9.85	12.7	16.9
20	18.81	22.0	47.0	105.0	94.0	25.1	18.8	14.1	11.0	14.1	18.8
24	22.63	26.4	56.6	126.0	113.0	30.2	22.6	17.0	13.2	17.0	22.6

(continued)

TABLE A.2.2—continued
EQUIVALENT LENGTHS OF PIPE FITTINGS AND VALVES

		MITER ELBOWS[3] (No. of miters)					WELDING TEES		VALVES (screwed, flanged, or welded)			
		1-45°	1-60°	1-90°	2-90°[5]	3-90°[5]	Forged	Miter[3]	Gate	Globe	Angle	Swing Check
k factor =		0.45	0.90	1.80	0.60	0.45	1.35	1.80	0.21	10	5.0	2.5
L/d' ratio[4] n =		15	30	60	20	15	45	60	7	333	167	83
Nominal pipe size, inches	Inside diameter d, inches, Schedule 40[6]	L = Equivalent Length in Feet of Schedule 40 (Standard-weight) Straight Pipe[6]										
$^1/_2$	0.622	0.78	1.55	3.10	1.04	0.78	2.33	3.10	0.36	17.3	8.65	4.32
$^3/_4$	0.824	1.03	2.06	4.12	1.37	1.03	3.09	4.12	0.48	22.9	11.4	5.72
1	1.049	1.31	2.62	5.24	1.75	1.31	3.93	5.24	0.61	29.1	14.6	7.27
$1^1/_4$	1.380	1.72	3.45	6.90	2.30	1.72	5.17	6.90	0.81	38.3	19.1	9.58
$1^1/_2$	1.610	2.01	4.02	8.04	2.68	2.01	6.04	8.04	0.94	44.7	22.4	11.2
2	2.067	2.58	5.17	10.3	3.45	2.58	7.75	10.3	1.21	57.4	28.7	14.4
$2^1/_2$	2.469	3.08	6.16	12.3	4.11	3.08	9.25	12.3	1.44	68.5	34.3	17.1
3	3.068	3.84	7.67	15.3	5.11	3.84	11.5	15.3	1.79	85.2	42.6	21.3
4	4.026	5.04	10.1	20.2	6.71	5.04	15.1	20.2	2.35	112.0	56.0	28.0
5	5.047	6.30	12.6	25.2	8.40	6.30	18.9	25.2	2.94	140.0	70.0	35.0
6	6.065	7.58	15.2	30.4	10.1	7.58	22.8	30.4	3.54	168.0	84.1	42.1
8	7.981	9.97	20.0	40.0	13.3	9.97	29.9	40.0	4.65	22.0	111.0	55.5
10	10.02	12.5	25.0	50.0	16.7	12.5	37.6	50.0	5.85	278.0	139.0	69.5
12	11.94	14.9	29.8	59.6	19.9	14.9	44.8	59.6	6.96	332.0	166.0	83.0
14	13.13	16.4	32.8	65.6	21.9	16.4	49.2	65.6	7.65	364.0	182.0	91.0
16	15.00	18.8	37.5	75.0	25.0	18.8	56.2	75.0	8.75	417.0	208.0	104.0
18	16.88	21.1	42.1	84.2	28.1	21.1	63.2	84.2	9.85	469.0	234.0	117.0
20	18.81	23.5	47.0	94.0	31.4	23.5	70.6	94.0	11.0	522.0	261.0	131.0
24	22.63	28.3	56.6	113.0	37.8	28.3	85.0	113.0	13.2	629.0	314.0	157.0

For SI: 1 foot = 305 mm, 1 degree = 0.01745 rad.

Note: Values for welded fittings are for conditions where bore is not obstructed by weld spatter or backing rings. If appreciably obstructed, use values for "Screwed Fittings."

1. Flanged fittings have three-fourths the resistance of screwed elbows and tees.
2. Tabular figures give the extra resistance due to curvature alone to which should be added the full length of travel.
3. Small size socket-welding fittings are equivalent to miter elbows and miter tees.
4. Equivalent resistance in number of diameters of straight pipe computed for a value of (f - 0.0075) from the *relation* (n - $k/4f$).
5. For condition of minimum resistance where the centerline length of each miter is between d and $2^1/_2 d$.
6. For pipe having other inside diameters, the equivalent resistance can be computed from the above n values.

Source: Crocker, S. *Piping Handbook*, 4th ed., Table XIV, pp. 100-101. Copyright 1945 by McGraw-Hill, Inc. Used by permission of McGraw-Hill Book Company.

TABLE A.2.4
MULTIPLIERS TO BE USED WITH TABLES 402.4(1) THROUGH 402.4(22) WHERE THE SPECIFIC GRAVITY OF THE GAS IS OTHER THAN 0.60

SPECIFIC GRAVITY	MULTIPLIER	SPECIFIC GRAVITY	MULTIPLIER
0.35	1.31	1.00	0.78
0.40	1.23	1.10	0.74
0.45	1.16	1.20	0.71
0.50	1.10	1.30	0.68
0.55	1.04	1.40	0.66
0.60	1.00	1.50	0.63
0.65	0.96	1.60	0.61
0.70	0.93	1.70	0.59
0.75	0.90	1.80	0.58
0.80	0.87	1.90	0.56
0.85	0.84	2.00	0.55
0.90	0.82	2.10	0.54

A.2.5 Higher pressure natural gas tables. Capacities for gas at pressures 2.0 psig (13.8 kPa) or greater in cubic feet per hour of 0.60 specific gravity gas for different sizes and lengths are shown in Tables 402.4(5) through 402.4(7) for iron pipe or equivalent rigid pipe; Tables 402.4(12) to 402.4(14) for semirigid tubing; Tables 402.4(18) and 402.4(19) for corrugated stainless steel tubing; and Table 402.4(22) for polyethylene plastic pipe.

A.3 Use of capacity tables.

A.3.1 Longest length method. This sizing method is conservative in its approach by applying the maximum operating conditions in the system as the norm for the system and by setting the length of pipe used to size any given part of the *piping* system to the maximum value.

To determine the size of each section of gas *piping* in a system within the range of the capacity tables, proceed as follows (also see sample calculations included in this Appendix):

(1) Divide the *piping* system into appropriate segments consistent with the presence of tees, branch lines and main runs. For each segment, determine the gas load (assuming all appliances operate simultaneously) and its overall length. An allowance (in equivalent length of pipe) as determined from Table A.2.2 shall be considered for *piping* segments that include four or more fittings.

(2) Determine the gas demand of each *appliance* to be attached to the *piping* system. Where Tables 402.4(1) through 402.4(24) are to be used to select the *piping* size, calculate the gas demand in terms of cubic feet per hour for each *piping* system *outlet*. Where Tables 402.4(25) through 402.4(37) are to be used to select the *piping* size, calculate the gas demand in terms of thousands of Btu per hour for each *piping* system *outlet*.

(3) Where the *piping* system is for use with other than undiluted liquefied petroleum gases, determine the design system pressure, the allowable loss in pressure (pressure drop), and specific gravity of the gas to be used in the *piping* system.

(4) Determine the length of *piping* from the *point of delivery* to the most remote *outlet* in the building/*piping* system.

(5) In the appropriate capacity table, select the row showing the measured length or the next longer length if the table does not give the exact length. This is the only length used in determining the size of any section of gas *piping*. If the gravity factor is to be applied, the values in the selected row of the table are multiplied by the appropriate multiplier from Table A.2.4.

(6) Use this horizontal row to locate ALL gas demand figures for this particular system of *piping*.

(7) Starting at the most remote *outlet*, find the gas demand for that *outlet* in the horizontal row just selected. If the exact figure of demand is not shown, choose the next larger figure left in the row.

(8) Opposite this demand figure, in the first row at the top, the correct size of gas *piping* will be found.

(9) Proceed in a similar manner for each *outlet* and each section of gas *piping*. For each section of *piping*, determine the total gas demand supplied by that section.

Where a large number of *piping* components (such as elbows, tees and valves) are installed in a pipe run, additional pressure loss can be accounted for by the use of equivalent lengths. Pressure loss across any *piping* component can be equated to the pressure drop through a length of pipe. The equivalent length of a combination of only four elbows/tees can result in a jump to the next larger length row, resulting in a significant reduction in capacity. The equivalent lengths in feet shown in Table A.2.2 have been computed on a basis that the inside diameter corresponds to that of Schedule 40 (standard-weight) steel pipe, which is close enough for most purposes involving other schedules of pipe. Where a more specific solution for equivalent length is desired, this can be made by multiplying the actual inside diameter of the pipe in inches by $n/12$, or the actual inside diameter in feet by n (n can be read from the table heading). The equivalent length values can be used with reasonable accuracy for copper or brass fittings and bends although the resistance per foot of copper or brass pipe is less than that of steel. For copper or brass valves, however, the equivalent length of pipe should be taken as 45 percent longer than the values in the table, which are for steel pipe.

A.3.2 Branch length method. This sizing method reduces the amount of conservatism built into the traditional Longest Length Method. The longest length as measured from the meter to the furthest remote *appliance* is only used to size the initial parts of the overall *piping* system. The Branch Length Method is applied in the following manner:

(1) Determine the gas load for each of the connected appliances.

(2) Starting from the meter, divide the *piping* system into a number of connected segments, and determine the length and amount of gas that each segment would carry assuming that all appliances were operated simultaneously. An allowance (in equivalent length of pipe) as determined from Table A.2.2 should be considered for piping segments that include four or more fittings.

(3) Determine the distance from the *outlet* of the gas meter to the *appliance* furthest removed from the meter.

(4) Using the longest distance (found in Step 3), size each *piping* segment from the meter to the most remote *appliance outlet.*

(5) For each of these *piping* segments, use the longest length and the calculated gas load for all of the connected appliances for the segment and begin the sizing process in Steps 6 through 8.

(6) Referring to the appropriate sizing table (based on operating conditions and *piping* material), find the longest length distance in the first column or the next larger distance if the exact distance is not listed. The use of alternative operating pressures and/or pressure drops will require the use of a different sizing table, but will not alter the sizing methodology. In many cases, the use of alternative operating pressures and/or pressure drops will require the approval of both the code official and the local gas serving utility.

(7) Trace across this row until the gas load is found or the closest larger capacity if the exact capacity is not listed.

(8) Read up the table column and select the appropriate pipe size in the top row. Repeat Steps 6, 7 and 8 for each pipe segment in the longest run.

(9) Size each remaining section of branch *piping* not previously sized by measuring the distance from the gas meter location to the most remote *outlet* in that branch, using the gas load of attached appliances and following the procedures of Steps 2 through 8.

A.3.3 Hybrid pressure method. The sizing of a 2 psi (13.8 kPa) gas *piping* system is performed using the traditional Longest Length Method but with modifications. The 2 psi (13.8 kPa) system consists of two independent pressure zones, and each zone is sized separately. The Hybrid Pressure Method is applied as follows:

The sizing of the 2 psi (13.8 kPa) section (from the meter to the line regulator) is as follows:

(1) Calculate the gas load (by adding up the name plate ratings) from all connected appliances. (In certain circumstances the installed gas load can be increased up to 50 percent to accommodate future addition of appliances.) Ensure that the line regulator capacity is adequate for the calculated gas load and that the required pressure drop (across the regulator) for that capacity does not exceed $^3/_4$ psi (5.2 kPa) for a 2 psi (13.8 kPa) system. If the pressure drop across the regulator is too high (for the connected gas load), select a larger regulator.

(2) Measure the distance from the meter to the line regulator located inside the building.

(3) If there are multiple line regulators, measure the distance from the meter to the regulator furthest removed from the meter.

(4) The maximum allowable pressure drop for the 2 psi (13.8 kPa) section is 1 psi (6.9 kPa).

(5) Referring to the appropriate sizing table (based on *piping* material) for 2 psi (13.8 kPa) systems with a 1 psi (6.9 kPa) pressure drop, find this distance in the first column, or the closest larger distance if the exact distance is not listed.

(6) Trace across this row until the gas load is found or the closest larger capacity if the exact capacity is not listed.

(7) Read up the table column to the top row and select the appropriate pipe size.

(8) If there are multiple regulators in this portion of the *piping* system, each line segment must be sized for its actual gas load, but using the longest length previously determined above.

The low pressure section (all *piping* downstream of the line regulator) is sized as follows:

(1) Determine the gas load for each of the connected appliances.

(2) Starting from the line regulator, divide the piping system into a number of connected segments or independent parallel piping segments, and determine the amount of gas that each segment would carry assuming that all appliances were operated simultaneously. An allowance (in equivalent length of pipe) as determined from Table A.2.2 should be considered for piping segments that include four or more fittings.

(3) For each piping segment, use the actual length or longest length (if there are sub-branchlines) and the calculated gas load for that segment and begin the sizing process as follows:

(a) Referring to the appropriate sizing table (based on operating pressure and piping material), find the longest length distance in the first column or the closest larger distance if the exact distance is not listed. The use of alternative operating pressures and/or pressure drops will require the use of a different sizing table, but will not alter the sizing methodology. In many cases, the use of alternative operating pressures and/or pressure drops can require the approval of the code official.

(b) Trace across this row until the appliance gas load is found or the closest larger capacity if the exact capacity is not listed.

(c) Read up the table column to the top row and select the appropriate pipe size.

(d) Repeat this process for each segment of the piping system.

A.3.4 Pressure drop per 100 feet method. This sizing method is less conservative than the others, but it allows the designer to immediately see where the largest pressure drop occurs in the system. With this information, modifications can be made to bring the total drop to the critical *appliance* within the limitations that are presented to the designer.

Follow the procedures described in the Longest Length Method for Steps (1) through (4) and (9).

For each *piping* segment, calculate the pressure drop based on pipe size, length as a percentage of 100 feet (30 480 mm) and gas flow. Table A.3.4 shows pressure drop per 100 feet (30 480 mm) for pipe sizes from $^1/_2$ inch (12.7 mm) through 2 inches (51 mm). The sum of pressure drops to the critical *appliance* is subtracted from the supply pressure to verify that sufficient pressure will be available. If not, the layout can be examined to find the high drop section(s) and sizing selections modified.

Note: Other values can be obtained by using the following equation:

$$\text{Desired Value} = MBH \times \sqrt{\frac{\text{Desired Drop}}{\text{Table Drop}}}$$

For example, if it is desired to get flow through $^3/_4$-inch (19.1 mm) pipe at 2 inches/100 feet, multiply the capacity of $^3/_4$-inch (19.1 mm) pipe at 1 inch/100 feet by the square root of the pressure ratio:

$$147\ MBH \times \sqrt{\frac{2''\ \text{w.c.}}{1''\ \text{w.c.}}} = 147 \times 1.414 = 208\ MBH$$

$$(MBH = 1000\ \text{Btu/h})$$

A.4 Use of sizing equations. Capacities of smooth wall pipe or tubing can also be determined by using the following formulae:

(1) High Pressure [1.5 psi (10.3 kPa) and above]:

$$Q = 181.6\sqrt{\frac{D^5 \cdot (P_1^2 - P_2^2) \cdot Y}{C_r \cdot fba \cdot L}}$$

$$= 2237\ D^{2.623}\left[\frac{(P_1^2 - P_2^2) \cdot Y}{C_r \cdot L}\right]^{0.541}$$

(2) Low Pressure [Less than 1.5 psi (10.3 kPa)]:

$$Q = 187.3\sqrt{\frac{D^5 \cdot \Delta H}{C_r \cdot fba \cdot L}}$$

$$= 2313 D^{2.623}\left(\frac{\Delta H}{C_r \cdot L}\right)^{0.541}$$

where:

Q = Rate, cubic feet per hour at 60°F and 30-inch mercury column

D = Inside diameter of pipe, in.

P_1 = Upstream pressure, psia

P_2 = Downstream pressure, psia

Y = Superexpansibility factor = 1/supercompressibility factor

C_r = Factor for viscosity, density and temperature*

$$= 0.00354\ ST\left(\frac{Z}{S}\right)^{0.152}$$

Note: See Table 402.4 for Y and C_r for natural gas and propane.

TABLE A.3.4
THOUSANDS OF BTU/H (MBH) OF NATURAL GAS PER 100 FEET OF PIPE AT VARIOUS PRESSURE DROPS AND PIPE DIAMETERS

PRESSURE DROP PER 100 FEET IN INCHES W.C.	PIPE SIZES (inch)					
	$^1/_2$	$^3/_4$	1	$1^1/_4$	$1^1/_2$	2
0.2	31	64	121	248	372	716
0.3	38	79	148	304	455	877
0.5	50	104	195	400	600	1160
1.0	71	147	276	566	848	1640

For SI: 1 inch = 25.4 mm, 1 foot = 304.8 mm.

S = Specific gravity of gas at 60°F and 30-inch mercury column (0.60 for natural gas, 1.50 for propane), or = 1488μ

T = Absolute temperature, °F or = $t + 460$

t = Temperature, °F

Z = Viscosity of gas, centipoise (0.012 for natural gas, 0.008 for propane), or = 1488μ

fba = Base friction factor for air at 60°F (CF = 1)

L = Length of pipe, ft

ΔH = Pressure drop, in. w.c. (27.7 in. H_2O = 1 psi)

(For SI, see Section 402.4)

A.5 Pipe and tube diameters. Where the internal diameter is determined by the formulas in Section 402.4, Tables A.5.1 and A.5.2 can be used to select the nominal or standard pipe size based on the calculated internal diameter.

TABLE A.5.1
SCHEDULE 40 STEEL PIPE STANDARD SIZES

NOMINAL SIZE (inch)	INTERNAL DIAMETER (inch)	NOMINAL SIZE (inch)	INTERNAL DIAMETER (inch)
1/4	0.364	1 1/2	1.610
3/8	0.493	2	2.067
1/2	0.622	2 1/2	2.469
3/4	0.824	3	3.068
1	1.049	3 1/2	3.548
1 1/4	1.380	4	4.026

For SI: 1 inch = 25.4 mm.

A.6 Examples of piping system design and sizing.

A.6.1 Example 1: Longest length method. Determine the required pipe size of each section and *outlet* of the *piping* system shown in Figure A.6.1, with a designated pressure drop of 0.5-inch w.c. (125 Pa) using the Longest Length Method. The gas to be used has 0.60 specific gravity and a heating value of 1,000 Btu/ft^3 (37.5 MJ/m^3).

Solution:

(1) Maximum gas demand for *Outlet* A:

$$\frac{\text{Consumption (rating plate input, or Table 402.2 if necessary}}{\text{Btu of gas}} =$$

$$\frac{\text{35,000 Btu per hour rating}}{\text{1,000 Btu per cubic foot}} = \text{35 cubic feet per hour} = \text{35 cfh}$$

Maximum gas demand for *Outlet* B:

$$\frac{\text{Consumption}}{\text{Btu of gas}} = \frac{75{,}000}{1{,}000} = 75 \text{ cfh}$$

Maximum gas demand for *Outlet* C:

$$\frac{\text{Consumption}}{\text{Btu of gas}} = \frac{35{,}000}{1{,}000} = 35 \text{ cfh}$$

Maximum gas demand for *Outlet* D:

$$\frac{\text{Consumption}}{\text{Btu of gas}} = \frac{100{,}000}{1{,}000} = 100 \text{ cfh}$$

(2) The length of pipe from the *point of delivery* to the most remote *outlet* (A) is 60 feet (18 288 mm). This is the only distance used.

(3) Using the row marked 60 feet (18 288 mm) in Table 402.4(2):

(a) *Outlet* A, supplying 35 cfh (0.99 m^3/hr), requires 1/2-inch pipe.

TABLE A.5.2
COPPER TUBE STANDARD SIZES

TUBE TYPE	NOMINAL OR STANDARD SIZE (inches)	INTERNAL DIAMETER (inches)
K	1/4	0.305
L	1/4	0.315
ACR (D)	3/8	0.315
ACR (A)	3/8	0.311
K	3/8	0.402
L	3/8	0.430
ACR (D)	1/2	0.430
ACR (A)	1/2	0.436
K	1/2	0.527
L	1/2	0.545
ACR (D)	5/8	0.545
ACR (A)	5/8	0.555
K	5/8	0.652
L	5/8	0.666
ACR (D)	3/4	0.666
ACR (A)	3/4	0.680
K	3/4	0.745
L	3/4	0.785
ACR	7/8	0.785
K	1	0.995
L	1	1.025
ACR	1 1/8	1.025
K	1 1/4	1.245
L	1 1/4	1.265
ACR	1 3/8	1.265
K	1 1/2	1.481
L	1 1/2	1.505
ACR	1 5/8	1.505
K	2	1.959
L	2	1.985
ACR	2 1/8	1.985
K	2 1/2	2.435
L	2 1/2	2.465
ACR	2 5/8	2.465
K	3	2.907
L	3	2.945
ACR	3 1/8	2.945

For SI: 1 inch = 25.4 mm.

(b) *Outlet* B, supplying 75 cfh (2.12 m^3/hr), requires $^3/_4$-inch pipe.

(c) Section 1, supplying *Outlets* A and B, or 110 cfh (3.11 m^3/hr), requires $^3/_4$-inch pipe.

(d) Section 2, supplying *Outlets* C and D, or 135 cfh (3.82 m^3/hr), requires $^3/_4$-inch pipe.

(e) Section 3, supplying *Outlets* A, B, C and D, or 245 cfh (6.94 m^3/hr), requires 1-inch pipe.

(4) If a different gravity factor is applied to this example, the values in the row marked 60 feet (18 288 mm) of Table 402.4(2) would be multiplied by the appropriate multiplier from Table A.2.4 and the resulting cubic feet per hour values would be used to size the *piping*.

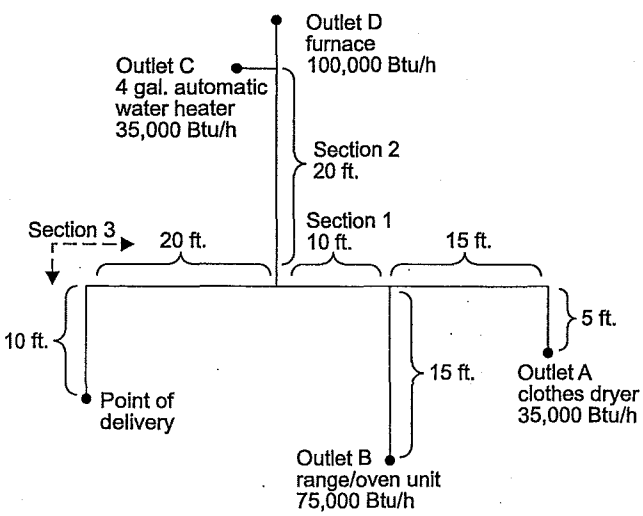

FIGURE A.6.1
PIPING PLAN SHOWING A STEEL PIPING SYSTEM

A.6.2 Example 2: Hybrid or dual pressure systems. Determine the required CSST size of each section of the *piping* system shown in Figure A.6.2, with a designated pressure drop of 1 psi (6.9 kPa) for the 2 psi (13.8 kPa) section and 3-inch w.c. (0.75 kPa) pressure drop for the 13-inch w.c. (2.49 kPa) section. The gas to be used has 0.60 specific gravity and a heating value of 1,000 Btu/ft^3 (37.5 MJ/ m^3).

Solution:

(1) Size 2 psi (13.8 kPa) line using Table 402.4(18).

(2) Size 10-inch w.c. (2.5 kPa) lines using Table 402.4(16).

(3) Using the following, determine if sizing tables can be used.

(a) Total gas load shown in Figure A.6.2 equals 110 cfh (3.11 m^3/hr).

(b) Determine pressure drop across regulator [see notes in Table 402.4(18)].

(c) If pressure drop across regulator exceeds $^3/_4$ psig (5.2 kPa), Table 402.4(18) cannot be used. Note: If pressure drop exceeds $^3/_4$ psi (5.2 kPa), then a larger regulator must be selected or an alternative sizing method must be used.

(d) Pressure drop across the line regulator [for 110 cfh (3.11 m^3/hr)] is 4-inch w.c. (0.99 kPa) based on manufacturer's performance data.

(e) Assume the CSST manufacturer has tubing sizes or EHDs of 13, 18, 23 and 30.

(4) Section A [2 psi (13.8 kPa) zone]

(a) Distance from meter to regulator = 100 feet (30 480 mm).

(b) Total load supplied by A = 110 cfh (3.11 m^3/hr) (furnace + water heater + dryer).

(c) Table 402.4(18) shows that EHD size 18 should be used.

Note: It is not unusual to oversize the supply line by 25 to 50 percent of the as-installed load. EHD size 18 has a capacity of 189 cfh (5.35 m^3/hr).

(5) Section B (low pressure zone)

(a) Distance from regulator to furnace is 15 feet (4572 mm).

(b) Load is 60 cfh (1.70 m^3/hr).

(c) Table 402.4(16) shows that EHD size 13 should be used.

(6) Section C (low pressure zone)

(a) Distance from regulator to water heater is 10 feet (3048 mm).

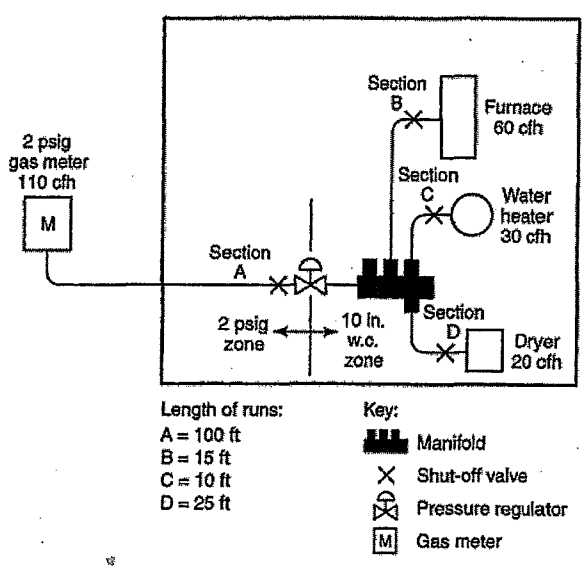

FIGURE A.6.2
PIPING PLAN SHOWING A CSST SYSTEM

(b) Load is 30 cfh (0.85 m^3/hr).

(c) Table 402.4(16) shows that EHD size 13 should be used.

(7) Section D (low pressure zone)

(a) Distance from regulator to dryer is 25 feet (7620 mm).

(b) Load is 20 cfh (0.57 m^3/hr).

(c) Table 402.4(16) shows that EHD size 13 should be used.

A.6.3 Example 3: Branch length method. Determine the required semirigid copper tubing size of each section of the *piping* system shown in Figure A.6.3, with a designated pressure drop of 1-inch w.c. (250 Pa) (using the Branch Length Method). The gas to be used has 0.60 specific gravity and a heating value of 1,000 Btu/ft^3 (37.5 MJ/m^3).

Solution:

(1) Section A

(a) The length of tubing from the *point of delivery* to the most remote *appliance* is 50 feet (15 240 mm), A + C.

(b) Use this longest length to size Sections A and C.

(c) Using the row marked 50 feet (15 240 mm) in Table 402.4(10), Section A, supplying 220 cfh (6.2 m^3/hr) for four appliances requires 1-inch tubing.

(2) Section B

(a) The length of tubing from the *point of delivery* to the range/oven at the end of Section B is 30 feet (9144 mm), A + B.

(b) Use this branch length to size Section B only.

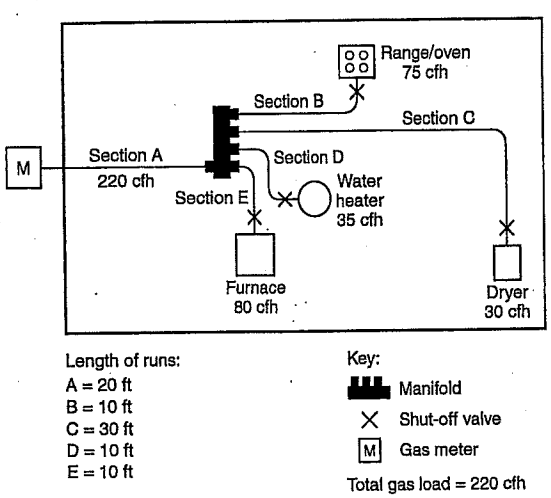

FIGURE A.6.3
PIPING PLAN SHOWING A COPPER TUBING SYSTEM

(c) Using the row marked 30 feet (9144 mm) in Table 402.4(10), Section B, supplying 75 cfh (2.12 m^3/hr) for the range/oven requires $^1/_2$-inch tubing.

(3) Section C

(a) The length of tubing from the *point of delivery* to the dryer at the end of Section C is 50 feet (15 240 mm), A + C.

(b) Use this branch length to size Section C.

(c) Using the row marked 50 feet (15 240 mm) in Table 402.4(10), Section C, supplying 30 cfh (0.85 m^3/hr) for the dryer requires $^3/_8$-inch tubing.

(4) Section D

(a) The length of tubing from the *point of delivery* to the water heater at the end of Section D is 30 feet (9144 mm), A + D.

(b) Use this branch length to size Section D only.

(c) Using the row marked 30 feet (9144 mm) in Table 402.4(10), Section D, supplying 35 cfh (0.99 m^3/hr) for the water heater requires $^3/_8$-inch tubing.

(5) Section E

(a) The length of tubing from the *point of delivery* to the furnace at the end of Section E is 30 feet (9144 mm), A + E.

(b) Use this branch length to size Section E only.

(c) Using the row marked 30 feet (9144 mm) in Table 402.4(10), Section E, supplying 80 cfh (2.26 m^3/hr) for the furnace requires $^1/_2$-inch tubing.

A.6.4 Example 4: Modification to existing piping system. Determine the required CSST size for Section G (retrofit application) of the *piping* system shown in Figure A.6.4, with a designated pressure drop of 0.5-inch w.c. (125 Pa) using the branch length method. The gas to be used has 0.60 specific gravity and a heating value of 1,000 Btu/ft^3 (37.5 MJ/m^3).

Solution:

(1) The length of pipe and CSST from the *point of delivery* to the retrofit *appliance* (barbecue) at the end of Section G is 40 feet (12 192 mm), A + B + G.

(2) Use this branch length to size Section G.

(3) Assume the CSST manufacturer has tubing sizes or EHDs of 13, 18, 23 and 30.

(4) Using the row marked 40 feet (12 192 mm) in Table 402.4(15), Section G, supplying 40 cfh (1.13 m^3/hr) for the barbecue requires EHD 18 CSST.

(5) The sizing of Sections A, B, F and E must be checked to ensure adequate gas carrying capacity since an

appliance has been added to the *piping* system (see A.6.1 for details).

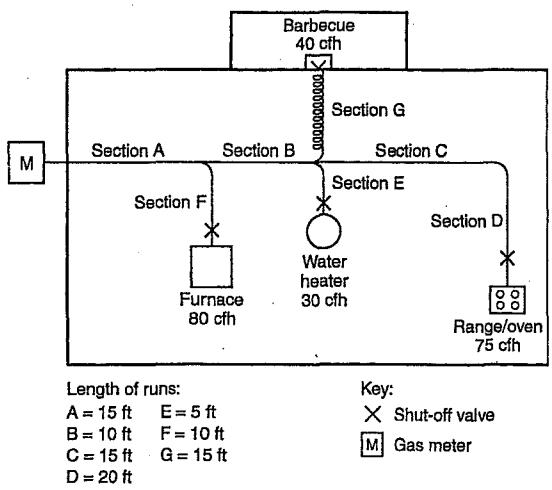

FIGURE A.6.4
PIPING PLAN SHOWING A MODIFICATION TO EXISTING PIPING SYSTEM

A.6.5 Example 5: Calculating pressure drops due to temperature changes. A test *piping* system is installed on a warm autumn afternoon when the temperature is 70°F (21°C). In accordance with local custom, the new *piping* system is subjected to an air pressure test at 20 psig (138 kPa). Overnight, the temperature drops and when the inspector shows up first thing in the morning the temperature is 40°F (4°C).

If the volume of the *piping* system is unchanged, then the formula based on Boyle's and Charles' law for determining the new pressure at a reduced temperature is as follows:

$$\frac{T_1}{T_2} = \frac{P_1}{P_2}$$

where:

T_1 = Initial temperature, absolute ($T_1 + 459$)

T_2 = Final temperature, absolute ($T_2 + 459$)

P_1 = Initial pressure, psia ($P_1 + 14.7$)

P_2 = Final pressure, psia ($P_2 + 14.7$)

$$\frac{(70+459)}{(40+459)} = \frac{(20+14.7)}{(P_2+14.7)}$$

$$\frac{529}{499} = \frac{34.7}{(P_2+14.7)}$$

$$(P_2+14.7) \times \frac{529}{499} = 34.7$$

$$(P_2+14.7) \times \frac{34.7}{1.060}$$

P_2 = 32.7 - 14.7

P_2 = 18 *psig*

Therefore, the gauge could be expected to register 18 psig (124 kPa) when the ambient temperature is 40°F (4°C).

A.6.6 Example 6: Pressure drop per 100 feet of pipe method. Using the layout shown in Figure A.6.1 and ΔH = pressure drop, in w.c. (27.7 in. H_2O = 1 psi), proceed as follows:

(1) Length to A = 20 feet, with 35,000 Btu/hr.

For $^1/_2$-inch pipe, $\Delta H = {}^{20\text{ feet}}/_{100\text{ feet}} \times 0.3$ inch w.c. = 0.06 in w.c.

(2) Length to B = 15 feet, with 75,000 Btu/hr.

For $^3/_4$-inch pipe, $\Delta H = {}^{15\text{ feet}}/_{100\text{ feet}} \times 0.3$ inch w.c. = 0.045 in w.c.

(3) Section 1 = 10 feet, with 110,000 Btu/hr. Here there is a choice:

For 1-inch pipe: $\Delta H = {}^{10\text{ feet}}/_{100\text{ feet}} \times 0.2$ inch w.c. = 0.02 in w.c.

For $^3/_4$-inch pipe: $\Delta H = {}^{10\text{ feet}}/_{100\text{ feet}} \times$ [0.5 inch w.c. + ${}^{(110{,}000\text{ Btu/hr-}104{,}000\text{ Btu/hr})}/_{(147{,}000\text{ Btu/hr-}104{,}000\text{ Btu/hr})} \times$ (1.0 inches w.c. - 0.5 inch w.c.)] = 0.1 × 0.57 inch w.c.≈ 0.06 inch w.c.

Note that the pressure drop between 104,000 Btu/hr and 147,000 Btu/hr has been interpolated as 110,000 Btu/hr.

(4) Section 2 = 20 feet, with 135,000 Btu/hr. Here there is a choice:

For 1-inch pipe: $\Delta H = {}^{20\text{ feet}}/_{100\text{ feet}} \times$ [0.2 inch w.c. + ${}^{(14{,}000\text{ Btu/hr})}/_{(27{,}000\text{ Btu/hr})} \times$ 0.1 inch w.c.] = 0.05 inch w.c.

For $^3/_4$-inch pipe: $\Delta H = {}^{20\text{ feet}}/_{100\text{ feet}} \times 1.0$ inch w.c. = 0.2 inch w.c.

Note that the pressure drop between 121,000 Btu/hr and 148,000 Btu/hr has been interpolated as 135,000 Btu/hr, but interpolation for the ¾-inch pipe (trivial for 104,000 Btu/hr to 147,000 Btu/hr) was not used.

(5) Section 3 = 30 feet, with 245,000 Btu/hr. Here there is a choice:

For 1-inch pipe: $\Delta H = {}^{30\text{ feet}}/_{100\text{ feet}} \times 1.0$ inches w.c. = 0.3 inch w.c.

For $1^1/_4$-inch pipe: $\Delta H = {}^{30\text{ feet}}/_{100\text{ feet}} \times 0.2$ inch w.c. = 0.06 inch w.c.

Note that interpolation for these options is ignored since the table values are close to the 245,000 Btu/hr carried by that section.

(6) The total pressure drop is the sum of the section approaching A, Sections 1 and 3, or either of the following, depending on whether an absolute minimum is needed or the larger drop can be accommodated.

Minimum pressure drop to farthest *appliance*:

ΔH = 0.06 inch w.c. + 0.02 inch w.c. + 0.06 inch w.c. = 0.14 inch w.c.

Larger pressure drop to the farthest *appliance*:

ΔH = 0.06 inch w.c. + 0.06 inch w.c. + 0.3 inch w.c. = 0.42 inch w.c.

Notice that Section 2 and the run to B do not enter into this calculation, provided that the appliances have similar input pressure requirements.

For SI units: 1 Btu/hr = 0.293 W, 1 cubic foot = 0.028 m^3, 1 foot = 0.305 m, 1 inch w.c. = 249 Pa.

APPENDIX B

SIZING OF VENTING SYSTEMS SERVING APPLIANCES EQUIPPED WITH DRAFT HOODS, CATEGORY I APPLIANCES, AND APPLIANCES LISTED FOR USE WITH TYPE B VENTS

(This appendix is informative and is not part of the *code*. This appendix is an excerpt from the 2015 *International Fuel Gas Code,* coordinated with the section numbering of the *International Residential Code.*)

EXAMPLES USING SINGLE APPLIANCE VENTING TABLES

Example 1: Single draft-hood-equipped appliance.

An installer has a 120,000 British thermal unit (Btu) per hour input *appliance* with a 5-inch-diameter draft hood outlet that needs to be vented into a 10-foot-high Type B vent system. What size vent should be used assuming (a) a 5-foot lateral single-wall metal vent connector is used with two 90-degree elbows, or (b) a 5-foot lateral single-wall metal vent connector is used with three 90-degree elbows in the vent system?

Solution:

Table 504.2(2) should be used to solve this problem, because single-wall metal vent connectors are being used with a Type B vent.

(a) Read down the first column in Table 504.2(2) until the row associated with a 10-foot height and 5-foot lateral is found. Read across this row until a vent capacity greater than 120,000 Btu per hour is located in the shaded columns *labeled* "NAT Max" for draft-hood-equipped appliances. In this case, a 5-inch-diameter vent has a capacity of 122,000 Btu per hour and can be used for this application.

(b) If three 90-degree elbows are used in the vent system, then the maximum vent capacity listed in the tables must be reduced by 10 percent (see Section 504.2.3 for single *appliance* vents). This implies that the 5-inch-diameter vent has an adjusted capacity of only 110,000 Btu per hour. In this case, the vent system must be increased to 6 inches in diameter (see calculations below).

122,000 (0.90) = 110,000 for 5-inch vent
From Table 504.2(2), Select 6-inch vent
186,000 (0.90) = 167,000; This is greater than the required 120,000. Therefore, use a 6-inch vent and connector where three elbows are used.

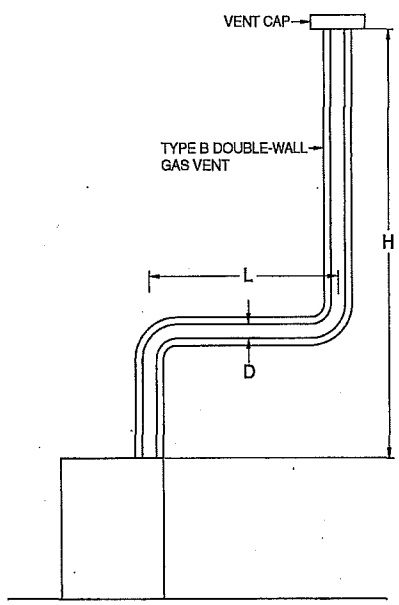

For SI: 1 foot = 304.8 mm, 1 British thermal unit per hour = 0.2931 W.

Table 504.2(1) is used when sizing Type B double-wall gas vent connected directly to the appliance.

Note: The appliance may be either Category I draft hood equipped or fan-assisted type.

FIGURE B-1
TYPE B DOUBLE-WALL VENT SYSTEM SERVING A SINGLE APPLIANCE WITH A TYPE B DOUBLE-WALL VENT

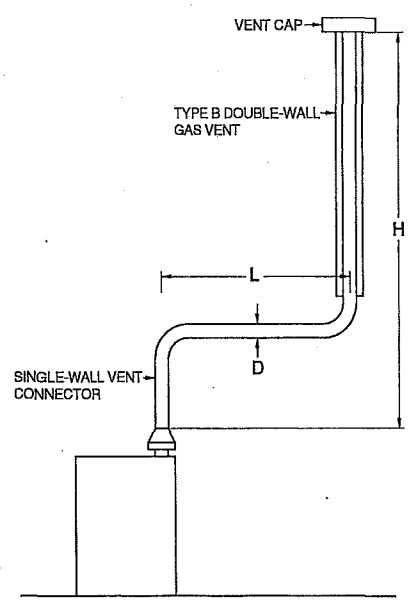

For SI: 1 foot = 304.8 mm, 1 British thermal unit per hour = 0.2931 W.

Table 504.2(2) is used when sizing a single-wall metal vent connector attached to a Type B double-wall gas vent.

Note: The appliance may be either Category I draft hood equipped or fan-assisted type.

FIGURE B-2
TYPE B DOUBLE-WALL VENT SYSTEM SERVING A SINGLE APPLIANCE WITH A SINGLE-WALL METAL VENT CONNECTOR

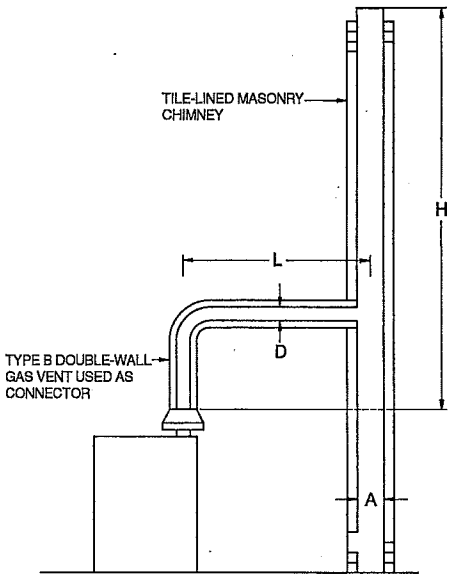

Table 504.2(3) is used when sizing a Type B double-wall gas vent connector attached to a tile-lined masonry chimney.

Note: "A" is the equivalent cross-sectional area of the tile liner.

Note: The appliance can be either Category I draft hood equipped or fan-assisted type.

FIGURE B-3
VENT SYSTEM SERVING A SINGLE APPLIANCE WITH A MASONRY CHIMNEY OF TYPE B DOUBLE-WALL VENT CONNECTOR

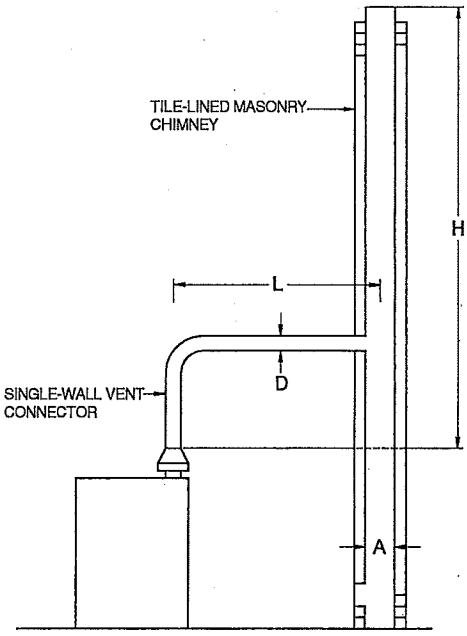

Table 504.2(4) is used when sizing a single-wall vent connector attached to a tile-lined masonry chimney.

Note: "A" is the equivalent cross-sectional area of the tile liner.

Note: The appliance can be either Category I draft hood equipped or fan-assisted type.

FIGURE B-4
VENT SYSTEM SERVING A SINGLE APPLIANCE USING A MASONRY CHIMNEY AND A SINGLE-WALL METAL VENT CONNECTOR

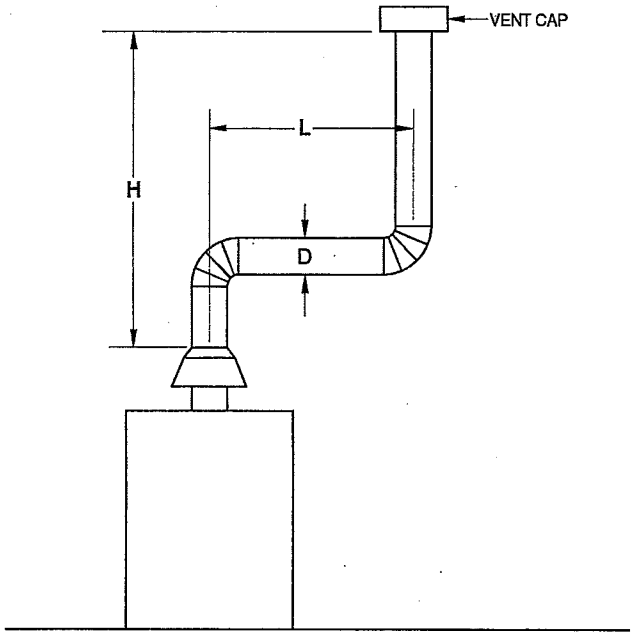

Asbestos cement Type B or single-wall metal vent serving a single draft-hood-equipped appliance [see Table 504.2(5)].

FIGURE B-5
ASBESTOS CEMENT TYPE B OR SINGLE-WALL METAL VENT SYSTEM SERVING A SINGLE DRAFT-HOOD-EQUIPPED APPLIANCE

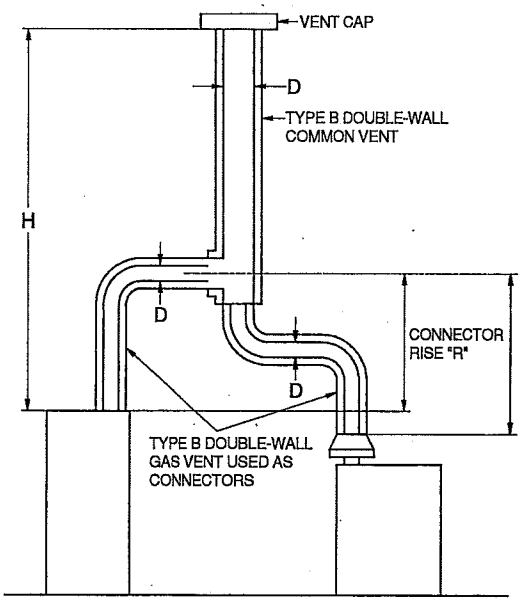

Table 504.3(1) is used when sizing Type B double-wall vent connectors attached to a Type B double-wall common vent.

Note: Each appliance can be either Category I draft hood equipped or fan-assisted type.

FIGURE B-6
VENT SYSTEM SERVING TWO OR MORE APPLIANCES WITH TYPE B DOUBLE-WALL VENT AND TYPE B DOUBLE-WALL VENT CONNECTOR

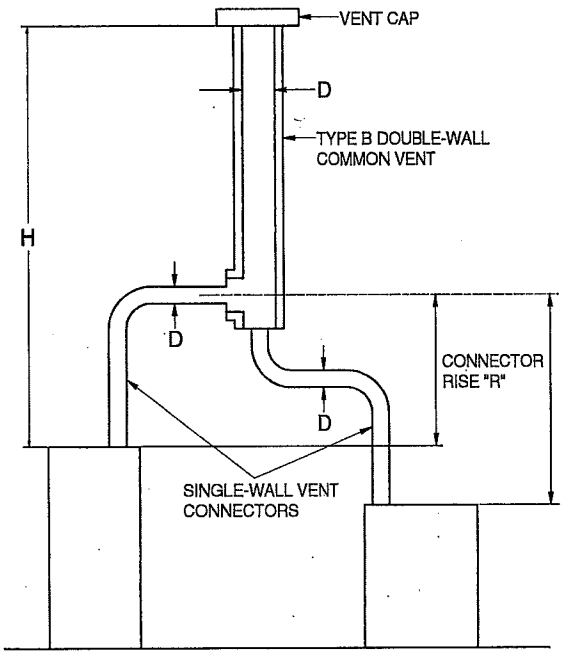

Table 504.3(2) is used when sizing single-wall vent connectors attached to a Type B double-wall common vent.

Note: Each appliance can be either Category I draft hood equipped or fan-assisted type.

FIGURE B-7
VENT SYSTEM SERVING TWO OR MORE APPLIANCES WITH TYPE B DOUBLE-WALL VENT AND SINGLE-WALL METAL VENT CONNECTORS

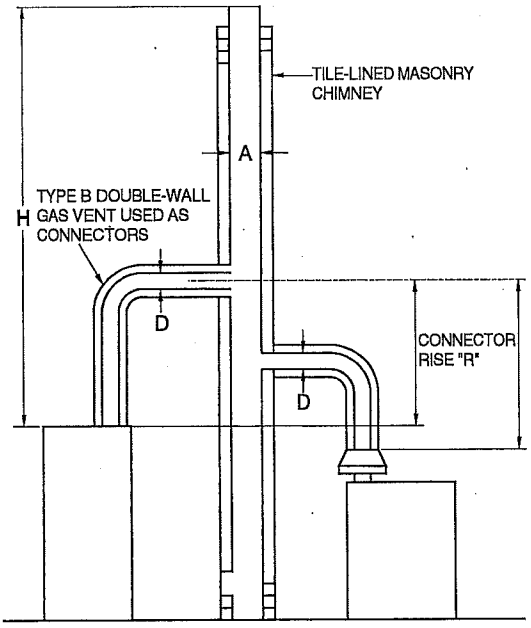

Table 504.3(3) is used when sizing Type B double-wall vent connectors attached to a tile-lined masonry chimney.

Note: "A" is the equivalent cross-sectional area of the tile liner.

Note: Each appliance can be either Category I draft hood equipped or fan-assisted type.

FIGURE B-8
MASONRY CHIMNEY SERVING TWO OR MORE APPLIANCES WITH TYPE B DOUBLE-WALL VENT CONNECTOR

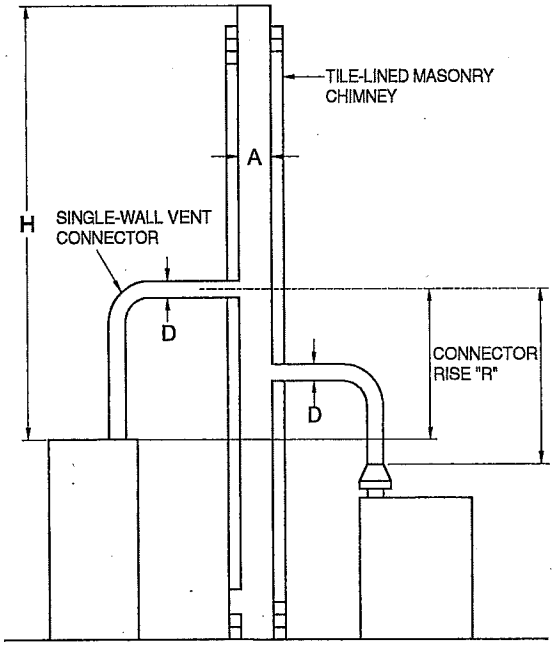

Table 504.3(4) is used when sizing single-wall metal vent connectors attached to a tile-lined masonry chimney.

Note: "A" is the equivalent cross-sectional area of the tile liner.

Note: Each appliance can be either Category I draft hood equipped or fan-assisted type.

FIGURE B-9
MASONRY CHIMNEY SERVING TWO OR MORE APPLIANCES WITH SINGLE-WALL METAL VENT CONNECTORS

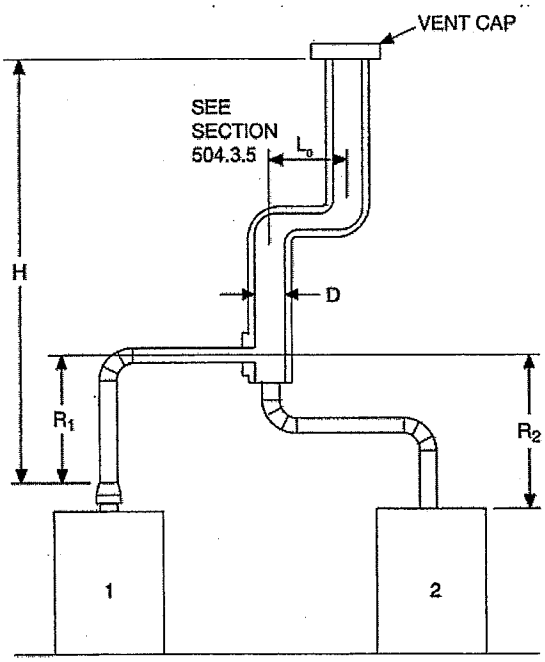

Asbestos cement Type B or single-wall metal pipe vent serving two or more draft-hood-equipped appliances [see Table 504.3(5)].

FIGURE B-10
ASBESTOS CEMENT TYPE B OR SINGLE-WALL METAL VENT SYSTEM SERVING TWO OR MORE DRAFT-HOOD-EQUIPPED APPLIANCES

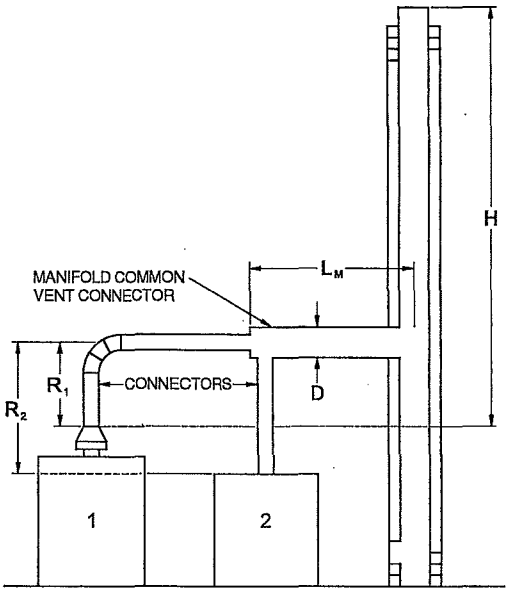

Example: Manifolded Common Vent Connector L_M shall be no greater than 18 times the common vent connector manifold inside diameter; i.e., a 4-inch (102 mm) inside diameter common vent connector manifold shall not exceed 72 inches (1829 mm) in length (see Section 504.3.4).

Note: This is an illustration of a typical manifolded vent connector. Different appliance, vent connector, or common vent types are possible. Consult Section 502.3.

FIGURE B-11
USE OF MANIFOLD COMMON VENT CONNECTOR

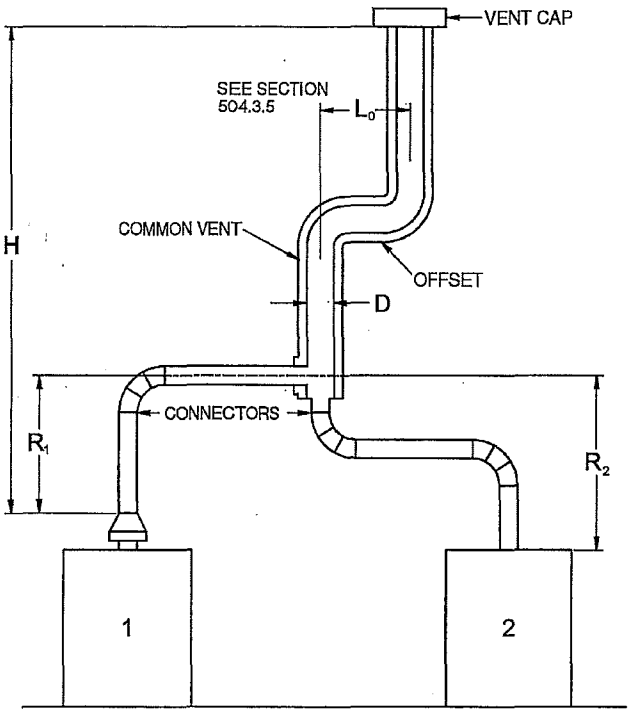

Example: Offset Common Vent

Note: This is an illustration of a typical offset vent. Different appliance, vent connector, or vent types are possible. Consult Sections 504.2 and 504.3.

FIGURE B-12
USE OF OFFSET COMMON VENT

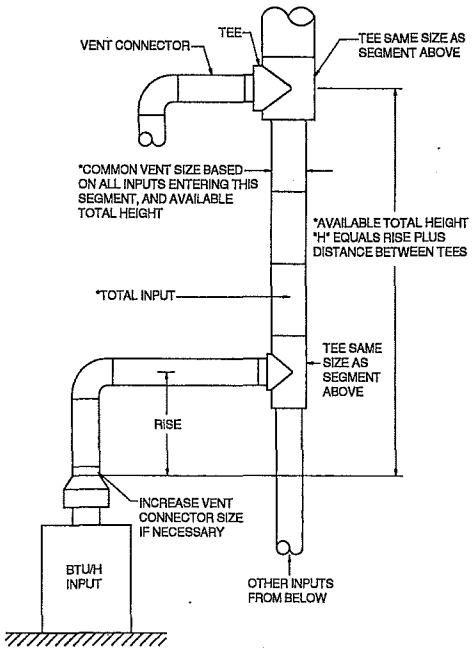

Vent connector size depends on:
- Input
- Rise
- Available total height "H"
- Table 504.3(1) connectors

Common vent size depends on:
- Combined inputs
- Available total height "H"
- Table 504.3(1) common vent

FIGURE B-13
MULTISTORY GAS VENT DESIGN PROCEDURE FOR EACH SEGMENT OF SYSTEM

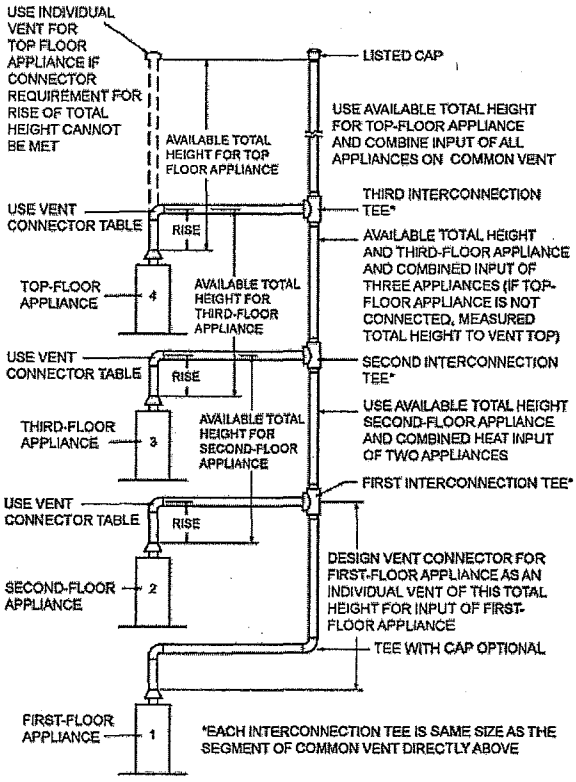

Principles of design of multistory vents using vent connector and common vent design tables (see Sections 504.3.11 through 504.3.17).

FIGURE B-14
MULTISTORY VENT SYSTEMS

3254

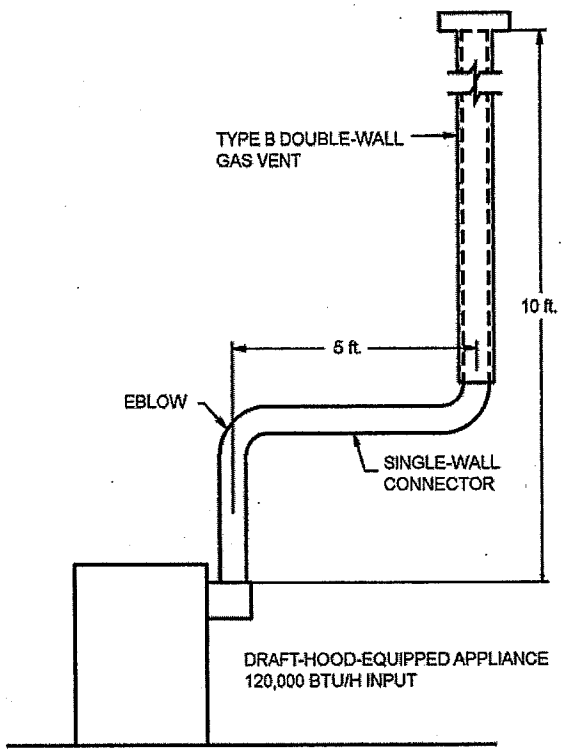

For SI: 1 foot = 304.8 mm, 1 British thermal unit per hour = 0.2931 W.

FIGURE B-15 (EXAMPLE 1)
SINGLE DRAFT-HOOD-EQUIPPED APPLIANCE

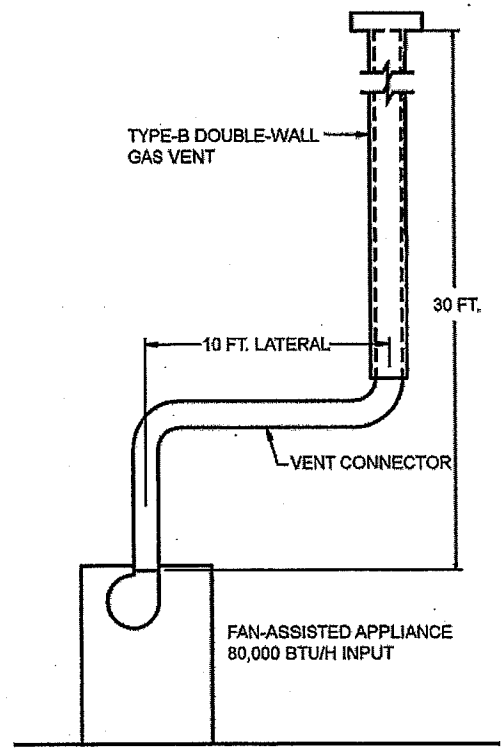

For SI: 1 foot = 304.8 mm, 1 British thermal unit per hour = 0.2931 W.

FIGURE B-16 (EXAMPLE 2)
SINGLE FAN-ASSISTED APPLIANCE

Example 2: Single fan-assisted appliance.

An installer has an 80,000 Btu per hour input fan-assisted *appliance* that must be installed using 10 feet of lateral connector attached to a 30-foot-high Type B vent. Two 90-degree elbows are needed for the installation. Can a single-wall metal vent connector be used for this application?

Solution:

Table 504.2(2) refers to the use of single-wall metal vent connectors with Type B vent. In the first column find the row associated with a 30-foot height and a 10-foot lateral. Read across this row, looking at the FAN Min and FAN Max columns, to find that a 3-inch-diameter single-wall metal vent connector is not recommended. Moving to the next larger size single wall connector (4 inches), note that a 4-inch-diameter single-wall metal connector has a recommended minimum vent capacity of 91,000 Btu per hour and a recommended maximum vent capacity of 144,000 Btu per hour. The 80,000 Btu per hour fan-assisted *appliance* is outside this range, so the conclusion is that a single-wall metal vent connector cannot be used to vent this *appliance* using 10 feet of lateral for the connector.

However, if the 80,000 Btu per hour input *appliance* could be moved to within 5 feet of the vertical vent, then a 4-inch single-wall metal connector could be used to vent the *appliance*. Table 504.2(2) shows the acceptable range of vent capacities for a 4-inch vent with 5 feet of lateral to be between 72,000 Btu per hour and 157,000 Btu per hour.

If the *appliance* cannot be moved closer to the vertical vent, then Type B vent could be used as the connector material. In this case, Table 504.2(1) shows that for a 30-foot-high vent with 10 feet of lateral, the acceptable range of vent capacities for a 4-inch-diameter vent attached to a fan-assisted *appliance* is between 37,000 Btu per hour and 150,000 Btu per hour.

Example 3: Interpolating between table values.

An installer has an 80,000 Btu per hour input *appliance* with a 4-inch-diameter draft hood outlet that needs to be vented into a 12-foot-high Type B vent. The vent connector has a 5-foot lateral length and is also Type B. Can this *appliance* be vented using a 4-inch-diameter vent?

Solution:

Table 504.2(1) is used in the case of an all Type B vent system. However, since there is no entry in Table 504.2(1) for a height of 12 feet, interpolation must be used. Read down the 4-inch diameter NAT Max column to the row associated with 10-foot height and 5-foot lateral to find the capacity value of 77,000 Btu per hour. Read further down to the 15-foot height, 5-foot lateral row to find the capacity value of 87,000 Btu per hour. The difference between the 15-foot height capacity value and the 10-foot height capacity value is 10,000 Btu per hour. The capacity for a vent system with a 12-foot height is equal to the capacity for a 10-foot height plus $^2/_5$ of the difference between the 10-foot and 15-foot height values, or $77{,}000 + {}^2/_5\,(10{,}000) = 81{,}000$ Btu per hour. Therefore, a 4-inch-diameter vent can be used in the installation.

EXAMPLES USING COMMON VENTING TABLES

Example 4: Common venting two draft-hood-equipped appliances.

A 35,000 Btu per hour water heater is to be common vented with a 150,000 Btu per hour furnace using a common vent with a total height of 30 feet. The connector rise is 2 feet for the water heater with a horizontal length of 4 feet. The connector rise for the furnace is 3 feet with a horizontal length of 8 feet. Assume single-wall metal connectors will be used with Type B vent. What size connectors and combined vent should be used in this installation?

Solution:

Table 504.3(2) should be used to size single-wall metal vent connectors attached to Type B vertical vents. In the vent connector capacity portion of Table 504.3(2), find the row associated with a 30-foot vent height. For a 2-foot rise on the vent connector for the water heater, read the shaded columns for draft-hood-equipped appliances to find that a 3-inch-diameter vent connector has a capacity of 37,000 Btu per hour. Therefore, a 3-inch single-wall metal vent connector can be used with the water heater. For a draft-hood-equipped furnace with a 3-foot rise, read across the appropriate row to find that a 5-inch-diameter vent connector has a maximum capacity of 120,000 Btu per hour (which is too small for the furnace) and a 6-inch-diameter vent connector has a maximum vent capacity of 172,000 Btu per hour. Therefore, a 6-inch-diameter vent connector should be used with the 150,000 Btu per hour furnace. Since both vent connector horizontal lengths are less than the maximum lengths *listed* in Section 504.3.2, the table values can be used without adjustments.

In the common vent capacity portion of Table 504.3(2), find the row associated with a 30-foot vent height and read over to the NAT + NAT portion of the 6-inch-diameter column to find a maximum combined capacity of 257,000 Btu per hour. Since the two appliances total only 185,000 Btu per hour, a 6-inch common vent can be used.

Example 5a: Common venting a draft-hood-equipped water heater with a fan-assisted furnace into a Type B vent.

In this case, a 35,000 Btu per hour input draft-hood-equipped water heater with a 4-inch-diameter draft hood *outlet*, 2 feet of connector rise, and 4 feet of horizontal length is to be common vented with a 100,000 Btu per hour fan-assisted furnace with a 4-inch-diameter flue collar, 3 feet of connector rise, and 6 feet of horizontal length. The common vent consists of a 30-foot height of Type B vent. What are the recommended vent diameters for each connector and the common vent? The installer would like to use a single-wall metal vent connector.

Solution: [Table 504.3(2)].

Water Heater Vent Connector Diameter. Since the water heater vent connector horizontal length of 4 feet is less than the maximum value listed in Section 504.3.2, the venting table values can be used without adjustments. Using the Vent Connector Capacity portion of Table 504.3(2), read down the Total Vent Height (*H*) column to 30 feet and read across the 2-foot Connector Rise (*R*) row to the first Btu per hour rating in the NAT Max column that is equal to or greater than the water heater input rating. The table shows that a 3-inch vent connector has a maximum input rating of 37,000 Btu per

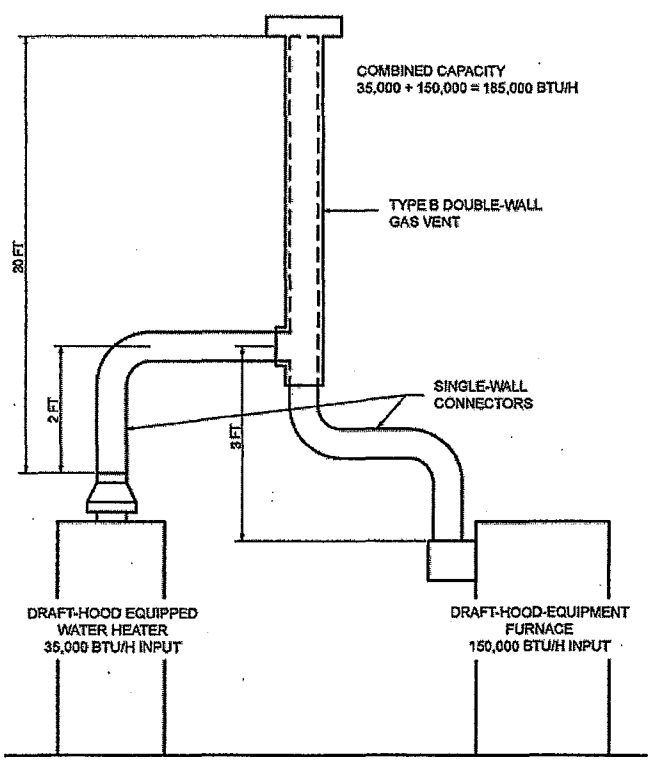

FIGURE B-17 (EXAMPLE 4)
COMMON VENTING TWO DRAFT-HOOD-EQUIPPED APPLIANCES

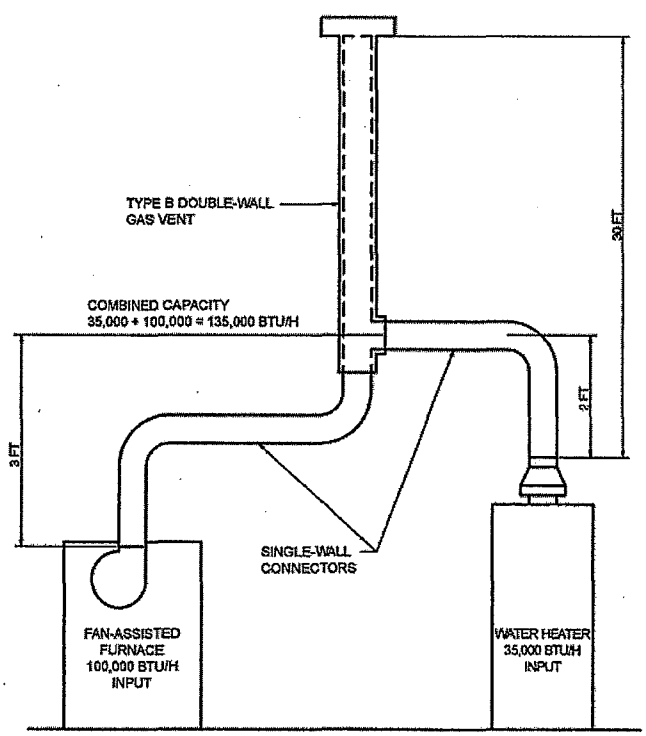

FIGURE B-18 (EXAMPLE 5A)
COMMON VENTING A DRAFT HOOD WITH A FAN-ASSISTED FURNACE INTO A TYPE B DOUBLE-WALL COMMON VENT

3256

hour. Although this is greater than the water heater input rating, a 3-inch vent connector is prohibited by Section 504.3.21. A 4-inch vent connector has a maximum input rating of 67,000 Btu per hour and is equal to the draft hood *outlet* diameter. A 4-inch vent connector is selected. Since the water heater is equipped with a draft hood, there are no minimum input rating restrictions.

Furnace Vent Connector Diameter. Using the Vent Connector Capacity portion of Table 504.3(2), read down the Total Vent Height (*H*) column to 30 feet and across the 3-foot Connector Rise (*R*) row. Since the furnace has a fan-assisted combustion system, find the first FAN Max column with a Btu per hour rating greater than the furnace input rating. The 4-inch vent connector has a maximum input rating of 119,000 Btu per hour and a minimum input rating of 85,000 Btu per hour. The 100,000 Btu per hour furnace in this example falls within this range, so a 4-inch connector is adequate. Since the furnace vent connector horizontal length of 6 feet does not exceed the maximum value listed in Section 504.3.2, the venting table values can be used without adjustment. If the furnace had an input rating of 80,000 Btu per hour, then a Type B vent connector [see Table 504.3(1)] would be needed in order to meet the minimum capacity limit.

Common Vent Diameter. The total input to the common vent is 135,000 Btu per hour. Using the Common Vent Capacity portion of Table 504.3(2), read down the Total Vent Height (*H*) column to 30 feet and across this row to find the smallest vent diameter in the FAN + NAT column that has a Btu per hour rating equal to or greater than 135,000 Btu per hour. The 4-inch common vent has a capacity of 132,000 Btu per hour and the 5-inch common vent has a capacity of 202,000 Btu per hour. Therefore, the 5-inch common vent should be used in this example.

Summary. In this example, the installer can use a 4-inch-diameter, single-wall metal vent connector for the water heater and a 4-inch-diameter, single-wall metal vent connector for the furnace. The common vent should be a 5-inch-diameter Type B vent.

Example 5b: Common venting into a masonry chimney.

In this case, the water heater and fan-assisted furnace of Example 5a are to be common vented into a clay tile-lined masonry chimney with a 30-foot height. The chimney is not exposed to the outdoors below the roof line. The internal dimensions of the clay tile liner are nominally 8 inches by 12 inches. Assuming the same vent connector heights, laterals, and materials found in Example 5a, what are the recommended vent connector diameters, and is this an acceptable installation?

Solution:

Table 504.3(4) is used to size common venting installations involving single-wall connectors into masonry chimneys.

Water Heater Vent Connector Diameter. Using Table 504.3(4), Vent Connector Capacity, read down the Total Vent Height (*H*) column to 30 feet, and read across the 2-foot Connector Rise (*R*) row to the first Btu per hour rating in the NAT Max column that is equal to or greater than the water heater input rating. The table shows that a 3-inch vent connector has a maximum input of only 31,000 Btu per hour while a 4-inch vent connector has a maximum input of 57,000 Btu per hour. A 4-inch vent connector must therefore be used.

Furnace Vent Connector Diameter. Using the Vent Connector Capacity portion of Table 504.3(4), read down the Total Vent Height (*H*) column to 30 feet and across the 3-foot Connector Rise (*R*) row. Since the furnace has a fan-assisted combustion system, find the first FAN Max column with a Btu per hour rating greater than the furnace input rating. The 4-inch vent connector has a maximum input rating of 127,000 Btu per hour and a minimum input rating of 95,000 Btu per hour. The 100,000 Btu per hour furnace in this example falls within this range, so a 4-inch connector is adequate.

Masonry Chimney. From Table B-1, the equivalent area for a nominal liner size of 8 inches by 12 inches is 63.6 square inches. Using Table 504.3(4), Common Vent Capacity, read down the FAN + NAT column under the Minimum Internal Area of Chimney value of 63 to the row for 30-foot height to find a capacity value of 739,000 Btu per hour. The combined input rating of the furnace and water heater, 135,000 Btu per hour, is less than the table value, so this is an acceptable installation.

Section 504.3.17 requires the common vent area to be no greater than seven times the smallest *listed appliance* categorized vent area, flue collar area, or draft hood outlet area. Both appliances in this installation have 4-inch-diameter outlets. From Table B-1, the equivalent area for an inside diameter of 4 inches is 12.2 square inches. Seven times 12.2 equals 85.4, which is greater than 63.6, so this configuration is acceptable.

Example 5c: Common venting into an exterior masonry chimney.

In this case, the water heater and fan-assisted furnace of Examples 5a and 5b are to be common vented into an exterior masonry chimney. The chimney height, clay tile liner dimensions, and vent connector heights and laterals are the same as in Example 5b. This system is being installed in Charlotte, North Carolina. Does this exterior masonry chimney need to be relined? If so, what corrugated metallic liner size is recommended? What vent connector diameters are recommended?

Solution:

In accordance with Section 504.3.20, Type B vent connectors are required to be used with exterior masonry chimneys. Use Tables 504.3(7a), (7b) to size FAN+NAT common venting installations involving Type-B double wall connectors into exterior masonry chimneys.

The local 99-percent winter design temperature needed to use Table 504.3(7b) can be found in the ASHRAE *Handbook of Fundamentals*. For Charlotte, North Carolina, this design temperature is 19°F.

Chimney Liner Requirement. As in Example 5b, use the 63 square inch Internal Area columns for this size clay tile liner. Read down the 63 square inch column of Table 504.3(7a) to the 30-foot height row to find that the combined *appliance* maximum input is 747,000 Btu per hour. The combined input rating of the appliances in this installation, 135,000 Btu per hour, is less than the maximum value, so this

criterion is satisfied. Table 504.3(7b), at a 19°F design temperature, and at the same vent height and internal area used above, shows that the minimum allowable input rating of a space-heating appliance is 470,000 Btu per hour. The furnace input rating of 100,000 Btu per hour is less than this minimum value. So this criterion is not satisfied, and an alternative venting design needs to be used, such as a Type B vent shown in Example 5a or a *listed* chimney liner system shown in the remainder of the example.

In accordance with Section 504.3.19, Table 504.3(1) or 504.3(2) is used for sizing corrugated metallic liners in masonry chimneys, with the maximum common vent capacities reduced by 20 percent. This example will be continued assuming Type B vent connectors.

Water Heater Vent Connector Diameter. Using Table 504.3(1), Vent Connector Capacity, read down the Total Vent Height (*H*) column to 30 feet, and read across the 2-foot Connector Rise (*R*) row to the first Btu/h rating in the NAT Max column that is equal to or greater than the water heater input rating. The table shows that a 3-inch vent connector has a maximum capacity of 39,000 Btu/h. Although this rating is greater than the water heater input rating, a 3-inch vent connector is prohibited by Section 504.3.21. A 4-inch vent connector has a maximum input rating of 70,000 Btu/h and is equal to the draft hood outlet diameter. A 4-inch vent connector is selected.

Furnace Vent Connector Diameter. Using Table 504.3(1), Vent Connector Capacity, read down the Vent Height (*H*) column to 30 feet, and read across the 3-foot Connector Rise (*R*) row to the first Btu per hour rating in the FAN Max column that is equal to or greater than the furnace input rating. The 100,000 Btu per hour furnace in this example falls within this range, so a 4-inch connector is adequate.

Chimney Liner Diameter. The total input to the common vent is 135,000 Btu per hour. Using the Common Vent Capacity Portion of Table 504.3(1), read down the Vent Height (*H*) column to 30 feet and across this row to find the smallest vent diameter in the FAN+NAT column that has a Btu per hour rating greater than 135,000 Btu per hour. The 4-inch common vent has a capacity of 138,000 Btu per hour. Reducing the maximum capacity by 20 percent (Section 504.3.19) results in a maximum capacity for a 4-inch corrugated liner of 110,000 Btu per hour, less than the total input of 135,000 Btu per hour. So a larger liner is needed. The 5-inch common vent capacity *listed* in Table 504.3(1) is 210,000 Btu per hour, and after reducing by 20 percent is 168,000 Btu per hour. Therefore, a 5-inch corrugated metal liner should be used in this example.

Single-Wall Connectors. Once it has been established that relining the chimney is necessary, Type B double-wall vent connectors are not specifically required. This example could be redone using Table 504.3(2) for single-wall vent connectors. For this case, the vent connector and liner diameters would be the same as found above with Type B double-wall connectors.

TABLE B-1
MASONRY CHIMNEY LINER DIMENSIONS WITH CIRCULAR EQUIVALENTS[a]

NOMINAL LINER SIZE (inches)	INSIDE DIMENSIONS OF LINER (inches)	INSIDE DIAMETER OR EQUIVALENT DIAMETER (inches)	EQUIVALENT AREA (square inches)
4 × 8	$2^1/_2 \times 6^1/_2$	4	12.2
		5	19.6
		6	28.3
		7	38.3
8 × 8	$6^3/_4 \times 6^3/_4$	7.4	42.7
		8	50.3
8 × 12	$6^1/_2 \times 10^1/_2$	9	63.6
		10	78.5
12 × 12	$9^3/_4 \times 9^3/_4$	10.4	83.3
		11	95
12 × 16	$9^1/_2 \times 13^1/_2$	11.8	107.5
		12	113.0
		14	153.9
16 × 16	$13^1/_4 \times 13^1/_4$	14.5	162.9
		15	176.7
16 × 20	13 × 17	16.2	206.1
		18	254.4
20 × 20	$16^3/_4 \times 16^3/_4$	18.2	260.2
		20	314.1
20 × 24	$16^1/_2 \times 20^1/_2$	20.1	314.2
		22 ×	380.1
24 × 24	$20^1/_4 \times 20^1/_4$	22.1	380.1
		24	452.3
24 × 28	$20^1/_4 \times 20^1/_4$	24.1	456.2
28 × 28	$24^1/_4 \times 24^1/_4$	26.4	543.3
		27	572.5
30 × 30	$25^1/_2 \times 25^1/_2$	27.9	607
		30	706.8
30 × 36	$25^1/_2 \times 31^1/_2$	30.9	749.9
		33	855.3
36 × 36	$31^1/_2 \times 31^1/_2$	34.4	929.4
		36	1017.9

For SI: 1 inch = 25.4 mm, 1 square inch = 645.16 m^2.

a. Where liner sizes differ dimensionally from those shown in Table B-1, equivalent diameters can be determined from published tables for square and rectangular ducts of equivalent carrying capacity or by other engineering methods.

3258

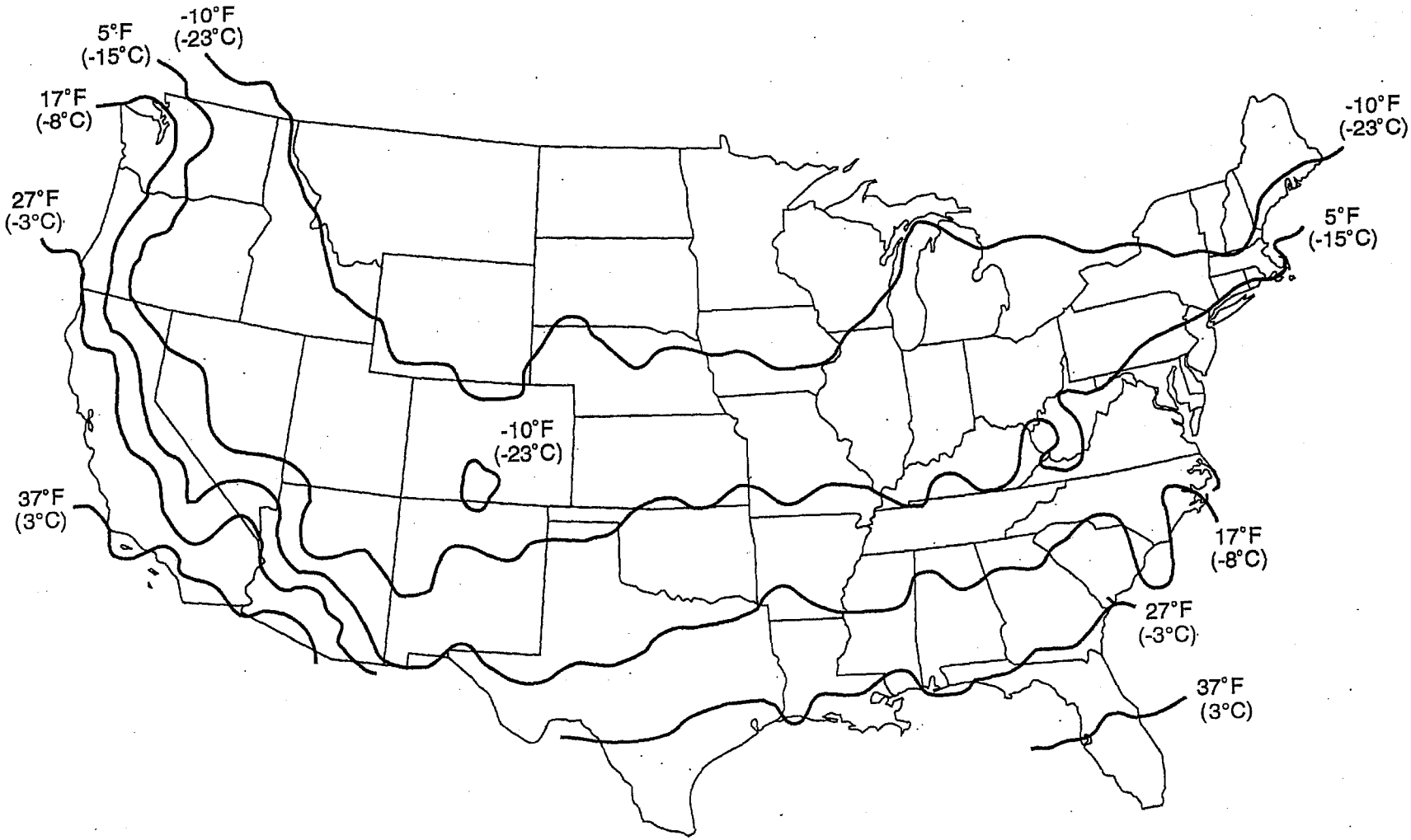
5°F
(-15°C)
-10°F
(-23°C)
17°F
(-8°C)
27°F
(-3°C)
37°F
(3°C)
-10°F
(-23°C)
-10°F
(-23°C)
5°F
(-15°C)
17°F
(-8°C)
27°F
(-3°C)
37°F
(3°C)

FIGURE B-19

APPENDIX C

EXIT TERMINALS OF MECHANICAL DRAFT AND DIRECT-VENT VENTING SYSTEMS

(This appendix is informative and is not part of the code. This appendix is an excerpt from the 2015 *International Fuel Gas Code,* coordinated with the section numbering of the *International Residential Code.*)

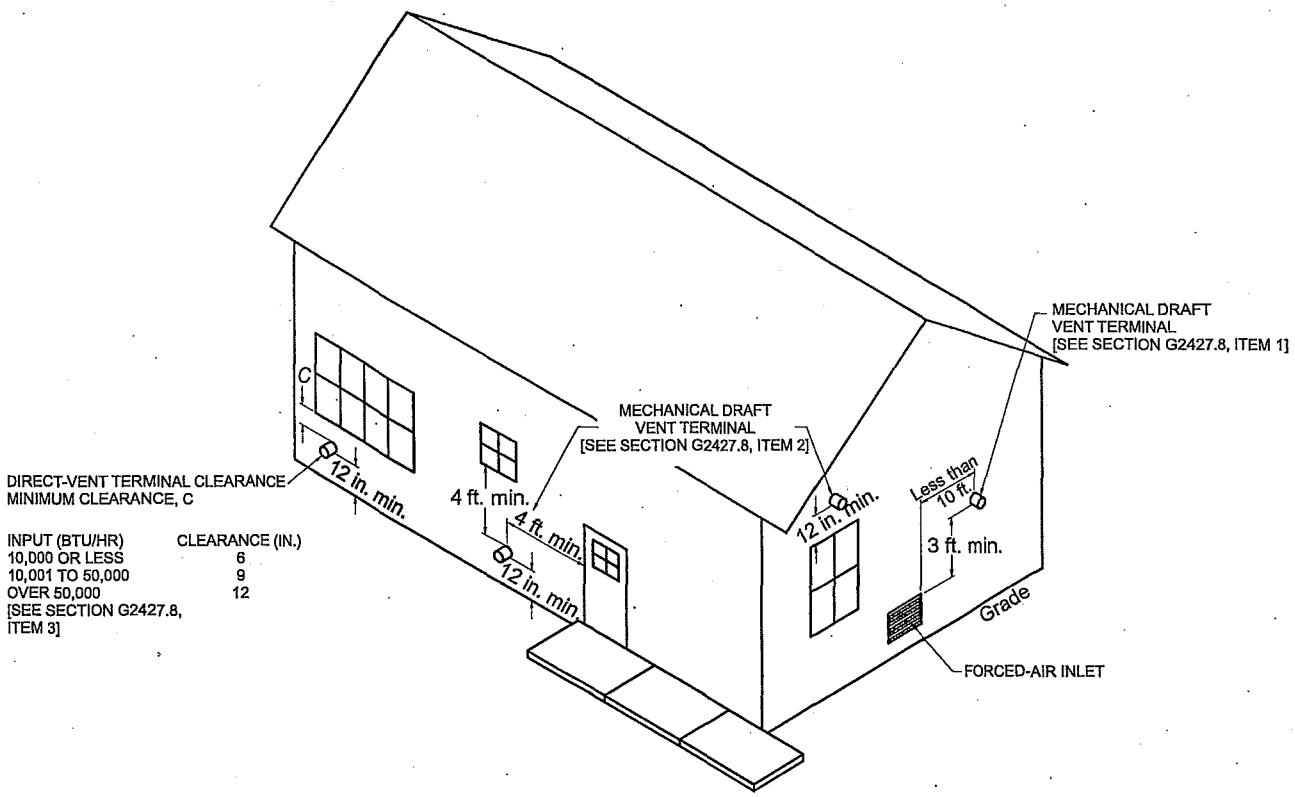

For SI: 1 inch = 25.4 mm, 1 foot = 304.8 mm, 1 British thermal unit per hour = 0.2931 W.

APPENDIX D

RECOMMENDED PROCEDURE FOR SAFETY INSPECTION OF AN EXISTING APPLIANCE INSTALLATION

(This appendix is not a part of the requirements of this code and is included for informational purposes only.)
(This appendix is an excerpt from the 2015 International Fuel Gas Code, coordinated with the section numbering of the International Residential Code.)

D.1 General. The following procedure is intended as a guide to aid in determining that an appliance is properly installed and is in a safe condition for continued use. Where a gas supplier performs an inspection, their written procedures should be followed.

D.1.1 Application. This procedure is intended for existing residential installations of a furnace, boiler, room heater, water heater, cooking appliance, fireplace appliance and clothes dryer. This procedure should be performed prior to any attempt to modify the appliance installation or building envelope.

D.1.2 Weatherization Programs. Before a building envelope is to be modified as part of a weatherization program, the existing appliance installation should be inspected in accordance with these procedures. After all unsafe conditions are repaired, and immediately after the weatherization is complete, the appliance inspections in D.5.2 are to be repeated.

D.1.3 Inspection Procedure. The safety of the building occupant and inspector are to be determined as the first step as described in D.2. Only after the ambient environment is found to be safe should inspections of gas piping and appliances be undertaken. It is recommended that all inspections described in D.3, D.4, and D.6, where the appliance is in the off mode, be completed and any unsafe conditions repaired or corrected before continuing with inspections of an operating appliance described in D.5 and D.6.

D.1.4 Manufacturer Instructions. Where available, the manufacturer's installation and operating instructions for the installed appliances should be used as part of these inspection procedures to determine if it is installed correctly and is operating properly.

D.1.5 Instruments. The inspection procedures include measuring for fuel gas and carbon monoxide (CO) and will require the use of a combustible gas detector (CGD) and a CO detector. It is recommended that both types of detectors be listed. Prior to any inspection, the detectors should be calibrated or tested in accordance with the manufacturer's instructions. In addition, it is recommended that the detectors have the following minimum specifications.

(1) Gas Detector: The CGD should be capable of indicating the presence of the type of fuel gas for which it is to be used (e.g. natural gas or propane). The combustible gas detector should be capable of the following:

a. *PPM:* Numeric display with a parts per million (ppm) scale from 1ppm to 900 ppm in 1 ppm increments.

b. *LEL:* Numeric display with a percent lower explosive limit (% LEL) scale from 0 percent to 100 percent in 1 percent increments.

c. *Audio:* An audio sound feature to locate leaks.

(2) CO Detector: The CO detector should be capable of the following functions and have a numeric display scale as follows:

a. *PPM:* For measuring ambient room and appliance emissions a display scale in parts per million (ppm) from 0 to 1,000 ppm in 1 ppm increments.

b. *Alarm:* A sound alarm function where hazardous levels of ambient CO is found (see D.2 for alarm levels)

c. *Air Free:* Capable of converting CO measurements to an air free level in ppm. Where a CO detector is used without an air free conversion function, the CO air free can be calculated in accordance with footnote 3 in Table D.6.

D.2 Occupant and Inspector Safety. Prior to entering a building, the inspector should have both a combustible gas detector (CGD) and CO detector turned on, calibrated, and operating. Immediately upon entering the building, a sample of the ambient atmosphere should be taken. Based on CGD and CO detector readings, the inspector should take the following actions:

(1) The CO detector indicates a carbon monoxide level of 70 ppm or greater [1]. The inspector should immediately notify the occupant of the need for themselves and any building occupant to evacuate; the inspector shall immediately evacuate and call 911.

(2) Where the CO detector indicates a reading between 30 ppm and 70 ppm[1]. The inspector should advise the

[1] U.S. Consumer Product Safety Commission, *Responding to Residential Carbon Monoxide Incidents, Guidelines For Fire and Other Emergency Response Personnel*, Approved 7/23/02

occupant that high CO levels have been found and recommend that all possible sources of CO should be turned off immediately and windows and doors opened. Where it appears that the source of CO is a permanently installed appliance, advise the occupant to keep the appliance off and have the appliance serviced by a qualified servicing agent.

(3) Where CO detector indicates CO below 30 ppm[1] the inspection can continue.

(4) The CGD indicates a combustible gas level of 20% LEL or greater. The inspector should immediately notify the occupant of the need for themselves and any building occupant to evacuate; the inspector shall immediately evacuate and call 911.

(5) The CGD indicates a combustible gas level below 20% LEL, the inspection can continue.

If during the inspection process it is determined a condition exists that could result in unsafe appliance operation, shut off the appliance and advise the owner of the unsafe condition. Where a gas leak is found that could result in an unsafe condition, advise the owner of the unsafe condition and call the gas supplier to turn off the gas supply. The inspector should not continue a safety inspection on an operating appliance, venting system, and piping system until repairs have been made.

D.3 Gas Piping and Connection Inspections.

(1) Leak Checks. Conduct a test for gas leakage using either a non-corrosive leak detection solution or a CGD confirmed with a leak detection solution.

The preferred method for leak checking is by use of gas leak detection solution applied to all joints. This method provides a reliable visual indication of significant leaks.

The use of a CGD in its audio sensing mode can quickly locate suspect leaks but can be overly sensitive indicating insignificant and false leaks. All suspect leaks found through the use of a CGD should be confirmed using a leak detection solution.

Where gas leakage is confirmed, the owner should be notified that repairs must be made. The inspection should include the following components:

a. All gas piping fittings located within the appliance space.

b. Appliance connector fittings.

c. Appliance gas valve/regulator housing and connections.

(2) *Appliance Connector.* Verify that the appliance connection type is compliant with Section G2422 of the *International Fuel Gas Code.* Inspect flexible appliance connections to determine if they are free of cracks, corrosion and signs of damage. Verify that there are no uncoated brass connectors. Where connectors are determined to be unsafe or where an uncoated brass connector is found, the appliance shutoff valve should be placed in the off position and the owner notified that the connector must be replaced.

(3) *Piping Support.* Inspect piping to determine that it is adequately supported, that there is no undue stress on the piping, and if there are any improperly capped pipe openings.

(4) *Bonding.* Verify that the electrical bonding of gas piping is compliant with Section G2411 of the *International Fuel Gas Code.*

D.4 Inspections to be performed with the Appliance Not Operating. The following safety inspection procedures are performed on appliances that are not operating. These inspections are applicable to all appliance installations.

(1) *Preparing for Inspection.* Shut off all gas and electrical power to the appliances located in the same room being inspected. For gas supply, use the shutoff valve in the supply line or at the manifold serving each appliance. For electrical power, place the circuit breaker in the off position or remove the fuse that serves each appliance. A lock type device or tag should be installed on each gas shutoff valve and at the electrical panel to indicate that the service has been shut off for inspection purposes.

(2) *Vent System Size and Installation.* Verify that the existing venting system size and installation are compliant with Chapter 5 of the *International Fuel Gas Code.* The size and installation of venting systems for other than natural draft and Category I appliances should be in compliance with the manufacturer's installation instructions. Inspect the venting system to determine that it is free of blockage, restriction, leakage, corrosion, and other deficiencies that could cause an unsafe condition. Inspect masonry chimneys to determine if they are lined. Inspect plastic venting system to determine that it is free of sagging and it is sloped in an upward direction to the outdoor vent termination.

(3) *Combustion Air Supply.* Inspect provisions for combustion air as follows:

a. *Non-Direct Vent Appliances.* Determine that non-direct vent appliance installations are compliant with the combustion air requirements in Section G2407 of the *International Fuel Gas Code:*

[1] U.S. Consumer Product Safety Commission, *Responding to Residential Carbon Monoxide Incidents, Guidelines For Fire and Other Emergency Response Personnel,* Approved 7/23/02

Inspect any interior and exterior combustion air openings and any connected combustion air ducts to determine that there is no blockage, restriction, corrosion or damage. Inspect to determine that the upper horizontal combustion air duct is not sloped in a downward direction toward the air supply source.

b. *Direct Vent Appliances.* Verify that the combustion air supply ducts and pipes are securely fastened to direct vent appliance and determine that there are no separations, blockage, restriction, corrosion or other damage. Determine that the combustion air source is located in the outdoors or to areas that freely communicate to the outdoors.

c. *Unvented Appliances.* Verify that the total input of all unvented room heaters and gas-fired refrigerators installed in the same room or rooms that freely communicate with each other does not exceed 20 Btu/hr/ft^3.

(4) *Flooded Appliances.* Inspect the appliance for signs that the appliance may have been damaged by flooding. Signs of flooding include a visible water submerge line on the appliance housing, excessive surface or component rust, deposited debris on internal components, and mildew-like odor. Inform the owner that any part of the appliance control system and any appliance gas control that has been under water must be replaced. All flood-damaged plumbing, heating, cooling and electrical appliances should be replaced.

(5) *Flammable Vapors.* Inspect the room/space where the appliance is installed to determine if the area is free of the storage of gasoline or any flammable products such as oil-based solvents, varnishes or adhesives. Where the appliance is installed where flammable products will be stored or used, such as a garage, verify that the appliance burner(s) is a minimum of 18" above the floor unless the appliance is listed as flammable vapor ignition resistant.

(6) *Clearances to Combustibles.* Inspect the immediate location where the appliance is installed to determine if the area is free of rags, paper or other combustibles. Verify that the appliance and venting system are compliant with clearances to combustible building components in accordance with Sections G2408.5, G2425.15.4, G2426.5, G2427.6.1, G2427.10.5 and other applicable sections of Section G2427.

(7) *Appliance Components.* Inspect internal components by removing access panels or other components for the following:

a. Inspect burners and crossovers for blockage and corrosion. The presence of soot, debris, and signs of excessive heating may indicate incomplete combustion due to blockage or improper burner adjustments.

c. Metallic and non-metallic hoses for signs of cracks, splitting, corrosion, and lose connections.

d. Signs of improper or incomplete repairs

e. Modifications that override controls and safety systems

f. Electrical wiring for loose connections; cracks, missing or worn electrical insulation; and indications of excessive heat or electrical shorting. Appliances requiring an external electrical supply should be inspected for proper electrical connection in accordance with the National Electric Code.

(8) *Placing Appliances Back in Operation.* Return all inspected appliances and systems to their preexisting state by reinstalling any removed access panels and components. Turn on the gas supply and electricity to each appliance found in safe condition. Proceed to the operating inspections in D.5 through D.6.

D.5 Inspections to be performed with the Appliance Operating. The following safety inspection procedures are to be performed on appliances that are operating where there are no unsafe conditions or where corrective repairs have been completed.

D.5.1 General Appliance Operation.

(1) *Initial Startup.* Adjust the thermostat or other control device to start the appliance. Verify that the appliance starts up normally and is operating properly.

Determine that the pilot(s), where provided, is burning properly and that the main burner ignition is satisfactory, by interrupting and re-establishing the electrical supply to the appliance in any convenient manner. If the appliance is equipped with a continuous pilot(s), test all pilot safety devices to determine whether they are operating properly by extinguishing the pilot(s) when the main burner(s) is off and determining, after 3 minutes, that the main burner gas does not flow upon a call for heat. If the appliance is not provided with a pilot(s), test for proper operation of the ignition system in accordance with the appliance manufacturer's lighting and operating instructions.

(2) *Flame Appearance.* Visually inspect the flame appearance for proper color and appearance. Visually determine that the main burner gas is burning properly (i.e., no floating, lifting, or flashback). Adjust the primary air shutter as required. If the appliance is equipped with high and low flame controlling or flame modulation, check for proper main burner operation at low flame.

(3) *Appliance Shutdown.* Adjust the thermostat or other control device to shut down the appliance. Verify that the appliance shuts off properly.

D.5.2 Test for Combustion Air and Vent Drafting for Natural Draft and Category I Appliances. Combustion air and vent draft procedures are for natural draft and category I appliances equipped with a draft hood and connected to a natural draft venting system.

(1) *Preparing for Inspection.* Close all exterior building doors and windows and all interior doors between the space in which the appliance is located and other spaces of the building that can be closed. Turn on any clothes dryer. Turn on any exhaust fans, such as range hoods and bathroom exhausts, so they will operate at maximum speed. Do not operate a summer exhaust fan. Close fireplace dampers and any fireplace doors.

(2) *Placing the Appliance in Operation.* Place the appliance being inspected in operation. Adjust the thermostat or control so the appliance will operate continuously.

(3) *Spillage Test.* Verify that all appliances located within the same room are in their standby mode and ready for operation. Follow lighting instructions for each appliance as necessary. Test for spillage at the draft hood relief opening as follows:

a. After 5 minutes of main burner operation, check for spillage using smoke.

b. Immediately after the first check, turn on all other fuel gas burning appliances within the same room so they will operate at their full inputs and repeat the spillage test.

c. Shut down all appliances to their standby mode and wait for 15 minutes.

d. Repeat the spillage test steps a through c on each appliance being inspected.

(4) Additional Spillage Tests: Determine if the appliance venting is impacted by other door and air handler settings by performing the following tests.

a. Set initial test condition in accordance with D.5.2 (1).

b. Place the appliance(s) being inspected in operation. Adjust the thermostat or control so the appliance(s) will operate continuously.

c. Open the door between the space in which the appliance(s) is located and the rest of the building. After 5 minutes of main burner operation, check for spillage at each appliance using smoke.

d. Turn on any other central heating or cooling air handler fan that is located outside of the area where the appliances are being inspected. After 5 minutes of main burner operation, check for spillage at each appliance using smoke. The test should be conducted with the door between the space in which the appliance(s) is located and the rest of the building in the open and in the closed position.

(5) Return doors, windows, exhaust fans, fireplace dampers, and any other fuel gas burning appliance to their previous conditions of use.

(6) If, after completing the spillage test it is believed sufficient combustion air is not available, the owner should be notified that an alternative combustion air source is needed in accordance with Section G2407 of the *International Fuel Gas Code*. Where it is believed that the venting system does not provide adequate natural draft, the owner should be notified that alternative vent sizing, design or configuration is needed in accordance with Chapter 24 of the *International Fuel Gas Code*. If spillage occurs, the owner should be notified as to its cause, be instructed as to which position of the door (open or closed) would lessen its impact, and that corrective action by a HVAC professional should be taken.

D.6 Appliance-Specific Inspections. The following appliance-specific inspections are to be performed as part of a complete inspection. These inspections are performed either with the appliance in the off or standby mode (indicated by "*OFF*") or on an appliance that is operating (indicated by "*ON*"). The CO measurements are to be undertaken only after the appliance is determined to be properly venting. The CO detector should be capable of calculating CO emissions in ppm air free.

(1) Forced Air Furnaces:

a. OFF. Verify that an air filter is installed and that it is not excessively blocked with dust.

b. OFF. Inspect visible portions of the furnace combustion chamber for cracks, ruptures, holes, and corrosion. A heat exchanger leakage test should be conducted.

c. ON. Verify both the limit control and the fan control are operating properly. Limit control operation can be checked by blocking the circulating air inlet or temporarily disconnecting the electrical supply to the blower motor and determining that the limit control acts to shut off the main burner gas.

d. ON. Verify that the blower compartment door is properly installed and can be properly re-secured if opened. Verify that the blower compartment door safety switch operates properly.

e. *ON.* Check for flame disturbance before and after blower comes on which can indicate heat exchanger leaks.

f. *ON*. Measure the CO in the vent after 5 minutes of main burner operation. The CO should not exceed threshold in Table D.6.

(2) Boilers:

a. OFF and ON. Inspect for evidence of water leaks around boiler and connected piping.

b. ON. Verify that the water pumps are in operating condition. Test low water cutoffs, automatic feed controls, pressure and temperature limit controls, and relief valves in accordance with the manufacturer's recommendations to determine that they are in operating condition.

c. ON. Measure the CO in the vent after 5 minutes of main burner operation. The CO should not exceed threshold in Table D.6.

(3) Water Heaters:

a. *OFF*. Verify that the pressure-temperature relief valve is in operating condition. Water in the heater should be at operating temperature.

b. OFF. Verify that inspection covers, glass, and gaskets are intact and in place on a flammable vapor ignition resistant (FVIR) type water heater.

c. ON. Verify that the thermostat is set in accordance with the manufacturer's operating instructions and measure the water temperature at the closest tub or sink to verify that it is no greater than 120°F.

d. OFF. Where required by the local building code in earthquake prone locations, inspect that the water heater is secured to the wall studs in two locations (high and low) using appropriate metal strapping and bolts.

e. ON. Measure the CO in the vent after 5 minutes of main burner operation. The CO should not exceed threshold in Table D.6.

(4) Cooking Appliances

a. *OFF*. Inspect oven cavity and range-top exhaust vent for blockage with aluminum foil or other materials.

b. *OFF*. Inspect cook top to verify that it is free from a build-up of grease.

c. *ON*. Measure the CO above each burner and at the oven exhaust vents after 5 minutes of burner operation. The CO should not exceed threshold in Table D.6.

(5) Vented Room Heaters

a. OFF. For built-in room heaters and wall furnaces, inspect that the burner compartment is free of lint and debris.

b. OFF. Inspect that furnishings and combustible building components are not blocking the heater.

a. ON. Measure the CO in the vent after 5 minutes of main burner operation. The CO should not exceed threshold in Table D.6.

(6) Vent-Free (unvented) Heaters

a. OFF. Verify that the heater input is a maximum of 40,000 Btu input, but not more than 10,000 Btu where installed in a bedroom, and 6,000 Btu where installed in a bathroom.

b. OFF. Inspect the ceramic logs provided with gas log type vent free heaters that they are properly located and aligned.

c. OFF. Inspect the heater that it is free of excess lint build-up and debris.

c. OFF. Verify that the oxygen depletion safety shutoff system has not been altered or bypassed.

d. ON. Verify that the main burner shuts down within 3 minutes by extinguishing the pilot light. The test is meant to simulate the operation of the oxygen depletion system (ODS).

e. ON. Measure the CO after 5 minutes of main burner operation. The CO should not exceed threshold in Table D.6.

(7) Gas Log Sets and Gas Fireplaces

a. OFF. For gas logs installed in wood burning fireplaces equipped with a damper, verify that the fireplace damper is in a fixed open position.

b. ON. Measure the CO in the firebox (log sets installed in wood burning fireplaces or in the vent (gas fireplace) after 5 minutes of main burner operation. The CO should not exceed threshold in Table D.6.

(8) Gas Clothes Dryer

a. *OFF*. Where installed in a closet, verify that a source of make-up air is provided and inspect that any make-up air openings, louvers, and ducts are free of blockage.

b. OFF. Inspect for excess amounts of lint around the dryer and on dryer components. Inspect that there is a lint trap properly installed and it does not have holes or tears. Verify that it is in a clean condition.

c. OFF. Inspect visible portions of the exhaust duct and connections for loose fittings and connections, blockage, and signs of corrosion. Verify that the duct termination is not blocked and that it terminates in an outdoor location. Verify that only approved metal vent ducting

material is installed (plastic and vinyl materials are not approved for gas dryers).

d. ON. Verify mechanical components including drum and blower are operating properly.

e. ON. Operate the clothes dryer and verify that exhaust system is intact and exhaust is exiting the termination.

f. ON. Measure the CO at the exhaust duct or termination after 5 minutes of main burner operation. The CO should not exceed threshold in Table D.6.

TABLE D.6
CO THRESHOLDS

Central Furnace (all categories)	400 ppm[1] air free[2,3]
Floor Furnace	400 ppm air free
Gravity Furnace	400 ppm air free
Wall Furnace (BIV)	200 ppm air free
Wall Furnace (Direct Vent)	400 ppm air free
Vented Room Heater	200 ppm air free
Vent-Free Room Heater	200 ppm air free
Water Heater	200 ppm air free
Oven/Boiler	225 ppm as measured
Top Burner	25 ppm as measured (per burner)
Clothes Dryer	400 ppm air free
Refrigerator	25 ppm as measured
Gas Log (gas fireplace)	25 ppm as measured in vent
Gas Log (installed in wood burning fireplace)	400 ppm air free in firebox

[1] Parts per million

[2] Air free emission levels are based on a mathematical equation (involving carbon monoxide and oxygen or carbon dioxide readings) to convert an actual diluted flue gas carbon monoxide testing sample to an undiluted air free flue gas carbon monoxide level utilized in the appliance certification standards. For natural gas or propane, using as-measured CO ppm and O2 percentage:

$$CO_{AFppm} = \left(\frac{20.9}{20.9 - O_2}\right) \times CO_{ppm}$$

Where:

CO_{AFppm} = Carbon monoxide, air-free ppm

CO_{ppm} = As-measured combustion gas carbon monoxide ppm

O2 = Percentage of oxygen in combustion gas, as a percentage

[3] An alternate method of calculating the CO air free when access to an oxygen meter is not available:

$$CO_{AFppm} = \left(\frac{UCO_2}{CO_2}\right) \times CO$$

Where:

UCO_2 = Ultimate concentration of carbon dioxide for the fuel being burned in percent for natural gas (12.2 percent) and propane (14.0 percent)

CO_2 = Measured concentration of carbon dioxide in combustion products in percent

CO = Measured concentration of carbon monoxide in combustion products in percent

APPENDIX E

MANUFACTURED HOUSING USED AS DWELLINGS

(The provisions contained in this appendix are not mandatory unless specifically referenced in the adopting ordinance.)

SECTION AE101
SCOPE

AE101.1 General. These provisions shall be applicable only to a *manufactured home* used as a single *dwelling unit* installed on privately owned (nonrental) lots and shall apply to the following:

1. Construction, *alteration* and repair of any foundation system that is necessary to provide for the installation of a *manufactured home* unit.
2. Construction, installation, *addition*, *alteration*, repair or maintenance of the building service *equipment* that is necessary for connecting *manufactured homes* to water, fuel, or power supplies and sewage systems.
3. *Alterations*, *additions* or repairs to existing *manufactured homes*. The construction, *alteration*, moving, demolition, repair and use of accessory buildings and structures, and their building service *equipment*, shall comply with the requirements of the codes adopted by this *jurisdiction*.

These provisions shall not be applicable to the design and construction of *manufactured homes* and shall not be deemed to authorize either modifications or *additions* to *manufactured homes* where otherwise prohibited.

Exception: In addition to these provisions, new and replacement *manufactured homes* to be located in flood hazard areas as established in Table R301.2(1) of the *International Residential Code* shall meet the applicable requirements of Section R322 of the *International Residential Code*.

SECTION AE102
APPLICATION TO EXISTING MANUFACTURED HOMES AND BUILDING SERVICE EQUIPMENT

AE102.1 General. *Manufactured homes* and their building service *equipment* to which *additions*, *alterations* or repairs are made shall comply with all the requirements of these provisions for new facilities, except as specifically provided in this section.

AE102.2 Additions, alterations or repairs. *Additions* made to a *manufactured home* shall conform to one of the following:

1. Be certified under the National Manufactured Housing Construction and Safety Standards Act of 1974 (42 U.S.C. Section 5401, et seq.).
2. Be designed and constructed to comply with the applicable provisions of the National Manufactured Housing Construction and Safety Standards Act of 1974 (42 U.S.C. Section 5401, et seq.).
3. Be designed and constructed in compliance with the code adopted by this *jurisdiction*.

Additions shall be structurally separated from the *manufactured home*.

Exception: A structural separation need not be provided when structural calculations are provided to justify the omission of such separation.

Alterations or repairs may be made to any *manufactured home* or to its building service *equipment* without requiring the existing *manufactured home* or its building service *equipment* to comply with all the requirements of these provisions, provided the *alteration* or repair conforms to that required for new construction, and provided further that no hazard to life, health or safety will be created by such *additions*, *alterations* or repairs.

Alterations or repairs to an existing *manufactured home*, which are nonstructural and do not adversely affect any structural member or any part of the building or structure having required fire protection, may be made with materials equivalent to those of which the *manufactured home* structure is constructed, subject to approval by the *building official*.

Exception: The installation or replacement of glass shall be required for new installations.

Minor *additions*, *alterations* and repairs to existing building service *equipment* installations may be made in accordance with the codes in effect at the time the original installation was made, subject to the approval of the *building official*, and provided such *additions*, *alterations* and repairs will not cause the existing building service *equipment* to become unsafe, insanitary or overloaded.

AE102.3 Existing installations. Building service *equipment* lawfully in existence at the time of the adoption of the applicable codes may have their use, maintenance or repair continued if the use, maintenance or repair is in accordance with the original design and no hazard to life, health or property has been created by such building service *equipment*.

AE102.4 Existing occupancy. *Manufactured homes* that are in existence at the time of the adoption of these provisions may have their existing use or occupancy continued if such use or occupancy was legal at the time of the adoption of these provisions, provided such continued use is not dangerous to life, health and safety.

The use or occupancy of any existing *manufactured home* shall not be changed unless evidence satisfactory to the *building official* is provided to show compliance with all applica-

ble provisions of the codes adopted by this *jurisdiction*. Upon any change in use or occupancy, the *manufactured home* shall cease to be classified as such within the intent of these provisions.

AE102.5 Maintenance. All *manufactured homes* and their building service *equipment*, existing and new, and all parts thereof, shall be maintained in a safe and sanitary condition. All devices or safeguards which are required by applicable codes or by the *Manufactured Home* Standards shall be maintained in conformance to the code or standard under which it was installed. The owner or the owner's designated agent shall be responsible for the maintenance of *manufactured homes*, accessory buildings, structures and their building service *equipment*. To determine compliance with this section, the *building official* may cause any *manufactured home*, accessory building or structure to be reinspected.

AE102.6 Relocation. *Manufactured homes* which are to be relocated within this *jurisdiction* shall comply with these provisions.

SECTION AE201
DEFINITIONS

AE201.1 General. For the purpose of these provisions, certain abbreviations, terms, phrases, words and their derivatives shall be construed as defined or specified herein.

ACCESSORY BUILDING. Any building or structure or portion thereto, located on the same property as a *manufactured home*, which does not qualify as a *manufactured home* as defined herein.

BUILDING SERVICE EQUIPMENT. Refers to the plumbing, mechanical and electrical *equipment*, including piping, wiring, fixtures and other accessories which provide sanitation, lighting, heating, ventilation, cooling, fire protection and facilities essential for the habitable occupancy of a *manufactured home* or accessory building or structure for its designated use and occupancy.

MANUFACTURED HOME. A structure transportable in one or more sections which, in the traveling mode, is 8 body feet (2438 body mm) or more in width or 40 body feet (12 192 body mm) or more in length or, when erected on site, is 320 or more square feet (30 m^2), and which is built on a permanent chassis and designed to be used as a *dwelling* with or without a permanent foundation when connected to the required utilities, and includes the plumbing, heating, air-conditioning and electrical systems contained therein; except that such term shall include any structure which meets all the requirements of this paragraph, except the size requirements and with respect to which the manufacturer voluntarily files a certification required by the Secretary of the U.S. Department of Housing and Urban Development (HUD) and complies with the standards established under this title.

For mobile homes built prior to June 15, 1976, a *label* certifying compliance with the *Standard for Mobile Homes*, NFPA 501, ANSI 119.1, in effect at the time of manufacture, is required. For the purpose of these provisions, a mobile home shall be considered a *manufactured home*.

MANUFACTURED HOME INSTALLATION. Construction which is required for the installation of a *manufactured home*, including the construction of the foundation system, required structural connections thereto and the installation of on-site water, gas, electrical and sewer systems and connections thereto which are necessary for the normal operation of the *manufactured home*.

MANUFACTURED HOME STANDARDS. The *Manufactured Home Construction and Safety Standards* as promulgated by the HUD.

PRIVATELY OWNED (NONRENTAL) LOT. A parcel of real estate outside of a *manufactured home* rental community (park) where the land and the *manufactured home* to be installed thereon are held in common ownership.

SECTION AE301
PERMITS

AE301.1 Initial installation. A *manufactured home* shall not be installed on a foundation system, reinstalled or altered without first obtaining a *permit* from the *building official*. A separate *permit* shall be required for each *manufactured home* installation. When *approved* by the *building official*, such *permit* may include accessory buildings and structures, and their building service *equipment*, when the accessory buildings or structures will be constructed in conjunction with the *manufactured home* installation.

AE301.2 Additions, alterations and repairs to a manufactured home. A *permit* shall be obtained to alter, remodel, repair or add accessory buildings or structures to a *manufactured home* subsequent to its initial installation. *Permit* issuance and fees therefor shall be in conformance to the codes applicable to the type of work involved.

An *addition* made to a *manufactured home*, as defined in these provisions, shall comply with these provisions.

AE301.3 Accessory buildings. Except as provided in Section AE301.1, *permits* shall be required for all accessory buildings and structures, and their building service *equipment*. *Permit* issuance and fees therefor shall be in conformance to the codes applicable to the types of work involved.

AE301.4 Exempted work. A *permit* shall not be required for the types of work specifically exempted by the applicable codes. Exemption from the *permit* requirements of any of said codes shall not be deemed to grant authorization for any work to be done in violation of the provisions of said codes or any other laws or ordinances of this *jurisdiction*.

SECTION AE302
APPLICATION FOR PERMIT

AE302.1 Application. To obtain a *manufactured home* installation *permit*, the applicant shall first file an application, in writing, on a form furnished by the *building official* for

that purpose. At the option of the *building official*, every such application shall:

1. Identify and describe the work to be covered by the *permit* for which application is made.
2. Describe the land on which the proposed work is to be done by legal description, street address or similar description that will readily identify and definitely locate the proposed building or work.
3. Indicate the use or occupancy for which the proposed work is intended.
4. Be accompanied by plans, diagrams, computations and specifications, and other data as required in Section AE302.2.
5. Be accompanied by a soil investigation when required by Section AE502.2.
6. State the valuation of any new building or structure; or any *addition*, remodeling or *alteration* to an existing building.
7. Be signed by the permittee, or permittee's authorized agent, who may be required to submit evidence to indicate such authority.
8. Give such other data and information as may be required by the *building official*.

AE302.2 Plans and specifications. Plans, engineering calculations, diagrams and other data as required by the *building official* shall be submitted in not less than two sets with each application for a *permit*. The *building official* may require plans, computations and specifications to be prepared and designed by an engineer or architect licensed by the state to practice as such.

Where no unusual site conditions exist, the *building official* may accept *approved* standard foundation plans and details in conjunction with the manufacturer's *approved* installation instructions without requiring the submittal of engineering calculations.

AE302.3 Information on plans and specifications. Plans and specifications shall be drawn to scale on substantial paper or cloth, and shall be of sufficient clarity to indicate the location, nature and extent of the work proposed and shown in detail that it will conform to these provisions and all relevant laws, ordinances, rules and regulations. The *building official* shall determine what information is required on plans and specifications to ensure compliance.

SECTION AE303
PERMITS ISSUANCE

AE303.1 Issuance. The application, plans and specifications, and other data filed by an applicant for *permit* shall be reviewed by the *building official*. Such plans may be reviewed by other departments of this *jurisdiction* to verify compliance with any applicable laws under their *jurisdiction*. If the *building official* finds that the work described in an application for a *permit*, and the plans, specifications and other data filed therewith, conform to the requirements of these provisions, and other data filed therewith conform to the requirements of these provisions and other pertinent codes, laws and ordinances, and that the fees specified in Section AE304 have been paid, the *building official* shall issue a *permit* therefor to the applicant.

When the *building official* issues the *permit* where plans are required, the *building official* shall endorse in writing or stamp the plans and specifications *APPROVED*. Such *approved* plans and specifications shall not be changed, modified or altered without authorization from the *building official*, and all work shall be done in accordance with the *approved* plans.

AE303.2 Retention of plans. One set of *approved* plans and specifications shall be returned to the applicant and shall be kept on the site of the building or work at all times during which the work authorized thereby is in progress. One set of *approved* plans, specifications and computations shall be retained by the *building official* until final approval of the work.

AE303.3 Validity of permit. The issuance of a *permit* or approval of plans and specifications shall not be construed to be a *permit* for, or an approval of, any violation of any of these provisions or other pertinent codes of any other ordinance of the *jurisdiction*. No *permit* presuming to give authority to violate or cancel these provisions shall be valid.

The issuance of a *permit* based on plans, specifications and other data shall not prevent the *building official* from thereafter requiring the correction of errors in said plans, specifications and other data, or from preventing building operations being carried on thereunder when in violation of these provisions or of any other ordinances of this *jurisdiction*.

AE303.4 Expiration. Every *permit* issued by the *building official* under these provisions shall expire by limitation and become null and void if the work authorized by such *permit* is not commenced within 180 days from the date of such *permit*, or if the work authorized by such *permit* is suspended or abandoned at any time after the work is commenced for a period of 180 days. Before such work can be recommenced, a new *permit* shall be first obtained, and the fee therefor shall be one-half the amount required for a new *permit* for such work, provided no changes have been made or will be made in the original plans and specifications for such work, and provided further that such suspension or abandonment has not exceeded 1 year. In order to renew action on a *permit* after expiration, the permittee shall pay a new full *permit* fee.

Any permittee holding an unexpired *permit* may apply for an extension of the time within which work may commence under that *permit* when the permittee is unable to commence work within the time required by this section for good and satisfactory reasons. The *building official* may extend the time for action by the permittee for a period not exceeding 180 days upon written request by the permittee showing that circumstances beyond the control of the permittee have prevented action from being taken. No *permit* shall be extended more than once.

AE303.5 Suspension or revocation. The *building official* may, in writing, suspend or revoke a *permit* issued under these provisions whenever the *permit* is issued in error or on

the basis of incorrect information supplied, or in violation of any ordinance or regulation or any of these provisions.

SECTION AE304
FEES

AE304.1 Permit fees. The fee for each *manufactured home* installation *permit* shall be established by the *building official.*

When *permit* fees are to be based on the value or valuation of the work to be performed, the determination of value or valuation under these provisions shall be made by the *building official.* The value to be used shall be the total value of all work required for the *manufactured home* installation plus the total value of all work required for the construction of accessory buildings and structures for which the *permit* is issued, as well as all finish work, painting, roofing, electrical, plumbing, heating, air conditioning, elevators, fire-extinguishing systems and any other permanent *equipment* which is a part of the accessory building or structure. The value of the *manufactured home* itself shall not be included.

AE304.2 Plan review fees. When a plan or other data are required to be submitted by Section AE302.2, a plan review fee shall be paid at the time of submitting plans and specifications for review. Said plan review fee shall be as established by the *building official.* Where plans are incomplete or changed so as to require additional plan review, an additional plan review fee shall be charged at a rate as established by the *building official.*

AE304.3 Other provisions.

AE304.3.1 Expiration of plan review. Applications for which no *permit* is issued within 180 days following the date of application shall expire by limitation, and plans and other data submitted for review may thereafter be returned to the applicant or destroyed by the *building official.* The *building official* may extend the time for action by the applicant for a period not exceeding 180 days upon request by the applicant showing that circumstances beyond the control of the applicant have prevented action from being taken. No application shall be extended more than once. In order to renew action on an application after expiration, the applicant shall resubmit plans and pay a new plan review fee.

AE304.3.2 Investigation fees—work without a permit.

AE304.3.2.1 Investigation. Whenever any work for which a *permit* is required by these provisions has been commenced without first obtaining said *permit*, a special investigation shall be made before a *permit* may be issued for such work.

AE304.3.2.2 Fee. An investigation fee, in addition to the *permit* fee, shall be collected whether or not a *permit* is then or subsequently issued. The investigation fee shall be equal to the amount of the *permit* fee required. The minimum investigation fee shall be the same as the minimum fee established by the *building official.* The payment of such investigation fee shall not exempt any person from compliance with all other provisions of either these provisions or other pertinent codes or from any penalty prescribed by law.

AE304.3.3 Fee refunds.

AE304.3.3.1 Permit fee erroneously paid or collected. The *building official* may authorize the refunding of any fee paid hereunder which was erroneously paid or collected.

AE304.3.3.2 Permit fee paid when no work done. The *building official* may authorize the refunding of not more than 80 percent of the *permit* fee paid when no work has been done under a *permit* issued in accordance with these provisions.

AE304.3.3.3 Plan review fee. The *building official* may authorize the refunding of not more than 80 percent of the plan review fee paid when an application for a *permit* for which a plan review fee has been paid is withdrawn or canceled before any plan reviewing is done.

The *building official* shall not authorize the refunding of any fee paid, except upon written application by the original permittee not later than 180 days after the date of the fee payment.

SECTION AE305
INSPECTIONS

AE305.1 General. All construction or work for which a *manufactured home* installation *permit* is required shall be subject to inspection by the *building official*, and certain types of construction shall have continuous inspection by special inspectors as specified in Section AE306. A survey of the *lot* may be required by the *building official* to verify that the structure is located in accordance with the *approved* plans.

It shall be the duty of the *permit* applicant to cause the work to be accessible and exposed for inspection purposes. Neither the *building official* nor this *jurisdiction* shall be liable for expense entailed in the removal or replacement of any material required to allow inspection.

AE305.2 Inspection requests. It shall be the duty of the person doing the work authorized by a *manufactured home* installation *permit* to notify the *building official* that such work is ready for inspection. The *building official* may require that every request for inspection be filed at least one working day before such inspection is desired. Such request may be in writing or by telephone at the option of the *building official.*

It shall be the duty of the person requesting any inspections required, either by these provisions or other applicable codes, to provide access to and means for proper inspection of such work.

AE305.3 Inspection record card. Work requiring a *manufactured home* installation *permit* shall not be commenced until the *permit* holder or the *permit* holder's agent shall have posted an inspection record card in a conspicuous place on the premises and in such position as to allow the *building official* conveniently to make the required entries thereon regarding inspection of the work. This card shall be maintained in

such position by the *permit* holder until final approval has been issued by the *building official.*

AE305.4 Approval required. Work shall not be done on any part of the *manufactured home* installation beyond the point indicated in each successive inspection without first obtaining the approval of the *building official.* Such approval shall be given only after an inspection has been made of each successive step in the construction as indicated by each of the inspections required in Section AE305.5. There shall be a final inspection and approval of the *manufactured home* installation, including connections to its building service *equipment*, when completed and ready for occupancy or use.

AE305.5 Required inspections.

AE305.5.1 Structural inspections for the manufactured home installation. Reinforcing steel or structural framework of any part of any *manufactured home* foundation system shall not be covered or concealed without first obtaining the approval of the *building official.* The *building official*, upon notification from the *permit* holder or the *permit* holder's agent, shall make the following inspections and shall either approve that portion of the construction as completed or shall notify the *permit* holder or the *permit* holder's agent wherein the same fails to comply with these provisions or other applicable codes:

1. Foundation inspection: To be made after excavations for footings are completed and any required reinforcing steel is in place. For concrete foundations, any required forms shall be in place prior to inspection. All materials for the foundation shall be on the job, except where concrete from a central mixing plant (commonly termed "transit mixed") is to be used, the concrete materials need not be on the job. Where the foundation is to be constructed of *approved* treated wood, additional framing inspections as required by the *building official* may be required.
2. Concrete slab or under-floor inspection: To be made after all in-slab or under-floor building service *equipment*, conduit, piping accessories and other ancillary *equipment* items are in place but before any concrete is poured or the *manufactured home* is installed.
3. Anchorage inspection: To be made after the *manufactured home* has been installed and permanently anchored.

AE305.5.2 Structural inspections for accessory building and structures. Inspections for accessory buildings and structures shall be made as set forth in this code.

AE305.5.3 Building service equipment inspections. All building service *equipment* which is required as a part of a *manufactured home* installation, including accessory buildings and structures authorized by the same *permit*, shall be inspected by the *building official.* Building service *equipment* shall be inspected and tested as required by the applicable codes. Such inspections and testing shall be limited to site construction and shall not include building service *equipment* which is a part of the *manufactured home* itself. No portion of any building service *equipment* intended to be concealed by any permanent portion of the construction shall be concealed until inspected and *approved.* Building service *equipment* shall not be connected to a water, fuel or power supply, or sewer system, until authorized by the *building official.*

AE305.5.4 Final inspection. When finish grading and the *manufactured home* installation, including the installation of all required building service *equipment*, is completed and the *manufactured home* is ready for occupancy, a final inspection shall be made.

AE305.6 Other inspections. In addition to the called inspections specified in Section AE305.5.4, the *building official* may make or require other inspections of any construction work to ascertain compliance with these provisions or other codes and laws which are enforced by the code enforcement agency.

SECTION AE306
SPECIAL INSPECTIONS

AE306.1 General. In addition to the inspections required by Section AE305, the *building official* may require the owner to employ a special inspector during construction of specific types of work as described in this code.

SECTION AE307
UTILITY SERVICE

AE307.1 General. Utility service shall not be provided to any building service *equipment* which is regulated by these provisions or other applicable codes, and for which a *manufactured home* installation *permit* is required by these provisions, until *approved* by the *building official.*

SECTION AE401
OCCUPANCY CLASSIFICATION

AE401.1 Manufactured homes. A *manufactured home* shall be limited in use to a single *dwelling unit.*

AE401.2 Accessory buildings. Accessory buildings shall be classified as to occupancy by the *building official* as set forth in this code.

SECTION AE402
LOCATION ON PROPERTY

AE402.1 General. *Manufactured homes* and accessory buildings shall be located on the property in accordance with applicable codes and ordinances of this *jurisdiction.*

SECTION AE501
DESIGN

AE501.1 General. A *manufactured home* shall be installed on a foundation system which is designed and constructed to

sustain within the stress limitations specified in this code and all loads specified in this code.

Exception: When specifically authorized by the *building official*, foundation and anchorage systems which are constructed in accordance with the methods specified in Section AE600 of these provisions, or in the HUD, *Permanent Foundations for Manufactured Housing,* 1984 Edition, Draft, shall be deemed to meet the requirements of this appendix.

AE501.2 Manufacturer's installation instructions. The installation instructions as provided by the manufacturer of the *manufactured home* shall be used to determine permissible points of support for vertical loads and points of attachment for anchorage systems used to resist horizontal and uplift forces.

AE501.3 Rationality. Any system or method of construction to be used shall submit to a rational analysis in accordance with well-established principles of mechanics.

SECTION AE502
FOUNDATION SYSTEMS

AE502.1 General. Foundation systems designed and constructed in accordance with this section may be considered a permanent installation.

AE502.2 Soil classification. The classification of the soil at each *manufactured home* site shall be determined when required by the *building official.* The *building official* may require that the determination be made by an engineer or architect licensed by the state to conduct soil investigations.

The classification shall be based on observation and any necessary tests of the materials disclosed by borings or excavations made in appropriate locations. Additional studies may be necessary to evaluate soil strength, the effect of moisture variation on soil-bearing capacity, compressibility and expansiveness.

When required by the *building official,* the soil classification design-bearing capacity and lateral pressure shall be shown on the plans.

AE502.3 Footings and foundations. Footings and foundations, unless otherwise specifically provided, shall be constructed of materials specified by this code for the intended use and in all cases shall extend below the frost line. Footings of concrete and masonry shall be of solid material. Foundations supporting untreated wood shall extend at least 8 inches (203 mm) above the adjacent finish *grade.* Footings shall have a minimum depth below finished *grade* of 12 inches (305 mm) unless a greater depth is recommended by a foundation investigation.

Piers and bearing walls shall be supported on masonry or concrete foundations or piles, or other *approved* foundation systems which shall be of sufficient capacity to support all loads.

AE502.4 Foundation design. When a design is provided, the foundation system shall be designed in accordance with the applicable structural provisions of this code and shall be designed to minimize differential settlement. Where a design is not provided, the minimum foundation requirements shall be as set forth in this code.

AE502.5 Drainage. Provisions shall be made for the control and drainage of surface water away from the *manufactured home.*

AE502.6 Under-floor clearances—ventilation and access. A minimum clearance of 12 inches (305 mm) shall be maintained beneath the lowest member of the floor support framing system. Clearances from the bottom of wood floor joists or perimeter joists shall be as specified in this code.

Under-floor spaces shall be ventilated with openings as specified in this code. If combustion air for one or more heat-producing *appliance* is taken from within the under-floor spaces, ventilation shall be adequate for proper *appliance* operation.

Under-floor access openings shall be provided. Such openings shall be not less than 18 inches (457 mm) in any dimension and not less than 3 square feet (0.279 m^2) in area, and shall be located so that any water supply and sewer drain connections located under the *manufactured home* are accessible.

SECTION AE503
SKIRTING AND PERIMETER ENCLOSURES

AE503.1 Skirting and permanent perimeter enclosures. Skirting and permanent perimeter enclosures shall be installed only where specifically required by other laws or ordinances. Skirting, when installed, shall be of material suitable for exterior exposure and contact with the ground. Permanent perimeter enclosures shall be constructed of materials as required by this code for regular foundation construction.

Skirting shall be installed in accordance with the skirting manufacturer's installation instructions. Skirting shall be adequately secured to ensure stability, minimize vibration and susceptibility to wind damage, and compensate for possible frost heave.

AE503.2 Retaining walls. Where retaining walls are used as a permanent perimeter enclosure, they shall resist the lateral displacements of soil or other materials and shall conform to this code as specified for foundation walls. Retaining walls and foundation walls shall be constructed of *approved* treated wood, concrete, masonry or other *approved* materials or combination of materials as for foundations as specified in this code. Siding materials shall extend below the top of the exterior of the retaining or foundation wall, or the joint between the siding and enclosure wall shall be flashed in accordance with this code.

SECTION AE504
STRUCTURAL ADDITIONS

AE504.1 General. Accessory buildings shall not be structurally supported by or attached to a *manufactured home* unless

engineering calculations are submitted to substantiate any proposed structural connection.

Exception: The *building official* may waive the submission of engineering calculations if it is found that the nature of the work applied for is such that engineering calculations are not necessary to show conformance to these provisions.

SECTION AE505
BUILDING SERVICE EQUIPMENT

AE505.1 General. The installation, *alteration*, repair, replacement, *addition* to or maintenance of the building service *equipment* within the *manufactured home* shall conform to regulations set forth in the *Manufactured Home* Standards. Such work which is located outside the *manufactured home* shall comply with the applicable codes adopted by this *jurisdiction*.

SECTION AE506
EXITS

AE506.1 Site development. Exterior stairways and ramps which provide egress to the public way shall comply with the applicable provisions of this code.

AE506.2 Accessory buildings. Every accessory building or portion thereof shall be provided with exits as required by this code.

SECTION AE507
OCCUPANCY, FIRE SAFETY AND ENERGY CONSERVATION STANDARDS

AE507.1 General. *Alterations* made to a *manufactured home* subsequent to its initial installation shall conform to the occupancy, fire safety and energy conservation requirements set forth in the *Manufactured Home* Standards.

SECTION AE600
SPECIAL REQUIREMENTS FOR FOUNDATION SYSTEMS

AE600.1 General. This section is applicable only where specifically authorized by the *building official*.

SECTION AE601
FOOTINGS AND FOUNDATIONS

AE601.1 General. The capacity of individual load-bearing piers and their footings shall be sufficient to sustain all loads specified in this code within the stress limitations specified in this code. Footings, unless otherwise *approved* by the *building official*, shall be placed level on firm, undisturbed soil or an engineered fill which is free of organic material, such as weeds and grasses. Where used, an engineered fill shall provide a minimum load-bearing capacity of not less than 1,000 pounds per square foot (48 kN/m^2). Continuous footings shall conform to the requirements of this code. Section AE502 of these provisions shall apply to footings and foundations constructed under the provisions of this section.

SECTION AE602
PIER CONSTRUCTION

AE602.1 General. Piers shall be designed and constructed to distribute loads evenly. Multiple-section homes may have concentrated roof loads which will require special consideration. Load-bearing piers may be constructed utilizing one of the following methods listed. Such piers shall be considered to resist only vertical forces acting in a downward direction. They shall not be considered as providing any resistance to horizontal loads induced by wind or earthquake forces.

1. A prefabricated load-bearing device that is listed and *labeled* for the intended use.
2. Mortar shall comply with ASTM C 270, Type M, S or N; this may consist of one part Portland cement, one-half part hydrated lime and four parts sand by volume. Lime shall not be used with plastic or waterproof cement.
3. A cast-in-place concrete pier with concrete having specified compressive strength at 28 days of 2,500 pounds per square inch (17 225 kPa).

Alternative materials and methods of construction may be used for piers which have been designed by an engineer or architect licensed by the state to practice as such.

Caps and leveling spacers may be used for leveling of the *manufactured home*. Spacing of piers shall be as specified in the manufacturer's installation instructions, if available, or by an *approved* designer.

SECTION AE603
HEIGHT OF PIERS

AE603.1 General. Piers constructed as indicated in Section AE602 may have heights as follows:

1. Except for corner piers, piers 36 inches (914 mm) or less in height may be constructed of masonry units, placed with cores or cells vertically. Piers shall be installed with their long dimension at right angles to the main frame member they support and shall have a minimum cross-sectional area of 128 square inches (82 560 mm^2). Piers shall be capped with minimum 4-inch (102 mm) *solid masonry* units or equivalent.
2. Piers between 36 and 80 inches (914 and 2032 mm) in height and all corner piers greater than 24 inches (610 mm) in height shall be at least 16 inches by 16 inches (406 mm by 406 mm) consisting of interlocking masonry units and shall be fully capped with minimum 4-inch (102 mm) *solid masonry* units or equivalent.
3. Piers greater than 80 inches (2032 mm) in height may be constructed in accordance with the provisions of Item 2, provided the piers shall be filled solid with grout and reinforced with four continuous No. 5 bars. One bar shall be placed in each corner cell of hollow

masonry unit piers or in each corner of the grouted space of piers constructed of *solid masonry* units.

4. Cast-in-place concrete piers meeting the same size and height limitations of Items 1, 2 and 3 may be substituted for piers constructed of masonry units.

SECTION AE604
ANCHORAGE INSTALLATIONS

AE604.1 Ground anchors. Ground anchors shall be designed and installed to transfer the anchoring loads to the ground. The load-carrying portion of the ground anchors shall be installed to the full depth called for by the manufacturer's installation instructions and shall extend below the established frost line into undisturbed soil.

Manufactured ground anchors shall be listed and installed in accordance with the terms of their listing and the anchor manufacturer's instructions, and shall include the means of attachment of ties meeting the requirements of Section AE605. Ground anchor manufacturer's installation instructions shall include the amount of preload required and load capacity in various types of soil. These instructions shall include tensioning adjustments which may be needed to prevent damage to the *manufactured home*, particularly damage that can be caused by frost heave. Each ground anchor shall be marked with the manufacturer's identification and listed model identification number which shall be visible after installation. Instructions shall accompany each listed ground anchor specifying the types of soil for which the anchor is suitable under the requirements of this section.

Each *approved* ground anchor, when installed, shall be capable of resisting an allowable working load at least equal to 3,150 pounds (14 kN) in the direction of the tie plus a 50-percent overload [4,725 pounds (21 kN) total] without failure. Failure shall be considered to have occurred when the anchor moves more than 2 inches (51 mm) at a load of 4,725 pounds (21 kN) in the direction of the tie installation. Those ground anchors which are designed to be installed so that loads on the anchor are other than direct withdrawal shall be designed and installed to resist an applied design load of 3,150 pounds (14 kN) at 40 to 50 degrees from vertical or within the angle limitations specified by the home manufacturer without displacing the tie end of the anchor more than 4 inches (102 mm) horizontally. Anchors designed for the connection of multiple ties shall be capable of resisting the combined working load and overload consistent with the intent expressed herein.

When it is proposed to use ground anchors and the *building official* has reason to believe that the soil characteristics at a given site are such as to render the use of ground anchors advisable, or when there is doubt regarding the ability of the ground anchors to obtain their listed capacity, the *building official* may require that a representative field installation be made at the site in question and tested to demonstrate ground-anchor capacity. The *building official* shall approve the test procedures.

AE604.2 Anchoring equipment. Anchoring *equipment*, when installed as a permanent installation, shall be capable of resisting all loads as specified within these provisions. When the stabilizing system is designed by an engineer or architect licensed by the state to practice as such, alternative designs may be used, providing the anchoring *equipment* to be used is capable of withstanding a load equal to 1.5 times the calculated load. All anchoring *equipment* shall be listed and *labeled* as being capable of meeting the requirements of these provisions. Anchors as specified in this code may be attached to the main frame of the *manufactured home* by an *approved* $^{3}/_{16}$-inch-thick (4.76 mm) slotted steel plate anchoring device. Other anchoring devices or methods meeting the requirements of these provisions may be permitted when *approved* by the *building official*.

Anchoring systems shall be so installed as to be permanent. Anchoring *equipment* shall be so designed to prevent self-disconnection with no hook ends used.

AE604.3 Resistance to weather deterioration. All anchoring *equipment*, tension devices and ties shall have a resistance to deterioration as required by this code.

AE604.4 Tensioning devices. Tensioning devices, such as turnbuckles or yoke-type fasteners, shall be ended with clevis or welded eyes.

SECTION AE605
TIES, MATERIALS AND INSTALLATION

AE605.1 General. Steel strapping, cable, chain or other *approved* materials shall be used for ties. All ties shall be fastened to ground anchors and drawn tight with turnbuckles or other adjustable tensioning devices or devices supplied with the ground anchor. Tie materials shall be capable of resisting an allowable working load of 3,150 pounds (14 kN) with no more than 2-percent elongation and shall withstand a 50-percent overload [4,750 pounds (21 kN)]. Ties shall comply with the weathering requirements of Section AE604.3. Ties shall connect the ground anchor and the main structural frame. Ties shall not connect to steel outrigger beams which fasten to and intersect the main structural frame unless specifically stated in the manufacturer's installation instructions. Connection of cable ties to main frame members shall be $^{5}/_{8}$-inch (15.9 mm) closed-eye bolts affixed to the frame member in an *approved* manner. Cable ends shall be secured with at least two U-bolt cable clamps with the "U" portion of the clamp installed on the short (dead) end of the cable to ensure strength equal to that required by this section.

Wood floor support systems shall be fixed to perimeter foundation walls in accordance with provisions of this code. The minimum number of ties required per side shall be sufficient to resist the wind load stated in this code. Ties shall be as evenly spaced as practicable along the length of the *manufactured home* with the distance from each end of the home and the tie nearest that end not exceeding 8 feet (2438 mm). When continuous straps are provided as vertical ties, such ties shall be positioned at rafters and studs. Where a vertical tie and diagonal tie are located at the same place, both ties may be connected to a single anchor, provided the anchor used is capable of carrying both loads. Multiple-section *manufactured homes* require diagonal ties only. Diagonal ties shall be installed on the exterior main frame and slope to the exterior

at an angle of 40 to 50 degrees from the vertical or within the angle limitations specified by the home manufacturer. Vertical ties which are not continuous over the top of the *manufactured home* shall be attached to the main frame.

SECTION AE606
REFERENCED STANDARDS

ASTM C 270—04 Specification for Mortar for Unit Masonry.....AE602

NFPA 501—03 Standard on Manufactured Housing.....AE201

APPENDIX F

PASSIVE RADON GAS CONTROLS

(The provisions contained in this appendix are not mandatory unless specifically referenced in the adopting ordinance.)

SECTION AF101
SCOPE

AF101.1 General. This appendix contains requirements for new construction in *jurisdictions* where radon-resistant construction is required. These requirements are intended to provide a passive means of resisting radon gas entry and prepare the *dwelling* for post-construction radon mitigation, if necessary (see Figure AF102). Active construction techniques, rather than passive techniques, shall be permitted to be used where approved.

Inclusion of this appendix by *jurisdictions* shall be determined through the use of locally available data or determination of Zone 1 designation in Figure AF101 and Table AF101(1).

SECTION AF102
DEFINITIONS

AF102.1 General. For the purpose of these requirements, the terms used shall be defined as follows:

DRAIN TILE LOOP. A continuous length of drain tile or perforated pipe extending around all or part of the internal or external perimeter of a *basement* or crawl space footing.

ENCLOSED CRAWL SPACE. A crawl space that is enclosed with foundation walls inclusive of any windows, doors, access openings and required vents.

GAS-PERMEABLE LAYER. A gas-permeable layer shall consist of one of the following:

1. A uniform layer of clean aggregate that is not less than 4 inches (102 mm) thick. The aggregate shall consist of material that will pass through a 2-inch (51 mm) sieve and be retained by a $^1/_4$-inch (6.4 mm) sieve.
2. A uniform layer of sand (native or fill) that is not less than 4 inches (102 mm) thick and that is overlain by a soil gas collection mat or soil gas matting installed in accordance with the manufacturer's instructions.

RADON GAS. A naturally occurring, chemically inert, radioactive gas.

SOIL-GAS-RETARDER. A continuous membrane of 6-mil (0.15 mm) polyethylene used to retard the flow of soil gases into a *dwelling*.

SUBMEMBRANE DEPRESSURIZATION SYSTEM. A system designed to achieve lower submembrane air pressure relative to basement or crawl space air pressure by use of a vent drawing air from beneath the soil-gas-retarder membrane.

SUBSLAB DEPRESSURIZATION SYSTEM (Passive). A system designed to achieve lower subslab air pressure relative to indoor air pressure by use of a vent pipe drawing air from beneath concrete floor slabs or other floor assemblies that are in contact with the ground.

VENT PIPE. Not less than a 3-inch-diameter (76 mm) ABS or PVC gas-tight pipe extending from the gas permeable layer through the roof.

SECTION AF103
PASSIVE RADON-RESISTANT SYSTEM REQUIREMENTS

AF103.1 General. The following components of a passive submembrane or subslab depressurization system shall be installed during construction.

AF103.2 Entry routes. Potential radon entry routes shall be closed in accordance with Sections AF103.2.1 through AF103.2.8.

AF103.2.1 Floor openings. Openings around bathtubs, showers, water closets, pipes, wires or other objects that penetrate concrete slabs, or other floor assemblies, shall be filled with a polyurethane caulk or expanding foam applied in accordance with the manufacturer's instructions.

AF103.2.2 Sumps. Sumps open to soil or serving as the termination point for subslab or exterior drain tile loops shall be covered with a gasketed or sealed lid. Sumps used as the suction point in a subslab depressurization system shall have a lid designed to accommodate the vent pipe. Sumps used as a floor drain shall have a lid equipped with a trapped inlet.

AF103.2.3 Foundation walls. Hollow block masonry foundation walls shall be constructed with a continuous course of *solid masonry*, one course of masonry grouted solid, or a solid concrete beam at or above *grade*. Where a brick veneer or other masonry ledge is installed, the course immediately below that ledge shall be *solid masonry*, one course of masonry grouted solid, or a solid concrete beam. Joints, cracks or other openings around penetrations of both exterior and interior surfaces of foundation walls below *grade* shall be filled with polyurethane caulk.

AF103.2.4 Dampproofing. The exterior surfaces of foundation walls below *grade* shall be dampproofed in accordance with Section R406.

AF103.2.5 Air-conditioning systems. Entry points, joints or other openings into air-conditioning systems in enclosed crawl spaces shall be sealed.

Exception: Systems with gasketed seams or that are otherwise sealed by the manufacturer.

AF103.2.6 Ducts. Ductwork passing through or beneath a slab within a *dwelling* shall be of seamless material unless the air-conditioning system is designed to maintain continuous positive pressure within such ducting. Joints in such ductwork shall be sealed.

Ductwork located in enclosed crawl spaces shall have seams and joints sealed by closure systems in accordance with Section M1601.4.1.

AF103.2.7 Crawl space access. Access doors and other openings or penetrations between *basements* and adjoining crawl spaces shall be closed, gasketed or sealed.

AF103.3 Basements or enclosed crawl spaces with soil floors. In *dwellings* with *basements* or enclosed crawl spaces with soil floors, the following components of a passive submembrane depressurization system shall be installed during construction.

Exception: *Basements* or enclosed crawl spaces that are provided with a continuously operated mechanical exhaust system in accordance with Section R408.3.

AF103.3.1 Soil-gas-retarder. The soil in *basements* and enclosed crawl spaces shall be covered with a soil-gas-retarder. The soil-gas-retarder shall be lapped not less than 12 inches (305 mm) at joints and shall extend to foundation walls enclosing the *basement* or crawl space. The soil-gas-retarder shall fit closely around any pipe, wire or other penetrations of the material. Punctures or tears in the material shall be sealed or covered with additional sheeting.

AF103.3.2 "T" fitting and vent pipe. A 3- or 4-inch "T" fitting shall be inserted beneath the soil-gas-retarder and be connected to a vent pipe. The vent pipe shall extend through the *conditioned space* of the *dwelling* and terminate not less than 12 inches (305 mm) above the roof in a location not less than 10 feet (3048 mm) away from any window or other opening into the *conditioned spaces* of the building that is less than 2 feet (610 mm) below the exhaust point.

AF103.4 Basements or enclosed crawl spaces with concrete floors or other floor systems and slab-on-grade dwellings. The following components of a passive subslab depressurization system shall be installed during construction in slab-on-*grade dwellings* or in *dwellings* with *basements* or crawl spaces with concrete or other floor systems.

AF103.4.1 Sub-slab preparation. A layer of gas-permeable material shall be placed under concrete slabs and other floor systems that directly contact the ground and are within the walls of the dwelling.

AF103.4.2 Soil-gas-retarder. A soil-gas-retarder shall be placed on top of the gas-permeable layer prior to casting the slab or placing the floor assembly. The soil-gas-retarder shall cover the entire floor area with separate sections lapped not less than 12 inches (305 mm). The soil-gas-retarder shall fit closely around any pipe, wire, or other penetrations of the material. Punctures or tears in the material shall be sealed or covered.

AF103.4.3 "T" fitting and vent pipe. Before a slab is cast or other floor system is installed, a "T" fitting shall be inserted below the slab or other floor system and the soil-gas-retarder. The "T" fitting shall be connected to a vent pipe. The vent pipe shall extend through the *conditioned space* of the *dwelling* and terminate not less than 12 inches (305 mm) above the roof in a location not less than 10 feet (3048 mm) away from any window or other opening into the *conditioned spaces* of the building that is less than 2 feet (610 mm) below the exhaust point.

AF103.5 Drain tile and sump used for depressurization. As an alternative to inserting a vent pipe into a "T" fitting, a vent pipe shall be permitted to be inserted directly into an interior perimeter drain tile loop or through a sump cover where the drain tile or sump is exposed to the gas-permeable layer.

AF103.6 Multiple vent pipes. In *dwellings* where interior footings or other barriers separate the gas-permeable layer, each area shall be fitted with an individual vent pipe. Vent pipes shall connect to a single vent that terminates above the roof or each individual vent pipe shall terminate separately above the roof.

AF103.7 Combination foundations. Where *basement* or crawl space floors are on different levels, each level shall have a separate vent pipe. Multiple vent pipes shall be permitted to be connected to a single vent pipe that terminates above the roof. **

AF103.8 Vent pipe drainage. Components of the radon vent pipe system shall be installed to provide positive drainage to the ground beneath the soil-gas-retarder.

AF103.9 Vent pipe identification. Exposed and visible interior vent pipes shall be identified with not less than one *label* on each floor and in accessible *attics*. The *label* shall read: "Radon Reduction System."

AF103.10 Power source and access for future radon fan. To provide for future installation of a radon fan, an electrical circuit terminated in an *approved* box shall be installed during construction in the anticipated location of the radon fans. An accessible clear space 24 inches (610 mm) in diameter by 3 feet (914 mm) in height adjacent to the vent pipe shall be provided at the anticipated location of a future radon fan.

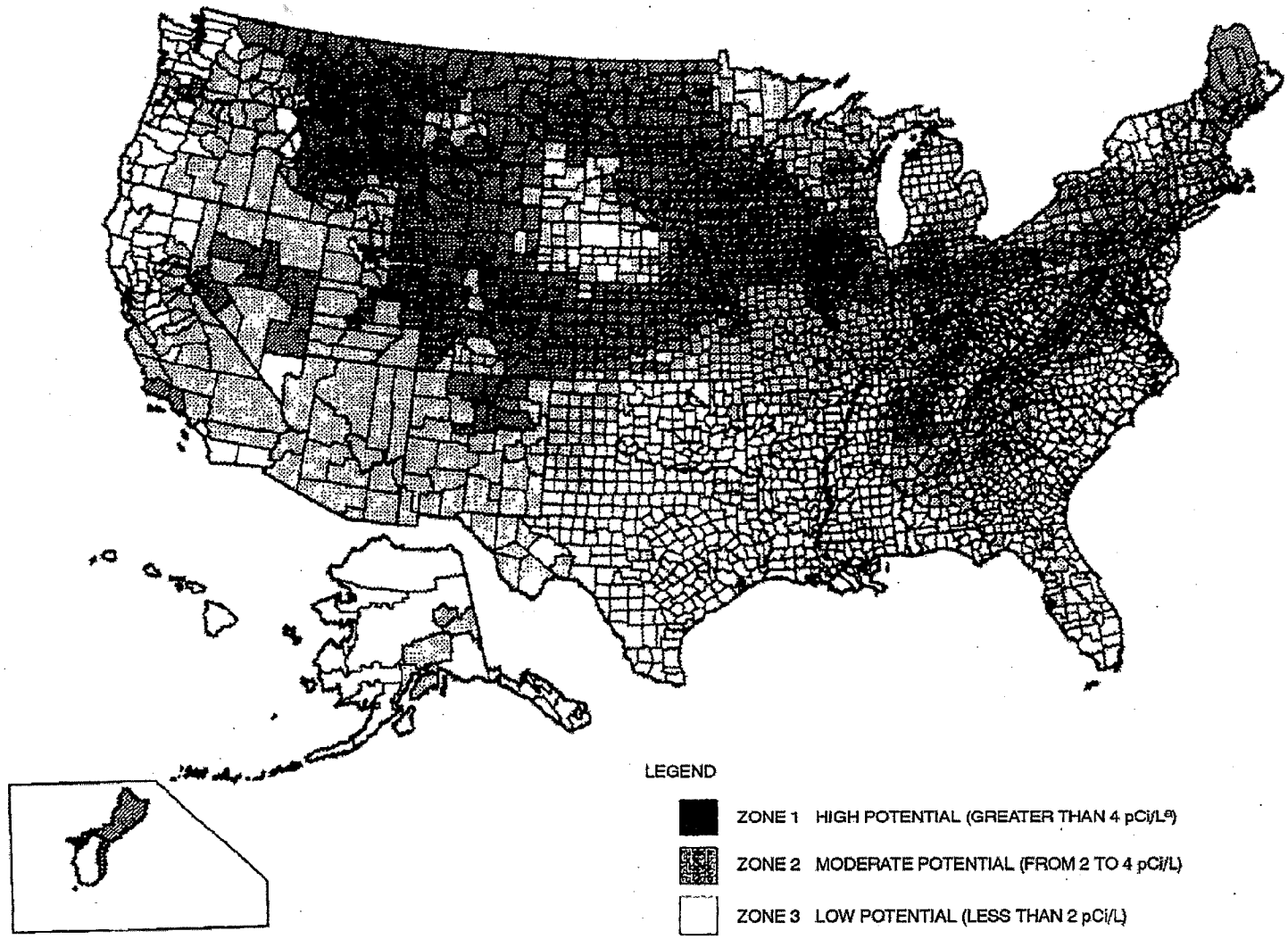

a. pCi/L standard for picocuries per liter of radon gas. The U.S. Environmental Protection Agency (EPA) recommends that homes that measure 4 pCi/L and greater be mitigated.

The EPA and the U.S. Geological Survey have evaluated the radon potential in the United States and have developed a map of radon zones designed to assist *building officials* in deciding whether radon-resistant features are applicable in new construction.

The map assigns each of the 3,141 counties in the United States to one of three zones based on radon potential. Each zone designation reflects the average short-term radon measurement that can be expected to be measured in a building without the implementation of radon-control methods. The radon zone designation of highest priority is Zone 1. Table AF101 lists the Zone 1 counties illustrated on the map. More detailed information can be obtained from state-specific booklets (EPA-402-R-93-021 through 070) available through State Radon Offices or from EPA Regional Offices.

FIGURE AF101
EPA MAP OF RADON ZONES

TABLE AF101(1)
HIGH RADON-POTENTIAL (ZONE 1) COUNTIES[a]

ALABAMA
Calhoun
Clay
Cleburne
Colbert
Coosa
Franklin
Jackson
Lauderdale
Lawrence
Limestone
Madison
Morgan
Talladega

CALIFORNIA
Santa Barbara
Ventura

COLORADO
Adams
Arapahoe
Baca
Bent
Boulder
Chaffee
Cheyenne
Clear Creek
Crowley
Custer
Delta
Denver
Dolores
Douglas
El Paso
Elbert
Fremont
Garfield
Gilpin
Grand
Gunnison
Huerfano
Jackson
Jefferson
Kiowa
Kit Carson
Lake
Larimer
Las Animas
Lincoln
Logan
Mesa
Moffat
Montezuma
Montrose
Morgan
Otero
Ouray
Park
Phillips
Pitkin
Prowers
Pueblo
Rio Blanco
San Miguel
Summit
Teller
Washington
Weld
Yuma

CONNECTICUT
Fairfield
Middlesex
New Haven
New London

GEORGIA
Cobb
De Kalb
Fulton
Gwinnett

IDAHO
Benewah
Blaine
Boise
Bonner
Boundary
Butte
Camas
Clark
Clearwater
Custer
Elmore
Fremont
Gooding
Idaho
Kootenai
Latah
Lemhi
Shoshone
Valley

ILLINOIS
Adams
Boone
Brown
Bureau
Calhoun
Carroll
Cass
Champaign
Coles
De Kalb
De Witt
Douglas
Edgar
Ford
Fulton
Greene
Grundy
Hancock
Henderson
Henry
Iroquois
Jersey
Jo Daviess
Kane
Kendall
Knox
La Salle
Lee
Livingston
Logan
Macon
Marshall
Mason
McDonough
McLean
Menard
Mercer
Morgan
Moultrie
Ogle
Peoria
Piatt
Pike
Putnam
Rock Island
Sangamon
Schuyler
Scott
Stark
Stephenson
Tazewell
Vermilion
Warren
Whiteside
Winnebago
Woodford

INDIANA
Adams
Allen
Bartholomew
Benton
Blackford
Boone
Carroll
Cass
Clark
Clinton
De Kalb
Decatur
Delaware
Elkhart
Fayette
Fountain
Fulton
Grant
Hamilton
Hancock
Harrison
Hendricks
Henry
Howard
Huntington
Jay
Jennings
Johnson
Kosciusko
LaGrange
Lawrence
Madison
Marion
Marshall
Miami
Monroe
Montgomery
Noble
Orange
Putnam
Randolph
Rush
Scott
Shelby
St. Joseph
Steuben
Tippecanoe
Tipton
Union
Vermillion
Wabash
Warren
Washington
Wayne
Wells
White
Whitley

IOWA
All Counties

KANSAS
Atchison
Barton
Brown
Cheyenne
Clay
Cloud
Decatur
Dickinson
Douglas
Ellis
Ellsworth
Finney
Ford
Geary
Gove
Graham
Grant
Gray
Greeley
Hamilton
Haskell
Hodgeman
Jackson
Jewell
Johnson
Kearny
Kingman
Kiowa
Lane
Leavenworth
Lincoln
Logan
Marion
Marshall
McPherson
Meade
Mitchell
Nemaha
Ness
Norton
Osborne
Ottawa
Pawnee
Phillips
Pottawatomie
Pratt
Rawlins
Republic
Rice
Riley
Rooks
Rush
Saline
Scott
Sheridan
Sherman
Smith
Stanton
Thomas
Trego
Wallace
Washington
Wichita
Wyandotte

KENTUCKY
Adair
Allen
Barren
Bourbon
Boyle
Bullitt
Casey
Clark
Cumberland
Fayette
Franklin
Green
Harrison
Hart
Jefferson
Jessamine
Lincoln
Marion
Mercer
Metcalfe
Monroe
Nelson
Pendleton
Pulaski
Robertson
Russell
Scott
Taylor
Warren
Woodford

MAINE
Androscoggin
Aroostook
Cumberland
Franklin
Hancock
Kennebec
Lincoln
Oxford
Penobscot
Piscataquis
Somerset
York

MARYLAND
Baltimore
Calvert
Carroll
Frederick
Harford
Howard
Montgomery
Washington

MASS.
Essex
Middlesex
Worcester

MICHIGAN
Branch
Calhoun
Cass
Hillsdale
Jackson
Kalamazoo
Lenawee
St. Joseph
Washtenaw

MINNESOTA
Becker
Big Stone
Blue Earth
Brown
Carver
Chippewa
Clay
Cottonwood
Dakota
Dodge
Douglas
Faribault
Fillmore
Freeborn
Goodhue
Grant
Hennepin
Houston
Hubbard
Jackson
Kanabec
Kandiyohi
Kittson
Lac Qui Parle
Le Sueur
Lincoln
Lyon
Mahnomen
Marshall
Martin
McLeod
Meeker
Mower
Murray
Nicollet
Nobles
Norman
Olmsted
Otter Tail
Pennington
Pipestone
Polk
Pope
Ramsey
Red Lake
Redwood
Renville
Rice
Rock
Roseau
Scott
Sherburne
Sibley
Stearns
Steele
Stevens
Swift
Todd
Traverse
Wabasha
Wadena
Waseca
Washington
Watonwan
Wilkin
Winona
Wright
Yellow Medicine

MISSOURI
Andrew
Atchison
Buchanan
Cass
Clay
Clinton
Holt
Iron
Jackson
Nodaway
Platte

MONTANA
Beaverhead
Big Horn
Blaine
Broadwater
Carbon
Carter
Cascade
Chouteau
Custer
Daniels
Dawson
Deer Lodge
Fallon
Fergus
Flathead
Gallatin
Garfield
Glacier
Granite
Hill
Jefferson
Judith Basin
Lake
Lewis and Clark
Madison
McCone
Meagher
Missoula
Park
Phillips
Pondera
Powder River
Powell
Prairie
Ravalli
Richland
Roosevelt
Rosebud
Sanders
Sheridan
Silver Bow
Stillwater
Teton
Toole
Valley
Wibaux
Yellowstone

(continued)

3282

TABLE AF101(1)—continued
HIGH RADON-POTENTIAL (ZONE 1) COUNTIES[a]

NEBRASKA
Adams
Boone
Boyd
Burt
Butler
Cass
Cedar
Clay
Colfax
Cuming
Dakota
Dixon
Dodge
Douglas
Fillmore
Franklin
Frontier
Furnas
Gage
Gosper
Greeley
Hamilton
Harlan
Hayes
Hitchcock
Hurston
Jefferson
Johnson
Kearney
Knox
Lancaster
Madison
Nance
Nemaha
Nuckolls
Otoe
Pawnee
Phelps
Pierce
Platte
Polk
Red Willow
Richardson
Saline
Sarpy
Saunders
Seward
Stanton
Thayer
Washington
Wayne
Webster
York

NEVADA
Carson City
Douglas
Eureka
Lander
Lincoln
Lyon
Mineral
Pershing
White Pine

NEW HAMPSHIRE
Carroll

NEW JERSEY
Hunterdon
Mercer
Monmouth
Morris
Somerset
Sussex
Warren

NEW MEXICO
Bernalillo
Colfax
Mora
Rio Arriba
San Miguel
Santa Fe
Taos

NEW YORK
Albany
Allegany
Broome
Cattaraugus
Cayuga
Chautauqua
Chemung
Chenango
Columbia
Cortland
Delaware
Dutchess
Erie
Genesee
Greene
Livingston
Madison
Onondaga
Ontario
Orange
Otsego
Putnam
Rensselaer
Schoharie
Schuyler
Seneca
Steuben
Sullivan
Tioga
Tompkins
Ulster
Washington
Wyoming
Yates

N. CAROLINA
Alleghany
Buncombe
Cherokee
Henderson
Mitchell
Rockingham
Transylvania
Watauga

N. DAKOTA
All Counties

OHIO
Adams
Allen
Ashland
Auglaize
Belmont
Butler
Carroll
Champaign
Clark
Clinton
Columbiana
Coshocton
Crawford
Darke
Delaware
Fairfield
Fayette
Franklin
Greene
Guernsey
Hamilton
Hancock
Hardin
Harrison
Holmes
Huron
Jefferson
Knox
Licking
Logan
Madison
Marion
Mercer
Miami
Montgomery
Morrow
Muskingum
Perry
Pickaway
Pike
Preble
Richland
Ross
Seneca
Shelby
Stark
Summit
Tuscarawas
Union
Van Wert
Warren
Wayne
Wyandot

PENNSYLVANIA
Adams
Allegheny
Armstrong
Beaver
Bedford
Berks
Blair
Bradford
Bucks
Butler
Cameron
Carbon
Centre
Chester
Clarion
Clearfield
Clinton
Columbia
Cumberland
Dauphin
Delaware
Franklin
Fulton
Huntingdon
Indiana
Juniata
Lackawanna
Lancaster
Lebanon
Lehigh
Luzerne
Lycoming
Mifflin
Monroe
Montgomery
Montour
Northampton
Northumberland
Perry
Schuylkill
Snyder
Sullivan
Susquehanna
Tioga
Union
Venango
Westmoreland
Wyoming
York

RHODE ISLAND
Kent
Washington

S. CAROLINA
Greenville

S. DAKOTA
Aurora
Beadle
Bon Homme
Brookings
Brown
Brule
Buffalo
Campbell
Charles Mix
Clark
Clay
Codington
Corson
Davison
Day
Deuel
Douglas
Edmunds
Faulk
Grant
Hamlin
Hand
Hanson
Hughes
Hutchinson
Hyde
Jerauld
Kingsbury
Lake
Lincoln
Lyman
Marshall
McCook
McPherson
Miner
Minnehaha
Moody
Perkins
Potter
Roberts
Sanborn
Spink
Stanley
Sully
Turner
Union
Walworth
Yankton

TENNESEE
Anderson
Bedford
Blount
Bradley
Claiborne
Davidson
Giles
Grainger
Greene
Hamblen
Hancock
Hawkins
Hickman
Humphreys
Jackson
Jefferson
Knox
Lawrence
Lewis
Lincoln
Loudon
Marshall
Maury
McMinn
Meigs
Monroe
Moore
Perry
Roane
Rutherford
Smith
Sullivan
Trousdale
Union
Washington
Wayne
Williamson
Wilson

UTAH
Carbon
Duchesne
Grand
Piute
Sanpete
Sevier
Uintah

VIRGINIA
Alleghany
Amelia
Appomattox
Augusta
Bath
Bland
Botetourt
Bristol
Brunswick
Buckingham
Buena Vista
Campbell
Chesterfield
Clarke
Clifton Forge
Covington
Craig
Cumberland
Danville
Dinwiddie
Fairfax
Falls Church
Fluvanna
Frederick
Fredericksburg
Giles
Goochland
Harrisonburg
Henry
Highland
Lee
Lexington
Louisa
Martinsville
Montgomery
Nottoway
Orange
Page
Patrick
Pittsylvania
Powhatan
Pulaski
Radford
Roanoke
Rockbridge
Rockingham
Russell
Salem
Scott
Shenandoah
Smyth
Spotsylvania
Stafford
Staunton
Tazewell
Warren
Washington
Waynesboro
Winchester
Wythe

WASHINGTON
Clark
Ferry
Okanogan
Pend Oreille
Skamania
Spokane
Stevens

W. VIRGINIA
Berkeley
Brooke
Grant
Greenbrier
Hampshire
Hancock
Hardy
Jefferson
Marshall
Mercer
Mineral
Monongalia
Monroe
Morgan
Ohio
Pendleton
Pocahontas
Preston
Summers
Wetzel

WISCONSIN
Buffalo
Crawford
Dane
Dodge
Door
Fond du Lac
Grant
Green
Green Lake
Iowa
Jefferson
Lafayette
Langlade
Marathon
Menominee
Pepin
Pierce
Portage
Richland
Rock
Shawano
St. Croix
Vernon
Walworth
Washington
Waukesha
Waupaca
Wood

WYOMING
Albany
Big Horn
Campbell
Carbon
Converse
Crook
Fremont
Goshen
Hot Springs
Johnson
Laramie
Lincoln
Natrona
Niobrara
Park
Sheridan
Sublette
Sweetwater
Teton
Uinta
Washakie

a. The EPA recommends that this county listing be supplemented with other available State and local data to further understand the radon potential of a Zone 1 area.

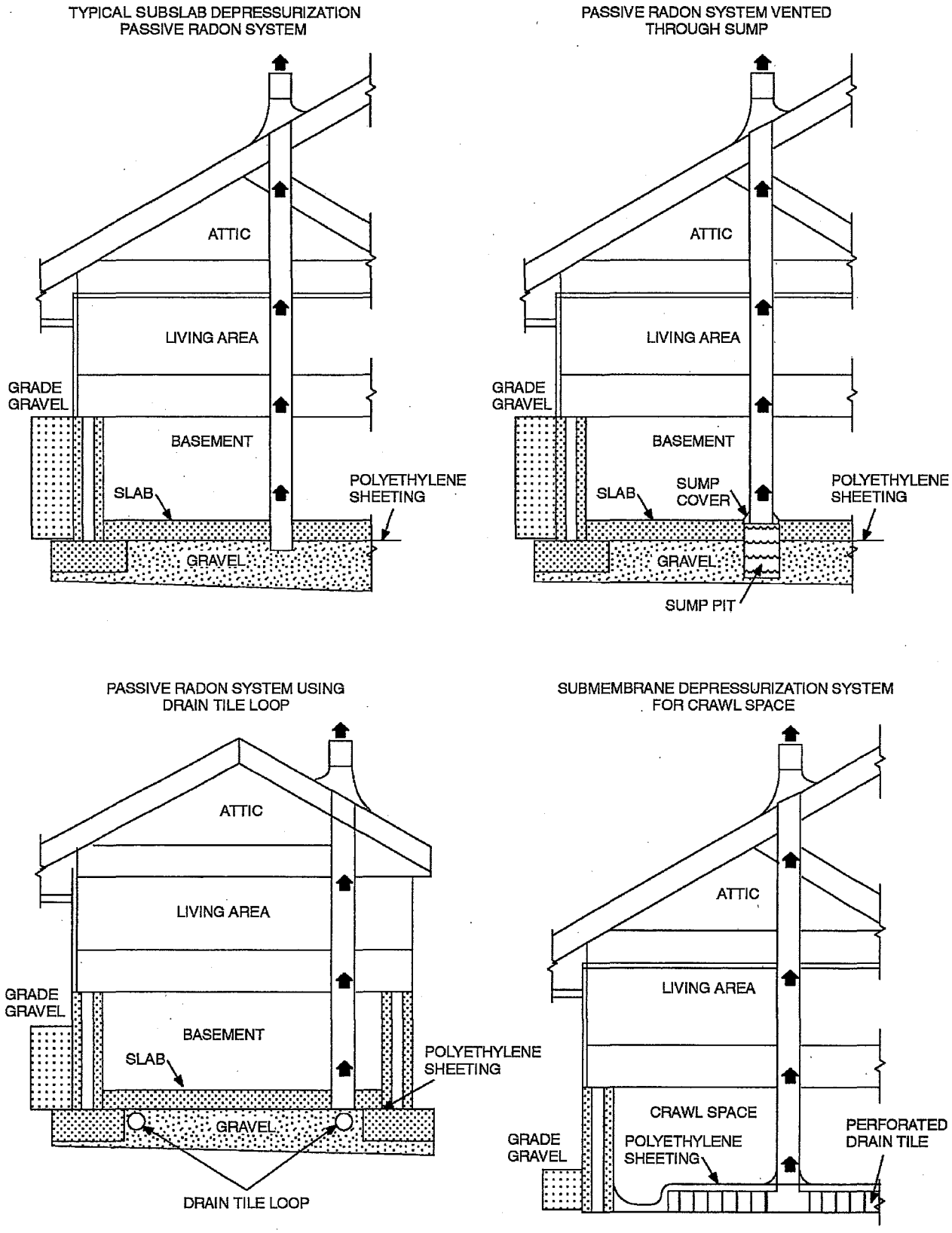

FIGURE AF102
RADON-RESISTANT CONSTRUCTION DETAILS FOR FOUR FOUNDATION TYPES

3284

APPENDIX G

PIPING STANDARDS FOR VARIOUS APPLICATIONS

SECTION AG101
PLASTIC PIPING STANDARDS

AG101.1 Plastic piping. Table AG101.1 provides a list of plastic piping product standards for various applications.

TABLE AG101.1
PLASTIC PIPING STANDARDS FOR VARIOUS APPLICATIONS[a,b]

APPLICATION	LOCATION	TYPE OF PLASTIC PIPING								
		ABS	CPVC	PE	PE-AL-PE	PE-RT	PEX	PEX-AL-PEX	PP	PVC
Central vacuum	System piping	—	—	—	—	—	—	—	—	ASTM F 2158
Foundation drainage	System piping	ASTM F 628	—	ASTM F 405	—	—	—	—	—	ASTM D 2665 ASTM D 2729 ASTM D 3034
Geothermal ground loop	System piping	—	ASTM D 2846 ASTM F 441 ASTM F 442 ASTM F 2855 CSA B137.6	ASTM D 2239 ASTM D 2737 ASTM D 3035	ASTM F 1282	ASTM F 2623 ASTM F 2769	ASTM F 876 CSA B137.5	ASTM F 1281	ASTM F 2389 CSA B137.11	ASTM D 1785 ASTM D 2241 CSA B137.3
	Loop piping	—	—	ASTM D 2239 ASTM D 2737 ASTM D 3035 NSF 358-1	ASTM F 1282	ASTM F 2623 ASTM F 2769	ASTM F 876 CSA B137.5	—	ASTM F 2389 CSA B137.11	—
Gray water	Nonpressure distribution/ collection	ASTM F 628	—	ASTM D 2239 ASTM D 2737 ASTM D 3035 ASTM F 2306	—	—	—	—	ASTM F 2389 CSA B137.11	ASTM D 1785 ASTM D 2729 ASTM D 2949 ASTM D 3034 ASTM F 891 ASTM F 1760 CSA B137.3

(continued)

TABLE AG101.1—continued
PLASTIC PIPING STANDARDS FOR VARIOUS APPLICATIONS[a,b]

APPLICATION	LOCATION	TYPE OF PLASTIC PIPING								
		ABS	CPVC	PE	PE-AL-PE	PE-RT	PEX	PEX-AL-PEX	PP	PVC
Gray water	Pressure/ distribution	—	ASTM D 2846 ASTM F 441 ASTM F 442 ASTM F 2855 CSA B137.6	ASTM D 2239 ASTM D 2737 ASTM D 3035	ASTM F 1282	ASTM F 2623 ASTM F 2769	ASTM F 876 CSA B137.5	ASTM F 1281	ASTM F 2389 CSA B137.11	ASTM D 1785 ASTM D 2241 CSA B137.3
Radiant cooling	Loop piping	—	ASTM D 2846 ASTM F 441 ASTM F 442 ASTM F 2855	ASTM D 2239 ASTM D 2737 ASTM D 3035	ASTM F 1282	ASTM F 2623 ASTM F 2769	ASTM F 876 CSA B137.5	ASTM F 1281	ASTM F 2389 CSA B137.11	—
Radiant heating	Loop piping	—	ASTM D 2846 ASTM F 441 ASTM F 442 ASTM F 2855	—	ASTM F 1282	ASTM F 2623 ASTM F 2769	ASTM F 876 CSA B137.5	ASTM F 1281	ASTM F 2389 CSA B137.11	—
Rainwater harvesting	Nonpressure/ collection	ASTM F 628	—	ASTM F 1901	—	—	—	—	ASTM F 2389 CSA B137.11	ASTM D 1785 ASTM D 2729 ASTM D 2949 ASTM F 891 ASTM F 1760 CSA B137.3
	Pressure/ distribution	—	ASTM D 2846 ASTM F 441 ASTM F 442 ASTM F 2855 CSA B137.6	ASTM D 2239 ASTM D 2737 ASTM D 3035	ASTM F 1282	ASTM F 2623 ASTM F 2769	ASTM F 876 CSA B137.5	ASTM F 1281	ASTM F 2389 CSA B137.11	ASTM D 1785 ASTM D 2241 CSA B137.3

(continued)

TABLE AG101.1—continued
PLASTIC PIPING STANDARDS FOR VARIOUS APPLICATIONS[a,b]

APPLICATION	LOCATION	TYPE OF PLASTIC PIPING								
		ABS	CPVC	PE	PE-AL-PE	PE-RT	PEX	PEX-AL-PEX	PP	PVC
Radon venting	System piping	ASTM F 628	—	—	—	—	—	—	—	ASTM D 1785 ASTM F 891 ASTM F 1760
Reclaimed water	Main to building service	—	ASTM D 2846 ASTM F 441 ASTM F 442 ASTM F 2855 CSA B137.6	ASTM D 3035 AWWA C901 CSA B137.1	ASTM F 1282	ASTM F 2623 ASTM F 2769	ASTM F 876 AWWA C904 CSA B137.5	—	ASTM F 2389 CSA B137.11	ASTM D 1785 ASTM D 2241 AWWA C905 CSA B137.3
	Pressure/ distribution/ irrigation	—	ASTM D 2846 ASTM F 441 ASTM F 442 ASTM F 2855 CSA B137.6	ASTM D 2239 ASTM D 2737 ASTM D 3035	ASTM F 1282	ASTM F 2623 ASTM F 2769	ASTM F 876 CSA B137.5	ASTM F 1281	ASTM F 2389 AWWA C900 CSA B137.11	ASTM D 1785 ASTM D 2241 AWWA C900
Residential fire sprinklers[c]	Sprinkler piping	—	ASTM F 441 ASTM F 442 CSA B137.6 UL 1821	—	—	ASTM F 2769	ASTM F 876 CSA B137.5 UL 1821	—	ASTM F 2389 CSA B137.11	—
Solar heating	Pressure/ distribution	—	ASTM D 2846 ASTM F 441 ASTM F 442 ASTM F 2855	—	—	ASTM F 2623 ASTM F 2769	ASTM F 876 CSA B137.5	ASTM F 1281	ASTM F 2389 CSA B137.11	—

a. This table indicates manufacturing standards for plastic piping materials that are suitable for use in the applications indicated. Such applications support green and sustainable building practices. The system designer or the installer of piping shall verify that the piping chosen for an application complies with local codes and the recommendations of the manufacturer of the piping.
b. Fittings applicable for the piping shall be as recommended by the manufacturer of the piping.
c. Piping systems for fire sprinkler applications shall be listed for the application.

SECTION AG102
REFERENCED STANDARDS

AG102.1 General.

ASTM

F1760—01(2011)	Standard Specification for Coextruded Poly (Vinyl Chloride) (PVC) Non-Pressure Plastic Pipe Having Reprocessed-Recycled Content
F1901—10	Standard Specification for Polyethylene (PE) Pipe and Fittings for Roof Drain Systems
F2158—08	Standard Specification for Residential Central-Vacuum Tube and Fittings
F2306—08	12" to 60" Annular Corrugated Profile-wall Polyethylene (PE) Pipe and Fittings for Gravity Flow Storm Sewer and Sub-surface Drainage Applications

AWWA

900—07	Polyvinyl chloride (PVC) Pressure Pipe and Fabricated Fittings, 4 in. through 12 in. (350 mm through 1200 mm), for Water Transmission and Distribution
905—10	Polyvinyl chloride (PVC) Pressure Pipe and Fabricated Fittings, 14 in. through 48 in. (100 mm through 300 mm)

UL

1821—2011	Standard for Thermoplastic Sprinkler Pipe and Fittings for Fire Protection Service

APPENDIX H

PATIO COVERS

(The provisions contained in this appendix are not mandatory unless specifically referenced in the adopting ordinance.)

SECTION AH101
GENERAL

AH101.1 Scope. Patio covers shall conform to the requirements of Sections AH101 through AH106.

AH101.2 Permitted uses. Patio covers shall be permitted to be detached from or attached to *dwelling units*. Patio covers shall be used only for recreational, outdoor living purposes, and not as carports, garages, storage rooms or habitable rooms.

SECTION AH102
DEFINITION

AH102.1 General. The following word and term shall, for the purposes of this appendix, have the meaning shown herein.

PATIO COVER. A structure with open or glazed walls that is used for recreational, outdoor living purposes associated with a dwelling unit.

SECTION AH103
EXTERIOR WALLS AND OPENINGS

AH 103.1 Enclosure walls. Enclosure walls shall be permitted to be of any configuration, provided the open or glazed area of the longer wall and one additional wall is equal to at least 65 percent of the area below a minimum of 6 feet, 8 inches (2032 mm) of each wall, measured from the floor. Openings shall be permitted to be enclosed with any of the following:

1. Insect screening.
2. Approved translucent or transparent plastic not more than 0.125 inch (3.2 mm) in thickness.
3. Glass conforming to the provisions of Section R308.
4. Any combination of the foregoing.

AH103.2 Light, ventilation and emergency egress. Exterior openings required for light and ventilation shall be permitted to open into a patio structure conforming to Section AH101, provided that the patio structure shall be unenclosed if such openings are serving as emergency egress or rescue openings from sleeping rooms. Where such exterior openings serve as an exit from the *dwelling unit*, the patio structure, unless unenclosed, shall be provided with exits conforming to the provisions of Section R311 of this code.

SECTION AH104
HEIGHT

AH104.1 Height. Patio covers are limited to one-story structures not exceeding 12 feet (3657 mm) in height.

SECTION AH105
STRUCTURAL PROVISIONS

AH105.1 Design loads. Patio covers shall be designed and constructed to sustain, within the stress limits of this code, all dead loads plus a vertical live load of not less than 10 pounds per square foot (0.48 kN/m^2), except that snow loads shall be used where such snow loads exceed this minimum. Such covers shall be designed to resist the minimum wind loads set forth in Section R301.2.1.

AH105.2 Footings. In areas with a frostline depth of zero as specified in Table R301.2(1), a patio cover shall be permitted to be supported on a slab-on-*grade* without footings, provided the slab conforms to the provisions of Section R506, is not less than 3.5 inches (89 mm) thick and the columns do not support live and dead loads in excess of 750 pounds (3.34 kN) per column.

SECTION AH106
SPECIAL PROVISIONS FOR ALUMINUM SCREEN ENCLOSURES IN HURRICANE-PRONE REGIONS

AH106.1 General. Screen enclosures in *hurricane-prone regions* shall be in accordance with the provisions of this section.

AH106.1.1 Habitable spaces. Screen enclosures shall not be considered *habitable spaces*.

AH106.1.2 Minimum ceiling height. Screen enclosures shall have a ceiling height of not less than 7 feet (2134 mm).

AH106.2 Definition. The following word and term shall, for the purposes of this appendix, have the meaning shown herein.

SCREEN ENCLOSURE. A building or part thereof, in whole or in part self-supporting, and having walls of insect screening, and a roof of insect screening, plastic, aluminum or similar lightweight material.

AH106.3 Screen enclosures. Screen enclosures shall comply with Sections AH106.3.1 and AH106.3.2.

AH106.3.1 Thickness. Actual wall thickness of extruded aluminum members shall be not less than 0.040 inch (1.02 mm).

AH106.3.2 Density. Screen density shall be not more than 20 threads per inch by 20 threads per inch mesh.

AH106.4 Design. The structural design of screen enclosures shall comply with Sections AH106.4.1 through AH106.4.3.

AH106.4.1 Wind load. Structural members supporting screen enclosures shall be designed to support the minimum wind loads given in Tables AH106.4(1) and AH106.4(2) for the ultimate design wind speed, V_{ult}, determined from Figure AH106.4.1. Where any value is less than 10 pounds per square foot (psf) (0.479 kN/m^2) use 10 pounds per square foot (0.479 kN/m^2).

AH106.4.2 Deflection limit. For members supporting screen surfaces only, the total load deflection shall not exceed $l/60$. Screen surfaces shall be permitted to include not more than 25-percent solid flexible finishes.

AH106.4.3 Roof live load. The roof live load shall be not less than 10 psf (0.479 kN/m^2).

AH106.5 Footings. In areas with a frost line depth of zero, a screen enclosure shall be permitted to be supported on a concrete slab-on-*grade* without footings, provided the slab conforms to the provisions of Section R506, is not less than $3^1/_2$ inches (89 mm) thick and the columns do not support loads in excess of 750 pounds (3.36 kN) per column.

TABLE AH106.4(2)
ADJUSTMENT FACTOR FOR BUILDING HEIGHT AND EXPOSURE

MEAN ROOF HEIGHT (feet)	EXPOSURE		
	B	C	D
15	1.00	1.21	1.47
20	1.00	1.29	1.55
25	1.00	1.35	1.61
30	1.00	1.40	1.66
35	1.05	1.45	1.70
40	1.09	1.49	1.74
45	1.12	1.53	1.78
50	1.16	1.56	1.81
55	1.19	1.59	1.84
60	1.22	1.62	1.87

For SI: 1 foot = 304.8 mm.

TABLE AH106.4(1)
DESIGN WIND PRESSURES FOR SCREEN ENCLOSURE FRAMING[a, b, e, f, g, h]

LOAD CASE	WALL	ULTIMATE DESIGN WIND SPEED, V_{ult} (mph)									
		100	105	110	120	130	140	150	160	170	180
		Exposure Category B Design Pressure (psf)									
A[c]	Windward and leeward walls (flow thru) and windward wall (nonflow thru) $L/W = 0\text{-}1$	6	7	8	9	11	13	14	16	18	21
A[c]	Windward and leeward walls (flow thru) and windward wall (nonflow thru) $L/W = 2$	7	8	9	11	12	14	16	19	21	24
B[d]	Windward: Nongable roof	9	10	11	13	15	18	21	23	26	30
B[d]	Windward: Gable roof	11	13	14	16	19	22	26	29	33	37
	ROOF										
All[e]	Roof-screen	2	3	3	3	4	4	5	6	7	7
All[e]	Roof-solid	7	8	8	10	12	13	15	18	20	22

For SI: 1 mile per hour = 0.44 m/s, 1 pound per square foot = 0.0479 kPa, 1 foot = 304.8 mm.

a. Design pressure shall be not less than 10 psf in accordance with Section AH106.4.1.

b. Loads are applicable to screen enclosures with a mean roof height of 30 feet or less in Exposure B. For screen enclosures of different heights or exposure, the pressures given shall be adjusted by multiplying the table pressure by the adjustment factor given in Table AH106.4(2).

c. For Load Case A flow thru condition, the pressure given shall be applied simultaneously to both the upwind and downwind screen walls acting in the same direction as the wind. The structure shall also be analyzed for wind coming from the opposite direction. For the nonflow thru condition, the screen enclosure wall shall be analyzed for the load applied acting toward the interior of the enclosure.

d. For Load Case B, the table pressure multiplied by the projected frontal area of the screen enclosure is the total drag force, including drag on screen surfaces parallel to the wind, that must be transmitted to the ground. Use Load Case A for members directly supporting the screen surface perpendicular to the wind. Load Case B loads shall be applied only to structural members that carry wind loads from more than one surface.

e. The roof structure shall be analyzed for the pressure given occurring both upward and downward.

f. Table pressures are MWFRS loads. The design of solid roof panels and their attachments shall be based on component and cladding loads for enclosed or partially enclosed structures as appropriate.

g. Table pressures apply to 20-inch by 20-inch by 0.013-inch mesh screen. For 18-inch by 14-inch by 0.013-inch mesh screen, pressures on screen surfaces shall be permitted to be multiplied by 0.88. For screen densities greater than 20 inches by 20 inches by 0.013 inch, pressures for enclosed buildings shall be used.

h. Linear interpolation shall be permitted.

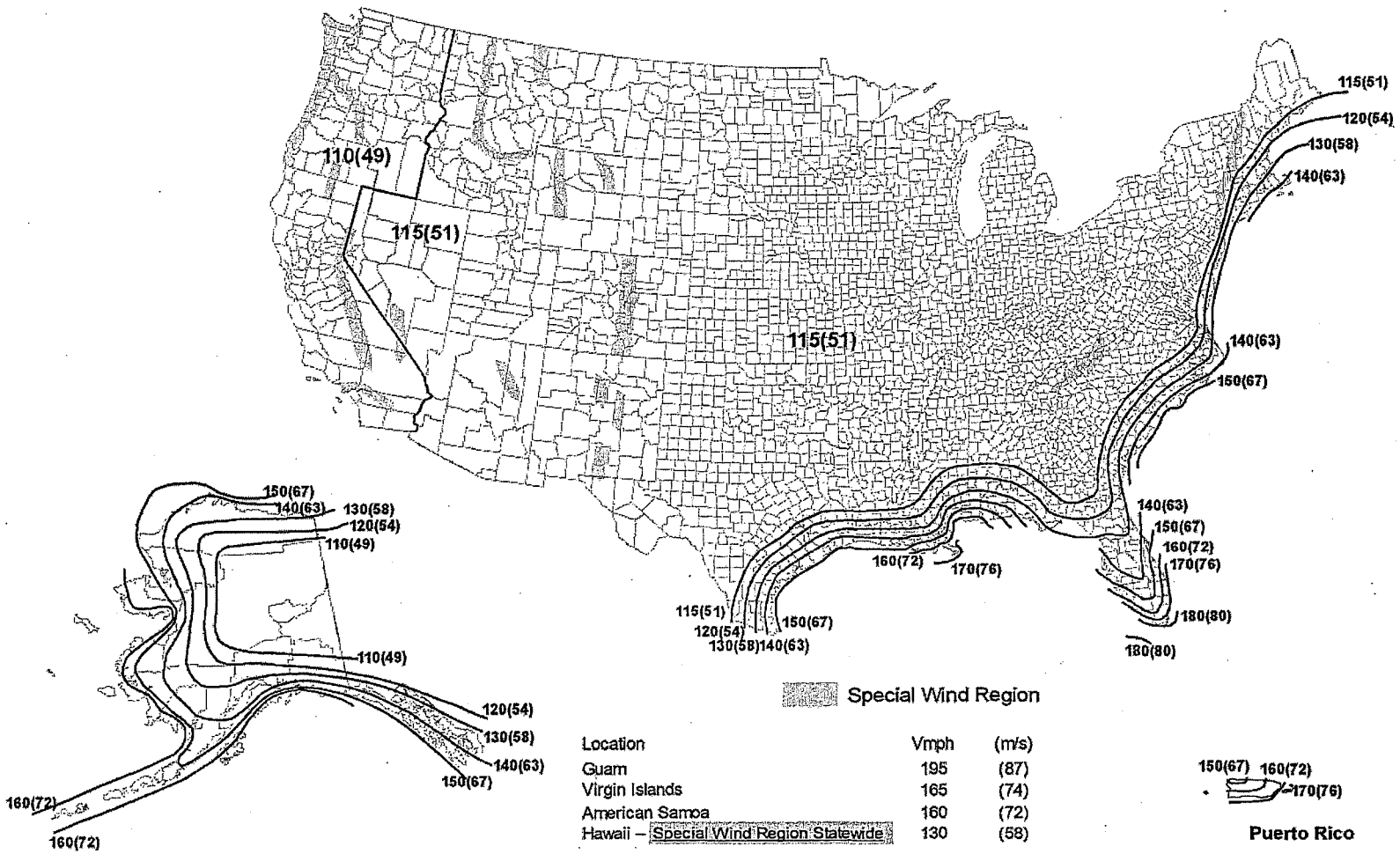

Location	Vmph	(m/s)
Guam	195	(87)
Virgin Islands	165	(74)
American Samoa	160	(72)
Hawaii – Special Wind Region Statewide	130	(58)

Notes:

1. Values are nominal design 3-second gust wind speeds in miles per hour (m/s) at 33 ft (10m) above ground for Exposure C category.
2. Linear interpolation between contours is permitted.
3. Islands and coastal areas outside the last contour shall use the last wind speed contour of the coastal area.
4. Mountainous terrain, gorges, ocean promontories, and special wind regions shall be examined for unusual wind conditions.
5. Wind speeds correspond to approximately a 7% probability of exceedance in 50 years (Annual Exceedance Probability = 0.00143, MRI = 700 Years).

FIGURE AH106.4.1
ULTIMATE DESIGN WIND SPEEDS FOR PATIO COVERS AND SCREEN ENCLOSURES

APPENDIX I

PRIVATE SEWAGE DISPOSAL

(The provisions contained in this appendix are not mandatory unless specifically referenced in the adopting ordinance.)

SECTION AI101
GENERAL

AI101.1 Scope. Private sewage disposal systems shall conform to the *International Private Sewage Disposal Code.*

APPENDIX J

EXISTING BUILDINGS AND STRUCTURES

(The provisions contained in this appendix are not mandatory unless specifically referenced in the adopting ordinance.)

SECTION AJ101
PURPOSE AND INTENT

AJ101.1 General. The purpose of these provisions is to encourage the continued use or reuse of legally existing buildings and structures. These provisions are intended to permit work in existing buildings that is consistent with the purpose of this code. Compliance with these provisions shall be deemed to meet the requirements of this code.

AJ101.2 Classification of work. For purposes of this appendix, work in existing buildings shall be classified into the categories of repair, renovation, *alteration* and reconstruction. Specific requirements are established for each category of work in these provisions.

AJ101.3 Multiple categories of work. Work of more than one category shall be part of a single work project. Related work permitted within a 12-month period shall be considered to be a single work project. Where a project includes one category of work in one building area and another category of work in a separate and unrelated area of the building, each project area shall comply with the requirements of the respective category of work. Where a project with more than one category of work is performed in the same area or in related areas of the building, the project shall comply with the requirements of the more stringent category of work.

SECTION AJ102
COMPLIANCE

AJ102.1 General. Regardless of the category of work being performed, the work shall not cause the structure to become unsafe or adversely affect the performance of the building; shall not cause an existing mechanical or plumbing system to become unsafe, hazardous, insanitary or overloaded; and unless expressly permitted by these provisions, shall not make the building any less compliant with this code or to any previously *approved* alternative arrangements than it was before the work was undertaken.

AJ102.2 Requirements by category of work. Repairs shall conform to the requirements of Section AJ301. Renovations shall conform to the requirements of Section AJ401. *Alterations* shall conform to the requirements of Section AJ501 and the requirements for renovations. Reconstructions shall conform to the requirements of Section AJ601 and the requirements for *alterations* and renovations.

AJ102.3 Smoke detectors. Regardless of the category of work, smoke detectors shall be provided where required by Section R314.3.1.

AJ102.4 Replacement windows. Regardless of the category of work, where an existing window, including the sash and glazed portion, or safety glazing is replaced, the replacement window or safety glazing shall comply with the requirements of Sections AJ102.4.1 through AJ102.4.3, as applicable.

AJ102.4.1 Energy efficiency. Replacement windows shall comply with the requirements of Chapter 11.

AJ102.4.2 Safety glazing. Replacement glazing in hazardous locations shall comply with the safety glazing requirements of Section R308.

AJ102.4.3 Emergency escape and rescue openings. Where windows are required to provide emergency escape and rescue openings, replacement windows shall be exempt from the maximum sill height requirements of Section R310.1 and the requirements of Sections R310.1.1, R310.1.2, R310.1.3 and R310.2 provided that the replacement window meets the following conditions:

1. The replacement window is the manufacturer's largest standard size window that will fit within the existing frame or existing rough opening. The replacement window shall be permitted to be of the same operating style as the existing window or a style that provides for an equal or greater window opening area than the existing window.
2. The replacement window is not part of a change of occupancy.
3. Window opening control devices complying with ASTM F 2090 shall be permitted for use on windows required to provide emergency escape and rescue openings.

AJ102.4.4 Window control devices. Where window fall prevention devices complying with ASTM F 2090 are not provided, window opening control devices complying with ASTM F 2090 shall be installed where an existing window is replaced and where all of the following apply to the replacement window:

1. The window is operable.
2. The window replacement includes replacement of the sash and the frame.
3. The top of the sill of the window opening is at a height less than 24 inches (610 mm) above the finished floor.
4. The window will permit openings that will allow passage of a 4-inch-diameter (102 mm) sphere where the window is in its largest opened position.
5. The vertical distance from the top of the sill of the window opening to the finished grade or other surface below, on the exterior of the building, is greater than 72 inches (1829 mm).

The window opening control device, after operation to release the control device allowing the window to fully

open, shall not reduce the minimum net clear opening area of the window unit.

AJ102.5 Flood hazard areas. Work performed in existing buildings located in a flood hazard area as established by Table R301.2(1) shall be subject to the provisions of Section R105.3.1.1.

AJ102.6 Equivalent alternatives. Work performed in accordance with the *International Existing Building Code* shall be deemed to comply with the provisions of this appendix. These provisions are not intended to prevent the use of any alternative material, alternative design or alternative method of construction not specifically prescribed herein, provided that any alternative has been deemed to be equivalent and its use authorized by the *building official.*

AJ102.7 Other alternatives. Where compliance with these provisions or with this code as required by these provisions is technically infeasible or would impose disproportionate costs because of construction or dimensional difficulties, the building official shall have the authority to accept alternatives. These alternatives include materials, design features and operational features.

AJ102.8 More restrictive requirements. Buildings or systems in compliance with the requirements of this code for new construction shall not be required to comply with any more restrictive requirement of these provisions.

AJ102.9 Features exceeding code requirements. Elements, components and systems of existing buildings with features that exceed the requirements of this code for new construction, and are not otherwise required as part of *approved* alternative arrangements or deemed by the *building official* to be required to balance other building elements not complying with this code for new construction, shall not be prevented by these provisions from being modified as long as they remain in compliance with the applicable requirements for new construction.

SECTION AJ103
PRELIMINARY MEETING

AJ103.1 General. If a building *permit* is required at the request of the prospective *permit* applicant, the *building official* or his or her designee shall meet with the prospective applicant to discuss plans for any proposed work under these provisions prior to the application for the *permit.* The purpose of this preliminary meeting is for the *building official* to gain an understanding of the prospective applicant's intentions for the proposed work, and to determine, together with the prospective applicant, the specific applicability of these provisions.

SECTION AJ104
EVALUATION OF AN EXISTING BUILDING

AJ104.1 General. The *building official* shall have the authority to require an existing building to be investigated and evaluated by a registered *design professional* in the case of proposed reconstruction of any portion of a building. The evaluation shall determine the existence of any potential nonconformities to these provisions, and shall provide a basis for determining the impact of the proposed changes on the performance of the building. The evaluation shall use the following sources of information, as applicable:

1. Available documentation of the existing building.
   1.1. Field surveys.
   1.2. Tests (nondestructive and destructive).
   1.3. Laboratory analysis.

Exception: Detached one- or two-family dwellings that are not irregular buildings under Section R301.2.2.2.5 and are not undergoing an extensive reconstruction shall not be required to be evaluated.

SECTION AJ105
PERMIT

AJ105.1 Identification of work area. The work area shall be clearly identified on the *permits* issued under these provisions.

SECTION AJ201
DEFINITIONS

AJ201.1 General. For purposes of this appendix, the terms used are defined as follows.

ALTERATION. The reconfiguration of any space; the *addition* or elimination of any door or window; the reconfiguration or extension of any system; or the installation of any additional *equipment.*

CATEGORIES OF WORK. The nature and extent of construction work undertaken in an existing building. The categories of work covered in this appendix, listed in increasing order of stringency of requirements, are repair, renovation, *alteration* and reconstruction.

DANGEROUS. Where the stresses in any member; the condition of the building, or any of its components or elements or attachments; or other condition that results in an overload exceeding 150 percent of the stress allowed for the member or material in this code.

EQUIPMENT OR FIXTURE. Any plumbing, heating, electrical, ventilating, air-conditioning, refrigerating and fire protection *equipment*; and elevators, dumb waiters, boilers, pressure vessels, and other mechanical facilities or installations that are related to building services.

LOAD-BEARING ELEMENT. Any column, girder, beam, joist, truss, rafter, wall, floor or roof sheathing that supports any vertical load in addition to its own weight, or any lateral load.

MATERIALS AND METHODS REQUIREMENTS. Those requirements in this code that specify material standards; details of installation and connection; joints; penetrations; and continuity of any element, component or system in the building. The required quantity, fire resistance, flame spread, acoustic or thermal performance, or other performance attribute is specifically excluded from materials and methods requirements.

RECONSTRUCTION. The reconfiguration of a space that affects an exit, a renovation or *alteration* where the work area

is not permitted to be occupied because existing means-of-egress and fire protection systems, or their equivalent, are not in place or continuously maintained; or there are extensive *alterations* as defined in Section AJ501.3.

REHABILITATION. Any repair, renovation, *alteration* or reconstruction work undertaken in an existing building.

RENOVATION. The change, strengthening or *addition* of load-bearing elements; or the refinishing, replacement, bracing, strengthening, upgrading or extensive repair of existing materials, elements, components, *equipment* or fixtures. Renovation does not involve reconfiguration of spaces. Interior and exterior painting are not considered refinishing for purposes of this definition, and are not renovation.

REPAIR. The patching, restoration or minor replacement of materials, elements, components, *equipment* or fixtures for the purposes of maintaining those materials, elements, components, *equipment* or fixtures in good or sound condition.

WORK AREA. That portion of a building affected by any renovation, *alteration* or reconstruction work as initially intended by the owner and indicated as such in the *permit*. Work area excludes other portions of the building where incidental work entailed by the intended work must be performed, and portions of the building where work not initially intended by the owner is specifically required by these provisions for a renovation, *alteration* or reconstruction.

SECTION AJ301
REPAIRS

AJ301.1 Materials. Except as otherwise required herein, work shall be done using like materials or materials permitted by this code for new construction.

AJ301.1.1 Hazardous materials. Hazardous materials no longer permitted, such as asbestos and lead-based paint, shall not be used.

AJ301.1.2 Plumbing materials and supplies. The following plumbing materials and supplies shall not be used:

1. All-purpose solvent cement, unless *listed* for the specific application.
2. Flexible traps and tailpieces, unless *listed* for the specific application.
3. Solder having more than 0.2 percent lead in the repair of potable water systems.

AJ301.2 Water closets. Where any water closet is replaced with a newly manufactured water closet, the replacement water closet shall comply with the requirements of Section P2903.2.

AJ301.3 Electrical. Repair or replacement of existing electrical wiring and *equipment* undergoing repair with like material shall be permitted.

Exceptions:

1. Replacement of electrical receptacles shall comply with the requirements of Chapters 34 through 43.
2. Plug fuses of the Edison-base type shall be used for replacements only where there is not evidence of overfusing or tampering in accordance with the applicable requirements of Chapters 34 through 43.
3. For replacement of nongrounding-type receptacles with grounding-type receptacles and for branch circuits that do not have an *equipment* grounding conductor in the branch circuitry, the grounding conductor of a grounding-type receptacle outlet shall be permitted to be grounded to any accessible point on the grounding electrode system, or to any accessible point on the grounding electrode conductor, as allowed and described in Chapters 34 through 43.

SECTION AJ401
RENOVATIONS

AJ401.1 Materials and methods. The work shall comply with the materials and methods requirements of this code.

AJ401.2 Door and window dimensions. Minor reductions in the clear opening dimensions of replacement doors and windows that result from the use of different materials shall be allowed, whether or not they are permitted by this code.

AJ401.3 Interior finish. Wood paneling and textile wall coverings used as an interior finish shall comply with the flame spread requirements of Section R302.9.

AJ401.4 Structural. Unreinforced masonry buildings located in Seismic Design Category D_2 or E shall have parapet bracing and wall anchors installed at the roofline whenever a reroofing *permit* is issued. Such parapet bracing and wall anchors shall be of an *approved* design.

SECTION AJ501
ALTERATIONS

AJ501.1 Newly constructed elements. Newly constructed elements, components and systems shall comply with the requirements of this code.

Exceptions:

1. Openable windows may be added without requiring compliance with the light and *ventilation* requirements of Section R303.
2. Newly installed electrical *equipment* shall comply with the requirements of Section AJ501.5.

AJ501.2 Nonconformities. The work shall not increase the extent of noncompliance with the requirements of Section AJ601, or create nonconformity to those requirements that did not previously exist.

AJ501.3 Extensive alterations. Where the total area of all of the work areas included in an *alteration* exceeds 50 percent of the area of the *dwelling unit*, the work shall be considered to be a reconstruction and shall comply with the requirements of these provisions for reconstruction work.

Exception: Work areas in which the *alteration* work is exclusively plumbing, mechanical or electrical shall not be included in the computation of the total area of all work areas.

AJ501.4 Structural. The minimum design loads for the structure shall be the loads applicable at the time the building

was constructed, provided that a dangerous condition is not created. Structural elements that are uncovered during the course of the *alteration* and that are found to be unsound or dangerous shall be made to comply with the applicable requirements of this code.

AJ501.5 Electrical equipment and wiring.

AJ501.5.1 Materials and methods. Newly installed electrical *equipment* and wiring relating to work done in any work area shall comply with the materials and methods requirements of Chapters 34 through 43.

Exception: Electrical *equipment* and wiring in newly installed partitions and ceilings shall comply with the applicable requirements of Chapters 34 through 43.

AJ501.5.2 Electrical service. Service to the *dwelling unit* shall be not less than 100 ampere, three-wire capacity and service *equipment* shall be dead front having no live parts exposed that could allow accidental contact. Type "S" fuses shall be installed where fused *equipment* is used.

Exception: Existing service of 60 ampere, three-wire capacity, and feeders of 30 ampere or larger two- or three-wire capacity shall be accepted if adequate for the electrical load being served.

AJ501.5.3 Additional electrical requirements. Where the work area includes any of the following areas within a *dwelling unit*, the requirements of Sections AJ501.5.3.1 through AJ501.5.3.5 shall apply.

AJ501.5.3.1 Enclosed areas. Enclosed areas other than closets, kitchens, *basements*, garages, hallways, laundry areas and bathrooms shall have not less than two duplex receptacle outlets, or one duplex receptacle outlet and one ceiling- or wall-type lighting outlet.

AJ501.5.3.2 Kitchen and laundry areas. Kitchen areas shall have not less than two duplex receptacle outlets. Laundry areas shall have not less than one duplex receptacle outlet located near the laundry *equipment* and installed on an independent circuit.

AJ501.5.3.3 Ground-fault circuit-interruption. Ground-fault circuit-interruption shall be provided on newly installed receptacle outlets if required by Chapters 34 through 43.

AJ501.5.3.4 Lighting outlets. Not less than one lighting outlet shall be provided in every bathroom, hallway, stairway, attached garage and detached garage with electric power to illuminate outdoor entrances and exits, and in utility rooms and *basements* where these spaces are used for storage or contain *equipment* requiring service.

AJ501.5.3.5 Clearance. Clearance for electrical service *equipment* shall be provided in accordance with Chapters 34 through 43.

AJ501.6 Ventilation. Reconfigured spaces intended for occupancy and spaces converted to habitable or occupiable space in any work area shall be provided with *ventilation* in accordance with Section R303.

AJ501.7 Ceiling height. *Habitable spaces* created in existing *basements* shall have ceiling heights of not less than 6 feet, 8 inches (2032 mm), except that the ceiling height at obstructions shall be not less than 6 feet 4 inches (1930 mm) from the *basement* floor. Existing finished ceiling heights in nonhabitable spaces in *basements* shall not be reduced.

AJ501.8 Stairs.

AJ501.8.1 Stair width. Existing *basement* stairs and handrails not otherwise being altered or modified shall be permitted to maintain their current clear width at, above and below existing handrails.

AJ501.8.2 Stair headroom. Headroom height on existing *basement* stairs being altered or modified shall not be reduced below the existing stairway finished headroom. Existing *basement* stairs not otherwise being altered shall be permitted to maintain the current finished headroom.

AJ501.8.3 Stair landing. Landings serving existing *basement* stairs being altered or modified shall not be reduced below the existing stairway landing depth and width. Existing *basement* stairs not otherwise being altered shall be permitted to maintain the current landing depth and width.

SECTION AJ601
RECONSTRUCTION

AJ601.1 Stairways, handrails and guards.

AJ601.1.1 Stairways. Stairways within the work area shall be provided with illumination in accordance with Section R303.6.

AJ601.1.2 Handrails. Every required exit stairway that has four or more risers, is part of the means of egress for any work area, and is not provided with at least one handrail, or in which the existing handrails are judged to be in danger of collapsing, shall be provided with handrails designed and installed in accordance with Section R311 for the full length of the run of steps on not less than one side.

AJ601.1.3 Guards. Every open portion of a stair, landing or balcony that is more than 30 inches (762 mm) above the floor or *grade* below, is part of the egress path for any work area, and does not have *guards*, or in which the existing *guards* are judged to be in danger of collapsing, shall be provided with *guards* designed and installed in accordance with Section R312.

AJ601.2 Wall and ceiling finish. The interior finish of walls and ceilings in any work area shall comply with the requirements of Section R302.9. Existing interior finish materials that do not comply with those requirements shall be removed or shall be treated with an *approved* fire-retardant coating in accordance with the manufacturer's instructions to secure compliance with the requirements of this section.

AJ601.3 Separation walls. Where the work area is in an attached *dwelling unit*, walls separating *dwelling units* that are not continuous from the foundation to the underside of the roof sheathing shall be constructed to provide a continuous fire separation using construction materials consistent with the existing wall or complying with the requirements for new structures. Performance of work shall be required only on the

side of the wall of the *dwelling unit* that is part of the work area.

AJ601.4 Ceiling height. *Habitable spaces* created in existing *basements* shall have ceiling heights of not less than 6 feet, 8 inches (2032 mm), except that the ceiling height at obstructions shall be not less than 6 feet 4 inches (1930 mm) from the *basement* floor. Existing finished ceiling heights in nonhabitable spaces in *basements* shall not be reduced.

3300

APPENDIX K

SOUND TRANSMISSION

(The provisions contained in this appendix are not mandatory unless specifically referenced in the adopting ordinance.)

SECTION AK101
GENERAL

AK101.1 General. Wall and floor-ceiling assemblies separating *dwelling units*, including those separating adjacent *townhouse* units, shall provide air-borne sound insulation for walls, and both air-borne and impact sound insulation for floor-ceiling assemblies.

SECTION AK102
AIR-BORNE SOUND

AK102.1 General. Air-borne sound insulation for wall and floor-ceiling assemblies shall meet a sound transmission class (STC) rating of 45 when tested in accordance with ASTM E 90. Penetrations or openings in construction assemblies for piping; electrical devices; recessed cabinets; bathtubs; soffits; or heating, ventilating or exhaust ducts shall be sealed, lined, insulated or otherwise treated to maintain the required ratings. *Dwelling unit* entrance doors, which share a common space, shall be tight fitting to the frame and sill.

AK102.1.1 Masonry. The sound transmission class of concrete masonry and clay masonry assemblies shall be calculated in accordance with TMS 0302 or determined through testing in accordance with ASTM E 90.

SECTION AK103
STRUCTURAL-BORNE SOUND

AK103.1 General. Floor/ceiling assemblies between *dwelling units*, or between a *dwelling unit* and a public or service area within a structure, shall have an impact insulation class (IIC) rating of not less than 45 when tested in accordance with ASTM E 492.

SECTION AK104
REFERENCED STANDARDS

ASTM

ASTM E 90—04 Test Method for Laboratory Measurement of Air-borne Sound Transmission Loss of Building Partitions and Elements AK102

ASTM E 492—09 Specification for Laboratory Measurement of Impact Sound Transmission through Floor-ceiling Assemblies Using the Tapping Machine. AK103

The Masonry Society

TMS 0302—12 Standard for Determining the Sound Transmission Class Rating for Masonry Walls AK102.1.1

APPENDIX L

PERMIT FEES

(The provisions contained in this appendix are not mandatory unless specifically referenced in the adopting ordinance.)

TOTAL VALUATION	FEE
$1 to $ 500	$24
$501 to $2,000	$24 for the first $500; plus $3 for each additional $100 or fraction thereof, up to and including $2,000
$2,001 to $40,000	$69 for the first $2,000; plus $11 for each additional $1,000 or fraction thereof, up to and including $40,000
$40,001 to $100,000	$487 for the first $40,000; plus $9 for each additional $1,000 or fraction thereof, up to and including $100,000
$100,001 to $500,000	$1,027 for the first $100,000; plus $7 for each additional $1,000 or fraction thereof, up to and including $500,000
$500,001 to $1,000,000	$3,827 for the first $500,000; plus $5 for each additional $1,000 or fraction thereof, up to and including $1,000,000
$1,000,001 to $5,000,000	$6,327 for the first $1,000,000; plus $3 for each additional $1,000 or fraction thereof, up to and including $5,000,000
$5,000,001 and over	$18,327 for the first $5,000,000; plus $1 for each additional $1,000 or fraction thereof

APPENDIX M

HOME DAY CARE—R-3 OCCUPANCY

(The provisions contained in this appendix are not mandatory unless specifically referenced in the adopting ordinance.)

SECTION AM101
GENERAL

AM101.1 General. This appendix shall apply to a home day care operated within a *dwelling*. It is to include buildings and structures occupied by persons of any age who receive custodial care for less than 24 hours by individuals other than parents or guardians or relatives by blood, marriage, or adoption, and in a place other than the home of the person cared for.

SECTION AM102
DEFINITION

EXIT ACCESS. That portion of a means-of-egress system that leads from any occupied point in a building or structure to an exit.

SECTION AM103
MEANS OF EGRESS

AM103.1 Exits required. If the occupant load of the residence is more than nine, including those who are residents, during the time of operation of the day care, two exits are required from the ground-level *story*. Two exits are required from a home day care operated in a *manufactured home* regardless of the occupant load. Exits shall comply with Section R311.

AM103.1.1 Exit access prohibited. An exit access from the area of day care operation shall not pass through bathrooms, bedrooms, closets, garages, fenced rear *yards* or similar areas.

Exception: An exit may discharge into a fenced *yard* if the gate or gates remain unlocked during day care hours. The gates may be locked if there is an area of refuge located within the fenced *yard* and more than 50 feet (15 240 mm) from the *dwelling*. The area of refuge shall be large enough to allow 5 square feet (0.5 m^2) per occupant.

AM103.1.2 Basements. If the *basement* of a *dwelling* is to be used in the day care operation, two exits are required from the *basement* regardless of the occupant load. One of the exits may pass through the *dwelling* and the other must lead directly to the exterior of the *dwelling*.

Exception: An emergency and escape window complying with Section R310 and which does not conflict with Section AM103.1.1 may be used as the second means of egress from a *basement*.

AM103.1.3 Yards. If the *yard* is to be used as part of the day care operation it shall be fenced.

AM103.1.3.1 Type of fence and hardware. The fence shall be of durable materials and be at least 6 feet (1529 mm) tall, completely enclosing the area used for the day care operations. Each opening shall be a gate or door equipped with a self-closing and self-latching device to be installed at a minimum of 5 feet (1528 mm) above the ground.

Exception: The door of any *dwelling* which forms part of the enclosure need not be equipped with self-closing and self-latching devices.

AM103.1.3.2 Construction of fence. Openings in the fence, wall or enclosure required by this section shall have intermediate rails or an ornamental pattern that do not allow a sphere 4 inches (102 mm) in diameter to pass through. In addition, the following criteria must be met:

1. The maximum vertical clearance between *grade* and the bottom of the fence, wall or enclosure shall be 2 inches (51 mm).
2. Solid walls or enclosures that do not have openings, such as masonry or stone walls, shall not contain indentations or protrusions, except for tooled masonry joints.
3. Maximum mesh size for chain link fences shall be $1^1/_4$ inches (32 mm) square, unless the fence has slats at the top or bottom which reduce the opening to no more than $1^3/_4$ inches (44 mm). The wire shall be not less than 9 gage [0.148 inch (3.8 mm)].

AM103.1.3.3 Decks. Decks that are more than 12 inches (305 mm) above *grade* shall have a guard in compliance with Section R312.

AM103.2 Width and height of an exit. The minimum width of a required exit is 36 inches (914 mm) with a net clear width of 32 inches (813 mm). The minimum height of a required exit is 6 feet, 8 inches (2032 mm).

AM103.3 Type of lock and latches for exits. Regardless of the occupant load served, exit doors shall be openable from the inside without the use of a key or any special knowledge or effort. When the occupant load is 10 or less, a night latch, dead bolt or security chain may be used, provided such devices are openable from the inside without the use of a key or tool, and mounted at a height not to exceed 48 inches (1219 mm) above the finished floor.

AM103.4 Landings. Landings for stairways and doors shall comply with Section R311, except that landings shall be required for the exterior side of a sliding door when a home day care is being operated in a Group R-3 occupancy.

SECTION AM104
SMOKE DETECTION

AM104.1 General. Smoke detectors shall be installed in *dwelling* units used for home day care operations. Detectors shall be installed in accordance with the approved manufacturer's instructions. If the current smoke detection system in the *dwelling* is not in compliance with the currently adopted code for smoke detection, it shall be upgraded to meet the currently adopted code requirements and Section AM103 before day care operations commence.

AM104.2 Power source. Required smoke detectors shall receive their primary power from the building wiring when that wiring is served from a commercial source and shall be equipped with a battery backup. The detector shall emit a signal when the batteries are low. Wiring shall be permanent and without a disconnecting switch other than those required for overcurrent protection. Required smoke detectors shall be interconnected so if one detector is activated, all detectors are activated.

AM104.3 Location. A detector shall be located in each bedroom and any room that is to be used as a sleeping room, and centrally located in the corridor, hallway or area giving access to each separate sleeping area. When the *dwelling* unit has more than one *story*, and in *dwellings* with *basements*, a detector shall be installed on each *story* and in the *basement*. In *dwelling* units where a *story* or *basement* is split into two or more levels, the smoke detector shall be installed on the upper level, except that when the lower level contains a sleeping area, a detector shall be installed on each level. When sleeping rooms are on the upper level, the detector shall be placed at the ceiling of the upper level in close proximity to the stairway. In *dwelling* units where the ceiling height of a room open to the hallway serving the bedrooms or sleeping areas exceeds that of the hallway by 24 inches (610 mm) or more, smoke detectors shall be installed in the hallway and the adjacent room. Detectors shall sound an alarm audible in all sleeping areas of the *dwelling* unit in which they are located.

APPENDIX N

VENTING METHODS

(This appendix is informative and is not part of the code. This appendix provides examples of various venting methods.)

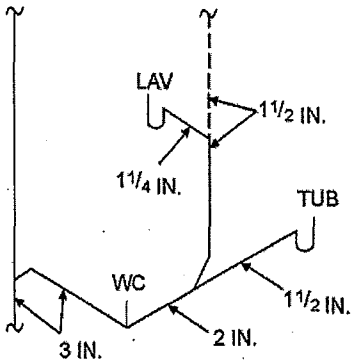

A. TYPICAL SINGLE-BATH ARRANGEMENT

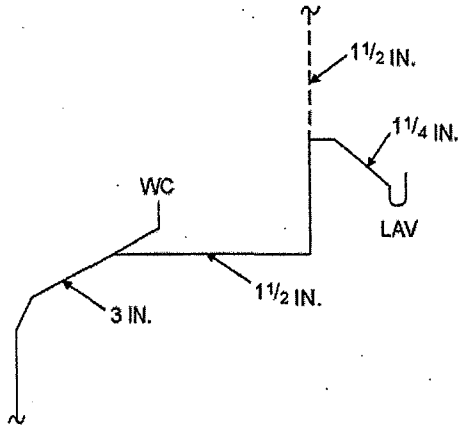

B. TYPICAL POWDER ROOM

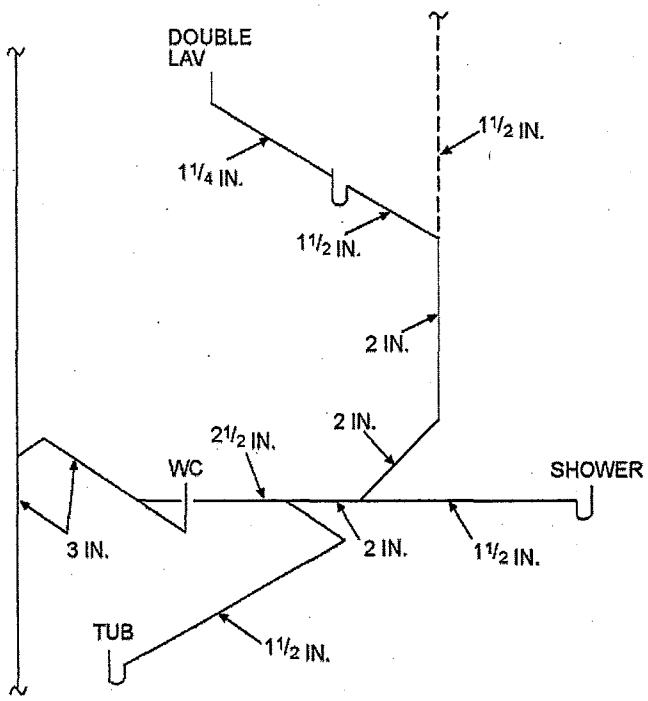

C. MORE ELABORATE SINGLE-BATH ARRANGEMENT

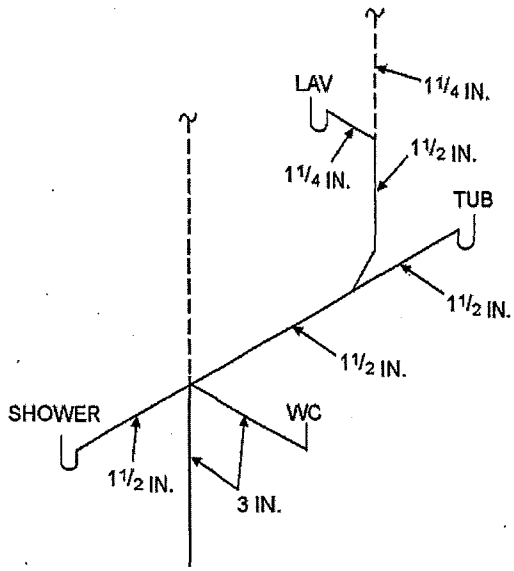

D. COMBINATION WET AND STACK VENTING WITH STACK FITTING

For SI: 1 inch = 25.4 mm.

FIGURE N1
TYPICAL SINGLE-BATH WET-VENT ARRANGEMENTS

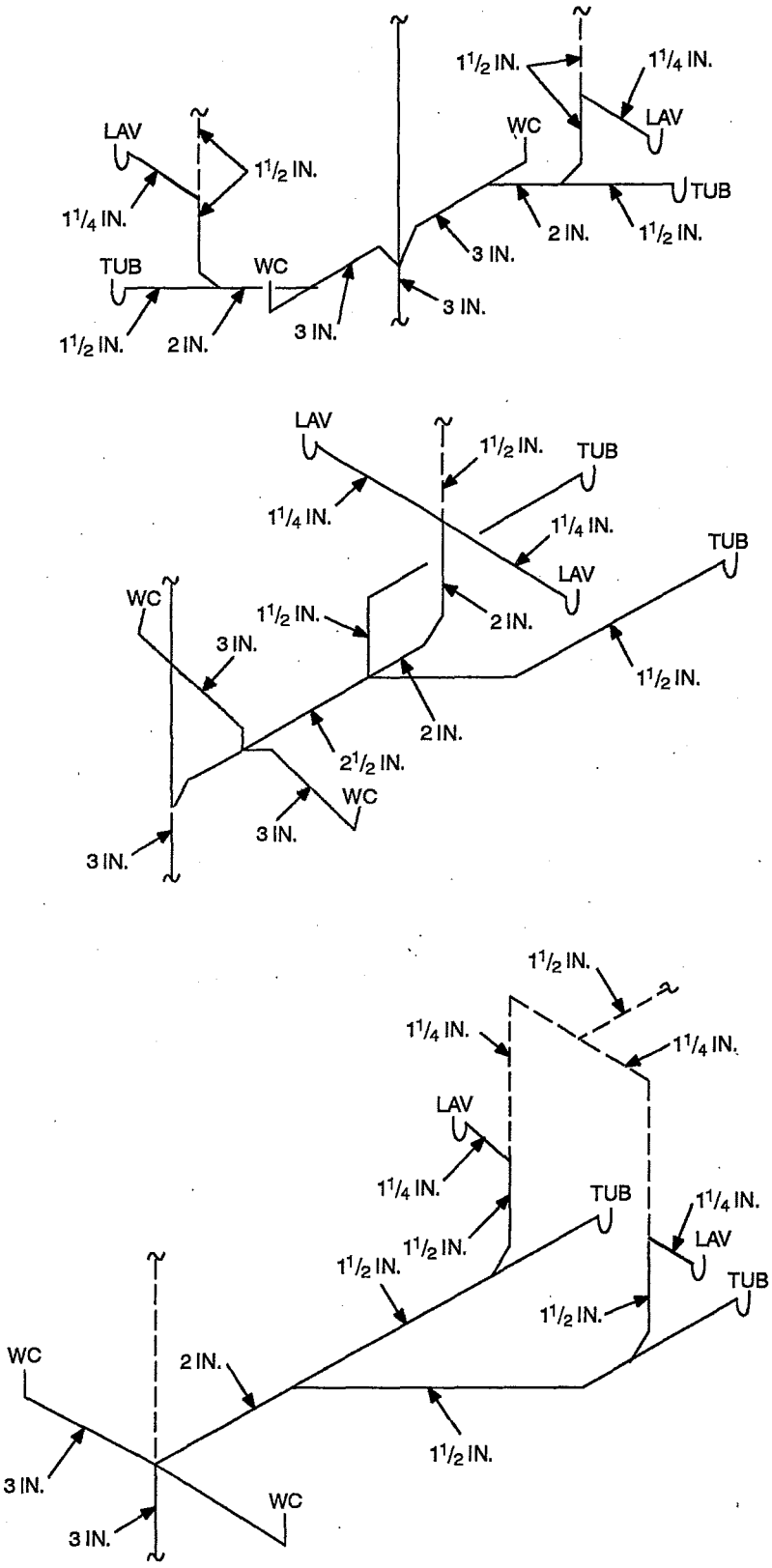

For SI: 1 inch = 25.4 mm.

FIGURE N2
TYPICAL DOUBLE-BATH WET-VENT ARRANGEMENTS

3308

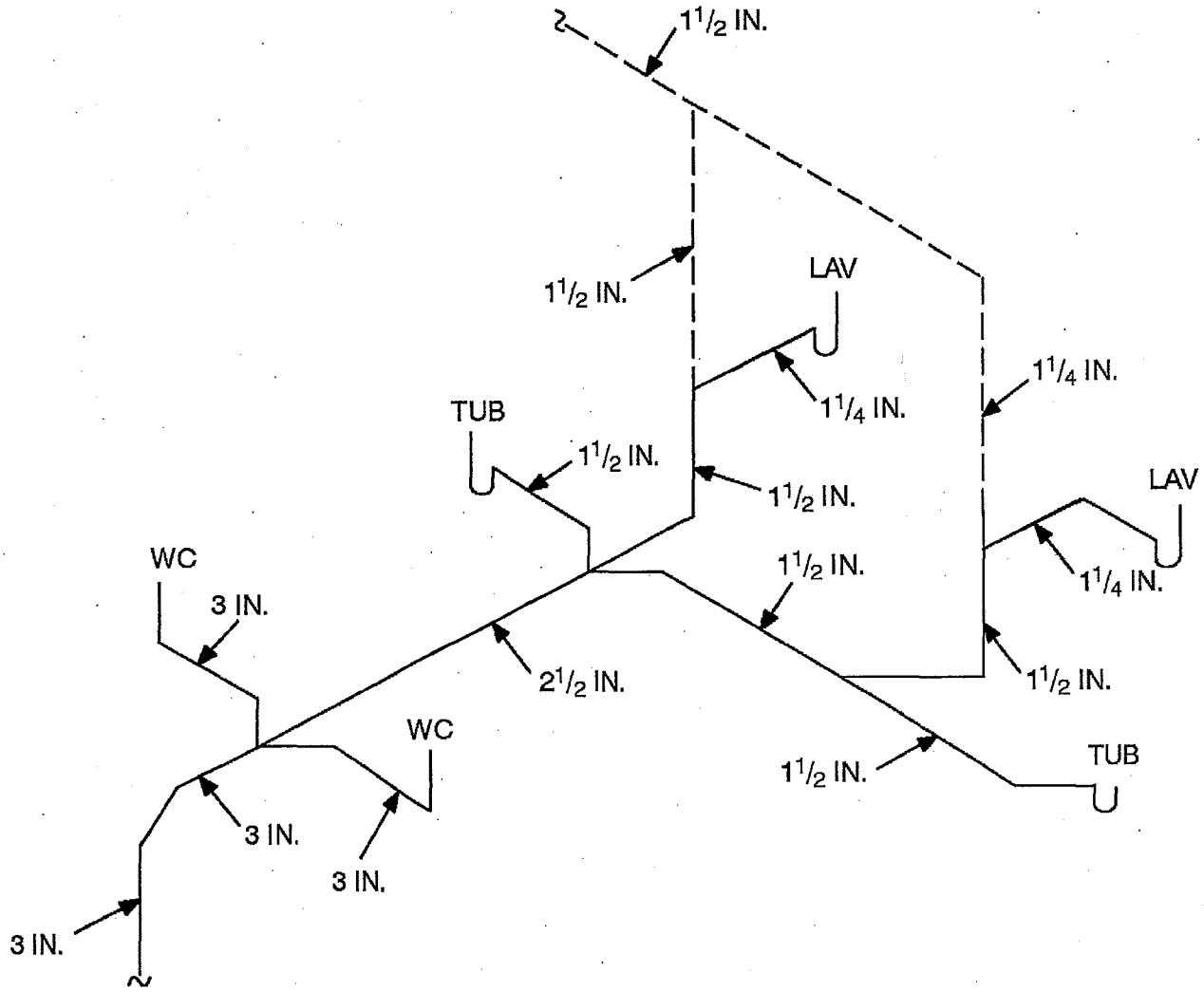

For SI: 1 inch = 25.4 mm.

FIGURE N3
TYPICAL HORIZONTAL WET VENTING

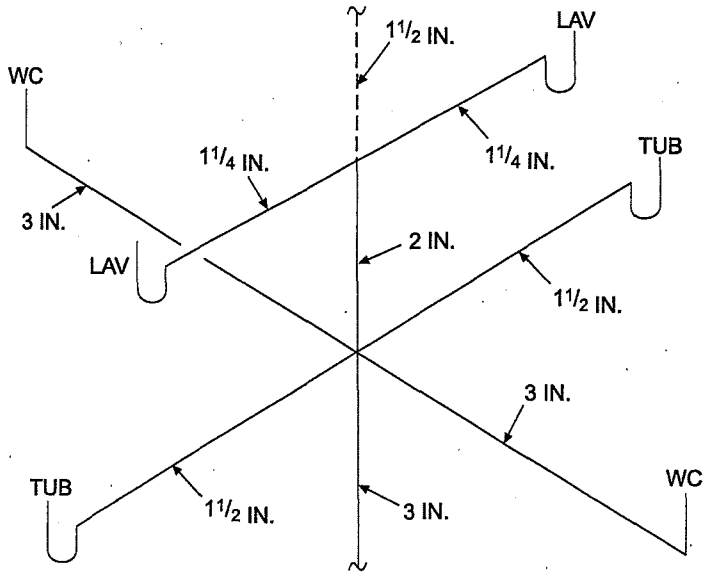

A. VERTICAL WET VENTING

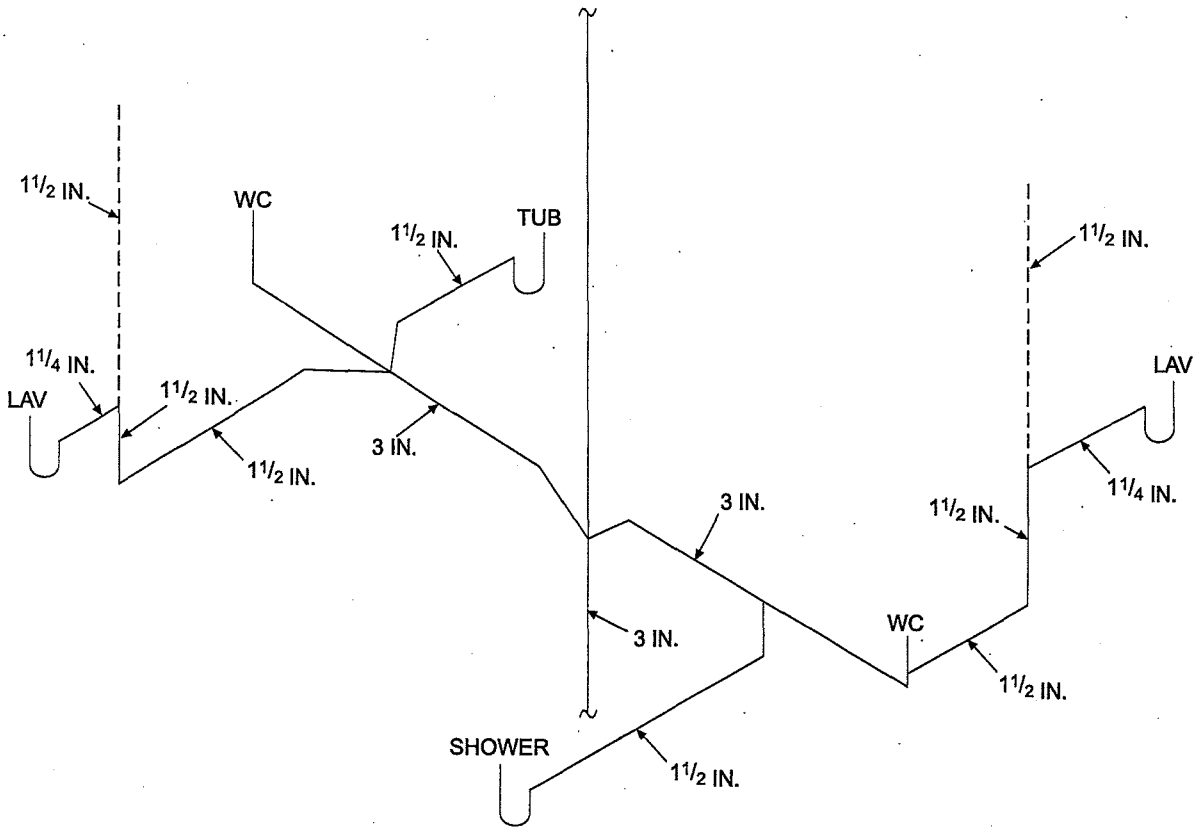

B. HORIZONTAL WET VENTING

For SI: 1 inch = 25.4 mm.

FIGURE N4
TYPICAL METHODS OF WET VENTING

3310

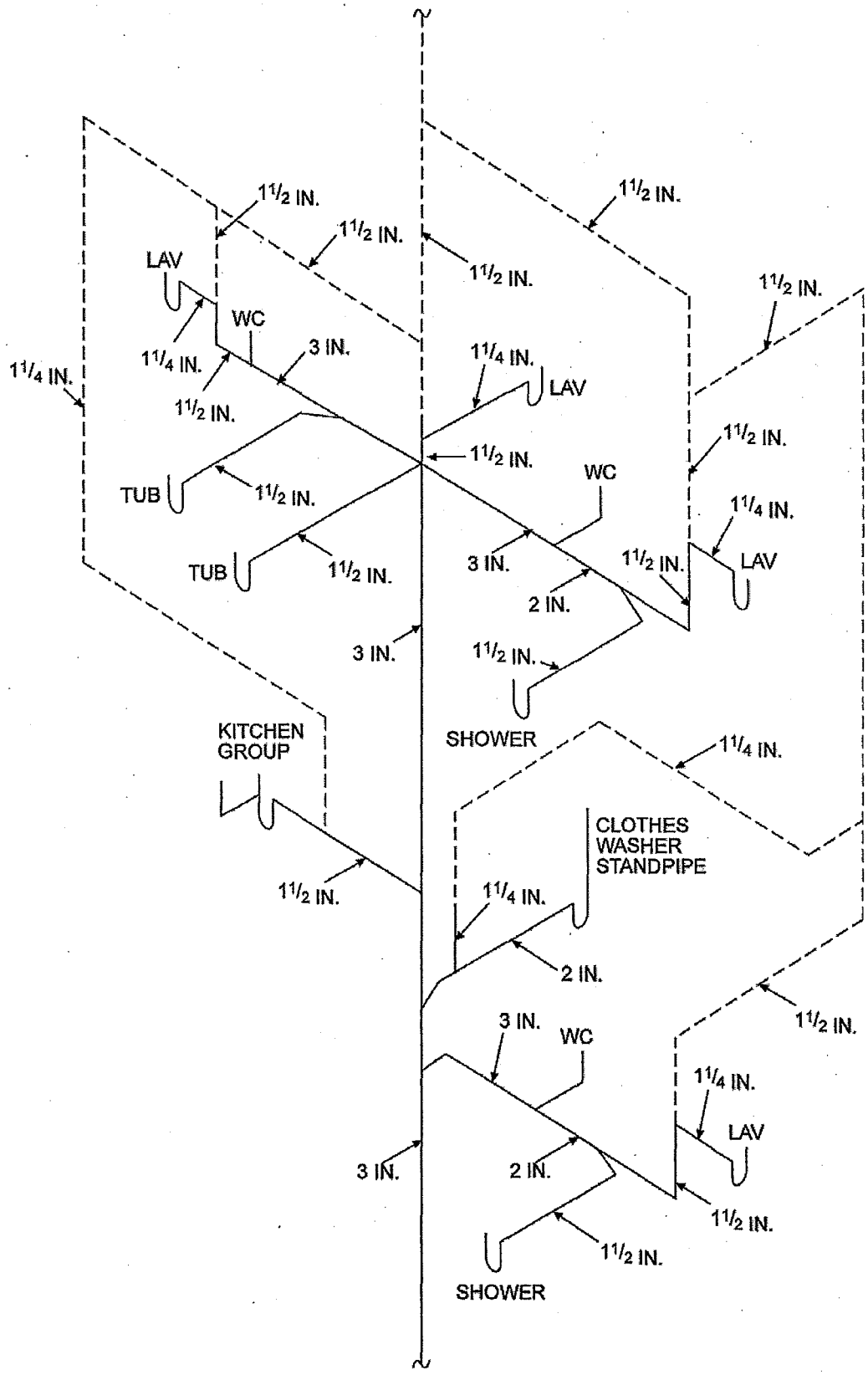

For SI: 1 inch = 25.4 mm.

FIGURE N5
SINGLE STACK SYSTEM FOR A TWO-STORY DWELLING

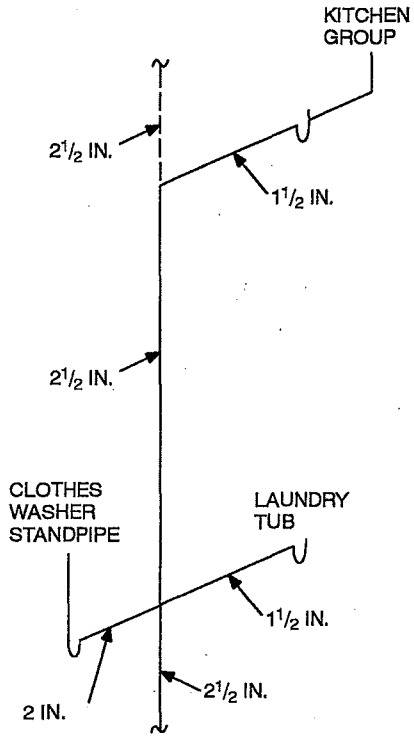

For SI: 1 inch = 25.4 mm.

FIGURE N6
WASTE STACK VENTING

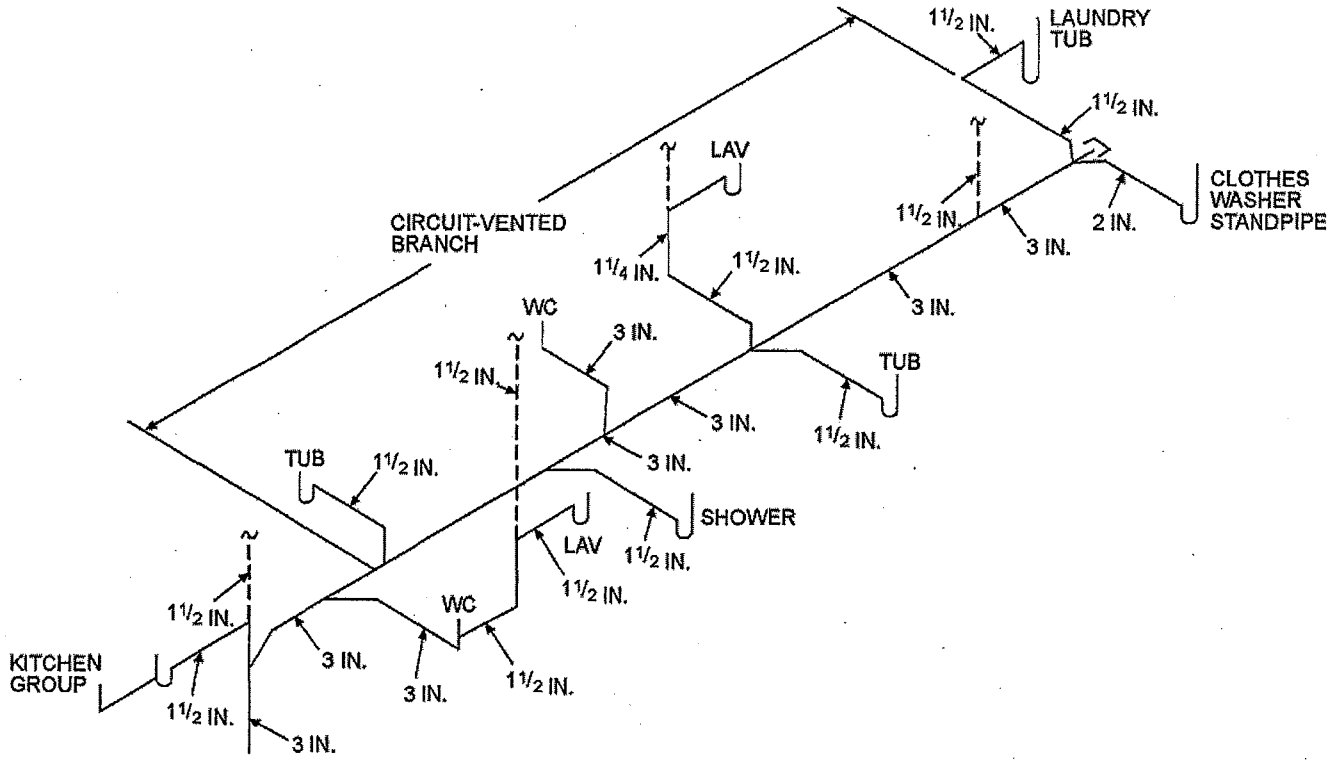

For SI: 1 inch = 25.4 mm.

FIGURE N7
CIRCUIT VENT WITH ADDITIONAL ONE CIRCUIT-VENTED BRANCH

APPENDIX O

AUTOMATIC VEHICULAR GATES

(The provisions contained in this appendix are not mandatory unless specifically referenced in the adopting ordinance.)

SECTION AO101
GENERAL

AO101.1 General. The provisions of this appendix shall control the design and construction of automatic vehicular gates installed on the lot of a one- or two-family dwelling.

SECTION AO102
DEFINITION

AO102.1 General. For the purposes of these requirements, the term used shall be defined as follows and as set forth in Chapter 2.

VEHICULAR GATE. A gate that is intended for use at a vehicular entrance or exit to the lot of a one- or two-family dwelling, and that is not intended for use by pedestrian traffic.

SECTION AO103
AUTOMATIC VEHICULAR GATES

AO103.1 Vehicular gates intended for automation. Vehicular gates intended for automation shall be designed, constructed and installed to comply with the requirements of ASTM F 2200.

AO103.2 Vehicular gate openers. Vehicular gate openers, where provided, shall be listed in accordance with UL 325.

APPENDIX P

SIZING OF WATER PIPING SYSTEM

(The provisions contained in this appendix are not mandatory unless specifically referenced in the adopting ordinance.)

SECTION AP101
GENERAL

AP101.1 Scope.

AP101.1.1 This appendix outlines two procedures for sizing a water piping system (see Sections AP103.3 and AP201.1). The design procedures are based on the minimum static pressure available from the supply source, the head changes in the system caused by friction and elevation, and the rates of flow necessary for operation of various fixtures.

AP101.1.2 Because of the variable conditions encountered in hydraulic design, it is impractical to specify definite and detailed rules for sizing of the water piping system. Accordingly, other sizing or design methods conforming to good engineering practice standards are acceptable alternatives to those presented herein.

SECTION AP102
INFORMATION REQUIRED

AP102.1 Preliminary. Obtain the necessary information regarding the minimum daily static service pressure in the area where the building is to be located. If the building supply is to be metered, obtain information regarding friction loss relative to the rate of flow for meters in the range of sizes likely to be used. Friction loss data can be obtained from most manufacturers of water meters.

AP102.2 Demand load.

AP102.2.1 Estimate the supply demand of the building main and the principal branches and risers of the system by totaling the corresponding demand from the applicable part of Table AP103.3(3).

AP102.2.2 Estimate continuous supply demands, in gallons per minute (gpm) (L/m), for lawn sprinklers, air conditioners, etc., and add the sum to the total demand for fixtures. The result is the estimated supply demand for the building supply.

SECTION AP103
SELECTION OF PIPE SIZE

AP103.1 General. Decide from Table P2903.1 what is the desirable minimum residual pressure that should be maintained at the highest fixture in the supply system. If the highest group of fixtures contains flushometer valves, the pressure for the group should be not less than 15 pounds per square inch (psi) (103.4 kPa) flowing. For flush tank supplies, the available pressure should be not less than 8 psi (55.2 kPa) flowing, except blowout action fixtures must not be less than 25 psi (172.4 kPa) flowing.

AP103.2 Pipe sizing.

AP103.2.1 Pipe sizes can be selected using the following procedure or by use of other design methods conforming to acceptable engineering practice that are *approved* by the *building official.* The sizes selected must not be less than the minimum required by this code.

AP103.2.2 Water pipe sizing procedures are based on a system of pressure requirements and losses, the sum of which must not exceed the minimum pressure available at the supply source. These pressures are as follows:

1. Pressure required at fixture to produce required flow. See Sections P2903.1 of this code and Section 604.3 of the *International Plumbing Code.*
2. Static pressure loss or gain (due to head) is computed at 0.433 psi per foot (9.8 kPa/m) of elevation change.

   Example: Assume that the highest fixture supply outlet is 20 feet (6096 mm) above or below the supply source. This produces a static pressure differential of 8.66 psi (59.8 kPa) loss [20 feet by 0.433 psi per foot (2096 mm by 9.8 kPa/m)].
3. Loss through water meter. The friction or pressure loss can be obtained from meter manufacturers.
4. Loss through taps in water main.
5. Loss through special devices, such as filters, softeners, backflow prevention devices and pressure regulators. These values must be obtained from the manufacturer.
6. Loss through valves and fittings. Losses for these items are calculated by converting to the *equivalent length* of piping and adding to the total pipe length.
7. Loss caused by pipe friction can be calculated where the pipe size, pipe length and flow through the pipe are known. With these three items, the friction loss can be determined. For piping flow charts not included, use manufacturers' tables and velocity recommendations.

Note: For all examples, the following metric conversions are applicable.

1 cubic foot per minute = 0.4719 L/s.

1 square foot = 0.0929 m^2.

1 degree = 0.0175 rad.

1 pound per square inch = 6.895 kPa.

1 inch = 25.4 mm.

1 foot = 304.8 mm.

1 gallon per minute = 3.785 L/m.

AP103.3 Segmented loss method. The size of water service mains, branch mains and risers by the segmented loss method, must be determined by knowing the water supply demand [gpm (L/m)], available water pressure [psi (kPa)] and friction loss caused by the water meter and *developed length* of pipe [feet (m)], including the *equivalent length* of fittings. This design procedure is based on the following parameters:

1. The calculated friction loss through each length of pipe.
2. A system of pressure losses, the sum of which must not exceed the minimum pressure available at the street main or other source of supply.
3. Pipe sizing based on estimated peak demand, total pressure losses caused by difference in elevation, equipment, *developed length* and pressure required at the most remote fixture; loss through taps in water main; losses through fittings, filters, backflow prevention devices, valves and pipe friction.

Because of the variable conditions encountered in hydraulic design, it is impractical to specify definite and detailed rules for the sizing of the water piping system. Current sizing methods do not address the differences in the probability of use and flow characteristics of fixtures between types of occupancies. Creating an exact model of predicting the demand for a building is impossible and final studies assessing the impact of water conservation on demand are not yet complete. The following steps are necessary for the segmented loss method.

1. **Preliminary.** Obtain the necessary information regarding the minimum daily static service pressure in the area where the building is to be located. If the building supply is to be metered, obtain information regarding friction loss relative to the rate of flow for meters in the range of sizes to be used. Friction loss data can be obtained from manufacturers of water meters. Enough pressure must be available to overcome all system losses caused by friction and elevation so that plumbing fixtures operate properly. Section 604.6 of the *International Plumbing Code* requires that the water distribution system be designed for the minimum pressure available taking into consideration pressure fluctuations. The lowest pressure must be selected to guarantee a continuous, adequate supply of water. The lowest pressure in the public main usually occurs in the summer because of lawn sprinkling and supplying water for air-conditioning cooling towers. Future demands placed on the public main as a result of large growth or expansion should be considered. The available pressure will decrease as additional loads are placed on the public system.
2. **Demand load.** Estimate the supply demand of the building main and the principal branches and risers of the system by totaling the corresponding demand from the applicable part of Table AP103.3(3). When estimating peak demand, sizing methods typically use water supply fixture units (w.s.f.u.) [see Table AP103.3(2)]. This numerical factor measures the load-producing effect of a single plumbing fixture of a given kind. The use of fixture units can be applied to a single basic probability curve (or table), found in the various sizing methods [see Table AP103.3(3)]. The fixture units are then converted into a gpm (L/m) flow rate for estimating demand.

   2.1. Estimate continuous supply demand in gpm (L/m) for lawn sprinklers, air conditioners, etc., and add the sum to the total demand for fixtures. The result is the estimated supply demand for the building supply. Fixture units cannot be applied to constant-use fixtures, such as hose bibbs, lawn sprinklers and air conditioners. These types of fixtures must be assigned the gpm (L/m) value.
3. **Selection of pipe size.** This water pipe sizing procedure is based on a system of pressure requirements and losses, the sum of which must not exceed the minimum pressure available at the supply source. These pressures are as follows:

   3.1. Pressure required at the fixture to produce required flow. See Section P2903.1 of this code and Section 604.3 of the *International Plumbing Code*.

   3.2. Static pressure loss or gain (because of head) is computed at 0.433 psi per foot (9.8 kPa/m) of elevation change.

   3.3. Loss through a water meter. The friction or pressure loss can be obtained from the manufacturer.

   3.4. Loss through taps in water main [see Table AP103.3(4)].

   3.5. Loss through special devices, such as filters, softeners, backflow prevention devices and pressure regulators. These values must be obtained from the manufacturers.

   3.6. Loss through valves and fittings [see Tables AP103.3(5) and AP103.3(6)]. Losses for these items are calculated by converting to the *equivalent length* of piping and adding to the total pipe length.

   3.7. Loss caused by pipe friction can be calculated where the pipe size, pipe length and flow through the pipe are known. With these three items, the friction loss can be determined using Figures AP103.3(2) through AP103.3(7). Where using charts, use pipe inside diameters. For piping flow charts not included, use manufacturers' tables and velocity recommendations. Before attempting to size any water supply system, it is necessary to gather preliminary information including available pressure, piping material, select design velocity, elevation differences and *developed length* to the most remote fixture. The water supply system is divided into sections at major changes in elevation or where branches lead to fixture groups. The peak demand must

3316

be determined in each part of the hot and cold water supply system. The expected flow through each section is determined in w.s.f.u. and converted to gpm (L/m) flow rate. Sizing methods require determination of the "most hydraulically remote" fixture to compute the pressure loss caused by pipe and fittings. The hydraulically remote fixture represents the most downstream fixture along the circuit of piping requiring the most available pressure to operate properly. Consideration must be given to all pressure demands and losses, such as friction caused by pipe, fittings and equipment; elevation; and the residual pressure required by Table P2903.1. The two most common and frequent complaints about water supply system operation are lack of adequate pressure and noise.

Problem: What size Type L copper water pipe, service and distribution will be required to serve a two-story factory building having on each floor, back-to-back, two toilet rooms each equipped with hot and cold water? The highest fixture is 21 feet above the street main, which is tapped with a 2-inch corporation cock at which point the minimum pressure is 55 psi. In the building *basement*, a 2-inch meter with a maximum pressure drop of 11 psi and 3-inch reduced pressure principle backflow preventer with a maximum pressure drop of 9 psi are to be installed. The system is shown in Figure AP103.3(1). To be determined are the pipe sizes for the service main, and the cold and hot water distribution pipes.

Solution: A tabular arrangement such as shown in Table AP103.3(1) should first be constructed. The steps to be followed are indicated by the tabular arrangement itself as they are in sequence, Columns 1 through 10 and Lines A through L.

Step 1

Columns 1 and 2: Divide the system into sections breaking at major changes in elevation or where branches lead to fixture groups. After Point B [see Figure AP103.3(1)], separate consideration will be given to the hot and cold water piping. Enter the sections to be considered in the service and cold water piping in Column 1 of the tabular arrangement. Column 1 of Table AP103.3(1) provides a line-by-line, recommended tabular arrangement for use in solving pipe sizing.

The objective in designing the water supply system is to ensure an adequate water supply and pressure to all fixtures and equipment. Column 2 provides the psi (kPa) to be considered separately from the minimum pressure available at the main. Losses to take into consideration are the following: the differences in elevations between the water supply source and the highest water supply outlet; meter pressure losses; the tap in main loss; special fixture devices, such as water softeners and backflow prevention devices; and the pressure required at the most remote fixture outlet.

The difference in elevation can result in an increase or decrease in available pressure at the main. Where the water supply outlet is located above the source, this results in a loss in the available pressure and is subtracted from the pressure at the water source. Where the highest water supply outlet is located below the water supply source, there will be an increase in pressure that is added to the available pressure of the water source.

Column 3: Using Table AP103.3(3), determine the gpm (L/m) of flow to be expected in each section of the system. These flows range from 28.6 to 108 gpm. Load values for fixtures must be determined as w.s.f.u. and then converted to a gpm rating to determine peak demand. Where calculating peak demands, the w.s.f.u. are added and then converted to the gpm rating. For continuous flow fixtures, such as hose bibbs and lawn sprinkler systems, add the gpm demand to the intermittent demand of fixtures. For example, a total of 120 w.s.f.u. is converted to a demand of 48 gpm. Two hose bibbs × 5 gpm demand = 10 gpm. Total gpm rating = 48.0 gpm + 10 gpm = 58.0 gpm demand.

Step 2

Line A: Enter the minimum pressure available at the main source of supply in Column 2. This is 55 psi (379.2 kPa). The local water authorities generally keep records of pressures at different times of the day and year. The available pressure can also be checked from nearby buildings or from fire department hydrant checks.

Line B: Determine from Table P2903.1 the highest pressure required for the fixtures on the system, which is 15 psi (103.4 kPa), to operate a flushometer valve. The most remote fixture outlet is necessary to compute the pressure loss caused by pipe and fittings, and represents the most downstream fixture along the circuit of piping requiring the available pressure to operate properly as indicated by Table P2903.1.

Line C: Determine the pressure loss for the meter size given or assumed. The total water flow from the main through the service as determined in Step 1 will serve to aid in the meter selected. There are three common types of water meters; the pressure losses are determined by the American Water Works Association Standards for displacement type, compound type and turbine type. The maximum pressure loss of such devices takes into consideration the meter size, safe operating capacity [gpm (L/m)] and maximum rates for continuous operations [gpm (L/m)]. Typically, equipment imparts greater pressure losses than piping.

Line D: Select from Table AP103.3(4) and enter the pressure loss for the tap size given or assumed. The loss of pressure through taps and tees in psi (kPa) is based on the total gpm (L/m) flow rate and size of the tap.

Line E: Determine the difference in elevation between the main and source of supply and the highest fixture on the system. Multiply this figure, expressed in feet (mm), by 0.43 psi. Enter the resulting psi (kPa) loss on Line E. The difference in elevation between the water supply source and the highest water supply outlet has a significant impact on the sizing of the water supply system. The difference in elevation usually results in a loss in the available pressure because the water supply outlet is generally

located above the water supply source. The loss is caused by the pressure required to lift the water to the outlet. The pressure loss is subtracted from the pressure at the water source. Where the highest water supply outlet is located below the water source, there will be an increase in pressure that is added to the available pressure of the water source.

Lines F, G and H: The pressure losses through filters, backflow prevention devices or other special fixtures must be obtained from the manufacturer or estimated and entered on these lines. Equipment, such as backflow prevention devices, check valves, water softeners, instantaneous, or tankless water heaters, filters and strainers, can impart a much greater pressure loss than the piping. The pressure losses can range from 8 to 30 psi.

Step 3

Line I: The sum of the pressure requirements and losses that affect the overall system (Lines B through H) is entered on this line. Summarizing the steps, all of the system losses are subtracted from the minimum water pressure. The remainder is the pressure available for friction, defined as the energy available to push the water through the pipes to each fixture. This force can be used as an average pressure loss, as long as the pressure available for friction is not exceeded. Saving a certain amount for available water supply pressures as an area incurs growth, or because of the aging of the pipe or equipment added to the system is recommended.

Step 4

Line J: Subtract Line I from Line A. This gives the pressure that remains available from overcoming friction losses in the system. This figure is a guide to the pipe size that is chosen for each section, incorporating the total friction losses to the most remote outlet (measured length is called *developed length*).

Exception: Where the main is above the highest fixture, the resulting psi (kPa) must be considered a pressure gain (static head gain) and omitted from the sums of Lines B through H and added to Line J.

The maximum friction head loss that can be tolerated in the system during peak demand is the difference between the static pressure at the highest and most remote outlet at no-flow conditions and the minimum flow pressure required at that outlet. If the losses are within the required limits, every run of pipe will be within the required friction head loss. Static pressure loss is at the most remote outlet in feet × 0.433 = loss in psi caused by elevation differences.

Step 5

Column 4: Enter the length of each section from the main to the most remote outlet (at Point E). Divide the water supply system into sections breaking at major changes in elevation or where branches lead to fixture groups.

Step 6

Column 5: Where selecting a trial pipe size, the length from the water service or meter to the most remote fixture outlet must be measured to determine the *developed length*. However, in systems having a flushometer valve or temperature-controlled shower at the topmost floors, the *developed length* would be from the water meter to the most remote flushometer valve on the system. A rule of thumb is that size will become progressively smaller as the system extends farther from the main source of supply. A trial pipe size can be arrived at by the following formula:

Line J: (Pressure available to overcome pipe friction) × 100/*equivalent length* of run total *developed length* to most remote fixture × percentage factor of 1.5 (Note: a percentage factor is used only as an estimate for friction losses imposed for fittings for initial trial pipe size) = psi (average pressure drop per 100 feet of pipe).

For trial pipe size, see Figure AP103.3(3) (Type L copper) based on 2.77 psi and 108 gpm = $2^1/_2$ inches. To determine the *equivalent length* of run to the most remote outlet, the *developed length* is determined and added to the friction losses for fittings and valves. The *developed lengths* of the designated pipe sections are as follows:

A-B	54 feet
B-C	8 feet
C-D	13 feet
D-E	150 feet

Total *developed length* = 225 feet

The *equivalent length* of the friction loss in fittings and valves must be added to the *developed length* (most remote outlet). Where the size of fittings and valves is not known, the added friction loss should be approximated. A general rule that has been used is to add 50 percent of the *developed length* to allow for fittings and valves. For example, the *equivalent length* of run equals the *developed length* of run (225 feet × 1.5 = 338 feet). The total *equivalent length* of run for determining a trial pipe size is 338 feet.

Example: 9.36 (pressure available to overcome pipe friction) × 100/338 (*equivalent length* of run = 225 × 1.5) = 2.77 psi (average pressure drop per 100 feet of pipe).

Step 7

Column 6: Select from Table AP103.3(6) the *equivalent lengths* for the trial pipe size of fittings and valves on each pipe section. Enter the sum for each section in Column 6. (The number of fittings to be used in this example must be an estimate). The *equivalent length* of piping is the *developed length* plus the *equivalent lengths* of pipe corresponding to the friction head losses for fittings and valves. Where the size of fittings and valves is not known, the added friction head losses must be approximated. An estimate for this example is found in Table AP.1.

Step 8

Column 7: Add the figures from Columns 4 and 6, and enter in Column 7. Express the sum in hundreds of feet.

Step 9

Column 8: Select from Figure AP103.3(3) the friction loss per 100 feet of pipe for the gpm flow in a section (Column 3) and trial pipe size (Column 5). Maximum friction head loss per 100 feet is determined on the basis of the total pressure available for friction head loss and the longest *equivalent length* of run. The selection is based on the gpm demand, uniform friction head loss and maximum design velocity. Where the size indicated by the hydraulic table indicates a velocity in excess of the selected velocity, a size must be selected that produces the required velocity.

Step 10

Column 9: Multiply the figures in Columns 7 and 8 for each section and enter in Column 9.

Total friction loss is determined by multiplying the friction loss per 100 feet for each pipe section in the total *developed length* by the pressure loss in fittings expressed as *equivalent length* in feet (mm). Note: Section C-F should be considered in the total pipe friction losses only if greater loss occurs in Section C-F than in pipe Section D-E. Section C-F is not considered in the total *developed length*. Total friction loss in *equivalent length* is determined in Table AP.2.

Step 11

Line K: Enter the sum of the values in Column 9. The value is the total friction loss in *equivalent length* for each designated pipe section.

Step 12

Line L: Subtract Line J from Line K and enter in Column 10.

The result should always be a positive or plus figure. If it is not, repeat the operation using Columns 5, 6, 8 and 9 until a balance or near balance is obtained. If the difference between Lines J and K is a high positive number, it is an indication that the pipe sizes are too large and should be reduced, thus saving materials. In such a case, the operations using Columns 5, 6, 8 and 9 should be repeated.

The total friction losses are determined and subtracted from the pressure available to overcome pipe friction for the trial pipe size. This number is critical because it provides a guide to whether the pipe size selected is too large and the process should be repeated to obtain an economically designed system.

Answer: The final figures entered in Column 5 become the design pipe size for the respective sections. Repeating this operation a second time using the same sketch but considering the demand for hot water, it is possible to size the hot water distribution piping. This has been worked up as a part of the overall problem in the tabular arrangement used for sizing the service and water distribution piping. Note that consideration must be given to the pressure losses from the street main to the water heater (Section A-B) in determining the hot water pipe sizes.

TABLE AP.1

COLD WATER PIPE SECTION	FITTINGS/VALVES	PRESSURE LOSS EXPRESSED AS EQUIVALENT LENGTH OF TUBE (feet)	HOT WATER PIPE SECTION	FITTINGS/VALVES	PRESSURE LOSS EXPRESSED AS EQUIVALENT OF TUBE (feet)
A-B	3 – $2^1/_2$″ Gate valves	3	A-B	3 – $2^1/_2$″ Gate valves	3
	1 – $2^1/_2$″ Side branch tee	12	—	1 – $2^1/_2$″ Side branch tee	12
B-C	1 – $2^1/_2$″ Straight run tee	0.5	B-C	1 – 2″ Straight run tee	7
	—	—	—	1 – 2″ 90-degree ell	0.5
C-F	1 – $2^1/_2$″ Side branch tee	12	C-F	1 – $1^1/_2$″ Side branch tee	7
C-D	1 – $2^1/_2$″ 90-degree ell	7	C-D	1 – $^1/_2$″ 90-degree ell	4
D-E	1 – $2^1/_2$″ Side branch tee	12	D-E	1 – $1^1/_2$″ Side branch tee	7

For SI: 1 inch = 25.4 mm, 1 foot = 304.8 mm, 1 degree = 0.01745 rad.

TABLE AP.2

PIPE SECTIONS	FRICTION LOSS EQUIVALENT LENGTH (feet)	
	Cold Water	Hot Water
A-B	0.69 × 3.2 = 2.21	0.69 × 3.2 = 2.21
B-C	0.085 × 3.1 = 0.26	0.16 × 1.4 = 0.22
C-D	0.20 × 1.9 = 0.38	0.17 × 3.2 = 0.54
D-E	1.62 × 1.9 = 3.08	1.57 × 3.2 = 5.02
Total pipe friction losses (Line K)	5.93	7.99

For SI: 1 foot = 304.8 mm.

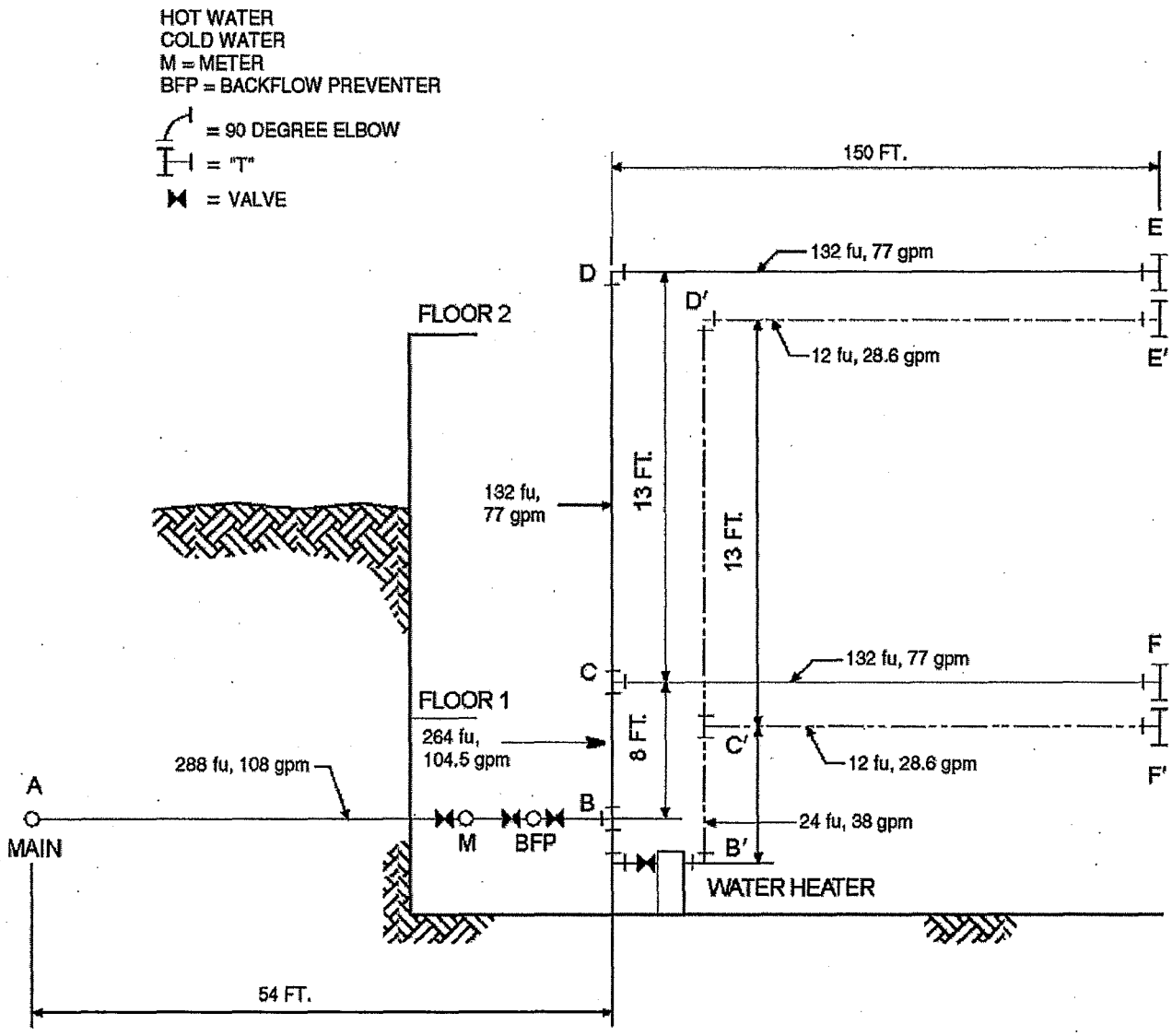

For SI: 1 foot = 304.8 mm, 1 gallon per minute = 3.785 L/m.

FIGURE AP103.3(1)
EXAMPLE—SIZING

TABLE AP103.3(1)
RECOMMENDED TABULAR ARRANGEMENT FOR USE IN SOLVING PIPE SIZING PROBLEMS

COLUMN	1		2	3	4	5	6	7	8	9	10
Line	Description		Pounds per square inch	Gallons per min through section	Length of section (feet)	Trial pipe size (inches)	Equivalent length of fittings and valves (feet)	Total equivalent length [(Col. 4 + Col. 6)/100 feet)]	Friction loss per 100 feet of trial size pipe (psi)	Friction loss in equivalent length Column 8 x Column 7 (psi)	Excess pressure over friction losses (psi)
A	Service and cold water distribution piping[a]	Minimum pressure available at main	55.00								
B		Highest pressure required at a fixture (see Table P2903.1)	15.00								
C		Meter loss 2″ meter	11.00								
D		Tap in main loss 2″ tap [see Table AP103.3(4)]	1.61								
E		Static head loss 21 ft × 0.43 psi/ft	9.03								
F		Special fixture loss backflow preventer	9.00								
G		Special fixture loss—Filter	0.00								
H		Special fixture loss—Other	0.00								
I		Total overall losses and requirements (Sum of Lines B through H)	45.64								
J		Pressure available to overcome pipe friction (Line A minus Line I)	9.36								
	Pipe section (from diagram) cold water distribution piping	A-B	288	108.0	54	$2^1/_2$	15.00	0.69	3.2	2.21	—
		B-C	264	104.5	8	$2^1/_2$	0.5	0.085	3.1	0.26	—
		C-D	132	77.0	13	$2^1/_2$	7.00	0.20	1.9	0.38	—
		C-F[b]	132	77.0	150	$2^1/_2$	12.00	1.62	1.9	3.08	—
		D-E[b]	132	77.0	150	$2^1/_2$	12.00	1.62	1.9	3.08	—
K	Total pipe friction losses (cold)			—	—	—	—	—	—	5.93	—
L	Difference (Line J minus Line K)			—	—	—	—	—	—	—	3.43
	Pipe section (from diagram) Hot water Distribution Piping	A′B′	288	108.0	54	$2^1/_2$	12.00	0.69	3.3	2.21	—
		B′C′	24	38.0	8	2	7.5	0.16	1.4	0.22	—
		C′D′	12	28.6	13	$1^1/_2$	4.0	0.17	3.2	0.54	—
		C′F′[b]	12	28.6	150	$1^1/_2$	7.00	1.57	3.2	5.02	—
		D′E′[b]	12	28.6	150	$1^1/_2$	7.00	1.57	3.2	5.02	—
K	Total pipe friction losses (hot)			—	—	—	—	—	—	7.99	—
L	Difference (Line J minus Line K)			—	—	—	—	—	—	—	1.37

For SI: 1 inch = 25.4 mm, 1 foot = 304.8 mm, 1 pound per square inch = 6.895 kPa, 1 gallon per minute = 3.785 L/m.

a. To be considered as pressure gain for fixtures below main (to consider separately, omit from "I" and add to "J").

b. To consider separately, in Line K use Section C-F only if greater loss than the loss in Section D-E.

TABLE AP103.3(2)
LOAD VALUES ASSIGNED TO FIXTURES[a]

FIXTURE	OCCUPANCY	TYPE OF SUPPLY CONTROL	LOAD VALUES, IN WATER SUPPLY FIXTURE UNITS (w.s.f.u.)		
			Cold	Hot	Total
Bathroom group	Private	Flush tank	2.7	1.5	3.6
Bathroom group	Private	Flushometer valve	6.0	3.0	8.0
Bathtub	Private	Faucet	1.0	1.0	1.4
Bathtub	Public	Faucet	3.0	3.0	4.0
Bidet	Private	Faucet	1.5	1.5	2.0
Combination fixture	Private	Faucet	2.25	2.25	3.0
Dishwashing machine	Private	Automatic	—	1.4	1.4
Drinking fountain	Offices, etc.	$^3/_8$″ valve	0.25	—	0.25
Kitchen sink	Private	Faucet	1.0	1.0	1.4
Kitchen sink	Hotel, restaurant	Faucet	3.0	3.0	4.0
Laundry trays (1 to 3)	Private	Faucet	1.0	1.0	1.4
Lavatory	Private	Faucet	0.5	0.5	0.7
Lavatory	Public	Faucet	1.5	1.5	2.0
Service sink	Offices, etc.	Faucet	2.25	2.25	3.0
Shower head	Public	Mixing valve	3.0	3.0	4.0
Shower head	Private	Mixing valve	1.0	1.0	1.4
Urinal	Public	1″ flushometer valve	10.0	—	10.0
Urinal	Public	$^3/_4$″ flushometer valve	5.0	—	5.0
Urinal	Public	Flush tank	3.0	—	3.0
Washing machine (8 lb)	Private	Automatic	1.0	1.0	1.4
Washing machine (8 lb)	Public	Automatic	2.25	2.25	3.0
Washing machine (15 lb)	Public	Automatic	3.0	3.0	4.0
Water closet	Private	Flushometer valve	6.0	—	6.0
Water closet	Private	Flush tank	2.2	—	2.2
Water closet	Public	Flushometer valve	10.0	—	10.0
Water closet	Public	Flush tank	5.0	—	5.0
Water closet	Public or private	Flushometer tank	2.0	—	2.0

For SI: 1 inch = 25.4 mm, 1 pound = 0.454 kg.

a. For fixtures not listed, loads should be assumed by comparing the fixture to one listed using water in similar quantities and at similar rates. The assigned loads for fixtures with both hot and cold water supplies are given for separate hot and cold water loads, and for total load. The separate hot and cold water loads are three-fourths of the total load for the fixture in each case.

TABLE AP103.3(3)
TABLE FOR ESTIMATING DEMAND

SUPPLY SYSTEMS PREDOMINANTLY FOR FLUSH TANKS			SUPPLY SYSTEMS PREDOMINANTLY FOR FLUSHOMETERS		
Load	Demand		Load	Demand	
(w.s.f.u.)	(gpm)	(cfm)	(w.s.f.u.)	(gpm)	(cfm)
1	3.0	0.04104	—	—	—
2	5.0	0.0684	—	—	—
3	6.5	0.86892	—	—	—
4	8.0	1.06944	—	—	—
5	9.4	1.256592	5	15.0	2.0052
6	10.7	1.430376	6	17.4	2.326032
7	11.8	1.577424	7	19.8	2.646364
8	12.8	1.711104	8	22.2	2.967696
9	13.7	1.831416	9	24.6	3.288528
10	14.6	1.951728	10	27.0	3.60936
11	15.4	2.058672	11	27.8	3.716304
12	16.0	2.13888	12	28.6	3.823248
13	16.5	2.20572	13	29.4	3.930192
14	17.0	2.27256	14	30.2	4.037136
15	17.5	2.3394	15	31.0	4.14408
16	18.0	2.90624	16	31.8	4.241024
17	18.4	2.459712	17	32.6	4.357968
18	18.8	2.513184	18	33.4	4.464912
19	19.2	2.566656	19	34.2	4.571856
20	19.6	2.620128	20	35.0	4.6788
25	21.5	2.87412	25	38.0	5.07984
30	23.3	3.114744	30	42.0	5.61356
35	24.9	3.328632	35	44.0	5.88192
40	26.3	3.515784	40	46.0	6.14928
45	27.7	3.702936	45	48.0	6.41664
50	29.1	3.890088	50	50.0	6.684
60	32.0	4.27776	60	54.0	7.21872
70	35.0	4.6788	70	58.0	7.75344
80	38.0	5.07984	80	61.2	8.181216
90	41.0	5.48088	90	64.3	8.595624
100	43.5	5.81508	100	67.5	9.0234
120	48.0	6.41664	120	73.0	9.75864
140	52.5	7.0182	140	77.0	10.29336
160	57.0	7.61976	160	81.0	10.82808
180	61.0	8.15448	180	85.5	11.42964
200	65.0	8.6892	200	90.0	12.0312
225	70.0	9.3576	225	95.5	12.76644

(continued)

TABLE AP103.3(3)—continued
TABLE FOR ESTIMATING DEMAND

SUPPLY SYSTEMS PREDOMINANTLY FOR FLUSH TANKS			SUPPLY SYSTEMS PREDOMINANTLY FOR FLUSHOMETERS		
Load	Demand		Load	Demand	
(w.s.f.u.)	(gpm)	(cfm)	(w.s.f.u.)	(gpm)	(cfm)
250	75.0	10.026	250	101.0	13.50168
275	80.0	10.6944	275	104.5	13.96956
300	85.0	11.3628	300	108.0	14.43744
400	105.0	14.0364	400	127.0	16.97736
500	124.0	16.57632	500	143.0	19.11624
750	170.0	22.7256	750	177.0	23.66136
1,000	208.0	27.80544	1,000	208.0	27.80544
1,250	239.0	31.94952	1,250	239.0	31.94952
1,500	269.0	35.95992	1,500	269.0	35.95992
1,750	297.0	39.70296	1,750	297.0	39.70296
2,000	325.0	43.446	2,000	325.0	43.446
2,500	380.0	50.7984	2,500	380.0	50.7984
3,000	433.0	57.88344	3,000	433.0	57.88344
4,000	535.0	70.182	4,000	525.0	70.182
5,000	593.0	79.27224	5,000	593.0	79.27224

For SI: 1 gallon per minute = 3.785 L/m, 1 cubic foot per minute = 0.000471 m^3/s.

TABLE AP103.3(4)
LOSS OF PRESSURE THROUGH TAPS AND TEES IN POUNDS PER SQUARE INCH (psi)

GALLONS PER MINUTE	SIZE OF TAP OR TEE (inches)						
	5/8	3/4	1	1 1/4	1 1/2	2	3
10	1.35	0.64	0.18	0.08	—	—	—
20	5.38	2.54	0.77	0.31	0.14	—	—
30	12.10	5.72	1.62	0.69	0.33	0.10	—
40	—	10.20	3.07	1.23	0.58	0.18	—
50	—	15.90	4.49	1.92	0.91	0.28	—
60	—	—	6.46	2.76	1.31	0.40	—
70	—	—	8.79	3.76	1.78	0.55	0.10
80	—	—	11.50	4.90	2.32	0.72	0.13
90	—	—	14.50	6.21	2.94	0.91	0.16
100	—	—	17.94	7.67	3.63	1.12	0.21
120	—	—	25.80	11.00	5.23	1.61	0.30
140	—	—	35.20	15.00	7.12	2.20	0.41
150	—	—	—	17.20	8.16	2.52	0.47
160	—	—	—	19.60	9.30	2.92	0.54
180	—	—	—	24.80	11.80	3.62	0.68
200	—	—	—	30.70	14.50	4.48	0.84
225	—	—	—	38.80	18.40	5.60	1.06
250	—	—	—	47.90	22.70	7.00	1.31
275	—	—	—	—	27.40	7.70	1.59
300	—	—	—	—	32.60	10.10	1.88

For SI: 1 inch = 25.4 mm, 1 pound per square inch = 6.895 kPa, 1 gallon per minute = 3.785 L/m.

TABLE AP103.3(5)
ALLOWANCE IN EQUIVALENT LENGTHS OF PIPE FOR FRICTION LOSS IN VALVES AND THREADED FITTINGS (feet)

FITTING OR VALVE	PIPE SIZE (inches)							
	1/2	3/4	1	1 1/4	1 1/2	2	2 1/2	3
45-degree elbow	1.2	1.5	1.8	2.4	3.0	4.0	5.0	6.0
90-degree elbow	2.0	2.5	3.0	4.0	5.0	7.0	8.0	10.0
Tee, run	0.6	0.8	0.9	1.2	1.5	2.0	2.5	3.0
Tee, branch	3.0	4.0	5.0	6.0	7.0	10.0	12.0	15.0
Gate valve	0.4	0.5	0.6	0.8	1.0	1.3	1.6	2.0
Balancing valve	0.8	1.1	1.5	1.9	2.2	3.0	3.7	4.5
Plug-type cock	0.8	1.1	1.5	1.9	2.2	3.0	3.7	4.5
Check valve, swing	5.6	8.4	11.2	14.0	16.8	22.4	28.0	33.6
Globe valve	15.0	20.0	25.0	35.0	45.0	55.0	65.0	80.0
Angle valve	8.0	12.0	15.0	18.0	22.0	28.0	34.0	40.0

For SI: 1 inch = 25.4 mm, 1 foot = 304.8 mm, 1 degree = 0.0175 rad.

TABLE AP103.3(6)
PRESSURE LOSS IN FITTINGS AND VALVES EXPRESSED AS EQUIVALENT LENGTH OF TUBE[a] (feet)

NOMINAL OR STANDARD SIZE (inches)	FITTINGS				Coupling	VALVES			
	Standard Ell		90-degree Tee			Ball	Gate	Butterfly	Check
	90 Degree	45 Degree	Side Branch	Straight Run					
3/8	0.5	—	1.5	—	—	—	—	—	1.5
1/2	1	0.5	2	—	—	—	—	—	2
5/8	1.5	0.5	2	—	—	—	—	—	2.5
3/4	2	0.5	3	—	—	—	—	—	3
1	2.5	1	4.5	—	—	0.5	—	—	4.5
1 1/4	3	1	5.5	0.5	0.5	0.5	—	—	5.5
1 1/2	4	1.5	7	0.5	0.5	0.5	—	—	6.5
2	5.5	2	9	0.5	0.5	0.5	0.5	7.5	9
2 1/2	7	2.5	12	0.5	0.5	—	1	10	11.5
3	9	3.5	15	1	1	—	1.5	15.5	14.5
3 1/2	9	3.5	14	1	1	—	2	—	12.5
4	12.5	5	21	1	1	—	2	16	18.5
5	16	6	27	1.5	1.5	—	3	11.5	23.5
6	19	7	34	2	2	—	3.5	13.5	26.5
8	29	11	50	3	3	—	5	12.5	39

For SI: 1 inch = 25.4 mm, 1 foot = 304.8 mm, 1 degree = 0.01745 rad.

a. Allowances are for streamlined soldered fittings and recessed threaded fittings. For threaded fittings, double the allowances shown in the table. The equivalent lengths presented in the table are based on a C factor of 150 in the Hazen-Williams friction loss formula. The lengths shown are rounded to the nearest half-foot.

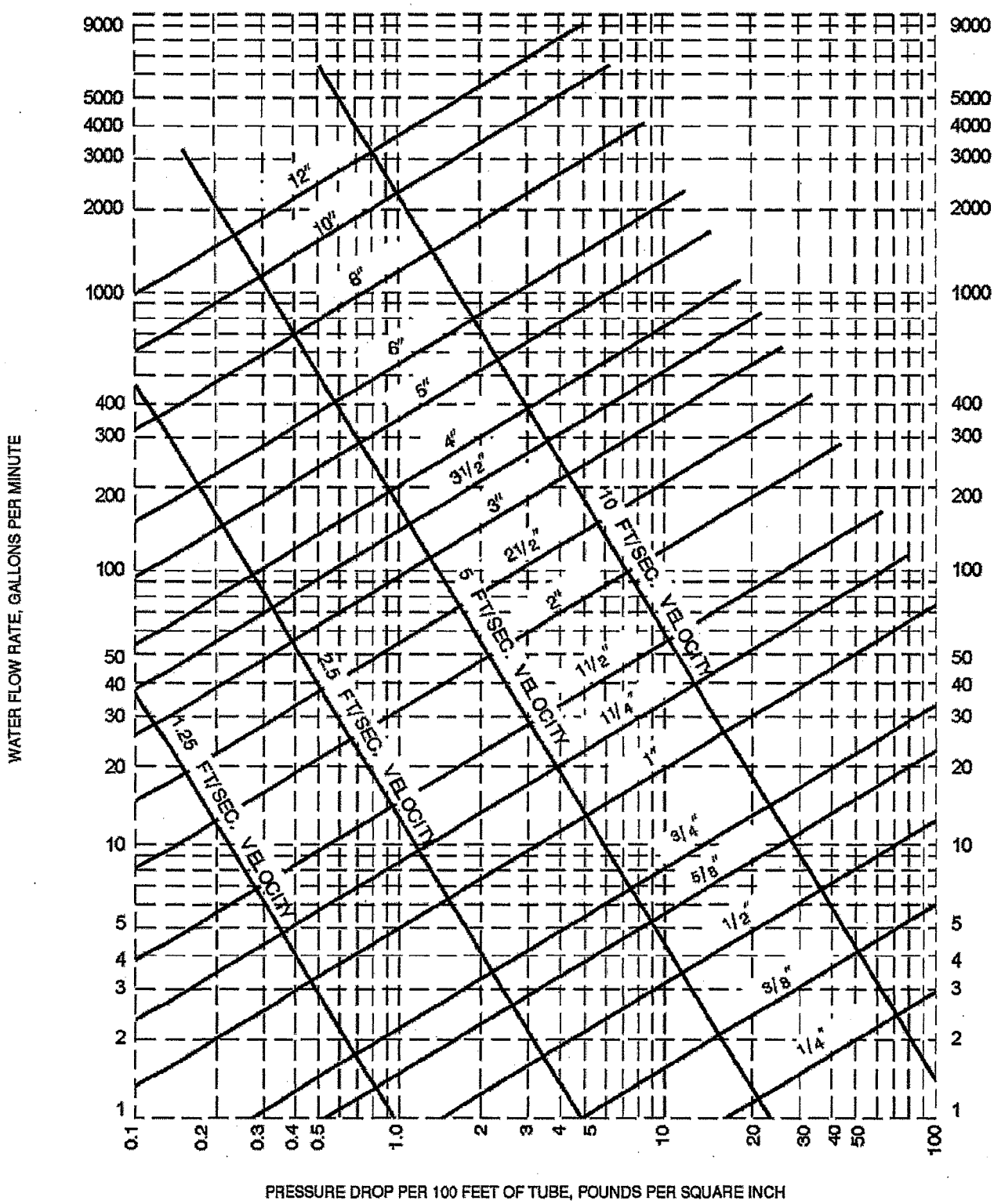

Note: Fluid velocities in excess of 5 to 8 feet per second are not usually recommended.

For SI: 1 inch = 25.4 mm, 1 foot = 304.8 mm, 1 gallon per minute = 3.785 L/m, 1 pound per square inch = 6.895 kPa, 1 foot per second = 0.305 m/s.

a. This figure applies to smooth new copper tubing with recessed (streamline) soldered joints and to the actual sizes of types indicated on the diagram.

FIGURE AP103.3(2)
FRICTION LOSS IN SMOOTH PIPE[a]
(TYPE K, ASTM B 88 COPPER TUBING)

3326

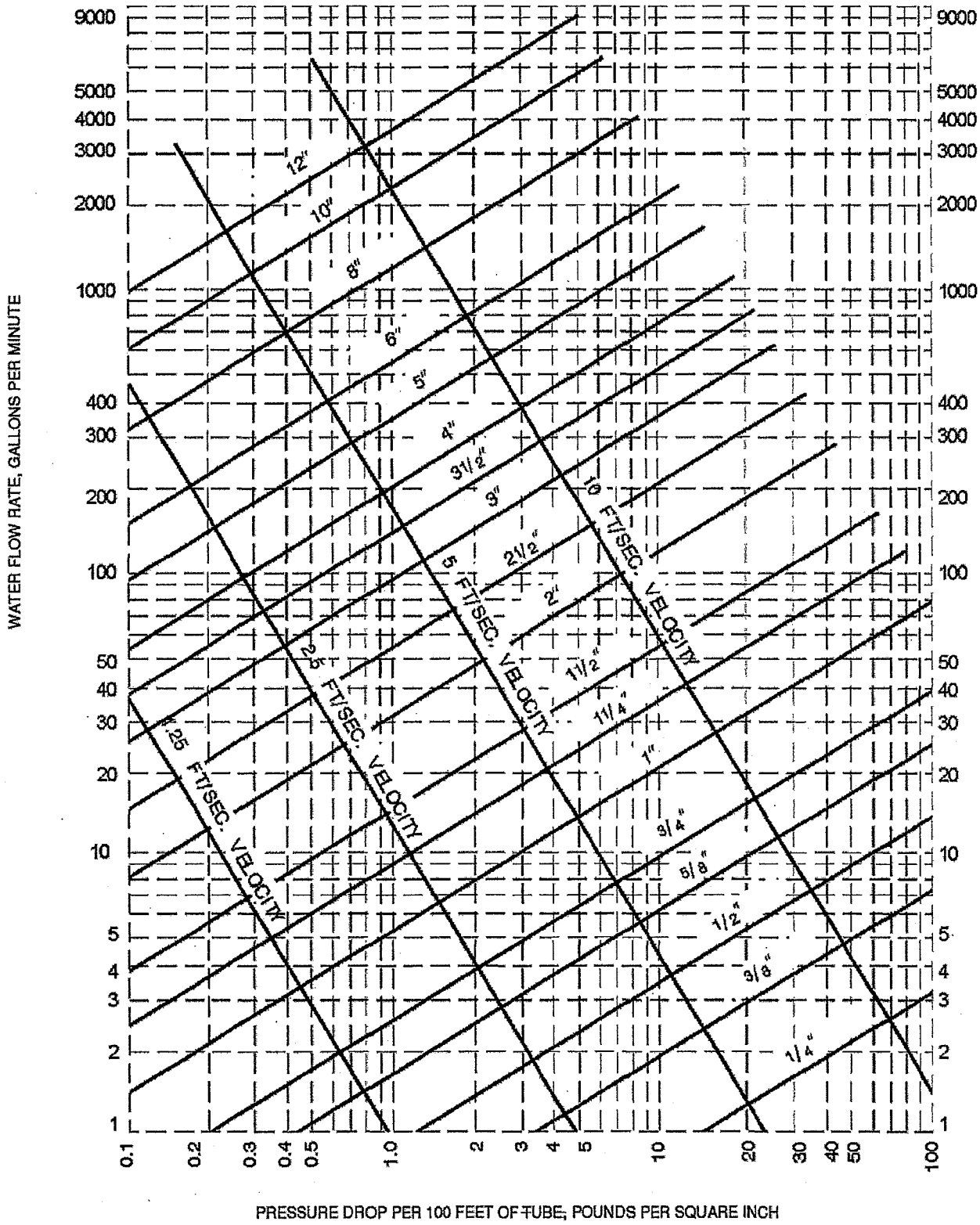

Note: Fluid velocities in excess of 5 to 8 feet per second are not usually recommended.

For SI: 1 inch = 25.4 mm, 1 foot = 304.8 mm, 1 gallon per minute = 3.785 L/m, 1 pound per square inch = 6.895 kPa, 1 foot per second = 0.305 m/s.

a. This figure applies to smooth new copper tubing with recessed (streamline) soldered joints and to the actual sizes of types indicated on the diagram.

FIGURE AP103.3(3)
FRICTION LOSS IN SMOOTH PIPE[a]
(TYPE L, ASTM B 88 COPPER TUBING)

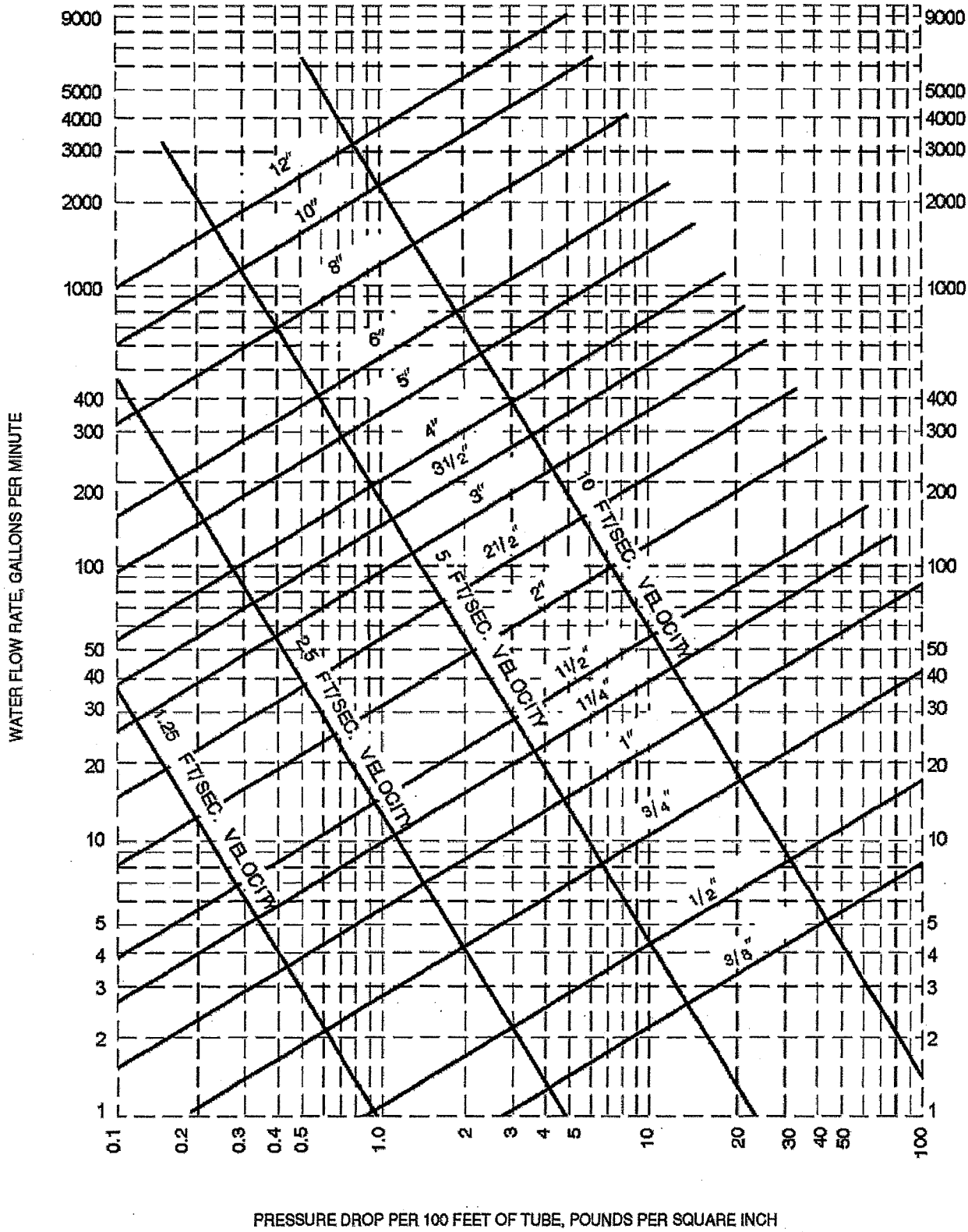

Note: Fluid velocities in excess of 5 to 8 feet per second are not usually recommended.

For SI: 1 inch = 25.4 mm, 1 foot = 304.8 mm, 1 gallon per minute = 3.785 L/m, 1 pound per square inch = 6.895 kPa, 1 foot per second = 0.305 m/s.

a. This figure applies to smooth new copper tubing with recessed (streamline) soldered joints and to the actual sizes of types indicated on the diagram.

FIGURE AP103.3(4)
FRICTION LOSS IN SMOOTH PIPE[a]
(TYPE M, ASTM B 88 COPPER TUBING)

3328

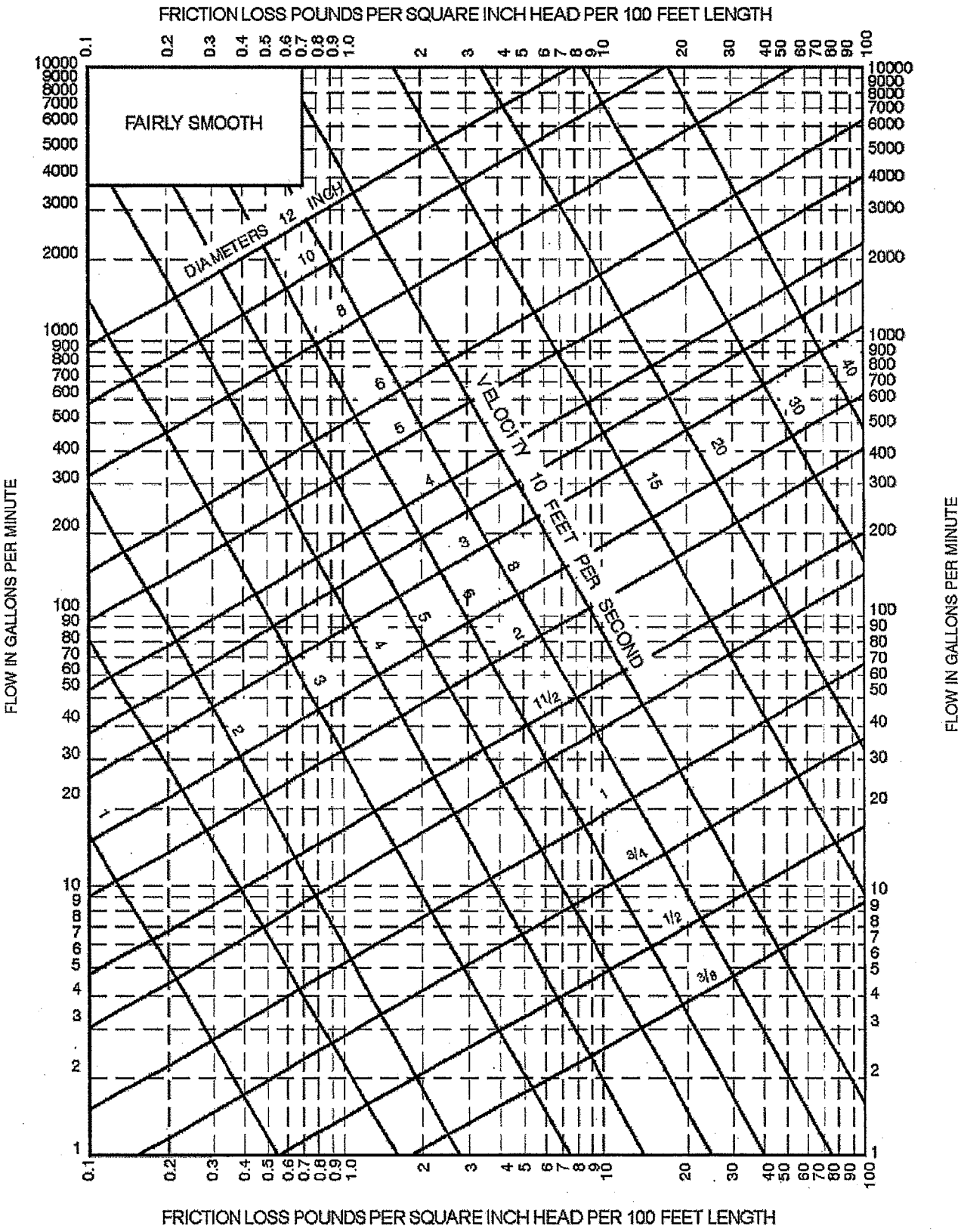

For SI: 1 inch = 25.4 mm, 1 foot = 304.8 mm, 1 gallon per minute = 3.785 L/m, 1 pound per square inch = 6.895 kPa, 1 foot per second = 0.305 m/s.

a. This figure applies to smooth new steel (fairly smooth) pipe and to actual diameters of standard-weight pipe.

FIGURE AP103.3(5)
FRICTION LOSS IN FAIRLY SMOOTH PIPE[a]

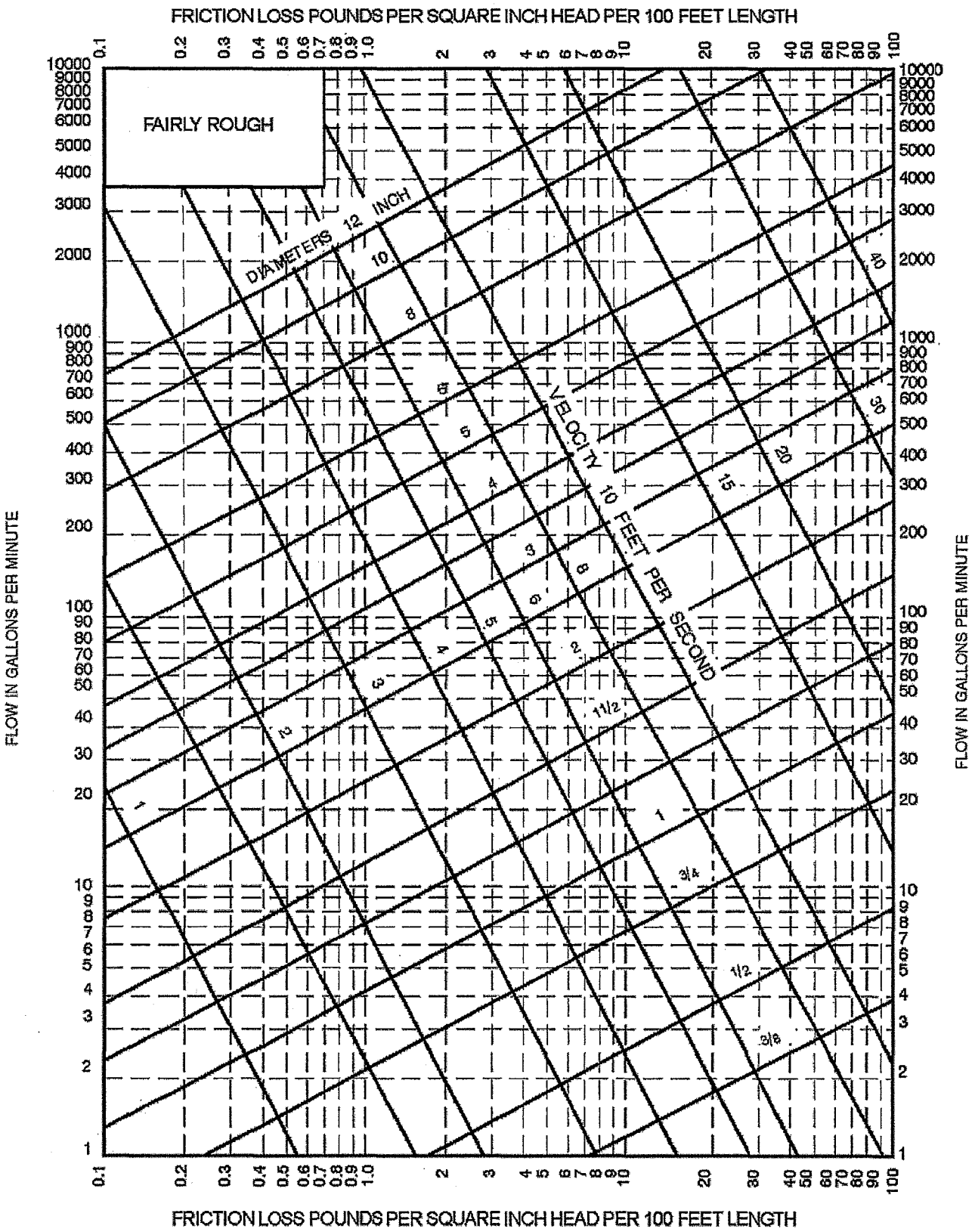

For SI: 1 inch = 25.4 mm, 1 foot = 304.8 mm, 1 gallon per minute = 3.785 L/m, 1 pound per square inch = 6.895 kPa, 1 foot per second = 0.305 m/s.

a. This figure applies to fairly rough pipe and to actual diameters which, in general, will be less than the actual diameters of the new pipe of the same kind.

FIGURE AP103.3(6)
FRICTION LOSS IN FAIRLY ROUGH PIPE[a]

3330

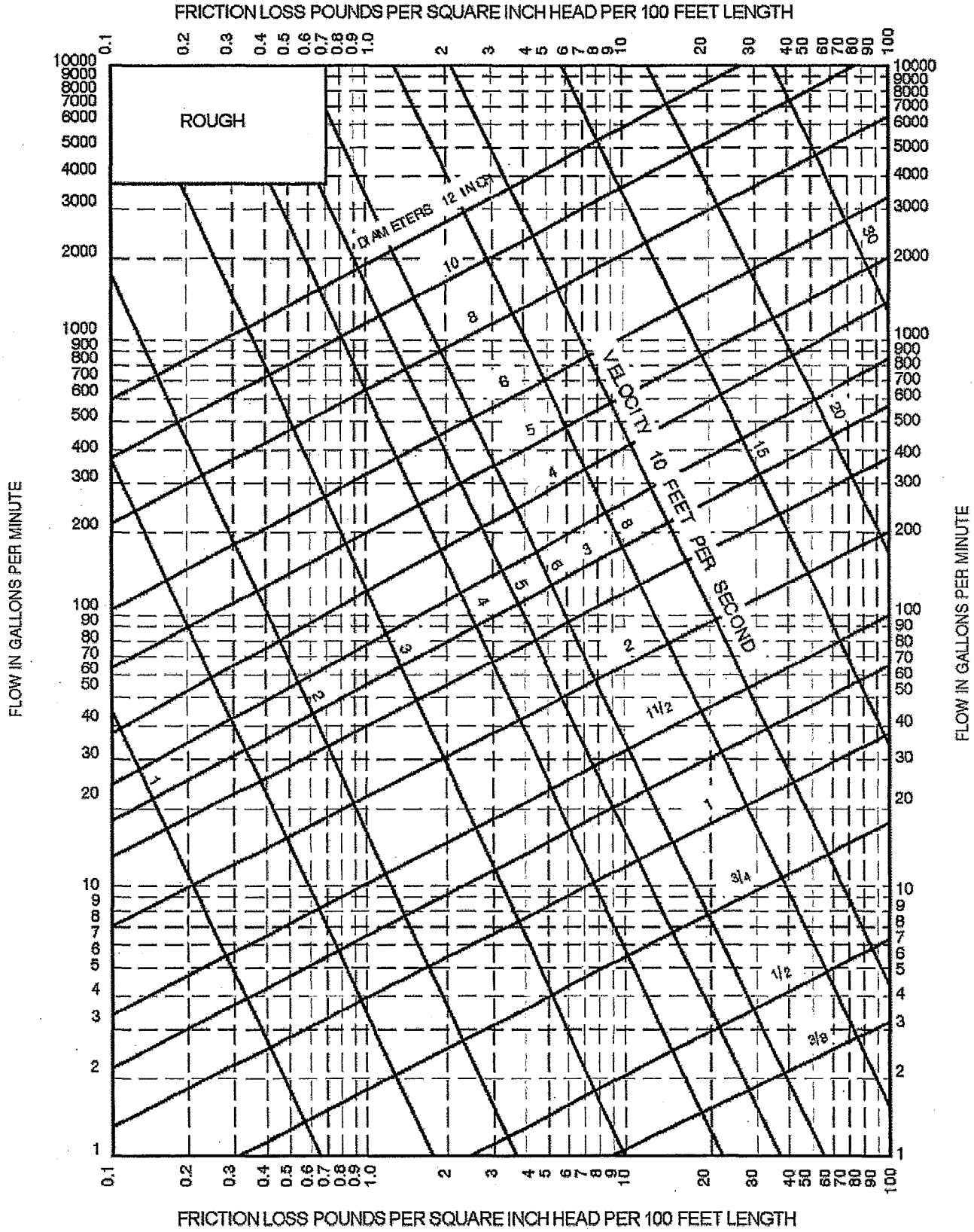

For SI: 1 inch = 25.4 mm, 1 foot = 304.8 mm, 1 gallon per minute = 3.785 L/m, 1 pound per square inch = 6.895 kPa, 1 foot per second = 0.305 m/s.

a. This figure applies to very rough pipe and existing pipe, and to their actual diameters.

FIGURE AP103.3(7)
FRICTION LOSS IN ROUGH PIPE[a]

SECTION AP201
SELECTION OF PIPE SIZE

AP201.1 Size of water-service mains, branch mains and risers. The minimum size water service pipe shall be $^3/_4$ inch (19.1 mm). The size of water service mains, branch mains and risers shall be determined according to water supply demand [gpm (L/m)], available water pressure [psi (kPa)] and friction loss caused by the water meter and *developed length* of pipe [feet (m)], including the *equivalent length* of fittings. The size of each water distribution system shall be determined according to the procedure outlined in this section or by other design methods conforming to acceptable engineering practice and *approved* by the *building official*:

1. Supply load in the building water distribution system shall be determined by the total load on the pipe being sized, in terms of w.s.f.u., as shown in Table AP103.3(2). For fixtures not listed, choose a w.s.f.u. value of a fixture with similar flow characteristics.
2. Obtain the minimum daily static service pressure [psi (kPa)] available (as determined by the local water authority) at the water meter or other source of supply at the installation location. Adjust this minimum daily static pressure [psi (kPa)] for the following conditions:
   - 2.1. Determine the difference in elevation between the source of supply and the highest water supply outlet. Where the highest water supply outlet is located above the source of supply, deduct 0.5 psi (3.4 kPa) for each foot (0.3 m) of difference in elevation. Where the highest water supply outlet is located below the source of supply, add 0.5 psi (3.4 kPa) for each foot (0.3 m) of difference in elevation.
   - 2.2. Where a water pressure-reducing valve is installed in the water distribution system, the minimum daily static water pressure available is 80 percent of the minimum daily static water pressure at the source of supply or the set pressure downstream of the water pressure-reducing valve, whichever is smaller.
   - 2.3. Deduct all pressure losses caused by special equipment, such as a backflow preventer, water filter and water softener. Pressure loss data for each piece of equipment shall be obtained through the manufacturer of the device.
   - 2.4. Deduct the pressure in excess of 8 psi (55 kPa) resulting from the installation of the special plumbing fixture, such as temperature-controlled shower and flushometer tank water closet. Using the resulting minimum available pressure, find the corresponding pressure range in Table AP201.1.
3. The maximum *developed length* for water piping is the actual length of pipe between the source of supply and the most remote fixture, including either hot (through the water heater) or cold water branches multiplied by a factor of 1.2 to compensate for pressure loss through fittings. Select the appropriate column in Table AP201.1 equal to or greater than the calculated maximum *developed length*.
4. To determine the size of the water service pipe, meter and main distribution pipe to the building using the appropriate table, follow down the selected "maximum *developed length*" column to a fixture unit equal to or greater than the total installation demand calculated by using the "combined" w.s.f.u. column of Table AP201.1. Read the water service pipe and meter sizes in the first left-hand column and the main distribution pipe to the building in the second left-hand column on the same row.
5. To determine the size of each water distribution pipe, start at the most remote outlet on each branch (either hot or cold branch) and, working back toward the main distribution pipe to the building, add up the w.s.f.u. demand passing through each segment of the distribution system using the related hot or cold column of Table AP201.1. Knowing demand, the size of each segment shall be read from the second left-hand column of the same table and the maximum *developed length* column selected in Steps 1 and 2, under the same or next smaller size meter row. In no case does the size of any branch or main need to be larger than the size of the main distribution pipe to the building established in Step 4.

TABLE AP201.1
MINIMUM SIZE OF WATER METERS, MAINS AND DISTRIBUTION PIPING BASED ON WATER SUPPLY FIXTURE UNIT VALUES (w.s.f.u.)

METER AND SERVICE PIPE (inches)	DISTRIBUTION PIPE (inches)	MAXIMUM DEVELOPMENT LENGTH (feet)									
Pressure Range 30 to 39 psi		40	60	80	100	150	200	250	300	400	500
3/4	1/2[a]	2.5	2	1.5	1.5	1	1	0.5	0.5	0	0
3/4	3/4	9.5	7.5	6	5.5	4	3.5	3	2.5	2	1.5
3/4	1	32	25	20	16.5	11	9	7.8	6.5	5.5	4.5
1	1	32	32	27	21	13.5	10	8	7	5.5	5
3/4	1 1/4	32	32	32	32	30	24	20	17	13	10.5
1	1 1/4	80	80	70	61	45	34	27	22	16	12
1 1/2	1 1/4	80	80	80	75	54	40	31	25	17.5	13
1	1 1/2	87	87	87	87	84	73	64	56	45	36
1 1/2	1 1/2	151	151	151	151	117	92	79	69	54	43
2	1 1/2	151	151	151	151	128	99	83	72	56	45
1	2	87	87	87	87	87	87	87	87	87	86
1 1/2	2	275	275	275	275	258	223	196	174	144	122
2	2	365	365	365	365	318	266	229	201	160	134
2	2 1/2	533	533	533	533	533	495	448	409	353	311

METER AND SERVICE PIPE (inches)	DISTRIBUTION PIPE (inches)	MAXIMUM DEVELOPMENT LENGTH (feet)									
Pressure Range 40 to 49 psi		40	60	80	100	150	200	250	300	400	500
3/4	1/2[a]	3	2.5	2	1.5	1.5	1	1	0.5	0.5	0.5
3/4	3/4	9.5	9.5	8.5	7	5.5	4.5	3.5	3	2.5	2
3/4	1	32	32	32	26	18	13.5	10.5	9	7.5	6
1	1	32	32	32	32	21	15	11.5	9.5	7.5	6.5
3/4	1 1/4	32	32	32	32	32	32	32	27	21	16.5
1	1 1/4	80	80	80	80	65	52	42	35	26	20
1 1/2	1 1/4	80	80	80	80	75	59	48	39	28	21
1	1 1/2	87	87	87	87	87	87	87	78	65	55
1 1/2	1 1/2	151	151	151	151	151	130	109	93	75	63
2	1 1/2	151	151	151	151	151	139	115	98	77	64
1	2	87	87	87	87	87	87	87	87	87	87
1 1/2	2	275	275	275	275	275	275	264	238	198	169
2	2	365	365	365	365	365	349	304	270	220	185
2	2 1/2	533	533	533	533	533	533	533	528	456	403

(continued)

TABLE AP201.1—continued
MINIMUM SIZE OF WATER METERS, MAINS AND DISTRIBUTION PIPING BASED ON WATER SUPPLY FIXTURE UNIT VALUES (w.s.f.u.)

METER AND SERVICE PIPE (inches)	DISTRIBUTION PIPE (inches)	MAXIMUM DEVELOPMENT LENGTH (feet)									
Pressure Range 50 to 60 psi		40	60	80	100	150	200	250	300	400	500
3/4	1/2[a]	3	3	2.5	2	1.5	1	1	1	0.5	0.5
3/4	3/4	9.5	9.5	9.5	8.5	6.5	5	4.5	4	3	2.5
3/4	1	32	32	32	32	25	18.5	14.5	12	9.5	8
1	1	32	32	32	32	30	22	16.5	13	10	8
3/4	1 1/4	32	32	32	32	32	32	32	32	29	24
1	1 1/4	80	80	80	80	80	68	57	48	35	28
1 1/2	1 1/4	80	80	80	80	80	75	63	53	39	29
1	1 1/2	87	87	87	87	87	87	87	87	82	70
1 1/2	1 1/2	151	151	151	151	151	151	139	120	94	79
2	1 1/2	151	151	151	151	151	151	146	126	97	81
1	2	87	87	87	87	87	87	87	87	87	87
1 1/2	2	275	275	275	275	275	275	275	275	247	213
2	2	365	365	365	365	365	365	365	329	272	232
2	2 1/2	533	533	533	533	533	533	533	533	533	486

METER AND SERVICE PIPE (inches)	DISTRIBUTION PIPE (inches)	MAXIMUM DEVELOPMENT LENGTH (feet)									
Pressure Range Over 60		40	60	80	100	150	200	250	300	400	500
3/4	1/2[a]	3	3	3	2.5	2	1.5	1.5	1	1	0.5
3/4	3/4	9.5	9.5	9.5	9.5	7.5	6	5	4.5	3.5	3
3/4	1	32	32	32	32	32	24	19.5	15.5	11.5	9.5
1	1	32	32	32	32	32	28	28	17	12	9.5
3/4	1 1/4	32	32	32	32	32	32	32	32	32	30
1	1 1/4	80	80	80	80	80	80	69	60	46	36
1 1/2	1 1/4	80	80	80	80	80	80	76	65	50	38
1	1 1/2	87	87	87	87	87	87	87	87	87	84
1 1/2	1 1/2	151	151	151	151	151	151	151	144	114	94
2	1 1/2	151	151	151	151	151	151	151	151	118	97
1	2	87	87	87	87	87	87	87	87	87	87
1 1/2	2	275	275	275	275	275	275	275	275	275	252
2	2	365	368	368	368	368	368	368	368	318	273
2	2 1/2	533	533	533	533	533	533	533	533	533	533

For SI: 1 inch = 25.4, 1 foot = 304.8 mm, 1 pound per square inch = 6.895 kPa.
a. Minimum size for building supply is a 3/4-inch pipe.

APPENDIX Q

RESERVED

APPENDIX R

LIGHT STRAW-CLAY CONSTRUCTION

The provisions contained in this appendix are not mandatory unless specifically referenced in the adopting ordinance.

SECTION AR101 GENERAL

AR101.1 Scope. This appendix shall govern the use of light straw-clay as a nonbearing building material and wall infill system.

SECTION AR102 DEFINITIONS

AR102.1 General. The following words and terms shall, for the purposes of this appendix, have the meanings shown herein. Refer to Chapter 2 of the *International Residential Code* for general definitions.

CLAY. Inorganic soil with particle sizes of less than 0.00008 inch (0.002 mm) having the characteristics of high to very high dry strength and medium to high plasticity.

CLAY SLIP. A suspension of clay soil in water.

CLAY SOIL. Inorganic soil containing 50 percent or more clay by volume.

INFILL. Light straw-clay that is placed between the structural members of a building.

LIGHT STRAW-CLAY. A mixture of straw and clay compacted to form insulation and plaster substrate between or around structural and nonstructural members in a wall.

NONBEARING. Not bearing the weight of the building other than the weight of the light straw-clay itself and its finish.

STRAW. The dry stems of cereal grains after the seed heads have been removed.

VOID. Any space in a light straw-clay wall in which a 2-inch (51 mm) sphere can be inserted.

SECTION AR103 NONBEARING LIGHT STRAW-CLAY CONSTRUCTION

AR103.1 General. Light straw-clay shall be limited to infill between or around structural and nonstructural wall framing members.

AR103.2 Structure. The structure of buildings using light straw-clay shall be in accordance with the *International Residential Code* or shall be in accordance with an *approved* design by a registered *design professional.*

AR103.2.1 Number of stories. Use of light straw-clay infill shall be limited to buildings that are not more than one *story above grade plane.*

Exception: Buildings using light straw-clay infill that are greater than one *story above grade plane* shall be in accordance with an approved design by a registered *design professional.*

AR103.2.2 Bracing. Wind and seismic bracing shall be in accordance with Section R602.10 and shall use Method LIB. The required length of bracing shall comply with Section R602.10.3, with the additional requirements that Table 602.10.3(3) shall be applicable to buildings in Seismic Design Category C, and that the minimum total length of bracing in Table R602.10.3(3) shall be increased by 90 percent. In lieu of these prescriptive requirements, wind and seismic bracing shall be in accordance with an *approved* design by a registered *design professional.* Walls with light straw-clay infill shall not be sheathed with solid sheathing.

AR103.2.3 Weight of light straw-clay. Light straw-clay shall be deemed to have a design dead load of 40 pounds per cubic foot (640 kg per cubic meter) unless otherwise demonstrated to the *building official.*

AR103.2.4 Reinforcement of light straw-clay. Light straw-clay shall be reinforced as follows:

1. Vertical reinforcing shall be not less than nominal 2-inch by 6-inch (51 mm by 152 mm) wood members at not more than 32 inches (813 mm) on center where the vertical reinforcing is nonload bearing and at 24 inches (610 mm) on center where it is load bearing. The vertical reinforcing shall not exceed an unrestrained height of 10 feet (3048 mm) and shall be attached at top and bottom in accordance with Chapter 6 of the this code. In lieu of these requirements, vertical reinforcing shall be in accordance with an *approved* design by a registered *design professional.*
2. Horizontal reinforcing shall be installed in the center of the wall at not more than 24 inches (610 mm) on center and shall be secured to vertical members. Horizontal reinforcing shall be of any of the following: $^3/_4$-inch (19.1 mm) bamboo, $^1/_2$-inch (12.7 mm) fiberglass rod, 1-inch (25 mm) wood dowel or nominal 1-inch by 2-inch (25 mm by 51 mm) wood.

AR103.3 Materials. The materials used in light straw-clay construction shall be in accordance with Sections AR103.3.1 through AR103.3.4.

AR103.3.1 Straw. Straw shall be wheat, rye, oats, rice or barley, and shall be free of visible decay and insects.

AR103.3.2 Clay soil. Suitability of clay soil shall be determined in accordance with the Figure 2 Ribbon Test or the Figure 3 Ball Test of the Appendix to ASTM E 2392/ E 2392M.

AR103.3.3 Clay slip. Clay slip shall be of sufficient viscosity such that a finger dipped in the slip and withdrawn remains coated with an opaque coating.

AR103.3.4 Light straw-clay mixture. Light straw-clay shall contain not less than 65 percent and not more than 85 percent straw, by volume of bale-compacted straw to clay soil. Loose straw shall be mixed and coated with clay slip such that there is not more than 5 percent uncoated straw.

AR103.4 Wall construction. Light straw-clay wall construction shall be in accordance with the requirements of Sections AR103.4.1 through AR103.4.7.

AR103.4.1 Light straw-clay maximum thickness. Light straw-clay shall be not more than 12 inches (305 mm) thick, to allow adequate drying of the installed material.

AR103.4.2 Distance above grade. Light straw-clay and its exterior finish shall be not less than 8 inches (203 mm) above exterior finished *grade*.

AR103.4.3 Moisture barrier. An *approved* moisture barrier shall separate the bottom of light straw-clay walls from any masonry or concrete foundation or slab that directly supports the walls. Penetrations and joints in the barrier shall be sealed with an *approved* sealant.

AR103.4.4 Contact with wood members. Light straw-clay shall be permitted to be in contact with untreated wood members.

AR103.4.5 Contact with nonwood structural members. Nonwood structural members in contact with light straw-clay shall be resistant to corrosion or shall be coated to prevent corrosion with an *approved* coating.

AR103.4.6 Installation. Light straw-clay shall be installed in accordance with the following:

1. Formwork shall be sufficiently strong to resist bowing where the light straw-clay is compacted into the forms.
2. Light straw-clay shall be uniformly placed into forms and evenly tamped to achieve stable walls free of voids. Light straw-clay shall be placed in lifts of not more than 6 inches (152 mm) and shall be thoroughly tamped before additional material is added.
3. Formwork shall be removed from walls within 24 hours after tamping, and walls shall remain exposed until moisture content is in accordance with Section AR103.5.1. Visible voids shall be patched with light straw-clay prior to plastering.

AR103.4.7 Openings in walls. Openings in walls shall be in accordance with the following:

1. Rough framing for doors and windows shall be fastened to structural members in accordance with the *International Residential Code*. Windows and doors shall be flashed in accordance with the *International Residential Code*.
2. An *approved* moisture barrier shall be installed at window sills in light straw-clay walls prior to installation of windows.

AR103.5 Wall finishes. The interior and exterior surfaces of light straw-clay walls shall be protected with a finish in accordance with Sections AR103.5.1 through AR103.5.5.

AR103.5.1 Moisture content of light straw-clay prior to application of finish. Light straw-clay walls shall be dry to a moisture content of not more than 20 percent at a depth of 4 inches (102 mm), as measured from each side of the wall, prior to the application of finish on either side of the wall. Moisture content shall be measured with a moisture meter equipped with a probe that is designed for use with baled straw or hay.

AR103.5.2 Plaster finish. Exterior plaster finishes shall be clay plaster or lime plaster. Interior plaster finishes shall be clay plaster, lime plaster or gypsum plaster. Plasters shall be permitted to be applied directly to the surface of the light straw-clay walls without reinforcement, except that the juncture of dissimilar substrates shall be in accordance with Section AR103.5.3. Plasters shall have a thickness of not less than $^1/_2$ inch (12.7 mm) and not more than 1 inch (25 mm) and shall be installed in not less than two coats. Exterior clay plaster shall be finished with a lime-based or silicate-mineral coating.

AR103.5.3 Separation of wood and plaster. Where wood framing occurs in light straw-clay walls, such wood surfaces shall be separated from exterior plaster with No.15 asphalt felt, Grade D paper or other approved material except where the wood is preservative treated or naturally durable.

Exception: Exterior clay plasters shall not be required to be separated from wood.

AR103.5.4 Bridging across dissimilar substrates. Bridging shall be installed across dissimilar substrates prior to the application of plaster. Acceptable bridging materials include: expanded metal lath, woven wire mesh, welded wire mesh, fiberglass mesh, reed matting or burlap. Bridging shall extend not less than 4 inches (102 mm), on both sides of the juncture.

AR103.5.5 Exterior siding. Exterior wood, metal or composite material siding shall be spaced not less than $^3/_4$ inch (19.1 mm) from the light straw-clay such that a ventilation space is created to allow for moisture diffusion. The siding shall be fastened to wood furring strips in accordance with the manufacturer's instructions. Furring strips shall be spaced not more than 32 inches (813 mm) on center, and shall be securely fastened to the vertical wall reinforcing or structural framing. Insect screening shall be provided at the top and bottom of the ventilation space. An air barrier consisting of not more than $^3/_8$-inch-thick (9.5 mm) clay plaster or lime plaster shall be applied to the light straw-clay prior to the application of siding.

SECTION AR104
THERMAL INSULATION

AR104.1 R-value. Light straw-clay, where installed in accordance with this appendix, shall be deemed to have an *R*-value of 1.6 per inch.

SECTION AR105
REFERENCED STANDARD

ASTM E 2392/
E 2392M—10 Standard Guide for Design of Earthen Wall Building Systems..... AR103.3.2

APPENDIX S

STRAWBALE CONSTRUCTION

The provisions contained in this appendix are not mandatory unless specifically referenced in the adopting ordinance.

SECTION AS101
GENERAL

AS101.1 Scope. This appendix provides prescriptive and performance-based requirements for the use of baled straw as a building material. Other methods of strawbale construction shall be subject to approval in accordance with Section 104.11 of this code. Buildings using strawbale walls shall comply with the this code except as otherwise stated in this appendix.

SECTION AS102
DEFINITIONS

AS102.1 Definitions. The following words and terms shall, for the purposes of this appendix, have the meanings shown herein. Refer to Chapter 2 of the *International Residential Code* for general definitions.

BALE. Equivalent to straw bale.

CLAY. Inorganic soil with particle sizes less than 0.00008 inch (0.002 mm) having the characteristics of high to very high dry strength and medium to high plasticity.

CLAY SLIP. A suspension of clay particles in water.

FINISH. Completed compilation of materials on the interior or exterior faces of stacked *bales*.

FLAKE. An intact section of compressed *straw* removed from an untied *bale*.

LAID FLAT. The orientation of a bale with its largest faces horizontal, its longest dimension parallel with the wall plane, its *ties* concealed in the unfinished wall and its *straw* lengths oriented across the thickness of the wall.

LOAD-BEARING WALL. A strawbale wall that supports more than 100 pounds per linear foot (1459 N/m) of vertical load in addition its own weight.

MESH. An openwork fabric of linked strands of metal, plastic, or natural or synthetic fiber, embedded in plaster.

NONSTRUCTURAL WALL. Walls other than load-bearing walls or shear walls.

ON-EDGE. The orientation of a *bale* with its largest faces vertical, its longest dimension parallel with the wall plane, its *ties* on the face of the wall and its *straw* lengths oriented vertically.

PIN. A vertical metal rod, wood dowel or bamboo, driven into the center of stacked bales, or placed on opposite surfaces of stacked bales and through-tied.

PLASTER. Gypsum or cement plaster, as defined in Sections R702 and AS104, or clay plaster, soil-cement plaster, lime plaster or cement-lime plaster as defined in Section AS104.

PRECOMPRESSION. Vertical compression of stacked bales before the application of finish.

REINFORCED PLASTER. A plaster containing mesh reinforcement.

RUNNING BOND. The placement of *straw bales* such that the head joints in successive courses are offset not less than one-quarter the bale length.

SHEAR WALL. A strawbale wall designed and constructed to resist lateral seismic and wind forces parallel to the plane of the wall in accordance with Section AS106.13.

SKIN. The compilation of plaster and reinforcing, if any, applied to the surface of stacked bales.

STRUCTURAL WALL. A wall that meets the definition for a load-bearing wall or shear wall.

STACK BOND. The placement of straw bales such that head joints in successive courses are vertically aligned.

STRAW. The dry stems of cereal grains after the seed heads have been removed.

STRAW BALE. A rectangular compressed block of straw, bound by ties.

STRAWBALE. The adjective form of straw bale.

STRAW-CLAY. Loose straw mixed and coated with clay slip.

TIE. A synthetic fiber, natural fiber or metal wire used to confine a straw bale.

TRUTH WINDOW. An area of a strawbale wall left without its finish, to allow view of the straw otherwise concealed by its finish.

SECTION AS103
BALES

AS103.1 Shape. Bales shall be rectangular in shape.

AS103.2 Size. Bales shall have a height and thickness of not less than 12 inches (305 mm), except as otherwise permitted or required in this appendix. Bales used within a continuous wall shall be of consistent height and thickness to ensure even distribution of loads within the wall system.

AS103.3 Ties. Bales shall be confined by synthetic fiber, natural fiber or metal ties sufficient to maintain required bale density. Ties shall be not less than 3 inches (76 mm) and not more than 6 inches (152 mm) from the two faces without ties and shall be spaced not more than 12 inches (305 mm) apart. Bales with broken ties shall be retied with sufficient tension to maintain required bale density.

AS103.4 Moisture content. The moisture content of bales at the time of application of the first coat of plaster or the instal-

lation of another finish shall not exceed 20 percent of the weight of the bale. The moisture content of bales shall be determined by use of a moisture meter designed for use with baled straw or hay, equipped with a probe of sufficient length to reach the center of the bale. Not less than 5 percent and not less than 10 bales used shall be randomly selected and tested.

AS103.5 Density. Bales shall have a dry density of not less than 6.5 pounds per cubic foot (104 kg/cubic meter). The dry density shall be calculated by subtracting the weight of the moisture in pounds (kg) from the actual bale weight and dividing by the volume of the bale in cubic feet (cubic meters). Not less than 2 percent and not less than five bales to be used shall be randomly selected and tested on site.

AS103.6 Partial bales. Partial bales made after original fabrication shall be retied with ties complying with Section AR103.3.

AS103.7 Types of straw. Bales shall be composed of straw from wheat, rice, rye, barley or oat.

AS103.8 Other baled material. The dry stems of other cereal grains shall be acceptable where approved by the building official.

SECTION AS104
FINISHES

AS104.1 General. Finishes applied to strawbale walls shall be any type permitted by this code, and shall comply with this section and with Chapters 3 and 7 of this code unless stated otherwise in this section.

AS104.2 Purpose, and where required. Strawbale walls shall be finished so as to provide mechanical protection, fire resistance and protection from weather and to restrict the passage of air through the bales, in accordance with this appendix and this code. Vertical strawbale wall surfaces shall receive a coat of plaster not less than $^3/_8$ inch (10 mm) thick, or greater where required elsewhere in this appendix, or shall fit tightly against a solid wall panel. The tops of strawbale walls shall receive a coat of plaster not less than $^3/_8$ inch (10 mm) thick where straw would otherwise be exposed.

Exception: Truth windows shall be permitted where a fire-resistance rating is not required. Weather-exposed truth windows shall be fitted with a weather-tight cover. Interior truth windows in Climate Zones 5, 6, 7, 8 and Marine 4 shall be fitted with an air-tight cover.

AS104.3 Vapor retarders. Class I and II vapor retarders shall not be used on a strawbale wall, nor shall any other material be used that has a vapor permeance rating of less than 3 perms, except as permitted or required elsewhere in this appendix.

AS104.4 Plaster. Plaster applied to bales shall be any type described in this section, and as required or limited in this appendix. Plaster thickness shall not exceed 2 inches (51 mm).

AS104.4.1 Plaster and membranes. Plaster shall be applied directly to strawbale walls to facilitate transpiration of moisture from the bales, and to secure a mechanical bond between the skin and the bales, except where a membrane is allowed or required elsewhere in this appendix.

AS104.4.2 Lath and mesh for plaster. The surface of the straw bales functions as lath, and other lath or mesh shall not be required, except as required for out-of-plane resistance by Table AS105.4 or for structural walls by Tables AS106.12 and AS106.13(1).

AS104.4.3 Clay plaster. Clay plaster shall comply with Sections AS104.4.3.1 through AS104.4.3.6.

AS104.4.3.1 General. Clay plaster shall be any plaster having a clay or clay-soil binder. Such plaster shall contain sufficient clay to fully bind the plaster, sand or other inert granular material, and shall be permitted to contain reinforcing fibers. Acceptable reinforcing fibers include chopped straw, sisal and animal hair.

AS104.4.3.2 Lath and mesh. Clay plaster shall not be required to contain reinforcing lath or mesh except as required in Tables AS105.4 and AS106.13(1). Where provided, mesh shall be natural fiber, corrosion-resistant metal, nylon, high-density polypropylene or other approved material.

AS104.4.3.3 Thickness and coats. Clay plaster shall be not less than 1 inch (25 mm) thick, except where required to be thicker for structural walls as described elsewhere in this appendix, and shall be applied in not less than two coats.

AS104.4.3.4 Rain-exposed. Clay plaster, where exposed to rain, shall be finished with lime wash, lime plaster, linseed oil or other *approved* erosion-resistant finish.

AS104.4.3.5 Prohibited finish coat. Plaster containing Portland cement shall not be permitted as a finish coat over clay plasters.

AS104.4.3.6 Plaster additives. Additives shall be permitted to increase plaster workability, durability, strength or water resistance.

AS104.4.4 Soil-cement plaster. Soil-cement plaster shall comply with Sections AS104.4.4.1 through AS104.4.4.3.

AS104.4.4.1 General. Soil-cement plaster shall be composed of soil (free of organic matter), sand and not less than 10 percent and not more than 20 percent Portland cement by volume, and shall be permitted to contain reinforcing fibers.

AS104.4.4.2 Lath and mesh. Soil-cement plaster shall use any corrosion-resistant lath or mesh permitted by this code, or as required in Section AS106 where used on structural walls.

AS104.4.4.3 Thickness. Soil-cement plaster shall be not less than 1 inch (25 mm) thick.

AS104.4.5 Gypsum plaster. Gypsum plaster shall comply with Section R702. Gypsum plaster shall be limited to use on interior surfaces of nonstructural walls, and as an interior finish coat over a structural plaster that complies with this appendix.

AS104.4.6 Lime plaster. Lime plaster shall comply with Sections AS104.4.6.1 and AS104.4.6.3.

AS104.4.6.1 General. Lime plaster is any plaster with a binder that is composed of calcium hydroxide (CaOH) including Type N or S hydrated lime, hydraulic lime, natural hydraulic lime or quicklime. Hydrated lime shall comply with ASTM C 206. Hydraulic lime shall comply with ASTM C 1707. Natural hydraulic lime shall comply with ASTM C 141 and EN 459. Quicklime shall comply with ASTM C 5.

AS104.4.6.2 Thickness and coats. Lime plaster shall be not less than $^7/_8$ inch (22 mm) thick, and shall be applied in not less than three coats.

AS104.4.6.3 On structural walls. Lime plaster on strawbale structural walls in accordance with Table AS106.12 or Table AS106.13(1) shall use a binder of hydraulic or natural hydraulic lime.

AS104.4.7 Cement-lime plaster. Cement-lime plaster shall be plaster mixes CL, F or FL, as described in ASTM C 926.

AS104.4.8 Cement plaster. Cement plaster shall conform to ASTM C 926 and shall comply with Sections R703.6.2, R703.6.4 and R703.6.5, except that the amount of lime in plaster coats shall be not less than 1 part lime to 6 parts cement to allow a minimum acceptable vapor permeability. The combined thickness of plaster coats shall be not more than $1^1/_2$ inches (38 mm) thick.

SECTION AS105
STRAWBALE WALLS—GENERAL

AS105.1 General. Strawbale walls shall be designed and constructed in accordance with this section. Strawbale structural walls shall be in accordance with the additional requirements of Section AS106.

AS105.2 Building requirements for use of strawbale nonstructural walls. Buildings using strawbale nonstructural walls shall be subject to the following limitations and requirements:

1. Number of stories: not more than one, except that two stories shall be allowed with an *approved* engineered design.
2. Building height: not more than 25 feet (7620 mm).
3. Wall height: in accordance with Table AS105.4.
4. Braced wall panel length, and increase in Seismic Design Categories C, D_0, D_1 and D_2: the required length of bracing for buildings using strawbale nonstructural walls shall comply with Section R602.10.3 of this code, with the additional requirements that Table 602.10.3(3) shall be applicable to buildings in Seismic Design Category C, and that the minimum total length of braced wall panels in Table R602.10.3(3) shall be increased by 60 percent.

AS105.3 Sill plates. Sill plates shall support and be flush with each face of the straw bales above and shall be of naturally durable or preservative-treated wood where required by this code. Sill plates shall be not less than nominal 2 inches by 4 inches (51 mm by 102 mm) with anchoring complying with Section R403.1.6 and the additional requirements of Tables AS105.4 and AS106.6(1), where applicable.

AS105.4 Out-of-plane resistance and unrestrained wall dimensions. Strawbale walls shall employ a method of out-of-plane resistance in accordance with Table AS105.4, and comply with its associated limits and requirements.

AS105.4.1 Determination of out-of-plane loading. Out-of-plane loading for the use of Table AS105.4 shall be in terms of the design wind speed and seismic design category as determined in accordance with Sections R301.2.1 and R301.2.2 of this code.

AS105.4.2 Pins. Pins used for out-of-plane resistance shall comply with the following or shall be in accordance with an *approved* engineered design. Pins shall be external, internal or a combination of the two.

1. Pins shall be $^1/_2$-inch-diameter (12.7 mm) steel, $^3/_4$-inch-diameter (19.1 mm) wood or $^1/_2$-inch-diameter (12.7 mm) bamboo.
2. External pins shall be installed vertically on both sides of the wall at a spacing of not more than 24 inches (610 mm) on center. External pins shall have full lateral bearing on the sill plate and the top plate or roof-bearing element, and shall be tightly tied through the wall to an opposing pin with ties spaced not more than 32 inches (813 mm) apart and not more than 8 inches (203 mm) from each end of the pins.
3. Internal pins shall be installed vertically within the center third of the bales, at spacing of not more than 24 inches (610 mm) and shall extend from top course to bottom course. The bottom course shall be similarly connected to its support and the top course shall be similarly connected to the roof- or floor-bearing member above with pins or other *approved* means. Internal pins shall be continuous or shall overlap through not less than one bale course.

AS105.5 Connection of light-framed walls to strawbale walls. *Light-framed* walls perpendicular to, or at an angle to a straw bale wall assembly, shall be fastened to the bottom and top wood members of the strawbale wall in accordance with requirements for wood or cold-formed steel *light-framed* walls in this code, or the abutting stud shall be connected to alternating straw bale courses with a $^1/_2$-inch diameter (12.7 mm) steel, $^3/_4$-inch-diameter (19.1 mm) wood or $^5/_8$-inch-diameter (15.9 mm) bamboo dowel, with not less than 8-inch (203 mm) penetration.

AS105.6 Moisture control. Strawbale walls shall be protected from moisture intrusion and damage in accordance with Sections AS105.6.1 through AS105.6.8.

AS105.6.1 Water-resistant barriers and vapor permeance ratings. Plastered bale walls shall be constructed without any membrane barrier between straw and plaster to facilitate transpiration of moisture from the bales, and to secure a structural bond between straw and plaster, except as permitted or required elsewhere in this appendix.

TABLE AS105.4
OUT-OF-PLANE RESISTANCE AND UNRESTRAINED WALL DIMENSIONS

METHOD OF OUT-OF-PLANE RESISTANCE[a]	FOR WIND DESIGN SPEEDS (mph)	FOR SEISMIC DESIGN CATEGORIES	UNRESTRAINED WALL DIMENSIONS, H[b]		MESH STAPLE SPACING AT BOUNDARY RESTRAINTS
			Absolute limit in feet	Limit based on bale thickness T[c] in feet (mm)	
Nonplaster finish or unreinforced plaster	≤ 100	A, B, C, D_0	$H \leq 8$	$H \leq 5T$	None required
Pins per Section AS105.4.2	≤ 100	A, B, C, D_0	$H \leq 12$	$H \leq 8T$	None required
Pins per Section AS105.4.2	≤ 110	A, B, C, D_0, D_1, D_2	$H \leq 10$	$H \leq 7T$	None required
Reinforced[d] clay plaster	≤ 110	A, B, C, D_0, D_1, D_2	$H \leq 10$	$H \leq 8T^{0.5}$ ($H \leq 140T^{0.5}$)	≤ 6 inches
Reinforced[d] clay plaster	≤ 110	A, B, C, D_0, D_1, D_2	$10 < H \leq 12$	$H \leq 8T^{0.5}$ ($H \leq 140T^{0.5}$)	≤ 4 inches[e]
Reinforced[d] cement, cement-lime, lime or soil-cement plaster	≤ 110	A, B, C, D_0, D_1, D_2	$H \leq 10$	$H \leq 9T^{0.5}$ ($H \leq 157T^{0.5}$)	≤ 6 inches
Reinforced[d] cement, cement-lime, lime or soil-cement plaster	≤ 120	A, B, C, D_0, D_1, D_2	$H \leq 12$	$H \leq 9T^{0.5}$ ($H \leq 157T^{0.5}$)	≤ 4 inches[e]

For SI: 1 inch = 25.4 mm, 1 foot = 304.8 mm.

a. Finishes applied to both sides of stacked bales. Where different finishes are used on opposite sides of a wall, the more restrictive requirements shall apply.

b. H = Stacked bale height in feet (mm) between sill plate and top plate or other *approved* horizontal restraint, or the horizontal distance in feet (mm) between *approved* vertical restraints. For load-bearing walls, H refers to vertical height only.

c. T = Bale thickness in feet (mm).

d. Plaster reinforcement shall be any mesh allowed in Table AS106.16 for the matching plaster type, and with staple spacing in accordance with this table. Mesh shall be installed in accordance with Section AS106.9.

e. Sill plate attachment shall be with $^5/_8$-inch anchor bolts or approved equivalent at not more than 48 inches on center where staple spacing is required to be ≤ 4 inches.

Where a water-resistant barrier is placed behind an exterior finish, it shall have a vapor permeance rating of not less than 5 perms, except as permitted or required elsewhere in this appendix.

AS105.6.2 Vapor retarders. Wall finishes shall have an equivalent vapor permeance rating of a Class III vapor retarder on the interior side of exterior strawbale walls in Climate Zones 5, 6, 7, 8 and Marine 4, as defined in Chapter 11. Bales in walls enclosing showers or steam rooms shall be protected on the interior side by a Class I or Class II vapor retarder.

AS105.6.3 Penetrations in exterior strawbale walls. Penetrations in exterior strawbale walls shall be sealed with an *approved* sealant or gasket on the exterior side of the wall in all climate zones, and on the interior side of the wall in Climate Zones 5, 6, 7, 8 and Marine 4, as defined in Chapter 11.

AS105.6.4 Horizontal surfaces. Bale walls and other bale elements shall be provided with a water-resistant barrier at weather-exposed horizontal surfaces. The water-resistant barrier shall be of a material and installation that will prevent water from entering the wall system. Horizontal surfaces shall include exterior window sills, sills at exterior niches and buttresses. The finish material at such surfaces shall be sloped not less than 1 unit vertical in 12 units horizontal (8-percent slope) and shall drain away from bale walls and elements. Where the water-resistant barrier is below the finish material, it shall be sloped not less than 1 unit vertical in 12 units horizontal (8-percent slope) and shall drain to the outside surface of the bales wall's vertical finish.

AS105.6.5 Separation of bales and concrete. A sheet or liquid-applied Class II *vapor retarder* shall be installed between bales and supporting concrete or masonry. The bales shall be separated from the vapor retarder by not less than $^3/_4$ inch (19.1 mm), and that space shall be filled with an insulating material such as wood or rigid insulation, or a material that allows vapor dispersion such as gravel, or other approved insulating or vapor dispersion material. Sill plates shall be installed at this interface in accordance with Section AS105.3. Where bales abut a concrete or masonry wall that retains earth, a Class II vapor retarder shall be provided between such wall and the bales.

AS105.6.6 Separation of bales and earth. Bales shall be separated from earth by not less than 8 inches (203 mm).

AS105.6.7 Separation of exterior plaster and earth. Exterior plaster applied to straw bales shall be located not less than 6 inches (102 mm) above earth or 3 inches (51 mm) above paved areas.

AS105.6.8 Separation of wood and plaster. Where wood framing or wood sheathing occurs on the exterior face of strawbale walls, such wood surfaces shall be separated from exterior plaster with two layers of Grade D paper, No. 15 asphalt felt or other *approved* material in accordance with Section R703.6.3.

Exceptions:

1. Where the wood is preservative treated or *naturally durable* and is not greater than $1^1/_2$ inches (38 mm) in width.

2. Clay plaster shall not be required to be separated from untreated wood that is not greater than $1^1/_2$ inches (38 mm) in width.

AS105.7 Inspections. The *building official* shall inspect the following aspects of strawbale construction in accordance with Section R109.1:

1. Sill plate anchors, as part of and in accordance with Section R109.1.1.
2. Mesh placement and attachment, where mesh is required by this appendix.
3. *Pins*, where required by and in accordance with Section AS105.4.

SECTION AS106
STRAWBALE WALLS—STRUCTURAL

AS106.1 General. Plastered strawbale walls shall be permitted to be used as structural walls in one-story buildings in accordance with the prescriptive provisions of this section.

AS106.2 Loads and other limitations. Live and dead loads and other limitations shall be in accordance with Section R301 of the *International Residential Code*. Strawbale wall dead loads shall not exceed 60 psf (2872 N/m^2) per face area of wall.

AS106.3 Foundations. Foundations for plastered strawbale walls shall be in accordance with Chapter 4.

AS106.4 Configuration of bales. Bales in strawbale structural walls shall be laid flat or on-edge and in a running bond or stack bond, except that bales in structural walls with unreinforced plasters shall be laid in a running bond only.

AS106.5 Voids and stuffing. Voids between bales in strawbale *structural walls* shall not exceed 4 inches (102 mm) in width, and such voids shall be stuffed with flakes of straw or straw-clay, before application of finish.

AS106.6 Plaster on structural walls. Plaster on *load-bearing* walls shall be in accordance with Table AS106.12. Plaster on shear walls shall be in accordance with Table AS106.13(1).

AS106.6.1 Compressive strength. For plaster on strawbale structural walls, the building official is authorized to require a 2-inch (51mm) cube test conforming to ASTM C 109 to demonstrate a minimum compressive strength in accordance with Table AS106.6.1.

AS106.7 Straightness of plaster. Plaster on strawbale structural walls shall be straight, as a function of the bale wall surfaces they are applied to, in accordance with all of the following:

1. As measured across the face of a bale, straw bulges shall not protrude more than $^3/_4$ inch (19.1 mm) across 2 feet (610 mm) of its height or length.
2. As measured across the face of a bale wall, straw bulges shall not protrude from the vertical plane of a bale wall more than 2 inches (51 mm) over 8 feet (2438 mm).
3. The vertical faces of adjacent bales shall not be offset more than $^3/_8$ inch (9.5 mm).

AS106.8 Plaster and membranes. Strawbale structural walls shall not have a membrane between straw and plaster, or shall have attachment through the bale wall from one plaster skin to the other in accordance with an *approved* engineered design.

TABLE AS106.6.1
MINIMUM COMPRESSIVE STRENGTH FOR PLASTERS ON STRUCTURAL WALLS

PLASTER TYPE	MINIMUM COMPRESSIVE STRENGTH (psi)
Clay	100
Soil-cement	1000
Lime	600
Cement-lime	1000
Cement	1400

For SI: 1 pound per square inch = 6894.76 N/m^2.

AS106.9 Mesh. Mesh in plasters on strawbale structural walls, and where required by Table AS105.4, shall be installed in accordance with Sections AS106.9.1 through AS106.9.4.

AS106.9.1 Mesh laps. Mesh required by Table AS105.4 or AS106.12 shall be installed with not less than 4-inch (102 mm) laps. Mesh required by Table AS106.13(1) or in walls designed to resist wind uplift of more than 100 plf (1459 N/m), shall run continuous vertically from sill plate to the top plate or roof-bearing element, or shall lap not less than 8 inches (203 mm). Horizontal laps in such mesh shall be not less than 4 inches (102 mm).

AS106.9.2 Mesh attachment. Mesh shall be attached with staples to top plates or roof-bearing elements and to sill plates in accordance with all of the following:

1. **Staples.** Staples shall be pneumatically driven, stainless steel or electro-galvanized, 16 gage with $1^1/_2$-inch (38 mm) legs, $^7/_{16}$-inch (11.1 mm) crown; or manually driven, galvanized, 15 gage with 1-inch (25 mm) legs. Other staples shall be permitted to be used as designed by a registered design professional. Staples into preservative-treated wood shall be stainless steel.
2. **Staple orientation.** Staples shall be firmly driven diagonally across mesh intersections at the required spacing.
3. **Staple spacing.** Staples shall be spaced not more than 4 inches (102 mm) on center, except where a lesser spacing is required by Table AS106.13(1) or Section AS106.14, as applicable.

AS106.9.3 Steel mesh. Steel mesh shall be galvanized, and shall be separated from preservative-treated wood by Grade D paper, No. 15 roofing felt or other *approved* barrier.

AS106.9.4 Mesh in plaster. Required mesh shall be embedded in the plaster except where staples fasten the mesh to horizontal boundary elements.

AS106.10 Support of plaster skins. Plaster *skins* on strawbale structural walls shall be continuously supported along their bottom edge. Acceptable supports include: a concrete or masonry stem wall, a concrete slab-on-grade, a wood-framed floor blocked with an *approved* engineered design or a steel

angle anchored with an *approved* engineered design. A weep screed as described in Section R702.8.2.1 is not an acceptable support.

AS106.11 Transfer of loads to and from plaster skins. Where plastered strawbale walls are used to support superimposed vertical loads, such loads shall be transferred to the plaster *skins* by continuous direct bearing or by an *approved* engineered design. Where plastered strawbale walls are used to resist in-plane lateral loads, such loads shall be transferred to the reinforcing mesh from the structural member or assembly above and to the sill plate in accordance with Table AS106.13(3).

AS106.12 Load-bearing walls. Plastered strawbale walls shall be permitted to be used as load-bearing walls in one-*story* buildings to support vertical loads imposed in accordance with Section R301, in accordance with and not more than the allowable bearing capacities indicated in Table AS106.12.

AS106.12.1 Precompression of load-bearing strawbale walls. Prior to application of plaster, walls designed to be load bearing shall be precompressed by a uniform load of not less than 100 plf (1459 N/m).

AS106.12.2 Concentrated loads. Concentrated loads shall be distributed by structural elements capable of distributing the loads to the bearing wall within the allowable bearing capacity listed in Table AS106.12 for the plaster type used.

AS106.13 Braced panels. Plastered strawbale walls shall be permitted to be used as braced wall panels for one-story buildings in accordance with Section R602.10 of the *International Residential Code*, and with Tables AS106.13(1), AS106.13(2) and AS106.13(3). Wind design criteria shall be in accordance with Section R301.2.1. Seismic design criteria shall be in accordance with Section R301.2.2.

TABLE AS106.12
ALLOWABLE SUPERIMPOSED VERTICAL LOADS (LBS/FOOT) FOR PLASTERED LOAD-BEARING STRAWBALE WALLS

WALL DESIGNATION	PLASTER[a] (both sides) Minimum thickness in inches each side	MESH[b]	STAPLES[c]	ALLOWABLE BEARING CAPACITY[d] (plf)
A	Clay $1^1/_2$	None required	None required	400
B	Soil-cement 1	Required	Required	800
C	Lime $^7/_8$	Required	Required	500
D	Cement-lime $^7/_8$	Required	Required	800
E	Cement $^7/_8$	Required	Required	800

For SI: 1 inch = 25.4mm, 1 pound per foot = 14.5939 N/m.

a. Plasters shall conform to Sections AS104.4.3 through AS104.4.8, AS106.7 and AS106.10.

b. Any metal mesh allowed by this appendix and installed in accordance with Section AS106.9.

c. In accordance with Section AS106.9.2, except as required to transfer roof loads to the plaster skins in accordance with Section AS106.11.

d. For walls with a different plaster on each side, the lower value shall be used.

TABLE AS106.13(1)
PLASTERED STRAWBALE BRACED WALL PANEL TYPES

WALL DESIGNATION	PLASTER[a] (both sides)		SILL PLATES[b] (nominal size in inches)	ANCHOR BOLT[c] SPACING (inches on center)	MESH[d] (inches)	STAPLE SPACING[e] (inches on center)
	Type	Thickness (minimum in inches each side)				
A1	Clay	1.5	2 × 4	32	None	None
A2	Clay	1.5	2 × 4	32	2 × 2 high-density polypropylene	2
A3	Clay	1.5	2 × 4	32	2 × 2 × 14 gage	4
B	Soil-cement	1	4 × 4	24	2 × 2 × 14 gage	2
C1	Lime	$^7/_8$	2 × 4	32	17-gage woven wire	3
C2	Lime	$^7/_8$	4 × 4	24	2 × 2 × 14 gage	2
D1	Cement-lime	$^7/_8$	4 × 4	32	17 gage woven wire	2
D2	Cement-lime	$^7/_8$	4 × 4	24	2 × 2 × 14 gage	2
E1	Cement	$^7/_8$	4 × 4	32	2 × 2 × 14 gage	2
E2	Cement	1.5	4 × 4	24	2 × 2 × 14 gage	2

SI: 1 inch = 25.4 mm

a. Plasters shall conform with Sections AS104.4.3 through AS104.4.8, AS106.7, AS106.8 and AS106.12.

b. Sill plates shall be Douglas fir-larch or southern pine and shall be *preservative treated* where required by the *International Residential Code*.

c. Anchor bolts shall be in accordance with Section AS106.13.3 at the spacing shown in this table.

d. Installed in accordance with Section AS106.9.

e. Staples shall be in accordance with Section AS106.9.2 at the spacing shown in this table.

AS106.13.1 Bale wall thickness. The thickness of the stacked bale wall without its plaster shall be not less than 15 inches (381 mm).

AS106.13.2 Sill plates. Sill plates shall be in accordance with Table AS106.13(1).

AS106.13.3 Sill plate fasteners. Sill plates shall be fastened with not less than $^5/_8$-inch-diameter (15.9 mm) steel anchor bolts with 3-inch by 3-inch by $^3/_{16}$-inch (76.2 mm by 76.2 mm by 4.8 mm) steel washers, with not less than 7-inch (177.8 mm) embedment in a concrete or masonry foundation, or shall be an approved equivalent, with the spacing shown in Table AS106.13(1). Anchor bolts or other fasteners into framed floors shall be of an approved engineered design.

AS106.14 Resistance to wind uplift forces. Plaster mesh in *skins* of strawbale walls that resist uplift forces from the roof assembly, as determined in accordance with Section R802.11, shall be in accordance with all of the following:

1. Plaster shall be any type and thickness allowed in Section AS104.
2. Mesh shall be any type allowed in Table AS106.13(1), and shall be attached to top plates or roof-bearing elements and to sill plates in accordance with Section AS106.9.2.
3. Sill plates shall be not less than nominal 2-inch by 4-inch (51 mm by 102 mm) with anchoring complying with Section R403.1.6.
4. Mesh attached with staples at 4 inches (51 mm) on center shall be considered to be capable of resisting uplift forces of 100 plf (1459 N/m) for each plaster skin.
5. Mesh attached with staples at 2 inches (51 mm) on center shall be considered to be capable of resisting uplift forces of 200 plf (2918 N/m) for each plaster skin.

TABLE AS106.13(2)
BRACING REQUIREMENTS FOR STRAWBALE BRACED WALL PANELS BASED ON WIND SPEED

• EXPOSURE CATEGORY B[d] • 25-FOOT MEAN ROOF HEIGHT • 10-FOOT EAVE-TO-RIDGE HEIGHT[d] • 10-FOOT WALL HEIGHT[d] • 2 BRACED WALL LINES[d]			MINIMUM TOTAL LENGTH (FEET) OF STRAWBALE BRACED WALL PANELS REQUIRED ALONG EACH BRACED WALL LINE[a, b, c, d]		
Basic wind speed (mph)	Story location	Braced wall line spacing (feet)	Strawbale braced wall panel[e] A2, A3	Strawbale braced wall panel[e] C1, C2, D1	Strawbale braced wall panel[e] D2, E1, E2
≤ 85	One-story building	10	6.4	3.8	3.0
		20	8.5	5.1	4.0
		30	10.2	6.1	4.8
		40	13.3	6.9	5.5
		50	16.3	7.7	6.1
		60	19.4	8.3	6.6
≤ 90	One-story building	10	6.4	3.8	3.0
		20	9.0	5.4	4.3
		30	11.2	6.4	5.1
		40	15.3	7.4	5.9
		50	18.4	8.1	6.5
		60	21.4	8.8	7.0
≤ 100	One-story building	10	7.1	4.3	3.4
		20	10.2	6.1	4.8
		30	14.3	7.2	5.7
		40	18.4	8.1	6.5
		50	22.4	9.0	7.1
		60	26.5	9.8	7.8
≤ 110	One-story building	10	7.8	4.7	3.7
		20	12.2	6.6	5.3
		30	17.3	7.9	6.3
		40	22.4	9.0	7.1
		50	26.5	9.8	7.8
		60	31.6	11.4	8.5

For SI: 1 inch = 25.4 mm, 1 foot = 305 mm, 1 mile per hour = 0.447 m/s.

a. Linear interpolation shall be permitted.

b. All *braced wall panels* shall be without openings and shall have an aspect ratio (H:L) ≤ 2:1.

c. Tabulated minimum total lengths are for *braced wall lines* using single braced wall panels with an aspect ratio (H:L) ≤ 2:1, or using multiple *braced wall panels* with *aspect ratios* (H:L) ≤ 1:1. For *braced wall lines* using two or more *braced wall panels* with an aspect ratio (H:L) > 1:1, the minimum total length shall be multiplied by the largest *aspect ratio* (H:L) of braced wall panels in that line.

d. Subject to applicable wind adjustment factors associated with "All methods" in Table R602.10.3(2)

e. Strawbale braced panel types indicated shall comply with Sections AS106.13.1 through AS106.13.3 and with Table AS106.13(1).

TABLE AS106.13(3)
BRACING REQUIREMENTS FOR STRAWBALE BRACED WALL PANELS BASED ON SEISMIC DESIGN CATEGORY

• SOIL CLASS D[d] • WALL HEIGHT = 10 FEET[d] • 15 PSF ROOF-CEILING DEAD LOAD[d] • BRACED WALL LINE SPACING ≤ 25 FEET[d]			MINIMUM TOTAL LENGTH (FEET) OF STRAWBALE BRACED WALL PANELS REQUIRED ALONG EACH BRACED WALL LINE[a, b, c, d]	
Seismic Design Category	Story location	Braced wall line length (feet)	Strawbale Braced Wall Panel[e] A2, C1, C2, D1	Strawbale Braced Wall Panel[e] B, D2, E1, E2
C	One-story building	10	5.7	4.6
		20	8.0	6.5
		30	9.8	7.9
		40	12.9	9.1
		50	16.1	10.4
D_0	One-story building	10	6.0	4.8
		20	8.5	6.8
		30	10.9	8.4
		40	14.5	9.7
		50	18.1	11.7
D_1	One-story building	10	6.3	5.1
		20	9.0	7.2
		30	12.1	8.8
		40	16.1	10.4
		50	20.1	13.0
D_2	One-story building	10	7.1	5.7
		20	10.1	8.1
		30	15.1	9.9
		40	20.1	13.0
		50	25.1	16.3

For SI: 1 inch = 25.4 mm, 1 foot = 305 mm, 1 pound per square foot = 0.0479 kPa.

a. Linear interpolation shall be permitted.

b. *Braced wall panels* shall be without openings and shall have an *aspect ratio* (H:L) ≤ 2:1.

c. Tabulated minimum total lengths are for *braced wall lines* using single *braced wall panels* with an *aspect ratio* (H:L) ≤ 2:1, or using multiple *braced wall panels* with *aspect ratios* (H:L) ≤ 1:1. For *braced wall lines* using two or more *braced wall panels* with an aspect ratio (H:L) > 1:1, the minimum total length shall be multiplied by the largest *aspect ratio* (H:L) of *braced wall panels* in that line.

d. Subject to applicable seismic adjustment factors associated with "All methods" in Table R602.10.3(4), except "Wall dead load."

e. Strawbale *braced wall panel* types indicated shall comply with Sections AS106.13.1 through AS106.13.3 and Table AS106.13(1).

SECTION AS107
FIRE RESISTANCE

AS107.1 Fire-resistance rating. Strawbale walls shall be considered to be nonrated, except for walls constructed in accordance with Section AS107.1.1 or AS107.1.2. Alternately, fire-resistance ratings of strawbale walls shall be determined in accordance with Section R302 of the *International Residential Code*.

AS107.1.1 One-hour rated clay plastered wall. One-hour fire-resistance-rated nonload-bearing clay plastered strawbale walls shall comply with all of the following:

1. Bales shall be laid flat or on-edge in a running bond.
2. Bales shall maintain thickness of not less than 18 inches (457 mm).
3. Gaps shall be stuffed with straw-clay.
4. Clay plaster on each side of the wall shall be not less than 1 inch (25 mm) thick and shall be composed of a mixture of 3 parts clay, 2 parts chopped straw and 6 parts sand, or an alternative approved clay plaster.
5. Plaster application shall be in accordance with Section AS104.4.3.3 for the number and thickness of coats.

AS107.1.2 Two-hour rated cement plastered wall. Two-hour fire-resistance-rated nonload-bearing cement plastered strawbale walls shall comply with all of the following:

1. Bales shall be laid flat or on-edge in a running bond.
2. Bales shall maintain a thickness of not less than 14 inches (356 mm).
3. Gaps shall be stuffed with straw-clay.
4. $1^1/_2$-inch (38 mm) by 17-gage galvanized woven wire mesh shall be attached to wood members with $1^1/_2$-inch (38 mm) staples at 6 inches (152 mm) on center. 9 gage U-pins with not less than 8-inch (203 mm) legs shall be installed at 18 inches (457 mm) on center to fasten the mesh to the bales.
5. Cement plaster on each side of the wall shall be not less than 1 inch (25 mm) thick.
6. Plaster application shall be in accordance with Section AS104.4.8 for the number and thickness of coats.

AS107.2 Openings in rated walls. Openings and penetrations in bale walls required to have a fire-resistance rating shall satisfy the same requirements for openings and penetrations as prescribed in the *International Residential Code*.

AS107.3 Clearance to fireplaces and chimneys. Strawbale surfaces adjacent to fireplaces or chimneys shall be finished with not less than $^3/_8$-inch (10 mm) thick plaster of any type permitted by this appendix. Clearance from the face of such plaster to fireplaces and chimneys shall be maintained as required from fireplaces and chimneys to combustibles in Chapter 10, or as required by manufacturer's instructions, whichever is more restrictive.

SECTION AS108
THERMAL INSULATION

AS108.1 R-value. The unit *R*-value of a strawbale wall with bales laid flat is R-1.3 per inch of bale thickness. The unit *R*-value of a strawbale wall with bales on-edge is R-2 per inch of bale thickness.

SECTION AS109
REFERENCED STANDARDS

ASTM

C 5—10	Standard Specification for Quicklime for Structural Purposes	AS104.4.6.1
C 109/C 109M—12	Standard Test Method for Compressive Strength of Hydraulic Cement Mortars	AS106.6.1
C 141/C 141M—09	Standard Specification for Hydrated Hydraulic Lime for Structural Purposes	AS104.4.6.1
C 206—03	Standard Specification for Finishing Hydrated Lime	AS104.4.6.1
C 926—12a	Standard Specification for Application of Portland Cement Based Plaster	AS104.4.7, AS104.4.8
C 1707—11	Standard Specification for Pozzolanic Hydraulic Lime for Structural Purposes	AS104.4.6.1

EN

459—2010	Part 1: Building Lime. Definitions, Specifications and Conformity Criteria; Part 2: Test Methods	AS104.4.6.1

APPENDIX T

RECOMMENDED PROCEDURE FOR WORST-CASE TESTING OF ATMOSPHERIC VENTING SYSTEMS UNDER N1102.4 OR N1105 CONDITIONS ≤ 5ACH$_{50}$

(This appendix is informative and is not part of the code.)

SECTION T101
SCOPE

T101.1 General. This appendix is intended to provide guidelines for worst-case testing of atmospheric venting systems. Worst-case testing is recommended to identify problems that weaken draft and restrict combustion air.

SECTION T202
GENERAL DEFINITIONS

COMBUSTION APPLIANCE ZONE (CAZ). A contiguous air volume within a building that contains a Category I or II atmospherically vented appliance or a Category III or IV direct-vent or integral vent appliance drawing combustion air from inside the building or dwelling unit. The CAZ includes, but is not limited to, a mechanical closet, a mechanical room or the main body of a house or dwelling unit.

DRAFT. The pressure difference existing between the *appliance* or any component part and the atmosphere that causes a continuous flow of air and products of *combustion* through the gas passages of the *appliance* to the atmosphere.

Mechanical or induced draft. The pressure difference created by the action of a fan, blower or ejector that is located between the *appliance* and the *chimney* or vent termination.

Natural draft. The pressure difference created by a vent or *chimney* because of its height and the temperature difference between the *flue* gases and the atmosphere.

SPILLAGE. Combustion gases emerging from an appliance or venting system into the combustion appliance zone during burner operation.

SECTION T301
TESTING PROCEDURE

T301.1 Worst-case testing of atmospheric venting systems. Buildings or dwelling units containing a Category I or II atmospherically vented appliance; or a Category III or IV direct-vent or integral vent appliance drawing combustion air from inside of the building or dwelling unit, shall have the Combustion Appliance Zone (CAZ) tested for spillage, acceptable draft and carbon monoxide (CO) in accordance with this Section. Where required by the *code official*, testing shall be conducted by an *approved* third party. A written report of the results of the test shall be signed by the party conducting the test and provided to the *code official*. Testing shall be performed at any time after creation of all penetrations of the *building thermal envelope* and prior to final inspection.

Exception: Buildings or dwelling units containing only Category III or IV direct-vent or integral vent appliances that do not draw combustion air from inside of the building or dwelling unit.

The enumerated test procedure as follows shall be complied with during testing:

1. Set combustion appliances to the pilot setting or turn off the service disconnects for combustion appliances. Close exterior doors and windows and the fireplace damper. With the building or dwelling unit in this configuration, measure and record the baseline ambient pressure inside the building or dwelling unit CAZ. Compare the baseline ambient pressure of the CAZ to that of the outside ambient pressure and record the difference (Pa).
2. Establish worst case by turning on the *clothes dryer* and all exhaust fans. Close interior doors that make the CAZ pressure more negative. Turn on the air handler, where present, and leave on if, as a result, the pressure in the CAZ becomes more negative. Check interior door positions again, closing only the interior doors that make the CAZ pressure more negative. Measure net change in pressure from the CAZ to outdoor ambient pressure, correcting for the base ambient pressure inside the home. Record "worst case depressurization" pressure and compare to Table T301.1(1).

   Where CAZ depressurization limits are exceeded under worst-case conditions in accordance with Table T301.1(1), additional combustion air shall be provided or other modifications to building air-leakage performance or exhaust appliances such that depressurization is brought within the limits prescribed in Table T301.1(1).
3. Measure worst-case spillage, acceptable draft and carbon monoxide (CO) by firing the fuel-fired appliance with the smallest Btu capacity first.
   a. Test for spillage at the draft diverter with a mirror or smoke puffer. An appliance that continues to spill flue gases for more than 60 seconds fails the spillage test.
   b. Test for CO measuring undiluted flue gases in the throat or flue of the appliance using a digital gauge in parts per million (ppm) at the 10-minute mark. Record CO ppm readings to be compared with Table

T301.1(3) upon completion of Step 4. Where the spillage test fails under worst case, go to Step 4.

c. Where spillage ends within 60 seconds, test for acceptable draft in the connector not less than 1 foot (305 mm), but not more than 2 feet (610 mm) downstream of the draft diverter. Record draft pressure and compare to Table T301.1(2).

d. Fire all other CONNECTED appliances simultaneously and test again at the draft diverter of each appliance for spillage, CO and acceptable draft using procedures 3a through 3c.

4. Measure spillage, acceptable draft, and carbon monoxide (CO) under natural conditions—without *clothes dryer* and exhaust fans on—in accordance with the procedure outlined in Step 3, measuring the net change in pressure from worst case condition in Step 3 to natural in the CAZ to confirm the worst case depressurization taken in Step 2. Repeat the process for each appliance, allowing each vent system to cool between tests.

5. Monitor indoor ambient CO in the breathing zone continuously during testing, and abort the test where indoor ambient CO exceeds 35 ppm by turning off the appliance, ventilating the space, and evacuating the building. The CO problem shall be corrected prior to completing combustion safety diagnostics.

6. Make recommendations based on test results and the retrofit action prescribed in Table T301.1(3).

TABLE T301.1(1)
CAZ DEPRESSURIZATION LIMITS

VENTING CONDITION	LIMIT (Pa)
Category I, atmospherically vented water heater	–2.0
Category I or II atmospherically vented boiler or furnace common vented with a Category I atmospherically vented water heater	–3.0
Category I or II atmospherically vented boiler or furnace, equipped with a flue damper, and common vented with a Category I atmospherically vented water heater	–5.0
Category I or II atmospherically vented boiler or furnace alone	
Category I or II atmospherically vented, fan-assisted boiler or furnace common vented with a Category I atmospherically vented water heater	
Decorative vented, gas appliance	
Power vented or induced-draft boiler or furnace alone, or fan-assisted water heater alone	–15.0
Category IV direct-vented appliances and sealed combustion appliances	–50.0

For SI: 6894.76 Pa = 1.0 psi.

TABLE T301.1(2)
ACCEPTABLE DRAFT TEST CORRECTION

OUTSIDE TEMPERATURE (°F)	MINIMUM DRAFT PRESSURE REQUIRED (Pa)
< 10	–2.5
10 – 90	(Outside Temperature ÷ 40) – 2.75
> 90	–0.5

For SI: 6894.76 Pa = 1.0 psi.

TABLE T301.1(3)
ACCEPTABLE DRAFT TEST CORRECTION

CARBON DIOXIDE LEVEL (ppm)	AND OR	SPILLAGE AND ACCEPTABLE DRAFT TEST RESULTS	RETROFIT ACTION
0 – 25	and	Passes	Proceed with work
25 < × ≤ 100	and	Passes	Recommend that CO problem be resolved
25 < × ≤ 100	and	Fails in worst case only	Recommend an appliance service call and repairs to resolve the problem
100 < × ≤ 400	or	Fails under natural conditions	**Stop!** Work shall not proceed until appliance is serviced and problem resolved
> 400	and	Passes	**Stop!** Work shall not proceed until appliance is serviced and problem resolved
> 400	and	Fails under any condition	**Emergency!** Shut off fuel to appliance and call for service immediately

APPENDIX U

SOLAR-READY PROVISIONS—DETACHED ONE- AND TWO-FAMILY DWELLINGS, MULTIPLE SINGLE-FAMILY DWELLINGS (TOWNHOUSES)

(The provisions contained in this appendix are not mandatory unless specifically referenced in the adopting ordinance.)

SECTION U101
SCOPE

U101.1 General. These provisions shall be applicable for new construction where solar-ready provisions are required.

SECTION U102
GENERAL DEFINITIONS

SOLAR-READY ZONE. A section or sections of the roof or building overhang designated and reserved for the future installation of a solar photovoltaic or solar thermal system.

SECTION U103
SOLAR-READY ZONE

U103.1 General. New detached one- and two-family dwellings, and multiple single-family dwellings (townhouses) with not less than 600 square feet (55.74 m^2) of roof area oriented between 110 degrees and 270 degrees of true north shall comply with sections U103.2 through U103.8.

Exceptions:

1. New residential buildings with a permanently installed on-site renewable energy system.
2. A building with a solar-ready zone that is shaded for more than 70 percent of daylight hours annually.

U103.2 Construction document requirements for solar ready zone. Construction documents shall indicate the solar-ready *zone*.

U103.3 Solar-ready zone area. The total solar-ready *zone* area shall be not less than 300 square feet (27.87 m^2) exclusive of mandatory access or set back areas as required by the *International Fire Code*. New multiple single-family dwellings (townhouses) three stories or less in height above grade plane and with a total floor area less than or equal to 2,000 square feet (185.8 m^2) per dwelling shall have a solar-ready *zone* area of not less than 150 square feet (13.94 m^2). The solar-ready *zone* shall be composed of areas not less than 5 feet (1.52 m) in width and not less than 80 square feet (7.44 m^2) exclusive of access or set back areas as required by the *International Fire Code*.

U103.4 Obstructions. Solar-ready *zones* shall be free from obstructions, including but not limited to vents, chimneys, and roof-mounted equipment.

U103.5 Roof load documentation. The structural design loads for roof dead load and roof live load shall be clearly indicated on the construction documents.

U103.6 Interconnection pathway. Construction documents shall indicate pathways for routing of conduit or plumbing from the solar-ready *zone* to the electrical service panel or service hot water system.

U103.7 Electrical service reserved space. The main electrical service panel shall have a reserved space to allow installation of a dual pole circuit breaker for future solar electric installation and shall be labeled "For Future Solar Electric." The reserved space shall be positioned at the opposite (load) end from the input feeder location or main circuit location.

U103.8 Construction documentation certificate. A permanent certificate, indicating the solar-ready *zone* and other requirements of this section, shall be posted near the electrical distribution panel, water heater or other conspicuous location by the builder or registered design professional.

INDEX

A

ABSORPTION COOLING EQUIPMENT M1412
ACCESS
To appliances M1305
To attic R807
To crawl space R408.4
To equipment M1401.2
To floor furnace M1408.4
To plumbing connections P2704
To plumbing fixtures P2705
To whirlpool pumps P2720.1
ACCESSIBLE
Definition R202
Readily accessible, definition R202
ACCESSORY STRUCTURE
Definition R202
ADDRESS (SITE) R319
ADMINISTRATIVE ..... Chapter 1
Authority R104
Entry R104.6
Inspections R109
Permits R105
Purpose R101.3
Violations R113
AIR
Combustion ..... Chapter 17, G2407
Combustion air, definition R202
Return M1602
AIR CONDITIONERS
Branch circuits E3702.11
Room air conditioners E3702.12
ALLOWABLE SPANS
Of floor joists R502.3, R505.3.2
Of headers R602.7, R603.6, R610.10
Of rafters and ceiling joists R802.4, R802.5, R804.3.1, R804.3.2
ALTERNATIVE MATERIALS (see MATERIALS) R104.11
AMPACITY E3501
ANCHOR BOLTS R403.1.6
APPEAL
Board of R112.1
Right of R112
APPLIANCE
Access to M1305
Attic M1305.1.3
Clearance for M1306
Connectors, fuel-gas ..... Chapter 24
Definition R202
Definition applied to electrical equipment E3501
Electrical appliance disconnection means E4101.5
Electrical appliance installation E4101
Equipment (general) ..... Chapter 14
Floor furnace M1408
Flue area R1003.14
Fuel-burning ..... Chapter 24
Heating and cooling ..... Chapter 14
Installation M1307
Labeling M1303
Open-top broiler units M1505.1
Outdoor G2454
Ranges M1901
Room heaters M1410
Special fuel-burning equipment ..... Chapter 19
Vented (decorative) ..... Chapter 24
Wall furnace M1409
Warm-air furnace M1402
Water heaters ..... Chapter 20, Chapter 24
APPLICATION
Plywood R703.3
APPROVAL
Mechanical M1302
APPROVED
Definition R202
Definition applied to electrical equipment E3501
ARC-FAULT CIRCUIT-INTERRUPTER E3902
AREA
Disposal, private sewage disposal P2602
Flue (appliances) R1003.14
Flue masonry R1003.15
ARMORED CABLE ..... Table E3801.2
ASPHALT SHINGLES R905.2
ATTACHMENT PLUG (PLUG CAP) (CAP)
Definition E3501
ATTIC
Access R807
AUTOMATIC FIRE SPRINKLER SYSTEMS ... R313

B

BACKFILL
For piping P2604
BACKFLOW, DRAINAGE
Definition R202
BACKWATER VALVE R202

BASEMENT WALL
Definition R202
BATH AND SHOWER SPACES R307
BATHROOM
Exhaust M1507.4
Group. . . . . R202, Table P3004.1
BATHTUB
Enclosure. P2713.2
Hydromassage. E4209
Outlets for P2713.1
Whirlpool P2720
BEAM SUPPORTS. R606.14
BEARING
Of joists R502.6
BIDETS. P2721
BOILER
Definition R202
Requirements . . . . . Chapter 20
BONDING. E3609, E4204
Definition applied to
electrical installations E3501
BONDING JUMPER. E3501
Bonding of service equipment E3609.2
Bonding to other systems E3609.3
Main bonding jumper. E3607.5
Metal water piping bonding E3608.1.1
Sizing bonding jumpers E3609.5
BORED HOLES (see NOTCHING)
BOXES E3906
Nonmetallic boxes E3905.3
Support of boxes E3904.3
Where required E3905.1
BRANCH CIRCUIT. . . . . E3501, Chapter 37
Branch circuit ampacity E3701.2
Branch circuit ratings E3702
Branch circuits required. E3703
BUILDING
Definition R202
Drain, definition R202
Existing, definition R202
Sewer, definition R202
BUILDING OFFICIAL
Definition R202
Inspection and tests of
fuel-gas piping . . . . . Chapter 24
BUILDING PLANNING
Automatic fire sprinkler systems R313
Carbon monoxide alarms. R315
Ceiling height. R305
Decay protection R317
Design criteria R301
Emergency escape R310
Exterior wall R302.1
Fire-resistant construction R302
Foam plastic. R316
Garages and carports R309
Glazing. R308
Guardrails. R312
Handrails R311.7.8, R311.8.3
Insulation R302.10
Landing R311.3, R311.3.1, R311.3.2, R311.5.1
Light, ventilation and heating R303
Means of egress. R311
Minimum room area R304
Planning. . . . . Chapter 3
Plumbing fixture clearances. R307
Radon protection . . . . . Appendix F
Ramps R311.8
Sanitation. R306
Site address. R319
Smoke alarms R314
Stairways R311.7
Storm shelters R323
Termite protection R318
BUILDING THERMAL ENVELOPE
Definition R202
BUILT-UP GIRDERS (see GIRDERS)
BUILT-UP ROOFING (see ROOFING)

C

CABINETS AND PANELBOARDS E3907
CAPACITY
Expansion tank. M2003.2
CARBON MONOXIDE ALARMS R315
CARPORT. R309.4
CEILING
Finishes R805
Height. R305
CEILING FANS. E4203.4
CENTRAL FURNACES (see FURNACES)
CHASES R606.8
CHIMNEYS
And fireplaces . . . . . Chapter 10
Caps. R1003.9.1
Clearance. R1003.18
Corbeling R1003.5
Crickets R1003.20
Design (masonry). R1003.1
Factory-built R1005
Fireblocking R1003.19
Flue area R1003.14, R1003.15

Flue lining R100311
Load R1003.8
Masonry and factory built, size M1805
Multiple flue R1003.14
Rain caps 1003.9.3
Spark arrestors R1003.9.2
Termination R1003.9
Wall thickness R1003.10

CIRCUIT BREAKER
Definition E3501

CLASS 2 CIRCUITS
Class 2 remote-control, signaling and power-limited circuits . . . . . Chapter 43

CLAY
Tiles R905.3

CLEANOUT
Definition R202
Drainage P3005.2
Masonry chimney R1003.17

CLEARANCE
Above cooking top M1901.1
For appliances M1306.1
For chimneys R1003.18
Reduction methods M1306.2
Vent connector M1803.3.4

CLEARANCES
Around electrical equipment E3405.1, E3604.1, E3604.2, E3604.3

CLOTHES CLOSETS
Lighting fixtures E4003.12

CLOTHES DRYERS . . . . . M1502, Chapter 24

CLOTHES WASHING MACHINES P2718

COLUMNS R407

COMBUSTIBLE
Materials R202

COMBUSTION AIR
Air . . . . . Chapter 17
Definition R202

COMMON VENT
Definition R202
Requirements M1801.11

CONCRETE
Compressive Strength R402.2
Floors (on ground) R506
Tile (roof) R905.3
Weathering . . . . . Figure R301.2(3), R402.2

CONCRETE-ENCASED ELECTRODE E3608.1.2

CONDUCTOR E3406
Ampacity E3705.1
Definition E3501
Identification E3407
Insulation E3406.5
Material E3406.2
Parallel E3406.6
Size E3406.3, E3704.1
Ungrounded E3603.1

CONDUIT BODY
Definition E3501

CONNECTION
Access to connections P2704
For fuel-burning appliances . . . . . Chapter 24
For fuel-oil piping M2202
Joints P2904
Plumbing fixture P2601.2
To water supply P2902.1

CONNECTIONS
Aluminum E3406.8
Device E3406.11.2

CONNECTOR
Chimney and vent M1803
Vent, definition R202

CONNECTOR, PRESSURE (SOLDERLESS)
Definition E3501

CONSTRUCTION
Cavity wall masonry R608
Flood-resistant R322
Floors . . . . . Chapter 5
Footings R403
Foundation material R402
Foundation walls R404
Foundations . . . . . Chapter 4
Masonry R606, R607, R608, R610
Roofs . . . . . Chapter 8
Steel framing R505, R603, R804
Wood framing R502, R602, R802
Walls . . . . . Chapter 6

CONTINUOUS LOAD
Definition E3501

CONTINUOUS WASTE
Definition R202

CONTROL
Devices . . . . . Chapter 24

CONTROLS
For forced-air furnaces . . . . . Chapter 24

COOKING UNIT, COUNTER-MOUNTED
Definition E3501

COOLING
Absorption cooling equipment M1412
Access to equipment M1401.2
Evaporative cooling equipment M1413
Installation M1401.1

Refrigeration cooling equipment M1404
Return air-supply source M1602
COPPER-CLAD ALUMINUM CONDUCTORS
Definition E3501
CORDS
Flexible E4101.3, E4202.2
CORROSION
Protection of metallic piping P2603.3
COURT
Definition R202
COVER REQUIREMENTS E3803.1
COVERING
Exterior R703
Interior R702
Roof . . . . . Chapter 9
Wall . . . . . Chapter 7
CRAWL SPACE R408
CRITERIA
Design R301
CROSS CONNECTION
Definition R202

D

DAMPER, VOLUME
Definition R202
DECAY
Protection against R317
DECK
Supported by exterior wall R507
Wood/plastic composite boards R507.3
DECORATIVE APPLIANCES
Outdoor G2454
Vented . . . . . Chapter 24
DEFINITIONS
Building R202
Electrical E3501
Mechanical system R202
Plumbing R202
DESIGN
Criteria R301
DIRECTIONAL
Fittings, plumbing P2707
DISCONNECTING MEANS
Definition E3501
DISHWASHING MACHINES P2717
DOORS
Egress R311.2
Exterior R311.3.2, R609
DRAFT HOOD
Definition R202
DRAFTSTOPPING R302.12, R502.12
DRAIN
Floor P2719
Shower receptors P2709
DRAINAGE
Cleanouts P3005.2
Foundation R405
Inspection and tests P2503
Storm drainage . . . . . Chapter 33
DRILLING AND NOTCHING (see NOTCHING)
DRINKING WATER TREATMENT P2909
DRIP LOOPS E3605.9.5
DRYERS
Domestic clothes M1502
DUCTS . . . . . Chapter 16
Installation M1601.4
Insulation N1103.2, M1601.3
Material M1601
System, definition R202
DWELLING
Definition R202, E3501
DWELLING UNIT
Definition R202, E3501
Separation R302.2, R302.3

E

EJECTORS (see SUMPS AND EJECTORS)
ELECTRICAL
Appliance (labeling) M1303
Inspection E3403
Vehicle charging E3702.13
ELECTRICAL METALLIC TUBING . . . . Table E3904.6
ELECTRICAL NONMETALLIC TUBING . . . . . Table E3904.6
ELECTRICAL RESISTANCE HEATERS
Baseboard convectors M1405
Duct heaters M1407
Radiant heating M1406
ELECTRODES
Grounding E3608
EMERGENCY ESCAPE R202, R310
ENCLOSURE
Definition E3501
ENERGY CONSERVATION . . . . . Chapter 11
ENTRY R104.6
EQUIPMENT
Definition applied to electrical equipment E3501
General, mechanical . . . . . Chapter 14

3358

Heating and cooling . . . . . Chapter 14
EXCAVATIONS
For appliance installation M1305.1.4.2
EXISTING PLUMBING SYSTEMS P2502
EXTERIOR
Covering R703
Insulation finish systems. R703.9
Lath. R703.7.1
Plaster R703.7
EXTERIOR WALL
Construction R302.1
Definition. R202
Fire-resistance rating R302.1

F

FACEPLATES. E4001.11, E4002.4
FACTORY BUILT
Chimneys R1005, M1805
Fireplace stoves R1005.3
Fireplaces. R1004
FASTENING . . . . . Table R602.3(1)
FAUCETS P2701
FAUCETS
Handle orientation P2722.2
Requirements P2701
FEEDER
Ampacity. E3704.5
Conductor size E3704.1
Feeder neutral load E3704.3
Loads E3704.2
Requirements E3704
FENESTRATION
Definition. R202
FINISHES
Flame spread and smoke density. R302.9
For ceilings R805
Interior R302.9, R315, R702
FIRE-RESISTANT CONSTRUCTION. R302
FIRE SPRINKLER SYSTEM
Inspections of P2904.8
Sizing of P2904.6
Sprinkler location P2904.1.1
FIREBLOCKING
Barrier between stories. R302.11, R602.8
Chimney R1003.19
Fireplace. R1001.12
FIREPLACES . . . . . Chapter 10
Clearance R1001.11
Corbeling R1001.8
Factory-built R1004
Fireblocking. R1001.12
Walls R1001.5
FITTING
Definition applied to electrical installations E3501
FITTINGS
DWV piping. P3002.3
Prohibited joints P3003.2
Water supply. P2906.6
FIXTURE UNIT
Drainage, definition. R202
Unit valves P2903.9.3
Water supply, definition. R202
FIXTURES
Plumbing fixture, definition R202
Plumbing fixture, general . . . . . Chapter 27
Trap seals P3201.2
FLAME SPREAD INDEX. R302.9, R302.10
FLASHING. R703.8.5, R703.4, R903.2, R905
FLEXIBLE CORDS E3909, E4101.3, E4202.2
FLEXIBLE METAL CONDUIT. . . . E3801.1, E3908.8.1
FLOOD HAZARD AREA
Construction R322
Plumbing systems. P2601.3
FLOOR DRAIN P2719
FLOOR FURNACE M1408
FLOORS
Concrete (on ground) R506
Steel framing. R505
Treated-wood (on ground) R504
Wood framing R502
FLUE
Area R1003.14, R1003.15
Lining R1003.11, R1003.12
Multiple R1003.13
FOAM PLASTICS R316
FOOD-WASTE DISPOSERS
General P2716
Discharge connection to sink tailpiece P2707.1
FOOTINGS
Excavation for piping near P2604.4
Requirements R403
FORCED MAIN SEWER
Materials P3002.2
Testing P2503.4
FOOTINGS R403
FOUNDATIONS. . . . . Chapter 4
Cripple walls R602.9, R602.10.9, R602.11.2
Frost protection. R403.1.4.1
Inspection R109.1.1
Walls R404

FRAME
Inspection R109.1.4
FREEZE PROTECTION OF PLUMBING P2603.6
FUEL-BURNING APPLIANCES (see APPLIANCE, definition)
Identification. . . . . Chapter 24
FUEL GAS . . . . . Chapter 24
FUEL OIL
Oil tanks. M2201
Piping, fittings and connections M2202
Pumps and valves M2204
FURNACES
Clearance of warm-air furnaces. M1402.2
Exterior M1401.4
Floor (see Floor Furnace)
Wall (see Wall Furnace)
Warm-air . . . . . M1402, Chapter 24
FUSES E3705.6

G

GARAGES R309
GAS
Appliance labeling . . . . . Chapter 24
GAS PIPING SYSTEM NOT TO BE USED AS GROUNDING ELECTRODE. . . . . Chapter 24
GIRDERS R502.5
GLAZING R308
Aggregate R303.1
Protection of openings R301.2.1.2
GRADE
Definition R202
Of lumber. R502.1.1, R602.1.1, R802.1.1
Plane, definition R202
Slope of piping, definition. R202
GRAYWATER
For subsurface irrigation P3009
Identification for P2901.2
Supply to fixtures P2901.1
GROUND
Definition of electrical. E3501
Floors (on ground) R504, R506
Joint connection. P2906.8
GROUND-FAULT CIRCUIT-INTERRUPTER PROTECTION. E3902, E4203, E4206, E4207.2, E4208
GROUND SOURCE HEAT PUMP M2105
GROUNDED
Definition E3501
GROUNDED CONDUCTOR
Definition E3501
Identification. E3407
GROUNDED, EFFECTIVELY
Definition E3501
GROUNDING
Effective grounding path E3611.3
Of equipment E3908, E4205.1
GROUNDING CONDUCTOR
Definition E3501
Equipment E3501, E3607.3.1, E3908
GROUNDING ELECTRODE CONDUCTOR E3607.4
Connection. E3607.2, E3611
Definition E3501
Size E3603.4
GROUNDING ELECTRODE SYSTEM. E3608
GROUNDING ELECTRODES E3608, E3608.1
Resistance of E3608
GUARDED
Definition applied to electrical equipment E3501
GUARDING OF ENERGIZED PARTS E3404.9
GUARDS. R312
Definition R202
GYPSUM
Wallboard. R702.3

H

HABITABLE SPACE
Definition R202
HALLWAYS R311.6
HANDRAILS R311.7.8, R311.8.3
Definition R202
HAND SHOWER (see SHOWER)
HEADERS
SIP R610.10
Steel. R603.6
Wood R602.7
HEARTH R1001.9
Extension R1001.9, R1001.10
HEATERS
Baseboard M1405
Central furnaces. M1402
Duct M1407
Heat pumps M1403
Masonry R1002
Pool . . . . . M2006, Chapter 24
Radiant. M1406
Sauna. . . . . Chapter 24
Unvented G2445
Vented room. . . . . M1410, Chapter 24
Water . . . . . Chapter 20, Chapter 28

3360

HEATING R303.9
HEATING EQUIPMENT . . . . . Chapter 14
HEIGHT
Ceiling R305
HOLLOW-UNIT MASONRY (see MASONRY) R606.3.2.2, 606.13.1.2
HORIZONTAL
Pipe, definition R202
Vent length M1803.3.2
HOT TUBS . . . . . E4201, Appendix G
HOT WATER
Definition R202
Distribution pipe rating P2906.5
Distribution systems P2905
Heaters . . . . . M2005, Chapter 24
Supplied to bathtubs P2713
Temperature actuated valves for P2724
HUB DRAIN (See WASTE RECEPTOR)
HYDROGEN GENERATING AND REFUELING M1307.4
HYDRONIC HEATING SYSTEMS
Baseboard convectors M2102
Boilers M2001
Expansion tanks M2003
Floor heating systems M2103
Operating and safety controls M2002
Piping systems installation M2101

I

IDENTIFIED
Definition applied to electrical equipment E3501
INDIVIDUAL
Branch circuit, definition E3501
Sewage disposal systems R202, P2602
Water supply and sewage disposal systems P2602
INLET
To masonry chimneys R1003.16
INLINE SANITARY WASTE VALVE P3101.2.1, P3201.6.1
INSPECTION
Card AE305.3
Excavation for piping P2604.1
Fuel-supply system . . . . . Chapter 24
Of plumbing system P2503
On site R109.1
INSTALLATION
Existing . . . . . Appendix J
Of appliances M1307
Of cooling and heating equipment M1401.1
Of ducts M1601.4
Of flue liners R1003.12
Of plumbing fixtures P2705
Of wall furnaces M1409.3
INSULATION R302.10
INTERIOR
Lath R702.2.3
Other finishes R702.5
Plaster R702.2
Wall covering . . . . . Chapter 7
INTERMEDIATE METAL CONDUIT . . . E3801, E3904
INTERRUPTING RATING E3404.2
Definition E3501
IRRIGATION (see SUBSURFACE IRRIGATION)

J

JOINTS, PIPE
And connections P2906, P3003
Slip P2704.1, P3005.2.9
JOIST
Bearing R502.6, R606.6.3.1
JUMPERS
Bonding E3609
JUNCTION BOXES E3905, E4206.9.1

K

KITCHEN
Definition R202
KITCHEN RECEPTACLES E3703.2, E3901

L

L VENT TERMINATION M1804.2.4
LABELED
Definition R202
Definition applied to electrical equipment E3501
LABELING
Appliances M1303
Definition R202
LAMPHOLDERS E4003, E4004
LANDINGS R311.3, R311.3.1, R311.7.6, R311.8.2
LATERAL SUPPORT . . . R502.7, R606.6.4, R607.5.2
LATH
Exterior R703.7.1
Interior R702.2.3
LAUNDRY CIRCUIT E3703.3
LAUNDRY TUBS
Drain connection to standpipe P2706.1.2.1
Requirements P2715

LAVATORIES P2711
Clearances R307
Waste outlets P2711.3
LEAD
Allowable amount, potable water components P2906.2
Bends and traps P3002.4.2
Caulked joints P3003.6.1
Flashing P3002.4.1
LIABILITY R104.8
LIGHT, VENTILATION AND HEATING R303
LIGHTING
Luminaire in clothes closets E4003.12
Luminaire installation E4004
Luminaries E4003, E4004, E4206
LIGHTING OUTLETS
Definition E3501
Required lighting outlets E3903
LINING
Flue R1003.11, R1003.12
LINTEL R606.10, R608.8, R703.8.3, R1001.7
LIQUID-TIGHT FLEXIBLE CONDUIT E3801.4, E3908.8.2
LISTED
Definition applied to electrical equipment E3501
LISTED AND LISTING
Definition applied to building and mechanical provisions R202
Mechanical appliances M1302.1
Potable water components P2609
LOAD
Additional R1003.8
Roof R301.6
Seismic risk map . . . . . Figure R301.2(2)
Snow load map . . . . . Figure R301.2(5)
Wind speed map . . . . . Figure R301.2(4)A
LOADS
Branch circuit loads E3702, E3703.6
Dead load R301.4
Feeder load E3704.2
Feeder neutral load E3704.3
Horizontal load AE602.1
Live load R301.5
Service load E3602.2
LOADS, LIVE AND DEAD
Definition R202
LOCATION
Of furnaces M1408.3, M1409.2
LOCATION (DAMP) (DRY) (WET)
Definitions E3501
LUMBER
Grade R502.1.1, R602.1.1, R802.1.1
LUMINAIRE E4004
Clearances E4004.8

M

MACERATING TOILET P2723
MAKEUP AIR M1503.4
MANUFACTURED HOME
Definition R202
Provisions . . . . . Appendix E
MASONRY
Anchorage R606.11
Cavity wall R606.13
Chases R606.8
General R606
Hollow unit R202, R606.3.2.2, R606.13.1.2
Inspection R109.1.4
Seismic requirements R606.12
Solid, definition R202
Veneer R703.8
Veneer attachment R703.3
MATERIALS
Alternative R104.11
Combustible R202, R1001.11, R1001.12, R1003.18, R1003.19
For ducts M1601
For fixture accessories P2702
For flue liners R1003.11
For fuel-supply systems . . . . . Chapter 24
For hearth extension R1001.9
For siding R703.5
Hydronic pipe M2101, M2103, M2104
Plumbing pipe P2906, P3002
MECHANICAL
Inspection R109.1.2
System requirements . . . . . Chapter 13
MEDIUM PRESSURE FUEL-GAS PIPING SYSTEM . . . . . Chapter 24
MEMBRANE
Penetration R302.4.2
Polyethylene R504.2.2, R506.2.3
Water-resistive R703.2
Waterproofing R406.2
METAL
Ducts . . . . . Chapter 16
Roof panels R905.10
Roof shingles R905.4
METAL-CLAD CABLE . . . . . Table E3701.2
METHODS
Water distribution pipe sizing . . . . . Appendix P
MODIFICATIONS R104.10

3362

MOISTURE CONTROL R702.7
MORTAR
Joints R606.3.1
MOTORS
Motor branch circuits E3702.6, E3702.7
MULTIPLE
Appliance venting systems M1801.11
Flues R1003.13
MULTIWIRE BRANCH CIRCUITS E3701.5

N

NONCOMBUSTIBLE MATERIAL
Definition R202
NONMETALLIC BOXES E3905.3, E3908.16
NONMETALLIC RIGID CONDUIT E3801.4
NONMETALLIC-SHEATHED CABLE E3705.4.4, E3801.4, E3905.3.1, E3908.8.3
NONPOTABLE WATER SYSTEMS . . . P2910, P2911, P2912, P2913
NOTCHING
Electrical E3402.1
For mechanical systems M1308
For plumbing piping P2603.2
Steel joists R505.2.5, R505.3.5, R804.2.5, R804.3.3
Steel studs R603.2.6, R603.3.4
Wood joists R502.8, R802.7.1
Wood studs R602.6
Wood top plates R602.6.1

O

OCCUPIED SPACE
Definition R202
OIL
Piping and connections M2202
Supply pumps and valves M2204
Tanks M2201
OPEN-TOP GAS BROILER UNITS M1505.1
OPENING
Requirements, combustion air . . . . . Chapter 17, Chapter 24
Waterproofing of piping penetrations P2606.1
OUTLET
Definition . . . . . Chapter 24, E3501
OVEN, WALL-MOUNTED
Definition applied to electrical provisions E3501
OVERCURRENT
Definition E3501
OVERCURRENT PROTECTION E3705
OVERCURRENT-PROTECTION RATING E3705
OVERLOAD
Definition E3501

P

PANELBOARD
Definition E3501
PANELBOARDS E3706
Clearance and dedicated space E3405.2, E3405.3
Headroom E3405.3
PARALLEL PATH CONNECTION N1102.2.6 (R402.2.6)
PARAPETS R302.2.2, R606.4.4
PARTICLEBOARD
Floor R503.3
Walls R605
PERMITS R105
PIERS R606.7
Masonry R404.1.9
PIPE
Fittings P2702.2
Materials listing . . . . . Table M2101.1, P2609
Protection P2603
Standards, drain, waste and vent . . . . . Table P3002.1(1), Table P3002.1(2)
Standards, sewer . . . . . Table P3002.2
Standards, water supply P2906
PIPING
Connections and materials . . . Table M2101.1, P2905
Drain, waste and vent P3002.1
Excavations next to footings P2604.4
Fuel-gas size determination . . . . . Chapter 24
Penetrations P2606
Protection P2603
Sizing methods, water distribution P2903.7
Support . . . . . M2101.9, Chapter 24, P2605
PLANNING
Building . . . . . Chapter 3
PLANS R106
PLASTER
Exterior R703.7
Interior R702.2
PLENUM
Definition R202
Definition, electrical installations E3501
PLUMBING
Fixture clearances R307
Fixtures . . . . . Chapter 27
Inspection R109.1.2

Materials P2702.2, P2905, P3002
Requirements and definitions R202
System, definition R202
Third-party certification P2609.4
Traps . . . . . Chapter 32
Vents . . . . . Chapter 31
PLYWOOD
Application R703.5
Materials, walls R604
POTABLE WATER
Definition R202
Piping listing. P2609.4
PRECAST CONCRETE
Footings R403.4
Foundation material R402.3.1
Foundation walls R404.5
PRESSURE, WATER SUPPLY
Maximum P2903.3.1
Minimum P2903.3
PRIVATE
Sewage disposal system . . . . . Appendix I
PROHIBITED
Receptors P2706.3
Return air sources M1602.2
Traps P3201.5
Valves below grade P2903.9.5
Water closets P2712.1
PROTECTION
Against decay and termites R319, R320
Against radon. . . . . Appendix F
Of backflow preventers P2902.6
Of ferrous gas piping . . . . . Chapter 24
Of potable water supply P2902
PURLINS R802.5.1
PURPOSE. R101.3

R

***R*-VALUE**
Definition R202
RACEWAY
Definition E3501
Raceway installations E3904
Raceway seals. E3601.5, E3803.6
Raceways as means of support. E3904.4
RADON
Map . . . . . Appendix F
RAFTERS
Grade of lumber. R802.1
Spans. R802.1.1,
Tables R802.5.1(1) – R802.5.1(8)
RAIN TIGHT
Definition applied to electrical
provisions E3501
RAINPROOF
Definition applied to electrical
provisions E3501
RAINWATER
Identification for P2901.2
Supply to fixtures P2901.1
RAMPS R311.8
RANGES
Branch circuits for ranges E3702.9
RANGES AND OVENS
Vertical clearance above cooking top M1901.1
READILY ACCESSIBLE
Definition R202
Definition, electrical installations E3501
RECEPTACLE
Definition E3501
RECEPTACLE OUTLET
Definition E3501
Required outlets. E3901
RECEPTACLES
Rating, type and installation. E4002
RECEPTORS
Plumbing fixtures and traps . . . . . Chapter 27
Site-built materials P2709.2
Waste. P2706
RECESSED LUMINAIRES E4003.5, E4003.12,
E4004.8, E4004.9
RECLAIMED WATER
Identification for P2901.2
Supply to fixtures P2901.1
REQUIREMENTS
Connections for fuel-burning
appliances. . . . . Chapter 24
Return air M1602
RESISTANCE TO GROUND
Electrodes E3608.4
RESISTANT SIDING MATERIAL (see MATERIALS)
RETURN-AIR M1602
RIDGE BOARD. R802.3
RIGID METALLIC CONDUIT E3908
RIGID NONMETALLIC CONDUIT E3801.4
ROOF
Coverings. R905
Drainage. R903.4
Flashing R703.4, R903.2, R905
Steel framing R804
Wood framing. R802

ROOF-CEILING CONSTRUCTION (see CONSTRUCTION) . . . . . Chapter 8
Wind uplift R802.11, R804.3.8
ROOFING
Built-up R905.9
Liquid-applied coating R905.15
Modified bitumen R905.11
Sprayed polyurethane foam R905.14
Thermoplastic single-ply R905.13
Thermoset single-ply R905.12
ROOM
Heaters, vented . . . . . M1410, Chapter 24
Minimum Sizes R304

S

SANITATION R306
SEISMIC RISK MAP . . . . . Figure R301.2(2)
SEPTIC TANK
Definition R202
SERVICE
Definition E3501
SERVICE CABLE
Definition E3501
SERVICE CONDUCTORS
Definition E3501
Drip loops E3605.9.5
Insulation E3605.1
Overload protection E3603.3
Rating of ungrounded service conductors E3602.1
Size E3603.1
SERVICE DISCONNECT
Location E3601.6.2
Marking of E3601.6.1
Maximum number of E3601.7
Rating of E3602.3
Required E3601.6
SERVICE DROP
Clearances E3604.1, E3604.2
Definition E3501
Point of attachment E3604.3
SERVICE-ENTRANCE CONDUCTORS, OVERHEAD SYSTEM
Definition E3501
SERVICE-ENTRANCE CONDUCTORS, UNDERGOUND SYSTEM
Definition E3501
SERVICE EQUIPMENT
Definition E3501
SERVICE LATERAL
Definition E3501
SERVICE LOAD E3602.2
SERVICE POINT
Definition E3501
SERVICE VOLTAGE RATING E3602.4
SERVICES . . . . . Chapter 36
SEWAGE
Disposal, private P2602
SEWER, BUILDING
Definition R202
Separation from water service . . P2604.2, P2906.4.1
Size P3005.4.2
Testing P2503.4
SHAKES
Wood R702.6, R703.6, R905.8
SHINGLE
Asphalt shingles R905.2
Metal R905.4
Slate R905.6
Wood R905.7
SHOWER
Control valve P2708.4
Control valve riser to shower head P2708.3
Compartment R307.2
Drain size P2708.2
Hand P2708.5
Receptor P2709
Stall dimensions P2708
Walls P2710
SHUTOFF VALVE (see VALVES)
SIDING
Exterior coverings R703
SINKS P2714
SITE
Address R319
Preparation R408.5, R504.2, R506.2
SIZE
Of combustion air openings . . . . . Chapter 17
Of rooms R304
Of trap P3201.7
SIZING METHODS
Water piping P2903.7
SKYLIGHTS R308.6
SLATE SHINGLES R905.6
SMOKE ALARMS R314
SMOKE-DEVELOPED INDEX R302.9, R302.10
SNOW LOAD MAP . . . . . Figure R301.2(5)
SOLAR ENERGY SYSTEMS M2301
SPANS
Steel (allowable) R505.3.2, R804.3.2.1
Wood (allowable) R502.3, R802.5
SPAS E4208

SPLICES E3406.11
SPLICES AND TAPS E3803.4
SPRINKLER (see FIRE SPRINKLER SYSTEMS)
STAIRWAYS R311.7
STANDARDS . . . . . Chapter 44, Appendix G
STANDPIPE (see WASTE RECEPTOR)
STEEL
Fireplace units R1001.5.1
Floor construction R505
Roof-ceiling construction R804
Walls R603
STORM SHELTERS R323
STORY
Definition R202
STOVES
Factory-built fireplace M1414
STRUCTURAL AND PIPING PROTECTION . . . P2603
STRUCTURAL INSULATED PANEL (SIP) R610
STUDS
Wood R602.2, R602.3
Spacing R602.3.1
Steel R603.2, R603.3
SUBSURFACE IRRIGATION SYSTEMS P3009
SUMPS AND EJECTORS P3007
SUMP PUMPS P3007.3.2, P3303
SUPPLY
Combustion air . . . . . Chapter 17, Chapter 24
Fuel systems . . . . . Chapter 24
Oil supply pumps and valves M2204
Required gas . . . . . Chapter 24
Return air M1602
Water . . . . . Chapter 29
SUPPORT
Of decks R507.2.2.1
Of ducts M1601.4.4
Of floor joists R502.6, R505.3.2
Of masonry chimneys R1003.2, R1003.3, R1003.4
Of pipe . . . . . M2101.9, Chapter 24, P2605
SUPPORT REQUIREMENTS FOR WIRING METHODS E3802.1
SWIMMING POOLS . . . . . Chapter 42, Appendix G
SWITCHES
Definition E3501
Rating and application E4001
SYSTEMS
Mechanical venting . . . . . Chapter 18, Chapter 24
Plumbing, drainage, waste and venting . . . . . Chapter 25, Chapter 30, Chapter 31, Chapter 33

T

TAIL PIECES, PLUMBING FIXTURE P2703
TANK
For fuel oil-burning appliances M2201
Septic, definition R202
TEMPERATURE ISOLINES . . . . . Figure R301.2(1)
TEMPERATURE LIMITATIONS E3705.4
TERMINALS E3406.10
TERMINATION
Of chimneys R1003.9
Of vents (general) M1804.2
TERMITES
Infestation probability map . . . . . Figure R301.2(6)
Protection R318
TEST
For leaks in supply piping . . . . . Chapter 24
Of backflow preventers P2503.8
Of building sewers P2503.4
Of plumbing systems P2503
Of shower liner P2503.6
THICKNESS
Of chimney walls R1003.10
TIES
Veneer R703.8.4
TILE
Shingles (clay and concrete) R905.3
TOWNHOUSE
Definition R202
Scope R101.2
Separation R302.2
TRACK LIGHTING E4005
TRAP . . . . . Chapter 32
Arm, definition R202
Building P3201.1
Seal protection P3201.2.1
TRENCHING AND BACKFILLING P2604
TRUSSES
Steel R505.1.3, R804.3.6
Wood R502.11, R802.10
TYPE OF VENTING SYSTEMS REQUIRED . . . . Chapter 18, Chapter 24

U

***U*-FACTOR**
Definition R202
UNDER FLOOR
Access to furnaces M1305.1.4
Plenums M1601.5
Space R408

UNDERGROUND INSTALLATION REQUIREMENTS
Duct systems M1601.1.2
Electrical cable E3803
Wiring E4203.7
UNVENTED ATTIC ASSEMBLIES R806.5
UTILIZATION EQUIPMENT
Definition E3401

V

VALVES
Backwater P3008
Meter . . . . . Chapter 24
Oil-supply M2204
Relief, water heater P2804
Shutoff, fuel-gas . . . . . Chapter 24
Shutoff, fuel-oil M2204.2
Water heaters P2903.9.2
Water supply P2903.9
VAPOR RETARDERS R702.7
Definition R202
VENEER
Masonry R703.7
VENT
B or BW vent . . . . . Chapter 24
Definition . . . . . Chapter 24
L vent . . . . . M1804.2.4, Chapter 24
Plumbing system, definition R202
Termination M1804.2, M2203.5, P3103.5
VENTED
Decorative appliances . . . . . Chapter 24
Floor furnaces M1408
Room heaters M1410
Wall furnaces M1409
VENTILATION
Bathroom and kitchen M1507
For hydrogen systems M1307.4
Roof R806
Under floor R408.1
Whole house M1507.3
VENTING (MECHANICAL)
Chimney and vent connectors . . . M1803, Chapter 24
Components . . . . . M1802, Chapter 24
General . . . . . M1801, Chapter 24
Required . . . . . M1801, M2203.4, Chapter 24
Systems . . . . . Chapter 18, Chapter 24
VENTING (PLUMBING)
Air admittance valves P3114
Circuit P3110
Combination waste and vent system P3111
Common P3107
Connections and grades P3104
Fixture P3105
Individual P3106
Island fixture P3112
Pipe sizing P3113
Stacks and stack vents P3102
Systems P3101
Terminals P3103
Waste stack P3109
Wet P3108
VERTICAL
Clearances above cooking top M1901.1
Pipe, definition R202
VIOLATIONS
And penalties R113
VOLTAGE
Definition E3501
VOLTAGE RATING (SERVICES) E3602.4
VOLTAGE TO GROUND
Definition E3501
VOLTAGES E3404.1

W

WALL FURNACE (see APPLIANCE)
General M1409.1
Installation M1409.3
Location M1409.2
WALLBOARD
Gypsum R702.3
WALLS
Bathtub compartments P2710
Bracing, steel R603.9
Bracing, wood R602.10
Construction . . . . . Chapter 6
Covering . . . . . Chapter 7
Cripple R602.9
Deflection R301.7
Exterior covering R703
Finishes R302.9, R702
Fireplace R1001.5
Foundation R404
Insulating concrete form R608.3, R608.4, R608.5.3
Shower compartments P2710
Steel framing R603
Structural insulated panels (SIP) R610
Thickness, masonry chimneys R1003.10
Wood framing R602

WARM-AIR FURNACES M1402
Access to M1401.2
Clearance from M1402.2
WASTE
Clear water P2792.1
Continuous, definition R202
WASTE RECEPTOR
Hub drain P2706.1
Standpipe P2706.1
Prohibited types P2706.3
WATER
Distribution system, definition R202
Heater, definition R202
Heaters . . . . . Chapter 20, Chapter 24, Chapter 28
Individual supply and sewage disposal P2602
Piping sizing methods P2903
Pressure P2903.3
Service, separation from
sewer P2604.2, P905.4.1
Supply and distribution . . . . . Chapter 29
Supply system, definition R202
WATER CLOSET
Carriers for wall hung P2702.4
Clearances for R306.1
Dual flushing P2712.1
Personal hygiene devices P2722.5
Seats P2712.7
Standards P2712.1
WATER HEATER
Drain water heater heat recovery units P2903.11
In garages P2801.5.2
Location P2801.3, P2801.4, P2801.5
Pan P2801.5
Plumbing requirements . . . . . Chapter 28
Relief valves P2804
Seismic bracing P2801.7
Solar thermal P2802, P2902.5.5
Thermal expansion from P2903.4
Used for space heating P2803
WATER TIGHT
Definition applied to electrical provisions E3501
WATERPROOFING
And dampproofing R406
Of openings through roofs and walls P2607
WEATHERPROOF
Definition applied to electrical provisions E3501
WELLS (see INDIVIDUAL WATER SUPPLY)
WHIRLPOOL BATHTUBS P2720
WHOLE-HOUSE VENTILATION M1507.3
WIND SPEED MAP . . . . . Figure R301.2(4)A
WINDOW R609
Fall prevention R312.2
Opening limiting devices R312.2.2
WIRING METHODS . . . . . Chapter 37
WOOD
Floor construction R502
Foundation walls R404.2
Roof-ceiling construction R802
Shakes R905.8
Shingles R905.7
Trusses R502.11, R802.10
Walls R602
WORKING SPACE E3606.2
Around electrical equipment E3405.1, E3405.2
WORKMANSHIP, PLUMBING P2608

Y

YARD
Definition R202

INTERNATIONAL CODE COUNCIL®

People Helping People Build a Safer World®

Valuable Guides to Changes in the 2015 I-Codes®

NEW!

FULL COLOR! HUNDREDS OF PHOTOS AND ILLUSTRATIONS!

SIGNIFICANT CHANGES TO THE 2015 INTERNATIONAL CODES®

Practical resources that offer a comprehensive analysis of the critical changes made between the 2012 and 2015 editions of the codes. Authored by ICC code experts, these useful tools are "must-have" guides to the many important changes in the 2015 International Codes.

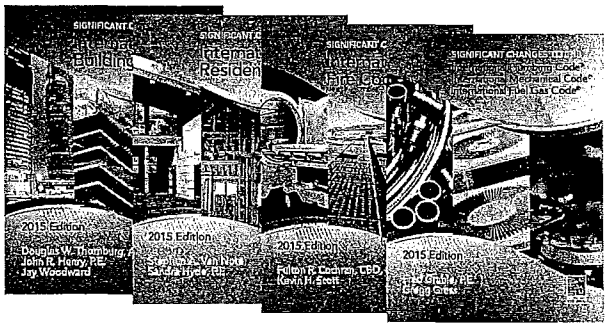

SIGNIFICANT CHANGES TO THE IBC, 2015 EDITION
#7024S15

SIGNIFICANT CHANGES TO THE IRC, 2015 EDITION
#7101S15

SIGNIFICANT CHANGES TO THE IFC, 2015 EDITION
#7404S15

SIGNIFICANT CHANGES TO THE IPC/IMC/IFGC, 2015 EDITION
#7202S15

Changes are identified then followed by in-depth discussion of how the change affects real world application. Photos, tables and illustrations further clarify application.

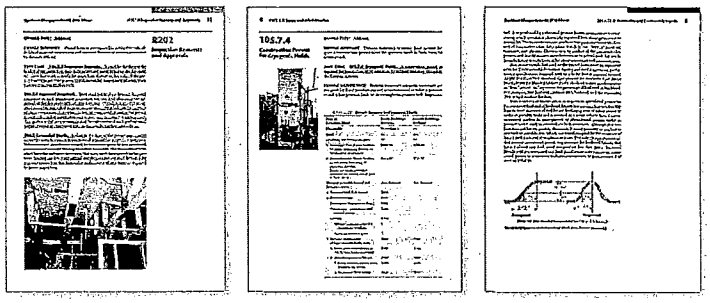

ORDER YOUR HELPFUL GUIDES TODAY!

1-800-786-4452 | www.iccsafe.org/books

HIRE ICC TO TEACH

Want your group to learn the Significant Changes to the I-Codes from an ICC expert instructor? Schedule a seminar today!
email: **ICCTraining@iccsafe.org** | phone: **1-888-422-7233 ext. 33818**

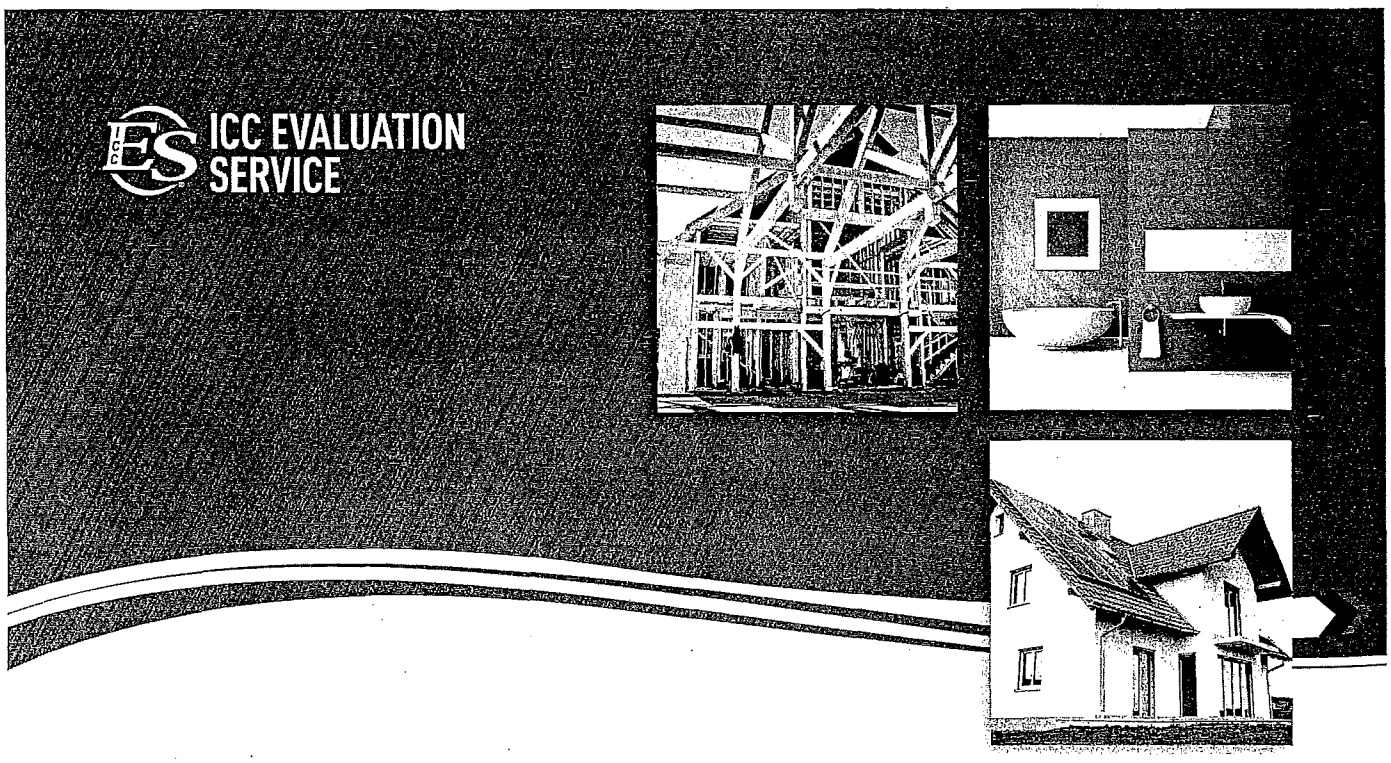

APPROVE WITH

CONFIDENCE

- ICC-ES® Evaluation Reports are the most widely accepted and trusted in the nation.
- ICC-ES is dedicated to providing evaluation reports, PMG and Building Product Listings to the highest quality and technical excellence.
- ICC-ES is a subsidiary of ICC®, the publisher of the IBC®, IRC®, IPC® and other I-Codes®.

We do thorough evaluations. You approve with confidence.

ICC ES · ICC ES PMG · ICC ES LISTED

Look for the ICC-ES marks of conformity before approving for installation

Code Officials — Contact Us With Your Questions About ICC-ES Reports at:
800-423-6587 ext. ES help (374357) or email EShelp@icc-es.org
www.icc-es.org

Subsidiary of ICC INTERNATIONAL CODE COUNCIL®

14-09329

INTERNATIONAL CODE COUNCIL®

People Helping People Build a Safer World®

GET IMMEDIATE DOWNLOADS OF THE STANDARDS YOU NEED

Browse hundreds of industry standards adopted by reference. Available to you 24/7!

Count on ICC for standards from a variety of publishers, including:

ACI	CPSC	GYPSUM
AISC	CSA	HUD
ANSI	DOC	ICC
APA	DOJ	ISO
APSP	DOL	NSF
ASHRAE	DOTn	SMACNA
ASTM	FEMA	USC
AWC	GBI	

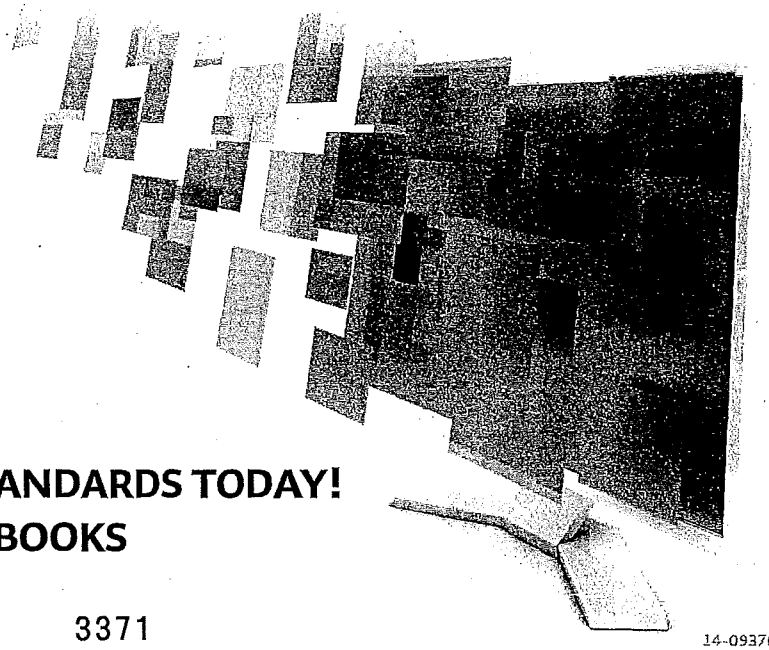

DOWNLOAD YOUR STANDARDS TODAY!
WWW.ICCSAFE.ORG/BOOKS

14-09376

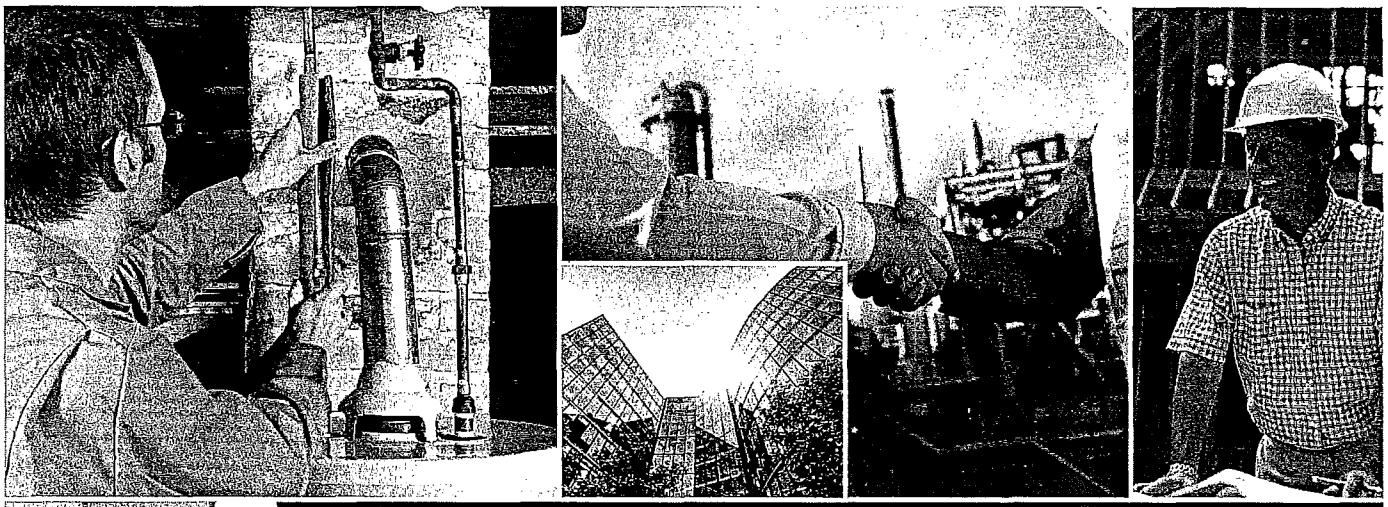

ICC INTERNATIONAL CODE COUNCIL®

People Helping People Build a Safer World®

Growing your career is what ICC Membership is all about

As your building career grows, so does the need to expand your code knowledge and job skills. Whether you're seeking a higher level of certification or professional quality training, Membership in ICC offers the best in I-Code resources and training for growing your building career today and for the future.

- **Learn** new job skills to prepare for a higher level of responsibility within your organization
- **Improve** your code knowledge to keep pace with the latest International Codes (I-Codes)
- **Achieve** additional ICC Certifications to open the door to better job opportunities

Plus, an affordable ICC Membership provides exclusive Member-only benefits including:

- Free code opinions from I-Code experts
- Free I-Code book(s) to new Members*
- Access to employment opportunities in the ICC Career Center
- Discounts on professional training & Certification renewal exams
- Savings of up to 25% off on code books & training materials
- Free benefits - Governmental Members: Your staff can receive free ICC benefits too*
- And much more!

Join the International Code Council (ICC) and start growing your building career now! Visit our Member page at www.iccsafe.org/membership for an application.

*Some restrictions apply. Speak with an ICC Member Services Representative for details.
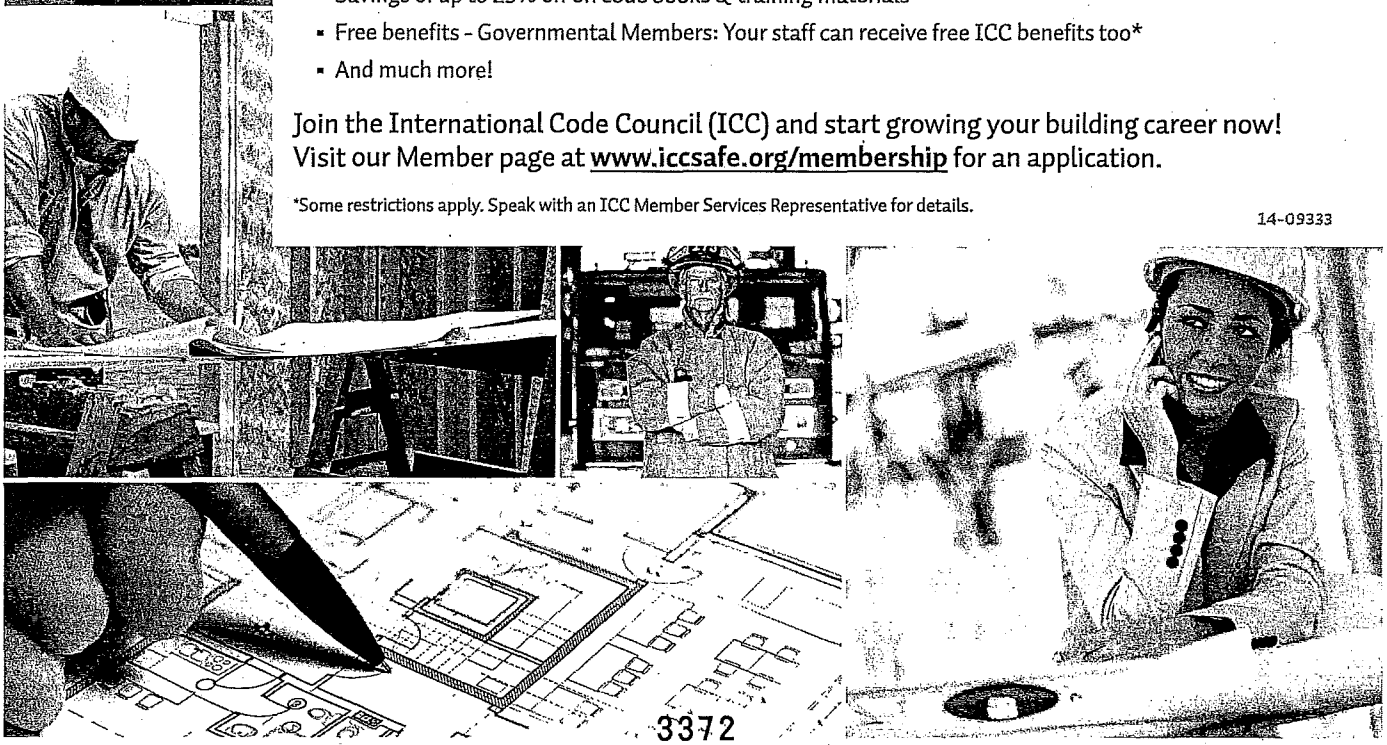
14-09333